NOTICE : WHEN GOVERNMENT DRAWINGS, SPECIFICATIONS, OR OTHER DATA ARE USED FOR ANY PURPOSE OTHER THAN IN CONNECTION WITH A DEFINITELY RELATED GOVERNMENT PROCUREMENT OPERATION, THE UNITED STATES GOVERNMENT THEREBY INCURS NO RESPONSIBILITY NOR ANY OBLIGATION WHATSOEVER; AND THE FACT THAT THE GOVERNMENT MAY HAVE FORMULATED, FURNISHED, OR IN ANY WAY SUPPLIED THE SAID DRAWINGS, SPECIFICATIONS OR OTHER DATA IS NOT TO BE REGARDED BY IMPLICATION OR OTHERWISE AS IN ANY MANNER LICENSING THE HOLDER OR ANY OTHER PERSON OR CORPORATION, OR CONVEYING ANY RIGHTS OR PERMISSION TO MANUFACTURE, USE, OR SELL ANY PATENTED INVENTION THAT MAY IN ANY WAY BE RELATED THERETO.

THE INFORMATION CONTAINED IN THE DOCUMENT IS TECHNICAL IN CONTENT, BUT IS NOT TECHNICAL DATA AS DEFINED BY THE ITAR OR THE EAR, AND SUBJECT TO THE ITAR OR THE EAR MAY NOT BE EXPORTED. THE EXPORT PROHIBITION S/N (EMBARGO) APPLIES TO ALL ITEMS SUBJECT TO THE EAR, I.E., ITEMS ON THE CCL AND WITHIN EAR 99 NLR. YOU MAY NOT MAKE AN EXPORT OR RE-EXPORT CONTRARY TO THE PROVISIONS OF PART 740 (EMBARGOS AND OTHER SPECIAL CONTROLS) OF THE EAR AND 22 CFR PART 126.1 OF THE ITAR.]

ECDR #: 131/5/05

REVISION HISTORY			
REV	DESCRIPTION	DATE	APPROVAL

NOTES:

GENERAL

1A. THIS DRAWING PROVIDES THE PHYSICAL DIMENSIONS AND PARTS LIST FOR PIPE SPOOL ASSEMBLIES. REFER TO PROCUREMENTS SPECIFICATION K0000191096 FOR MATERIAL, TECHNICAL, FABRICATION, TEST AND INSPECTION REQUIREMENTS.

1B. FLEX HOSE REFERENCE DESIGNATOR NUMBER IS 1055.

1C MAKE FROM ASME B16.9, SCHED 10S, 90 DEGREE, LONG RADIUS ELBOW. ELBOW SHALL BE IN ACCORDANCE WITH ASTM A403, CLASS WP-S OR WP-WX AND SHALL BE THE SAME GRADE AS THE PIPING MATERIAL.

1D MAKE FROM ASME B16.5, CLASS 150, LAP JOINT FLANGE BLANK. MATERIAL SHALL BE 316 PER ASTM A182.

1E MAKE FROM NPS 8 SCHED 40S PIPE.

1F MAKE FROM ASME B16.9, SCHED 40S, CONCENTRICALLY SERRATED, LONG PATTERN, LAP JOINT STUB END. MATERIAL SHALL BE 316L PER ASTM A182.

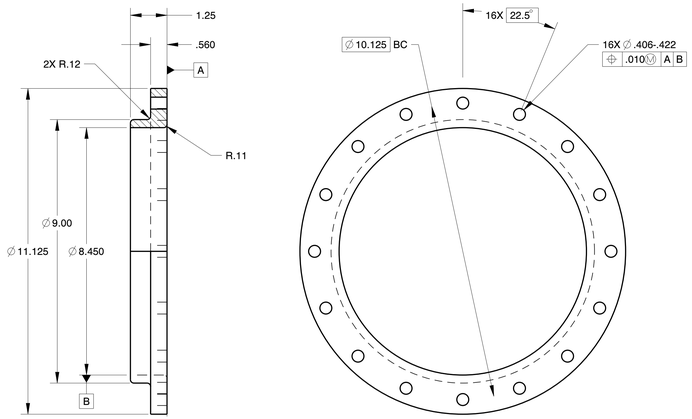

K0000067863-P007
SCALE .500

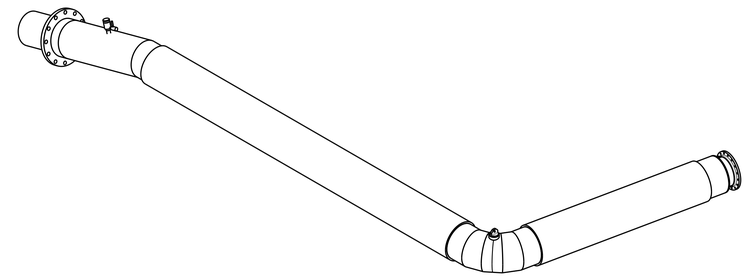

ISOMETRIC
SCALE .063

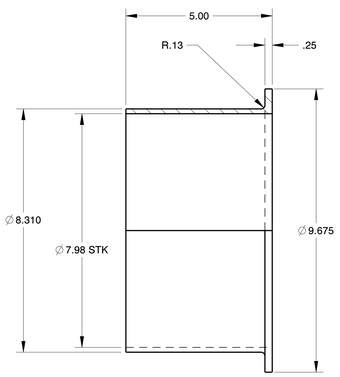

K0000067863-P010
SCALE .500

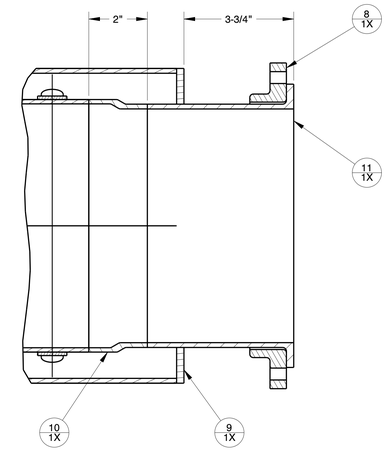

VIEW ROTATED 78.25° CW
SECTION B-B
SCALE .500

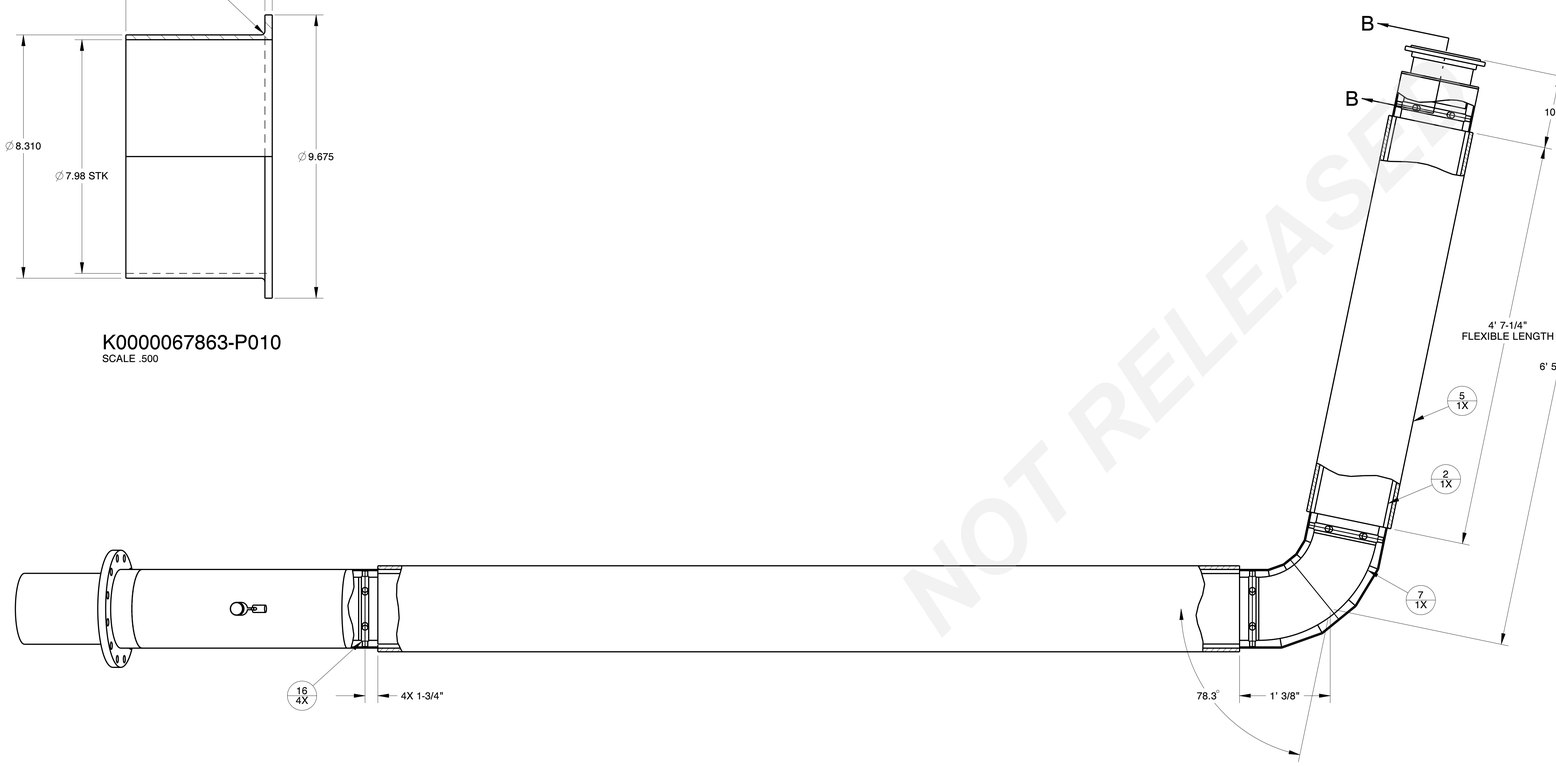

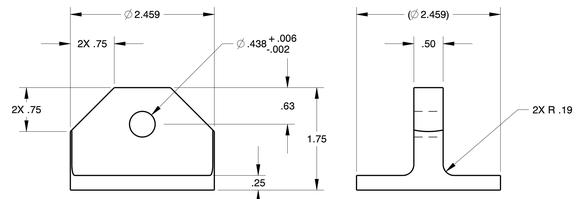

K0000067863-P005
SCALE 1.000

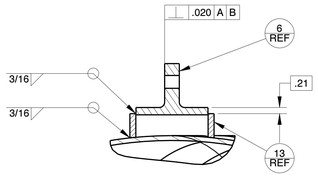

SECTION C-C
SCALE .500

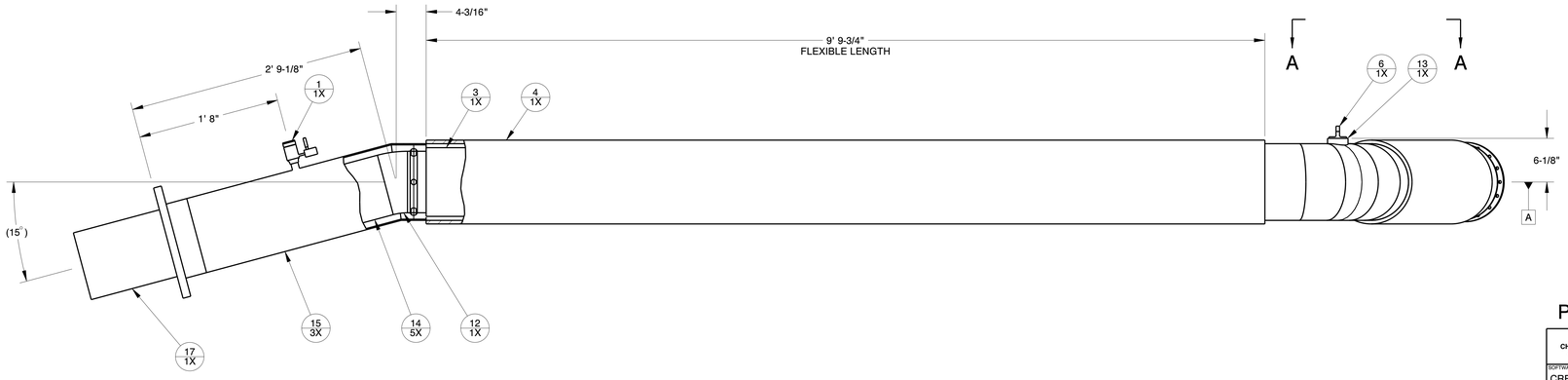

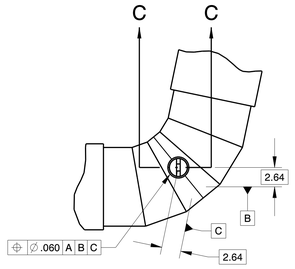

VIEW A-A

QTY	ZONE	FIND NO OR ITEM NO	MFR CODE	PART OR STOCK NO	DESCRIPTION
1		17	22264	KT00389-08D0010D00	BAYONET, MALE, 8X10
4		16	22264	KT00386-08D0010D00	SUPPORT, INTERNAL PIPE
3		15	22264	KT00378-10D00010S2	PIPE, NPS 10, SCHED 10S, 316 SST
5		14	22264	KT00378-08D00010S2	PIPE, NPS 8, SCHED 10S, 316 SST
1		13	22264	KT00378-02D50040S2	PIPE, NPS 2-1/2, SCHED 40S, 316 SST
1		12	22264	KT00100-10SS08D00	ELBOW, 15 DEG, LONG, B16.9, SCHED 10
1F 1		11	22264	K0000067863-P010	STUB END, LAP JOINT
1E 1		10	22264	K0000067863-P009	ADAPTER
1		9	22264	K0000067863-P008	PLATE
1D 1		8	22264	K0000067863-P007	FLANGE, LAP JOINT
1C 1		7	22264	K0000067863-P006	ELBOW, 78.25 DEG
1		6	22264	K0000067863-P005	LUG
1		5	22264	K0000067863-P004	FLEXIBLE HOSE, 10 INCH
1		4	22264	K0000067863-P003	FLEXIBLE HOSE, 10 INCH
1		3	22264	K0000067863-P002	FLEXIBLE HOSE, 8 INCH
1		2	22264	K0000067863-P001	FLEXIBLE HOSE, 8 INCH
1		1	22264	79K14672-3	ASSEMBLY, VACUUM VALVE

PARTS LIST

PROCUREMENT CONTROL DRAWING

CAD MAINTAINED. CHANGES SHALL BE INCORPORATED ONLY BY THE DESIGN ACTIVITY.		
SOFTWARE: CREO PARAMETRIC 2.0		
FILENAME: K0000067863D		
MATERIAL: NONE	K0000067859	SLS ML
HEAT TREATMENT: NONE	NEXT ASSY	USED ON
FINAL PROTECTIVE FINISH: NONE	APPLICATION	

UNLESS OTHERWISE SPECIFIED DIM ARE IN INCHES. INTERPRET DIM AND TOL PER ASME Y14.5-2009. TOLERANCES ON:
FRACTIONS ± 1/16 | DECIMALS 1 PL ±.1, 2 PL ±.03, 3 PL ±.010 | ANGLES ±1°

THIRD ANGLE PROJECTION

ORIGINAL DATE OF DRAWING (YYYY/MM/DD) 2013/05/29

DRAFTSMAN: S. A. BRYANT | CHECKER: J. A. STAGI
ENGINEER: F. B. TRIMBOLI | CHECKER: J. J. TAYLOR
ENGINEER: V. J. WARD | STRESS: T. C. STEVENSON
ENGINEER: E. L. THOMPSON
SUBMITTED: T. O. ADAMS
APPROVED: A. C. LITTLEFIELD

JOHN F. KENNEDY SPACE CENTER, NASA
KENNEDY SPACE CENTER, FLORIDA

FLEX HOSE 8 X 10, VACUUM JACKETED, LIQUID HYDROGEN VENT

SIZE	CAGE CODE	DWG NO	REV
E	22264	K0000067863	-

SCALE .125 | PART WEIGHT 633.92 | SHEET 1 OF 1

NOT RELEASED

K0000067863D (LIQUID HYDROGEN VENT VACUUM JACKETED FLEX HOSE 8X10 DRAWING)

Document Number:	K0000067863D
Version:	-
Name:	LIQUID HYDROGEN VENT VACUUM JACKETED FLEX HOSE 8X10 DRAWING
Type:	Drawing
Container:	SLS-GSDO Cryogenic Delivery Product
State:	Under Review
Modified By:	Stuart Bryant
Modified On:	Wed, Jan 15, 2014 15:47:51 EST
Change Requests:	

Maturity History

Version	State	Promoted By	Promoted On
-.19	Under Review	wcadmin-(Site)	Sat, Mar 8, 2014 08:18:20 EST
-.19	In Work	wcadmin-(Site)	Fri, Mar 7, 2014 15:32:45 EST
-.19	Under Review	wcadmin-(Site)	Mon, Mar 3, 2014 12:55:22 EST
-.19	In Work	Stuart Bryant	Mon, Mar 3, 2014 12:51:08 EST
-.19	Under Review	wcadmin-(Site)	Mon, Mar 3, 2014 11:16:51 EST
-.1	In Work	Daniel Stanifer	Wed, May 29, 2013 15:37:05 EDT

KDDMS Routing History

CN/CT Number	Task	Assignee	Role	Events	Comment	Started	Completed
0 records found							