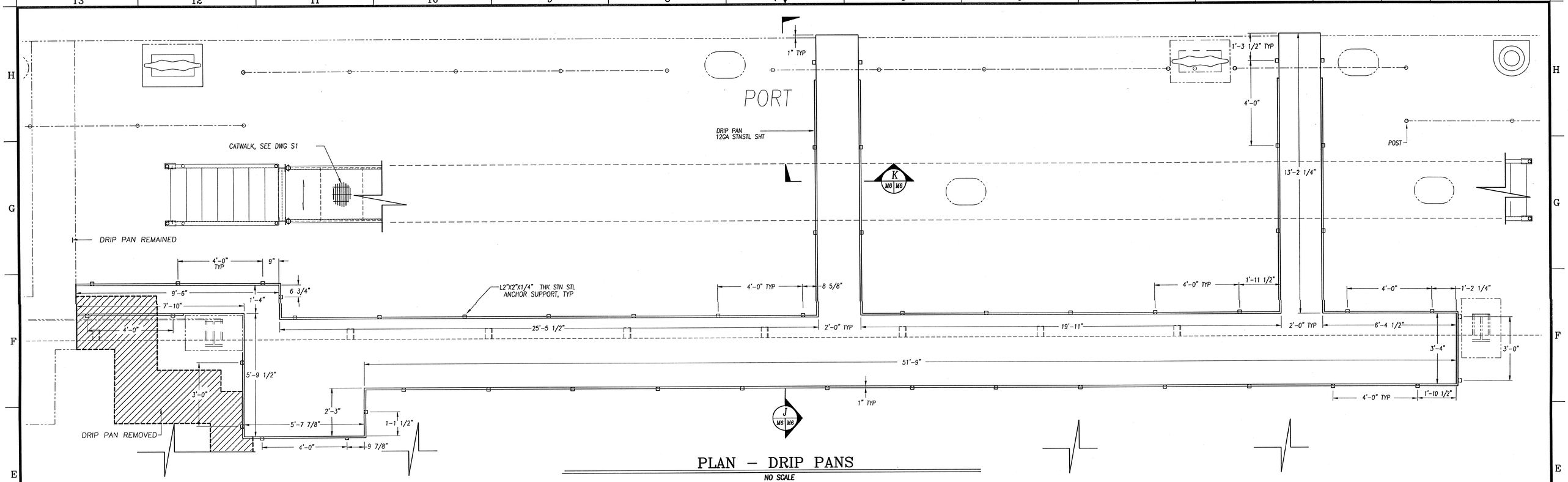

PLAN – DRIP PANS

NO SCALE

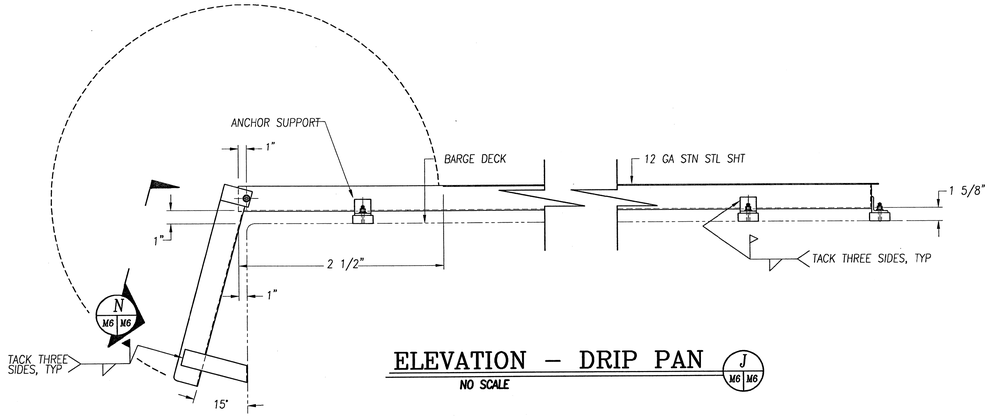

ELEVATION – DRIP PAN

NO SCALE

J M6 M6

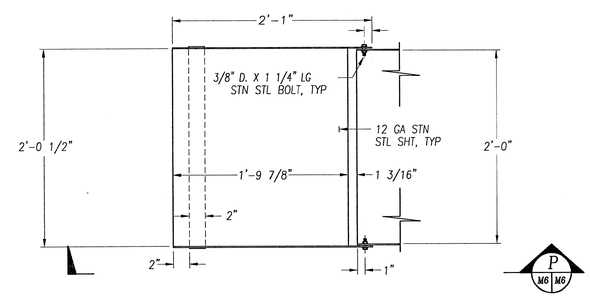

VIEW – TYPICAL

NO SCALE

N M6 M6

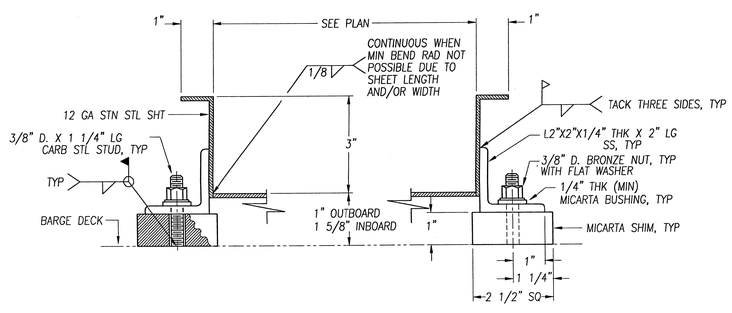

SECTION – DRIP PAN

NO SCALE

K M6 M6

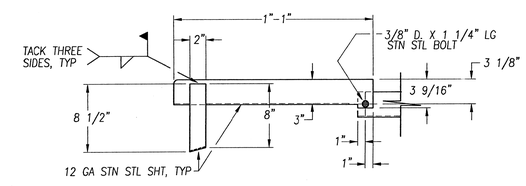

VIEW – TYPICAL

NO SCALE

P M6 M6

FOR REFERENCE ONLY

ISSUED/CEF

SYM	ZONE	DESCRIPTION	DATE	APPROVED
		THIS DRAWING MADE SORD, FORMERLY SWR-J1PR7D9901 DOC. M6. TDB 10/6/05 DMT 10/6/05	JAN 2 3 2006	

REVISIONS

SIGNATURES		DATE
DRAWN	L. ARCENEAUX	2/25/03
CHECKED	V. HATHCOCK	2/26/03
ENGINEER	L. ARCENEAUX	2/25/03
ISSUED	ISSUED/CEF	3/10/03
CONCURRENCE		
SUBMITTED	DAVID ALSTON/K.A.B.	2/27/03
SAFETY	W.R. VANDAGRIFF	3/7/03
APPROVED	M. WILLIS	DATE 3/6/03
USED ON	31B00-D001	

NATIONAL AERONAUTICS AND SPACE ADMINISTRATION

JOHN C. STENNIS SPACE CENTER SSC, MS 39529-6000

MSS Mississippi Space Services

REPLACE LOX BARGES #2 & #6 VAPORIZERS

SPLASH PAN DETAILS

REF NO M6

CADD CONTROLLED DRAWING
CADD P/N: 31B00-M007sht1r0

SIZE F | DWG NO. 31B00-M007 | REV 0

AUTHORITY SWR-J1PR7D9901 | SHEET

0 1 2 3
GRAPHIC SCALE IN INCHES

REF: EMI-J1PR7D9901-M6

EMI GM830RFP00