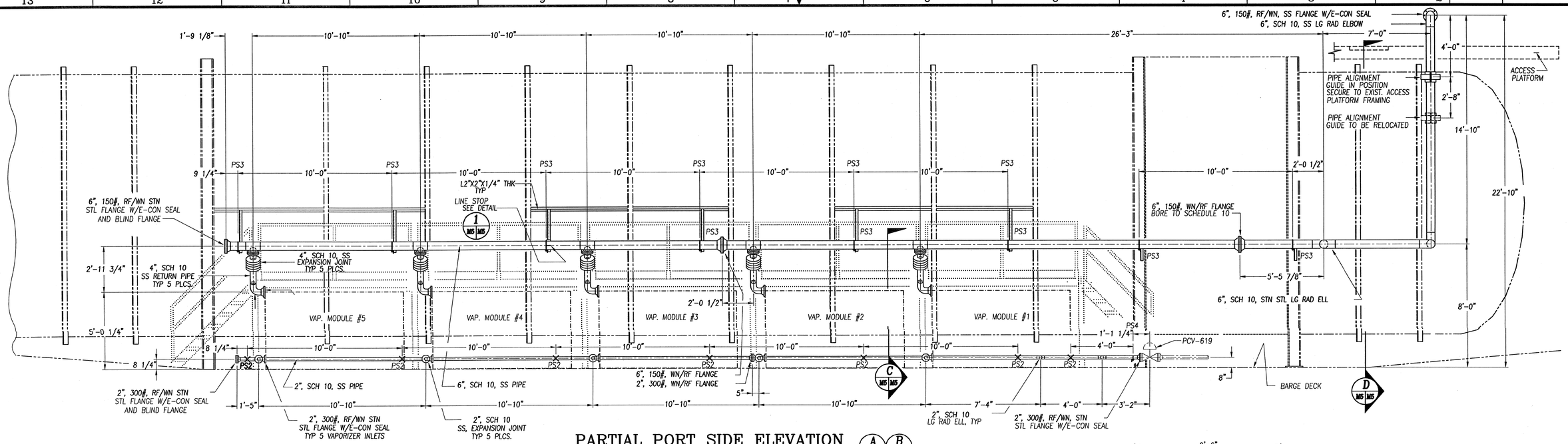

PARTIAL PORT SIDE ELEVATION (A M5 M5 / B M5 M5)

NO SCALE

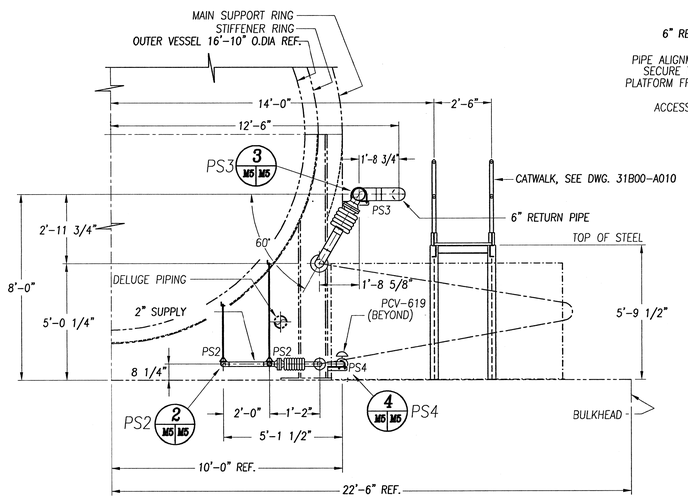

SECTION (C M5 M5)

NO SCALE

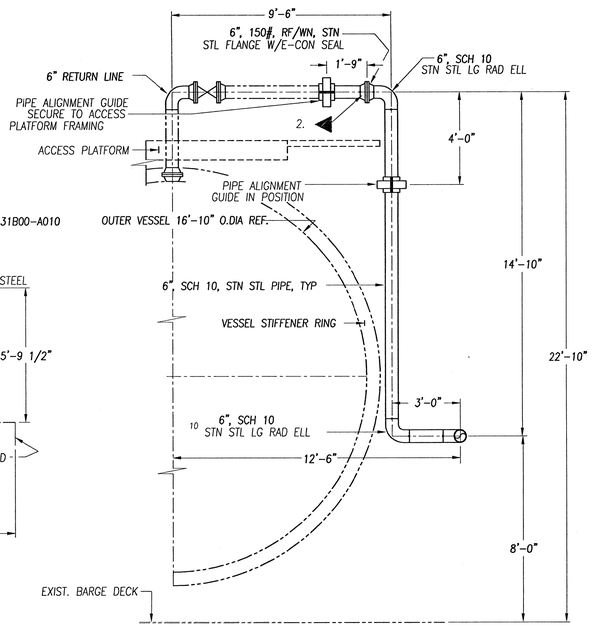

SECTION (D M5 M5)

NO SCALE

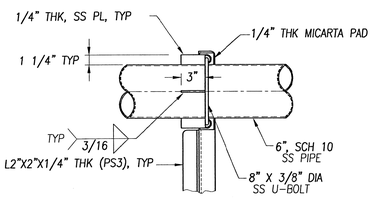

DETAIL – LINE STOP (1 M5 M5)

NO SCALE

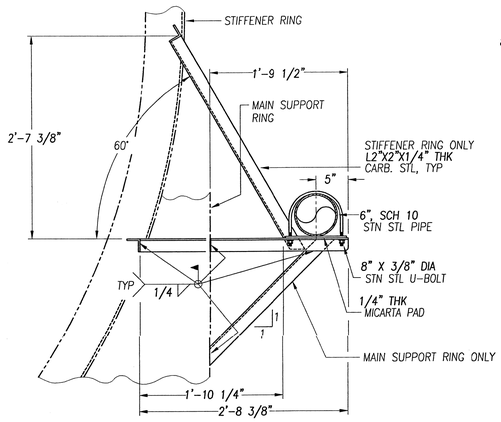

DETAIL – PS3 (3 M5 M5)

NO SCALE (8 REQUIRED)

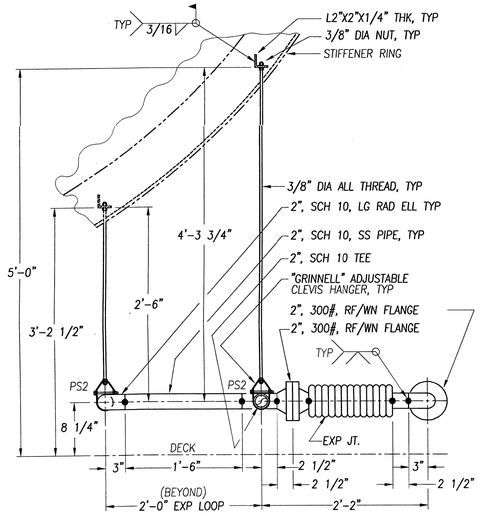

DETAIL – PS2 (2 M5 M5)

NO SCALE (7 REQUIRED)

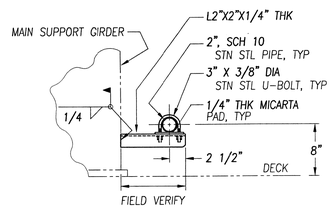

DETAIL – PS4 (4 M5 M5)

NO SCALE (1 REQUIRED)

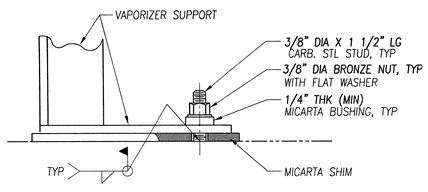

TYPICAL VAPORIZER SUPPORT

NO SCALE

LEGEND

PSX PIPE SUPPORT

0 1 2 3

GRAPHIC SCALE IN INCHES

FOR REFERENCE ONLY

ISSUED/CEF

SYM	ZONE	DESCRIPTION	DATE	APPROVED
		THIS DRAWING MADE SORD, FORMERLY SWR-J1PR7D9901 DOC. M5. TDB. 10/6/05		JAN 23 2006

REVISIONS

SIGNATURES		DATE
DRAWN	L. ARCENEAUX	2/25/03
CHECKED	V. HATHCOCK	2/26/03
ENGINEER	L. ARCENEAUX	2/25/03
ISSUED	ISSUED/CEF	3/10/03
CONCURRENCE		
SUBMITTED	DAVID ALSTON/K.A.B.	2/27/03
SAFETY	W.R. VANDAGRIFF	3/7/03
APPROVED	M. WILLIS	3/6/03
USED ON	31B00-D001	

NATIONAL AERONAUTICS AND SPACE ADMINISTRATION — JOHN C. STENNIS SPACE CENTER, SSC, MS 39529-6000

MSS Mississippi Space Services

REPLACE LOX BARGES #2 & #6 VAPORIZERS

ELEVATIONS, SECTIONS & DETAILS

REF NO M5

CADD CONTROLLED DRAWING
CADD P/N: 31B00-M006sht1r0

SIZE F | DWG NO. 31B00-M006 | REV 0

AUTHORITY SWR-J1PR7D9901 | SHEET

REF: EMI-J1PR7D9901 M5

EMI GM830RFP00