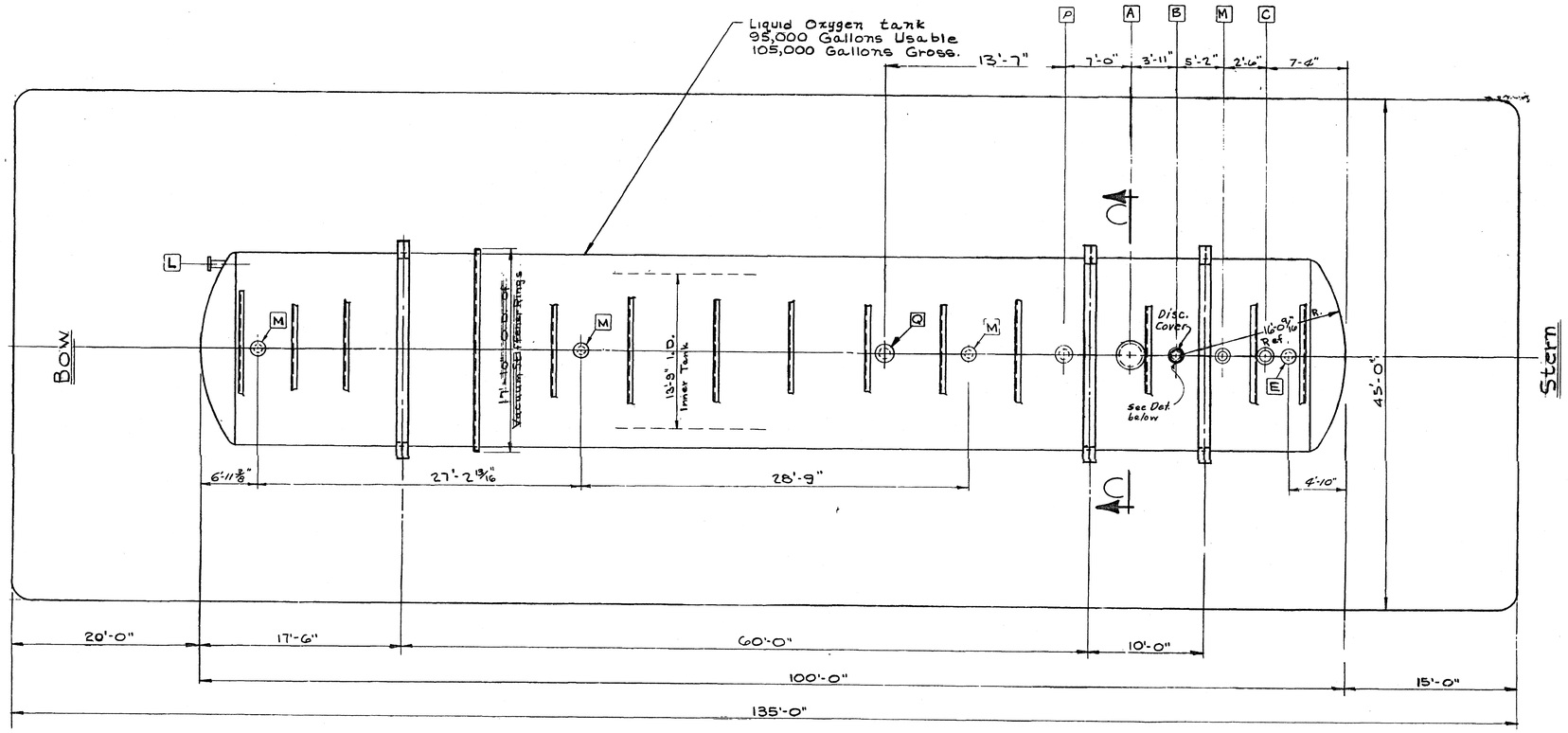

Plan View

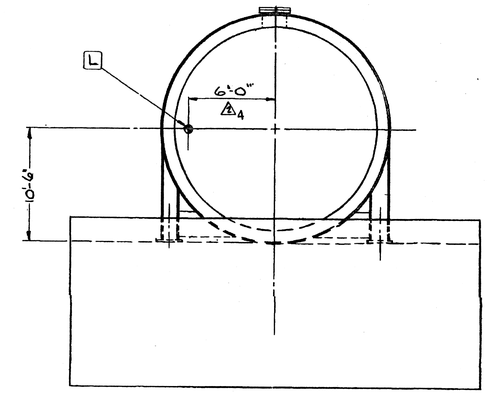

View B-B

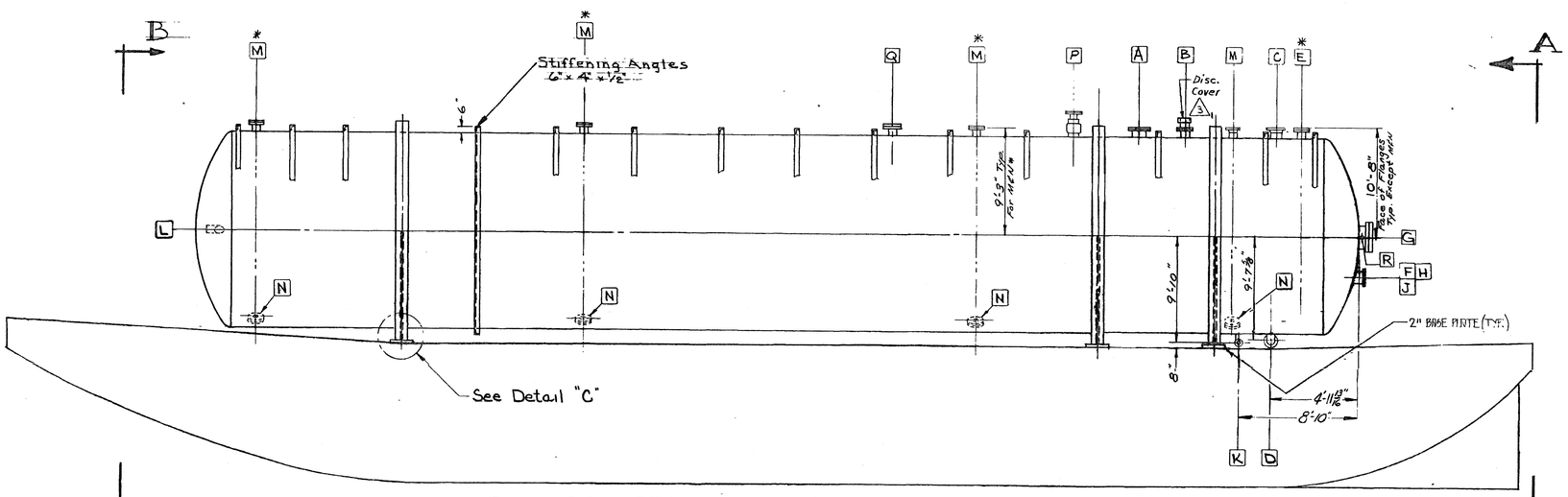

Port Side Elevation View

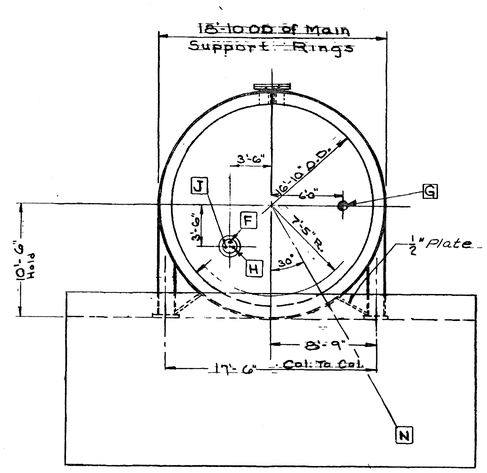

View A-A

FOR REFERENCE ONLY

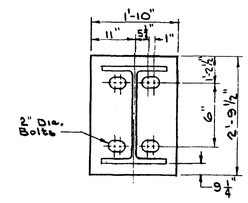

Detail "C"
Typical For Sliding Support
Fixed End Identical Except For Holes.

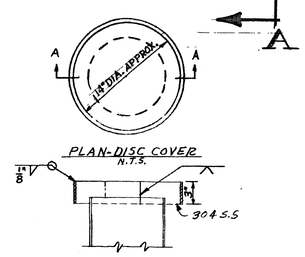

GRAPHIC SCALE IN INCHES

NOTES:

1. TYP. FOR LOX BARGE NO. 2 ONLY.

Letter	Size	Type	Service
Q	4"	Flanged	Cleaning Inlet
P	6"	150# ASA R.F. Flg.	LE 602
N	8"	Flanged	Perlite Drain
M	8"	Flanged	Perlite Fill
L	1"	150# ASA R.F. Flg.	Vacuum Connection
K	2"	300# ASA R.F. Flg.	Vaporizer Feed.
J	1/2"	Sch. 160 B.W. Conn.	Lower Liquid Level
H	1/2"	Sch. 160 B.W. Conn.	Vacuum Gauge Connection
G	6"	150# ASA R.F. Flg.	Vacuum Pump Connection
F	1/2"	Sch. 160 B.W. Conn.	Upper Liquid Level
E	6"	150# ASA R.F. Flg.	Vaporizer Return
D	8"	150# ASA R.F. Flg.	Liquid Oxygen Fill & Drain
C	8"	150# ASA R.F. Flg.	Vent
B	8"	—	Rupture Disc Connection.
A	18"	—	Manway
K	1/2"	FNPT	PRESSURE TAP

Nozzle Identification

SYM	ZONE	DESCRIPTION	DATE	APPROVED
OA		ADMIN CHANGE TO MAKE FORMAT COMPATIBLE WITH WINDCHILL. UPDATED FROM ORIGINAL. FOR SIGNATURES SEE HISTORY. TDS. 11/7/05 T.O.M. 11/7/05	11/7/05	

REVISIONS

SIGNATURES	DATE
DRAWN	
CHECKED	
ENGINEER	
ISSUED ISSUED/CEF	11/5/69
CONCURRENCE	
SUBMITTED	
SAFETY	
APPROVED	DATE
USED ON 31B00-D001	

NATIONAL AERONAUTICS AND SPACE ADMINISTRATION
JOHN C. STENNIS SPACE CENTER SSC, MS 39529-6000
MSS Mississippi Space Services

PROPELLANT BARGES
LOX BARGE MOUNTED VESSEL
GENERAL ARRANGEMENT

SIZE F | DWG NO. 31B00-M001 | REV 0A

AUTHORITY | SHEET

REF NO 0-M1

CADD CONTROLLED DRAWING
CADD P/N: 31B00-M001sht1rOA

REF: MTF-805

ISSUED/CEF NOV 25 2005

EMI GM830RFP00