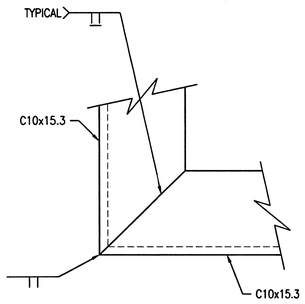

TYPICAL C10 TO C10 PLATFORM CORNER CONNECTION (A S4|S9) (A S8|S9)
SCALE: 6"=1'-0"

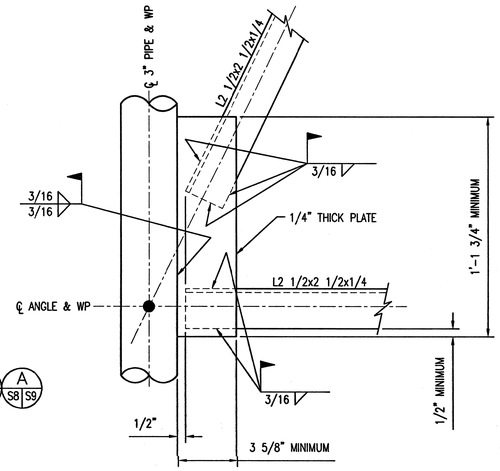

TYPICAL PIPE TO ANGLE BRACE CONNECTION (1 S4|S9) (1 S8|S9)
SCALE: 3"=1'-0"

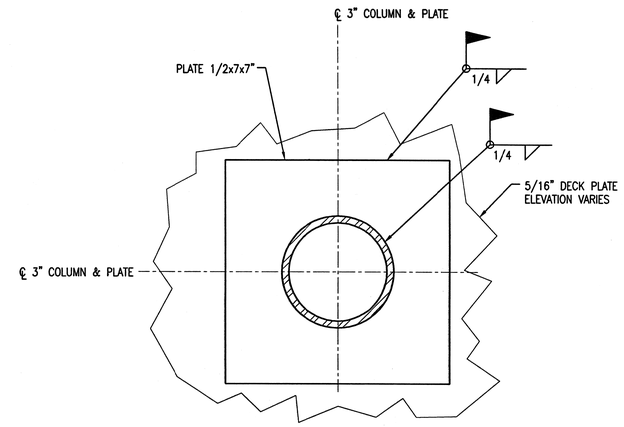

TYPICAL PIPE COLUMN TO PLATE TO DECK CONNECTION (B S4|S9) (B S8|S9)
SCALE: 6"=1'-0"

NOTES:

1. SEE DRAWING S1 FOR GENERAL NOTES.

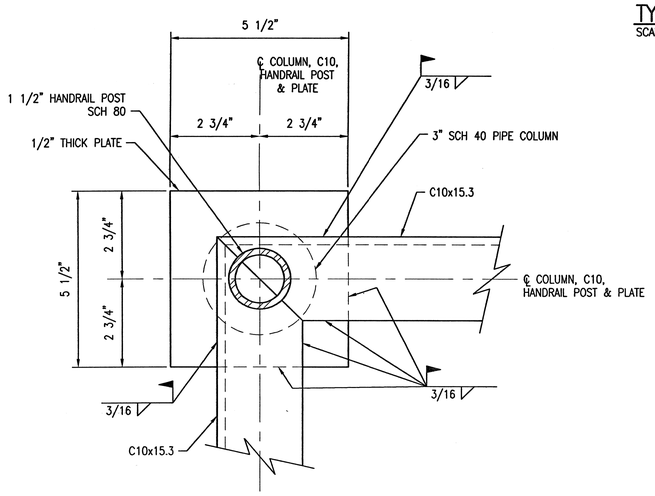

PLAN

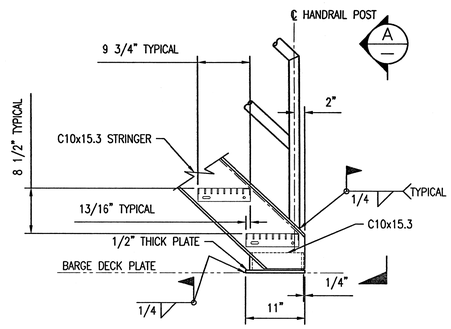

VIEW (LH BARGE) (N S1|S9)
SCALE: 1"=1'-0"

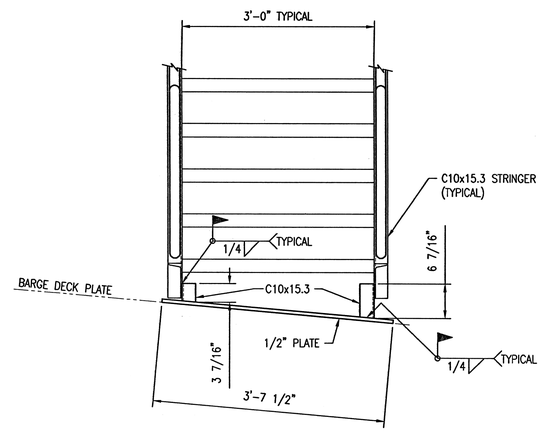

VIEW (LH BARGE) (A —)
SCALE: 1"=1'-0"

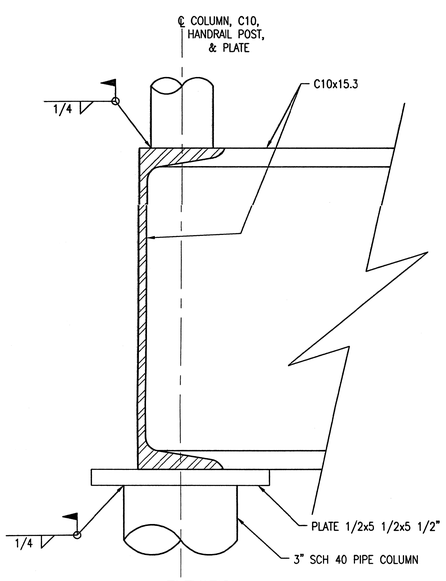

ELEVATION

TYPICAL COLUMN TO PLATFORM DETAIL (1 S2|S9) (1 S6|S9)
SCALE: 3"=1'-0"

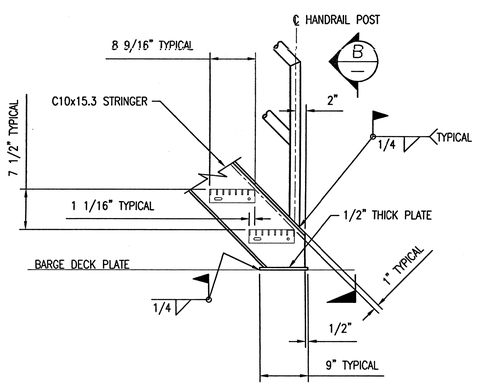

VIEW (LOX BARGE) (K S5|S9)
SCALE: 1"=1'-0"

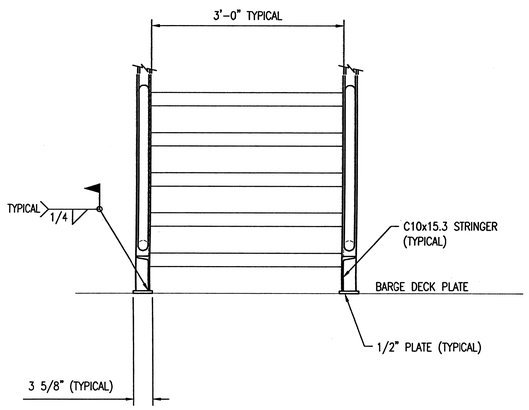

VIEW (LOX BARGE) (B —)
SCALE: 1"=1'-0"

0 1 2 3
GRAPHIC SCALE IN INCHES

FOR REFERENCE ONLY

SYM	ZONE	DESCRIPTION	DATE	APPROVED
		THIS DRAWING MADE SORD FORMERLY SWR-PTMT7Q9535 S9. REVISED TO MAKE FORMAT COMPATIBLE WITH WINDCHILL. ORIGINALLY PREPARED BY "MSS". 7DB 11/10/07 Rm P 11-10-07	12/7/07	ISSUED/CEF DEC 11 2007

REVISIONS

SIGNATURES		DATE
DRAWN	C. ADCOX	3/10/03
CHECKED	T. DAVE SMITH	3/10/03
ENGINEER	ROGER BLAKE	3/10/03
ISSUED	ISSUED/CEF	3/17/03
CONCURRENCE		
SUBMITTED	B. EDGECOMBE	3/12/03
SAFETY	W.R. VANDAGRIFF	3/17/03
APPROVED	M. WILLIS	3/14/03
USED ON	31C00-D001	

NATIONAL AERONAUTICS AND SPACE ADMINISTRATION
JOHN C. STENNIS SPACE CENTER SSC, MS 39529-6000
JE JACOBS FOSC Group

CRYO BARGE STAIRS
LOX BARGE
DETAILS, SECTIONS & VIEWS
BARGE LOX-1, 3, 4, & 5

SIZE F | DWG NO. 31B00-A020 | REV 0
AUTHORITY SWR-PTMT7Q9535 | SHEET

REF NO S9

CADD CONTROLLED DRAWING
CADD P/N: 31B00-A020sht1r0

REF: EMI PTMT7Q9535 DWG S9

EMI GM830RFP00