NOTES:

1. SEE DRAWING S1 FOR GENERAL NOTES.

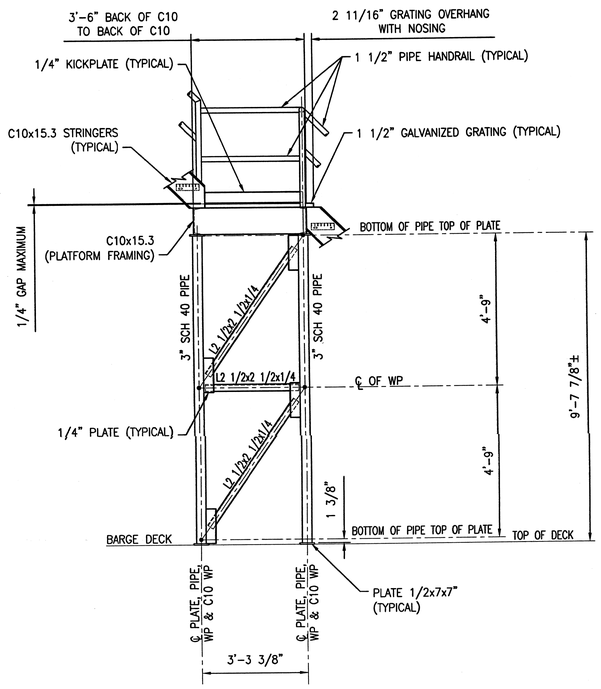

VIEW (B S5/S8) (C S5/S8) SIMILAR
SCALE: 1/2"=1'-0"

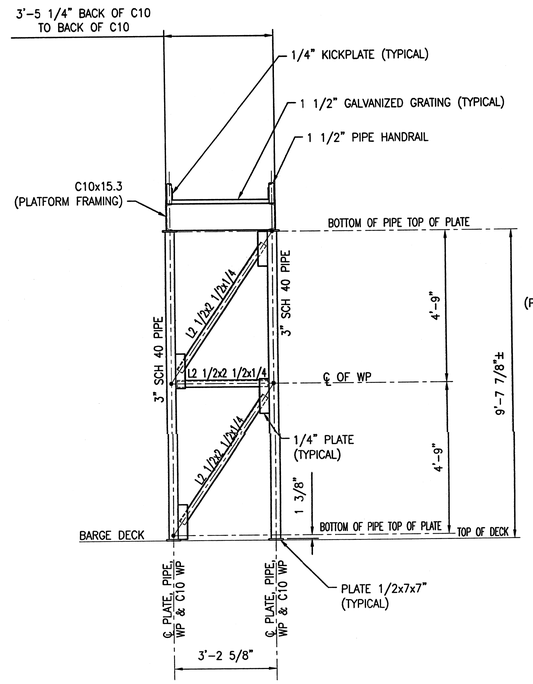

VIEW (D S5/S8) (E S5/S8) SIMILAR
SCALE: 1/2"=1'-0"

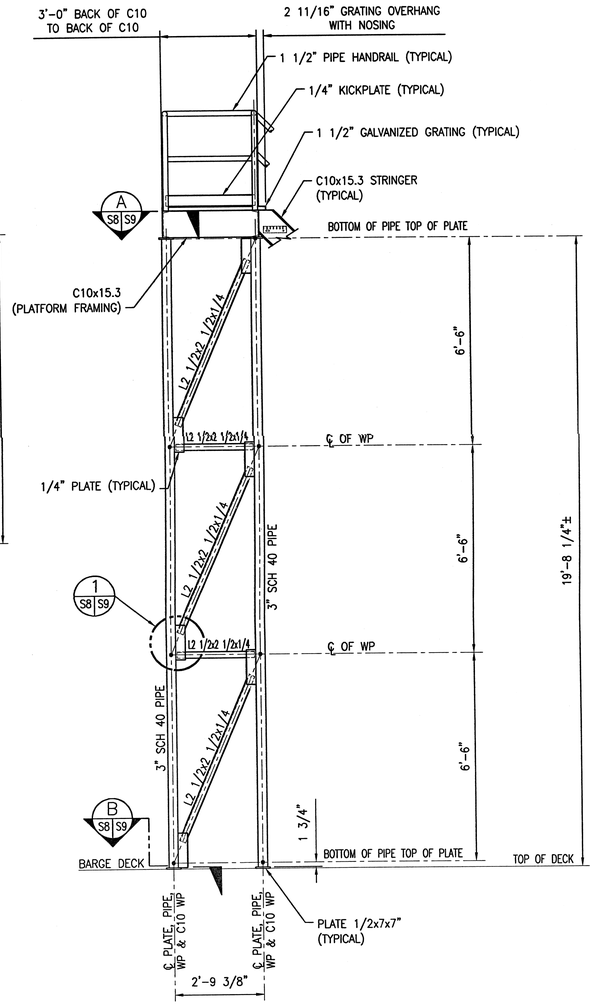

VIEW (F S5/S8) (G S5/S8) SIMILAR
SCALE: 1/2"=1'-0"

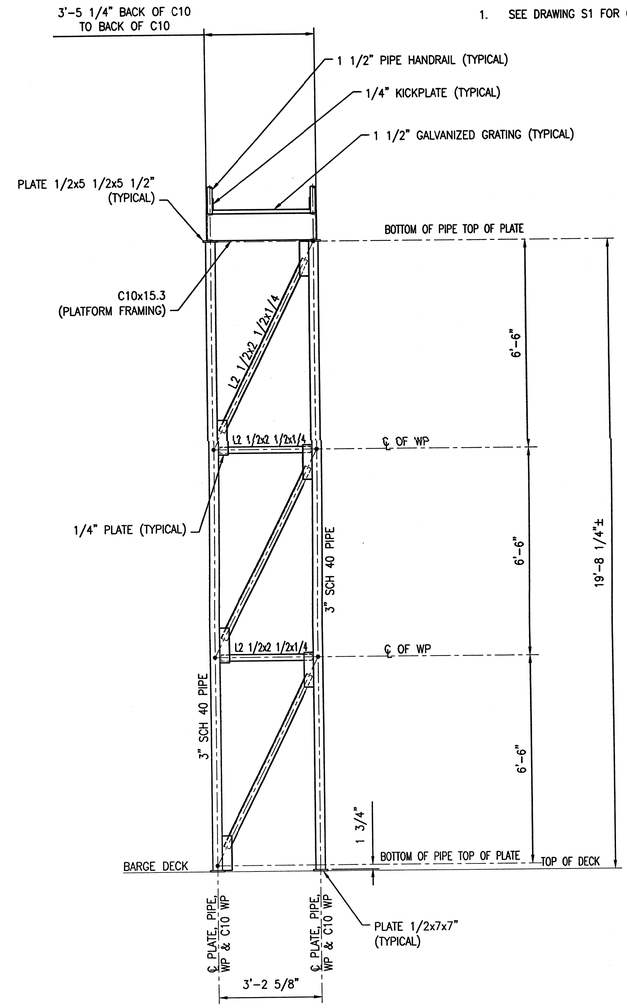

VIEW (H S5/S8) (J S5/S8) SIMILAR
SCALE: 1/2"=1'-0"

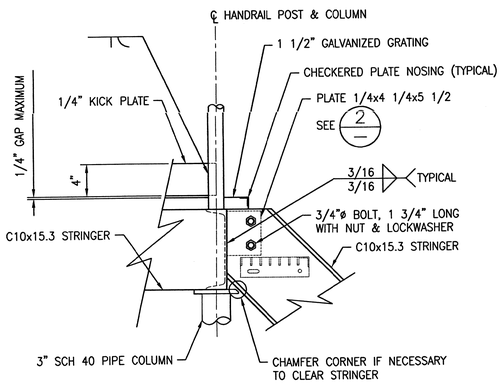

TYPICAL LOWER STRINGER TO PLATFORM DETAIL
SCALE: 1 1/2"=1'-0"

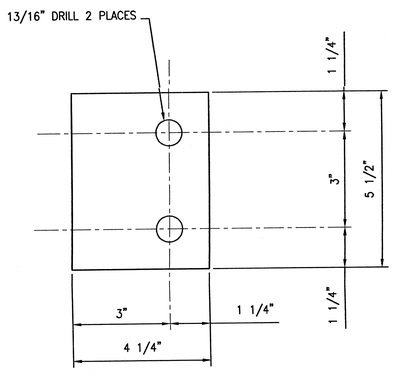

PLATE DETAIL 2
SCALE: 6"=1'-0"

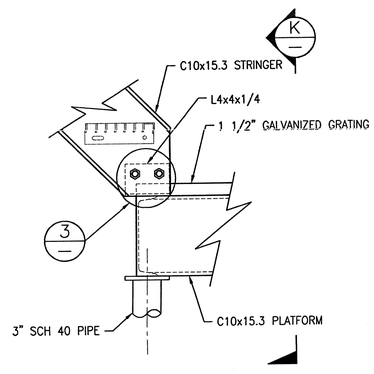

TYPICAL UPPER STRINGER TO PLATFORM DETAIL
SCALE: 1 1/2"=1'-0"

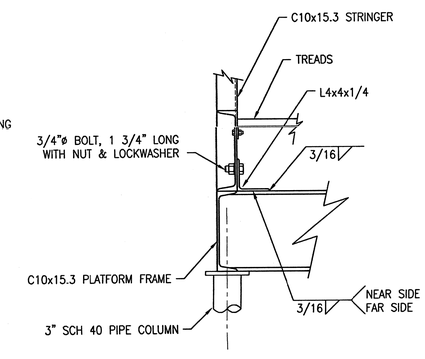

NOTE: GRATING NOT SHOWN

SECTION K
SCALE: 1 1/2"=1'-0"

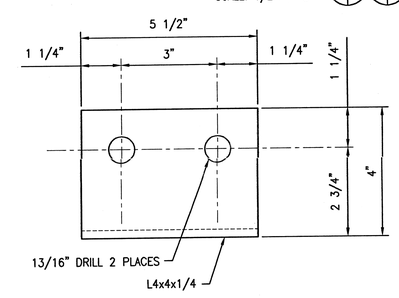

DETAIL 3
SCALE: 6"=1'-0"

FOR REFERENCE ONLY

SYM	ZONE	DESCRIPTION	DATE	APPROVED
		THIS DRAWING MADE SORD FORMERLY SWR-PTMT709535 S8. REVISED TO MAKE FORMAT COMPATIBLE WITH WINDCHILL. ORIGINALLY PREPARED BY "MSS". TDS. 11/10/07 KMP 11-10-07	12 DEC 11 2007	ISSUED/CEF

REVISIONS

SIGNATURES		DATE
DRAWN	C. ADCOX	3/10/03
CHECKED	T. DAVE SMITH	3/10/03
ENGINEER	ROGER BLAKE	3/10/03
ISSUED	ISSUED/CEF	3/17/03
CONCURRENCE		
SUBMITTED	B. EDGECOMBE	3/12/03
SAFETY	W.R. VANDAGRIFF	3/17/03
APPROVED	M. WILLIS	3/14/03
USED ON	31B00-D001	

NATIONAL AERONAUTICS AND SPACE ADMINISTRATION
JOHN C. STENNIS SPACE CENTER SSC, MS 39529-6000

JACOBS — FOSC Group

CRYO BARGE STAIRS
LOX BARGE
PLATFORM FRAMING DETAILS & VIEWS
BARGE LOX-1, 3, 4, & 5

REF NO S8

CADD CONTROLLED DRAWING
CADD P/N: 31B00-A014sht1r0

SIZE F | DWG NO. 31B00-A014 | REV 0
AUTHORITY SWR-PTMT709535 | SHEET

REF: EMI PTMT709535 DWG S8

GRAPHIC SCALE IN INCHES 0 1 2 3

EMI GM830RFP00