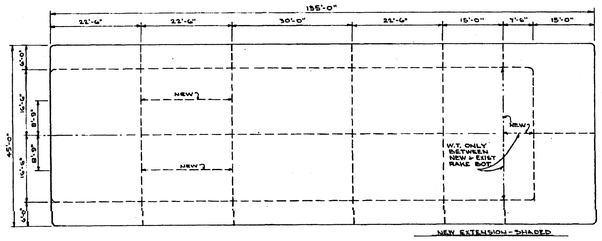

KEY PLAN
SHOWING W.T. BHD.
SCALE: 1/32" = 1'-0"

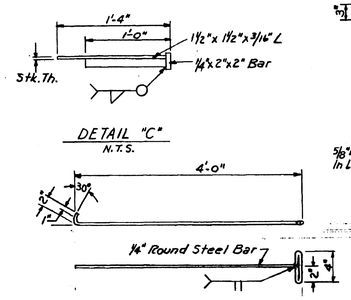

DETAIL "C"
N.T.S.

DETAIL "D"
N.T.S.

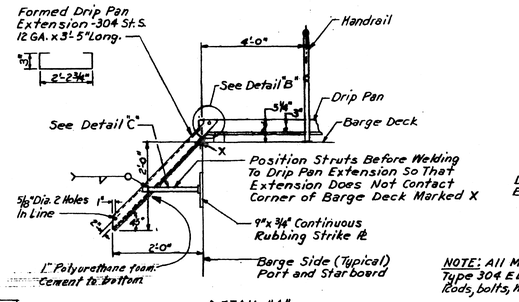

DETAIL "A"
N.T.S.

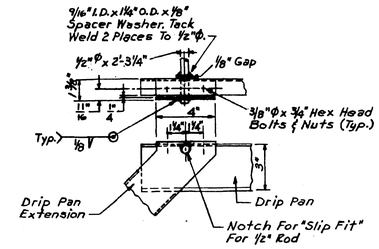

DETAIL "B"
N.T.S.

NOTE: All Materials St. Stl. Type 304 ELC, Including Sheets, Rods, bolts, Washers, etc.

TYPICAL - DRIP PAN EXTENSION DETAILS
N.T.S.,
LOX BARGE - Requires (3) 1 - Port Side; 2 - Starboard Side

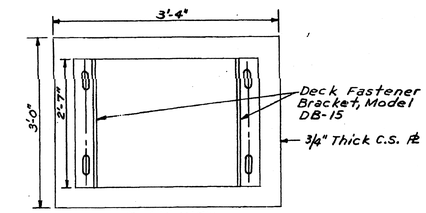

PLAN VIEW

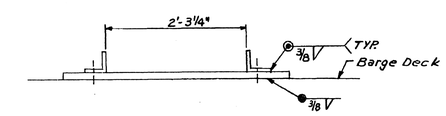

SECTION "C"-"C" WINCH MOUNT
N.T.S.
Typical For 15 Ton Winch DLYMPIC Model SM-1510 W or 1514 W.
(Typical Lox Barges)

PAN DIMENS. ARE FOR GUIDANCE - TO BE CHECKED AGAINST FINAL PIPE LAYOUT.

PAN TO BE FABRICATED IN SECTIONS THAT WILL ALLOW REMOVAL FOR INSPECTION OF DECK BELOW WITHOUT DISTURBING PIPING.

ALL DRIP PAN SEAMS TO BE WELDED - FILLET WELD TOP SURFACE OF LAP JOINTS AND PLUG WELD ALL SCREW HOLES.

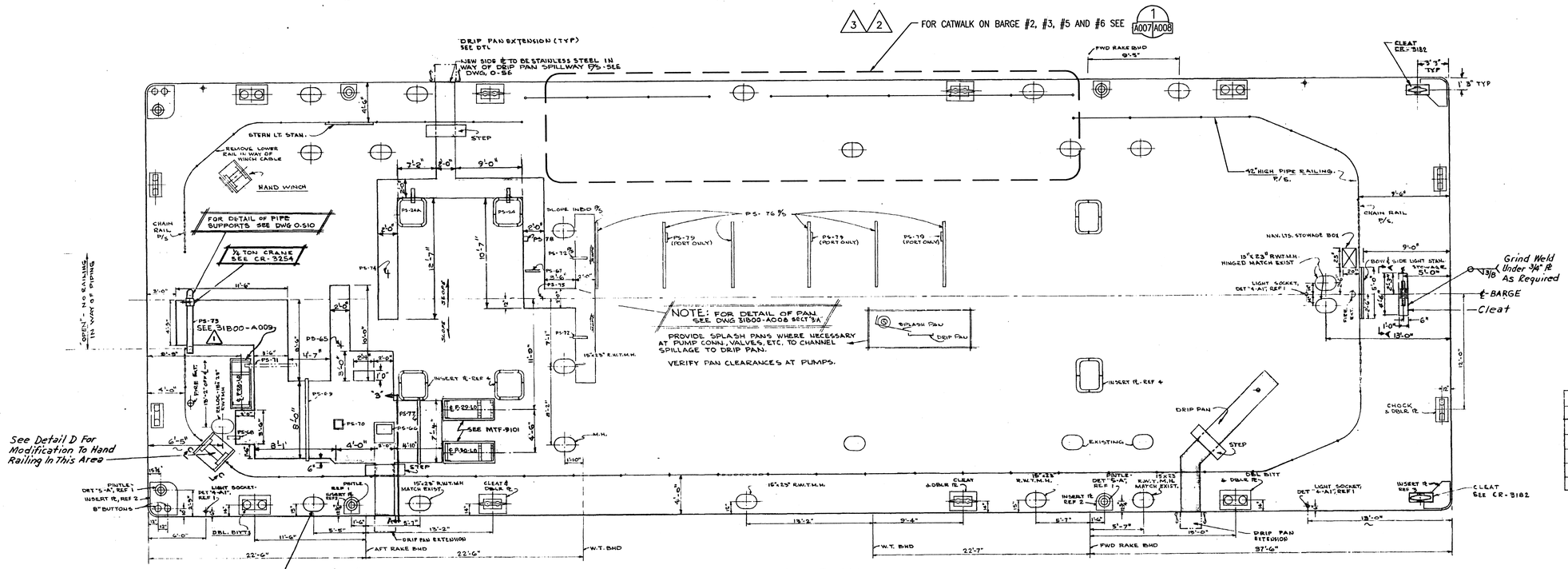

DECK ARRANGEMENT PLAN
SCALE: 3/16" = 1'-0"
SCALE: 3/16 IN. = 1 FT.

REFERENCE DWGS.		
Nº	TITLE	DWG Nº
1	DECK GENERAL ARRGMT & MISC. DET. - L H2 BARGE	H-S6
2	WIDENING OF LOX BARGE	0-S6
3	BOW RAKE - PLAN, ELEV. & BHD & TRANS SECT	0-S5
4	TANK SUPPORTS	0-S7
5	PIPE SUPPORTS	0-S10

FOR REFERENCE ONLY

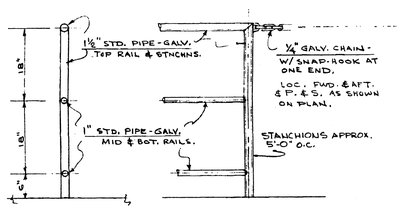

TYPICAL PIPE-RAILING DETAIL
DETAIL "5-A"
SCALE: NONE

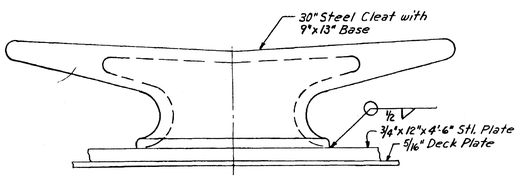

SECTION "A"-"A"
N.T.S.
(Typical For Lox Barges)

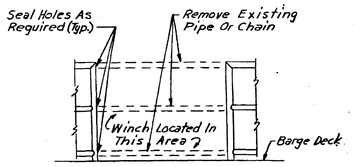

DETAIL "D"
N.T.S.
(Typical For Lox Barges)

GRAPHIC SCALE IN INCHES

SYM	ZONE	DESCRIPTION	DATE	APPROVED
4		COC RECEIVED FOR SWR-J1RDBB5000 WITH FCR TO INCORPORATE. ALL AFFECTED DRAWINGS HAVE BEEN REVISED. THIS DRAWING WAS NOT AFFECTED. THIS JOB IS COMPLETE. TDS 6/9/06 TMM 6/9/06	ISSUED/CEF 10 JUL 2 0 2006	
3	GEN	ADDED CATWALK TO BARGES #2 AND #6 PER SWR-J1PR7D9901 E.O. 3. REVISED FORMAT, FORMERLY US ARMY CORPS OF ENGINEERS, TO INC. DWG INTO WINDCHILL. FOR PREVIOUS REVISION SEE HISTORY. T.D.S. 01/06/05 J.B. 01/06/05	03/02/05 03/01/05	ISSUED/CEF T. ADDLESPERGER

REVISIONS

SIGNATURES		DATE
DRAWN	P. MAYNARD	11/22/63
CHECKED	W. MICHAEL	11/22/63
ENGINEER		
ISSUED	ISSUED/CEF	11/05/69
CONCURRENCE		
SUBMITTED		
SAFETY		
APPROVED		DATE
USED ON	31B00-D001	

NATIONAL AERONAUTICS AND SPACE ADMINISTRATION
JOHN C. STENNIS SPACE CENTER SSC, MS 39529-6000
MSS Mississippi Space Services

PROPELLANT BARGES
135'-0" X 45'-0" X 10'-6" LOX BARGE
DECK GENERAL ARRANGEMENT

REF NO 0-S9

CADD CONTROLLED DRAWING
CADD P/N: 31B00-A007SHT1R4

SIZE F | DWG NO. 31B00-A007 | REV 4
AUTHORITY | SHEET

REF:MTF-803

EMI GM830 RFP00