NOTICE - WHEN GOVERNMENT DRAWINGS, SPECIFICATIONS, OR OTHER DATA ARE USED FOR ANY PURPOSE OTHER THAN IN CONNECTION WITH A DEFINITELY RELATED GOVERNMENT PROCUREMENT OPERATION, THE UNITED STATES GOVERNMENT THEREBY INCURS NO RESPONSIBILITY NOR ANY OBLIGATION WHATSOEVER; AND THE FACT THAT THE GOVERNMENT MAY HAVE FORMULATED, FURNISHED, OR IN ANY WAY SUPPLIED THE SAID DRAWINGS, SPECIFICATIONS OR OTHER DATA IS NOT TO BE REGARDED BY IMPLICATION OR OTHERWISE AS IN ANY MANNER LICENSING THE HOLDER OR ANY OTHER PERSON OR CORPORATION, OR CONVEYING ANY RIGHTS OR PERMISSION TO MANUFACTURE, USE, OR SELL ANY PATENTED INVENTION THAT MAY IN ANY WAY BE RELATED THERETO.

REVISIONS			
SYM	DESCRIPTION	DATE	APPROVAL

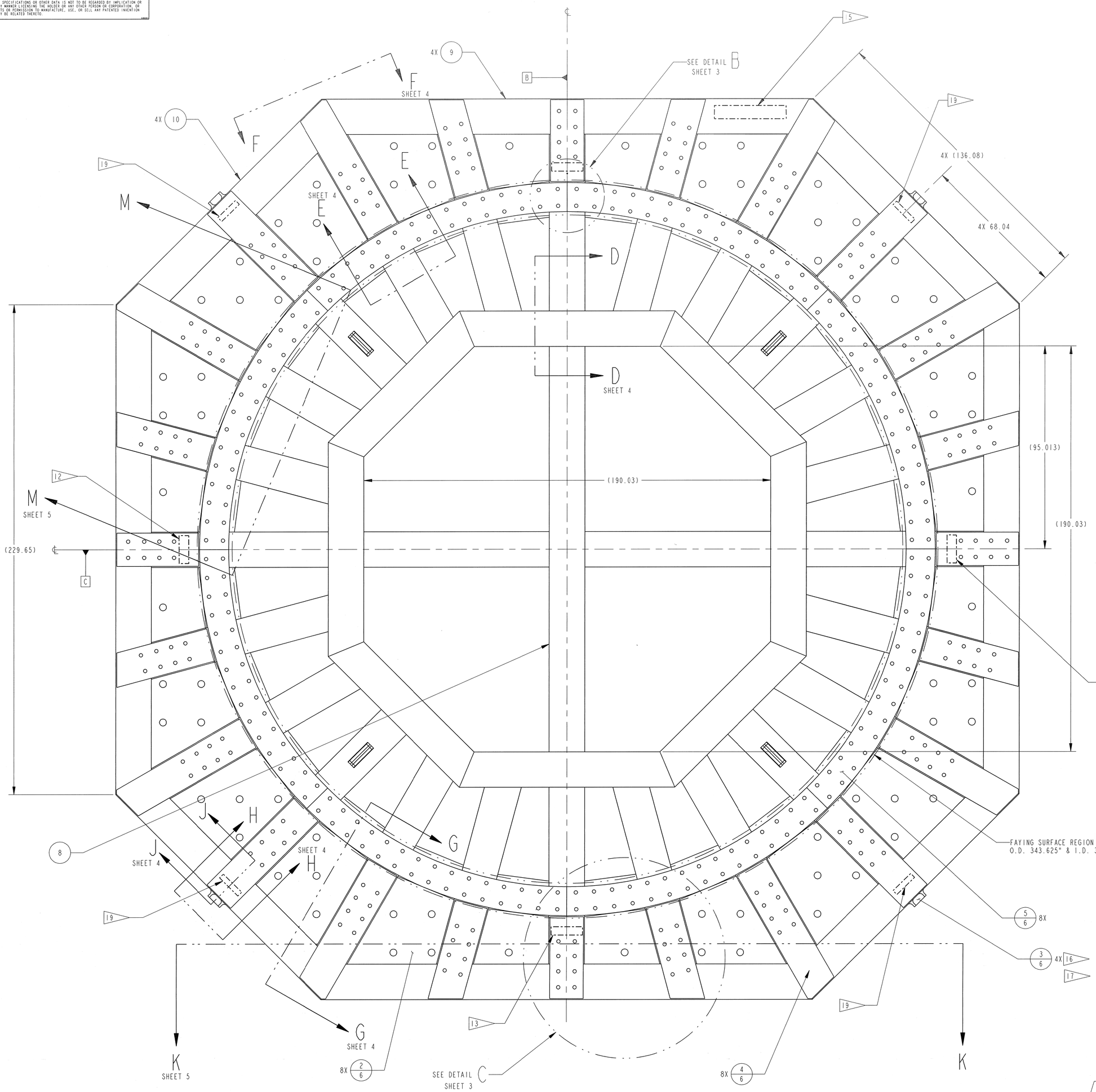

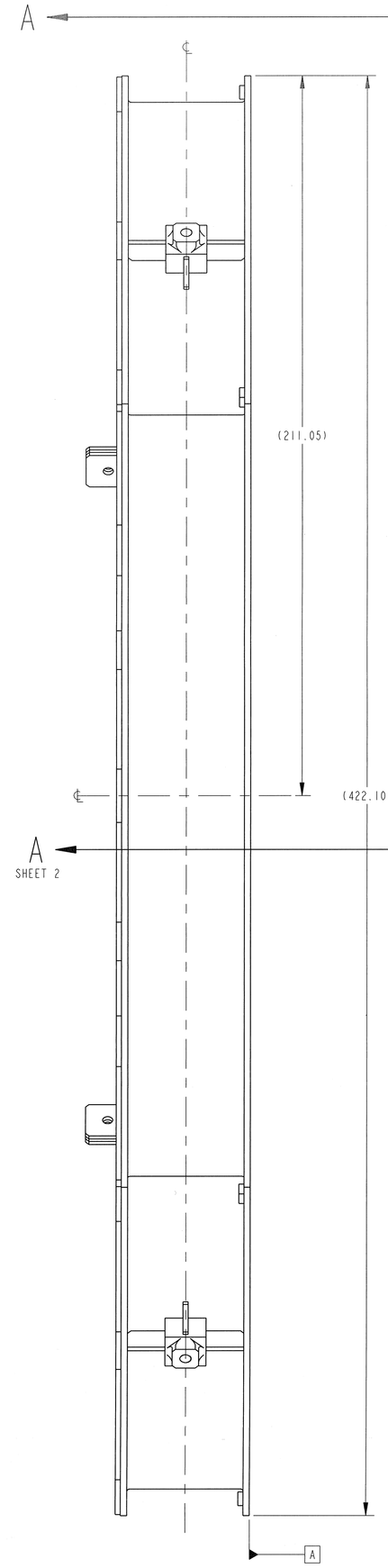

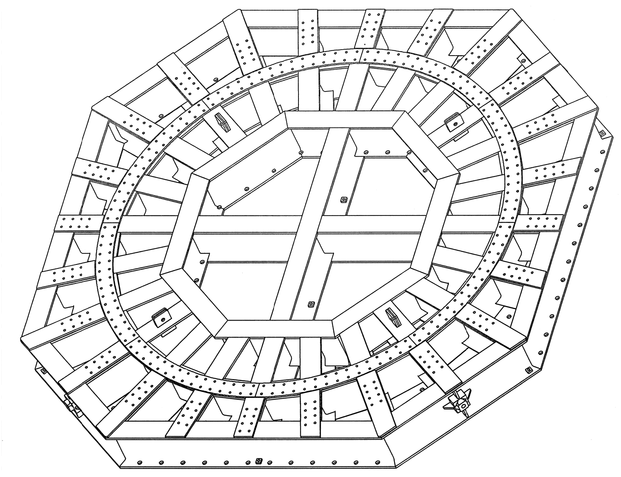

ISOMETRIC VIEW
FOR REFERENCE ONLY

GENERAL NOTES:

1. REMOVE ALL BURRS AND BREAK ALL SHARP EDGES.
2. COPE TO FIT AS REQUIRED.
3. ALL STRUCTURAL STEEL SHAPES SHALL CONFORM TO THE DESIGNATIONS AND DIMENSIONS OF THE14TH EDITION AISC "STEEL CONSTRUCTION MANUAL."
4. STEEL WELDING DESIGN, PROCEDURES, AND NON-DESTRUCTIVE EVALUATION SHALL BE PER ANSI/AWS D1.1/D1.1M: "STRUCTURAL WELDING CODE-STEEL" AND CURRENT AS OF THE RELEASE DATE OF THIS DRAWING. UTILIZE WELDING PRACTICES AND TECHNIQUES TO MINIMIZE DISTORTION. UNLESS OTHERWISE SPECIFIED, WELDS SHALL BE 100% VISUALLY INSPECTED.
5. PREPARE SURFACE PER PAINT MANUFACTURER'S RECOMMENDATIONS AND ABRASIVE CLEAN WHERE NECESSARY. PRIME USING A POLYURETHANE PRIMER AND PAINT USING POLYURETHANE ENAMEL TOP COAT (REFERENCE-SHERWIN WILLIAMS POLANE F63) BATTLESHIP GRAY NO. 26440 PER FEDERAL STANDARD 595C. DO NOT PAINT THRU HOLES, THREADED HOLES, OR MACHINED SURFACES.
6. 125 ALL MACHINED SURFACES UNLESS OTHERWISE NOTED.
7. AFTER WELDING AND PRIOR TO FINAL MACHINING, STRESS RELIEVE PER AMS 2759/11. A BRIGHT OR SCALE-FREE SURFACE IS REQUIRED FOR NOTED FAYING SURFACES.
8. REGION SPECIFIED TO APPLY .050 FLATNESS REQUIREMENT WITH A MINIMUM FINAL FLANGE THICKNESS OF 1.850".
9. SPOTFACE FAR SIDE OF HOLE AS REQ'D TO ENSURE A REMAINING MATERIAL THICKNESS OF 1.850 + .03/-.00 FOR A DEFINED FASTENER GRIP LENGTH. SPOTFACE DIAMETER TO BE 3.25 +/- .030.
10. REFERENCE FOR 4697 TEST STAND COORDINATE SYSTEM ONLY. 0.5" DIAMETER BENCHMARK HOLE LOCATES 0 DEGREES.
11. STENCIL REFERENCE COORDINATES, "4697, 0°" IN APPROXIMATE LOCATION INDICATED USING 2.0" HIGH CHARACTERS. COAT WITH ARMSTRONG CL CLEAR ADHESIVE OR APPROVED EQUAL USING YELLOW PAINT.
12. STENCIL REFERENCE COORDINATES, "4697, 90°" IN APPROXIMATE LOCATION INDICATED USING 2.0" HIGH CHARACTERS. COAT WITH ARMSTRONG CL CLEAR ADHESIVE OR APPROVED EQUAL USING YELLOW PAINT.
13. STENCIL REFERENCE COORDINATES, "4697, 180°" IN APPROXIMATE LOCATION INDICATED USING 2.0" HIGH CHARACTERS. COAT WITH ARMSTRONG CL CLEAR ADHESIVE OR APPROVED EQUAL USING YELLOW PAINT.
14. STENCIL REFERENCE COORDINATES, "4697, 270°" IN APPROXIMATE LOCATION INDICATED USING 2.0" HIGH CHARACTERS. COAT WITH ARMSTRONG CL CLEAR ADHESIVE OR APPROVED EQUAL USING YELLOW PAINT.
15. STENCIL PART NO. "90M14185" AND APPROXIMATE PART WEIGHT "183,000 LBS" IN APPROXIMATE LOCATION INDICATED USING 2.0" HIGH CHARACTERS. COAT WITH ARMSTRONG CL CLEAR ADHESIVE OR APPROVED EQUAL USING YELLOW PAINT.
16. INDICATED HOIST RING BLOCK TO BE USED WITH THE CROSBY GROUP HOIST RING, PART NO. HR-125 STOCK NO. 1017009, WITH A WORKING LOAD LIMIT OF 100,000 LBS. USE OF SPREADER BEAM REQUIRED IN ORDER TO NOT EXCEED BAIL PIVOT OF 180 DEGREES AS NOTED IN THE CROSBY SWIVEL HOIST RING WARNING AND APPLICATION INSTRUCTIONS.
17. WELDING DESIGN, PROCEDURES, AND NON-DESTRUCTIVE EVALUATION SHALL BE IN ACCORDANCE WITH THE REQUIREMENTS OF ANSI/AWS D14.1/D14.1M-2005 FOR CLASS 1 WELDS. THE DESIGN STRENGTH OF WELDS SHALL BE, AT A MINIMUM, AS DEFINED IN PARA. 3-3.4 OF ASME BTH-1-2008, "DESIGN OF BELOW-THE-HOOK LIFTING DEVICES."
18. WELD ALL AROUND O.D. BEST EFFORT.
19. STENCIL "SPREADER BEAM REQUIRED" IN APPROXIMATE LOCATION INDICATED USING 2.0" HIGH CHARACTERS. COAT WITH ARMSTRONG CL CLEAR ADHESIVE OR APPROVED EQUAL USING YELLOW PAINT.

APPROVED FOR PUBLIC RELEASE; DISTRIBUTION IS UNLIMITED

FIND NO.	CALLOUT SHT NO.	DETAIL SHT NO.	TOT REQ'D		PART NO.	DESCRIPTION	VEND NO.	REMARKS
11	6	-	A/R	P	90M14185-10	1.5" THICK PLATE, LEVELING SCREW FLANGE DOUBLER PLATE		MAT'L: ASTM A572 GRADE 50
10	1	-	4	E	90M14188-1	LOWER SPIDER CORNER SUB-ASSEMBLY LOX/FS		
9	1	-	4	E	90M14187-1	LOWER SPIDER OUTER PERIMETER SUB-ASSEMBLY LOX/FS		
8	1	-	1	E	90M14186-1	LOWER SPIDER INNER RING SUB-ASSEMBLY LOX/FS		
7	1	6	8	F	90M14185-7	1.5" THICK PLATE, HOIST BLOCK TOP GUSSET		MAT'L: ASTM A572 GRADE 50
6	1	6	8	F	90M14185-6	1.5" THICK PLATE, HOIST BLOCK SIDE GUSSET		MAT'L: ASTM A572 GRADE 50
5	1	6	8	F	90M14185-5	1.5" THICK PLATE, INNER RING FLANGE DOUBLER		MAT'L: ASTM A572 GRADE 50
4	1	6	8	F	90M14185-4	1.5" THICK PLATE, FLANGE DOUBLER		MAT'L: ASTM A572 GRADE 50
3	1	6	4	F	90M14185-3	HOIST RING BLOCK		MAT'L: ASTM A36
2	1	6	8	F	90M14185-2	1.5" THICK PLATE, BASE FLANGE DOUBLER		MAT'L: ASTM A572 GRADE 50
1	1	-	-	A	90M14185-1	LOX & FS LOWER SPIDER ASSEMBLY		

A=ASSEMBLY/INSTALLATION E=EXISTING F=FABRICATED ITEM M=MODIFIED ITEM P=PURCHASED ITEM

MATERIALS ENGINEER	DATE 2-6-14	PROGRAM MANAGER	DATE 02/06/2014
TEST ENGINEER	DATE 2-6-14	TEST ENGINEER	DATE 2/6/2014
STRUCTURAL ANALYSIS	DATE 2-6-14	SYSTEM DESIGN	DATE 2/6/2014
ELECTRICAL ENGINEER	DATE 2/6/14	MECHANICAL DESIGN	DATE 2/6/2014
TEST CONDUCTOR	DATE 2/6/14	QUALITY ENGINEER	DATE 2/6/2014
PROJECT SYSTEMS MANAGER	DATE 2/6/14	ETTS QUALITY ENGINEER	DATE 2/7/14

UNLESS OTHERWISE SPECIFIED TOLERANCES ARE
FRACTIONS ± 1/16 ± 1°/2
DECIMALS X- ± .06 XX- ± .03 XXX- ± .010 ∠- ± .50°
(DIMENSIONS ARE IN INCHES, DO NOT SCALE DRAWING)

LOX & FS LOWER SPIDER ASSEMBLY
SLS LOX & FS TEST

NEXT ASSEMBLY 90M14270 & 90M14228 | DATE 10-28-13 | DRAWN BY MEAGAN JOHNSON

SPECIAL TEST EQUIPMENT DESIGN BRANCH - ET50
GEORGE C. MARSHALL SPACE FLIGHT CENTER
NATIONAL AERONAUTICS AND SPACE ADMINISTRATION
HUNTSVILLE, ALABAMA

90M14185 REVISION ~

SIZE E SHEET 1 OF 6

NOTICE - WHEN GOVERNMENT DRAWINGS, SPECIFICATIONS, OR OTHER DATA ARE USED FOR ANY PURPOSE OTHER THAN IN CONNECTION WITH A DEFINITELY RELATED GOVERNMENT PROCUREMENT OPERATION, THE UNITED STATES GOVERNMENT THEREBY INCURS NO RESPONSIBILITY NOR ANY OBLIGATION WHATSOEVER, AND THE FACT THAT THE GOVERNMENT MAY HAVE FORMULATED, FURNISHED, OR IN ANY WAY SUPPLIED THE SAID DRAWINGS, SPECIFICATIONS OR OTHER DATA IS NOT TO BE REGARDED BY IMPLICATION OR OTHERWISE AS IN ANY MANNER LICENSING THE HOLDER OR ANY OTHER PERSON OR CORPORATION, OR CONVEYING ANY RIGHTS OR PERMISSION TO MANUFACTURE, USE, OR SELL ANY PATENTED INVENTION THAT MAY IN ANY WAY BE RELATED THERETO.

REVISIONS			
SYM	DESCRIPTION	DATE	APPROVAL

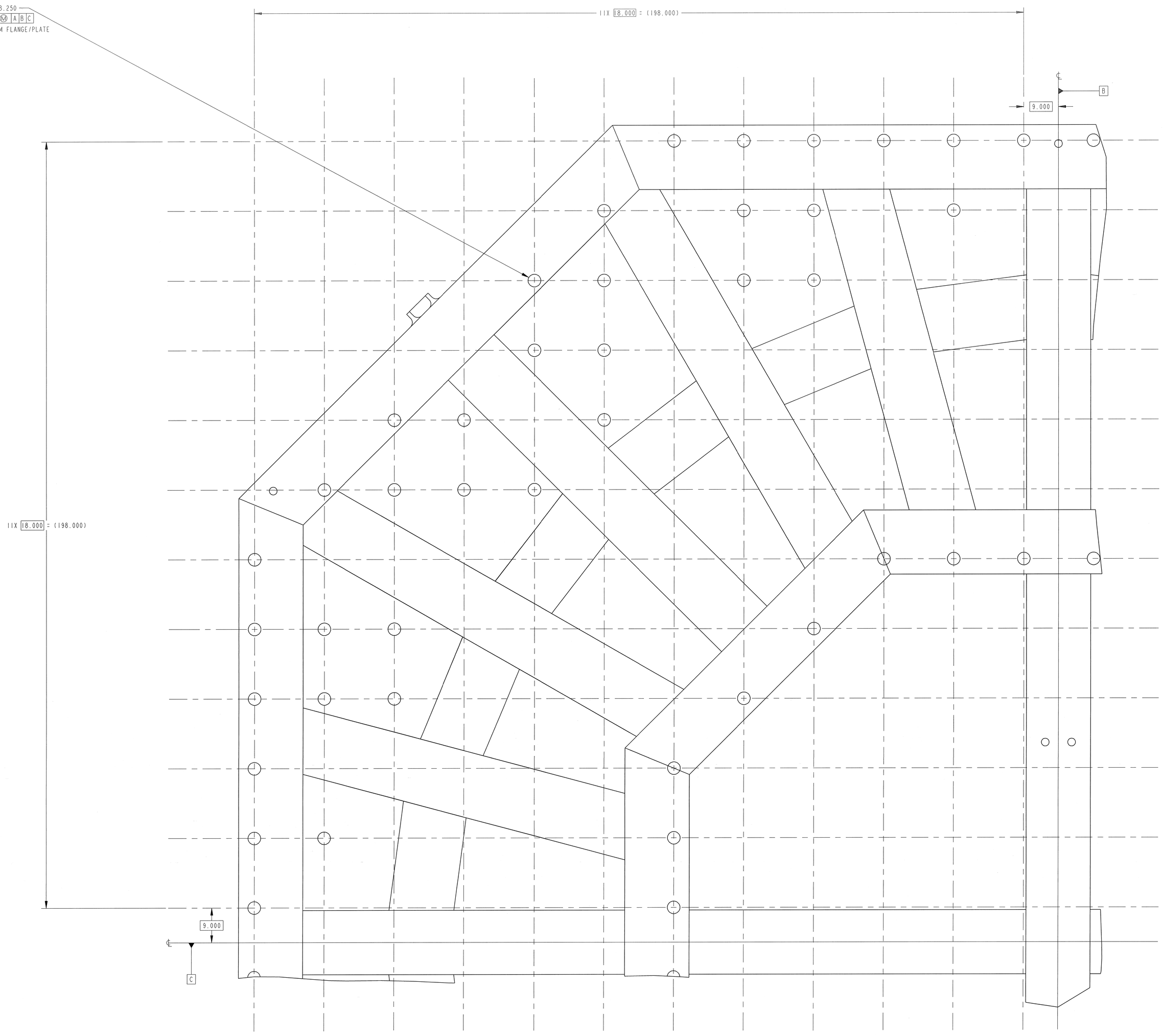

VIEW A - A 4X 90° APART
SCALE 1/10
SHEET 1

APPROVED FOR PUBLIC RELEASE; DISTRIBUTION IS UNLIMITED

LOX & FS
LOWER SPIDER
ASSEMBLY
SLS LOX & FS TEST

SPECIAL TEST EQUIPMENT
DESIGN BRANCH - ET50
GEORGE C. MARSHALL
SPACE FLIGHT CENTER
NATIONAL AERONAUTICS
AND SPACE ADMINISTRATION
HUNTSVILLE, ALABAMA

90M14185 REVISION SEE SHT1

DWG SIZE E SHEET 2 OF 6

NOTICE - WHEN GOVERNMENT DRAWINGS, SPECIFICATIONS, OR OTHER DATA ARE USED FOR ANY PURPOSE OTHER THAN IN CONNECTION WITH A DEFINITELY RELATED GOVERNMENT PROCUREMENT OPERATION, THE UNITED STATES GOVERNMENT THEREBY INCURS NO RESPONSIBILITY NOR ANY OBLIGATION WHATSOEVER, AND THE FACT THAT THE GOVERNMENT MAY HAVE FORMULATED, FURNISHED, OR IN ANY WAY SUPPLIED THE SAID DRAWINGS, SPECIFICATIONS OR OTHER DATA IS NOT TO BE REGARDED BY IMPLICATION OR OTHERWISE AS IN ANY MANNER LICENSING THE HOLDER OR ANY OTHER PERSON OR CORPORATION, OR CONVEYING ANY RIGHTS OR PERMISSION TO MANUFACTURE, USE, OR SELL ANY PATENTED INVENTION THAT MAY IN ANY WAY BE RELATED THERETO.

REVISIONS			
SYM	DESCRIPTION	DATE	APPROVAL

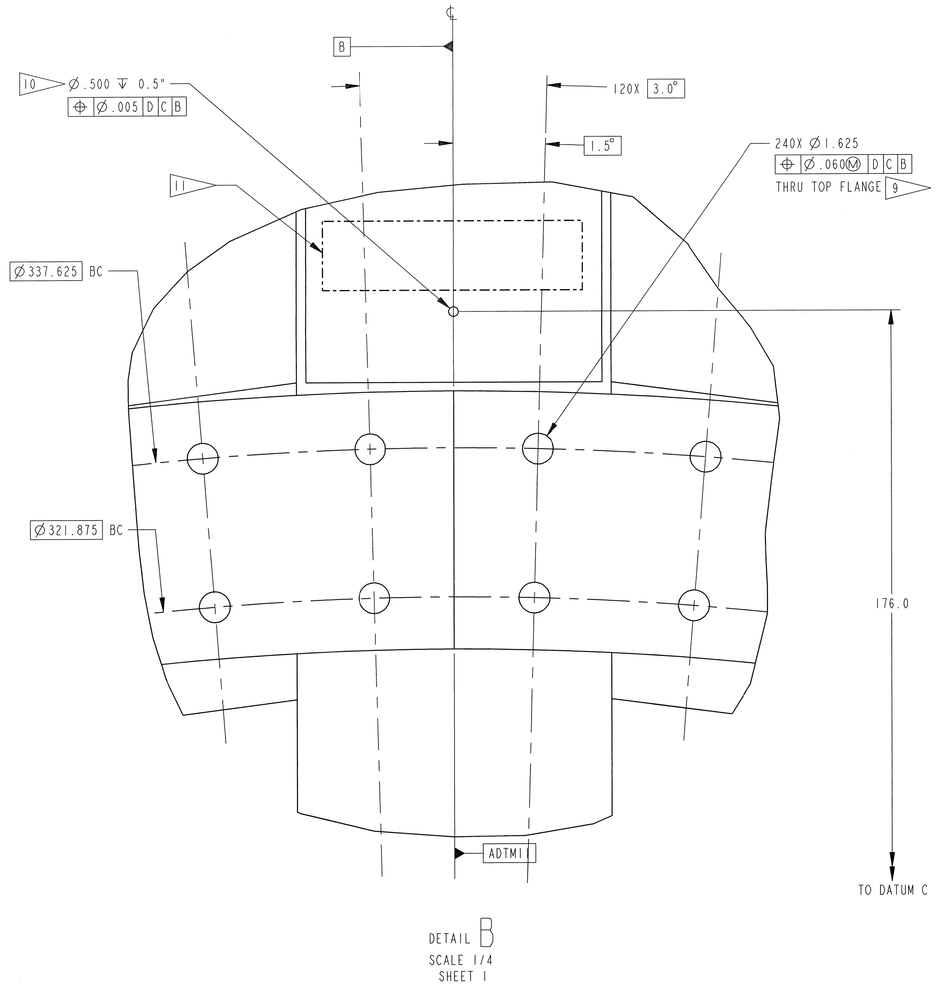

DETAIL B
SCALE 1/4
SHEET 1

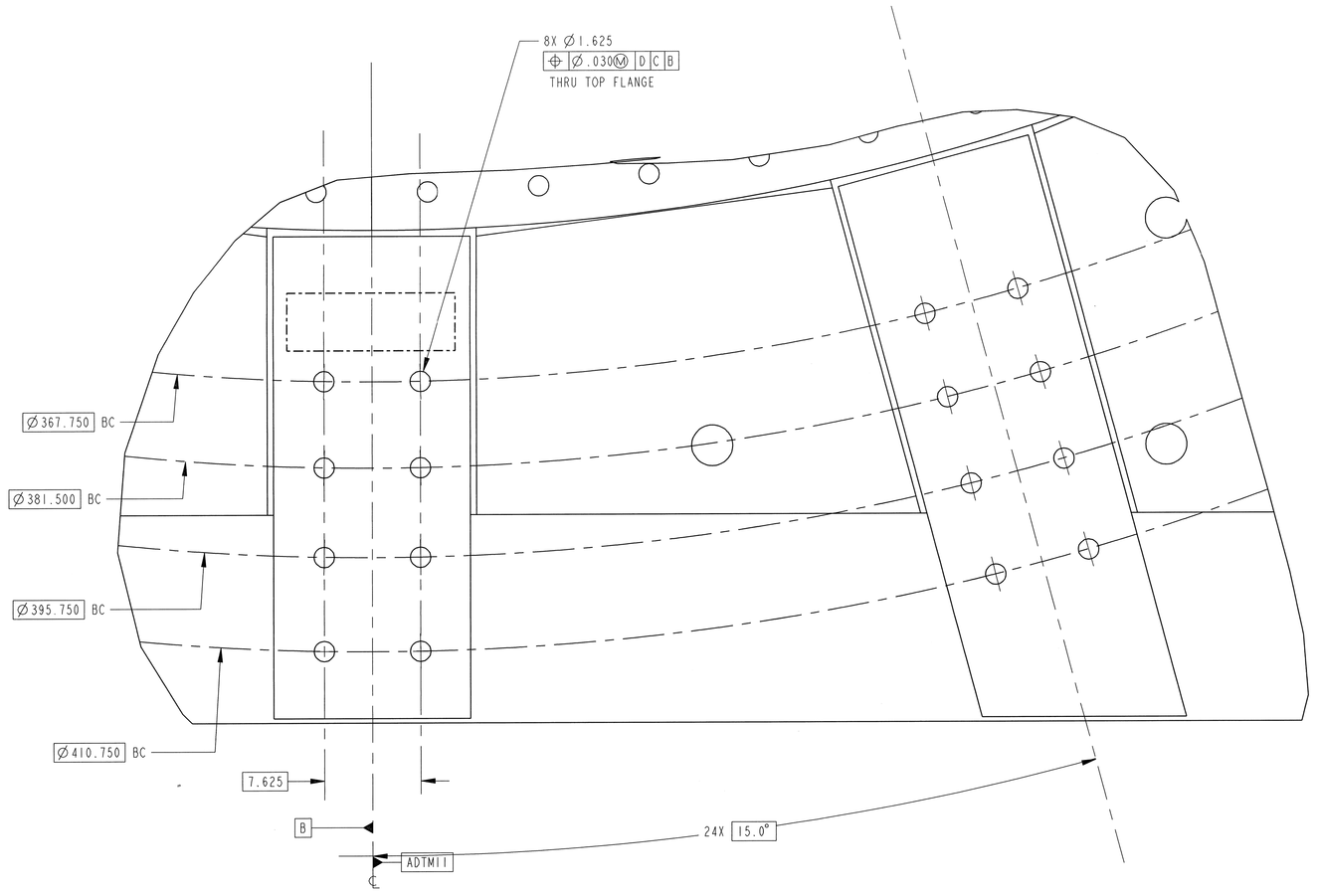

DETAIL C 24X
SCALE 1/6
SHEET 1

APPROVED FOR PUBLIC RELEASE; DISTRIBUTION IS UNLIMITED

LOX & FS
LOWER SPIDER
ASSEMBLY
SLS LOX & FS TEST

SPECIAL TEST EQUIPMENT
DESIGN BRANCH - ET50
GEORGE C. MARSHALL
SPACE FLIGHT CENTER
NATIONAL AERONAUTICS
AND SPACE ADMINISTRATION
HUNTSVILLE, ALABAMA

90M14185 REVISION SEE SHT1

DWG SIZE E SHEET 3 OF 6

NOTICE - WHEN GOVERNMENT DRAWINGS, SPECIFICATIONS, OR OTHER DATA ARE USED FOR ANY PURPOSE OTHER THAN IN CONNECTION WITH A DEFINITELY RELATED GOVERNMENT PROCUREMENT OPERATION, THE UNITED STATES GOVERNMENT THEREBY INCURS NO RESPONSIBILITY NOR ANY OBLIGATION WHATSOEVER, AND THE FACT THAT THE GOVERNMENT MAY HAVE FORMULATED, FURNISHED, OR IN ANY WAY SUPPLIED THE SAID DRAWINGS, SPECIFICATIONS OR OTHER DATA IS NOT TO BE REGARDED BY IMPLICATION OR OTHERWISE AS IN ANY MANNER LICENSING THE HOLDER OR ANY OTHER PERSON OR CORPORATION, OR CONVEYING ANY RIGHTS OR PERMISSION TO MANUFACTURE, USE, OR SELL ANY PATENTED INVENTION THAT MAY IN ANY WAY BE RELATED THERETO.

REVISIONS			
SYM	DESCRIPTION	DATE	APPROVAL

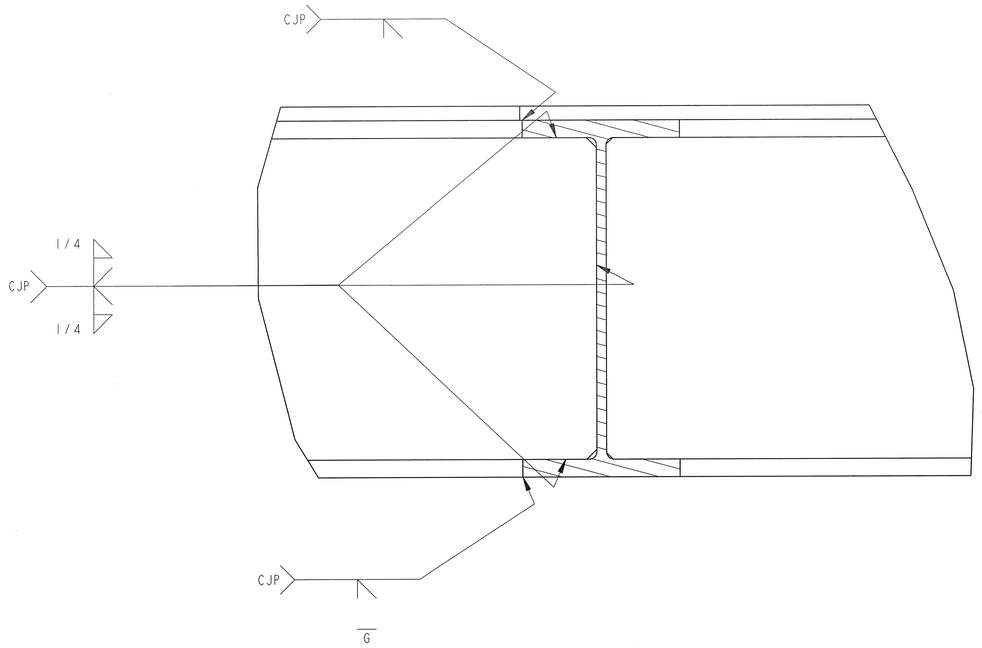

SECTION D-D 24X
SCALE 1/8
SHEET 1

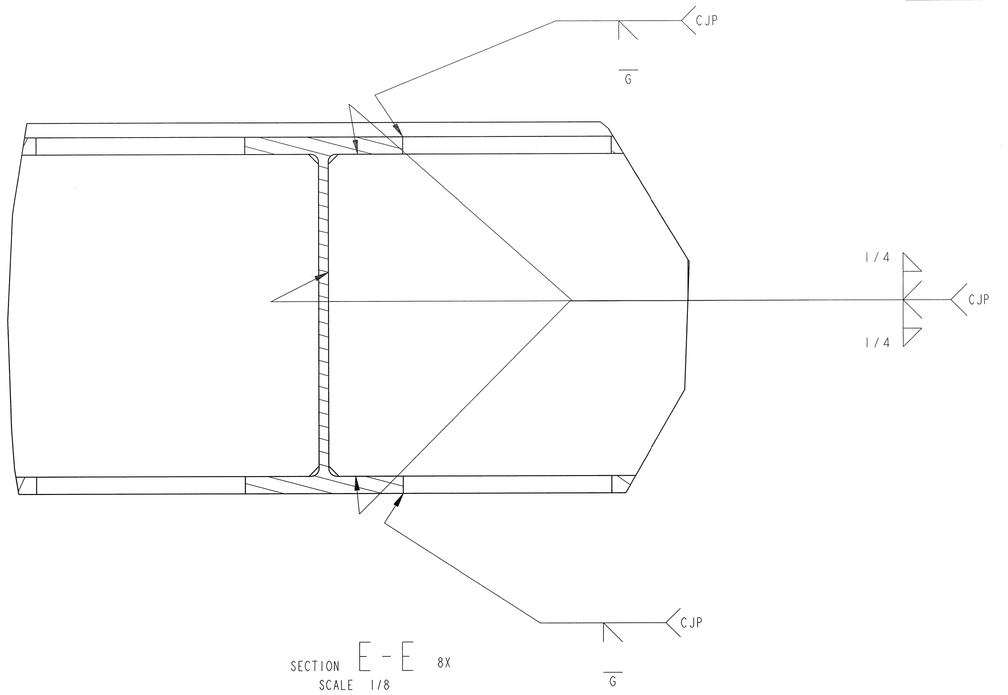

SECTION E-E 8X
SCALE 1/8
SHEET 1

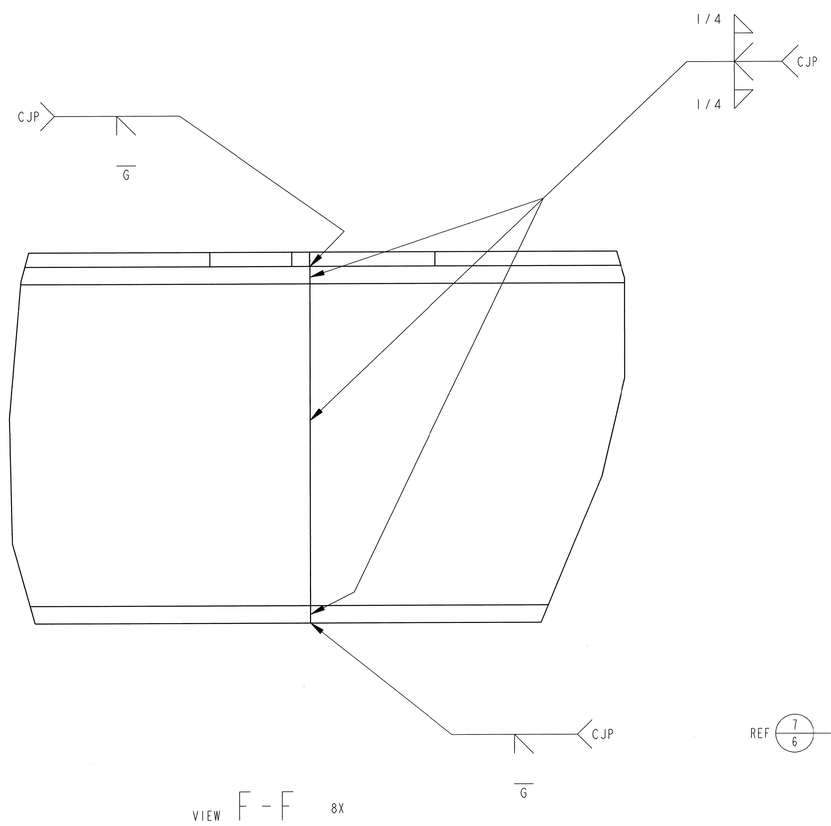

VIEW F-F 8X
SCALE 1/8
SHEET 1

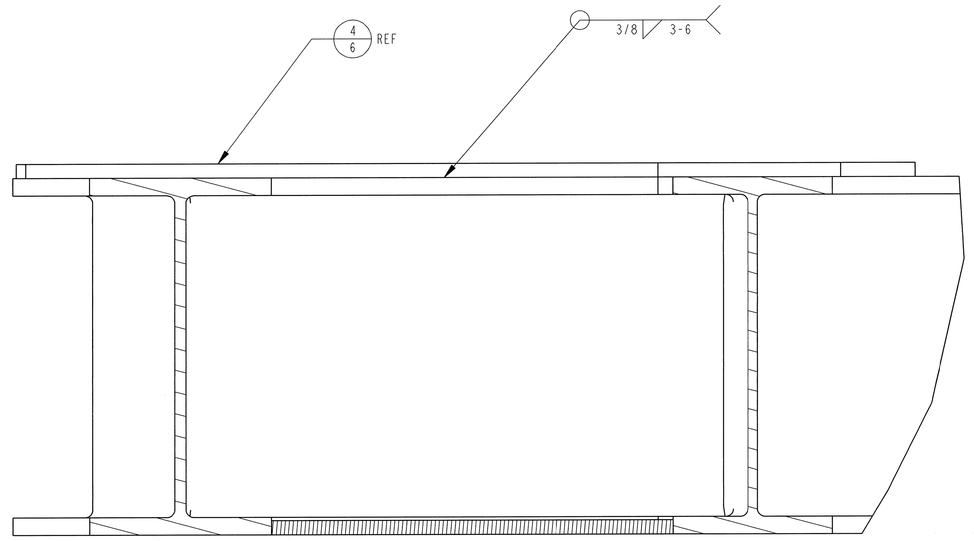

SECTION G-G 8X ALL PARTS NOT SHOWN FOR CLARITY.
SCALE 1/8
SHEET 1

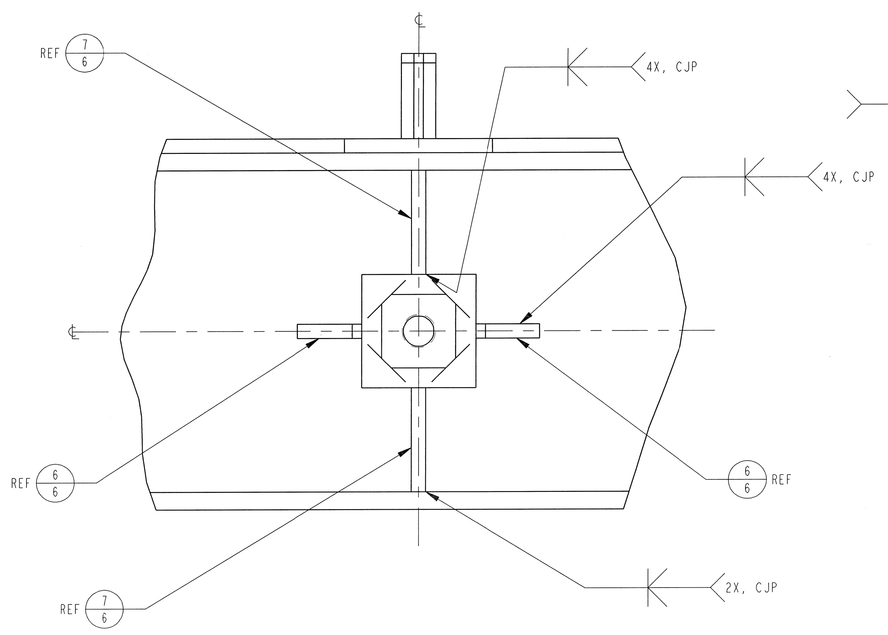

VIEW H-H 4X 16 17
SCALE 1/8
SHEET 1

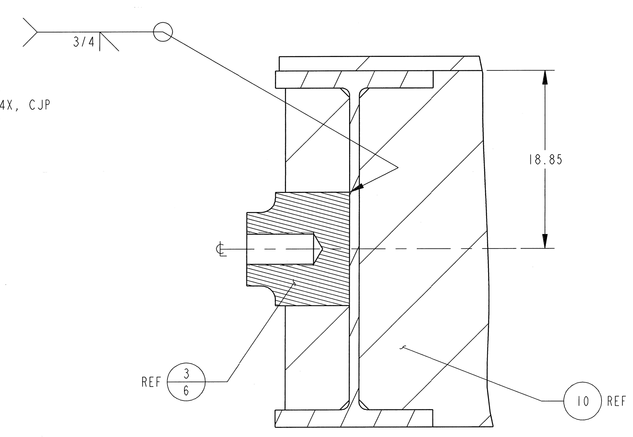

SECTION J-J 4X
SCALE 1/8
SHEET 1

APPROVED FOR PUBLIC RELEASE; DISTRIBUTION IS UNLIMITED

LOX & FS
LOWER SPIDER
ASSEMBLY
SLS LOX & FS TEST

SPECIAL TEST EQUIPMENT
DESIGN BRANCH - ET50
GEORGE C. MARSHALL
SPACE FLIGHT CENTER
NATIONAL AERONAUTICS
AND SPACE ADMINISTRATION
HUNTSVILLE, ALABAMA

90M14185 REVISION SEE SHT1

SIZE E SHEET 4 OF 6

NOTICE - WHEN GOVERNMENT DRAWINGS, SPECIFICATIONS, OR OTHER DATA ARE USED FOR ANY PURPOSE OTHER THAN IN CONNECTION WITH A DEFINITELY RELATED GOVERNMENT PROCUREMENT OPERATION, THE UNITED STATES GOVERNMENT THEREBY INCURS NO RESPONSIBILITY NOR ANY OBLIGATION WHATSOEVER; AND THE FACT THAT THE GOVERNMENT MAY HAVE FORMULATED, FURNISHED, OR IN ANY WAY SUPPLIED THE SAID DRAWINGS, SPECIFICATIONS OR OTHER DATA IS NOT TO BE REGARDED BY IMPLICATION OR OTHERWISE AS IN ANY MANNER LICENSING THE HOLDER OR ANY OTHER PERSON OR CORPORATION, OR CONVEYING ANY RIGHTS OR PERMISSION TO MANUFACTURE, USE, OR SELL ANY PATENTED INVENTION THAT MAY IN ANY WAY BE RELATED THERETO.

REVISIONS			
SYM	DESCRIPTION	DATE	APPROVAL

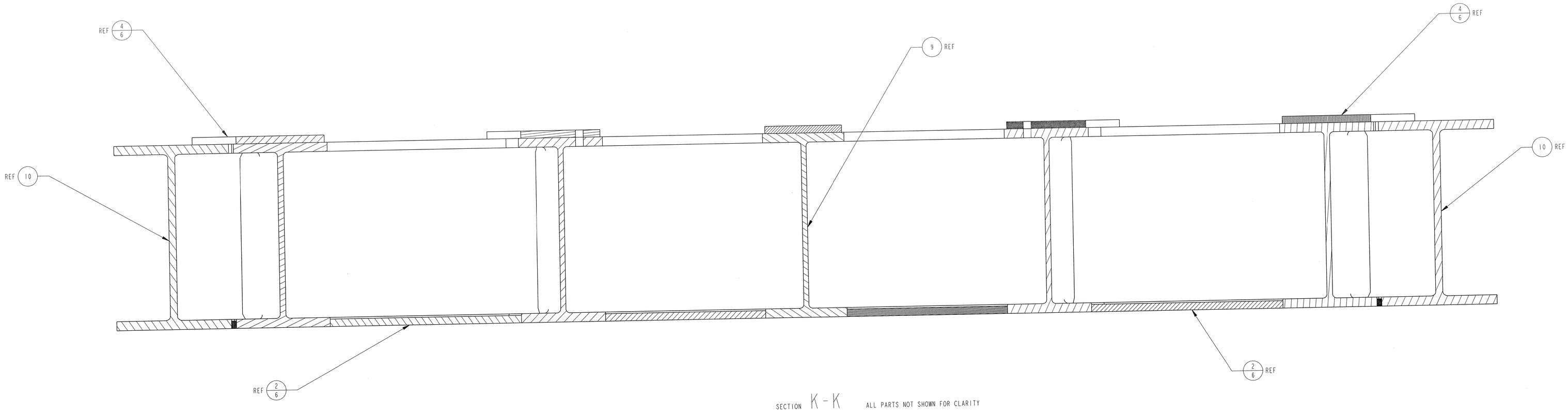

SECTION K - K ALL PARTS NOT SHOWN FOR CLARITY
SCALE 1/8
SHEET 1

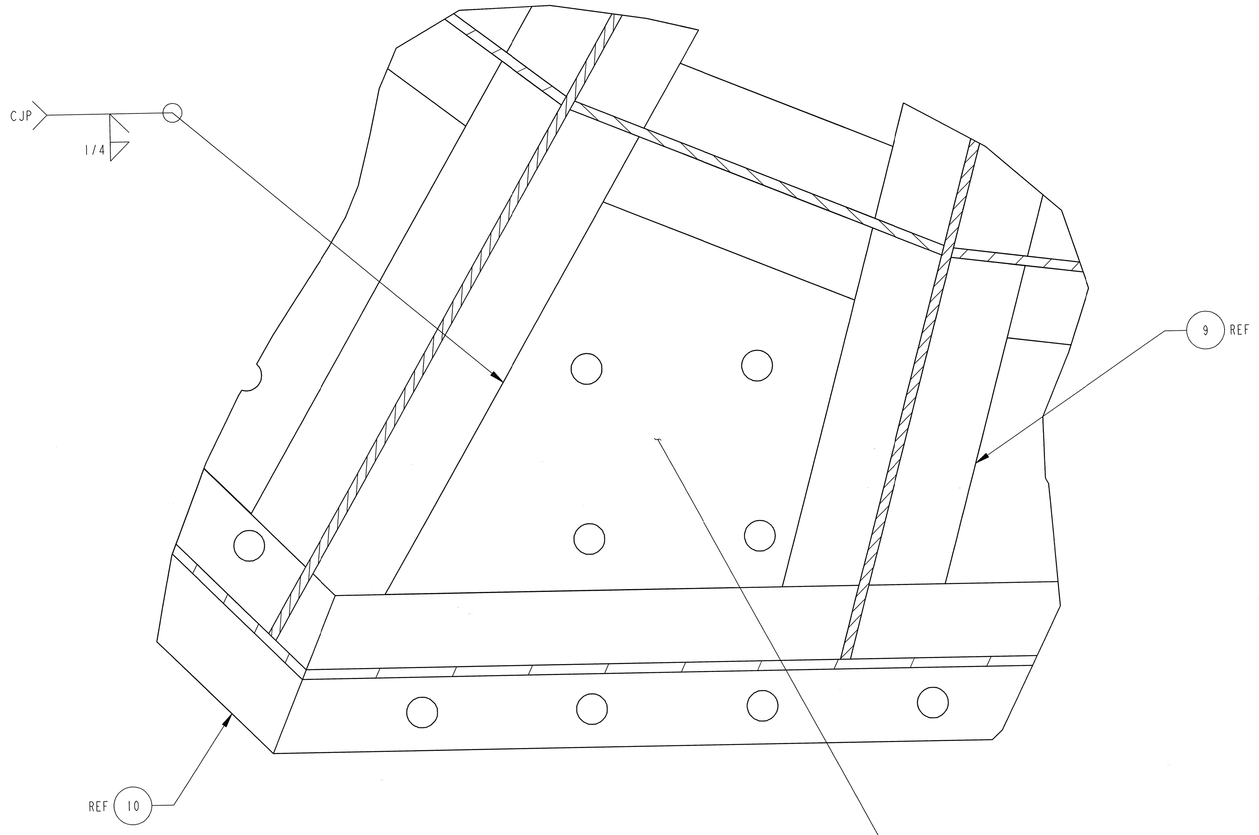

SECTION L - L 8X
SCALE 1/8
SHEET 1

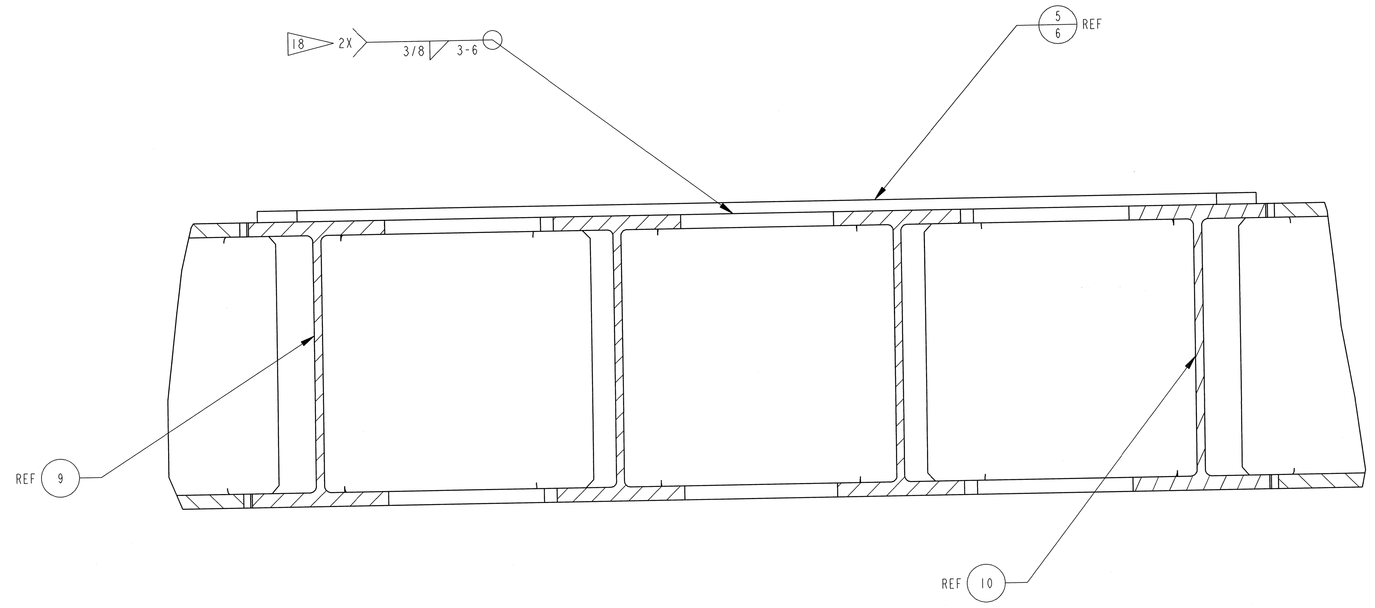

SECTION M - M 8X ALL PARTS NOT SHOWN FOR CLARITY
SCALE 1/10
SHEET 1

APPROVED FOR PUBLIC RELEASE; DISTRIBUTION IS UNLIMITED

LOX & FS
LOWER SPIDER
ASSEMBLY
SLS LOX & FS TEST

SPECIAL TEST EQUIPMENT
DESIGN BRANCH - ET50
GEORGE C. MARSHALL
SPACE FLIGHT CENTER
NATIONAL AERONAUTICS
AND SPACE ADMINISTRATION
HUNTSVILLE, ALABAMA

90M14185 REVISION SEE SHT1

SIZE E SHEET 5 OF 6

NOTICE - WHEN GOVERNMENT DRAWINGS, SPECIFICATIONS, OR OTHER DATA ARE USED FOR ANY PURPOSE OTHER THAN IN CONNECTION WITH A DEFINITELY RELATED GOVERNMENT PROCUREMENT OPERATION, THE UNITED STATES GOVERNMENT THEREBY INCURS NO RESPONSIBILITY NOR ANY OBLIGATION WHATSOEVER, AND THE FACT THAT THE GOVERNMENT MAY HAVE FORMULATED, FURNISHED, OR IN ANY WAY SUPPLIED THE SAID DRAWINGS, SPECIFICATIONS OR OTHER DATA IS NOT TO BE REGARDED BY IMPLICATION OR OTHERWISE AS IN ANY MANNER LICENSING THE HOLDER OR ANY OTHER PERSON OR CORPORATION, OR CONVEYING ANY RIGHTS OR PERMISSION TO MANUFACTURE, USE, OR SELL ANY PATENTED INVENTION THAT MAY IN ANY WAY BE RELATED THERETO.

REVISIONS			
SYM	DESCRIPTION	DATE	APPROVAL

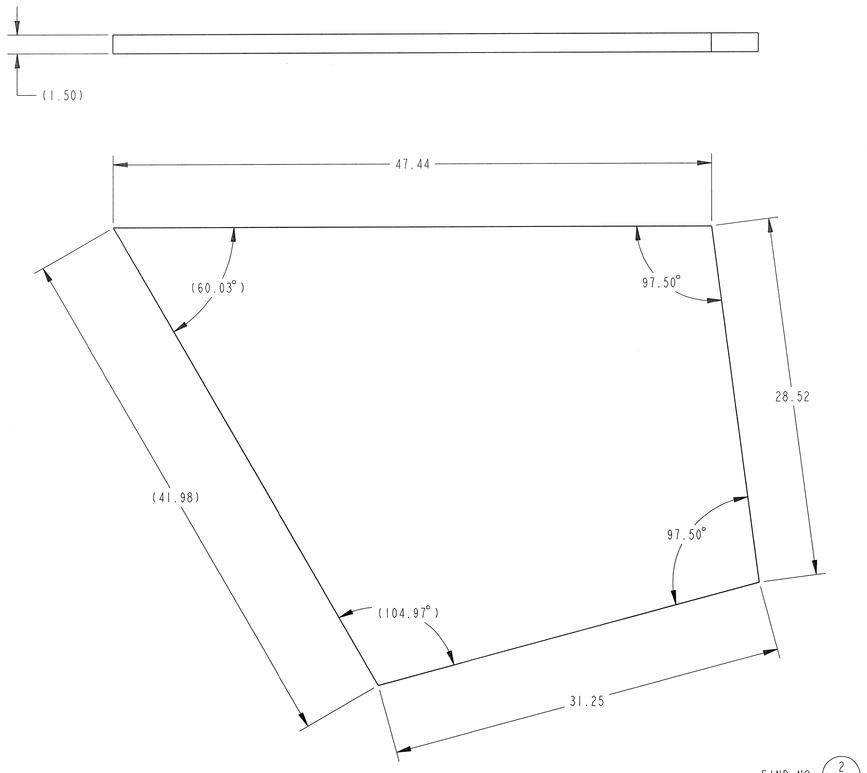

FIND NO. 2/1

SCALE 1/6

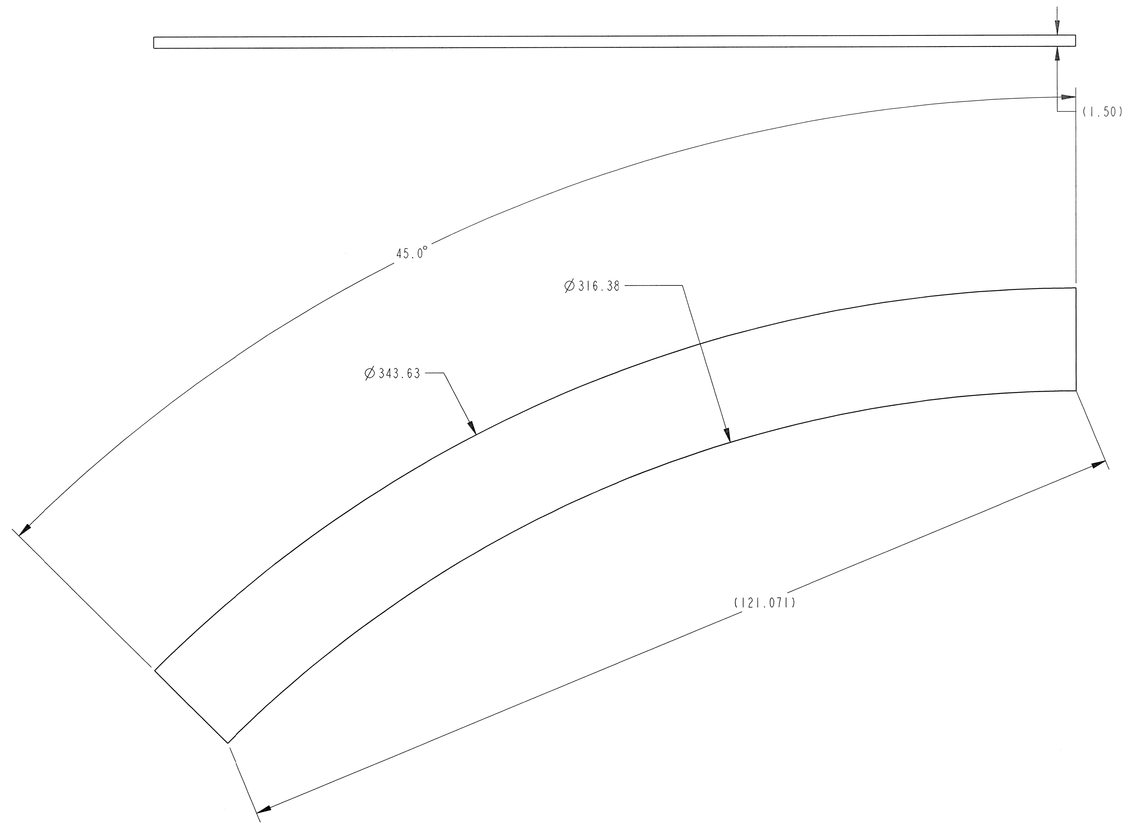

FIND NO. 5/1

SCALE 1/10

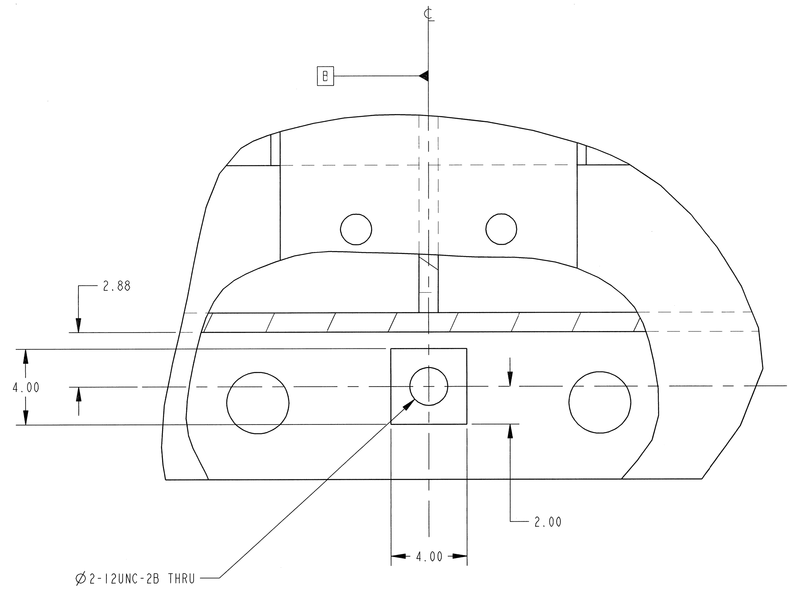

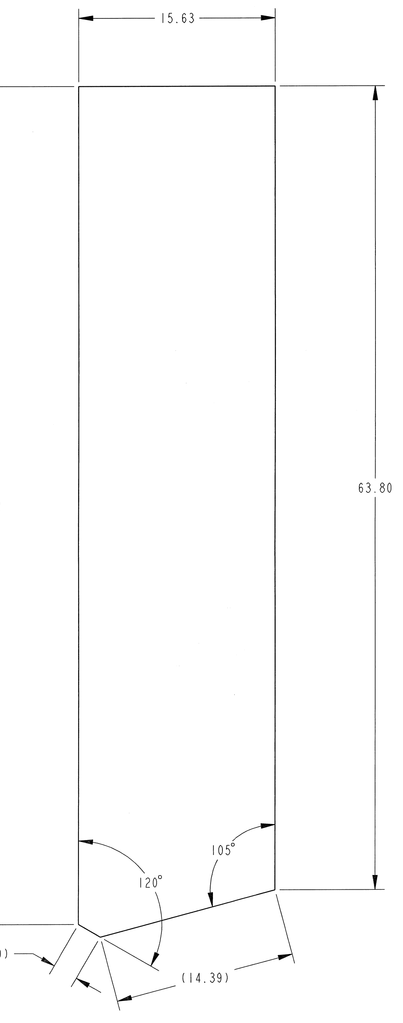

FIND NO. 4/1

SCALE 1/6

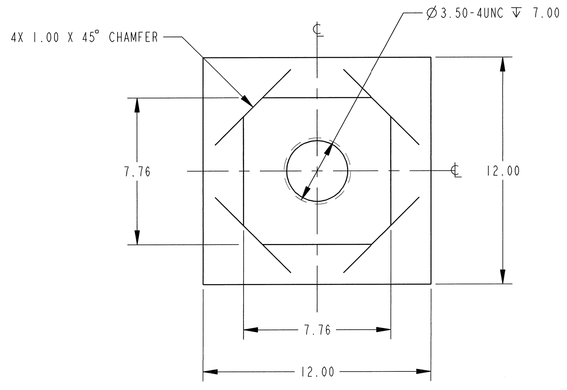

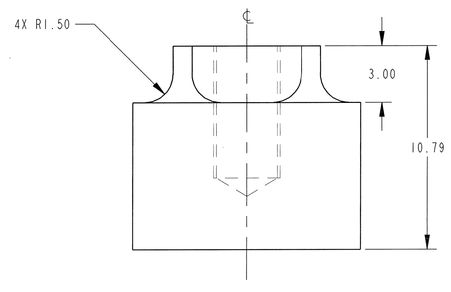

FIND NO. 3/1 16

SCALE 1/4

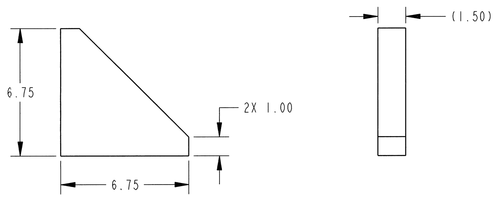

FIND NO. 7/1

SCALE 1/4

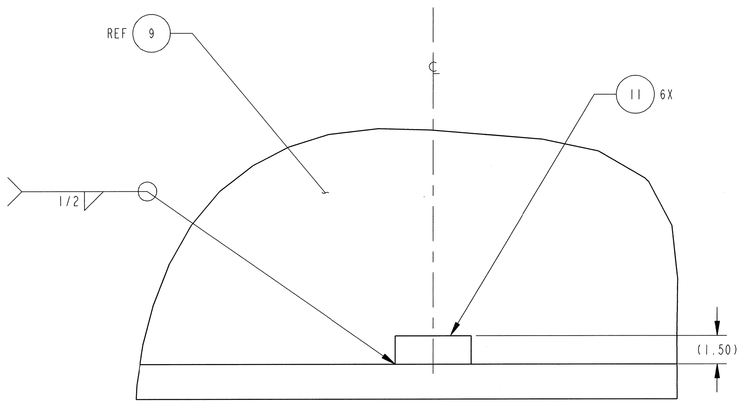

DETAIL N 6X 60° APART

SCALE 1/4

SHEET 1

ALL PARTS NOT SHOWN FOR CLARITY

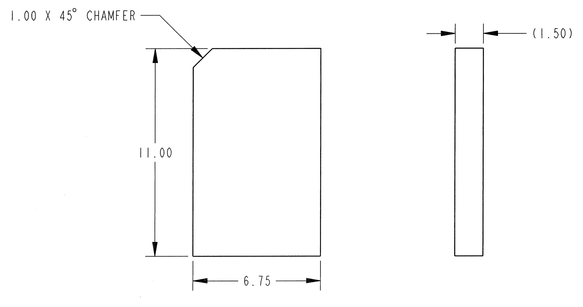

FIND NO. 6/1

SCALE 1/4

APPROVED FOR PUBLIC RELEASE; DISTRIBUTION IS UNLIMITED

LOX & FS LOWER SPIDER ASSEMBLY SLS LOX & FS TEST	SPECIAL TEST EQUIPMENT DESIGN BRANCH - ET50 GEORGE C. MARSHALL SPACE FLIGHT CENTER NATIONAL AERONAUTICS AND SPACE ADMINISTRATION HUNTSVILLE, ALABAMA 90M14185 REVISION SEE SHT1 DRWG SIZE E SHEET 6 OF 6

NOTICE - WHEN GOVERNMENT DRAWINGS, SPECIFICATIONS, OR OTHER DATA ARE USED FOR ANY PURPOSE OTHER THAN IN CONNECTION WITH A DEFINITELY RELATED GOVERNMENT PROCUREMENT OPERATION, THE UNITED STATES GOVERNMENT THEREBY INCURS NO RESPONSIBILITY NOR ANY OBLIGATION WHATSOEVER, AND THE FACT THAT THE GOVERNMENT MAY HAVE FORMULATED, FURNISHED, OR IN ANY WAY SUPPLIED THE SAID DRAWINGS, SPECIFICATIONS OR OTHER DATA IS NOT TO BE REGARDED BY IMPLICATION OR OTHERWISE AS IN ANY MANNER LICENSING THE HOLDER OR ANY OTHER PERSON OR CORPORATION, OR CONVEYING ANY RIGHTS OR PERMISSION TO MANUFACTURE, USE, OR SELL ANY PATENTED INVENTION THAT MAY IN ANY WAY BE RELATED THERETO.

REVISIONS			
SYM	DESCRIPTION	DATE	APPROVAL

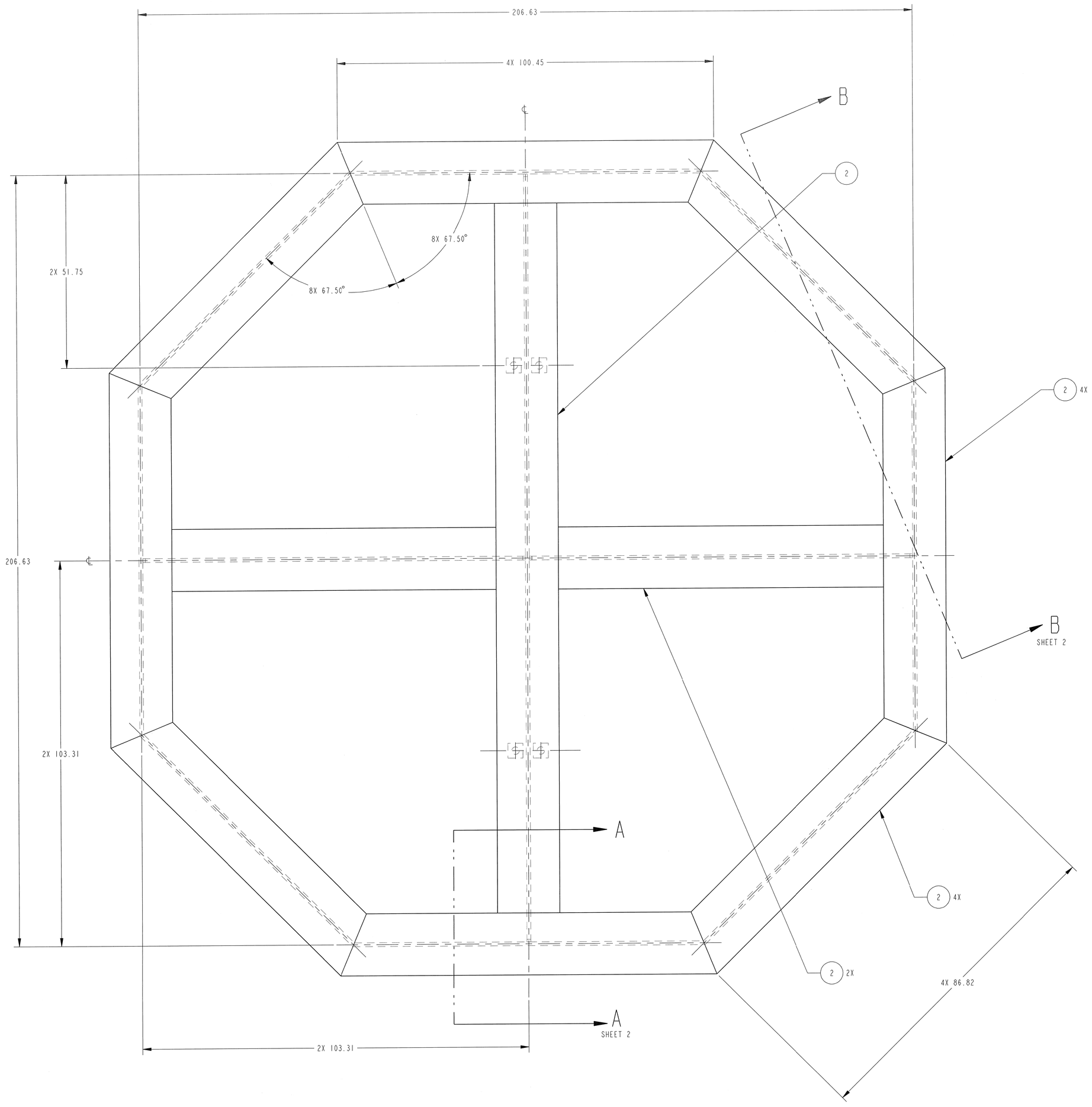

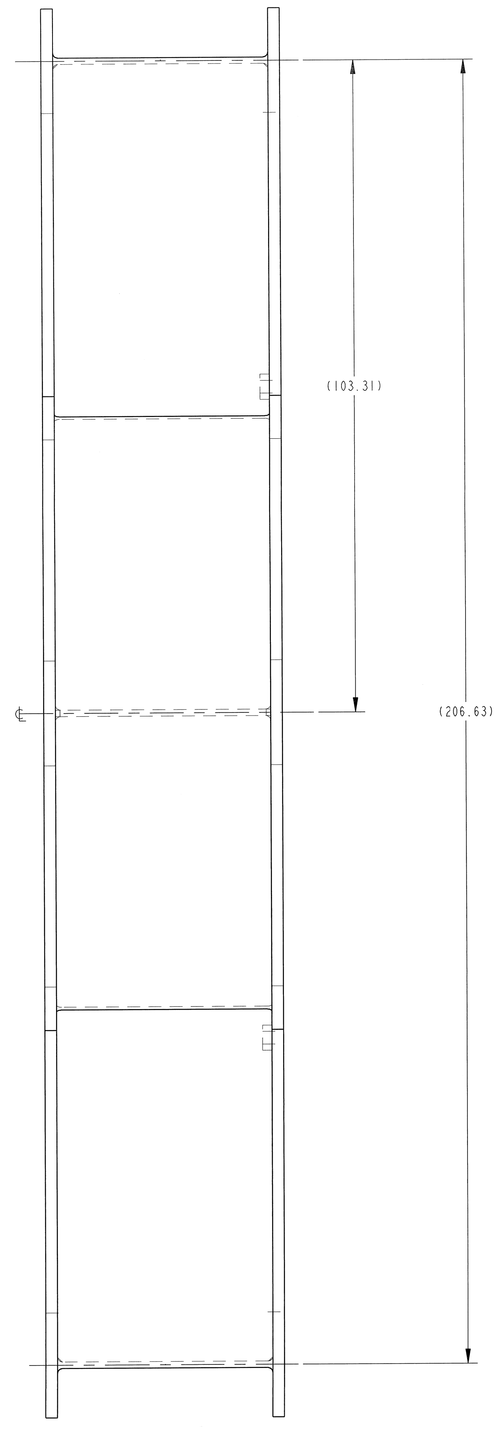

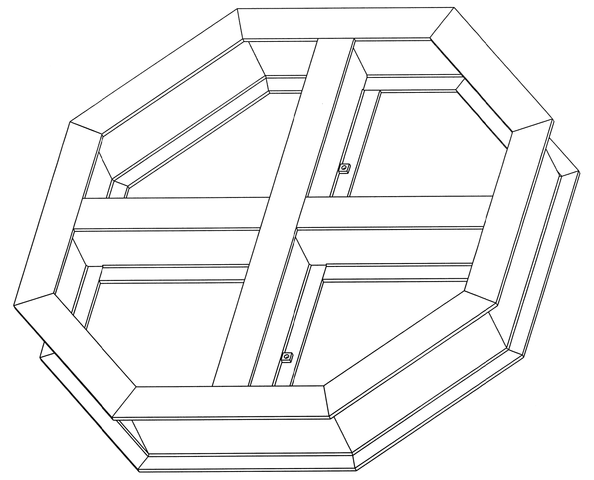

ISOMETRIC VIEW
FOR REFERENCE ONLY

GENERAL NOTES:

1. REMOVE ALL BURRS AND BREAK ALL SHARP EDGES.
2. COPE TO FIT AS REQUIRED.
3. ALL STRUCTURAL STEEL SHAPES SHALL CONFORM TO THE DESIGNATIONS AND DIMENSIONS OF THE 14TH EDITION AISC "STEEL CONSTRUCTION MANUAL".
4. STEEL WELDING DESIGN, PROCEDURES, AND NON-DESTRUCTIVE EVALUATION SHALL BE PER ANSI/AWS D1.1/D1.1M. "STRUCTURAL WELDING CODE-STEEL" AND CURRENT AS OF THE RELEASE DATE OF THIS DRAWING. UTILIZE WELDING PRACTICES AND TECHNIQUES TO MINIMIZE DISTORTION. UNLESS OTHERWISE SPECIFIED, WELDS SHALL BE 100% VISUALLY INSPECTTED.
5. 125√ ALL MACHINED SURFACES UNLESS OTHERWISE NOTED.
6. DIMENSIONING AND TOLERANCING IN ACCORDANCE WITH ASME Y14.5-1994.

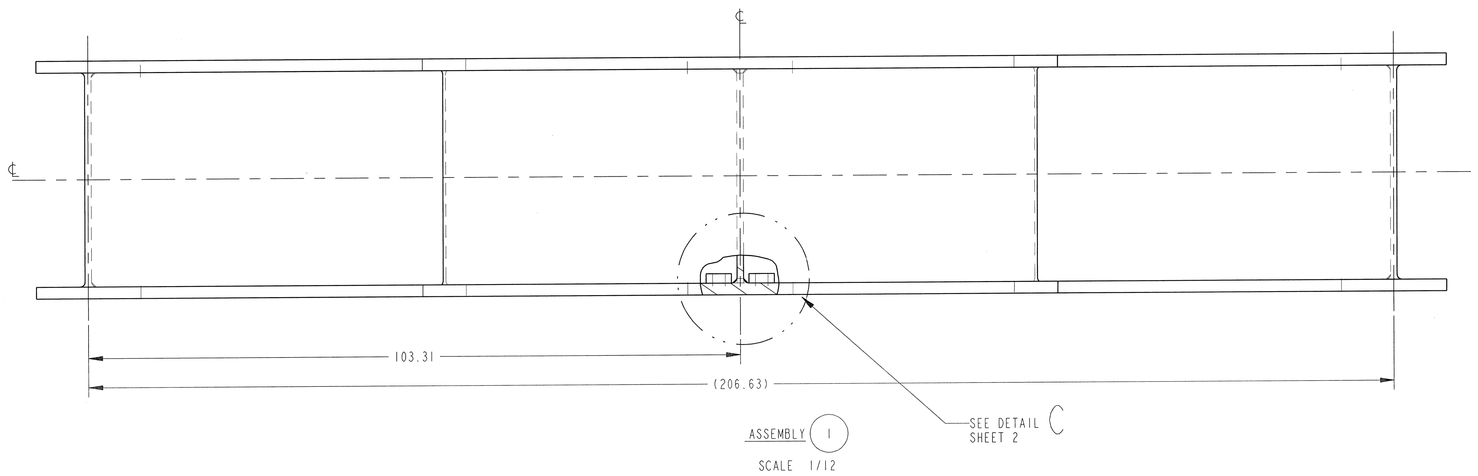

ASSEMBLY 1
SCALE 1/12

APPROVED FOR PUBLIC RELEASE; DISTRIBUTION IS UNLIMITED

FIND NO.	CALLOUT SHT NO.	DETAIL SHT NO.	TOT REQ'D		PART NO.	DESCRIPTION	VEND NO.	REMARKS
3	2	-	A/R	P	90M14186-5	1.5" THICK PLATE, LEVELING SCREW FLANGE DOUBLER PLATE		MAT'L: ASTM A572 GRADE 50
2	1	-	A/R	P	90M14186-2	W36X330		MAT'L: ASTM A992 STL
1	1	-	-	A	90M14186-1	LOWER SPIDER INNER RING SUB-ASSEMBLY LOX/FS		

A=ASSEMBLY/INSTALLATION E=EXISTING F=FABRICATED ITEM M=MODIFIED ITEM P=PURCHASED ITEM

STRESS	Mark Davis 2-6-14	PROGRAM MANAGER	02/06/2014
MATERIALS	Richard Lamb 2-6-14	TEST ENGINEERING LEAD	2/6/14
INDUSTRIAL SAFETY	Alvin Eaton 2/6/14	ETSD TECHNICAL DESIGN LEAD	2/6/2014
SAFETY AND MISSION ASSURANCE	Jeanna Miller 2/6/14	ETSD CIVIL DESIGN LEAD	2/6/2014
SEE INC. TEST CONDUCTOR	2/6/14	ETSD TECHNICAL DESIGN LEAD	2/6/2014
PRESSURE CERTIFICATION MANAGER		ETSD TECHNICAL DESIGN LEAD	2/07/14

UNLESS OTHERWISE SPECIFIED
TOLERANCES ARE
FRACTIONS: ± 1/16 ± 1/2°
DECIMALS: .X- ± .06; .XX- ± .03; .XXX- ± .010; ∠- ± .50°
(DIMENSIONS ARE IN INCHES, DO NOT SCALE DRAWING)

DRAWN BY	NEXT ASSEMBLY	DATE
MEAGAN JOHNSON	90M14185	09-11-13

LOWER SPIDER
INNER RING
SUB-ASSEMBLY
LOX/FS
SLS LOX & FS TEST

SPECIAL TEST EQUIPMENT
DESIGN BRANCH - ET50
GEORGE C. MARSHALL
SPACE FLIGHT CENTER
NATIONAL AERONAUTICS
AND SPACE ADMINISTRATION
HUNTSVILLE, ALABAMA

90M14186 REVISION ~

DWG SIZE E SHEET 1 OF 2

NOTICE - WHEN GOVERNMENT DRAWINGS, SPECIFICATIONS, OR OTHER DATA ARE USED FOR ANY PURPOSE OTHER THAN IN CONNECTION WITH A DEFINITELY RELATED GOVERNMENT PROCUREMENT OPERATION, THE UNITED STATES GOVERNMENT THEREBY INCURS NO RESPONSIBILITY NOR ANY OBLIGATION WHATSOEVER, AND THE FACT THAT THE GOVERNMENT MAY HAVE FORMULATED, FURNISHED, OR IN ANY WAY SUPPLIED THE SAID DRAWINGS, SPECIFICATIONS OR OTHER DATA IS NOT TO BE REGARDED BY IMPLICATION OR OTHERWISE AS IN ANY MANNER LICENSING THE HOLDER OR ANY OTHER PERSON OR CORPORATION, OR CONVEYING ANY RIGHTS OR PERMISSION TO MANUFACTURE, USE, OR SELL ANY PATENTED INVENTION THAT MAY IN ANY WAY BE RELATED THERETO.

REVISIONS			
SYM	DESCRIPTION	DATE	APPROVAL

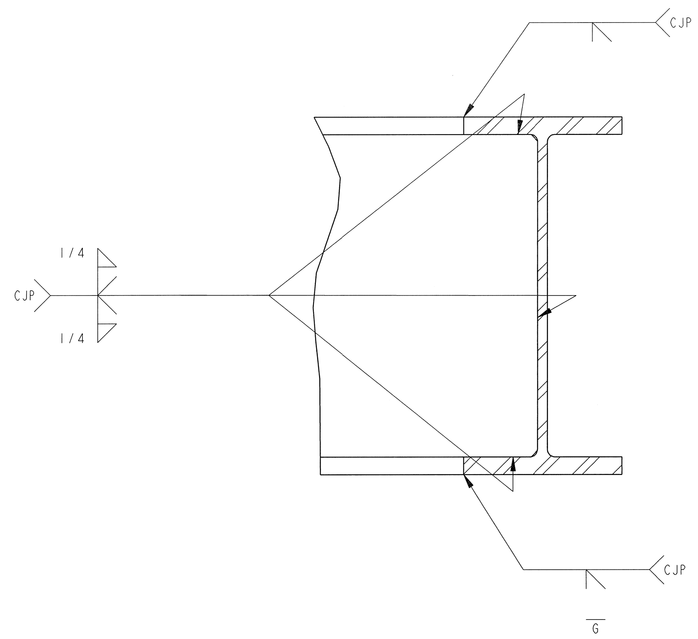

SECTION A - A 6X
SCALE 1/8
SHEET 1

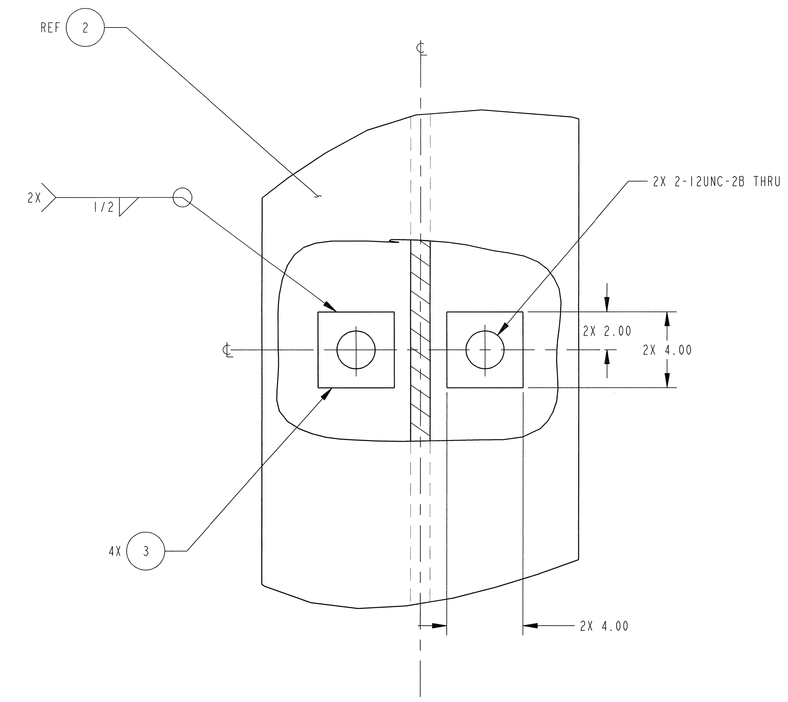

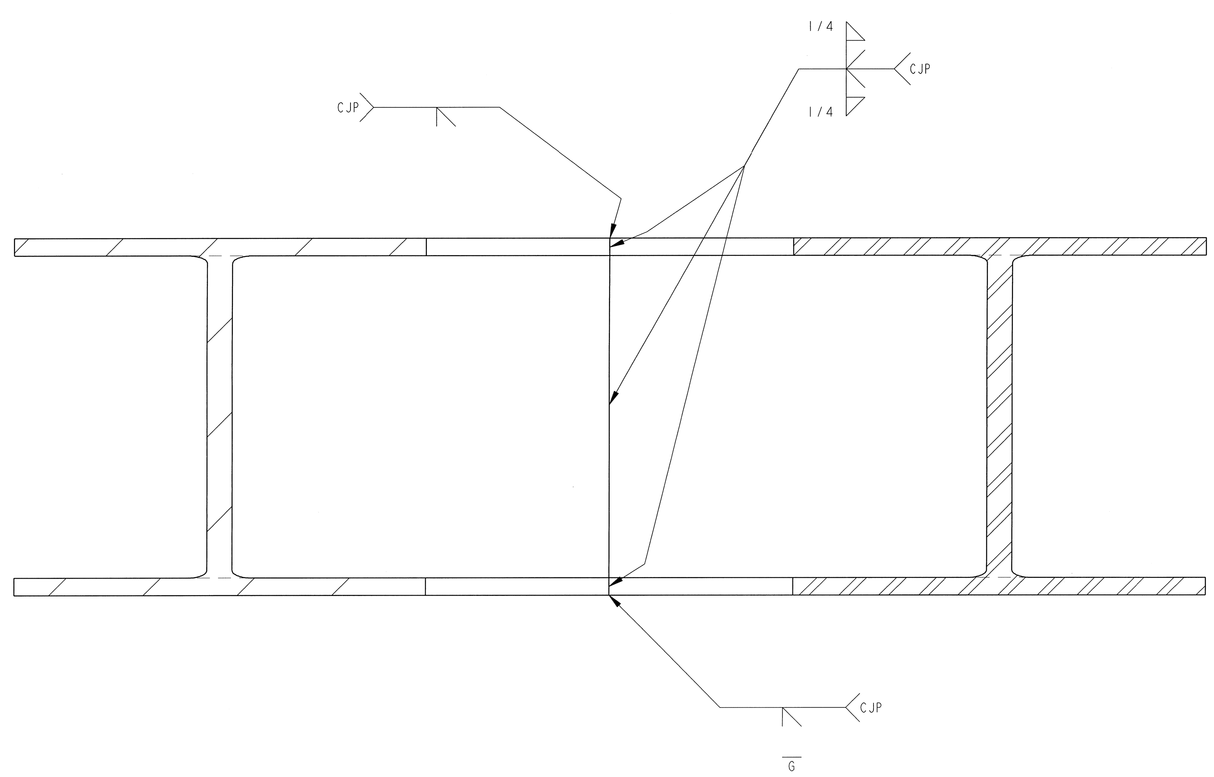

SECTION B - B 8X
SCALE 1/8
SHEET 1

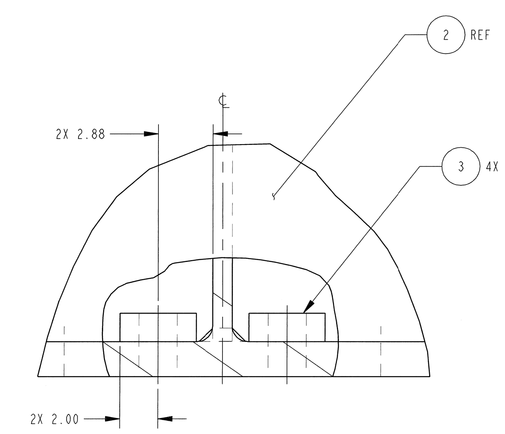

DETAIL C
SCALE: 1/4
SHEET 1, 2X

APPROVED FOR PUBLIC RELEASE; DISTRIBUTION IS UNLIMITED

LOWER SPIDER
INNER RING
SUB-ASSEMBLY
LOX/FS
SLS LOX & FS TEST

SPECIAL TEST EQUIPMENT
DESIGN BRANCH - ET50
GEORGE C. MARSHALL
SPACE FLIGHT CENTER
NATIONAL AERONAUTICS
AND SPACE ADMINISTRATION
HUNTSVILLE, ALABAMA

90M14186 REVISION SEE SHT1

DWG SIZE E SHEET 2 OF 2

NOTICE - WHEN GOVERNMENT DRAWINGS, SPECIFICATIONS, OR OTHER DATA ARE USED FOR ANY PURPOSE OTHER THAN IN CONNECTION WITH A DEFINITELY RELATED GOVERNMENT PROCUREMENT OPERATION, THE UNITED STATES GOVERNMENT THEREBY INCURS NO RESPONSIBILITY NOR ANY OBLIGATION WHATSOEVER, AND THE FACT THAT THE GOVERNMENT MAY HAVE FORMULATED, FURNISHED, OR IN ANY WAY SUPPLIED THE SAID DRAWINGS, SPECIFICATIONS, OR OTHER DATA IS NOT TO BE REGARDED BY IMPLICATION OR OTHERWISE AS IN ANY MANNER LICENSING THE HOLDER OR ANY OTHER PERSON OR CORPORATION, OR CONVEYING ANY RIGHTS OR PERMISSION TO MANUFACTURE, USE, OR SELL ANY PATENTED INVENTION THAT MAY IN ANY WAY BE RELATED THERETO.

REVISIONS			
SYM	DESCRIPTION	DATE	APPROVAL

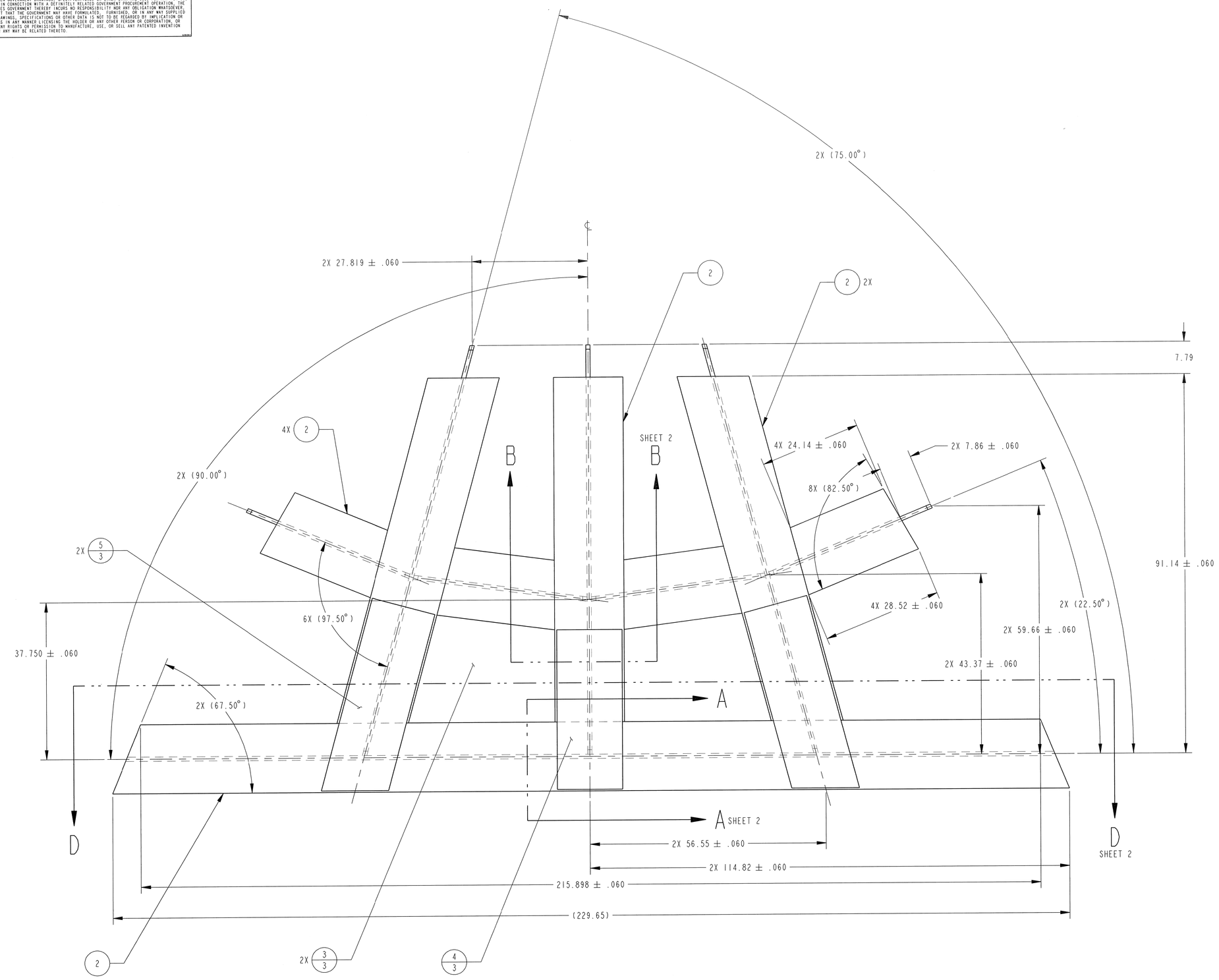

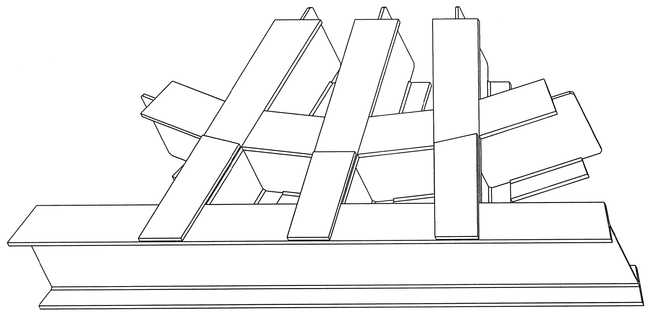

ISOMETRIC VIEW
FOR REFERENCE ONLY

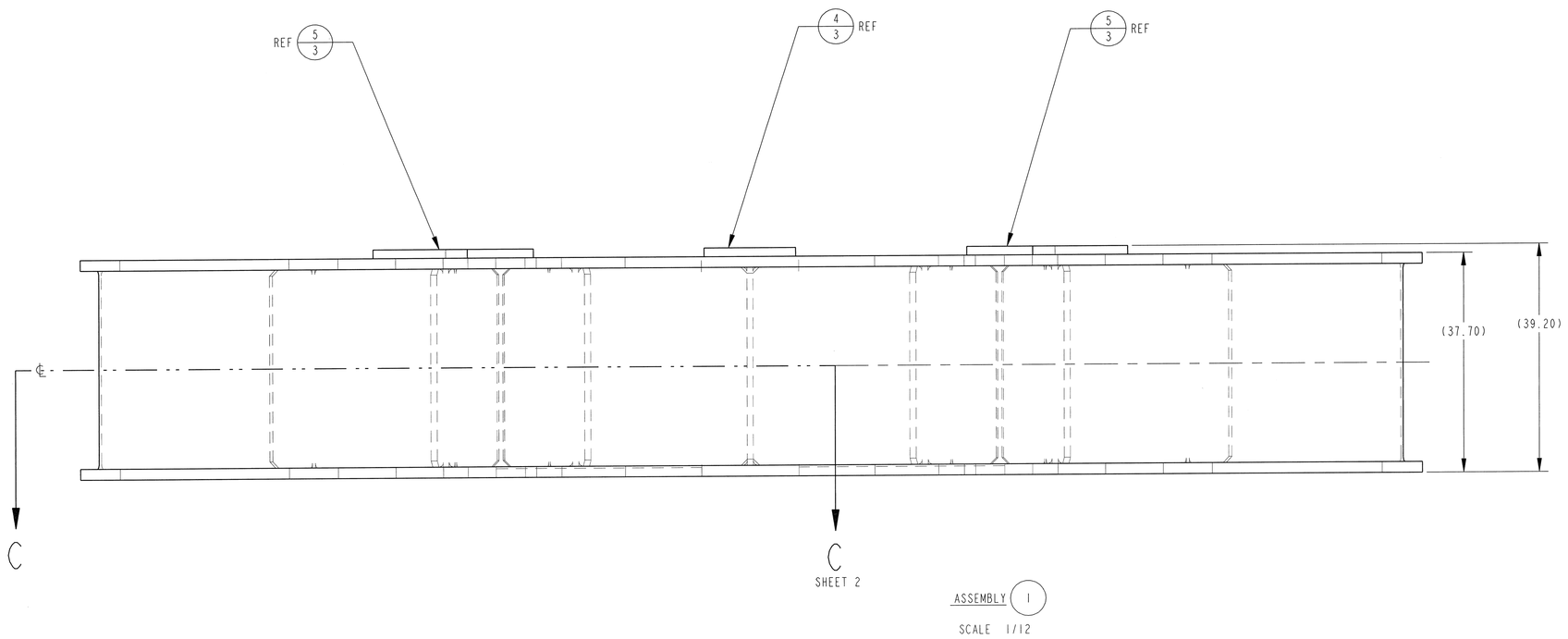

ASSEMBLY 1
SCALE 1/12

GENERAL NOTES:

1. REMOVE ALL BURRS AND BREAK ALL SHARP EDGES.
2. COPE TO FIT AS REQUIRED.
3. ALL STRUCTURAL STEEL SHAPES SHALL CONFORM TO THE DESIGNATIONS AND DIMENSIONS OF THE 14TH EDITION AISC "STEEL CONSTRUCTION MANUAL".
4. STEEL WELDING DESIGN, PROCEDURES, AND NON-DESTRUCTIVE EVALUATION SHALL BE PER ANSI/AWS D1.1/D1.1M: "STRUCTURAL WELDING CODE-STEEL" AND CURRENT AS OF THE RELEASE DATE OF THIS DRAWING. UTILIZE WELDING PRACTICES AND TECHNIQUES TO MINIMIZE DISTORTION. UNLESS OTHERWISE SPECIFIED, WELDS SHALL BE 100% VISUALLY INSPECTED.
5. DIMENSIONING AND TOLERANCING IN ACCORDANCE WITH ASME Y14.5M-1994.
6. 125 ALL MACHINED SURFACES UNLESS OTHERWISE NOTED.

APPROVED FOR PUBLIC RELEASE; DISTRIBUTION IS UNLIMITED

FIND NO.	CALLOUT SHT NO.	DETAIL SHT NO.	TOT REQ'D		PART NO.	DESCRIPTION	VEND NO.	REMARKS
5	1	3	2	F	90M14187-5	1.5" THICK PLATE		MAT'L: ASTM A572 GRADE 50
4	1	3	1	F	90M14187-4	1.5" THICK PLATE		MAT'L: ASTM A572 GRADE 50
3	1	3	2	F	90M14187-3	1.5" THICK PLATE		MAT'L: ASTM A572 GRADE 50
2	1	-	A/R	P	90M14187-2	W36X330		MAT'L: ASTM A992
1	1	-	-	A	90M14187-1	LOWER SPIDER OUTER PERIMETER SUB-ASSEMBLY LOX/FS		

A=ASSEMBLY/INSTALLATION E=EXISTING F=FABRICATED ITEM M=MODIFIED ITEM P=PURCHASED ITEM

STRUCTURES	Mark Dan 2-6-14	PROGRAM MANAGER	02/06/2014
MECHANICS	Richard Frank 2-6-14	TEST PROJECT MANAGER	2/6/2014
INDUSTRIAL ENGR	Arif Ender 2/6/14	STRUCTURAL DESIGN LEAD	Meagan M Johnson 2/6/2014
QA/S&MA REPRESENTATIVE	Donna Miller 2/6/14	TEST CONDUCTOR	2/6/2014
METAL TEST CONDUCTOR	2/6/14	TEST ENGINEER	2/6/2014
PRESSURE CERTIFICATION MANAGER		STRUCTURES CHECKSTAR LEAD	Lee D. Davis 2/07/14

UNLESS OTHERWISE SPECIFIED
TOLERANCES ARE -
FRACTIONS: ± 1/16 ± 1/2
DECIMALS: X- ± .06; XX- ± .03; .XXX- ± .010; ∠- ± 30'
(DIMENSIONS ARE IN INCHES, DO NOT SCALE DRAWING)

DRAWN BY	NEXT ASSEMBLY	DATE
MEAGAN JOHNSON	90M14185	09-13-13

LOWER SPIDER OUTER PERIMETER SUB-ASSEMBLY LOX/FS SLS LOX & FS TEST

SPECIAL TEST EQUIPMENT DESIGN BRANCH - ET50
GEORGE C. MARSHALL SPACE FLIGHT CENTER
NATIONAL AERONAUTICS AND SPACE ADMINISTRATION
HUNTSVILLE, ALABAMA

90M14187 REVISION ~

SIZE E SHEET 1 OF 3

APPROVED FOR PUBLIC RELEASE; DISTRIBUTION IS UNLIMITED

LOWER SPIDER
OUTER PERIMETER
SUB-ASSEMBLY
LOX/FS
SLS LOX 8 FS TEST

SPECIAL TEST EQUIPMENT	
BEIJOR BRANCH - E130	
GEORGE C. MARSHALL	
SPACE FLIGHT CENTER	
NATIONAL AERONAUTICS AND SPACE ADMINISTRATION	
HUNTSVILLE, ALABAMA	

SIZE	DWG	REVISION
E	90M14187	SEE SHT 1
SHEET 3	OF 3	

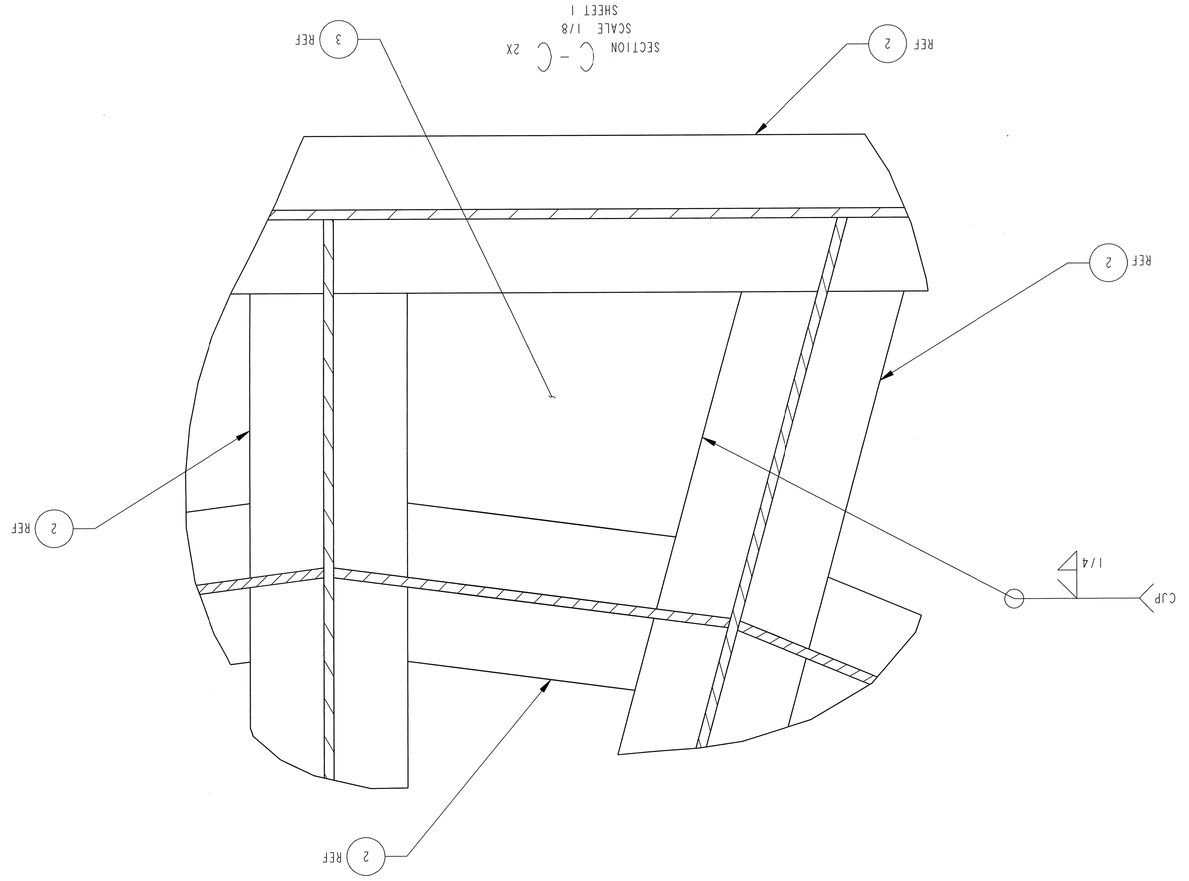

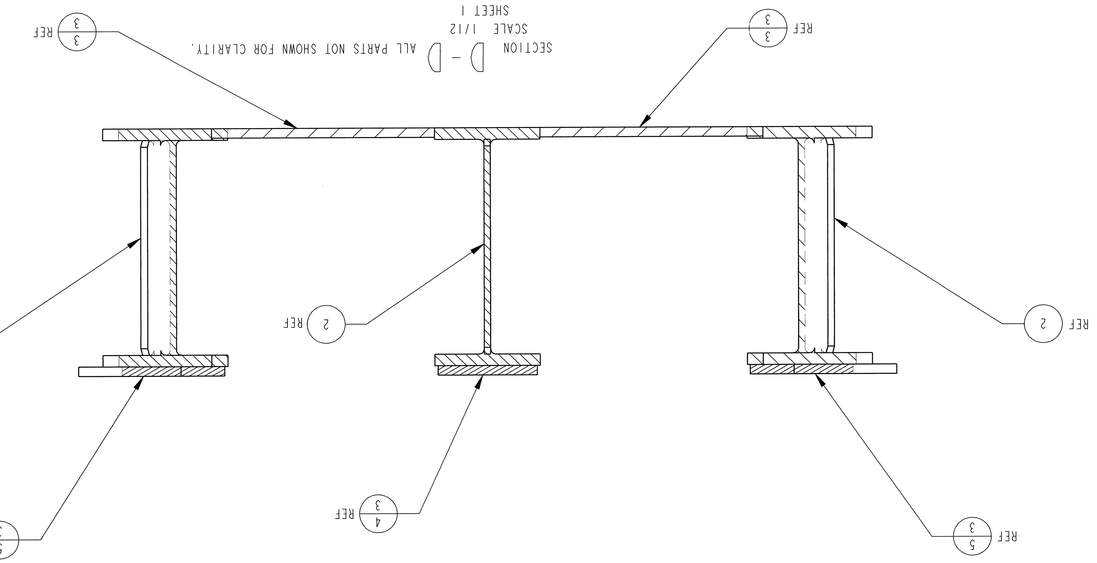

REVISIONS			
SYM	DESCRIPTION	DATE	APPROVAL

NOTES - MAIN DIMENSION BEING INCHES. SPECIFICATIONS DO EXIST DATA ARE AVAILABLE FOR ANY PARTICULAR DIMENSION OR DIMENSIONS AS THE MANUFACTURER HAS NOTED ON ANY DRAWING IN ORDER TO OBTAIN OPTIMUM PERFORMANCE. SPECIFICATIONS OR DATA IN ANY SUCH DRAWING, SPECIFICATIONS OR ANY MATERIAL SUPPLIED BY THE MANUFACTURER SHALL NOT BE REPRODUCED, USED, OR DISCLOSED FOR ANY PURPOSE EXCEPT WITH WRITTEN PERMISSION OF THE MANUFACTURER.

NOTICE - WHEN GOVERNMENT DRAWINGS, SPECIFICATIONS, OR OTHER DATA ARE USED FOR ANY PURPOSE OTHER THAN IN CONNECTION WITH A DEFINITELY RELATED GOVERNMENT PROCUREMENT OPERATION, THE UNITED STATES GOVERNMENT THEREBY INCURS NO RESPONSIBILITY NOR ANY OBLIGATION WHATSOEVER; AND THE FACT THAT THE GOVERNMENT MAY HAVE FORMULATED, FURNISHED, OR IN ANY WAY SUPPLIED THE SAID DRAWINGS, SPECIFICATIONS OR OTHER DATA IS NOT TO BE REGARDED BY IMPLICATION OR OTHERWISE AS IN ANY MANNER LICENSING THE HOLDER OR ANY OTHER PERSON OR CORPORATION, OR CONVEYING ANY RIGHTS OR PERMISSION TO MANUFACTURE, USE, OR SELL ANY PATENTED INVENTION THAT MAY IN ANY WAY BE RELATED THERETO.

REVISIONS			
SYM	DESCRIPTION	DATE	APPROVAL

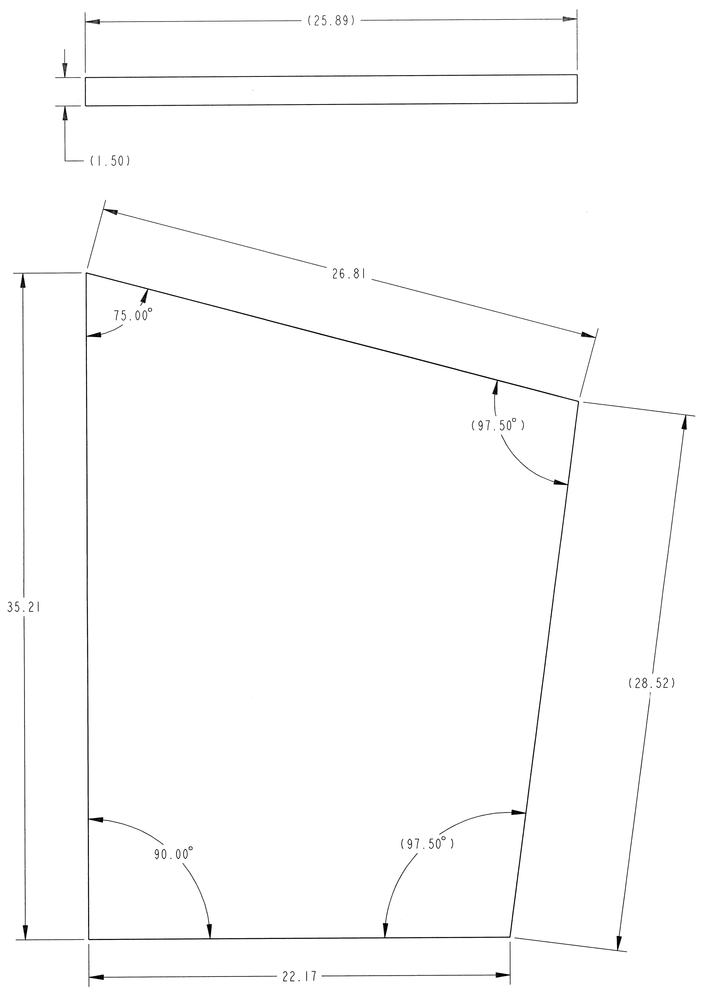

FIND NO. 3/1
SCALE 1/4

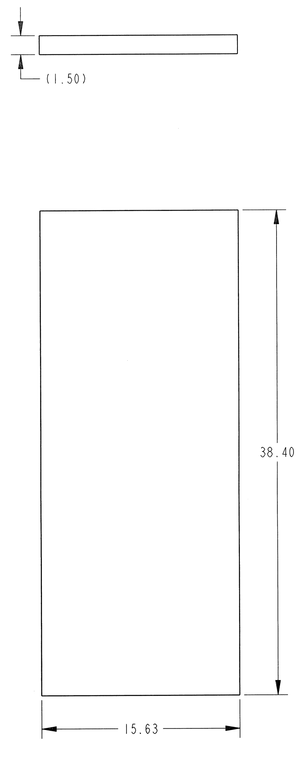

FIND NO. 4/1
SCALE 1/6

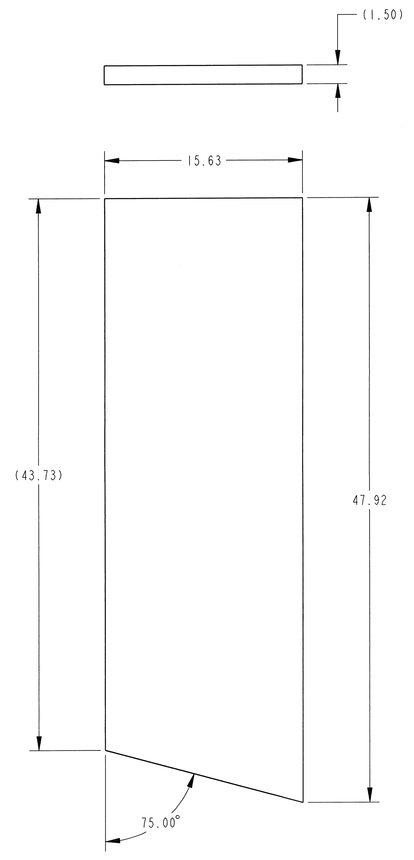

FIND NO. 5/1
SCALE 1/6

APPROVED FOR PUBLIC RELEASE; DISTRIBUTION IS UNLIMITED

LOWER SPIDER
OUTER PERIMETER
SUB-ASSEMBLY
LOX/FS
SLS LOX & FS TEST

SPECIAL TEST EQUIPMENT
DESIGN BRANCH - ET50
GEORGE C. MARSHALL
SPACE FLIGHT CENTER
NATIONAL AERONAUTICS
AND SPACE ADMINISTRATION
HUNTSVILLE, ALABAMA

90M14187 REVISION SEE SHT1

DRWG SIZE E SHEET 3 OF 3

NOTICE - WHEN GOVERNMENT DRAWINGS, SPECIFICATIONS, OR OTHER DATA ARE USED FOR ANY PURPOSE OTHER THAN IN CONNECTION WITH A DEFINITELY RELATED GOVERNMENT PROCUREMENT OPERATION, THE UNITED STATES GOVERNMENT THEREBY INCURS NO RESPONSIBILITY NOR ANY OBLIGATION WHATSOEVER; AND THE FACT THAT THE GOVERNMENT MAY HAVE FORMULATED, FURNISHED, OR IN ANY WAY SUPPLIED THE SAID DRAWINGS, SPECIFICATIONS OR OTHER DATA IS NOT TO BE REGARDED BY IMPLICATION OR OTHERWISE AS IN ANY MANNER LICENSING THE HOLDER OR ANY OTHER PERSON OR CORPORATION, OR CONVEYING ANY RIGHTS OR PERMISSION TO MANUFACTURE, USE, OR SELL ANY PATENTED INVENTION THAT MAY IN ANY WAY BE RELATED THERETO.

REVISIONS			
SYM	DESCRIPTION	DATE	APPROVAL

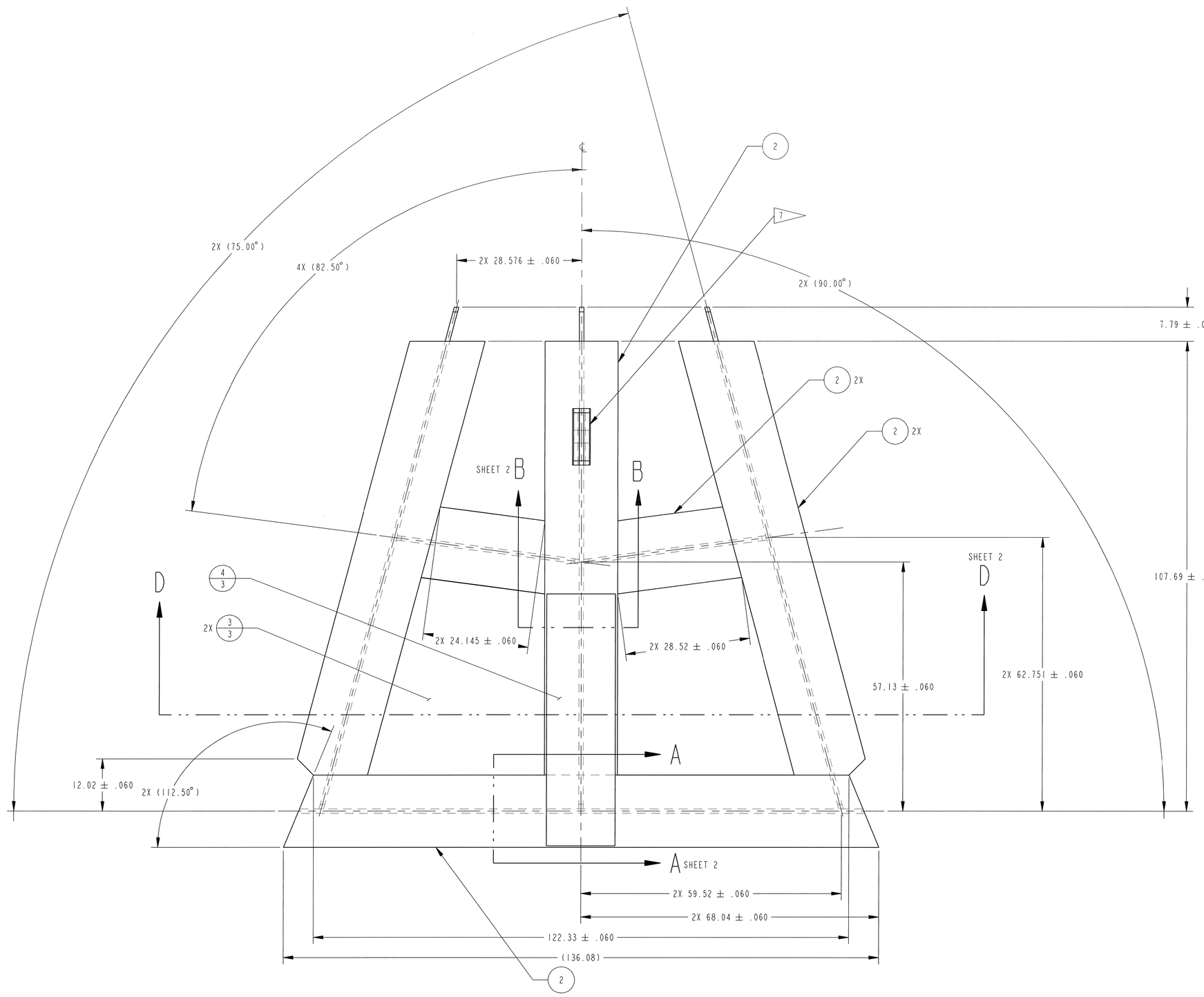

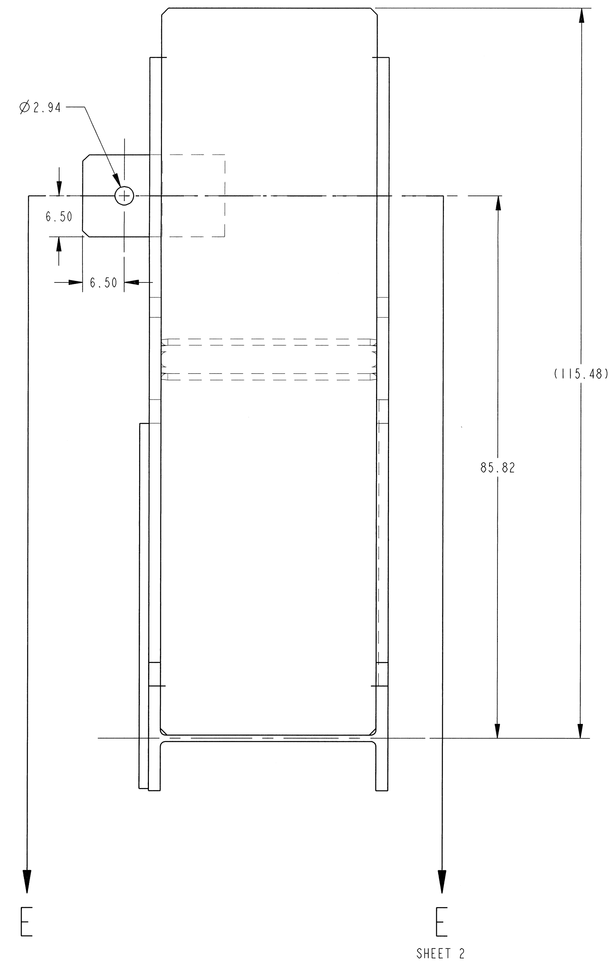

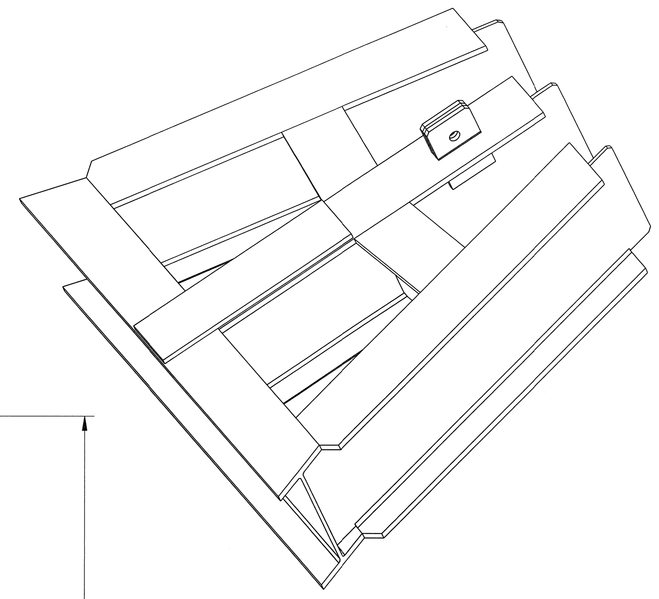

ISOMETRIC VIEW
FOR REFERENCE ONLY

GENERAL NOTES:

1. REMOVE ALL BURRS AND BREAK ALL SHARP EDGES.
2. COPE TO FIT AS REQUIRED.
3. ALL STRUCTURAL STEEL SHAPES SHALL CONFORM TO THE DESIGNATIONS AND DIMENSIONS OF THE 14TH EDITION AISC "STEEL CONSTRUCTION MANUAL".
4. STEEL WELDING DESIGN, PROCEDURES, AND NON-DESTRUCTIVE EVALUATION SHALL BE PER ANSI/AWS D1.1/D1.1M. "STRUCTURAL WELDING CODE-STEEL" AND CURRENT AS OF THE RELEASE DATE OF THIS DRAWING. UTILIZE WELDING PRACTICES AND TECHNIQUES TO MINIMIZE DISTORTION. UNLESS OTHERWISE SPECIFIED, WELDS SHALL BE 100% VISUALLY INSPECTED.
5. DIMENSIONING AND TOLERANCING IN ACCORDANCE WITH ASME Y14.5M-1994.
6. 125 ALL MACHINED SURFACES UNLESS OTHERWISE NOTED.
7. CUT THRU TOP FLANGE FOR FIND NO. 5 PLACEMENT.

ASSEMBLY 1
SCALE 1/12

APPROVED FOR PUBLIC RELEASE; DISTRIBUTION IS UNLIMITED

FIND NO.	CALLOUT SHT NO.	DETAIL SHT NO.	TOT REQ'D		PART NO.	DESCRIPTION	VEND NO.	REMARKS
6	1	3	1	F	90M14188-6	1.0" THICK PLATE		MAT'L: ASTM A572 GRADE 50
5	1	3	2	F	90M14188-5	1.5" THICK PLATE		MAT'L: ASTM A572 GRADE 50
4	1	3	1	F	90M14188-4	1.5" THICK PLATE		MAT'L: ASTM A572 GRADE 50
3	1	3	2	F	90M14188-3	1.5" THICK PLATE		MAT'L: ASTM A572 GRADE 50
2	1	-	A/R	P	90M14188-2	W36X330		MAT'L: ASTM A992
1	1	-	-	A	90M14188-1	LOWER SPIDER CORNER PERIMETER SUB-ASSEMBLY LOX/FS		

A=ASSEMBLY/INSTALLATION E=EXISTING F=FABRICATED ITEM M=MODIFIED ITEM P=PURCHASED ITEM

STRESS	2-6-14	PROGRAM MANAGER	02/06/2014
MATERIALS	2-6-14	TEST ENGINEERING	2/6/14
TRIBOLOGY	2/6/14	STRUCTURAL DESIGN LEAD	2/6/2014
SAFETY AND MISSION ASSURANCE	2/6/14	TEST CONDUCTOR	2/6/2014
PRESSURE CERTIFICATION MANAGER	2/6/14	STTE BRANCH CHIEF/LEAD	2/07/14

UNLESS OTHERWISE SPECIFIED TOLERANCES ARE
FRACTIONS ± 1/16 ± 1°/2
DECIMALS X ± .06, XX ± .03, XXX ± .010, ∠ ± .50°
(DIMENSIONS ARE IN INCHES, DO NOT SCALE DRAWING)

DRAWN BY	NEXT ASSEMBLY	DATE
MEAGAN JOHNSON	90M14185	09-20-13

LOWER SPIDER CORNER PERIMETER SUB-ASSEMBLY LOX/FS SLS LOX & FS TEST

SPECIAL TEST EQUIPMENT DESIGN BRANCH - ET50
GEORGE C. MARSHALL SPACE FLIGHT CENTER
NATIONAL AERONAUTICS AND SPACE ADMINISTRATION
HUNTSVILLE, ALABAMA

90M14188 REVISION ~

SIZE E SHEET 1 OF 3

NOTICE - WHEN GOVERNMENT DRAWINGS, SPECIFICATIONS, OR OTHER DATA ARE USED FOR ANY PURPOSE OTHER THAN IN CONNECTION WITH A DEFINITELY RELATED GOVERNMENT PROCUREMENT OPERATION, THE UNITED STATES GOVERNMENT THEREBY INCURS NO RESPONSIBILITY NOR ANY OBLIGATION WHATSOEVER, AND THE FACT THAT THE GOVERNMENT MAY HAVE FORMULATED, FURNISHED, OR IN ANY WAY SUPPLIED THE SAID DRAWINGS, SPECIFICATIONS OR OTHER DATA IS NOT TO BE REGARDED BY IMPLICATION OR OTHERWISE AS IN ANY MANNER LICENSING THE HOLDER OR ANY OTHER PERSON OR CORPORATION, OR CONVEYING ANY RIGHTS OR PERMISSION TO MANUFACTURE, USE, OR SELL ANY PATENTED INVENTION THAT MAY IN ANY WAY BE RELATED THERETO.

REVISIONS			
SYM	DESCRIPTION	DATE	APPROVAL

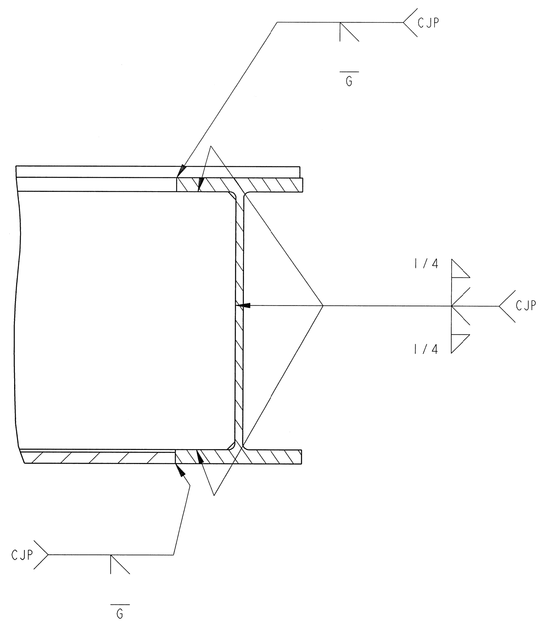

SECTION A - A 5X
SCALE 1/10
SHEET 1

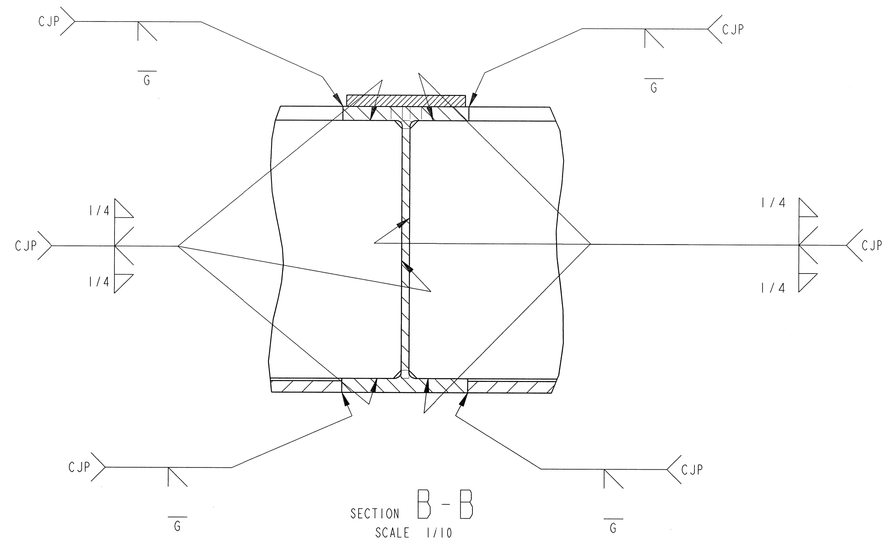

SECTION B - B
SCALE 1/10
SHEET 1
ALL PARTS NOT SHOWN FOR CLARITY

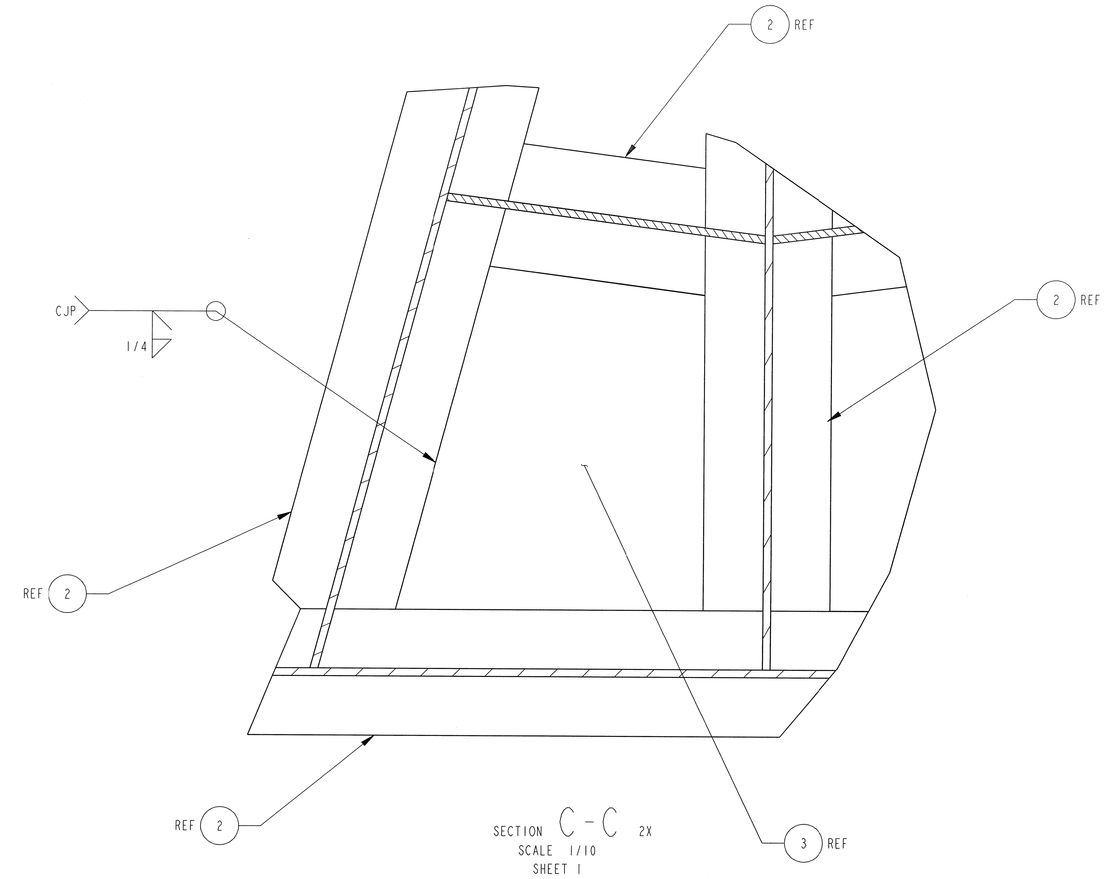

SECTION C - C 2X
SCALE 1/10
SHEET 1

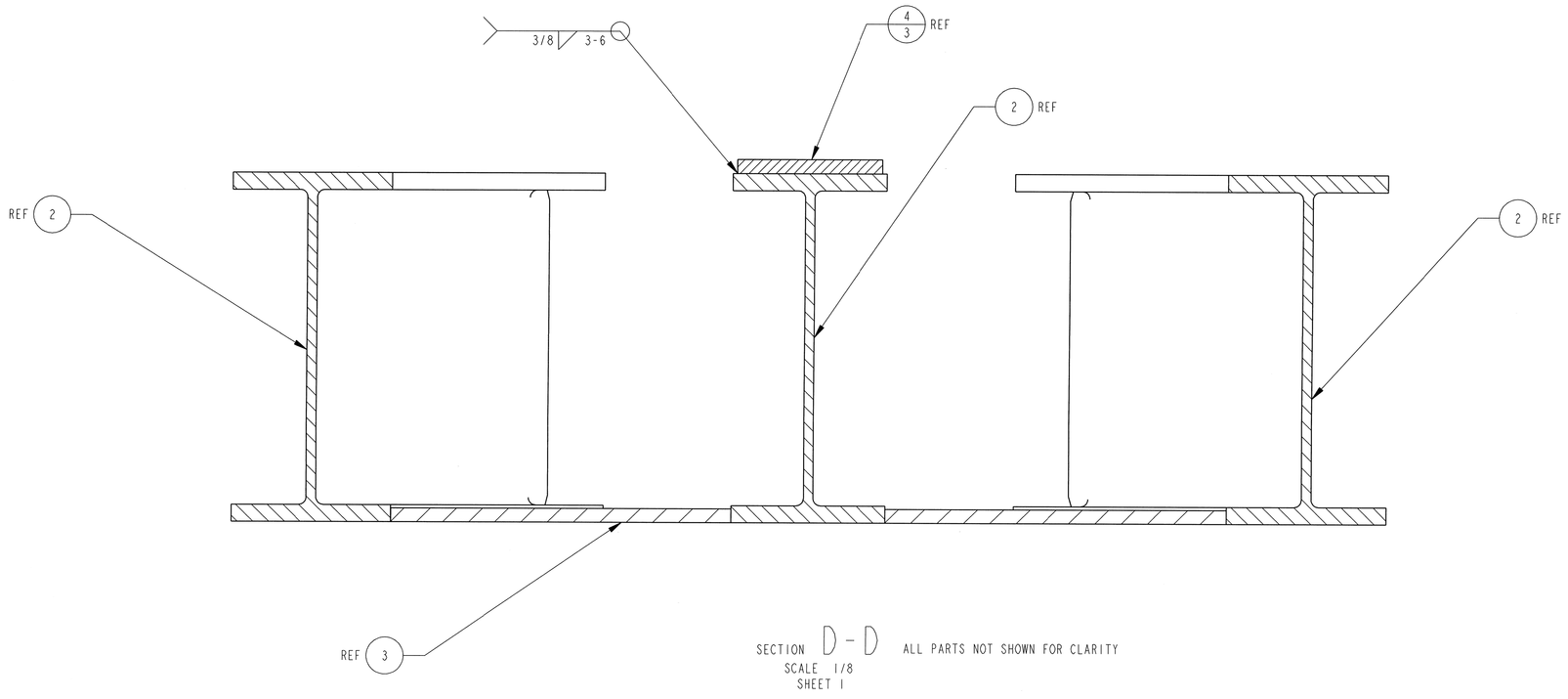

SECTION D - D ALL PARTS NOT SHOWN FOR CLARITY
SCALE 1/8
SHEET 1

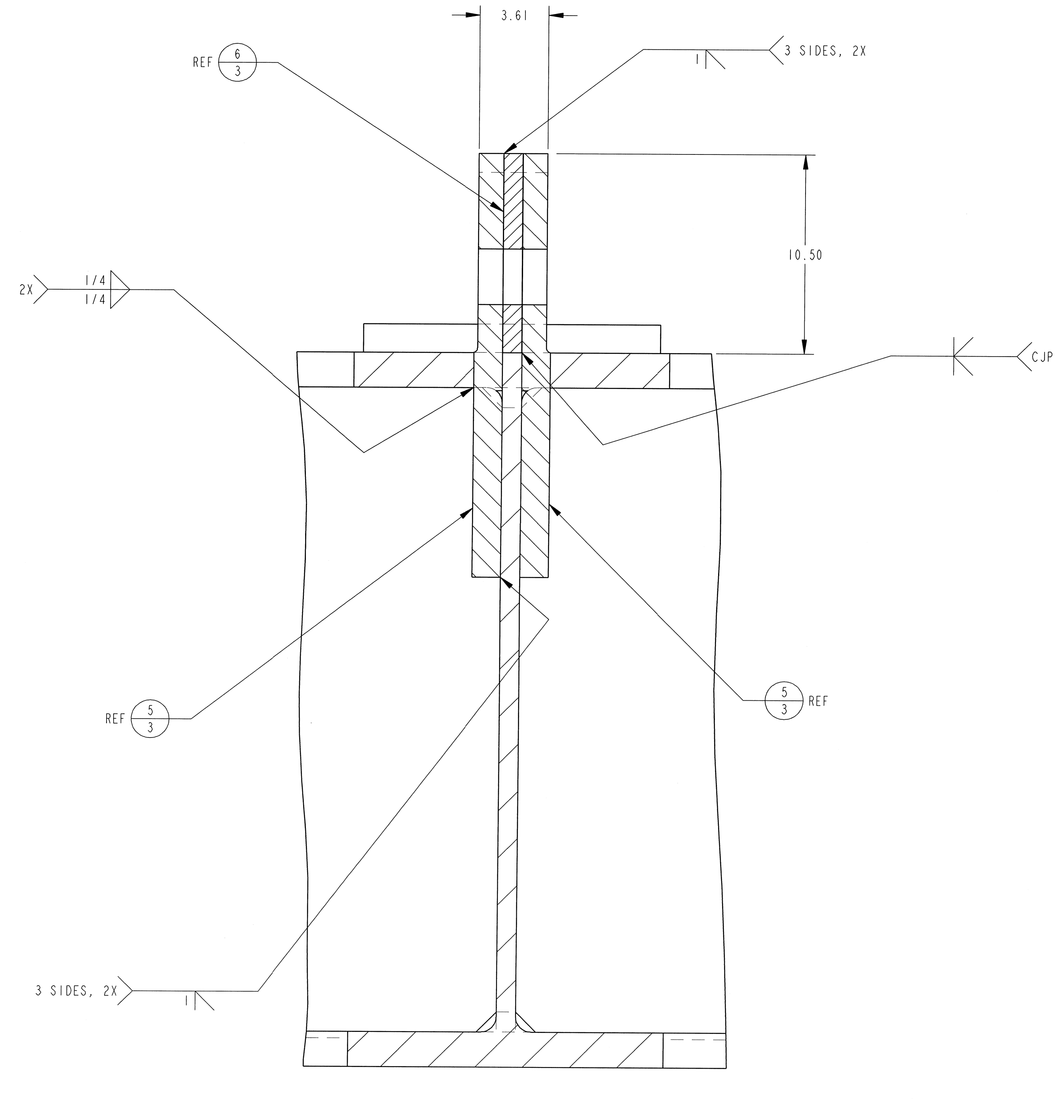

SECTION E - E 7
SCALE 1/4
SHEET 1

APPROVED FOR PUBLIC RELEASE; DISTRIBUTION IS UNLIMITED

LOWER SPIDER
CORNER PERIMETER
SUB-ASSEMBLY
LOX/FS
SLS LOX & FS TEST

SPECIAL TEST EQUIPMENT
DESIGN BRANCH - ET50
GEORGE C. MARSHALL
SPACE FLIGHT CENTER
NATIONAL AERONAUTICS
AND SPACE ADMINISTRATION
HUNTSVILLE, ALABAMA

90M14188 REVISION SEE SHT1

DWG SIZE E SHEET 2 OF 3

NOTICE - WHEN GOVERNMENT DRAWINGS, SPECIFICATIONS, OR OTHER DATA ARE USED FOR ANY PURPOSE OTHER THAN IN CONNECTION WITH A DEFINITELY RELATED GOVERNMENT PROCUREMENT OPERATION, THE UNITED STATES GOVERNMENT THEREBY INCURS NO RESPONSIBILITY NOR ANY OBLIGATION WHATSOEVER, AND THE FACT THAT THE GOVERNMENT MAY HAVE FORMULATED, FURNISHED, OR IN ANY WAY SUPPLIED THE SAID DRAWINGS, SPECIFICATIONS OR OTHER DATA IS NOT TO BE REGARDED BY IMPLICATION OR OTHERWISE AS IN ANY MANNER LICENSING THE HOLDER OR ANY OTHER PERSON OR CORPORATION, OR CONVEYING ANY RIGHTS OR PERMISSION TO MANUFACTURE, USE, OR SELL ANY PATENTED INVENTION THAT MAY IN ANY WAY BE RELATED THERETO.

SYM	DESCRIPTION	DATE	APPROVAL

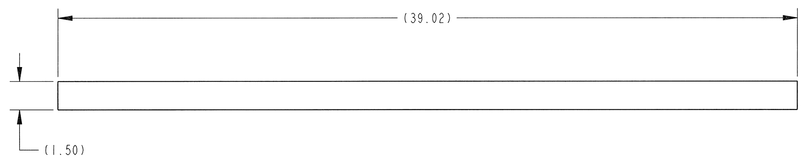

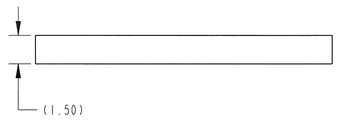

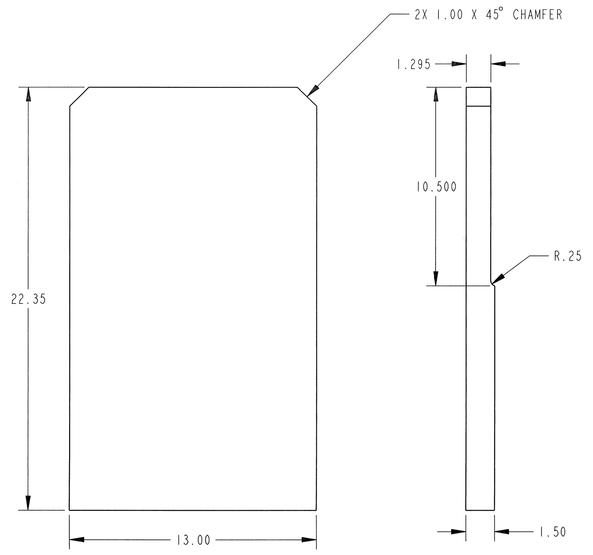

FIND NO. 5/1
SCALE 1/4

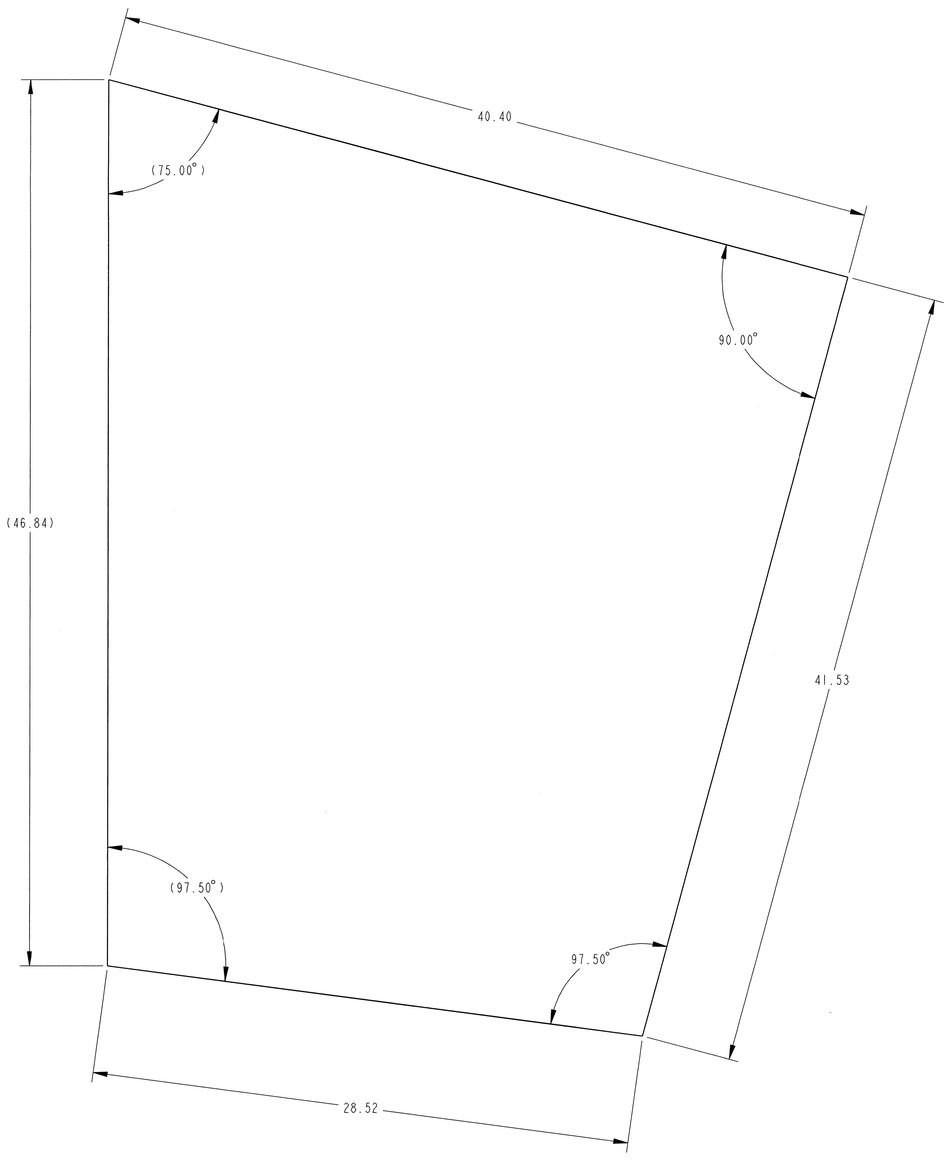

FIND NO. 3/1
SCALE 1/4

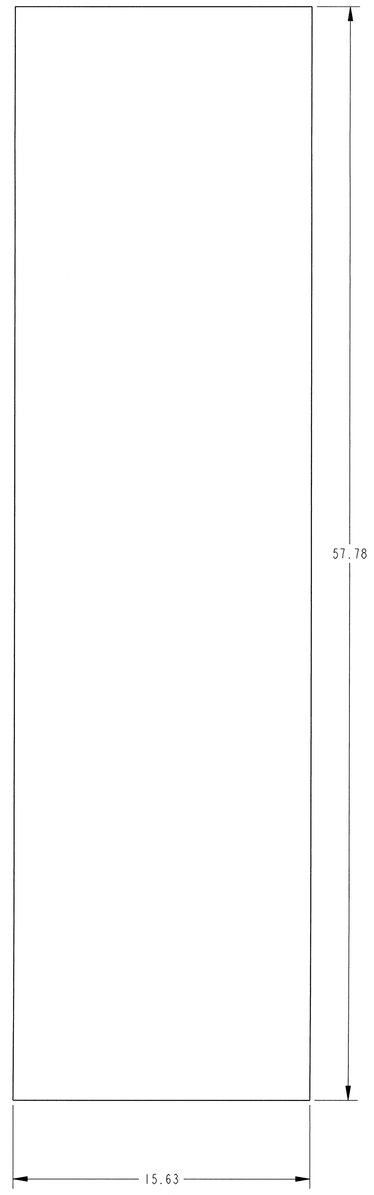

FIND NO. 4/1
SCALE 1/4

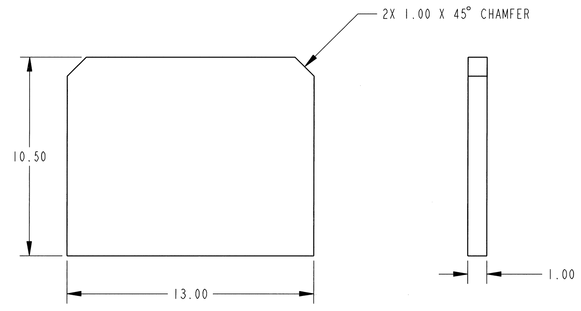

FIND NO. 6/1
SCALE 1/4

APPROVED FOR PUBLIC RELEASE; DISTRIBUTION IS UNLIMITED

LOWER SPIDER
CORNER PERIMETER
SUB-ASSEMBLY
LOX/FS
SLS LOX & FS TEST

SPECIAL TEST EQUIPMENT
DESIGN BRANCH - ET50
GEORGE C. MARSHALL
SPACE FLIGHT CENTER
NATIONAL AERONAUTICS
AND SPACE ADMINISTRATION
HUNTSVILLE, ALABAMA

90M14188 | REVISION SEE SHT1

SIZE E | SHEET 3 OF 3