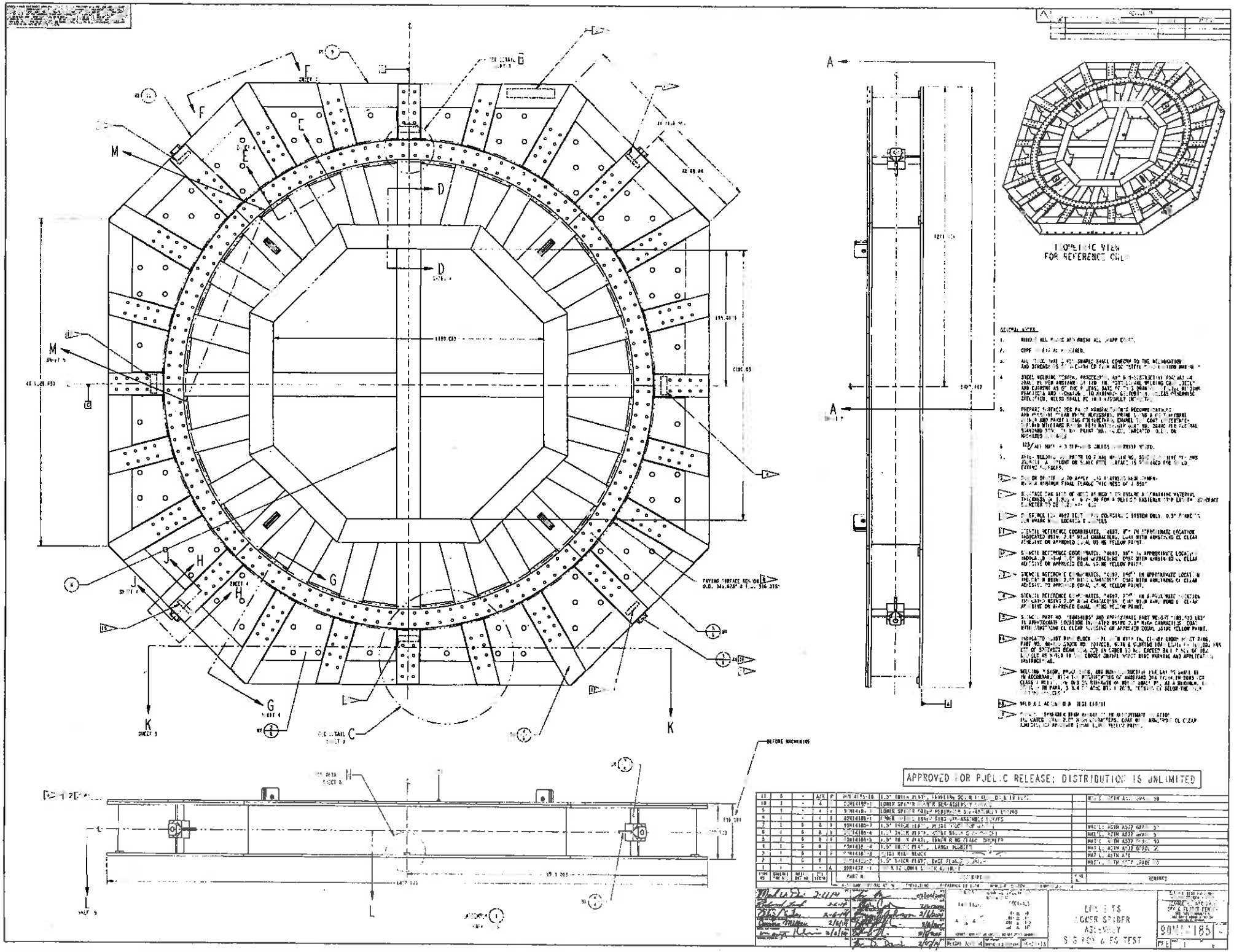

ISOMETRIC VIEW
FOR REFERENCE ONLY
GENERAL NOTES
APPROVED FOR PUBLIC RELEASE; DISTRIBUTION IS UNLIMITED
LOWER SPIDER
ASSEMBLY
SIS LOX & FS TEST

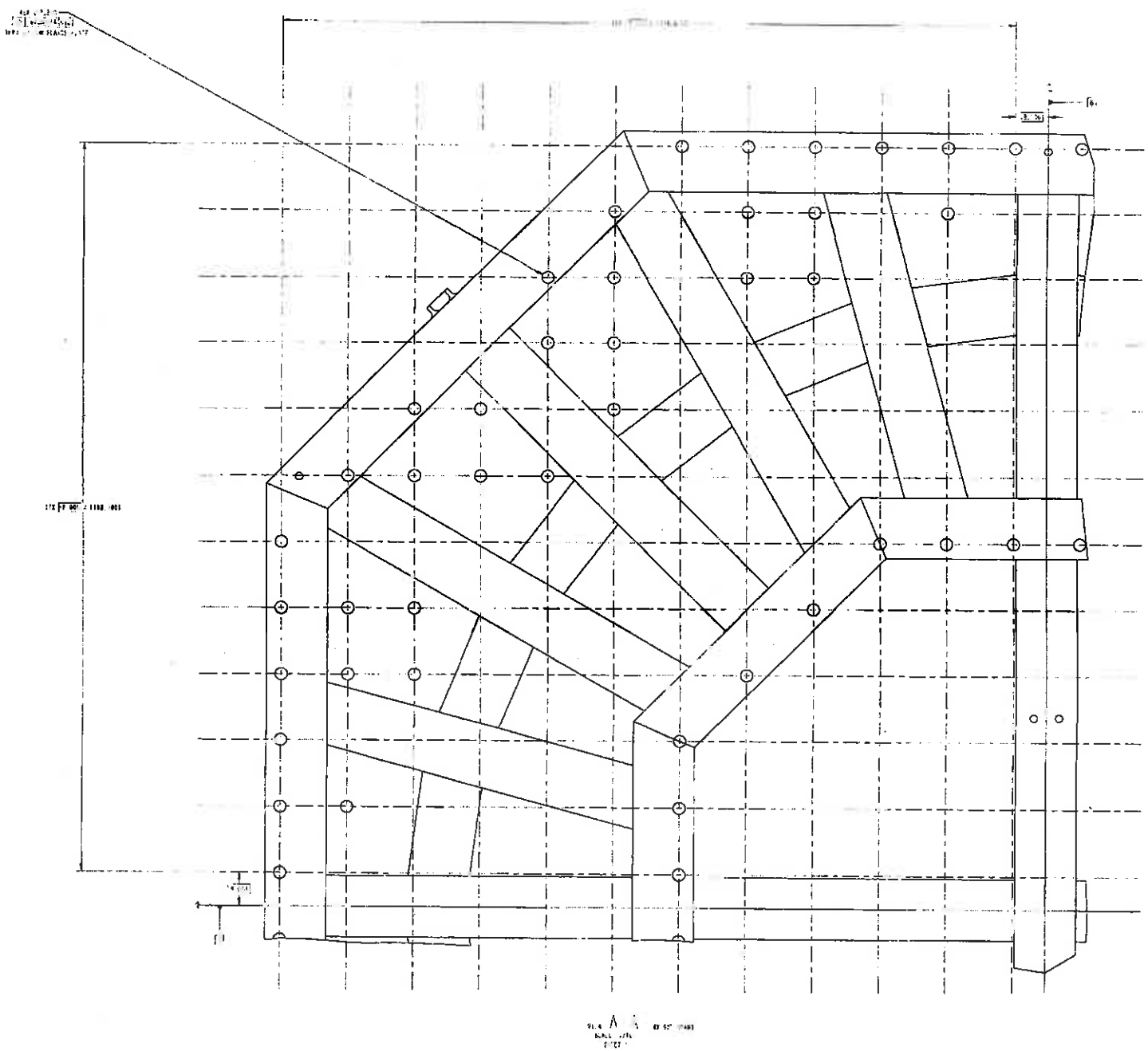

APPROVED FOR PUBLIC RELEASE; DISTRIBUTION IS UNLIMITED

LOX & FS
LOWER SPIDER
ASSEMBLY
SLS LOX & FS (SLS)

90M14185

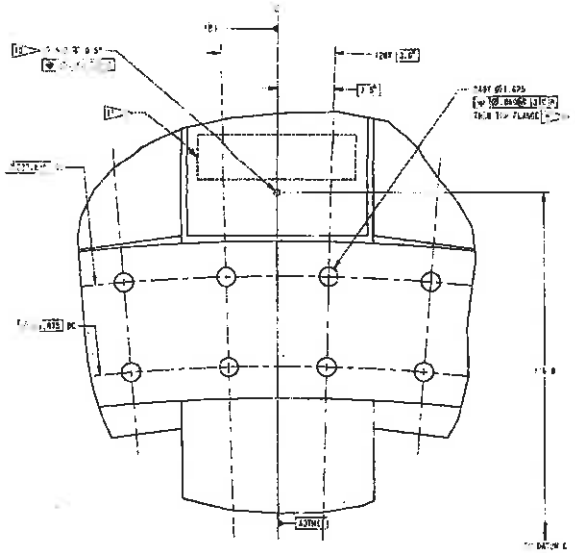

DETAIL B
SCALE 1/4
SHEET 1

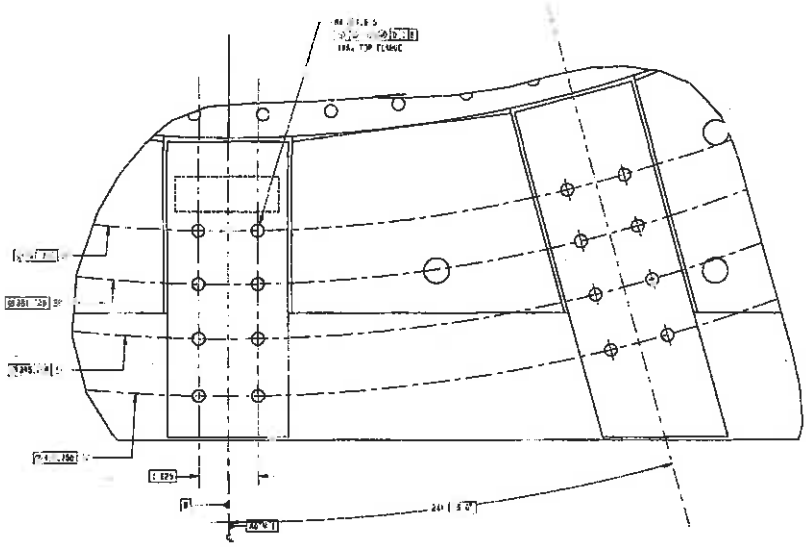

DETAIL C
SCALE 1/4
SHEET 1

APPROVED FOR PUBLIC RELEASE; DISTRIBUTION IS UNLIMITED

LOX & FS
LOWER SPIDER
ASSEMBLY
SLS LOX & FS TEST

92M11185

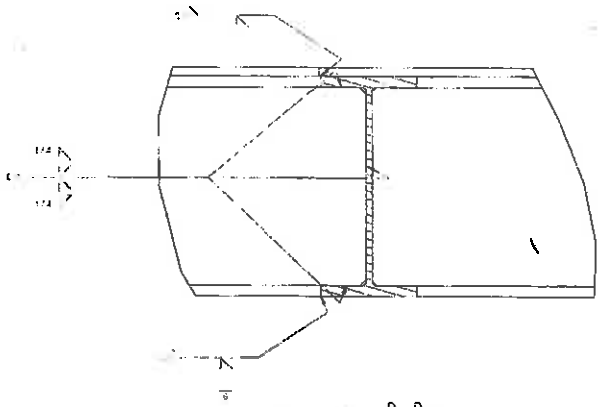

SECTION D-D

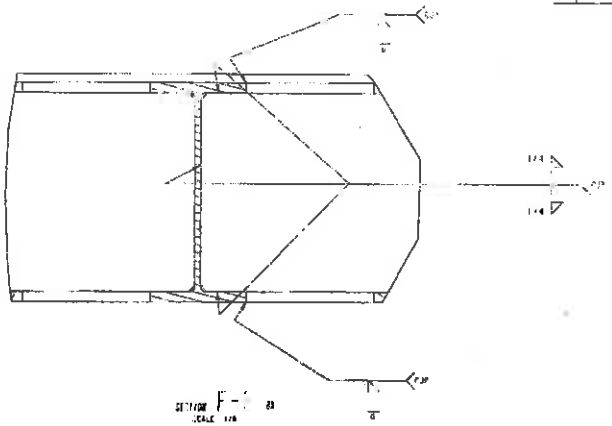

SECTION F-F

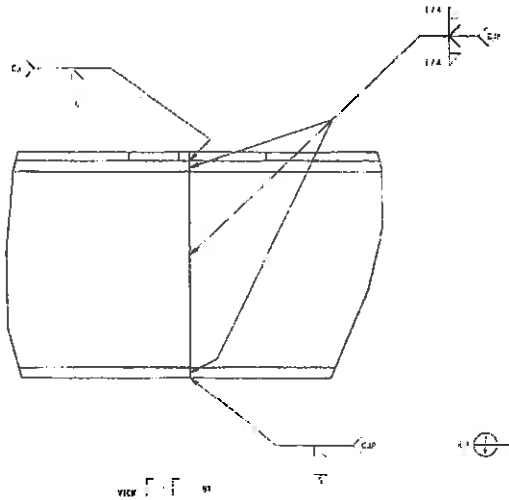

VIEW E-E

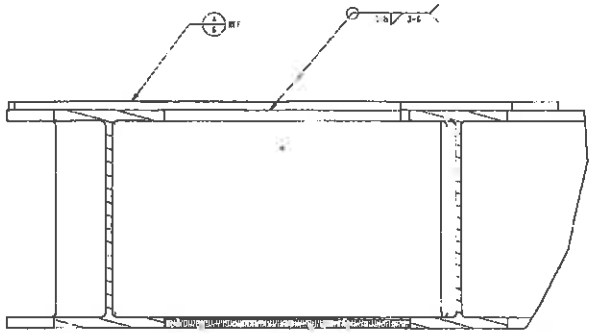

SECTION G-G

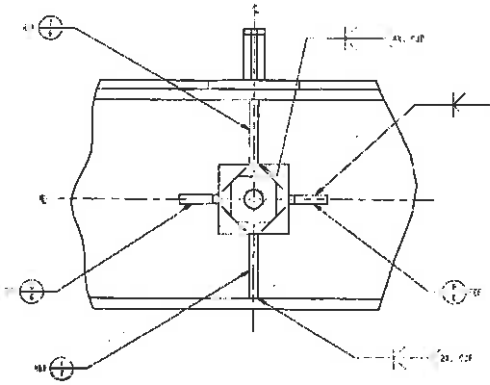

VIEW H-H

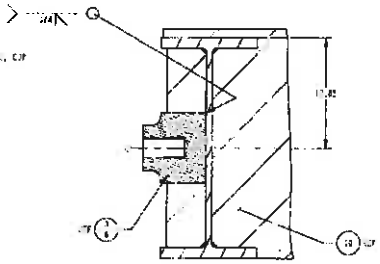

VIEW J-J

APPROVED FOR PUBLIC RELEASE; DISTRIBUTION IS UNLIMITED

LOX & FS
LOWER SPIDER
ASSEMBLY
SLS LOX & LS FS

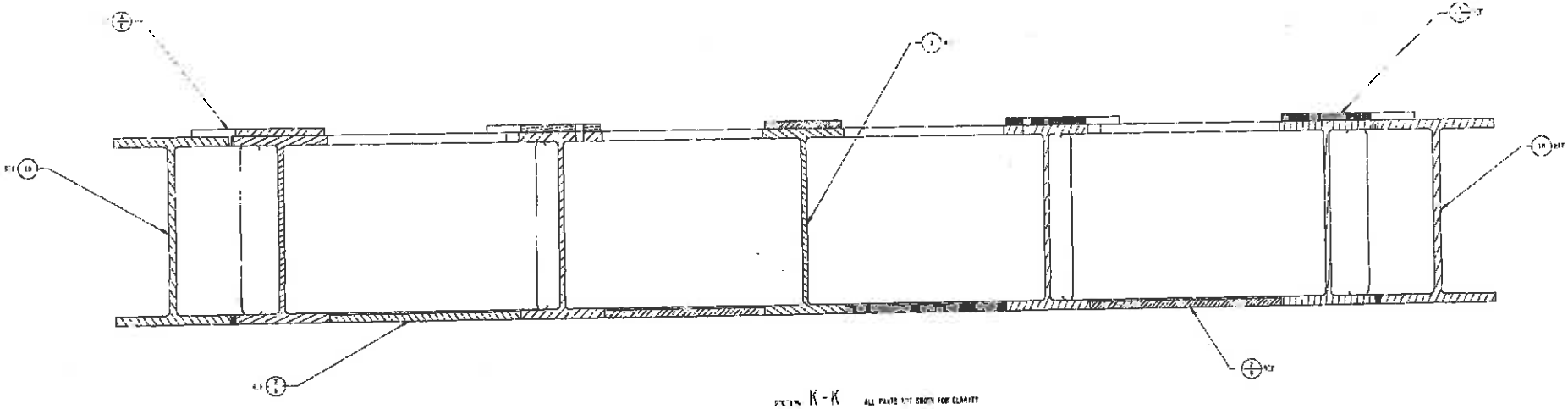

SECTION K-K ALL PARTS NOT SHOWN FOR CLARITY
SCALE 1/8
SHEET 1

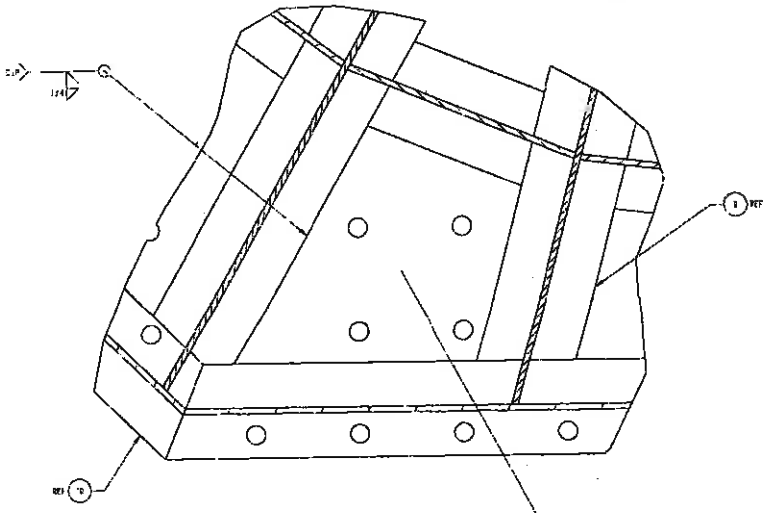

SECTION L-L
SCALE 1/8
SHEET 1

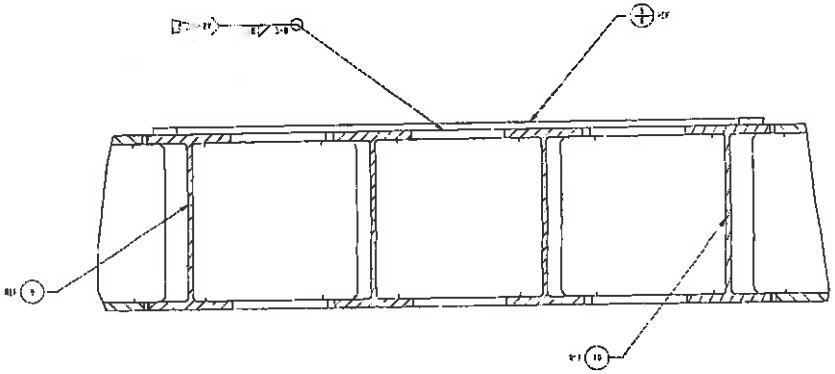

SECTION M-M ALL PARTS NOT SHOWN FOR CLARITY
SCALE 1/8
SHEET 1

APPROVED FOR PUBLIC RELEASE; DISTRIBUTION IS UNLIMITED

LOX & FS
LOWER SPINDLE
ASSEMBLY
SIS LOX & FS TEST

90M1185

SHEET 5 OF 6

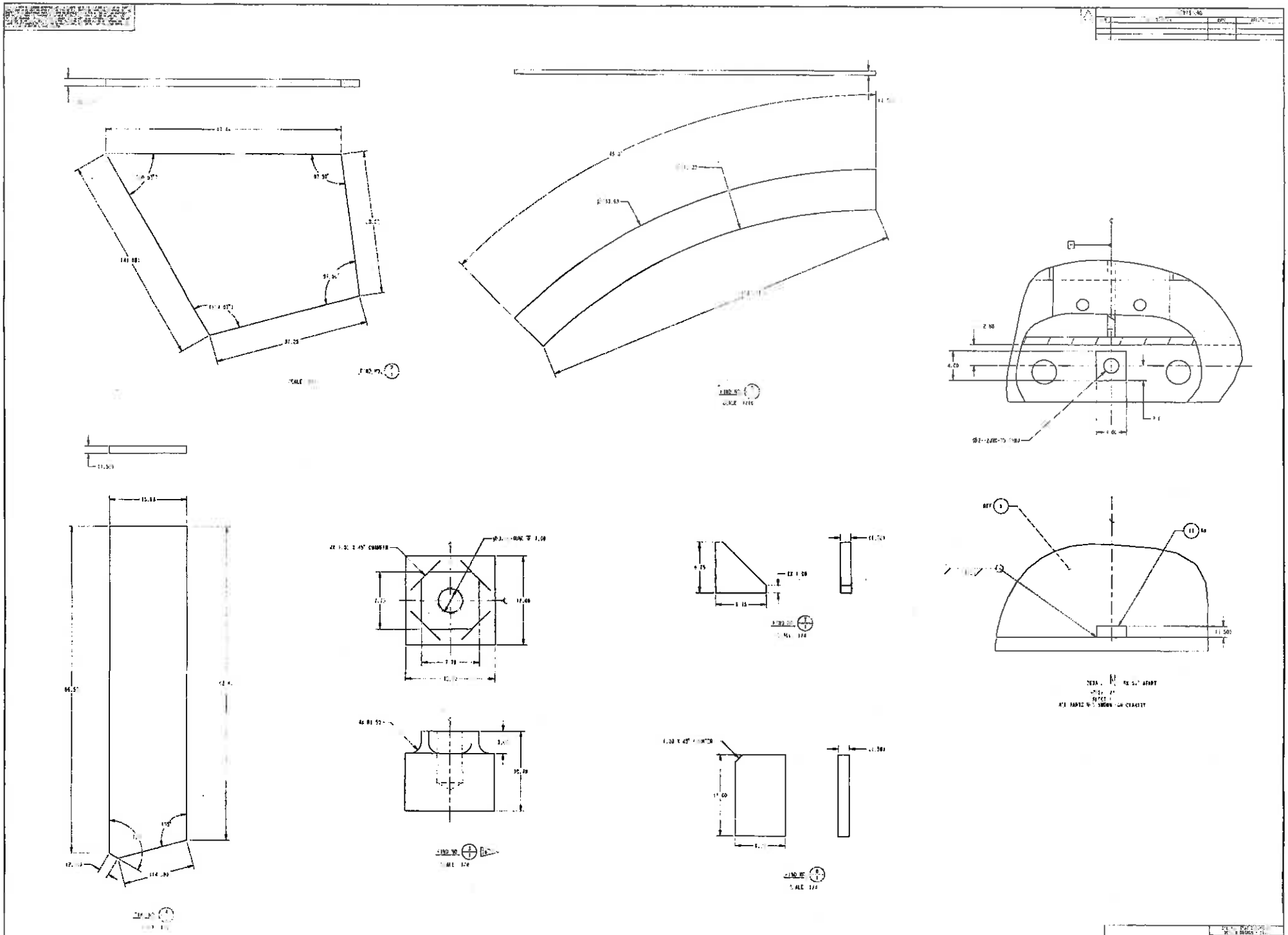
APPROVED FOR PUBLIC RELEASE; DISTRIBUTION IS UNLIMITED
LOWER SPIDER
ASSEMBLY
SLS LOX & FS TEST
90M14185

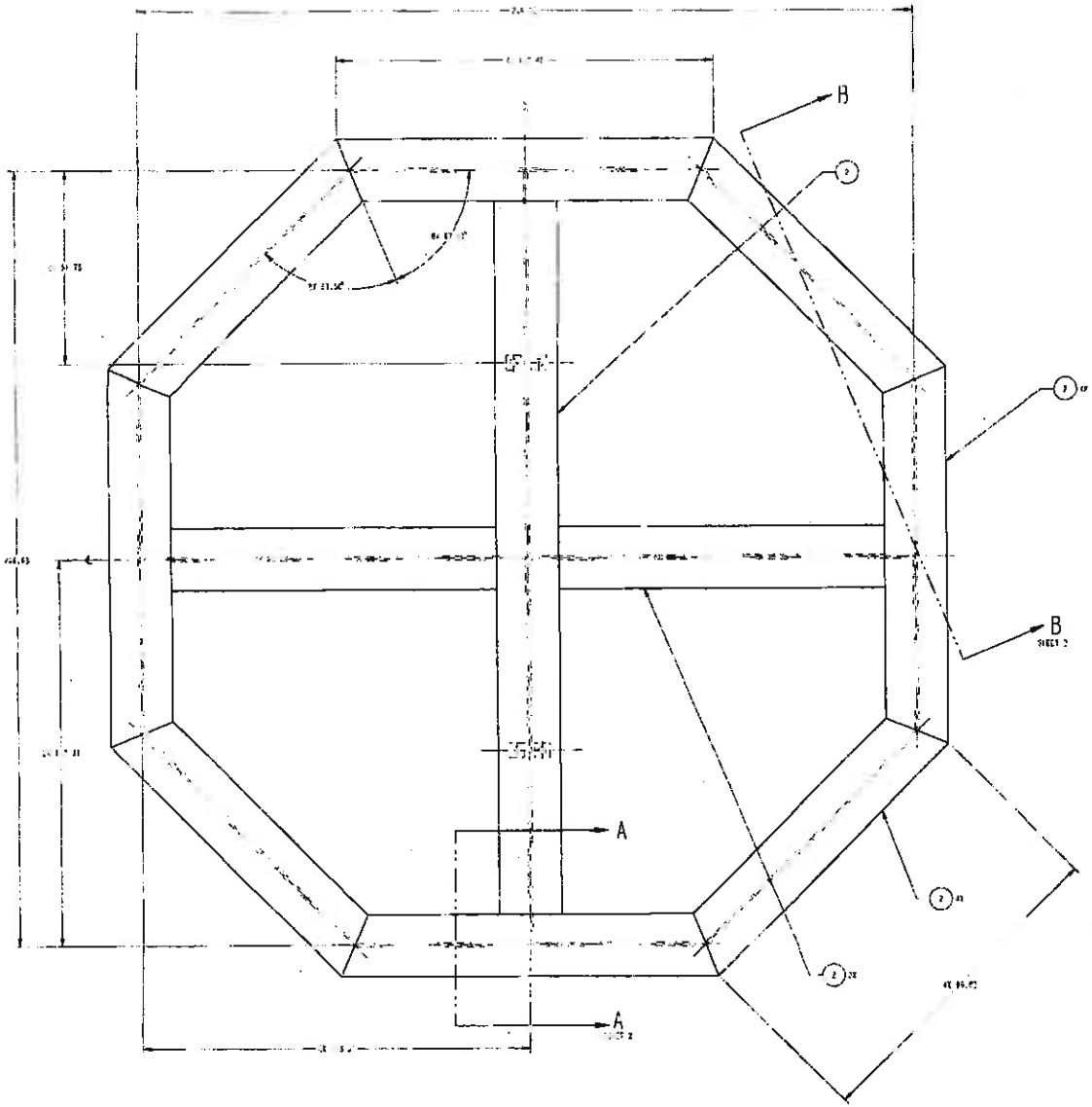

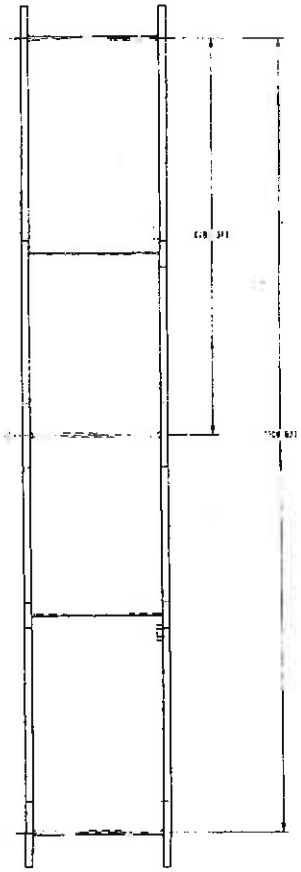

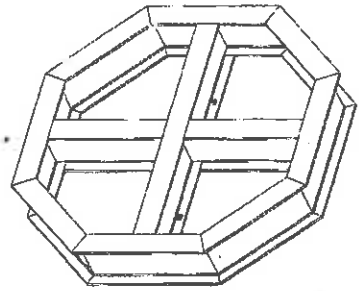

ISOMETRIC VIEW
FOR REFERENCE ONLY

GENERAL NOTES.

1. REMOVE ALL BURRS AND BREAK ALL SHARP EDGES.
2. COPE [illegible] AS REQ.
3. ALL STRUCTURAL STEEL SHAPES SHALL CONFORM TO THE [illegible] AND SHALL BE [illegible]
4. STEEL WELDING PROCEDURES, AND NON DESTRUCTIVE EVALUATION SHALL BE [illegible] AND SHALL BE [illegible] FOR ELEMENTS NON CRITICAL AS [illegible] ON THE DRAWING. [illegible] PROCEDURES AND TECHNIQUES TO MINIMIZE DISTORTION. [illegible] SPECIFIED, WELDS SHALL BE [illegible]
5. 125 ALL MACHINED SURFACES UNLESS OTHERWISE [illegible]
6. DIMENSIONING AND TOLERANCING IN ACCORDANCE WITH ASME Y14.5M-1994.

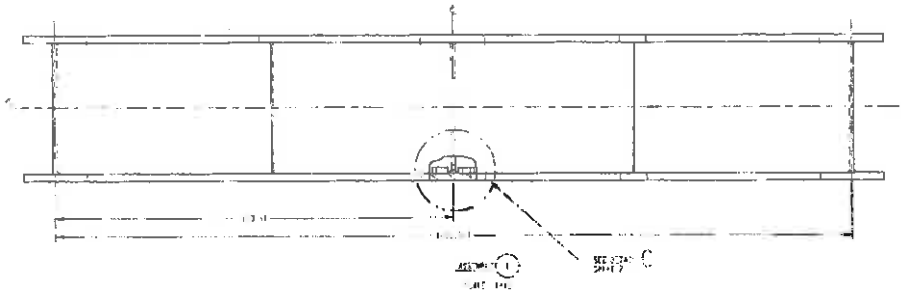

APPROVED FOR PUBLIC RELEASE; DISTRIBUTION IS UNLIMITED

3	2		APR 2	DIMENSION S	[illegible] PLATE, LEVELING SHIM FLANGE FOR [illegible]			MARTIN MARIETTA ASTRONAUTICS	
2	1		APR 2	DIMENSION 2	[illegible]			MARTIN MARIETTA ASTRONAUTICS	
1	1		-	A	DIMENSION 1	LOWER CRUCIBLE INNER RING ASSEMBLY TOOLING			
ITEM NO	QUANTITY REQ'D	SCHEM DWG	PART NO.			DESCRIPTION			SCALE

[illegible] 2-6-94	[illegible]	2/6/94	[illegible]	[illegible]	LOWER SPIRIT INNER RING SUB ASSEMBLY TOOLING SLS LOX BULK TEST
[illegible] 2-6-94	[illegible]	2/6/94			
[illegible] 2/6/94	[illegible]	2/6/94			
[illegible] 2/6/94	[illegible]	2/6/94			
[illegible] 2/6/94	[illegible]	2/6/94			
[illegible] 2-6-94	[illegible]	2/6/94			

SCALE: [illegible]

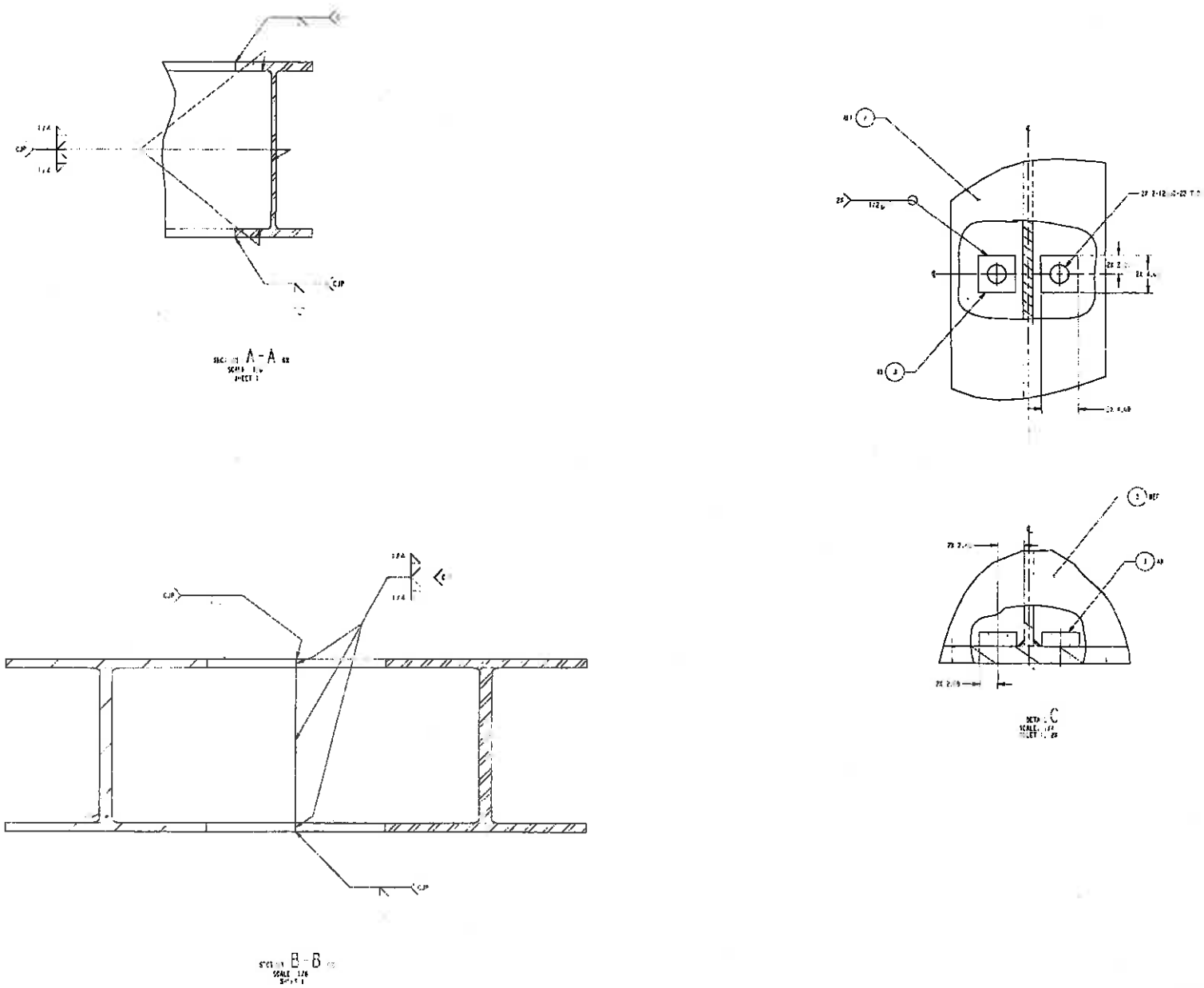

APPROVED FOR PUBLIC RELEASE. DISTRIBUTION IS UNLIMITED

SLS LOX & FS TEST

90M14186

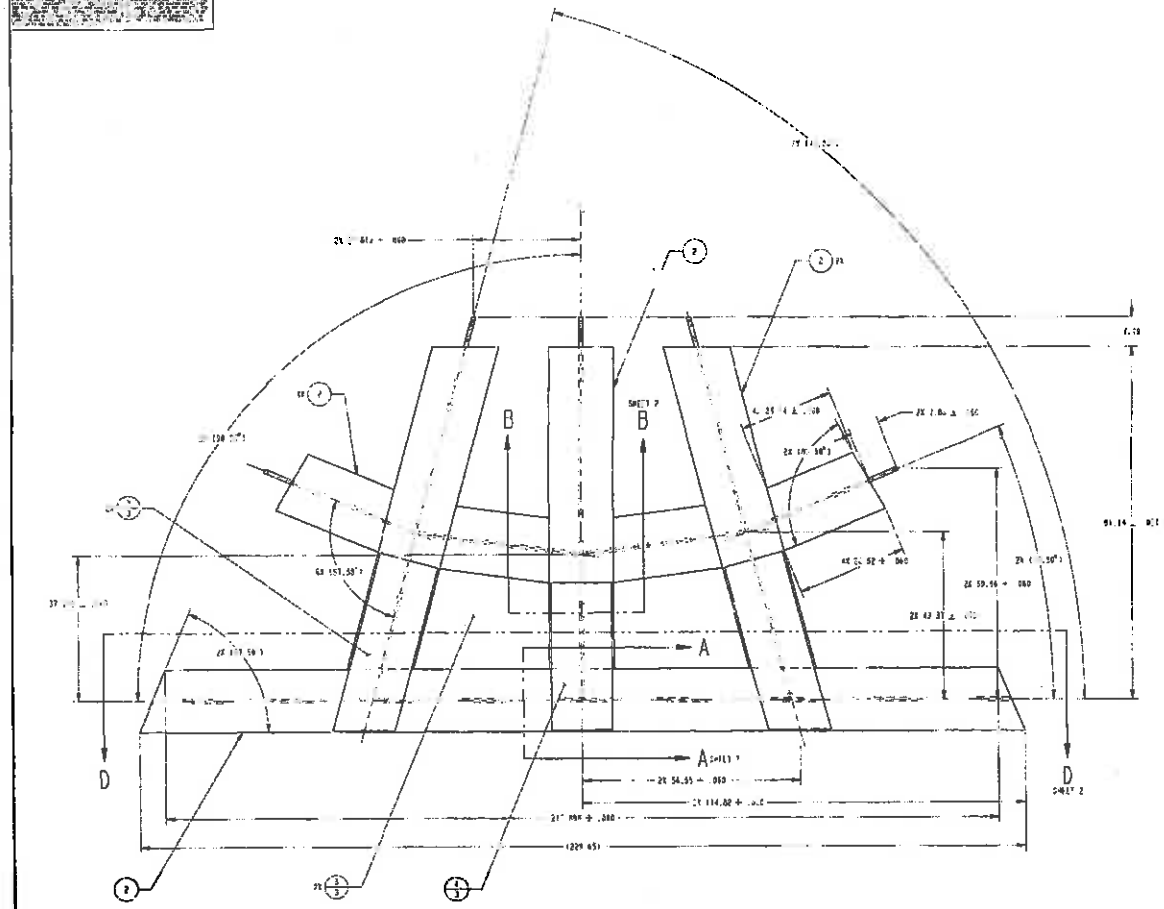

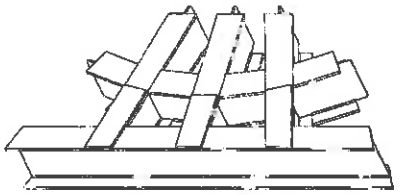

ISOMETRIC VIEW
FOR REFERENCE ONLY

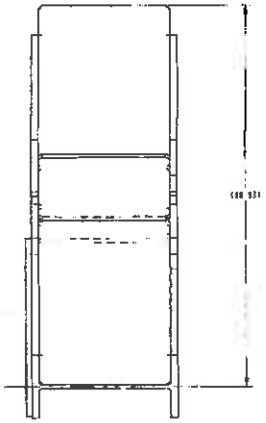

GENERAL NOTES:

1. REMOVE ALL BURRS AND BREAK ALL SHARP EDGES.
2. DIMENSIONS AS SHOWN.
3. ALL DIMENSIONS ON STEEL GRAPHICS ARE ALL DIMENSIONS IN INCHES UNLESS OTHERWISE NOTED. ALL DIMENSIONS ON STEEL GRAPHICS ARE TYPICAL UNLESS NOTED OTHERWISE.
4. STEEL WELDING DESIGN, PROCEDURES, AND NON-DESTRUCTIVE EVALUATION SHALL BE PER ANSI/AWS D1.1/D1.1M. MECHANICAL WELDING WORK SHALL BE PER COMPONENT 6A OF THE RELEASE ARTICLE 3 OF THIS DRAWING. ALL WELDING DEFECTS AND DEFICIENCIES TO BE REPAIRED PRIOR TO ANY TEST FIRING. DEFECTS, REPAIRS SHALL BE NOTED VISUALLY IN PHOTOS.
5. INSPECTION AND CERTIFICATION IN ACCORDANCE WITH ASME Y14.5M-1994
6. 125 ALL MACHINED SURFACES UNLESS OTHERWISE NOTED.

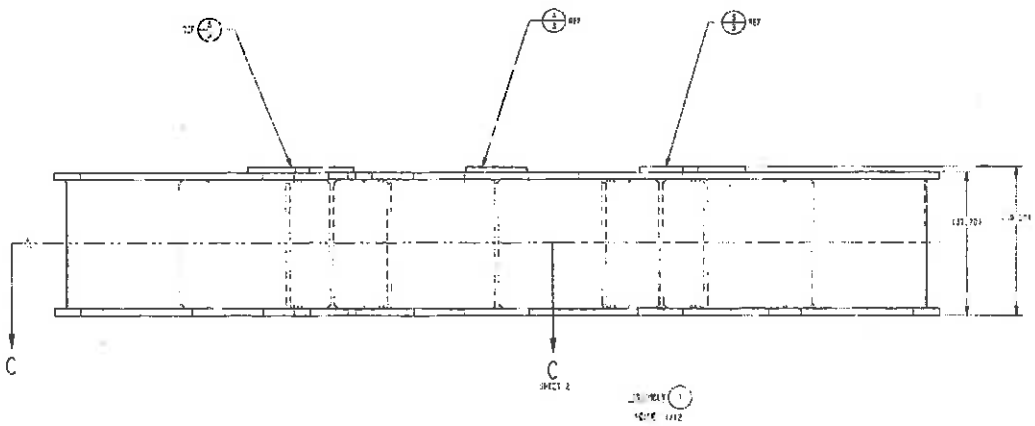

APPROVED FOR PUBLIC RELEASE; DISTRIBUTION IS UNLIMITED

5	1	3	2	F	[illegible]	1.5" THICK PLATE	MATL - ASTM A572 GRADE 50	
4	1	3	1	F	90M14187-4	1.5" THICK PLATE	MATL - ASTM A572 GRADE 50	
3	1	3	1	F	90M14187-3	1.5" THICK PLATE	MATL - ASTM A572 GRADE 50	
2	1	-	A/R	F	90M14187-2	PADEYES	MATL - ASTM A992	
1	1	-	-	A	90M14187-1	LOWER OUTER PERIMETER SUB-ASSEMBLY		
ITEM NO	NO. REQ'D PER NO	DESIG. SYM. NO.	QTY REQ'D		PART NO.	DESCRIPTION		SHEET REF

Mike Dow 2-6-14			
[illegible] 2-6-14			
[illegible] 2/6/14			
[illegible] 2/6/14			
[illegible] 2/6/14			
[illegible] 2/6/14			
[illegible] 2/6/14			

DESIGN ACTIVITY CONTRACTOR
FRACTIONS ± 1/16
DECIMALS .X ± .1 .XX ± .03 .XXX ± .010 .XXXX ± .005
ANGULAR ± 1°
MATL SPEC N/A
DOM14185
SCALE 1:3

LOWER OUTER
OUTER PERIMETER
SUB-ASSEMBLY
LOX/RS
SLS LNG & FS TEST

90M14187
SHEET 1 OF 3

SECTION B-B
SECTION D-D
SECTION A-A
SECTION C-C

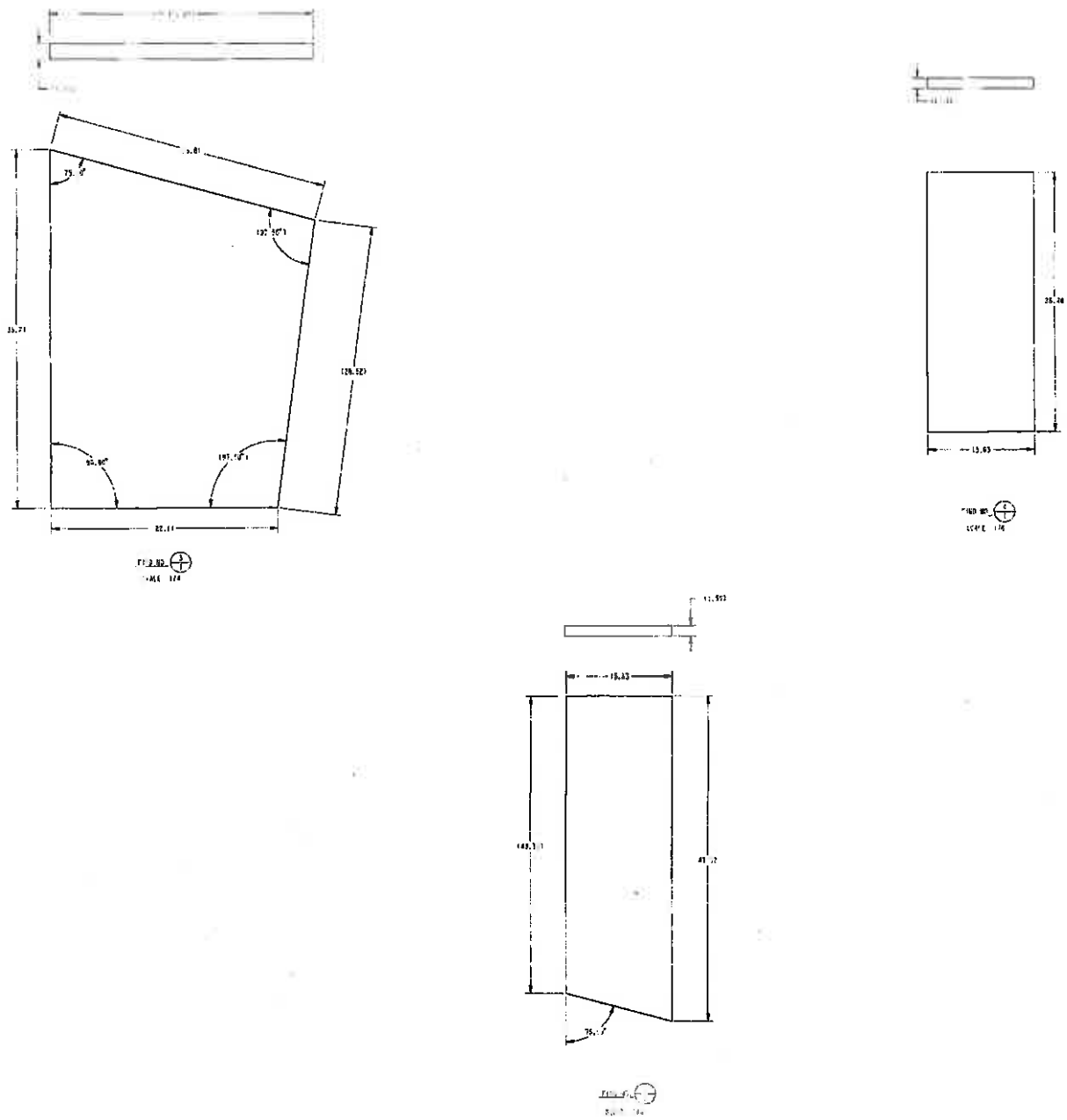

APPROVED FOR PUBLIC RELEASE; DISTRIBUTION IS UNLIMITED

LOWER SAIDER
OUTER PERIMETER
SUB ASSEMBLY
DWG
SEC LOY & FS TEST

90M14137

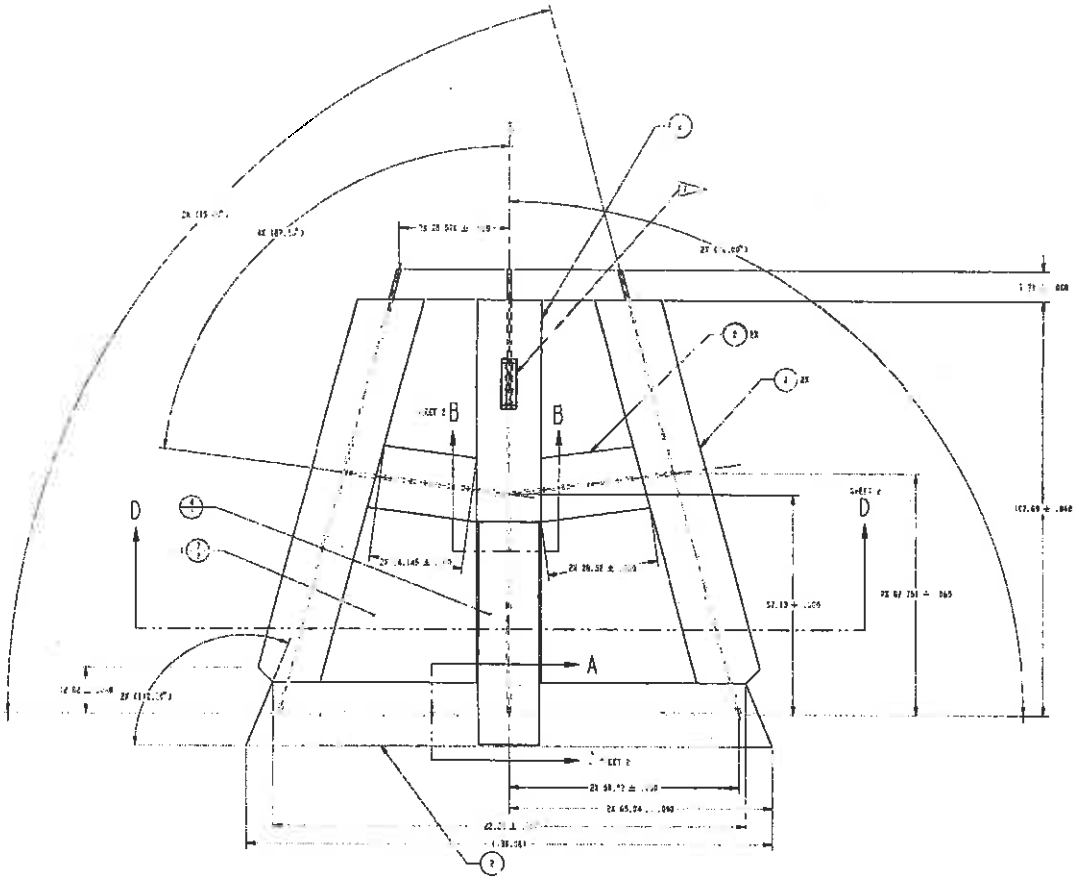

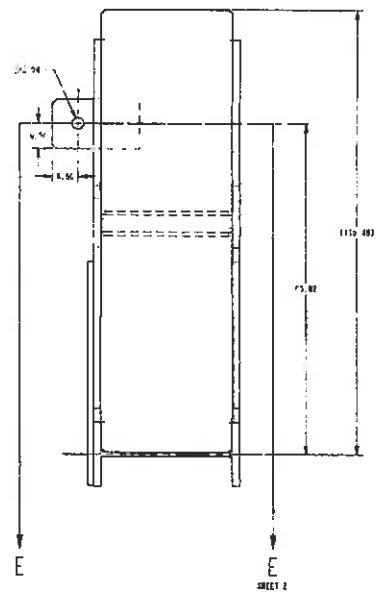

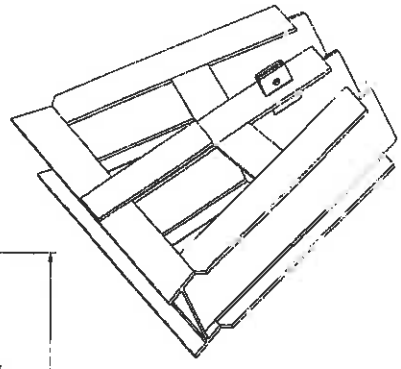

ISOMETRIC VIEW
FOR REFERENCE ONLY

GENERAL NOTES:

1. REMOVE ALL BURRS AND BREAK SHARP EDGES.
2. [illegible]
3. ALL STANDARD STEEL, PIPE, SHAPE, SHEET, PLATE, ETC. DEVIATIONS TO BE APPROVED BY THE KATH EXIT STATION STEEL CONSTRUCTION MANUAL.
4. STEEL WELDING DETAILS, PROCEDURES, AND WELDER QUALIFICATIONS EVALUATED IN ACCORDANCE WITH AWS D1.1 [illegible] WELDING CODE [illegible] ALL WELDS SHOWN ON THE DRAWING [illegible] FRACTURE AND [illegible] SHOULD [illegible] FRACTURE. WELDS [illegible] TO 100% [illegible] QUALITY INSPECTED.
5. [illegible] IN ACCORDANCE WITH ASME Y14.5M-1994
125 μ. ALL MACHINED SURFACES [illegible] FINISH NOTED.
7. [illegible] ELEMENT.

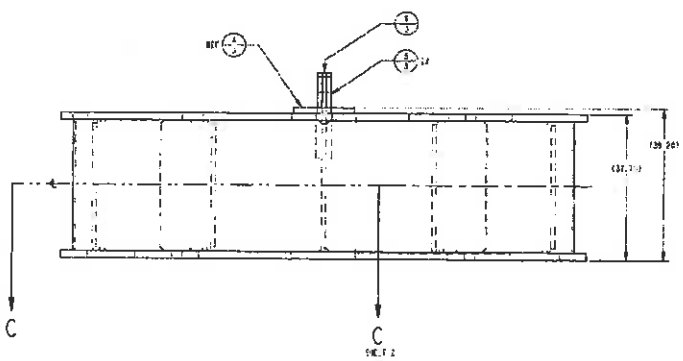

APPROVED FOR PUBLIC RELEASE; DISTRIBUTION IS UNLIMITED

6	1	3	1	P	[illegible]	1.5" [illegible] PLATE	MAT'L: ASTM A572 GRADE [illegible]
5	1	3	7	P	[illegible]	1.5" [illegible] PLATE	MAT'L: ASTM A572 GRADE 50
4	1	A	1	P	[illegible]	1.5" TWEEN PLATE	MAT'L: ASTM A572 GRADE 50
3	1	A	5	P	[illegible]	1.5" TWEEN PLATE	MAT'L: ASTM A572 GRADE [illegible]
2	1	-	A	P	[illegible]	[illegible]	MAT'L: ASTM A572 GRADE [illegible]
1	1	-	-	A	[illegible]	[illegible]	MAT'L: ASTM A-[illegible]
ITEM NO.	PATTERN NO.	DRAWING NO.	REV.		PART NO.	[illegible]	REMARKS

[illegible]

LANDING SPACER
CORNER PERIMETER
SUB ASSEMBLY
10X/45
OLS LOC. & FS TEST

DCM14188

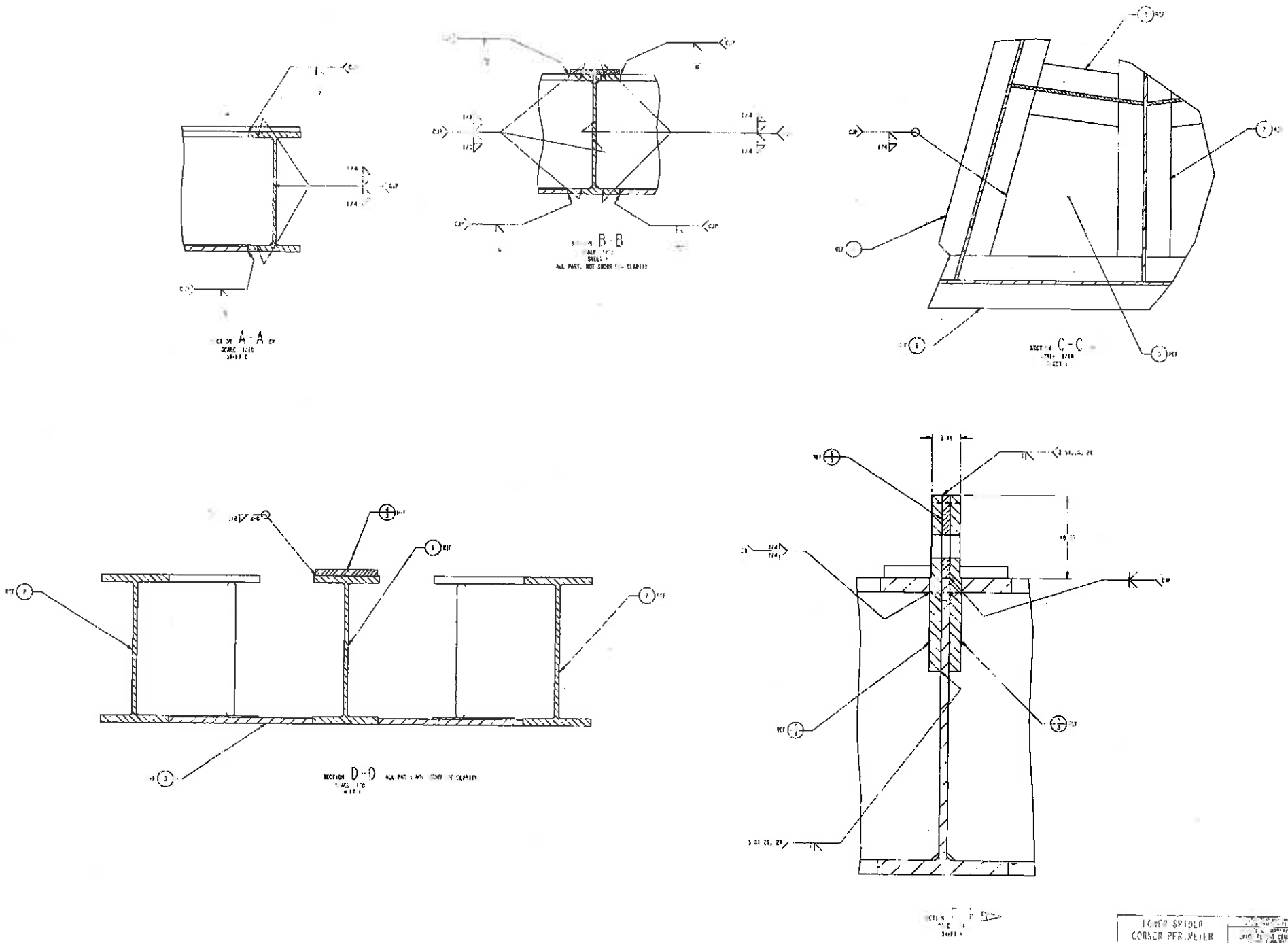
SECTION A-A
SECTION B-B
SECTION C-C
SECTION D-D
APPROVED FOR PUBLIC RELEASE; DISTRIBUTION IS UNLIMITED
LOWER SPIDER
CORNER PERIMETER
SUB-ASSEMBLY
LOWER
SLS BOX & FS TEST
90M11188

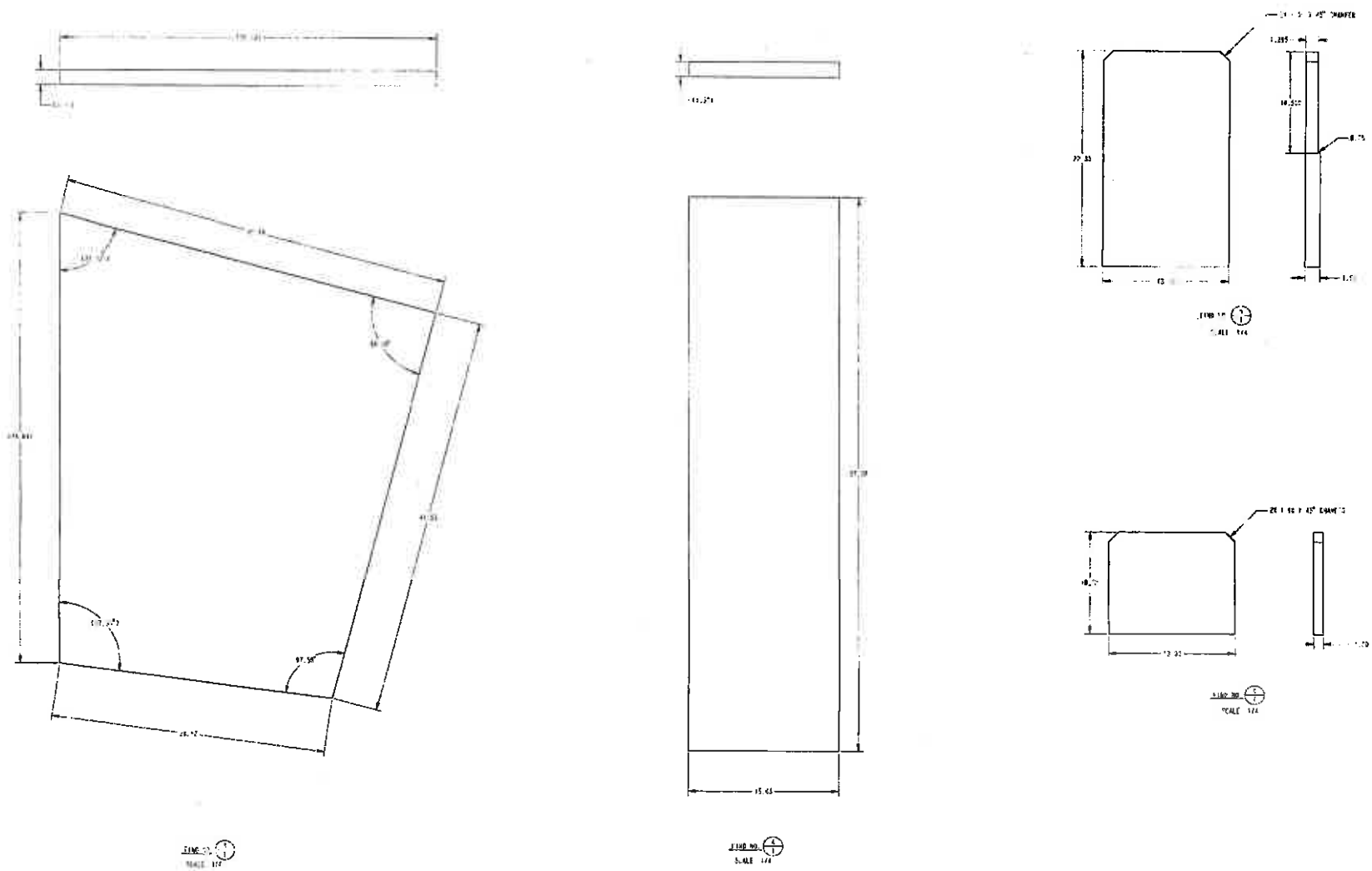

APPROVED FOR PUBLIC RELEASE; DISTRIBUTION IS UNLIMITED

LOWER SPIDER
CORNER PERIMETER
SUB-ASSEMBLY
LOWFES
SLS LOX & FS TEST

90M1 188