NOTICE - WHEN GOVERNMENT DRAWINGS, SPECIFICATIONS, OR OTHER DATA ARE USED FOR ANY PURPOSE OTHER THAN IN CONNECTION WITH A DEFINITELY RELATED GOVERNMENT PROCUREMENT OPERATION, THE UNITED STATES GOVERNMENT THEREBY INCURS NO RESPONSIBILITY NOR ANY OBLIGATION WHATSOEVER; AND THE FACT THAT THE GOVERNMENT MAY HAVE FORMULATED, FURNISHED, OR IN ANY WAY SUPPLIED THE SAID DRAWINGS, SPECIFICATIONS OR OTHER DATA IS NOT TO BE REGARDED BY IMPLICATION OR OTHERWISE AS IN ANY MANNER LICENSING THE HOLDER OR ANY OTHER PERSON OR CORPORATION, OR CONVEYING ANY RIGHTS OR PERMISSION TO MANUFACTURE, USE, OR SELL ANY PATENTED INVENTION THAT MAY IN ANY WAY BE RELATED THERETO.

REVISIONS			
SYM	DESCRIPTION	DATE	APPROVAL
A	REVISED SHEET 1		
A1	ADDED F/N 9		
A2	DELETED FLAG NOTE 8 AND RENUMBERED NOTES		
A3	REVISED NOTE 8		
A4	REVISED FLAG NOTE 10		
A5	WAS "SEE NOTE 11-A"		

	TABLE A												
	PIN SIZE	L	CE	CB	CD	KK	ER	BL	BW	T	CW	TENSION LOAD* CAPACITY (LB)	COMPRESSION LOAD* CAPACITY (LB)	WEIGHT (LB)
F.N.-1	2.50	3.00	7.50	3.00	2.5007/2.5000	3.00-8UN-2B THRU	2.25	4.50	5.00	4.50	1.00	95,000	120,000	26.75
F.N.-2	3.00	3.25	7.75	3.00	3.0007/3.0000	3.00-8UN-2B THRU	2.25	4.50	5.50	4.50	1.25	122,000	155,000	39.75
F.N.-3	3.50	4.00	10.00	4.00	3.5009/3.5000	4.00-8UN-2B THRU	3.25	6.50	6.50	6.00	1.25	190,000	240,000	70.00
F.N.-4	4.00	4.50	10.50	4.50	4.0009/4.0000	4.00-8UN-2B THRU	3.75	7.50	7.50	6.00	1.50	268,000	340,000	106.25
F.N.-5	5.00	6.50	15.50	6.00	5.0010/5.0000	6.00-8UN-2B THRU	4.50	9.00	9.50	9.00	1.75	350,000	465,000	198.00
F.N.-6	6.00	7.25	16.25	6.50	6.0010/6.0000	6.00-8UN-2B THRU	5.25	10.50	10.50	9.00	2.00	575,000	765,000	291.00
F.N.-7	7.00	7.75	18.25	7.50	7.0010/7.0000	7.00-8UN-2B THRU	5.75	11.50	12.00	10.50	2.25	575,000	765,000	428.00
F.N.-8	8.00	9.00	21.00	8.00	8.0012/8.0000	8.00-8UN-2B THRU	7.25	14.50	13.50	12.00	2.75	710,000	945,000	673.00
F.N.-9	6.50	7.50	17.25	7.00	6.5010/6.5000	6.00-8UN-2B THRU	5.50	11.00	11.25	9.75	2.125	575,000	765,000	385.00

A 1

* SEE NOTE 4

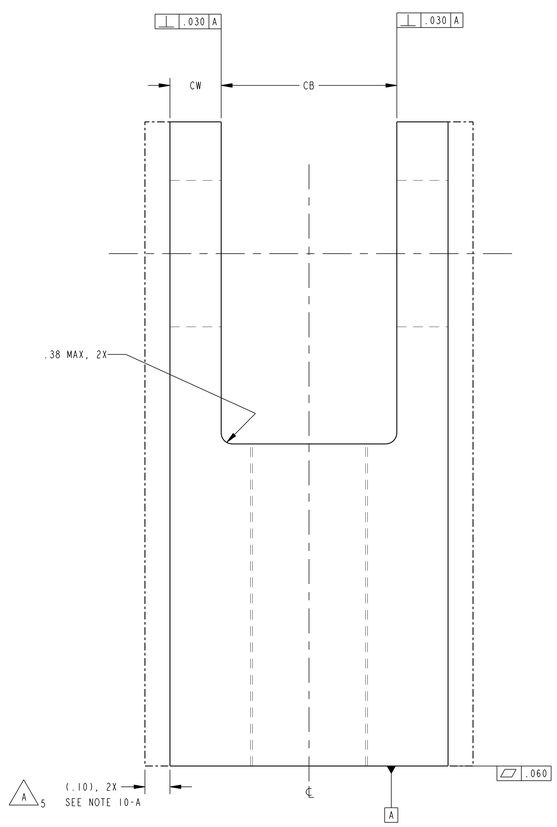

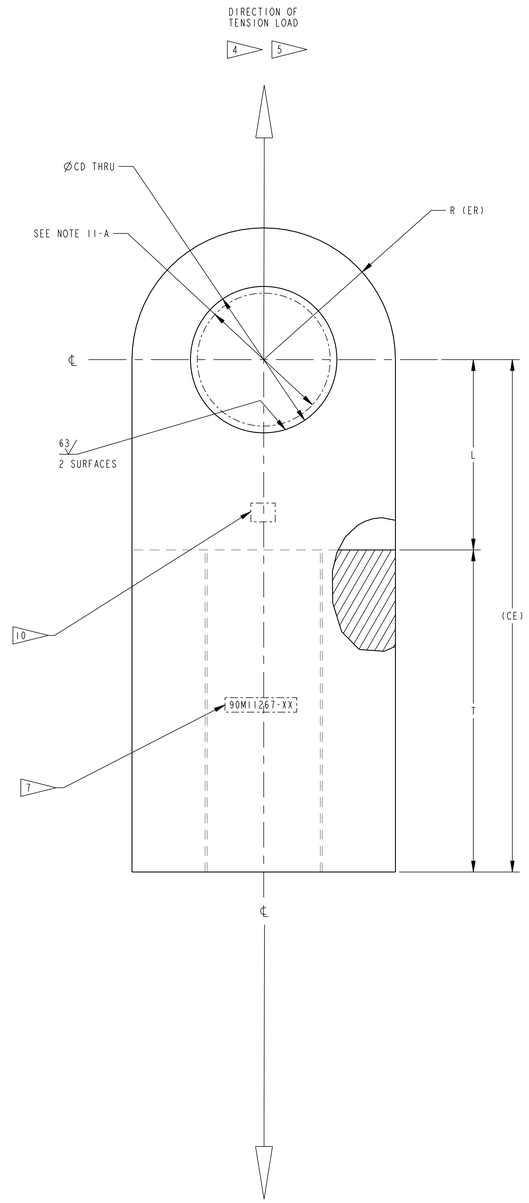

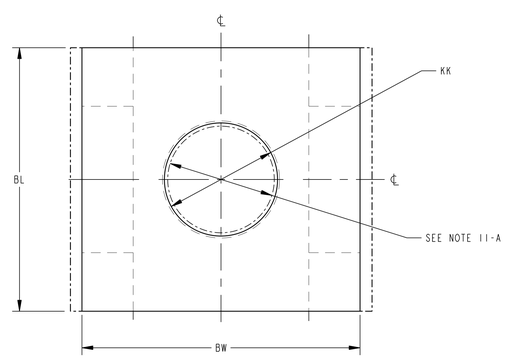

GENERAL NOTES (UNLESS OTHERWISE SPECIFIED):

1. REMOVE ALL BURRS AND BREAK ALL SHARP EDGES.
2. 250 ALL MACHINED SURFACES UNLESS OTHERWISE SPECIFIED.
3. MATERIAL: 4130 AIRCRAFT QUALITY STEEL BAR PER MIL-S-6758 OR 4340 AIRCRAFT QUALITY STEEL BAR PER MIL-S-5000, EACH PART SHALL MEET THE STRENGTH REQUIREMENT OF NOTE 11.
4. LOAD CAPACITY FOR EACH CLEVIS IS GIVEN IN TABLE A. THE LOADS GIVEN REPRESENT THE MAXIMUM LOAD ALLOWED WHEN LOADED VERTICALLY AS SHOWN. VARIATION FROM THIS LOAD CASE WILL CAUSE A REDUCTION IN THE MAXIMUM LOAD ALLOWED.
5. COMPONENTS NOT INTENDED FOR USE AS LIFTING OR HOISTING EQUIPMENT.
6. GEOMETRIC DIMENSIONING AND TOLERANCING PER ASME Y14.5M-1994.
7. STEEL STAMP PART NO. IN APPROXIMATE LOCATION INDICATED (BOTH NEAR AND FAR SIDES) USING .25 HIGH CHARACTERS.
8. (A 2) PREPARE PAINT SURFACES PER PAINT MANUFACTURER'S RECOMMENDATIONS AND ABRASIVE CLEAN WHERE NECESSARY. PRIME USING A POLYURETHANE PRIMER AND PAINT USING POLYURETHANE ENAMEL TOP COAT (REFERENCE: SHERWIN WILLIAMS POLANE F63) DARK RED NO. 21105 PER FEDERAL STANDARD 595B. DO NOT PAINT THRU HOLES OR THREADED HOLES. (A 3)
9. LIBERALLY APPLY TRIFLOW OR LIQUID WRENCH OR EQUAL LUBRICANT TO DRILLED OR TAPPED HOLES TO PREVENT CORROSION.
10. THE ULTIMATE TENSILE STRENGTH OF THE FINISHED PART SHALL BE BETWEEN 140 AND 180 KSI. TO ENSURE THIS, THE FOLLOWING PROCEDURE WILL BE FOLLOWED:
    A. MACHINE DIMENSIONS "CD", "CW", AND "KK" TO WITHIN .10 ± .03, AND DIMENSION "BW" TO WITHIN .20 ± .06 OF THEIR INDICATED FINISHED VALUES. MACHINE ALL OTHER DIMENSIONS TO THEIR INDICATED FINISHED VALUES.
    B. PERFORM A ROCKWELL SURFACE HARDNESS TEST IN THE AREAS INDICATED BY FLAG NOTE 11 ON THE NEAR AND FAR SIDES OF THE PART.
    C. IF THE INDICATED ULTIMATE TENSILE STRENGTH IS BETWEEN 140 AND 180 KSI, THEN MACHINE DIMENSIONS "CD", "BW", "CW", AND "KK" TO THEIR INDICATED FINISHED VALUES. PROCEED TO STEP F.
    D. IF THE INDICATED ULTIMATE TENSILE STRENGTH IS BELOW 140 KSI, THEN THE PART SHOULD BE RE-HEAT TREATED. AFTER HEAT TREATING, MACHINE DIMENSIONS "CD", "BW", "CW", AND "KK" TO THEIR INDICATED FINISHED VALUES. PROCEED TO STEP F.
    E. IF THE INDICATED ULTIMATE TENSILE STRENGTH IS ABOVE 180 KSI, THEN THE STRESS AND MATERIALS ORGANIZATIONS THAT SIGNED THE ORIGINAL DRAWING SHOULD BE CONTACTED TO OBTAIN ACCEPTANCE OF THE PART. MACHINE DIMENSIONS "CD", "BW", "CW", AND "KK" TO THEIR INDICATED FINISHED VALUES. (A 4)
    F. PERFORM A FINAL ROCKWELL SURFACE HARDNESS TEST IN THE AREAS INDICATED BY FLAG NOTE 10 ON THE NEAR AND FAR SIDES OF THE PART. WRITTEN CERTIFICATION OF THIS HARDNESS AND THE CALCULATED STRENGTH SHALL BE PROVIDED FOR EACH PART PRODUCED.

SUGGESTED VENDOR SOURCES:

1. JOSEPH T. RYERSON & SON
   BOX 24208
   CHATTANOOGA, TN 37422
   423-499-3500

FIND NO.	SHEET NO.	TOT REQ'D		PART NO.	DESCRIPTION	VEND NO.	REMARKS
9	1	-	F	90M11267-9	FEMALE CLEVIS, 6.50 PIN SIZE	1	MAT'L PER NOTE 3
8	1	-	F	90M11267-8	FEMALE CLEVIS, 8.00 PIN SIZE	1	MAT'L PER NOTE 3
7	1	-	F	90M11267-7	FEMALE CLEVIS, 7.00 PIN SIZE	1	MAT'L PER NOTE 3
6	1	-	F	90M11267-6	FEMALE CLEVIS, 6.00 PIN SIZE	1	MAT'L PER NOTE 3
5	1	-	F	90M11267-5	FEMALE CLEVIS, 5.00 PIN SIZE	1	MAT'L PER NOTE 3
4	1	-	F	90M11267-4	FEMALE CLEVIS, 4.00 PIN SIZE	1	MAT'L PER NOTE 3
3	1	-	F	90M11267-3	FEMALE CLEVIS, 3.50 PIN SIZE	1	MAT'L PER NOTE 3
2	1	-	F	90M11267-2	FEMALE CLEVIS, 3.00 PIN SIZE	1	MAT'L PER NOTE 3
1	1	-	F	90M11267-1	FEMALE CLEVIS, 2.50 PIN SIZE	1	MAT'L PER NOTE 3

A=ASSEMBLY/SUB-ASSEMBLY/INSTALLATION E=EXISTING ITEM/FACILITY F=FABRICATED ITEM M=MODIFIED ITEM P=PURCHASED ITEM

FIND NO. 1 THRU 9

SCALE: N.T.S.

DESIGN ENGINEER R. WADE SHORT 5-30-00	STRESS V. RICHARD 5-30-00	UNLESS OTHERWISE SPECIFIED TOLERANCES ARE FRACTIONS ± 1/16 ± 1°/2 DECIMALS .X- ± .06 .XX- ± .03 .XXX- ± .010 ∠- ± .50° (DIMENSIONS ARE IN INCHES, DO NOT SCALE DRAWING)	STANDARD FEMALE CLEVIS
DETAILER R. WADE SHORT 5-30-00	TEST ENGINEER/PROJECTOR RICKY WILBANKS 5-30-00		
	MATERIALS W.D. HAMILTON 5-30-00		
	INDUSTRIAL SAFETY ALVIN EIDSON 5-30-00		
	CHECKER STEVEN FISCHER 5-30-00		
	ETSI BRANCH CHIEF/TEAM LEAD SCOTT MCCLUNEY 5-31-00	DRAWN BY A. HANNAH	NEXT ASSEMBLY DATE 07-29-13

SPECIAL TEST EQUIPMENT DESIGN BRANCH - ET50
GEORGE C. MARSHALL SPACE FLIGHT CENTER
NATIONAL AERONAUTICS AND SPACE ADMINISTRATION
HUNTSVILLE, ALABAMA

90M11267 REVISION A

SIZE E SHEET 1 OF 1