NOTICE: When Government drawings, specifications, or other data are used for any purpose other than in connection with a definitely related Government procurement operation, the United States Government thereby incurs no responsibility nor obligation whatsoever; and the fact that the Government may have formulated, furnished, or in any way supplied the said drawings, specifications or other data is not to be regarded by implication or otherwise as in any manner licensing the holder or any other person or corporation, or conveying any rights or permission to manufacture, use, or sell any patented invention that may in any way be related thereto.

KSC CENTRAL CAMPUS
REPLACEMENT HEADQUARTERS BUILDING
PHASE 1
VOL. 1 OF 4

Hunton Brady ARCHITECTS

NATIONAL AERONAUTICS AND SPACE ADMINISTRATION

Kennedy Space Center, Florida

PROJ. NO. PCN 98745.1a

VICINITY MAP

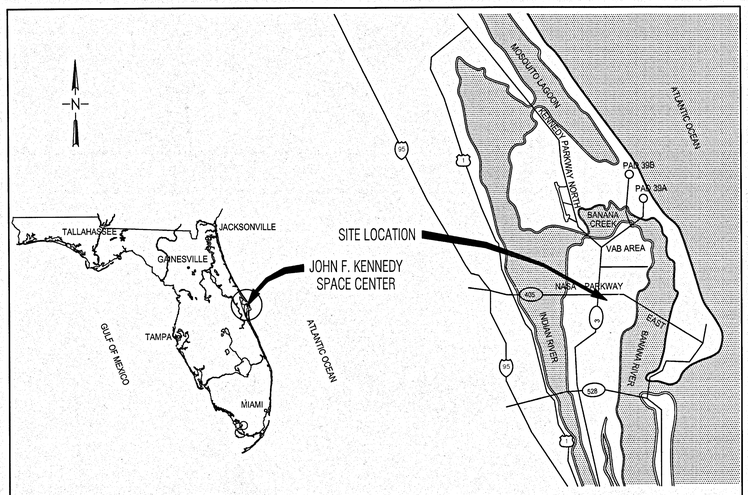

SITE MAP

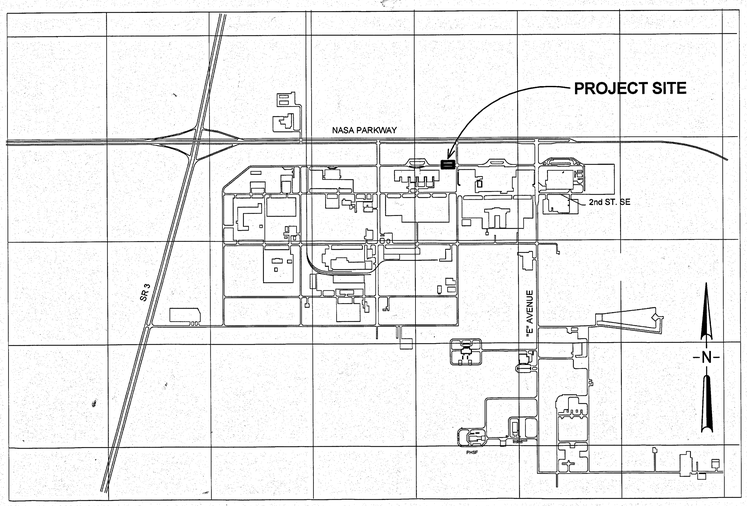

NASA KSC Export Control Office (ECO)
Export/SBU Determination Record

KSC CENTRAL CAMPUS **REPLACEMENT HEADQUARTERS BUILDING** **PHASE 1** **VOL. 1 OF 4** **79K39622**
SENSITIVE BUT UNCLASSIFIED (SBU) INSTRUCTIONS: This item must be reviewed under the requirements for "Sensitive But Unclassified Information" as described in NPR 1600.1, Chapter 5. **http://nodis-dms.gsfc.nasa.gov**

	Yes	No	SBU Reviewer's Signature	Date	Company/ Org
Document contains SBU?		X	*Wallace R. Schroeder*	12-20-13	TA-B3A

EXPORT CONTROL (EC) INSTRUCTIONS: Attach the document requiring an export determination. Contact the KSC ECO Help Desk (867-9209) for help in completing this form. **http://exportcontrol.ksc.nasa.gov/**

Contractor EC Reviewer's Name and Organization	*Contractor EC Reviewer's Signature*	*Date*
NASA ECO Reviewer's Name and Organization	*NASA ECO Reviewer's Signature*	*Date*
Wallace R. Schroeder / TA-B3A		12-20-13

	EXPORT DETERMINATION *(Check one box only)*	
EAR 99 / **NLR**	☒	The information contained in the document is technical in content, but is not technical data as defined by the ITAR or the EAR, and therefore is EAR 99 NLR (no export license required). [General Prohibition Six (Embargo) applies to all items subject to the EAR, i.e. items on the CCL and within EAR 99 NLR. You may not make an export or re-export contrary to the provisions of part 748 (Embargos and Other Special Controls) of the EAR and 22 CFR part 126.1 of the ITAR.]
EAR Controlled	☐	This document is within the purview of the Export Administration Regulations (EAR), 15 CFR 730-774, and is export controlled. It may not be transferred to foreign nationals in the U.S. or abroad without specific approval of a knowledgeable NASA export control official, and/or unless an export license or license exception is obtained/available from the Bureau of Industry and Security, United States Department of Commerce. Violations of these regulations are punishable by fine, imprisonment, or both.
ITAR Controlled	☐	This document contains information which falls under the purview of the U.S. Munitions List (USML), as defined in the International Traffic in Arms Regulations (ITAR), 22 CFR 120-130, and is export controlled. It shall not be transferred to foreign nationals, in the U.S. or abroad, without specific approval of a knowledgeable NASA export control official, and/or unless an export license or license exemption is obtained/available from the United States Department of State. *Violations of these regulations are punishable by fine, imprisonment, or both.*

KSC FORM 7-657V2 NS (REV. 09/11) PREVIOUS EDITIONS ARE OBSOLETE

ARCHITECT
HUNTONBRADY ARCHITECTS, P.A.
800 North Magnolia Ave., Suite 600
Orlando, Florida 32803
407.839.0886
License AAC001744

SYM	ZONE		DATE	APPROVED

REVISIONS

Hunton Brady ARCHITECTS
HuntonBrady Architects P.A.
800 North Magnolia Avenue
Suite 600
Orlando, Florida 32803

SIGNATURES	DATE
DRAWN Bryce Denker	12.18.13
CHECKED Robert Davidescu	12.18.13
SUBMITTED ARCH/ENG OF RECORD Drew Kresoski	12.18.13
APPROVED Steve Beiflower	12.18.13
Thomas Wilcox	12.19.13
Wallace R Schroeder	12.20.13

NATIONAL AERONAUTICS AND SPACE ADMINISTRATION
JOHN F. KENNEDY SPACE CENTER, NASA
KENNEDY SPACE CENTER, FLORIDA

KSC CENTRAL CAMPUS
REPLACEMENT HEADQUARTERS BUILDING
PHASE 1
VOL. 1 OF 4

COVER SHEET VOL. 1

FILE NO.	SIZE	DWG. NO.
C-12070.00	F	79K39622 VOL 1
PCN. NO. 98745.1a		SHEET 1 of 174

G000

KSC FORM 1-11 (3/76)(C/G 3/94)

NOTICE: When Government drawings, specifications, or other data are used for any purpose other than in connection with a definitely related Government procurement operation, the United States Government thereby incurs no responsibility nor obligation whatsoever; and the fact that the Government may have formulated, furnished, or in any way supplied the said drawings, specifications or other data is not to be regarded by implication or otherwise as in any manner licensing the holder or any other person or corporation, or conveying any rights or permission to manufacture, use, or sell any patented invention that may in any way be related thereto.

DRAWING INDEX

VOL. 1

GENERAL			
1	G000	COVER SHEET VOL. 1	■
2	G001	DRAWING INDEX VOL. 1	■
3	G002	DRAWING INDEX VOL. 2	■
4	G003	DRAWING INDEX VOL. 3	■
5	G004	DRAWING INDEX VOL. 4	■
6	G011	PROJECT DATA	■
7	G110	LIFE SAFETY PLAN - 1ST LEVEL	■
8	G120	LIFE SAFETY PLAN - 2ND LEVEL	■
9	G130	LIFE SAFETY PLAN - 3RD LEVEL	■
10	G140	LIFE SAFETY PLAN - 4TH LEVEL	■
11	G150	LIFE SAFETY PLAN - 5TH LEVEL	■
12	G160	LIFE SAFETY PLAN - 6TH LEVEL	■
13	G170	LIFE SAFETY PLAN - 7TH LEVEL & PENTHOUSE	■
CIVIL			
14	C001	CIVIL GENERAL NOTES	■
15	C002	LEGEND AND ABBREVIATIONS	■
16	C003	CONSTRUCTION PHASING OVERALL PLAN	■
17	C004	CONSTRUCTION PHASING PLAN	■
18	C005	CONSTRUCTION PHASING PLAN	■
19	C006	CONSTRUCTION PHASING PLAN	■
20	C007	CONSTRUCTION PHASING PLAN	■
21	C101	SITE AND KEY PLAN	■
22	C102	EXISTING CONDITIONS PLAN	■
23	C103	EXISTING CONDITIONS PLAN	■
24	C104	EXISTING CONDITIONS PLAN	■
25	C105	EXISTING CONDITIONS PLAN	■
26	C106	SOIL BORING PROFILES	■
27	C107	SOIL BORING PROFILES	■
28	C108	SOIL BORING PROFILES	■
29	C109	SOIL BORING PROFILES	■
30	C110	DEMOLITION PLAN	■
31	C111	DEMOLITION PLAN	■
32	C112	DEMOLITION PLAN	■
33	C113	DEMOLITION PLAN	■
34	C114	DEMOLITION PLAN - OPTION C-2	■
35	C115	SITE PLAN	■
36	C116	SITE PLAN	■
37	C117	SITE PLAN	■
38	C118	SITE PLAN	■
39	C119	SITE PLAN - OPTION C-2	■
40	C120	COORDINATE TABLES	■
41	C121	COORDINATE TABLES	■
42	C122	COORDINATE TABLES	■
43	C123	COORDINATE PLAN	■
44	C124	COORDINATE PLAN	■
45	C125	COORDINATE PLAN	■
46	C126	COORDINATE PLAN	■
47	C127	COORDINATE PLAN - OPTION C-2	■
48	C128	ROADWAY AND PARKING TYPICAL SECTIONS	■
49	C129	1ST STREET SE PLAN AND PROFILE	■
50	C130	1ST STREET SE PLAN AND PROFILE	■
51	C131	D AVENUE SE PLAN AND PROFILE	■
52	C132	GRADING AND DRAINAGE PLAN	■
53	C133	SUPPLEMENTAL GRADING PLAN	■
54	C134	GRADING AND DRAINAGE PLAN	■
55	C135	GRADING AND DRAINAGE PLAN	■
56	C136	GRADING AND DRAINAGE PLAN	■
57	C137	GRADING AND DRAINAGE PLAN - OPTION C-2	■
58	C138	SUPPLEMENTAL GRADING PLAN - OPTION C-2	■
59	C139	MISCELLANEOUS GRADING AND DRAINAGE DETAILS	■
60	C140	STORM SEWER AND DITCH PROFILES	■
61	C141	STORM SEWER AND DITCH PROFILES	■
62	C142	STORM SEWER AND DITCH PROFILES	■
63	C143	DRAINAGE PIPES AND STRUCTURE TABLES	■
64	C144	UTILITIES PLAN	■
65	C145	UTILITIES PLAN	■
66	C146	UTILITIES PLAN	■
67	C147	UTILITIES PLAN	■
68	C148	UTILITY PROFILES AND TABLES	■
69	C149	EROSION CONTROL AND SWPPP NOTES	■
70	C150	EROSION CONTROL AND SWPPP PLAN	■
71	C151	EROSION CONTROL DETAILS	■
72	C201	CIVIL DETAILS	■
73	C202	CIVIL DETAILS	■
74	C203	CIVIL DETAILS	■
75	C204	CIVIL DETAILS	■
76	C205	CIVIL DETAILS	■
77	C206	CIVIL DETAILS	■
78	C207	CIVIL DETAILS	■
79	C208	CIVIL DETAILS	■
80	C209	CIVIL DETAILS	■
81	C210	CIVIL DETAILS	■
82	C211	CIVIL DETAILS	■
83	C212	CIVIL DETAILS	■
LANDSCAPE			
84	L101	HARDSCAPE PLAN	■
85	L102	HARDSCAPE COORDINATES PLAN	■
86	L103	HARDSCAPE DETAILS	■
87	L104	LANDSCAPE PLAN	■
88	L105	LANDSCAPE DETAILS	■
89	L106	IRRIGATION PLAN	■
90	L107	IRRIGATION DETAILS	■
91	L108	IRRIGATION DETAILS AND NOTES	■

DRAWING INDEX

VOL. 1

STRUCTURAL			
92	S001	GENERAL NOTES	■
93	S010	COMPONENTS AND CLADDING PRESSURE DIAGRAMS	■
94	S011	COMPONENTS AND CLADDING PRESSURE DIAGRAMS	■
95	S012	COMPONENTS AND CLADDING PRESSURE DIAGRAMS	■
96	S013	COMPONENTS AND CLADDING PRESSURE DIAGRAMS	■
97	S015	ELEVATOR LOAD PLANS	■
98	S020	LOAD KEY PLAN - SLAB ON GRADE	■
99	S021	LOAD KEY PLAN - 2ND LEVEL	■
100	S022	LOAD KEY PLAN - 3RD-6TH LEVEL	■
101	S023	LOAD KEY PLAN - 7TH LEVEL	■
102	S024	LOAD KEY PLAN - ROOF LEVEL	■
103	S025	LOAD KEY PLAN - HIGH ROOF LEVEL	■
104	S100	FOUNDATION PLAN - OVERALL	■
105	S101	FOUNDATION PLAN - AREA 1	■
106	S101D	DIMENSION PLAN - FOUNDATION - AREA 1	■
107	S102	FOUNDATION PLAN - AREA 2 AND 3	■
108	S102D	DIMENSION PLAN - FOUNDATION - AREA 2 AND 3	■
109	S103	FOUNDATION PLAN SERVICE YARD	■
110	S110	SLAB ON GRADE PLAN - OVERALL	■
111	S111	SLAB ON GRADE PLAN - AREA 1	■
112	S111D	DIMENSION PLAN - SLAB ON GRADE - AREA 1	■
113	S112	SLAB ON GRADE PLAN - AREA 2 AND 3	■
114	S112D	DIMENSION PLAN - SLAB ON GRADE - AREA 2 AND 3	■
115	S120	FLOOR FRAMING PLAN - 2ND LEVEL OVERALL	■
116	S121	FLOOR FRAMING PLAN - 2ND LEVEL - AREA 1	■
117	S121D	DIMENSION - 2ND LEVEL - AREA 1	■
118	S122	ROOF FRAMING PLAN - 2ND LEVEL - AREA 2 AND 3	■
119	S122D	DIMENSION PLAN - 2ND LEVEL - AREA 2 AND 3	■
120	S131	FLOOR FRAMING PLAN - 3RD LEVEL - AREA 1	■
121	S131D	DIMENSION PLAN - 3RD LEVEL - AREA 1	■
122	S141	FLOOR FRAMING PLAN - 4TH LEVEL - AREA 1	■
123	S141D	DIMENSION PLAN - 4TH LEVEL - AREA 1	■
124	S151	FLOOR FRAMING PLAN - 5TH LEVEL - AREA 1	■
125	S151D	DIMENSION PLAN - 5TH LEVEL - AREA 1	■
126	S161	FLOOR FRAMING PLAN - 6TH LEVEL - AREA 1	■
127	S161D	DIMENSION PLAN - 6TH LEVEL - AREA 1	■
128	S171	FLOOR FRAMING PLAN - 7TH LEVEL - AREA 1	■
129	S171D	DIMENSION PLAN - 7TH LEVEL - AREA 1	■
130	S181	ROOF FRAMING PLAN - AREA 1	■
131	S181D	DIMENSION PLAN - ROOF LEVEL - AREA 1	■
132	S191	HIGH ROOF FRAMING PLAN - AREA 1	■
133	S191D	DIMENSION PLAN - HIGH ROOF - AREA 1	■
134	S202	SHEAR WALL ELEVATIONS	■
135	S203	SHEAR WALL ELEVATIONS	■
136	S206	FRAMING ELEVATIONS	■
137	S207	FRAMING ELEVATIONS	■
138	S211	CONCRETE BEAM SCHEDULE	■
139	S212	CONCRETE BEAM SCHEDULE	■
140	S215	COLUMN SCHEDULE	■
141	S221	SHEAR WALL PARTIAL PLANS	■
142	S231	FRAMING PARTIAL PLANS	■
143	S401	CONCRETE TYPICAL DETAILS	■
144	S402	CONCRETE TYPICAL DETAILS	■
145	S403	CONCRETE TYPICAL DETAILS	■
146	S409	SHEAR WALL PILE CAP DETAILS	■
147	S410	PILE CAP DETAILS	■
148	S411	FOUNDATION TYPICAL DETAILS	■
149	S412	FOUNDATION TYPICAL DETAILS	■
150	S413	FOUNDATION TYPICAL DETAILS	■
151	S414	FOUNDATION TYPICAL DETAILS	■
152	S421	TYPICAL DETAILS	■
153	S422	TYPICAL DETAILS	■
154	S423	TYPICAL DETAILS	■
155	S424	TYPICAL DETAILS	■
156	S425	TYPICAL DETAILS	■
157	S431	FRAMING SECTIONS AND DETAILS	■
158	S432	FRAMING SECTIONS AND DETAILS	■
159	S433	FRAMING SECTIONS AND DETAILS	■
160	S434	FRAMING SECTIONS AND DETAILS	■
161	S435	FRAMING SECTIONS AND DETAILS	■
162	S436	FRAMING SECTIONS AND DETAILS	■
163	S437	FRAMING SECTIONS AND DETAILS	■
164	S438	FRAMING SECTIONS AND DETAILS	■
165	S439	FRAMING SECTIONS AND DETAILS	■
166	S440	FRAMING SECTIONS AND DETAILS	■
167	S441	FRAMING SECTIONS AND DETAILS	■
168	S442	FRAMING SECTIONS AND DETAILS	■
169	S501	STEEL FRAMING TYPICAL DETAILS	■
170	S502	STEEL FRAMING TYPICAL DETAILS	■
171	S511	COMPOSITE STEEL FRAMING TYPICAL DETAILS	■
172	S512	COMPOSITE STEEL FRAMING TYPICAL DETAILS	■
173	S601	TYPICAL MASONRY DETAILS	■
174	S602	TYPICAL MASONRY DETAILS	■

OWNER
National Aeronautics and Space Administration

ARCHITECT
HUNTONBRADY ARCHITECTS, P.A.
800 North Magnolia Ave., Suite 600
Orlando, Florida 32803
407.839.0886
License AAC001744

STRUCTURAL
Walter P. Moore and Associates, Inc.
300 S. Orange Avenue, Suite 875
Orlando, Florida 32801
407.418.2218

MECHANICAL, ELECTRICAL, PLUMBING, FIRE, TELECOM.
Affiliated Engineers SE, Inc.
3007 SW Williston Road
Gainesville, Florida 32608
352.376.5500

CIVIL
Jones Edmunds & Associates
3910 S. Washington Ave., Suite 210
Titusville, FL 32780
321.269.2950

LANDSCAPE
Herbert Halback, Inc.
135 West Central Blvd., Suite 450
Orlando, Florida 32801
407.422.1449

FOOD SERVICE CONSULTANT
Food Service Design Associates
PO BOX 809
Norwich, VT 05055
802.649.0212

LEED CONSULTANT
exp U.S. Services Inc.
2601 Westhall Lane
Maitland, FL 32751
407.660.0088

SYM	ZONE		DATE	APPROVED

REVISIONS

Hunton Brady ARCHITECTS
HuntonBrady Architects P.A.
800 North Magnolia Avenue
Suite 600
Orlando, Florida 32803

SIGNATURES	DATE
DRAWN Bryce Denker	12.18.13
CHECKED Robert Davidescu	12.18.13
SUPERVISED ARCHITECT OF RECORD Drew Kreciol	12.18.13
ST of LICENSURE: FL LICENSE NO: AAC001744	
APPROVED Steve Bellflower	12-18-13
Thomas Wilczek	12-19-13

NATIONAL AERONAUTICS AND SPACE ADMINISTRATION
JOHN F. KENNEDY SPACE CENTER, NASA
KENNEDY SPACE CENTER, FLORIDA

KSC CENTRAL CAMPUS
REPLACEMENT HEADQUARTERS BUILDING
PHASE 1
VOL. 1 OF 4

DRAWING INDEX VOL. 1

FILE NO.	SIZE	DWG. NO.
C-12070.00	F	79K39622 VOL 1
PCN. NO. 98745.1a		SHEET 2

G001

KSC FORM 1-11 (3/76)(C/G 3/94)

NOTICE: When Government drawings, specifications, or other data are used for any purpose other than in connection with a definitely related Government procurement operation, the United States Government thereby incurs no responsibility nor obligation whatsoever; and the fact that the Government may have formulated, furnished, or in any way supplied the said drawings, specifications or other data is not to be regarded by implication or otherwise as in any manner licensing the holder or any other person or corporation, or conveying any rights or permission to manufacture, use, or sell any patented invention that may in any way be related thereto.

DRAWING INDEX

VOL. 2

GENERAL			
1	G200	COVER SHEET VOL. 2	■
2	G201	DRAWING INDEX VOL. 1	■
3	G202	DRAWING INDEX VOL. 2	■
4	G203	DRAWING INDEX VOL. 3	■
5	G204	DRAWING INDEX VOL. 4	■
ARCHITECTURAL			
6	A001	NOTE AND SYMBOL LEGEND	■
7	A011	DOOR LEGEND	■
8	A012	DOOR SCHEDULE	■
9	A013	DOOR SCHEDULE	■
10	A014	DOOR SCHEDULE	■
11	A021	DOOR DETAILS	■
12	A031	INTERIOR GLAZED OPENINGS	■
13	A032	INTERIOR GLAZED OPENINGS	■
14	A033	INTERIOR GLAZED OPENINGS	■
15	A034	INTERIOR GLAZED OPENINGS	■
16	A035	INTERIOR GLAZED OPENINGS	■
17	A036	INTERIOR GLAZED OPENINGS	■
18	A037	INTERIOR GLAZED OPENINGS	■
19	A038	INTERIOR GLAZED OPENINGS	■
20	A041	INTERIOR PARTITION TYPES	■
21	A042	INTERIOR PARTITION TYPES	■
22	A061	TYPICAL MOUNTING HEIGHTS	■
23	A101	ARCHITECTURAL SITE PLAN	■
24	A102	ARCHITECTURAL SITE FEATURES	■
25	A103	ARCHITECTURAL SITE FEATURES	■
26	A110	FLOOR PLAN - 1ST LEVEL OVERALL	■
27	A111	FLOOR PLAN - 1ST LEVEL AREA 1	■
28	A111D	DIMENSION PLAN - 1ST LEVEL AREA 1	■
29	A112	FLOOR PLAN - 1ST LEVEL AREA 2 & 3	■
30	A112D	DIMENSION PLAN - 1ST LEVEL AREA 2 & 3	■
31	A120	FLOOR PLAN - 2ND LEVEL OVERALL	■
32	A121	FLOOR PLAN - 2ND LEVEL AREA 1	■
33	A121D	DIMENSION PLAN - 2ND LEVEL AREA 1	■
34	A122	ROOF PLAN - 1ST LEVEL AREA 2 & 3	■
35	A122D	DIMENSION ROOF PLAN - AREA 2 & 3	■
36	A131	FLOOR PLAN - 3RD LEVEL	■
37	A131D	DIMENSION PLAN - 3RD LEVEL	■
38	A141	FLOOR PLAN - 4TH LEVEL	■
39	A141D	DIMENSION PLAN - 4TH LEVEL	■
40	A151	FLOOR PLAN - 5TH LEVEL	■
41	A151D	DIMENSION PLAN - 5TH LEVEL	■
42	A161	FLOOR PLAN - 6TH LEVEL	■
43	A161D	DIMENSION PLAN - 6TH LEVEL	■
44	A171	FLOOR PLAN - 7TH LEVEL	■
45	A171D	DIMENSION PLAN - 7TH LEVEL	■
46	A181	ROOF PLAN	■
47	A181D	ROOF DIMENSION PLAN	■
48	A191	HIGH ROOF PLAN	■
49	A201	EXTERIOR ELEVATION	■
50	A202	EXTERIOR ELEVATION	■
51	A203	EXTERIOR ELEVATION	■
52	A204	EXTERIOR ELEVATION	■
53	A205	EXTERIOR ELEVATIONS	■
54	A206	EXTERIOR ELEVATIONS	■
55	A211	EXTERIOR GLAZED OPENINGS	■
56	A212	EXTERIOR GLAZED OPENINGS	■
57	A213	EXTERIOR GLAZED OPENINGS	■
58	A214	EXTERIOR GLAZED OPENINGS	■
59	A215	EXTERIOR GLAZED OPENINGS	■
60	A221	BUILDING SECTIONS	■
61	A222	BUILDING SECTION	■
62	A223	BUILDING SECTION	■
63	A231	EXTERIOR WALL SECTIONS	■
64	A232	EXTERIOR WALL SECTIONS	■
65	A233	EXTERIOR WALL SECTIONS	■
66	A234	EXTERIOR WALL SECTIONS	■
67	A235	EXTERIOR WALL SECTIONS	■
68	A236	EXTERIOR WALL SECTIONS	■
69	A241	EXTERIOR SECTION DETAILS	■
70	A242	EXTERIOR SECTION DETAILS	■
71	A243	EXTERIOR SECTION DETAILS	■
72	A244	EXTERIOR SECTION DETAILS	■
73	A245	EXTERIOR SECTION DETAILS	■
74	A246	EXTERIOR SECTION DETAILS	■
75	A247	EXTERIOR SECTION DETAILS	■
76	A248	EXTERIOR SECTION DETAILS	■
77	A249	EXTERIOR SECTION DETAILS	■
78	A250	EXTERIOR SECTION DETAILS	■
80	A251	EXTERIOR SECTION DETAILS	■
79	A252	EXTERIOR SECTION DETAILS	■
81	A255	TYPICAL ENLARGED DETAILS	■
82	A256	TYPICAL ENLARGED DETAILS	■
83	A257	EXTERIOR DOOR DETAILS	■
84	A261	EXTERIOR PLAN DETAILS	■
85	A262	EXTERIOR PLAN DETAILS	■
86	A263	EXTERIOR PLAN DETAILS	■
87	A264	EXTERIOR PLAN DETAILS	■
88	A265	EXTERIOR PLAN DETAILS	■
89	A266	EXTERIOR PLAN DETAILS	■
90	A267	EXTERIOR PLAN DETAILS	■
91	A311	ENLARGED ELEVATOR PLANS	■
92	A312	ELEVATOR SECTIONS	■
93	A313	ELEVATOR SECTIONS	■
94	A314	ELEVATOR DETAILS'	■
95	A321	ENLARGED STAIR PLANS	■
96	A322	ENLARGED STAIR PLANS	■
97	A323	STAIR SECTIONS	■
98	A324	STAIR SECTIONS	■
99	A325	STAIR SECTIONS	■
100	A326	STAIR SECTIONS	■
101	A327	STAIR SECTIONS	■
102	A328	STAIR DETAILS	■
103	A411	REFLECTED CEILING PLAN - 1ST LEVEL AREA 1	■
104	A412	REFLECTED CEILING PLAN - 1ST LEVEL AREA 2 & 3	■
105	A421	REFLECTED CEILING PLAN - 2ND LEVEL	■
106	A431	REFLECTED CEILING PLAN - 3RD LEVEL	■
107	A441	REFLECTED CEILING PLAN - 4TH LEVEL	■
108	A451	REFLECTED CEILING PLAN - 5TH LEVEL	■
109	A461	REFLECTED CEILING PLAN - 6TH LEVEL	■
110	A471	REFLECTED CEILING PLAN - 7TH LEVEL	■
111	A501	ENLARGED FLOOR PLANS	■
112	A502	ENLARGED FLOOR PLANS	■
113	A503	ENLARGED FLOOR PLANS	■
114	A504	ENLARGED FLOOR PLANS	■
115	A505	ENLARGED FLOOR PLANS	■
116	A506	ENLARGED FLOOR PLANS	■
117	A507	ENLARGED FLOOR PLANS	■
118	A508	ENLARGED FLOOR PLANS	■
119	A509	ENLARGED FLOOR PLANS	■
120	A510	ENLARGED FLOOR PLANS	■
121	A511	ENLARGED FLOOR PLANS	■
122	A512	ENLARGED FLOOR PLANS	■
123	A513	ENLARGED FLOOR PLANS	■
124	A514	ENLARGED FLOOR PLANS	■
125	A601	INTERIOR ELEVATIONS	■
126	A602	INTERIOR ELEVATIONS	■
127	A603	INTERIOR ELEVATIONS	■
128	A604	INTERIOR ELEVATIONS	■
129	A605	INTERIOR ELEVATIONS	■
130	A606	INTERIOR ELEVATIONS	■
131	A607	INTERIOR ELEVATIONS	■
132	A608	INTERIOR ELEVATIONS	■
133	A609	INTERIOR ELEVATIONS	■
134	A610	INTERIOR ELEVATIONS	■
135	A611	INTERIOR ELEVATIONS	■
136	A612	INTERIOR ELEVATIONS	■
137	A613	INTERIOR ELEVATIONS	■
138	A614	INTERIOR ELEVATIONS	■
139	A615	INTERIOR ELEVATIONS	■
140	A616	INTERIOR ELEVATIONS	■
141	A617	INTERIOR ELEVATIONS	■
142	A618	INTERIOR ELEVATIONS	■
143	A619	INTERIOR ELEVATIONS	■
144	A620	INTERIOR ELEVATIONS	■
145	A621	INTERIOR WALL SECTIONS	■
146	A622	INTERIOR WALL SECTIONS	■
147	A623	INTERIOR WALL SECTIONS	■
148	A624	INTERIOR WALL SECTIONS	■
149	A631	INTERIOR SECTION DETAILS	■
150	A632	INTERIOR SECTION DETAILS	■
151	A633	INTERIOR SECTION DETAILS	■
152	A634	INTERIOR SECTION DETAILS	■
153	A635	INTERIOR SECTION DETAILS	■
154	A636	INTERIOR SECTION DETAILS	■
155	A637	INTERIOR SECTION DETAILS	■
156	A651	INTERIOR PLAN DETAILS	■
157	A652	INTERIOR PLAN DETAILS	■
158	A653	INTERIOR PLAN DETAILS	■
159	A654	INTERIOR PLAN DETAILS	■
160	A655	INTERIOR PLAN DETAILS	■
161	A656	INTERIOR PLAN DETAILS	■
162	A657	INTERIOR PLAN DETAILS	■
163	A671	MILLWORK SECTIONS	■
164	A672	MILLWORK SECTIONS	■
165	A673	MILLWORK DETAILS	■
166	A701	FURNITURE SYSTEM DETAILS	■
167	A702	FURNITURE SYSTEM DETAILS	■
168	A703	FURNITURE SYSTEM DETAILS	■
169	A704	FURNITURE SYSTEM DETAILS	■
170	A711	FURNITURE/EQUIPMENT PLAN - 1ST LEVEL AREA 1	■
171	A712	FURNITURE/EQUIPMENT PLAN - 1ST LEVEL AREA 2 & 3	■
172	A721	FURNITURE/EQUIPMENT PLAN - 2ND LEVEL	■
173	A731	FURNITURE/EQUIPMENT PLAN - 3RD LEVEL	■
174	A741	FURNITURE/EQUIPMENT PLAN - 4TH LEVEL	■
175	A751	FURNITURE/EQUIPMENT PLAN - 5TH LEVEL	■
176	A761	FURNITURE/EQUIPMENT PLAN - 6TH LEVEL	■
177	A771	FURNITURE/EQUIPMENT PLAN - 7TH LEVEL	■
178	A801	ROOM FINISH LEGEND AND NOTES	■
179	A802	ROOM FINISH LEGEND	■
180	A811	FINISH PLAN - 1ST LEVEL AREA 1	■
181	A812	FINISH PLAN - 1ST LEVEL AREA 2 & 3	■
182	A821	FINISH PLAN - 2ND LEVEL	■
183	A831	FINISH PLAN - 3RD LEVEL	■
184	A841	FINISH PLAN - 4TH LEVEL	■
185	A851	FINISH PLAN - 5TH LEVEL	■
186	A861	FINISH PLAN - 6TH LEVEL	■
187	A871	FINISH PLAN - 7TH LEVEL	■
188	A881	PENTHOUSE FINISH PLAN	■
189	A911	FLOOR PATTERN PLAN - 1ST LEVEL AREA 1	■
190	A912	FLOOR PATTERN PLAN - 1ST LEVEL AREA 2 & 3	■
191	A921	FLOOR PATTERN PLAN - 2ND LEVEL	■
192	A931	FLOOR PATTERN PLAN - 3RD LEVEL	■
193	A941	FLOOR PATTERN PLAN - 4TH LEVEL	■
194	A951	FLOOR PATTERN PLAN - 5TH LEVEL	■
195	A961	FLOOR PATTERN PLAN - 6TH LEVEL	■
196	A971	FLOOR PATTERN PLAN - 7TH LEVEL	■

OWNER
National Aeronautics and Space Administration

ARCHITECT
HUNTONBRADY ARCHITECTS, P.A.
800 North Magnolia Ave., Suite 600
Orlando, Florida 32803
407.839.0886
License AAC001744

STRUCTURAL
Walter P. Moore and Associates, Inc.
300 S. Orange Avenue, Suite 875
Orlando, Florida 32801
407.418.2218

MECHANICAL, ELECTRICAL, PLUMBING, FIRE, TELECOM.
Affiliated Engineers SE, Inc.
3007 SW Williston Road
Gainesville, Florida 32608
352.376.5500

CIVIL
Jones Edmunds & Associates
3910 S. Washington Ave., Suite 210
Titusville, FL 32780
321.269.2950

LANDSCAPE
Herbert Halback, Inc.
135 West Central Blvd., Suite 450
Orlando, Florida 32801
407.422.1449

FOOD SERVICE CONSULTANT
Food Service Design Associates
PO BOX 809
Norwich, VT 05055
802.649.0212

LEED CONSULTANT
exp U.S. Services Inc.
2601 Westhall Lane
Maitland, FL 32751
407.660.0088

SYM	ZONE		DATE	APPROVED

REVISIONS

HuntonBrady ARCHITECTS

HuntonBrady Architects P.A.
800 North Magnolia Avenue
Suite 600
Orlando, Florida 32803

SIGNATURES	DATE
DRAWN Bryce Denker	12.18.13
CHECKED Robert Davidescu	12.18.13
SUBMITTED: ARCHENG OF RECORD Drew Krecicki	12.18.13
ST of LICENSURE: FL LICENSE NO: AAC001744	
APPROVED Steve Bellower	12.18.13
Thomas Wilczek	12.19.13

NATIONAL AERONAUTICS AND SPACE ADMINISTRATION
JOHN F. KENNEDY SPACE CENTER, NASA
KENNEDY SPACE CENTER, FLORIDA

KSC CENTRAL CAMPUS
REPLACEMENT HEADQUARTERS BUILDING
PHASE 1
VOL. 1 OF 4

DRAWING INDEX VOL. 2

FILE NO.	SIZE	DWG. NO.
C-12070.00	F	79K39622 VOL 1

PCN. NO. 98745.1a SHEET 3

G002

KSC FORM 1-11 (3/76)(C/G 3/94)

NOTICE: When Government drawings, specifications, or other data are used for any purpose other than in connection with a definitely related Government procurement operation, the United States Government thereby incurs no responsibility nor obligation whatsoever; and the fact that the Government may have formulated, furnished, or in any way supplied the said drawings, specifications or other data is not to be regarded by implication or otherwise as in any manner licensing the holder or any other person or corporation, or conveying any rights or permission to manufacture, use, or sell any patented invention that may in any way be related thereto.

DRAWING INDEX

VOL. 3

GENERAL			
1	G300	COVER SHEET VOL. 3	■
2	G301	DRAWING INDEX VOL. 1	■
3	G302	DRAWING INDEX VOL. 2	■
4	G303	DRAWING INDEX VOL. 3	■
5	G304	DRAWING INDEX VOL. 4	■
MECHANICAL			
6	M001	MECHANICAL SYMBOLS AND ABBREVIATIONS	■
7	M011	MECHANICAL SCHEDULES	■
8	M012	MECHANICAL SCHEDULES	■
9	M013	MECHANICAL SCHEDULES	■
10	M014	MECHANICAL SCHEDULES	■
11	M015	MECHANICAL SCHEDULES	■
12	M016	MECHANICAL SCHEDULES	■
13	M017	MECHANICAL SCHEDULES	■
14	M101	MECHANICAL SITE PLAN	■
15	M111	DUCT PLAN - 1ST LEVEL AREA 1	■
16	M112	DUCT PLAN - 1ST LEVEL AREA 2 & 3	■
17	M121	DUCT PLAN - 2ND LEVEL AREA 1	■
18	M122	DUCT PLAN - 2ND LEVEL AREA 2 & 3	■
19	M131	DUCT PLAN - 3RD LEVEL	■
20	M141	DUCT PLAN - 4TH LEVEL	■
21	M151	DUCT PLAN - 5TH LEVEL	■
22	M161	DUCT PLAN - 6TH LEVEL	■
23	M171	DUCT PLAN - 7TH LEVEL	■
24	M181	DUCT PLAN - ROOF	■
25	M211	PIPING PLAN - 1ST LEVEL AREA 1	■
26	M212	PIPING PLAN - 1ST LEVEL AREA 2 & 3	■
27	M221	PIPING PLAN - 2ND LEVEL AREA 1	■
28	M231	PIPING PLAN - 3RD LEVEL	■
29	M241	PIPING PLAN - 4TH LEVEL	■
30	M251	PIPING PLAN - 5TH LEVEL	■
31	M261	PIPING PLAN - 6TH LEVEL	■
32	M271	PIPING PLAN - 7TH LEVEL	■
33	M281	PIPING PLAN - ROOF	■
34	M301	ENLARGED MER PLANS - 1ST LEVEL	■
35	M302	ENLARGED MER PLANS - LEVELS 2-7	■
36	M303	ENLARGED MER PLANS - PENTHOUSE	■
37	M311	MECHANICAL SECTIONS	■
38	M312	MECHANICAL SECTIONS	■
39	M313	MECHANICAL SECTIONS	■
40	M401	AIR FLOW DIAGRAM	■
41	M402	CHILLED WATER FLOW DIAGRAM	■
42	M403	CHILLED BEAM WATER FLOW DIAGRAM	■
43	M404	HEATING HOT WATER FLOW DIAGRAM	■
44	M501	MECHANICAL DETAILS	■
45	M502	MECHANICAL DETAILS	■
46	M503	MECHANICAL DETAILS	■
47	M504	MECHANICAL DETAILS	■
48	M601	NETWORK ARCHITECTURE DIAGRAM	■
49	M611	CHILLED WATER CONTROL DIAGRAM (PLC SYSTEM)	■
50	M612	CHILLED WATER CONTROL DIAGRAM (BAS)	■
51	M613	HEATING HOT WATER CONTROL DIAGRAM	■
52	M614	CHILLED BEAM WATER CONTROL DIAGRAM	■
53	M621	AHU - MIXED AIR UNIT WITH COOLING COIL CONTROL DIAGRAM	■
54	M622	AHU - MIXED AIR UNIT WITH COOLING COIL CONTROL DIAGRAM	■
55	M623	AHU - KITCHEN MIXED AIR UNIT WITH COOLING COIL CONTROL DIAGRAM	■
56	M624	ENERGY RECOVERY SYSTEM CONTROL DIAGRAM	■
57	M625	FAN COIL UNIT CONTROL DIAGRAM	■
58	M631	CHILLED BEAM CONTROL DIAGRAM	■
59	M632	AIR TERMINAL UNIT CONTROL DIAGRAM	■
60	M633	KITCHEN AIR TERMINAL UNIT CONTROL DIAGRAM	■
61	M641	MISC. EQUIPMENT MONITORING	■
62	M642	MISC. EQUIPMENT MONITORING	■

DRAWING INDEX

VOL. 3

PLUMBING			
63	P001	PLUMBING SYMBOLS AND ABBREVIATIONS	■
64	P101	PLUMBING SITE PLAN	■
65	P111	PLUMBING PLAN - UNDERFLOOR AREA 1	■
66	P112	PLUMBING PLAN - UNDERFLOOR AREA 2 & 3	■
67	P211	PLUMBING PLAN - 1ST LEVEL AREA 1	■
68	P212	PLUMBING PLAN - 1ST LEVEL AREA 2 & 3	■
69	P221	PLUMBING PLAN - 2ND LEVEL AREA 1	■
70	P222	PLUMBING PLAN - 2ND LEVEL AREA 2 & 3	■
71	P231	PLUMBING PLAN - 3RD LEVEL	■
72	P241	PLUMBING PLAN - 4TH LEVEL	■
73	P251	PLUMBING PLAN - 5TH LEVEL	■
74	P261	PLUMBING PLAN - 6TH LEVEL	■
75	P271	PLUMBING PLAN - 7TH LEVEL	■
76	P281	PLUMBING PLAN - ROOF	■
77	P291	PLUMBING PLAN - HIGH ROOF	■
78	P301	PLUMBING ENLARGED TOILET ROOM PLANS	■
79	P302	PLUMBING ENLARGED TOILET ROOM PLANS	■
80	P303	PLUMBING ENLARGED TOILET ROOM PLANS	■
81	P304	PLUMBING ENLARGED KITCHEN PLAN - WASTE & VENT	■
82	P305	PLUMBING ENLARGED KITCHEN PLAN - DOMESTIC WATER & GAS	■
83	P401	PLUMBING DOMESTIC WATER RISER DIAGRAM	■
84	P402	PLUMBING CLEAR WATER WASTE RISER DIAGRAM	■
85	P403	PLUMBING SANITARY WASTE RISER DIAGRAM	■
86	P404	PLUMBING SECTION RISERS	■
87	P501	PLUMBING DETAILS	■
88	P502	PLUMBING DETAILS	■
89	P503	PLUMBING DETAILS	■
90	P601	PLUMBING FIXTURE SCHEDULE	■
91	P602	PLUMBING SCHEDULES	■
FIRE PROTECTION			
92	FP001	FIRE PROTECTION SYMBOLS AND ABBREVIATIONS	■
93	FP111	FIRE PROTECTION PLAN - 1ST LEVEL AREA 1	■
94	FP112	FIRE PROTECTION PLAN - 1ST LEVEL AREA 2 & 3	■
95	FP121	FIRE PROTECTION PLAN - 2ND LEVEL AREA 1	■
96	FP131	FIRE PROTECTION PLAN - 3RD LEVEL	■
97	FP141	FIRE PROTECTION PLAN - 4TH LEVEL	■
98	FP151	FIRE PROTECTION PLAN - 5TH LEVEL	■
99	FP161	FIRE PROTECTION PLAN - 6TH LEVEL	■
100	FP171	FIRE PROTECTION PLAN - 7TH LEVEL	■
101	FP181	FIRE PROTECTION PLAN - ROOF	■
102	FP301	FIRE PROTECTION ENLARGED PLAN AND SECTIONS	■
103	FP401	FIRE PROTECTION RISER SCHEMATIC	■
104	FP501	FIRE PROTECTION DETAILS	■

OWNER
National Aeronautics and Space Administration

ARCHITECT
HUNTONBRADY ARCHITECTS, P.A.
800 North Magnolia Ave., Suite 600
Orlando, Florida 32803
407.839.0886
License AAC001744

STRUCTURAL
Walter P. Moore and Associates, Inc.
300 S. Orange Avenue, Suite 875
Orlando, Florida 32801
407.418.2218

MECHANICAL, ELECTRICAL, PLUMBING, FIRE, TELECOM.
Affiliated Engineers SE, Inc.
3007 SW Williston Road
Gainesville, Florida 32608
352.376.5500

CIVIL
Jones Edmunds & Associates
3910 S. Washington Ave., Suite 210
Titusville, FL 32780
321.269.2950

LANDSCAPE
Herbert Halback, Inc.
135 West Central Blvd., Suite 450
Orlando, Florida 32801
407.422.1449

FOOD SERVICE CONSULTANT
Food Service Design Associates
PO BOX 809
Norwich, VT 05055
802.649.0212

LEED CONSULTANT
exp U.S. Services Inc.
2601 Westhall Lane
Maitland, FL 32751
407.660.0088

SYM	ZONE		DATE	APPROVED

REVISIONS

Hunton Brady ARCHITECTS
HuntonBrady Architects P.A.
800 North Magnolia Avenue
Suite 600
Orlando, Florida 32803

SIGNATURES	DATE
DRAWN	
Bryce Denker	12.18.13
CHECKED	
Robert Davidescu	12.18.13
SUBMITTED: ARCHITECT OF RECORD	
Drew Kreciol	12.18.13
ST of LICENSURE: FL	
LICENSE NO: AAC001744	
APPROVED	
Steve Bellflower	12.18.13
Thomas Wilczek	12-19-13

NATIONAL AERONAUTICS AND SPACE ADMINISTRATION
JOHN F. KENNEDY SPACE CENTER, NASA
KENNEDY SPACE CENTER, FLORIDA

KSC CENTRAL CAMPUS
REPLACEMENT HEADQUARTERS BUILDING
PHASE 1
VOL. 1 OF 4

DRAWING INDEX VOL. 3

FILE NO.	SIZE	DWG. NO.	
C-12070.00	F	79K39622 VOL 1	
PCN. NO. 98745.1a		SHEET 4	

G003

KSC FORM 1-11 (3/76)(C/G 3/94)

NOTICE: When Government drawings, specifications, or other data are used for any purpose other than in connection with a definitely related Government procurement operation, the United States Government thereby incurs no responsibility nor obligation whatsoever; and the fact that the Government may have formulated, furnished, or in any way supplied the said drawings, specifications or other data is not to be regarded by implication or otherwise as in any manner licensing the holder or any other person or corporation, or conveying any rights or permission to manufacture, use, or sell any patented invention that may in any way be related thereto.

DRAWING INDEX

VOL. 4

GENERAL			
1	G400	COVER SHEET VOL. 4	■
2	G401	DRAWING INDEX VOL. 1	■
3	G402	DRAWING INDEX VOL. 2	■
4	G403	DRAWING INDEX VOL. 3	■
5	G404	DRAWING INDEX VOL. 4	■
ELECTRICAL			
6	E001	ELECTRICAL SYMBOLS & ABBREVIATIONS	■
7	E011	ELECTRICAL LUMINAIRE SCHEDULE	■
8	E012	ELECTRICAL LUMINAIRE SCHEDULE	■
9	E021	EQUIPMENT CONNECTION SCHEDULE	■
10	E022	EQUIPMENT CONNECTION SCHEDULE	■
11	E023	VARIABLE FREQUENCY DRIVE SCHEDULE	■
12	E031	FOOD SERVICE & PRINTING EQUIP. CONNECTION SCHEDULES	■
13	E101	ELECTRICAL SITE PLAN	■
14	E102	ELECTRICAL SITE LIGHTING PLAN	■
15	E103	ELECTRICAL SITE GROUNDING PLAN	■
16	E104	ELECTRICAL SERVICE YARD PLAN	■
17	E105	ELECTRICAL SERVICE YARD LIGHTING PLAN	■
18	E110	POWER PLAN - 1ST LEVEL OVERALL	■
19	E111	POWER PLAN - 1ST LEVEL AREA 1	■
20	E112	POWER PLAN - 1ST LEVEL AREA 2 & 3	■
21	E121	POWER PLAN - 2ND LEVEL AREA 1	■
22	E122	POWER PLAN - 2ND LEVEL AREA 2 & 3	■
23	E131	POWER PLAN - 3RD LEVEL	■
24	E141	POWER PLAN - 4TH LEVEL	■
25	E151	POWER PLAN - 5TH LEVEL	■
26	E161	POWER PLAN - 6TH LEVEL	■
27	E171	POWER PLAN - 7TH LEVEL	■
28	E181	POWER PLAN - ROOF	■
29	E191	LIGHTNING PROTECTION PLAN - ROOF	■
30	E211	LIGHTING PLAN - 1ST LEVEL AREA 1	■
31	E211C	LIGHTING CONTROLS PLAN – 1ST LEVEL AREA 1	■
32	E212	LIGHTING PLAN - 1ST LEVEL AREA 2 & 3	■
33	E212C	LIGHTING CONTROLS PLAN – 1ST LEVEL AREA 2 & 3	■
34	E221	LIGHTING PLAN - 2ND LEVEL AREA 1	■
35	E221C	LIGHTING CONTROLS PLAN – 2ND LEVEL AREA 1	■
36	E231	LIGHTING PLAN - 3RD LEVEL	■
37	E231C	LIGHTING CONTROLS PLAN – 3RD LEVEL	■
38	E241	LIGHTING PLAN - 4TH LEVEL	■
39	E241C	LIGHTING CONTROLS PLAN – 4TH LEVEL	■
40	E251	LIGHTING PLAN - 5TH LEVEL	■
41	E251C	LIGHTING CONTROLS PLAN – 5TH LEVEL	■
42	E261	LIGHTING PLAN - 6TH LEVEL	■
43	E261C	LIGHTING CONTROLS PLAN – 6TH LEVEL	■
44	E271	LIGHTING PLAN - 7TH LEVEL	■
45	E271C	LIGHTING CONTROLS PLAN – 7TH LEVEL	■
46	E281	LIGHTING PLAN - PENTHOUSE	■
47	E281C	LIGHTING CONTROLS PLAN – PENTHOUSE	■
48	E301	ENLARGED KITCHEN POWER PLAN - 1ST LEVEL	■
49	E302	ENLARGED ELECTRICAL ROOM PLANS - 1ST TO 4TH LEVELS	■
50	E303	ENLARGED ELECTRICAL ROOM PLANS - 5TH LEVEL TO PENTHOUSE	■
51	E304	ELECTRICAL SWITCHBOARD ELEVATIONS	■
52	E401	ELECTRICAL DETAILS	■
53	E402	ELECTRICAL DETAILS	■
54	E403	ELECTRICAL DETAILS - KCCS MONITORING NETWORK DIAGRAM	■
55	E404	STAIR TOWER LIGHTING SECTIONS	■
56	E405	LIGHTING DETAILS	■
57	E406	LIGHTING CONTROL DETAILS	■
58	E407	FOOD SERVICE ELECTRICAL DETAILS	■
59	E501	MEDIUM-VOLTAGE RISER DIAGRAM	■
60	E502	NORMAL POWER RISER DIAGRAM	■
61	E503	EMERGENCY POWER RISER DIAGRAM	■
62	E601	GROUNDING RISER DIAGRAM	■
63	E602	GROUNDING DETAILS	■
64	E603	LIGHTNING PROTECTION DETAILS	■
65	E701	NORMAL POWER PANEL SCHEDULES	■
66	E702	NORMAL POWER PANEL SCHEDULES	■
67	E703	NORMAL POWER PANEL SCHEDULES	■
68	E704	NORMAL POWER PANEL SCHEDULES	■
69	E705	NORMAL POWER PANEL SCHEDULES	■
70	E706	NORMAL POWER PANEL SCHEDULES	■
71	E707	NORMAL POWER PANEL SCHEDULES	■
72	E708	NORMAL POWER PANEL SCHEDULES	■
73	E709	NORMAL POWER PANEL SCHEDULES	■
74	E711	EMERGENCY/STANDBY/UPS POWER PANEL SCHEDULES	■
75	E712	EMERGENCY/STANDBY/UPS POWER PANEL SCHEDULES	■
76	E713	EMERGENCY/STANDBY/UPS POWER PANEL SCHEDULES	■
77	E714	EMERGENCY/STANDBY/UPS POWER PANEL SCHEDULES	■
78	E715	EMERGENCY/STANDBY/UPS POWER PANEL SCHEDULES	■
FIRE ALARM			
79	FA001	FIRE ALARM SYMBOLS AND ABBREVIATIONS	■
80	FA110	FIRE ALARM PLAN - 1ST LEVEL OVERALL	■
81	FA111	FIRE ALARM PLAN - 1ST LEVEL AREA 1	■
82	FA112	FIRE ALARM PLAN - 1ST LEVEL AREA 2 & 3	■
83	FA121	FIRE ALARM PLAN - 2ND LEVEL AREA 1	■
84	FA131	FIRE ALARM PLAN - 3RD LEVEL	■
85	FA141	FIRE ALARM PLAN - 4TH LEVEL	■
86	FA151	FIRE ALARM PLAN - 5TH LEVEL	■
87	FA161	FIRE ALARM PLAN - 6TH LEVEL	■
88	FA171	FIRE ALARM PLAN - 7TH LEVEL	■
89	FA181	FIRE ALARM PLAN - ROOF	■
90	FA501	FIRE ALARM RISER DIAGRAM LEVELS 1 & 2	■
91	FA502	FIRE ALARM RISER DIAGRAM LEVELS 3 & 4	■
92	FA503	FIRE ALARM RISER DIAGRAM LEVELS 5 & 6	■
93	FA504	FIRE ALARM RISER DIAGRAM LEVELS 7 & PENTHOUSE	■
94	FA510	FIRE ALARM SMOKE CONTROL DIAGRAM	■
95	FA601	FIRE ALARM MATRICES	■
96	FA602	FIRE ALARM DETAILS	■
97	FA603	FIRE ALARM DETAILS	■
98	FA604	FIRE ALARM DETAILS	■

DRAWING INDEX

VOL. 4

TECHNOLOGY			
99	T001	TECHNOLOGY LEGEND, NOTES, AND ABBREVIATIONS	■
100	T111	TECHNOLOGY PLAN - 1ST LEVEL AREA 1	■
101	T112	TECHNOLOGY PLAN - 1ST LEVEL AREAS 2 & 3	■
102	T121	TECHNOLOGY PLAN - 2ND LEVEL	■
103	T131	TECHNOLOGY PLAN - 3RD LEVEL	■
104	T141	TECHNOLOGY PLAN - 4TH LEVEL	■
105	T151	TECHNOLOGY PLAN - 5TH LEVEL	■
106	T161	TECHNOLOGY PLAN - 6TH LEVEL	■
107	T171	TECHNOLOGY PLAN - 7TH LEVEL	■
108	T181	TECHNOLOGY PLAN - ROOF LEVEL	■
109	T211	ABOVE CEILING FLOOR PLAN - 1ST LEVEL AREA 1	■
110	T212	ABOVE CEILING FLOOR PLAN - 1ST LEVEL AREAS 2 & 3	■
111	T221	ABOVE CEILING FLOOR PLAN - 2ND LEVEL	■
112	T231	ABOVE CEILING FLOOR PLAN - 3RD LEVEL	■
113	T241	ABOVE CEILING FLOOR PLAN - 4TH LEVEL	■
114	T251	ABOVE CEILING FLOOR PLAN - 5TH LEVEL	■
115	T261	ABOVE CEILING FLOOR PLAN - 6TH LEVEL	■
116	T271	ABOVE CEILING FLOOR PLAN - 7TH LEVEL	■
117	T311	PAGING & AREA WARNING SYSTEM (PAWS) PLAN - 1ST LEVEL AREA 1	■
118	T312	PAGING & AREA WARNING SYSTEM (PAWS) PLAN - 1ST LEVEL AREAS 2 & 3	■
119	T321	PAGING & AREA WARNING SYSTEM (PAWS) PLAN - 2ND LEVEL	■
120	T331	PAGING & AREA WARNING SYSTEM (PAWS) PLAN - 3RD LEVEL	■
121	T341	PAGING & AREA WARNING SYSTEM (PAWS) PLAN - 4TH LEVEL	■
122	T351	PAGING & AREA WARNING SYSTEM (PAWS) PLAN - 5TH LEVEL	■
123	T361	PAGING & AREA WARNING SYSTEM (PAWS) PLAN - 6TH LEVEL	■
124	T371	PAGING & AREA WARNING SYSTEM (PAWS) PLAN - 7TH LEVEL	■
125	T381	PAGING & AREA WARNING SYSTEM (PAWS) PLAN - ROOF LEVEL	■
126	T501	TYPICAL OUTSIDE PLANT DETAILS	■
127	T502	TECHNOLOGY TYPICAL DETAILS	■
128	T503	TECHNOLOGY TYPICAL DETAILS	■
129	T504	AUDIO/VISUAL TYPICAL DETAILS	■
130	T505	AUDIO/VISUAL TYPICAL DETAILS	■
131	T506	AUDIO/VISUAL TYPICAL DETAILS	■
132	T601	VOICE AND DATA SYSTEM SINGLE LINE DIAGRAM	■
133	T602	PAWS AND TV SYSTEM SINGLE LINE DIAGRAMS	■
134	T701	TELCOM ENLARGED PLANS	■
135	T801	IDF.1B - ENLARGED CABINET ELEVATIONS	■
136	T802	IDF - ENLARGED CABINET ELEVATIONS	■
AUDIO/VISUAL - VENDOR			
137	AV101	AUDIO / VISUAL CONFERENCE ROOM - 1238	■
138	AV102	AUDIO / VISUAL CONFERENCE ROOM - 2009	■
139	AV103	AUDIO / VISUAL CONFERENCE ROOM - 2009	■
140	AV104	AUDIO / VISUAL CONFERENCE ROOMS - 2025, 3025, 4025, 5025, 6025, 7025	■
141	AV105	AUDIO / VISUAL CONFERENCE ROOM - 2040	■
142	AV106	AUDIO / VISUAL CONFERENCE ROOM - 3007A, 4007A, 5007A, 6007A	■
143	AV107	AUDIO / VISUAL CONFERENCE ROOMS - 3009, 4009, 5009, 6009	■
144	AV108	AUDIO / VISUAL CONFERENCE ROOMS - 3436, 3438, 4436, 4438	■
145	AV109	AUDIO / VISUAL CONFERENCE ROOM - 6440	■
146	AV110	AUDIO / VISUAL CONFERENCE ROOM - 7007	■
147	AV111	AUDIO / VISUAL CONFERENCE ROOM - 7206A	■
148	AV112	AUDIO / VISUAL CONFERENCE ROOM - 7212	■
149	AV113	AUDIO / VISUAL CONFERENCE ROOM - 7212	■
FOOD SERVICE			
150	FS100	FOOD SERVICE EQUIPMENT SCHEDULE	■
151	FS101	FOOD SERVICE EQUIPMENT PLAN	■
152	FS102	FOOD SERVICE ELECTRICAL PLAN	■
153	FS103	FOOD SERVICE PLUMBING PLAN	■
154	FS104	FOOD SERVICE MECHANICAL PLAN	■
155	FS105	FOOD SERVICE MECHANICAL DETAILS	■
156	FS106	FOOD SERVICE MECHANICAL DETAILS	■
157	FS107	FOOD SERVICE MECHANICAL DETAILS	■
158	FS108	FOOD SERVICE MECHANICAL DETAILS	■
SIGNAGE			
159	W001	SIGNAGE COVER SHEET	■
160	W101	SIGNAGE SITE PLAN	■
161	W111	SIGNAGE LOCATION FLOOR PLAN - 1ST LEVEL AREA 1	■
162	W112	SIGNAGE LOCATION FLOOR PLAN - 1ST LEVEL AREA 2	■
163	W113	SIGNAGE LOCATION FLOOR PLAN - 1ST LEVEL AREA 3	■
164	W121	SIGNAGE LOCATION FLOOR PLAN - 2ND LEVEL AREA 1	■
165	W131	SIGNAGE LOCATION FLOOR PLAN - 3RD LEVEL AREA 1	■
166	W141	SIGNAGE LOCATION FLOOR PLAN - 4TH LEVEL AREA 1	■
167	W151	SIGNAGE LOCATION FLOOR PLAN - 5TH LEVEL AREA 1	■
168	W161	SIGNAGE LOCATION FLOOR PLAN - 6TH LEVEL AREA 1	■
169	W171	SIGNAGE LOCATION FLOOR PLAN - 7TH LEVEL AREA 1	■
170	W181	SIGNAGE LOCATION ROOF PLAN	■
171	W204	EXTERIOR BUILDING MOUNTED SIGNAGE	■
172	W301	SIGNAGE DETAILS	■
173	W302	SIGNAGE DETAILS	■
174	W303	SIGNAGE DETAILS	■
175	W304	SIGNAGE DETAILS	■
176	W305	SIGNAGE DETAILS	■
177	W306	SIGNAGE DETAILS	■
178	W307	SIGNAGE DETAILS	■

OWNER
National Aeronautics and Space Administration

ARCHITECT
HUNTONBRADY ARCHITECTS, P.A.
800 North Magnolia Ave., Suite 600
Orlando, Florida 32803
407.839.0886
License AAC001744

STRUCTURAL
Walter P. Moore and Associates, Inc.
300 S. Orange Avenue, Suite 875
Orlando, Florida 32801
407.418.2218

MECHANICAL, ELECTRICAL, PLUMBING, FIRE, TELECOM.
Affiliated Engineers SE, Inc.
3007 SW Williston Road
Gainesville, Florida 32608
352.376.5500

CIVIL
Jones Edmunds & Associates
3910 S. Washington Ave., Suite 210
Titusville, FL 32780
321.269.2950

LANDSCAPE
Herbert Halback, Inc.
135 West Central Blvd., Suite 450
Orlando, Florida 32801
407.422.1449

FOOD SERVICE CONSULTANT
Food Service Design Associates
PO BOX 809
Norwich, VT 05055
802.649.0212

LEED CONSULTANT
exp U.S. Services Inc.
2601 Westhall Lane
Maitland, FL 32751
407.660.0088

SYM	ZONE	REVISIONS	DATE	APPROVED

HuntonBrady Architects P.A.
800 North Magnolia Avenue
Suite 600
Orlando, Florida 32803

SIGNATURES	DATE
DRAWN Bryce Denker	12.18.13
CHECKED Robert Davidescu	12.18.13
SUBMITTED: ARCH/ENG OF RECORD Drew Krecicki	12·18·13
ST of LICENSURE: FL LICENSE NO: AAC001744	
APPROVED Steve Belflower	12·18·13
Thomas Wilczek	12-19-13

NATIONAL AERONAUTICS AND SPACE ADMINISTRATION
JOHN F. KENNEDY SPACE CENTER, NASA
KENNEDY SPACE CENTER, FLORIDA

KSC CENTRAL CAMPUS
REPLACEMENT HEADQUARTERS BUILDING
PHASE 1
VOL. 1 OF 4

DRAWING INDEX VOL. 4

FILE NO.	SIZE	DWG. NO.
C-12070.00	F	79K39622 VOL 1

PCN. NO. 98745.1a SHEET 5

G004

KSC FORM 1-11 (3/76)(C/G 3/94)

NOTICE: When Government drawings, specifications, or other data are used for any purpose other than in connection with a definitely related Government procurement operation, the United States Government thereby incurs no responsibility nor obligation whatsoever; and the fact that the Government may have formulated, furnished, or in any way supplied the said drawings, specifications or other data is not to be regarded by implication or otherwise as in any manner licensing the holder or any other person or corporation, or conveying any rights or permission to manufacture, use, or sell any patented invention that may in any way be related thereto.

Applicable Codes

The following codes will be enforced:

1) Florida Building Code 2010 (effective March 2011)
   a) Building (including Energy, Accessibility, Elevator & State Agency Regulations)
   b) Plumbing
   c) Mechanical
   d) Fuel Gas
   e) Electrical (NEC)
2) NFPA 101 - Life Safety Code - 2012 edition (abbreviated LSC)

Occupancy Classification

1) First Floor - Mixed Use: Business, Group B and Assembly, Group A.
2) Second thru Sixth Floors: Business, Group B.
3) Seventh Floor: Business, Group B, with accessory use (conference room)

FBC 2010 requirements
FBC 303.1: exceptions - Assembly occupancies of less than 50 people or less than 750 sf can be classified as business occupancy.

General Building Heights and Area

Table 503 Allowable Heights and Building Areas:
1) Type of Construction: 1B
2) Height: 160 ft +20 ft (sprinkler system modification 504.2)
3) Number of Stories: 11 +1 (sprinkler system modification 504.2)
4) Area per Floor: Unlimited

Actual Design:
1) Height - 15ft per floor, except the first floor shall be 20ft.
   Height to finish floor of highest occupied floor: 95 ft.
   Height to top of tower: 135 ft.
2) No. Stories - 7 Stories.

Type of Construction

Fire Resistance Rated Construction (FBC Table 601):
1) Structural frame supporting more than one floor or one roof: 2-hour
2) Structural frame supporting only 1 floor or one roof: 1-hour
3) Bearing walls supporting more than 1 floor or one roof: 3-hour
4) Interior Bearing walls supporting a 1 floor or one roof: 2-hour
5) Non-bearing walls and partitions: 0-hour
   Non-bearing exterior walls: (see Table 602)
6) Floor construction: 2-hour
7) Roof Construction: 1-hour
8) Shaft Enclosures, 4 or more stories: 2-hour
   Connecting less than 4 stories: 1-hour
9) Egress Corridors - NFPA 101 Paragraph 38.3.6.1:
   1 hour corridor requirement is not required for single tenant buildings and in fully sprinklered buildings (business occupancy). The requirements for egress path for assembly occupancies (i.e.: panic hardware) are required along the egress path including the stairwells.

FBC 2010 Concrete Equivalent Thickness:
a) Table 721.2.1.1 requires a minimum equivalent concrete wall thickness of 3.5 inches for a 1-hour rating and 5.0 inches for a 2-hour rating -
b) Table 721.3.2 requires a CMU minimum equivalent thickness of 3 inches for a 1-hour rating
c) Table 721.2.2.1 requires a minimum equivalent slab thickness of 3.5 inches for a 1-hour rating
d) Table 721.2.4 requires a minimum concrete column thickness of 8 inches for a 1-hour rating

Interior Finishes

1) Table 803.9 and LSC 12.3.3.2 Interior Wall and Ceiling Finishes for Group B, Sprinklered
   a) Vertical Exits and Exit Passageways: Class A or B
   b) Rooms and Enclosed Spaces: Class A, B or C
2) Interior Floor Finish
   a) Vertical Exits and Exit Passageways: Class II

Egress Requirements

1) Table 1004.1.1 and LSC 7.3.1.2 - Maximum Floor Area Allowance Per Occupant:
   a. 100 gross (Business) 200 gross (Kitchen Prep)
   b. 15 net (Less-concentrated Assembly) 300 gross (Mail/ Shipping Area)
2) Table 1005.1 and LSC 7.3.3.1 Egress Width Per Occupant Served:
   a. Stairways (Inches Per Occupant) 0.3"
   b. Other Egress Components (Inches Per Occupant) 0.2"
3) Section 1008.1 and LSC 7.2.1.2.3.2 - Minimum Clear Door Width: 32"
4) Section 1009.1 and LSC table 7.2.2.2.1.2(B) - Minimum Stair Width: 44" when serving 50 or more
5) Minimum of 56 inches in width when the total cumulative occupant load assigned to the stair is greater than or equal to 2000 persons. (LSC table 7.2.2.2.1.2(B))
6) Maximum riser height of 7 inches. (LSC table 7.2.2.2.1.1 (A)/ FBC 1009.4)
7) Minimum riser height of 4 inches. (LSC table 7.2.2.2.1.1 (A)/ FBC 1009.4)
8) Minimum tread depth of 11 inches. (LSC table 7.2.2.2.1.1 (A)/ FBC 1009.4)
9) Minimum headroom: 6 feet 8 inches. (LSC table 7.2.2.2.1.1 (A)/ FBC 1009.2)
10) Maximum vertical riser between landings is 12 feet (LSC table 7.2.2.2.1.1 (a)/ FBC 1009.7)
11) Stairs are not permitted to decrease in width along the direction of egress travel (LSC 7.2.2.3.2.2)
12) The radius of curvature at the leading edge of the tread shall not be greater than 9/16 inches. (FBC 1009.4.5)
13) Stairways located in a required fire resistant enclosure shall have closed risers. All other stairways shall be permitted to have open risers. (LSC 7.2.2.3.1.3)
14) Section 1014.3 Common Path of Egress Travel:
   a. Group B, Sprinklered: 100'
   b. Group A: 75' when serving less than 50 and 20' where path serves > 50
15) Section 1015.2.1 Where a building is equipped throughout with an automatic sprinkler system, the separation distance of the exit doors shall not be less than one-third of the length of the maximum overall diagonal dimension of the area served.
16) Section 1016.1 and LSC 12.2.2S.2.(1) and 38.2.6.3 Exit Access Travel Distance:
   a. Group B, with sprinklers: 300 ft.
   b. Group A: 250 ft.
17) Table 1018.1 Corridor Fire-Resistance Rating (Group A and B, with sprinklers): 0 hours
18) Section 1018.2 Minimum Corridor Width (Group B, with sprinklers): 44 In.
19) Section 1018.4 Maximum Dead End Corridor
   a. Group B, with sprinklers: 50 ft.
   b. Group A: 20 ft.
20) Table 1021.1 Minimum Number of Exits: 1-500 occupants: 2 exits
21) Section 1022.1 Exit Enclosures Fire-resistance Rating
   a. Connecting 4 or more stories: 2-Hour
   b. Connecting Less than 4 stories: 1-Hour
22) Floor identification signs shall be provided in accordance with FBC 1022.8 A sign shall be provided at each floor landing in exit enclosures connecting more than (3) stories designating the floor level, the terminus of the top and bottom of the exit enclosure and the identification of the stair or ramp. The signage shall also state the story of, and the direction to, the exit discharge and the availability of roof access from the enclosure for the fire department. The sign shall be located 5 feet above the floor landing in a position that is readily visible when the doors are in the open and closed positions. Floor level identification signs in tactile characters complying with ICC A117.1 shall be located at each floor level landing adjacent to the door leading from the enclosure into the corridor to identify the floor level.
23) Approved luminous egress path markings delineating the exit path shall be provided in accordance with Sections FBC 1024.1 through 1024.5. Luminous egress path markings shall not be required on the level of exit discharge in lobbies that serve as part of the exit path in accordance with Section 1027.1, Exception 1.

Shaft Enclosure Construction

1. Shaft enclosures shall have a fire-resistance rating of not less than 2 hours where connecting four stories or more. The number of stories connected by the shaft enclosure shall include any basements but not any mezzanines. Shaft enclosures shall be constructed as fire barriers in accordance with section 706. Shaft enclosures shall have a fire-resistance rating not less than the floor assembly penetrated, but need not exceed 2 hours. (FBC 708.4)
2. Shaft enclosure walls shall extend from the top of the floor/ceiling assembly below to the underside of the floor or roof slab or deck above and shall be securely attached thereto. These walls shall be continuous through concealed spaces such as the space above a suspended ceiling. The supporting construction shall be protected to afford the required fire-resistance rating of the element supported. Hollow vertical spaces within the shaft enclosure construction wall shall be firestopped at every floor level. (FBC 707.5)
3. Where exterior walls serve as a part of a required shaft enclosure, such walls shall comply with the requirements of section 705 for exterior walls and the fire-resistance-rated enclosure requirements shall not apply. (FBC 708.6)
4. Penetrations in a shaft enclosure shall be protected in accordance with section 713 as required for fire barriers. (FBC 708.8)
5. Penetrations of a shaft enclosure by ducts and air transfer openings shall comply with section 716. (FBC 708.10)

Exit Doors

1) Minimum 32 inches clear width (LSC 7.2.1.2.3.2)
2) Any door in means of egress shall be of the side hinged or pivoted-swinging type, and shall be installed to be capable of swinging from any position to the full required width of the opening in which it is installed. (LSC 7.2.1.4.1, FBC 1008.1.2)
3) Swing in the direction of egress when serving 50 or more occupants or high hazard occupancy or, in exit enclosure. (LSC 7.2.1.4.2, FBC 1008.1.2)
4) During swing leave not less than ½ of the required width of an aisle, a corridor, a passageway, or a landing unobstructed and shall not project more than 7 in. into required width when fully open. (LSC 7.2.1.4.3)
5) Force to open, applied at the latch stile. (LSC 7.2.1.4.5/ FBC 1008.1.3)
   a) Less than or equal to 15 lbf to operate the latch
   b) Less than or equal to 30 lbf to set the door in motion.
   c) Less than or equal to 15 lbf to fully open door to minimum required width.
   d) Less than or equal to 5 lbf for interior side-hinged or pivoted swinging doors without closers.
6) Floor level at doors (LSC 7.2.1.3, FBC 1008.1.5): the elevation of the floor surfaces on both sides of a door shall not vary by more than ½ inch. The elevation shall be maintained on both sides of the doorway for a distance not less than the width of the widest leaf. Thresholds at doorways shall not exceed ½ inch in height. Raised thresholds and floor level changes in excess of ¼ in. At doorways shall be beveled with a slope not steeper than 1 in 2.
7) Where doors are required to be self-closing and are operated by power upon the approach of a person, or are provided with power-assisted manual operation, they shall be permitted in the means of egress under the following conditions: (LSC 7.2.1.9.2, FBC 1008.1.4.2)
   a) Doors can be opened manually in accordance with LSC 7.2.1.9.1 to allow egress travel in the event of power failure.
   b) New doors remain in the closed position unless actuated or opened manually.
   c) When actuated, new doors remain open for not more than 30 seconds.
   d) Doors held open for any period of time close- and the power-assist mechanism ceases to function- upon operation of approved smoke detectors installed in such a way as to detect smoke on either side of the door opening in accordance with the provisions of NFPA 72.
   e) Doors required to be self-latching are either self-latching or become self-latching upon operation of approved smoke detectors per LSC 7.2.1.9.2(4).
   f) New power-assisted swinging doors comply with BHMA/ANSI A156.19, American National Standard for power assist and low energy power operated doors.
   g) On the egress side of each door, there shall be a readily visible, durable sign that reads: "in emergency push to open". The sign shall be in letters not less than 1 inch high on a contrasting background.
8) A door normally required to be kept closed shall not be secured in the open position at any time and shall be self-closing or automatic closing in accordance with LSC 7.2.1.8.2. (LSC 7.2.1.8.1)
9) Any door in a required means of egress from an area having an occupant load of 100 or more persons shall be permitted to be provided with a latch or lock only if the latch or lock is panic hardware or fire exit hardware complying with LSC 7.2.1.7. (LSC 12.2.2.2.3)
10) Where a door is required to be equipped with panic or fire exit hardware, such hardware shall meet the following criteria: (LSC 7.2.1.7.1)
   a) It shall consist of a cross bar or push pad, the actuating portion of which extends across not less than one-half of the width of the door leaf.
   b) It shall be constructed so that a horizontal force not to exceed 15 lbf actuates the cross bar or push pad and latches.
   c) It shall be mounted not less than 34 inches nor more than 48 inches above the floor.
11) Required panic hardware and fire exit hardware shall not be equipped with any locking device, set screw, or other arrangement that prevents the release of the latch when pressure is applied to the releasing device. (LSC 7.2.1.7.3)
12) Devices that hold the latch in the retracted position shall be prohibited on fire exit hardware unless listed and approved for that purpose. (LSC 7.2.1.7.4)
13) The clearance under the bottom of swinging doors with fire door hardware shall be as follows: (NFPA 80, Table 1-11.4)
   a) Clearance between bottom of door and raised noncombustible sills: 3/8-inch.
   b) Clearance between bottom of door and floor where no sill exists: 3/4-inch.
   c) Clearance between bottom of door and floor coverings: 1/2-inch.
14) Fire door assemblies in vertical exit enclosures and exit passageways shall have a maximum transmitted temperature end point of not more than 450°F above ambient at the end of 30 minutes of standard fire test exposure. (FBC 715.4.4) exception: the maximum transmitted temperature end point is not required in buildings equipped throughout with an approved automatic sprinkler system. (FBC 715.4.4)

Mixed Use Occupancy

1) FBC Chapter 508: Mixed Use and occupancy: Buildings housing more than one occupancy shall comply with:
   a. 508.2: Accessory Occupancies to main occupancy shall not exceed 10% of main occupancy on each story. Shall also not exceed limitations of table 503.
   b. 508.2.4: Separation of Occupancies: No separation of occupancies is required between accessory occupancies and the main occupancy in fully sprinklered buildings.
   c. NFPA 101 Paragraph 6.1.14.1(b): 1 hour occupancy separation is required between business and assembly use (this does not include the exit path).
   d. Table 508.2.5 Table lists incidental accessory occupancies requiring a fire rating.
   e. LSC 6.1.14.3 Mixed Occupancies. Mixed Occupancies. Each portion of the building shall be classified as to its use in accordance with LSC Section 6.1. The building shall comply with the most restrictive requirements of the occupancies involved, unless separate safeguards are approved.

Special Area Separation

Hazardous areas, including but not limited to, areas used for storage, boiler, furnace and maintenance shops (LSC 38.3.2)
1-hr or sprinklers

Hazardous areas, having high-hazard contents (LSC 38.3.2)
1-hr and automatic extinguishing system

Electrical vaults containing conductors and equipment over 600 V(NFPA 70 110)
1-hr

Transformer rooms housing dry-type transformers over 112½ kVA (NFPA 70 450.21)
1-hr (see Note 1)

Emergency generator room (NFPA 110)
2-hr

Fire pump room (FBC table 508.2.5)
2-hr

Fire command center (FBC 911.1.2)
1-hr

Note 1: Individual dry-type transformers of more than 112.5 kVA rating shall be installed in a transformer room of fire-resistant construction. Unless specified otherwise in this article, the term fire resistant means a construction having a minimum rating of 1 hour. Exception #1, transformers with class 155 or higher insulation systems and separated from combustible material by a fire-resistant, heat insulating barrier or by not less than 6 ft. Horizontally and 12 ft. Vertically. Exception #2, transformers with class 155 or higher insulation systems and completely enclosed except for ventilating openings. Additional fire ratings may be required than those currently shown to comply with NFPA 70.

Fire Rated Assemblies:

1) Fire-Stopping

UL System No. HW-D-0044	Rated wall to	concrete slab (1 and 2-hour)
UL System No. HW-D-0194	Rated shaft wall to	concrete slab (2-hour)
UL System No. HW-D-0039	Concrete wall or CMU, perpendicular to	composite deck (1-hour)
UL System No. HW-D-0055	Concrete wall or CMU, parallel to	composite deck (1-hour)
UL System No. HW-D-0043	Rated wall, perpendicular to	composite deck (1 and 2-hour)
UL System No. HW-D-0054	Rated wall, parallel to	composite deck (1 and 2-hour)
UL System No. HW-D-0088	Rated wall, perpendicular to	spray-applied deck (1 and 2-hour)
UL System No. HW-D-0099	Rated wall, parallel to	spray-applied deck (1 and 2-hour)
UL System No. HW-D-0548	Rated shaft wall, perpendicular to	spray-applied deck (2-hour)
UL System No. HW-D-0643	Rated shaft wall, parallel to	spray-applied deck (2-hour)
UL System No. HW-D-0139	Concrete wall, perpendicular to	spray-applied deck (2-hour)
UL System No. HW-D-0140	Concrete wall, parallel to	spray-applied deck (2-hour)
UL System No. CW-D-2042	Curtain wall glazing system to	concrete slab (2-hour)
UL System No. CW-D-2004	Precast wall to	concrete slab (2-hour)
UL System No. WW-D-1037	Precast wall to	c.i.p. column (2-hour)

2) Fire-Proofing

UL Design No. Y710	Steel column tube/pipe, spray-applied (1-hour)
UL Design No. Y715	Steel column wide flange, spray-applied (1-hour)
UL Design No. P732	Roof deck and beams, insulation on metal deck, spray-applied (1-hour)
UL Design No. D925	Roof deck, concrete on metal deck, 3 1/2" concrete thickness (1-hour)
UL Design No. D925 or N782	Roof beams, composite deck with insulation, spray applied (1 1/2-hour)

3) Fire-Partitions

UL Design No. U465	Rated partition (1-hour)
UL Design No. U411	Rated partition (2-hour)
UL Design No. U415	Shaft wall (1 and 2-hour)
UL Design No. U438	Shaft wall (2-hour)
UL Class Materials	Concrete wall (2-hour)
UL Class Materials	CMU wall (1-hour)
PEI No. AER-09038	Horizontal shaft wall (2-hour)

PROJECT OPTIONS

ARCHITECTURAL

A-1 NOT USED
A-2 NOT USED
A-3 NOT USED
A-4 NOT USED.
A-5 REMOVE THE U-SHAPED PRECAST PANEL AND PRECAST CAP THAT CLADS THE SOUTH ELEVATION CONCRETE BEAMS TO SUPPORT THE SOUTH EXTERIOR ENVELOPE. THESE EXPOSED CONCRETE STRUCTRUAL MEMBERS WILL BE EXTENDED UP TO MATCH THE PREVIOUS PRECAST PROFILE THAT RECEIVES THE GLAZING.
A-6 PROVIDE ADDITIONAL FOOD SERVICE EQUIPMENT AS OUTLINED IN SECTION 11 40 00.

CIVIL/LANDSCAPING

C-1 ADD ADDITIONAL LANDSCAPING
C-2 ADD PHASE 2 PARKING IN NE QUADRANT

MECHANICAL

M-1 ADD HEAT EXCHANGER, CAMPUS CHILLED WATER PUMP, BUILDING CHILLED WATER PUMP, AND APPURTENANCES. THIS OPTION INCLUDES ALL PIPING CONNECTIONS, VARIABLE FREQUENCY DRIVES, INSTRUMENTATION, CONTROL PORGRAMMING, AND ELECTRICAL POWER DISTRIBUTION ASSOCIATED WITH EACH PIECE OF EQUIPMENT.
M-2 NOT USED

ELECTRICAL

E-1 UPGRADE THE 800-kW EMERGENCY GENERATOR ENVIRONMENTAL RATING FROM TIER 2 TO TIER 4. PROVIDE DESIGN/BUILD SERVICES TO REVISE THE EMERGENCY GENERATOR ENVIRONMENTAL RATING FROM EPA TIER 2 REQUIREMENTS TO EPA TIER 4 REQUIREMENTS. INCLUDE ALL MANUFACTURER EQUIPMENT CHANGES, AND PROVIDE/INSTALL ALL RELATED EQUIPMENT.

LEED

L-1 NOT USED
L-2 NOT USED
L-3 ADD SEVEN DUAL-STATION ELECTRIC VEHICLE CHARGERS IN PARKING AREA AS INDICATED ON SHEET E101.
L-4 PROVIDE LED LIGHT FIXTURES INSTEAD OF FLUORESCENT AND COMPACT FLUORESCENT LIGHT FIXTURES AS INDICATED ON SHEET E011.

GENERAL NOTE:

1. EXIT SIGNS DEPICT EXITING STRATEGY ON ALL LEVELS, AND DO NOT DEPICT ALL EXIT SIGNS REQUIRED ON THIS PROJECT

2. GENERAL NOTES CONTAINED ON THE G-DRAWINGS ARE APPLICABLE TO THE ENTIRE DRAWING SET. GENERAL NOTES CONTAINED ON EACH DISCIPLINE DRAWING ARE ONLY APPLICABLE TO THAT DISCIPLINE.

SYM	ZONE		DATE	APPROVED

REVISIONS

Hunton Brady ARCHITECTS
HuntonBrady Architects P.A.
800 North Magnolia Avenue
Suite 600
Orlando, Florida 32803

SIGNATURES	DATE
DRAWN Bryce Denker	12.18.13
CHECKED Robert Davidescu	12.18.13
SUBMITTED: ARCHITECT OF RECORD Drew Kraczek	12-18-13
ST of LICENSURE: FL	
LICENSE NO: AAC001744	
APPROVED Steve Bellflower	12-18-13
Thomas Wilczek	12-19-13

NATIONAL AERONAUTICS AND SPACE ADMINISTRATION
JOHN F. KENNEDY SPACE CENTER, NASA
KENNEDY SPACE CENTER, FLORIDA

KSC CENTRAL CAMPUS
REPLACEMENT HEADQUARTERS BUILDING
PHASE 1
VOL. 1 OF 4

PROJECT DATA

FILE NO.	SIZE	DWG. NO.
C-12070.00	F	79K39622 VOL 1

PCN. NO. 98745.1a SHEET 6

G011

NOTICE: When Government drawings, specifications, or other data are used for any purpose other than in connection with a definitely related Government procurement operation, the United States Government thereby incurs no responsibility nor obligation whatsoever; and the fact that the Government may have formulated, furnished, or in any way supplied the said drawings, specifications or other data is not to be regarded by implication or otherwise as in any manner licensing the holder or any other person or corporation, or conveying any rights or permission to manufacture, use, or sell any patented invention that may in any way be related thereto.

GENERAL NOTE:

1. EXIT SIGNS DEPICT EXITING STRATEGY ON ALL LEVELS, AND DO NOT DEPICT ALL EXIT SIGNS REQUIRED ON THIS PROJECT

2. GENERAL NOTES CONTAINED ON THE G-DRAWINGS ARE APPLICABLE TO THE ENTIRE DRAWING SET. GENERAL NOTES CONTAINED ON EACH DISCIPLINE DRAWING ARE ONLY APPLICABLE TO THAT DISCIPLINE.

OCCUPANCY LEGEND

- ASSEMBLY
- BUSINESS
- KITCHEN
- MAIL/PRINTING

PARTITION RATING LEGEND	
1 HR. FIRE	
2 HR. FIRE	
2 HR. FIRE/SMOKE BARRIER	
SMOKE-RESISTANT	

LIFE SAFETY LEGEND	
⊗	EMERGENCY EXIT SIGN
68"	EGRESS WIDTH (INCHES)
FEC	FIRE EXTINGUISHER CABINET
FE	FIRE EXTINGUISHER

OCCUPANCY CLASSIFICATION:

SEE G011 FOR CODE SUMMARY AND ASSUMPTIONS.

OCCUPANT LOAD CALCULATION NFPA (GROSS FLOOR AREA SUMMARY)

1ST LEVEL	30,351 SF	Business (100/1 person)
	5,842 SF	Assembly (15/1 person)
	5,197 SF	Kitchen Prep (200/1 person)
	6,462 SF	Mail/Printing Area (300/1 person)
2ND LEVEL	17,943 SF	Business (100/1 person)
	1,490 SF	Assembly (15/1 person)
3RD LEVEL	21,268 SF	Business (100/1 person)
	3,171 SF	Assembly (15/ 1 person)
4TH LEVEL	21,850 SF	Business (100/1 person)
	2,589 SF	Assembly (15/ 1 person)
5TH LEVEL	22,898 SF	Business (100/1 person)
	1,541 SF	Assembly (15/ 1 person)
6TH LEVEL	22,600 SF	Business (100/1 person)
	1,839 SF	Assembly (15/ 1 person)
7TH LEVEL	20,762 SF	Business (100/1 person)
	3,677 SF	Assembly (15/1 person)
TOTAL GROSS AREA	189,480 SF	

1ST LEVEL	742 PERSONS
2ND LEVEL	279 PERSONS
3RD LEVEL	425 PERSONS
4TH LEVEL	392 PERSONS
5TH LEVEL	332 PERSONS
6TH LEVEL	349 PERSONS
7TH LEVEL	454 PERSONS
TOTAL	2,973 PERSONS

EGRESS CAPACITY REQUIRED:

1ST LEVEL	742 Persons X 0.2 = 148.4" Horizontal Egress Provided = 746.0"
2ND LEVEL	279 Persons X 0.2 = 55.8" Horizontal Egress Provided = 108.0" 279 Persons X 0.3 = 83.7" Vertical Egress Provided = 151.5"
3RD LEVEL	425 Persons X 0.2 = 85.0" Horizontal Egress Provided = 108.0" 427 Persons X 0.3 = 127.5" Vertical Egress Provided = 151.5"
4TH LEVEL	392 Persons X 0.2 = 78.4" Horizontal Egress Provided = 108.0" 392 Persons X 0.3 = 117.6" Vertical Egress Provided = 151.5"
5TH LEVEL	332 Persons X 0.2 = 66.4" Horizontal Egress Provided = 108.0" 332 Persons X 0.3 = 99.6" Vertical Egress Provided = 151.5"
6TH LEVEL	349 Persons X 0.2 = 69.8" Horizontal Egress Provided = 108.0" 349 Persons X 0.3 = 104.7" Vertical Egress Provided = 151.5"
7TH LEVEL	454 Persons X 0.2 = 90.8" Horizontal Egress Provided = 114.0" 454 Persons X 0.3 = 136.2" Vertical Egress Provided = 151.5"

1ST LEVEL

CAPACITY: 742 persons
REQUIRED: 742 x 0.2 = 148.4"
PROVIDED: 746"

2 HR. FIRE RATED HORIZONTAL CONCRETE DECK REQUIRED. SEE REFLECTED CEILING PLAN FOR DETAILS.

EGRESS PATH DESIGNATION MAINTAIN A CLEAR PATH OF TRAVEL FREE OF EQUIPMENT AND FURNITURE. SEE FLOOR PATTERN PLAN.

TRAVEL DISTANCE = 128'-0"

TRAVEL DISTANCE = 142'-0"

TRAVEL DISTANCE = 148'-4"

TRAVEL DISTANCE = 91'-6"

135'-0"

354'-1" MAX DIAGONAL DISTANCE

CAFETERIA SEATING 1400B 374 PERSONS

LIFE SAFETY PLAN - 1ST LEVEL

3/32" = 1'-0"

GRAPHIC SCALE 0 16 32

SCALE IN FEET 3/32" = 1'-0"

G110

SYM	ZONE		DATE	APPROVED

REVISIONS

HuntonBrady Architects P.A.
600 North Magnolia Avenue
Suite 600
Orlando, Florida 32803

SIGNATURES	DATE
DRAWN	
Bryce Denker	12.18.13
CHECKED	
Robert Davidescu	12.18.13
SUBMITTED: ARCHITECT OF RECORD	
Drew Kreutzer	12/18/13
ST of LICENSURE: FL	
LICENSE NO: AAC001744	
APPROVED	
Steve Bellows	12-18-13
Thomas Wiczek	12-19-13

NATIONAL AERONAUTICS AND SPACE ADMINISTRATION
JOHN F. KENNEDY SPACE CENTER, NASA
KENNEDY SPACE CENTER, FLORIDA

KSC CENTRAL CAMPUS
REPLACEMENT HEADQUARTERS BUILDING
PHASE 1
VOL. 1 OF 4

LIFE SAFETY PLAN - 1ST LEVEL

FILE NO.	SIZE	DWG. NO.
C-12070.00	F	79K39622 VOL 1

PCN. NO. 98745.1a SHEET 7

NOTICE: When Government drawings, specifications, or other data are used for any purpose other than in connection with a definitely related Government procurement operation, the United States Government thereby incurs no responsibility nor obligation whatsoever; and the fact that the Government may have formulated, furnished, or in any way supplied the said drawings, specifications or other data is not to be regarded by implication or otherwise as in any manner licensing the holder or any other person or corporation, or conveying any rights or permission to manufacture, use, or sell any patented invention that may in any way be related thereto.

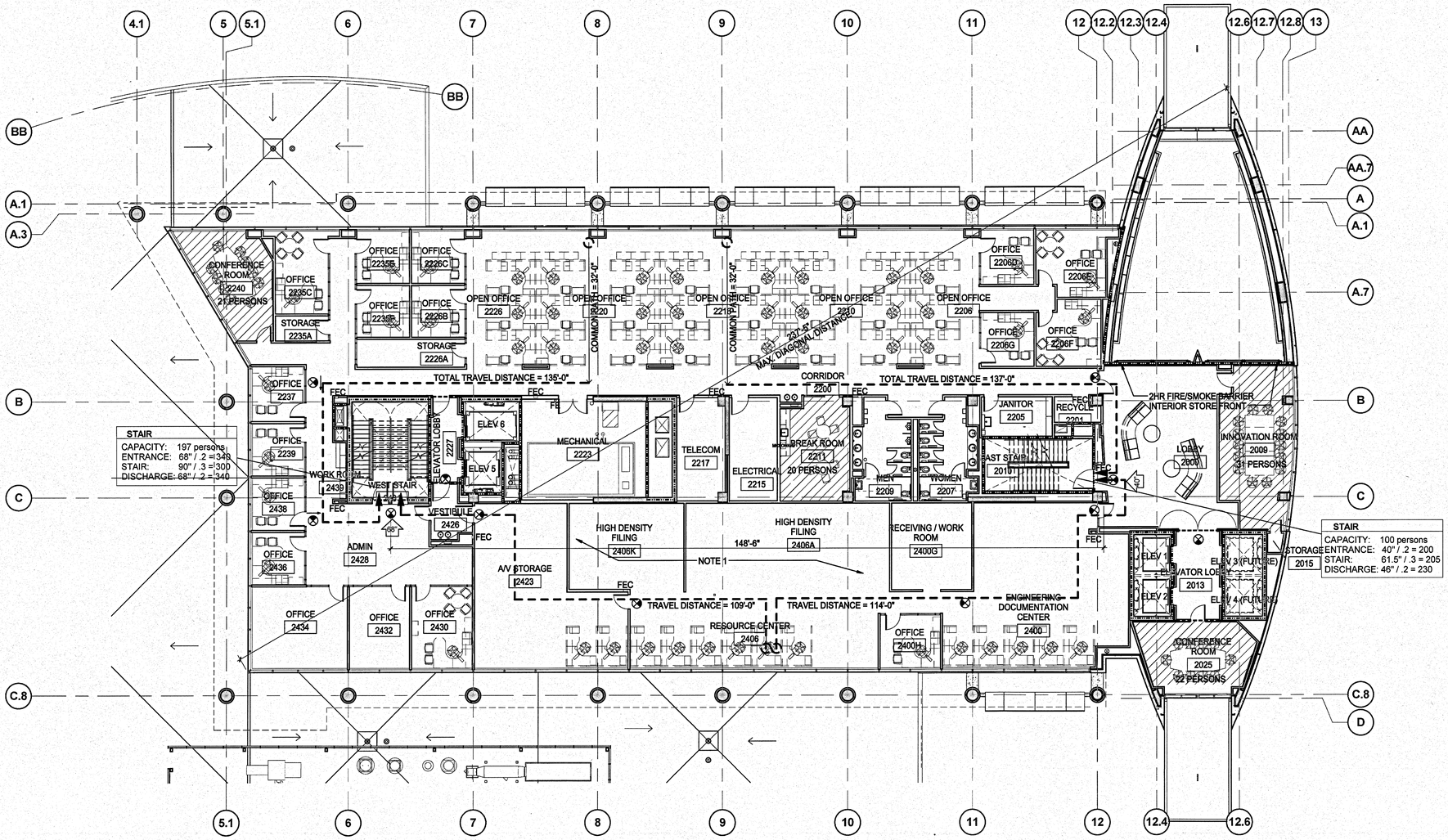

LIFE SAFETY PLAN - 2ND LEVEL

3/32" = 1'-0"

LIFE SAFETY LEGEND	
⊗	EMERGENCY EXIT SIGN
68"	EGRESS WIDTH (INCHES)
FEC	FIRE EXTINGUISHER CABINET
FE	FIRE EXTINGUISHER

PARTITION RATING LEGEND	
	1 HR. FIRE
	2 HR. FIRE
	2 HR. FIRE/SMOKE BARRIER
	SMOKE-RESISTANT

GENERAL NOTE:

1. EXIT SIGNS DEPICT EXITING STRATEGY ON ALL LEVELS, AND DO NOT DEPICT ALL EXIT SIGNS REQUIRED ON THIS PROJECT

2. GENERAL NOTES CONTAINED ON THE G-DRAWINGS ARE APPLICABLE TO THE ENTIRE DRAWING SET. GENERAL NOTES CONTAINED ON EACH DISCIPLINE DRAWING ARE ONLY APPLICABLE TO THAT DISCIPLINE.

NOTES:

NOTE 1 - FIRE SPRINKLERS AT HIGH DENSITY FILES TO BE SPACED IN A 6"x 6" PATTERN, PER AHJ REQUIREMENTS.

OCCUPANCY LEGEND

- ASSEMBLY
- BUSINESS

GRAPHIC SCALE

0 16 32

SCALE IN FEET
3/32" = 1'-0"

-N-

G120

SYM	ZONE		DATE	APPROVED

REVISIONS

Hunton Brady ARCHITECTS
HuntonBrady Architects P.A.
800 North Magnolia Avenue
Suite 900
Orlando, Florida 32803

SIGNATURES	DATE
DRAWN Bryce Denker	12.18.13
CHECKED Robert Davidescu	12.18.13
SUBMITTED: ARCHITECT OF RECORD Drew Pascoe	12.18.13
ST of LICENSURE: FL LICENSE NO: AAC001744	
APPROVED Steve Bellflower	12.18.13
Thomas Vincent	12.19.13

NATIONAL AERONAUTICS AND SPACE ADMINISTRATION
JOHN F. KENNEDY SPACE CENTER, NASA
KENNEDY SPACE CENTER, FLORIDA

KSC CENTRAL CAMPUS
REPLACEMENT HEADQUARTERS BUILDING
PHASE 1
VOL. 1 OF 4

LIFE SAFETY PLAN - 2ND LEVEL

FILE NO.	SIZE	DWG. NO.
C-12070.00	F	79K39622 VOL 1

PCN. NO. 98745.1a SHEET 8

KSC FORM 1-11 (3/76)(C/G 3/94)

NOTICE: When Government drawings, specifications, or other data are used for any purpose other than in connection with a definitely related Government procurement operation, the United States Government thereby incurs no responsibility nor obligation whatsoever; and the fact that the Government may have formulated, furnished, or in any way supplied the said drawings, specifications or other data is not to be regarded by implication or otherwise as in any manner licensing the holder or any other person or corporation, or conveying any rights or permission to manufacture, use, or sell any patented invention that may in any way be related thereto.

LIFE SAFETY LEGEND	
⊗	EMERGENCY EXIT SIGN
68"	EGRESS WIDTH (INCHES)
FEC	FIRE EXTINGUISHER CABINET
FE	FIRE EXTINGUISHER

PARTITION RATING LEGEND	
	1 HR. FIRE
	2 HR. FIRE
	2 HR. FIRE/SMOKE BARRIER
	SMOKE-RESISTANT

GENERAL NOTE:

1. EXIT SIGNS DEPICT EXITING STRATEGY ON ALL LEVELS, AND DO NOT DEPICT ALL EXIT SIGNS REQUIRED ON THIS PROJECT

2. GENERAL NOTES CONTAINED ON THE G-DRAWINGS ARE APPLICABLE TO THE ENTIRE DRAWING SET. GENERAL NOTES CONTAINED ON EACH DISCIPLINE DRAWING ARE ONLY APPLICABLE TO THAT DISCIPLINE.

OCCUPANCY LEGEND

ASSEMBLY

BUSINESS

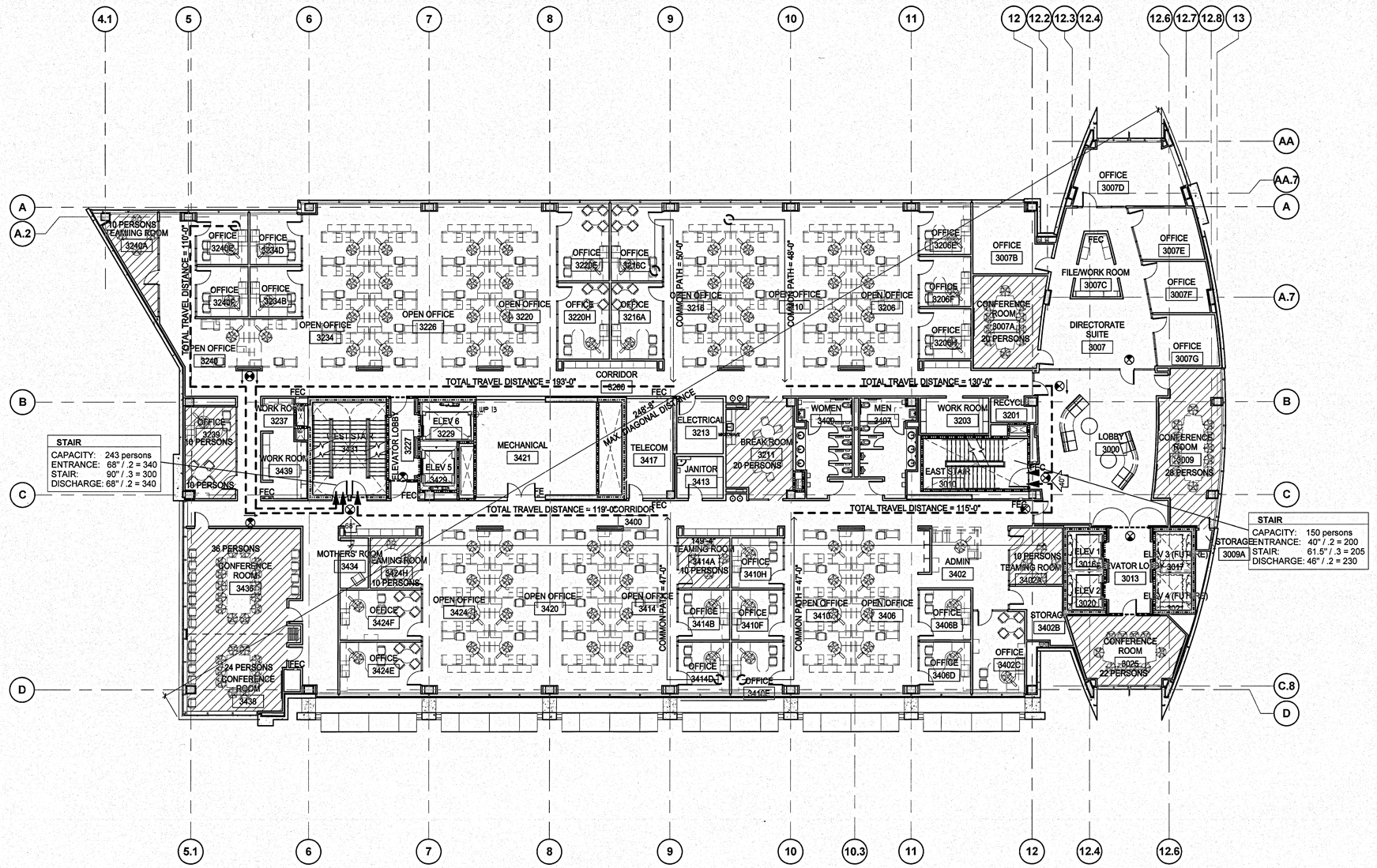

LIFE SAFETY PLAN - 3RD LEVEL

3/32" = 1'-0"

GRAPHIC SCALE

0 16 32

SCALE IN FEET
3/32" = 1'-0"

G130

SYM	ZONE		DATE	APPROVED

REVISIONS

Hunton Brady ARCHITECTS
HuntonBrady Architects P.A.
600 North Magnolia Avenue
Suite 600
Orlando, Florida 32803

SIGNATURES	DATE
DRAWN	
Bryce Denker	12.18.13
CHECKED	
Robert Davidescu	12.18.13
SUBMITTED: ARCHITECT OF RECORD	
John Robison	12.18.13
ST of LICENSURE: FL	
LICENSE NO: AAC001744	
APPROVED	
Steve Belflower	12.18.13
Thomas Wilcox	12.19.13

NATIONAL AERONAUTICS AND SPACE ADMINISTRATION
JOHN F. KENNEDY SPACE CENTER, NASA
KENNEDY SPACE CENTER, FLORIDA

KSC CENTRAL CAMPUS
REPLACEMENT HEADQUARTERS BUILDING
PHASE 1
VOL. 1 OF 4

LIFE SAFETY PLAN - 3RD LEVEL

FILE NO.	SIZE	DWG. NO.
C-12070.00	F	79K39622 VOL 1
PCN. NO. 98745.1a		SHEET 9

NOTICE: When Government drawings, specifications, or other data are used for any purpose other than in connection with a definitely related Government procurement operation, the United States Government thereby incurs no responsibility nor obligation whatsoever; and the fact that the Government may have formulated, furnished, or in any way supplied the said drawings, specifications or other data is not to be regarded by implication or otherwise as in any manner licensing the holder or any other person or corporation, or conveying any rights or permission to manufacture, use, or sell any patented invention that may in any way be related thereto.

LIFE SAFETY LEGEND	
⊗	EMERGENCY EXIT SIGN
68"	EGRESS WIDTH (INCHES)
FEC	FIRE EXTINGUISHER CABINET
FE	FIRE EXTINGUISHER

PARTITION RATING LEGEND	
	1 HR. FIRE
	2 HR. FIRE
	2 HR. FIRE/SMOKE BARRIER
	SMOKE-RESISTANT

GENERAL NOTE:

1. EXIT SIGNS DEPICT EXITING STRATEGY ON ALL LEVELS, AND DO NOT DEPICT ALL EXIT SIGNS REQUIRED ON THIS PROJECT

2. GENERAL NOTES CONTAINED ON THE G-DRAWINGS ARE APPLICABLE TO THE ENTIRE DRAWING SET. GENERAL NOTES CONTAINED ON EACH DISCIPLINE DRAWING ARE ONLY APPLICABLE TO THAT DISCIPLINE.

OCCUPANCY LEGEND

ASSEMBLY

BUSINESS

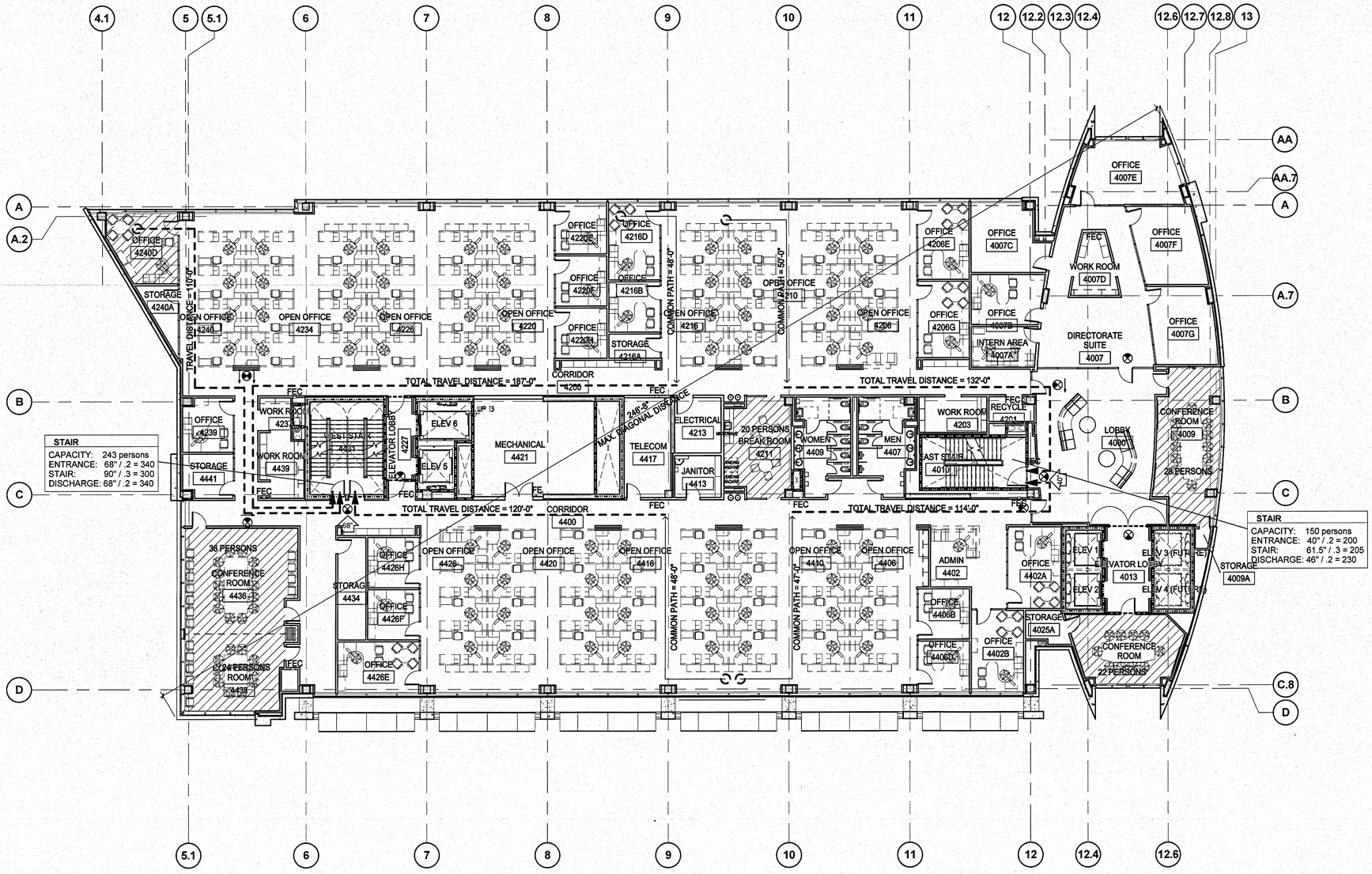

LIFE SAFETY PLAN - 4TH LEVEL

3/32" = 1'-0"

GRAPHIC SCALE

0 16 32

SCALE IN FEET
3/32" = 1'-0"

G140

SYM	ZONE		DATE	APPROVED

REVISIONS

HuntonBrady ARCHITECTS
HuntonBrady Architects P.A.
600 North Magnolia Avenue
Suite 600
Orlando, Florida 32803

SIGNATURES	DATE
DRAWN	
Bryce Denker	12.18.13
CHECKED	
Robert Davidescu	12.18.13
SUBMITTED ARCHITECT OF RECORD	
Drew Kreutzer	12/18/13
ST of LICENSURE: FL	
LICENSE NO: AAC001744	
APPROVED	
Steve Belfiglio	12.18.13
Thomas Wilczek	12-19-13

NATIONAL AERONAUTICS AND SPACE ADMINISTRATION
JOHN F. KENNEDY SPACE CENTER, NASA
KENNEDY SPACE CENTER, FLORIDA

KSC CENTRAL CAMPUS
REPLACEMENT HEADQUARTERS BUILDING
PHASE 1
VOL. 1 OF 4

LIFE SAFETY PLAN - 4TH LEVEL

FILE NO.	SIZE	DWG. NO.
C-12070.00	F	79K39622 VOL 1

PCN. NO. 98745.1a SHEET 10

NOTICE: When Government drawings, specifications, or other data are used for any purpose other than in connection with a definitely related Government procurement operation, the United States Government thereby incurs no responsibility nor obligation whatsoever; and the fact that the Government may have formulated, furnished, or in any way supplied the said drawings, specifications or other data is not to be regarded by implication or otherwise as in any manner licensing the holder or any other person or corporation, or conveying any rights or permission to manufacture, use, or sell any patented invention that may in any way be related thereto.

LIFE SAFETY LEGEND	
⊗	EMERGENCY EXIT SIGN
68"	EGRESS WIDTH (INCHES)
FEC	FIRE EXTINGUISHER CABINET
FE	FIRE EXTINGUISHER

PARTITION RATING LEGEND	
	1 HR. FIRE
	2 HR. FIRE
	2 HR. FIRE/SMOKE BARRIER
	SMOKE-RESISTANT

GENERAL NOTE:

1. EXIT SIGNS DEPICT EXITING STRATEGY ON ALL LEVELS, AND DO NOT DEPICT ALL EXIT SIGNS REQUIRED ON THIS PROJECT

2. GENERAL NOTES CONTAINED ON THE G-DRAWINGS ARE APPLICABLE TO THE ENTIRE DRAWING SET. GENERAL NOTES CONTAINED ON EACH DISCIPLINE DRAWING ARE ONLY APPLICABLE TO THAT DISCIPLINE.

OCCUPANCY LEGEND

ASSEMBLY

BUSINESS

STAIR
CAPACITY: 243 persons
ENTRANCE: 68" / .2 = 340
STAIR: 90" / .3 = 300
DISCHARGE: 68" / .2 = 340

STAIR
CAPACITY: 150 persons
ENTRANCE: 40" / .2 = 200
STAIR: 61.5" / .3 = 205
DISCHARGE: 46" / .2 = 230

TRAVEL PATH = 98'-0"
TOTAL TRAVEL DISTANCE = 191'-0"
TOTAL TRAVEL DISTANCE = 129'-0"
TOTAL TRAVEL DISTANCE = 122'-0"
TOTAL TRAVEL DISTANCE = 114'-0"
COMMON PATH = 48'-0"
COMMON PATH = 47'-0"
MAX DIAGONAL DISTANCE 248'-9"

OPEN OFFICE 5240 · OPEN OFFICE 5234 · OPEN OFFICE 5226 · OPEN OFFICE 5220 · OPEN OFFICE 5216 · OPEN OFFICE 5210 · OPEN OFFICE 5206
OFFICE 5220E · OFFICE 5216D · OFFICE 5216B · OFFICE 5220F · OFFICE 5216A · STORAGE 5220H
OFFICE 5206E · OFFICE 5206F · STORAGE 5206H · OFFICE 5007B · OFFICE 5007D · OFFICE 5007E · OFFICE 5007F
FEC FILE/WORK ROOM 5007C · CONFERENCE ROOM 5007A 20 PERSONS · DIRECTORATE SUITE 5007 · STORAGE 5007G
CORRIDOR 5200 · CORRIDOR 5400
WORK ROOM 5237 · WORK ROOM 5437 · OPEN OFFICE 5239 · OPEN OFFICE 5439 · EST STA 5421 · ELEVATOR LOBBY 5227 · ELEV 6 · ELEV 5 · UP 13
MECHANICAL 5421 · TELECOM 5417 · JANITOR 5413 · ELECTRICAL 5213 · 20 PERSONS BREAK ROOM 5211
WOMEN 5409 · MEN 5407 · WORK ROOM 5203 · FEC RECYCLE 5201 · AST STAIR 5013 · LOBBY 5000 · CONFERENCE ROOM 5009 28 PERSONS
SHELL SPACE 5440 · STORAGE 5434 · OFFICE 5426H · OFFICE 5426F · OFFICE 5426E
OPEN OFFICE 5428 · OPEN OFFICE 5420 · TEAMING ROOM 5420A 10 PERSONS · OFFICE 5420B · OFFICE 5420D
OFFICE 5416H · OFFICE 5416F · OFFICE 5416E · OPEN OFFICE 5418 · OPEN OFFICE 5414 · OPEN OFFICE 5406
ADMIN 5402 · OFFICE 5402A · OFFICE 5402B · STORAGE 5025A · CONFERENCE ROOM 22 PERSONS
ELEV 1 · ELEV 2 · ELEV 3 (FUTURE) · ELEV 4 (FUTURE) · ELEVATOR LOBBY 5013 · STORAGE 5009A

LIFE SAFETY PLAN - 5TH LEVEL
3/32" = 1'-0"

GRAPHIC SCALE
0 16 32
SCALE IN FEET
3/32" = 1'-0"

G150

SYM	ZONE		DATE	APPROVED
		REVISIONS		

HuntonBrady ARCHITECTS
HuntonBrady Architects P.A.
800 North Magnolia Avenue
Suite 600
Orlando, Florida 32803

SIGNATURES	DATE
DRAWN	
Bryce Denker	12.18.13
CHECKED	
Robert Davidescu	12.18.13
SUBMITTED: ARCHITECT OF RECORD	
Drew Knecht	12.18.13
ST of LICENSURE: FL	
LICENSE NO: AAC001744	
APPROVED	
Steve Bertolino	12-18-13
Thomas Wilczek	12-19-13

NATIONAL AERONAUTICS AND SPACE ADMINISTRATION
JOHN F. KENNEDY SPACE CENTER, NASA
KENNEDY SPACE CENTER, FLORIDA

KSC CENTRAL CAMPUS
REPLACEMENT HEADQUARTERS BUILDING
PHASE 1
VOL. 1 OF 4

LIFE SAFETY PLAN - 5TH LEVEL

FILE NO.	SIZE	DWG. NO.
C-12070.00	F	79K39622 VOL 1
PCN. NO. 98745.1a		SHEET 11

KSC FORM 1-11 (3/76)(C/G 3/94)

NOTICE: When Government drawings, specifications, or other data are used for any purpose other than in connection with a definitely related Government procurement operation, the United States Government thereby incurs no responsibility nor obligation whatsoever; and the fact that the Government may have formulated, furnished, or in any way supplied the said drawings, specifications or other data is not to be regarded by implication or otherwise as in any manner licensing the holder or any other person or corporation, or conveying any rights or permission to manufacture, use, or sell any patented invention that may in any way be related thereto.

LIFE SAFETY LEGEND	
⊗	EMERGENCY EXIT SIGN
68"	EGRESS WIDTH (INCHES)
FEC	FIRE EXTINGUISHER CABINET
FE	FIRE EXTINGUISHER

PARTITION RATING LEGEND
1 HR. FIRE
2 HR. FIRE
2 HR. FIRE/SMOKE BARRIER
SMOKE-RESISTANT

GENERAL NOTE:

1. EXIT SIGNS DEPICT EXITING STRATEGY ON ALL LEVELS, AND DO NOT DEPICT ALL EXIT SIGNS REQUIRED ON THIS PROJECT

2. GENERAL NOTES CONTAINED ON THE G-DRAWINGS ARE APPLICABLE TO THE ENTIRE DRAWING SET. GENERAL NOTES CONTAINED ON EACH DISCIPLINE DRAWING ARE ONLY APPLICABLE TO THAT DISCIPLINE.

OCCUPANCY LEGEND

ASSEMBLY

BUSINESS

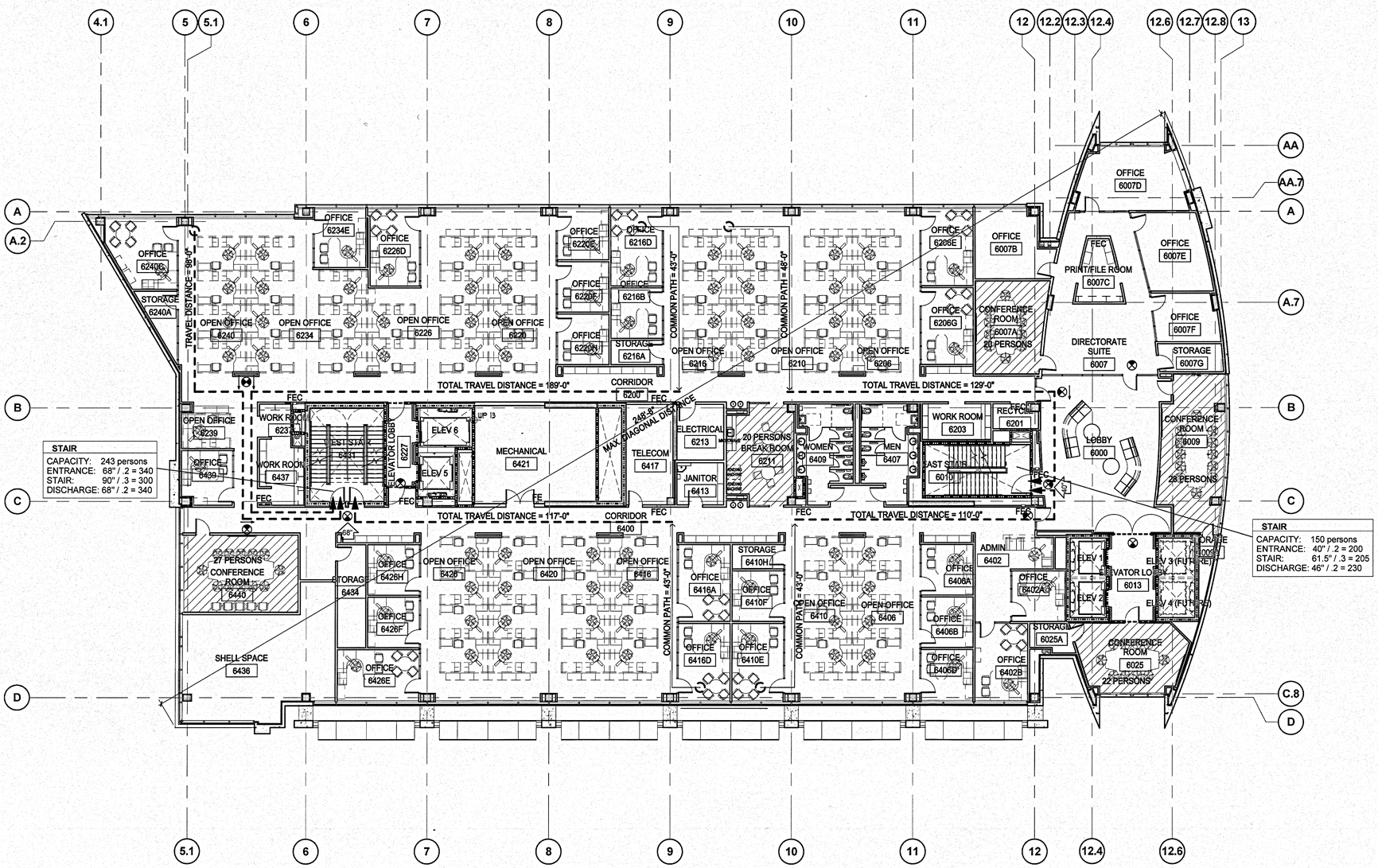

LIFE SAFETY PLAN - 6TH LEVEL

3/32" = 1'-0"

GRAPHIC SCALE

0 16 32

SCALE IN FEET
3/32" = 1'-0"

N

G160

SIGNATURES	DATE
DRAWN	
Bryce Denker	12.18.13
CHECKED	
Robert Davidescu	12.18.13
SUBMITTED: ARCHING CORRECORD	
Drew Kreock	12.18.13
ST of LICENSURE: FL	
LICENSE NO: AAC001744	
APPROVED	
Steve Bellower	12.18.13
Thomas Wilcox	12.19.13

SYM	ZONE		DATE	APPROVED

REVISIONS

Hunton Brady ARCHITECTS
HuntonBrady Architects P.A.
800 North Magnolia Avenue
Suite 600
Orlando, Florida 32803

NATIONAL AERONAUTICS AND SPACE ADMINISTRATION
JOHN F. KENNEDY SPACE CENTER, NASA
KENNEDY SPACE CENTER, FLORIDA

KSC CENTRAL CAMPUS
REPLACEMENT HEADQUARTERS BUILDING
PHASE 1
VOL. 1 OF 4

LIFE SAFETY PLAN - 6TH LEVEL

FILE NO.	SIZE	DWG. NO.
C-12070.00	F	79K39622 VOL 1
PCN. NO. 98745.1a		SHEET 12

NOTICE: When Government drawings, specifications, or other data are used for any purpose other than in connection with a definitely related Government procurement operation, the United States Government thereby incurs no responsibility nor obligation whatsoever; and the fact that the Government may have formulated, furnished, or in any way supplied the said drawings, specifications or other data is not to be regarded by implication or otherwise as in any manner licensing the holder or any other person or corporation, or conveying any rights or permission to manufacture, use, or sell any patented invention that may in any way be related thereto.

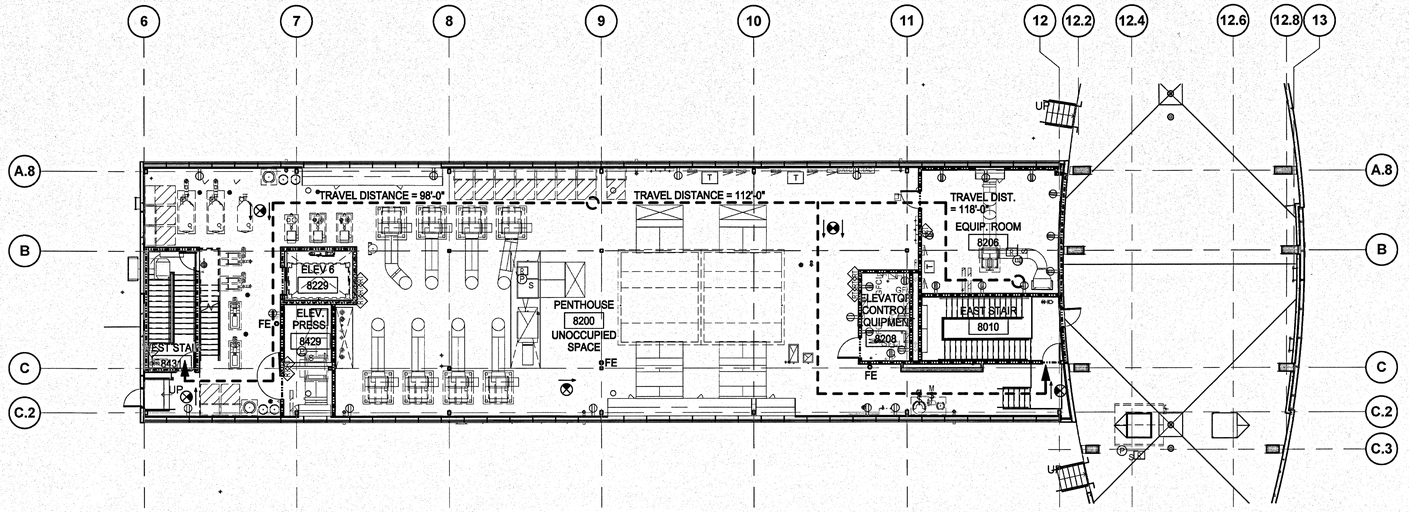

PENTHOUSE PLAN

3/32" = 1'-0"

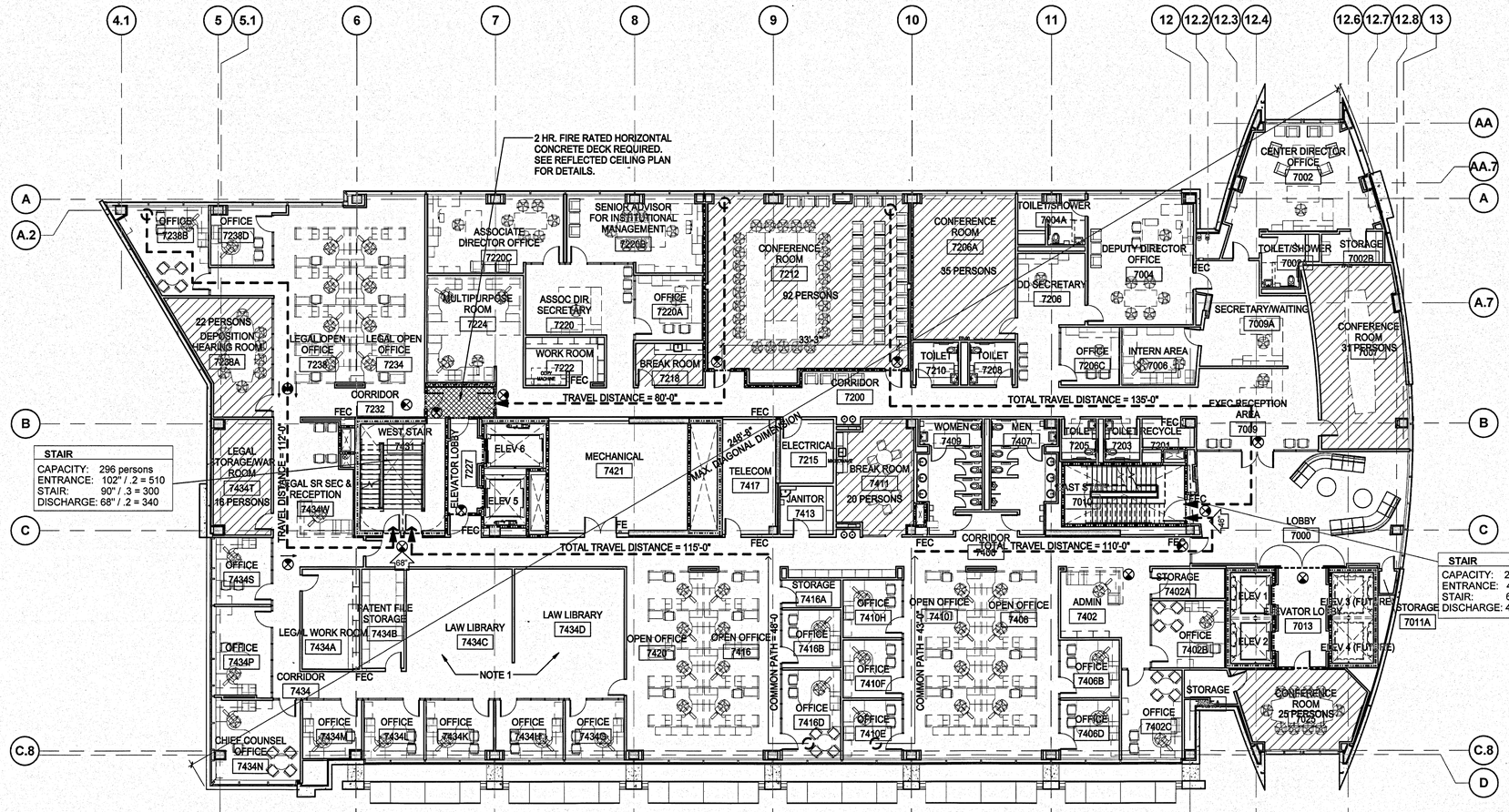

LIFE SAFETY PLAN - 7TH LEVEL

3/32" = 1'-0"

LIFE SAFETY LEGEND	
⊗	EMERGENCY EXIT SIGN
68"	EGRESS WIDTH (INCHES)
FEC	FIRE EXTINGUISHER CABINET
FE	FIRE EXTINGUISHER

PARTITION RATING LEGEND	
	1 HR. FIRE
	2 HR. FIRE
	2 HR. FIRE/SMOKE BARRIER
	SMOKE-RESISTANT

GENERAL NOTE:

1. EXIT SIGNS DEPICT EXITING STRATEGY ON ALL LEVELS, AND DO NOT DEPICT ALL EXIT SIGNS REQUIRED ON THIS PROJECT

2. GENERAL NOTES CONTAINED ON THE G-DRAWINGS ARE APPLICABLE TO THE ENTIRE DRAWING SET. GENERAL NOTES CONTAINED ON EACH DISCIPLINE DRAWING ARE ONLY APPLICABLE TO THAT DISCIPLINE.

NOTES:

NOTE 1 - FIRE SPRINKLERS AT HIGH DENSITY FILES TO BE SPACED IN A 6"x 6" PATTERN, PER AHJ REQUIREMENTS.

OCCUPANCY LEGEND

ASSEMBLY

BUSINESS

GRAPHIC SCALE

0 16 32

SCALE IN FEET
3/32" = 1'-0"

-N-

G170

SYM	ZONE		DATE	APPROVED
		REVISIONS		

HuntonBrady Architects P.A.
600 North Magnolia Avenue
Suite 600
Orlando, Florida 32803

SIGNATURES	DATE
DRAWN Bryce Denker	12.18.13
CHECKED Robert Davidescu	12.18.13
SUPPORTED ARCHITECT OF RECORD Drew Kreciolek	12.18.13
ST of LICENSURE: FL LICENSE NO: AAC001744	
APPROVED Steve Bellamy	12.18.13
Thomas Wilczek	12.19.13

NATIONAL AERONAUTICS AND SPACE ADMINISTRATION
JOHN F. KENNEDY SPACE CENTER, NASA
KENNEDY SPACE CENTER, FLORIDA

KSC CENTRAL CAMPUS
REPLACEMENT HEADQUARTERS BUILDING
PHASE 1
VOL. 1 OF 4

LIFE SAFETY PLAN - 7TH LEVEL & PENTHOUSE

FILE NO.	SIZE	DWG. NO.
C-12070.00	F	79K39622 VOL 1

PCN. NO. 98745.1a SHEET 13

KSC FORM 1-11 (3/76)(C/G 3/94)

NOTICE: When Government drawings, specifications, or other data are used for any purpose other than in connection with a definitely related Government procurement operation, the United States Government thereby incurs no responsibility nor obligation whatsoever; and the fact that the Government may have formulated, furnished, or in any way supplied the said drawings, specifications or other data is not to be regarded by implication or otherwise as in any manner licensing the holder or any other person or corporation, or conveying any rights or permission to manufacture, use, or sell any patented invention that may in any way be related thereto.

GENERAL NOTES

1. EXISTING CONDITIONS PLAN IS A COMPILATION OF SURVEYS, GIS, AND LIDAR INFORMATION. GIS INFORMATION WAS PROVIDED BY NASA JAN 15, 2010. LIDAR INFORMATION WAS PROVIDED BY PROGRAM & DATA SOLUTIONS (PDS) AND PERFORMED BETWEEN SEPT 15 AND SEPT 29, 2007. SURVEYS USED IN EXISTING CONDITIONS PLANS INCLUDE:
   - HEADQUARTERS/FIRST STREET ADA PARKING LOT (DWG 79K36438). SURVEY PERFORMED BY KUGELMANN LAND SURVEYING INC., DATED FEBRUARY 2005.
   - REPAVE O&C PARKING LOTS (DWG 79K38792). SURVEY PERFORMED BY KUGELMANN LAND SURVEYING INC., DATED MAY 2010.
   - REVITALIZE W/WW SYSTEMS PHASE 4 (DWG 79K38877). SURVEY PERFORMED BY KUGELMANN LAND SURVEYING INC., DATED JULY 2011.
   - CENTRAL CAMPUS COMPLEX SITING STUDY (PCN 98745). PERFORMED BY KUGELMANN LAND SURVEYING INC., DATED APRIL 2010.
2. ALL ELEVATIONS ARE REFERENCED TO NORTH AMERICAN VERTICAL DATUM 1988 (NAVD 88).
3. LOCATIONS, ELEVATIONS, AND DIMENSIONS OF EXISTING STRUCTURES, UTILITIES AND OTHER FEATURES SHOWN ARE BASED ON THE BEST INFORMATION AVAILABLE AT THE TIME OF PREPARATION OF THESE DRAWINGS BUT ARE NOT PURPORTED TO BE ABSOLUTELY CORRECT. THERE MAY BE OTHER IMPROVEMENTS WITHIN THE PROJECT AREA. CONTRACTOR SHALL VERIFY, PRIOR TO CONSTRUCTION, THE LOCATIONS, ELEVATIONS, AND DIMENSIONS OF ALL EXISTING STRUCTURES, AND OTHER FEATURES (WHETHER OR NOT SHOWN ON THE DRAWINGS) AFFECTING THE WORK.
4. THE CONTRACTOR SHALL NOTIFY THE CONTRACTING OFFICER IN WRITING IMMEDIATELY IF CONFLICTS OR DISCREPANCIES BETWEEN THE DRAWINGS AND ACTUAL CONDITIONS ARE DISCOVERED. THE CONTRACTOR SHALL ACCURATELY RECORD ANY SUCH CONFLICTS ON THE CONSTRUCTION DRAWINGS.
5. THE CONTRACTOR SHALL NOTIFY THE CONTRACTING OFFICER IN WRITING A MINIMUM OF 14 WORKING DAYS PRIOR TO MAKING ANY CONNECTION TO THE WATER, SEWER, COMMUNICATION, ELECTRIC, OR OTHER UTILITY SERVICE. ADDITIONALLY, THE CONTRACTOR SHALL OBTAIN WRITTEN AUTHORIZATION FROM THE CONTRACTING OFFICER A MINIMUM OF 14 WORKING DAYS PRIOR TO INTERRUPTING WATER, SEWER, COMMUNICATION, ELECTRICAL, OR OTHER UTILITY SERVICE.
6. THE CONTRACTOR SHALL PRESERVE AND MAINTAIN EXISTING UTILITIES, STRUCTURES, AND OTHER FEATURES INSIDE AND OUTSIDE THE PROJECT LIMITS. THE CONTRACTOR SHALL REPAIR OR REPLACE ALL UTILITIES, STRUCTURES AND FEATURES INCLUDING PAVING, STABILIZED EARTH, PIPING, GRASS, SOD, DITCHES, FENCES, GATES, SIGNS, TRAFFIC STRIPING, UTILITIES, BUILDINGS, FENCING, MONITORING WELLS, AND ANY OTHER EXISTING SITE FEATURES OR IMPROVEMENTS DAMAGED AS A RESULT OF THE CONTRACTOR'S ACTIVITIES WITH THE SAME TYPE OF MATERIAL THAT WAS REMOVED OR DAMAGED DURING CONSTRUCTION, OR AS DIRECTED BY THE CONTRACTING OFFICER, AT THE CONTRACTOR'S EXPENSE.
7. CONTRACTOR SHALL HAND EXCAVATE IN THE VICINITY OF ALL EXISTING UNDERGROUND UTILITIES, IN ACCORDANCE WITH REFERENCE DOCUMENT KNPR 8715-7.
8. THE CONTRACTOR SHALL FIELD VERIFY EXISTING UTILITIES, (SIZE, MATERIAL OF CONSTRUCTION, ELEVATION, ETC.) INCLUDING AT CONNECTING POINTS, PRIOR TO SHOP DRAWING PREPARATION AND SUBMITTAL.
9. REFERENCES TO FDOT SPECIFICATIONS SHALL REFER TO THE FLORIDA DEPARTMENT OF TRANSPORTATION "STANDARD SPECIFICATIONS FOR ROAD AND BRIDGE CONSTRUCTION - 2010" (RED COVER).
10. FDOT INDICES SHALL REFER TO THE "2010 FLORIDA DEPARTMENT OF TRANSPORTATION ROADWAY AND TRAFFIC DESIGN STANDARDS."
11. THE CONTRACTOR SHALL PROVIDE CONTROL AND MAINTENANCE OF TRAFFIC IN ACCORDANCE WITH FDOT INDICES 600 THROUGH 660.
12. THE CONTRACTOR SHALL PROVIDE SIGNAGE IN ACCORDANCE WITH THE MUTCD AND FDOT INDICES 9535 THROUGH 17355.
13. THE CONTRACTOR SHALL VERIFY THAT ALL REQUIRED CLEARANCES CAN BE MET, AND IF ANY CANNOT BE MET, CONTRACTOR SHALL NOTIFY THE CONTRACTING OFFICER IN WRITING 14 FULL WORKING DAYS PRIOR TO CONSTRUCTING ANY SUCH ITEM.
14. THE CONTRACTOR IS RESPONSIBLE FOR BRACING, SHORING, OR PROVIDING OTHER MEANS NECESSARY TO PROTECT AND SUPPORT EXISTING AND PROPOSED UTILITIES AND STRUCTURES EXPOSED OR UNEXPOSED DURING CONSTRUCTION.
15. THE CONTRACTOR IS SOLELY RESPONSIBLE FOR PROPER VERTICAL AND HORIZONTAL ALIGNMENT OF CONSTRUCTED FACILITIES, PIPELINES, AND FINISHED GRADES. ALL CONSTRUCTION SURVEYING, ALIGNMENT, STAKING, ETC., SHALL BE PERFORMED BY A PROFESSIONAL LAND SURVEYOR REGISTERED IN THE STATE OF FLORIDA.
16. ALL AREAS INSIDE AND OUTSIDE THE PROJECT LIMITS DISTURBED AS A RESULT OF THE CONTRACTOR'S ACTIVITIES SHALL BE RESTORED TO ORIGINAL OR DESIGN GRADE AS APPLICABLE AT THE CONTRACTOR'S EXPENSE.
17. CONTRACTOR SHALL NOT CLOSE OR OBSTRUCT STREETS, WALKS, OR OTHER ADJACENT OCCUPIED OR IN-USE FACILITIES WITHOUT PERMISSION FROM THE CONTRACTING OFFICER. IN ADDITION, THE CONTRACTOR SHALL PROVIDE ALTERNATE ROUTES AROUND CLOSED OR OBSTRUCTED TRAFFIC WAYS.
18. FACILITIES AND IMPROVEMENTS TO REMAIN SHALL BE CLEANED ON A DAILY BASIS OF DUST, DIRT, AND DEBRIS CAUSED BY CONTRACTOR'S OPERATIONS.
19. ALL SLOPES STEEPER THAN 4:1 SHALL BE SODDED, AND THE SOD SHALL BE STAKED TO PREVENT MOVEMENT.
20. GRADING BETWEEN SPOT ELEVATIONS, CONTOURS AND WHEN MATCHING EXISTING GRADES SHALL BE ON A SMOOTH STRAIGHT LINE UNLESS NOTED OTHERWISE.
21. REGRADE DITCHES AS NECESSARY TO PROVIDE POSITIVE DRAINAGE AND PREVENT LOCALIZED PONDING OR LOW SPOTS.
22. ALL PAINTED CONCRETE CAN BE TAKEN TO THE KSC LANDFILL. ALL UNPAINTED CONCRETE CAN GO TO THE DARCY.
23. DEWATERING EFFLUENT MAY BE DISCHARGED TO GRADE. DEWATERING MUST BE CONDUCTED IN ACCORDANCE WITH THE "NOTICED GENERAL PERMIT FOR SHORT TERM CONSTRUCTION DEWATERING" PERMIT #84324 ISSUED BY THE ST. JOHNS RIVER WATER MANAGEMENT DISTRICT AND CONTRACT CLAUSE "DEWATERING CONSUMPTIVE USE PERMIT." THE CONTRACTOR SHALL NOT EXCEED 300,000 GALLONS PER DAY AND SHALL NOT EXCEED 30 DAYS DURATION FOR DEWATERING ACTIVITIES. IF THE CONTRACTOR WILL EXCEED THIS, THEY SHALL OBTAIN APPROVAL FROM THE CONTRACTING OFFICER 14 DAYS PRIOR TO EXCEEDING THE LIMIT OF THE PERMIT. ALL WATER DISCHARGED TO GRADE MUST NOT ENTER SURFACE WATERS. EFFLUENT MUST BE DISCHARGED TO A PERVIOUS SURFACE TO FACILITATE INFILTRATION BACK INTO THE GROUND.
24. THE CONTRACTOR SHALL LOCATE AND PROTECT, BRACE, SHORE, OR OTHERWISE SUPPORT EXISTING THRUST BLOCKS TO MAINTAIN ADEQUATE THRUST RESTRAINT ON WATER MAINS TO REMAIN DURING CONSTRUCTION, AND REPAIR AND RESTORE ALL THRUST BLOCKS TO REMAIN. SEE DETAIL 3/C210
25. UNLESS OTHERWISE NOTED IN THE PLANS PAVEMENT MARKINGS SHALL BE PAINTED.
26. CONTRACTOR SHALL CUT AND CAP AT WORK INTERFACE AND REMOVE ALL EXISTING IRRIGATION PIPING, SPRINKLERS AND APPURTENANCES WHICH INTERFERE WITH CONSTRUCTION ACTIVITIES (SEE LANDSCAPING DRAWINGS FOR NEW IRRIGATION REQUIREMENTS).

SYM	ZONE		DATE	APPROVED

REVISIONS

JONES EDMUNDS
730 NE WALDO ROAD, GAINESVILLE, FLORIDA 32641 / (352) 377-5821
3910 S WASHINGTON AVE, SUITE 210, TITUSVILLE, FLORIDA 32780 / (321) 269-2950

SIGNATURES	DATE
DRAWN P. UPSTILL	12.18.13
CHECKED M. O'BRIEN	12.18.13
SUBMITTED: ARCH/ENG OF RECORD W. NICKEL	12/18/13
ST of LICENSURE: FL LICENSE NO: 68638	
APPROVED R. KOLLER	12/18/13
K. MILLER	12/19/13

NATIONAL AERONAUTICS AND SPACE ADMINISTRATION
JOHN F. KENNEDY SPACE CENTER, NASA
KENNEDY SPACE CENTER, FLORIDA

KSC CENTRAL CAMPUS
REPLACEMENT HEADQUARTERS BUILDING
PHASE 1
VOL. 1 OF 4

CIVIL GENERAL NOTES

FILE NO.	SIZE	DWG. NO.
C-12070.00	F	79K39622 VOL 1

PCN. NO. 98745.1a

KSC FORM 1-11 (3/76)(C/C 3/94)

NOTICE: When Government drawings, specifications, or other data are used for any purpose other than in connection with a definitely related Government procurement operation, the United States Government thereby incurs no responsibility nor obligation whatsoever; and the fact that the Government may have formulated, furnished, or in any way supplied the said drawings, specifications or other data is not to be regarded by implication or otherwise as in any manner licensing the holder or any other person or corporation, or conveying any rights or permission to manufacture, use, or sell any patented invention that may in any way be related thereto.

LEGEND

- P-X — STORM PIPING W/ PIPE DESIGNATION
- NEW SANITARY MANHOLE
- WM — WATER MAIN ROUTING
- SAN — SANITARY SEWER ROUTING WITH FLOW DIRECTION
- NG — NATURAL GAS ROUTING
- UGE — UNDERGROUND ELECTRICAL ROUTING
- CW — CHILLED WATER (SUPPLY & RETURN) ROUTING
- COM — COMMUNICATIONS ROUTING
- MATCH LINE
- DETAIL AREA
- S-X — DRAINAGE STRUCTURES W/ STRUCTURE DESIGNATION
- BOLLARD
- REMOVABLE BOLLARD
- STORMWATER FLOW PATTERN
- ASPHALT PAVEMENT
- CONCRETE PAVEMENT/SIDEWALK
- CONTRAST COLOR CONCRETE
- FILL EXISTING DEPRESSIONAL AREA TO GRADE
- SF — SILT FENCE
- FLOATING TURBIDITY BARRIER PER FDOT INDEX 103
- FUTURE EXPANSION
- FIRE HYDRANT
- GATE VALVE
- BID OPTION
- EXISTING STORMWATER FLOW PATTERN
- B-8 — EXISTING BORING
- S-X — MITERED END SECTION W/ STRUCTURE DESIGNATION
- SANITARY LIFT STATION
- C102 — PLAN FUNCTION CODE DESIGNATION
- GRAVEL
- SOD
- RIPRAP
- LIMEROCK
- STABILIZATION
- REMOVE EXISTING TREE
- DEMOLISH EXISTING PAVEMENT, STRUCTURE, UTILITY, OR PAVEMENT MARKING
- UTILITY CONFLICT
- ASPHALT RESTORATION
- BIKE RACK
- DOUBLE CHECK BACKFLOW PREVENTER
- REDUCER PRESSURE BACKFLOW PREVENTER
- CONSTRUCTION WORK ZONE PHASE A
- OPERATIONS AND CHECKOUT BUILDING CONSTRUCTION WORKZONE PHASE C
- CONSTRUCTION WORKZONE PHASE B
- INTERMEDIATE CONSTRUCTION WORK ZONE
- 5 FOOT BUILDING EXCAVATION ENVELOPE. WITHIN THE AREA INDICATED, EXCAVATE ALL SOILS AND ANY OTHER MATERIALS FROM THE EXISTING GRADE LEVEL DOWN TO A DEPTH OF AT LEAST FIVE (5) FEET BELOW THE EXISTING GRADE LEVEL. BACKFILL THE EXCAVATION AND COMPACT THE SUBGRADE AND BACKFILL SOILS IN ACCORDANCE WITH SPECIFICATIONS.
- 100 — COORDINATE POINT

EXISTING CONDITIONS LEGEND

- EXISTING WOOD LINE
- EXISTING FENCELINE
- EXISTING PAVEMENT STRIPING (WHITE OR YELLOW DASHED)
- EXISTING PAVEMENT STRIPING (YELLOW OR BLUE SOLID)
- EXISTING UNDERGROUND UNKNOWN UTILITY
- UGW — EXISTING WATER MAIN
- STORM SEWER
- SAN — EXISTING SANITARY SEWER
- SFM — EXISTING SANITARY FORCE MAIN
- NG — EXISTING NATURAL GAS
- UGE — EXISTING UNDERGROUND ELECTRICAL
- UGCW — EXISTING CHILLED WATER
- STM — EXISTING STEAM SYSTEM
- UGT — EXISTING UNDERGROUND TELEPHONE
- COM — EXISTING UNDERGROUND COMMUNICATIONS LINE
- CPA — EXISTING COMPRESSED AIR
- STS — EXISTING STEAM SYSTEM
- CA — EXISTING COMPRESSED AIR
- AIR — EXISTING COMPRESSED AIR

EXISTING CONDITION SYMBOLS

- = BACK-FLOW PREVENTER
- = BENCHMARK
- = BOLLARD
- = BORING
- = CURB INLET, STORM GRATE
- = CONCRETE LIGHT POLE
- = CLEAN-OUT (SANITARY)
- = CONCRETE POWER POLE
- = ELECTRIC MARKER
- = ELECTRIC BOX
- = ELECTRIC HANDHOLE
- = ELECTRIC METER
- = ELECTRIC MANHOLE
- = ELECTRIC TRANSFORMER
- = FIRE DEPARTMENT CONNECTION
- = FIRE METER
- = FIBER OPTIC CABLE MARKER
- = FIBER OPTIC CABLE HANDHOLE
- = GAS MARKER
- = GAS METER
- = GUY
- = GAS VALVE
- = UTILITIES LOCATION BY GROUND PENETRATING RADAR
- = HYDRANT
- = INDICATOR VALVE
- = LIGHT POLE
- = MANHOLE, UNKNOWN
- = MANHOLE, SANITARY SEWER
- = MANHOLE, STORM SEWER
- = MONITORING WELL
- = STORM GRATE
- = SIGN
- = SEWER VALVE
- = SOFTDIG
- = SPRINKLER HEAD
- = TELEPHONE HANDHOLE
- = TELEPHONE BOX
- = TELEPHONE MARKER
- = TELEPHONE MANHOLE
- = TELEPHONE PEDESTAL
- = TRAFFIC SIGNAL BOX
- = TRAFFIC SIGNAL
- = UTILITY BLOW-OFF
- = WATER MARKER
- = WATER METER
- = WATER SPIGOT
- = WATER VALVE
- = WELL
- = WOOD POWER POLE
- = EXISTING TREES

DETAIL DESIGNATION

1 / C102 — DETAIL DESIGNATION; DRAWING NUMBER DETAIL APPEARS ON OR IS CUT ON

● INDICATES DETAIL IS REFERENCED ON MORE THAN ONE PAGE

SECTION DESIGNATION

1 / C102 — DIRECTION OF SECTION; SECTION DESIGNATION; DRAWING NUMBER SECTION APPEARS ON

SECTION DESIGNATION

1 — 1: INDICATES ONE OR MORE SECTIONS CUT AND SHOWN ON THE SAME DETAIL

ABBREVIATIONS

AC	ASBESTOS CEMENT
ACI	AMERICAN CONCRETE INSTITUTE
ACOE	ARMY CORPS OF ENGINEERS
AD	ALGEBRAIC DIFFERENCE
AIP	ABANDON IN PLACE
ASPH	ASPHALT
ASTM	AMERICAN SOCIETY FOR TESTING AND MATERIALS
AWWA	AMERICAN WATER WORKS ASSOCIATION
BFP	BACK FLOW PREVENTER
BLDG	BUILDING
BLS	BELOW GROUND SURFACE
BMP	BEST MANAGEMENT PRACTICES
BOT	BOTTOM
BVCE	BEGIN VERTICAL CURVE ELEVATION
BVCS	BEGIN VERTICAL CURVE STATION
BW	BARBED WIRE
C/L	CENTERLINE
CBS	CONCRETE BLOCK STRUCTURE
CHD	CHORD
CI	CAST IRON
CIP	CAST IN PLACE
CLF	CHAIN LINK FENCE
CLS	CENTERLINE OF SWALE
CMP	CORRUGATED METAL PIPE
COMM	COMMUNICATION
CONC	CONCRETE
COND	CONDITION
CONT	CONTINUED, CONTINUOUS
CPT	CATHODIC PROTECTION TESTING
CSWY	CAUSEWAY
D/S	DOWNSTREAM
DARCY	DIVERTED AGGREGATE RECLAMATION AND COLLECTION YARD
DBI	DITCH BOTTOM INLET
DI	DUCTILE IRON
DIA	DIAMETER
DIP	DUCTILE IRON PIPE
DWG	DRAWING
E	EAST
E:	EASTING
EF	EACH FACE
EL	ELEVATION
ELB	ELBOW
ELEC	ELECTRICAL
ELEV	ELEVATION
EOP	EDGE OF PAVEMENT
EOW	EDGE OF WATER
EQ	EQUAL
ERCP	ELLIPTICAL REINFORCED CONCRETE PIPE
ETC	ETCETERA
EVCE	END VERTICAL CURVE ELEVATION
EVCS	END VERTICAL CURVE STATION
EW	EACH WAY
EX	EXISTING
EXIST	EXISTING
F	GENERATOR FUEL TANK
FAC	FLORIDA ADMINISTRATIVE CODE
FDC	FIRE DEPARTMENT CONNECTION
FDEP	FLORIDA DEPARTMENT OF ENVIRONMENTAL PROTECTION
FDOT	FLORIDA DEPARTMENT OF TRANSPORTATION
FFE	FINISHED FLOOR ELEVATION
FJ	FLANGED JOINT
FND	FOUND
FT	FEET
FWC	FISH & WILDLIFE COMMISSION
G	GENERATOR
GIS	GEOGRAPHIC INFORMATION SYSTEM
GPR	GROUND PENETRATING RADAR
GV	GATE VALVE
H	HORIZONTAL
H/C	HANDICAP
HDPE	HIGH DENSITY POLYETHYLENE
HP	HIGH POINT
HW	HEADWALL
ID	IDENTIFICATION
IE	INVERT ELEVATION
IN	INCH
INCL	INCLUDING
INDEX	STANDARD INDEX, FLORIDA DEPARTMENT OF TRANSPORTATION STANDARD INDEX
INFO	INFORMATION
INV	INVERT
KSC	KENNEDY SPACE CENTER
L	LENGTH, CURVE LENGTH
LBR	LIMEROCK BEARING RATIO
LBS/FT	POUNDS PER LINEAR FOOT
LF	LINEAR FEET
LIDAR	LIGHT DETECTION AND RANGING
LP	LOW POINT
LT	LEFT
MAX	MAXIMUM
MES	MITERED END SECTION
MH	MANHOLE
MIN	MINIMUM
MNPT	MALE NATIONAL PIPE THREAD
MPH	MILES PER HOUR
MUTCD	MANUAL ON UNIFORM TRAFFIC CONTROL DEVICES
N	NORTH
N:	NORTHING
N/A	NOT APPLICABLE
NASA	NATIONAL AERONAUTICS AND SPACE ADMINISTRATION
NIC	NOT IN CONTRACT
NO	NUMBER
NOM	NOMINAL
NPT	NATIONAL PIPE THREAD
NTS	NOT TO SCALE
O & C	OPERATIONS AND CHECKOUT BUILDING
OC	ON CENTER
OSHA	OCCUPATIONAL SAFETY AND HEALTH ADMINISTRATION
PC	POINT OF CURVATURE
PCB	POLYCHLORINATED BIPHENYLS
PED	PEDESTRIAN
PGL	PROPOSED GRADE LINE
PI	POINT OF INTERSECTION
PIV	POST INDICATOR VALVE
POV	PRIVATELY OWNED VEHICLE
PSF	POUNDS PER SQUARE FOOT
PSI	POUNDS PER SQUARE INCH
PT	POINT OF TANGENCY
PV	PLUG VALVE
PVC	POLYVINYL CHLORIDE
PVI	POINT OF VERTICAL INTERSECTION
R	RADIUS
RCP	REINFORCED CONCRETE PIPE
REINF	REINFORCEMENT
RMJ	RESTRAINED MECHANICAL JOINT
RPOJ	RESTRAINED PUSH-ON JOINT
RT	RIGHT
S	SOUTH
SCH	SCHEDULE
SDR	STANDARD DIMENSION RATIO
SEPT	SEPTEMBER
S/W	SIDEWALK
SE	SOUTHEAST
SI	STANDARD INDEX, FLORIDA DEPARTMENT OF TRANSPORTATION STANDARD INDEX
SJRWMD	SAINT JOHNS RIVER WATER MANAGEMENT DISTRICT
SPEC	SPECIFICATION
SQ	SQUARE
SS	STAINLESS STEEL
STA	STATION
STBLZ	STABILIZED
STD	STANDARD
STL	STEEL
STRY	STORY
SWJ	SOLVENT WELD JOINT
SWMU	SOLID WASTE MANAGEMENT UNIT
SWPPP	STORMWATER POLLUTION PREVENTION PLAN
SY	SQUARE YARD
T	TRANSFORMER
TAN	TANGENT
TCLP	TOXICITY CHARACTERISTIC LEACHING PROCEDURE
TOB	TOP OF BANK
TOE	TOE OF SLOPE
TRAV	TRAVERSE
TYP	TYPICAL
U/S	UPSTREAM
UGE	UNDERGROUND ELECTRIC
UNO	UNLESS NOTED OTHERWISE
USACE	ARMY CORPS OF ENGINEERS
V	VERTICAL
VC	VERTICAL CURVE
VCP	VITRIFIED CLAY PIPE
VERT	VERTICAL
VOL	VOLUME
W	WEST, WIDTH
W/	WITH
W/WW	WATER/WASTE WATER
WM	WATER MAIN
WWF	WELDED WIRE FABRIC
WWM	WELDED WIRE MESH
XING	CROSSING

SYM	ZONE	REVISIONS	DATE	APPROVED

JONES EDMUNDS
730 NE WALDO ROAD, GAINESVILLE, FLORIDA 32641 / (352) 377-5821
3910 S WASHINGTON AVE, SUITE 210, TITUSVILLE, FLORIDA 32780 / (321) 269-2950

SIGNATURES	DATE
DRAWN P. UPSTILL	12.18.13
CHECKED M. O'BRIEN	12.18.13
SUBMITTED: ARCH/ENG OF RECORD W. NICKEL	12/18/13
ST of LICENSURE: FL LICENSE NO: 68638	
APPROVED R. KOLLER	12/18/13
K. MILLER	12/19/13

NATIONAL AERONAUTICS AND SPACE ADMINISTRATION
JOHN F. KENNEDY SPACE CENTER, NASA
KENNEDY SPACE CENTER, FLORIDA

KSC CENTRAL CAMPUS
REPLACEMENT HEADQUARTERS BUILDING
PHASE 1
VOL. 1 OF 4

LEGEND AND ABBREVIATIONS

C002

FILE NO.	SIZE	DWG. NO.
C-12070.00	F	79K39622 VOL 1

PCN. NO. 98745.1a — SHEET 15

NOTICE: When Government drawings, specifications, or other data are used for any purpose other than in connection with a definitely related Government procurement operation, the United States Government thereby incurs no responsibility nor obligation whatsoever; and the fact that the Government may have formulated, furnished, or in any way supplied the said drawings, specifications or other data is not to be regarded by implication or otherwise as in any manner licensing the holder or any other person or corporation, or conveying any rights or permission to manufacture, use, or sell any patented invention that may in any way be related thereto.

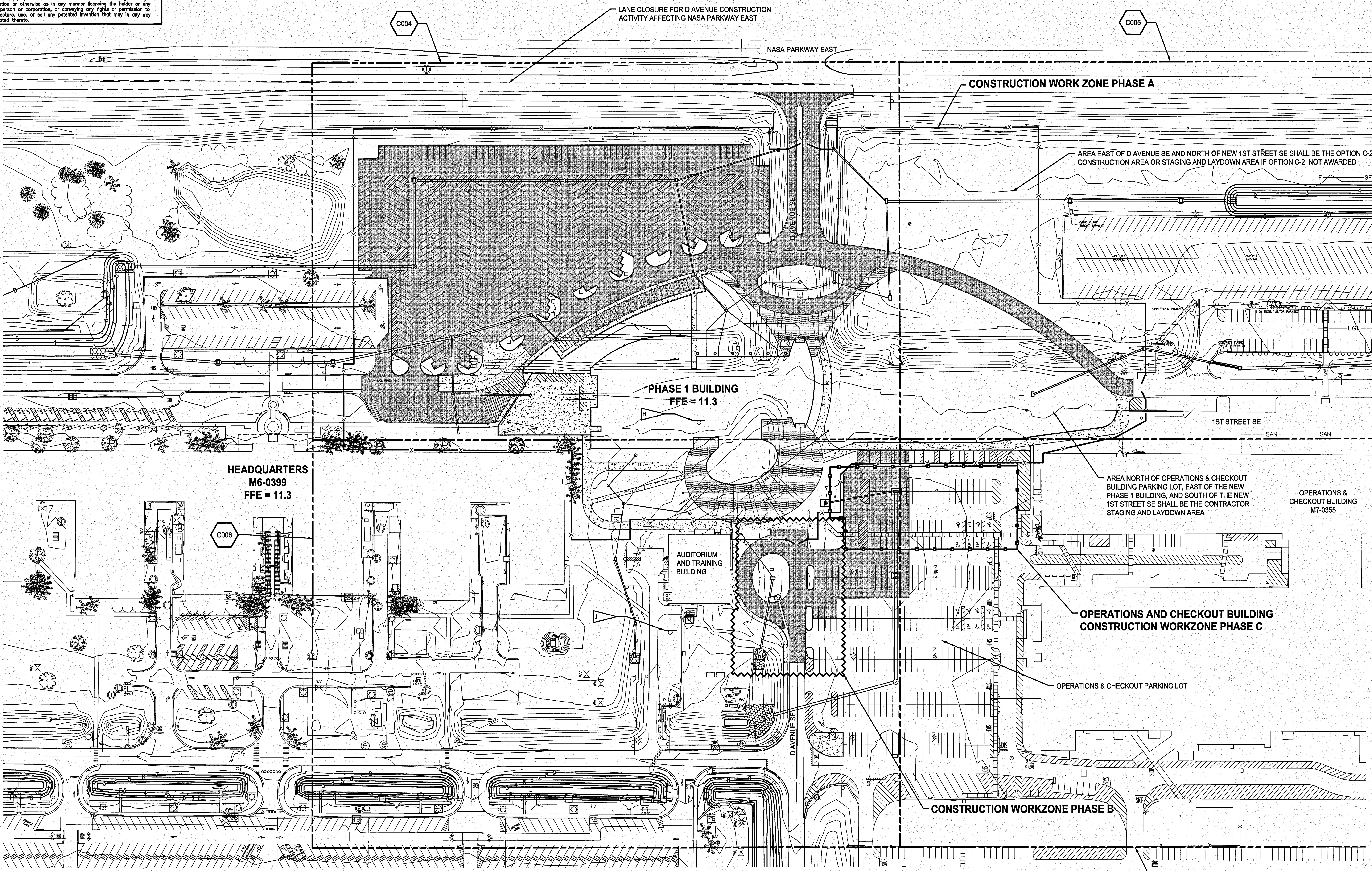

NOTES

A. THE CONSTRUCTION PHASING PLANS PROVIDE GUIDANCE FOR THE INTENDED MAJOR SEQUENCES OF CONSTRUCTION. GENERAL LIMITS OF TEMPORARY CONSTRUCTION FENCING ARE INDICATED TO DEFINE WORK AREAS AVAILABLE TO THE CONTRACTOR. PROPOSED WORK SUCH AS EARTHWORK, UTILITY CONSTRUCTION, MINOR RESURFACING/PAVEMENT RECONSTRUCTION DOES EXIST OUTSIDE OF THE INDICATED WORK AREAS, AND PROTECT ION OF, AND ACCESS TO, THOSE AREAS IS THE RESPONSIBILITY OF THE CONTRACTOR. SCHEDULING OF WORK IN THOSE AREAS REQUIRES APPROVAL OF THE CONTRACTING OFFICER, AND COORDINATION WITH THE CONTRACTING OFFICER SHALL BEGIN AT LEAST 14 DAYS PRIOR TO THE START OF THAT WORK. NUMBER OF GATES, SIZES AND LOCATIONS WITHIN THE TEMPORARY FENCING SHALL BE DETERMINED AND INSTALLED AT THE DISCRETION OF THE CONTRACTOR, AND ACCESS INTO WORK AREAS SHALL BE CONTROLLED AT ALL TIMES.

B. PHASE A ENCOMPASSES THE MAJORITY OF THE PROPOSED WORK AND INCLUDES THE PHASE 1 BUILDING, RELOCATED 1ST STREET, THE NORTHWEST PARKING AREAS, THE NORTHEAST PARKING AREA DENOTED AS OPTION C-2, AND THE RECONSTRUCTION OF D AVENUE NORTH OF 1ST STREET. THE CONTRACTOR SHALL MAINTAIN VEHICULAR ACCESS TO THE PARKING LOT OFF 1ST STREET IMMEDIATELY NORTH OF THE EXISTING HEADQUARTERS' BUILDING. CONTRACTOR SHALL ALSO MAINTAIN PEDESTRIAN ACCESS FROM THE OPERATIONS AND CHECKOUT BUILDING AND FROM THE EXISTING HEADQUARTERS BUILDING TO THE AUDITORIUM AND TRAINING BUILDING DURING AND BETWEEN ALL PHASES OF WORK. CHANGES TO PAVEMENT STRIPING WITHIN THE OPERATIONS AND CHECKOUT BUILDING PARKING LOT ADJACENT TO THIS WORK PHASE MAY BE REQUIRED TO MAINTAIN SAFE VEHICLE AND PEDESTRIAN MOVEMENTS.

C. PHASE B ENCOMPASSES THE AREA SOUTH OF THE NEW HEADQUARTERS BUILDING ALONG D AVENUE. CONTRACTOR SHALL MAINTAIN PEDESTRIAN ACCESS FROM THE OPERATIONS AND CHECKOUT BUILDING AND FROM THE EXISTING HEADQUARTERS BUILDING TO THE AUDITORIUM AND TRAINING BUILDING DURING AND BETWEEN ALL PHASES OF WORK.

D. PHASE C ENCOMPASSES THE WEST PORTION OF THE OPERATIONS AND CHECKOUT PARKING LOT. ALL INGRESS/EGRESS POINTS TO THE OPERATIONS AND CHECKOUT BUILDING SHALL BE MAINTAINED.

E. NASA PARKWAY LANE CLOSURE SHALL BE IMPLEMENTED WHENEVER WORK ENCROACHES UPON THE PAVEMENT OR GRASS SHOULDER AREA.

F. OTHER MAINTENANCE OF TRAFFIC OPERATIONS NOT INDICATED IN THE CONSTRUCTION PHASING PLANS WILL BE REQUIRED AND SHALL BE THE RESPONSIBILITY OF THE CONTRACTOR.

G. PHASES SHALL BE IMPLEMENTED SEQUENTIALLY (A-C) UNLESS APPROVED OTHERWISE BY THE CONTRACTING OFFICER. PHASES SHALL NOT RUN CONCURRENTLY UNLESS APPROVED BY THE CONTRACTING OFFICER.

H — REMOVE AND RELOCATE EXISTING MARSHALLING SIGN.

J — RELOCATED MARSHALLING SIGN.

GRAPHIC SCALE
0 30 60 120 180
SCALE IN FEET
1" = 60'

N

SYM	ZONE	REVISIONS	DATE	APPROVED

JONES EDMUNDS
730 NE WALDO ROAD, GAINESVILLE, FLORIDA 32641 / (352) 377-5821
3910 S WASHINGTON AVE, SUITE 210, TITUSVILLE, FLORIDA 32780 / (321) 269-2950

SIGNATURES	DATE
DRAWN P. UPSTILL	12.18.13
CHECKED M. O'BRIEN	12.18.13
SUBMITTED: ARCH/ENG OF RECORD W. NICKEL	12/18/13
ST of LICENSURE: FL LICENSE NO: 58638	
APPROVED P. KOLLER	12/18/13
K. MILLER	12/19/13

NATIONAL AERONAUTICS AND SPACE ADMINISTRATION
JOHN F. KENNEDY SPACE CENTER, NASA
KENNEDY SPACE CENTER, FLORIDA

KSC CENTRAL CAMPUS
REPLACEMENT HEADQUARTERS BUILDING
PHASE 1
VOL. 1 OF 4
CONSTRUCTION PHASING OVERALL PLAN

FILE NO. C-12070.00 | SIZE F | DWG. NO. 79K39622 VOL 1
PCN. NO. 98745.1a | SHEET 16

C003

KSC FORM 1-11 (3/76)(C/G 3/94)

NOTICE: When Government drawings, specifications, or other data are used for any purpose other than in connection with a definitely related Government procurement operation, the United States Government thereby incurs no responsibility nor obligation whatsoever; and the fact that the Government may have formulated, furnished, or in any way supplied the said drawings, specifications or other data is not to be regarded by implication or otherwise as in any manner licensing the holder or any other person or corporation, or conveying any rights or permission to manufacture, use, or sell any patented invention that may in any way be related thereto.

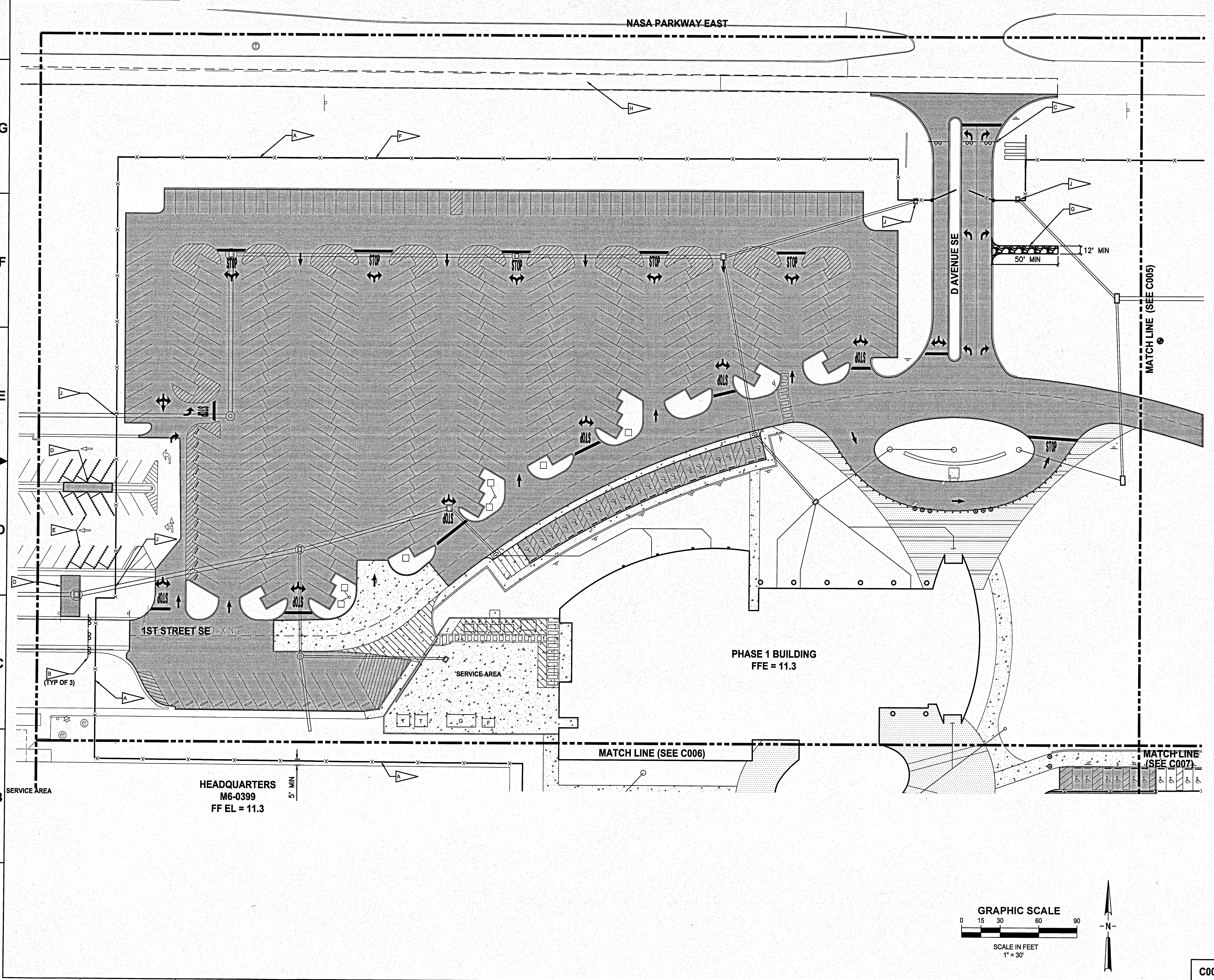

NOTES

- A: CONSTRUCTION WORK ZONE –PHASE A
- B: TYPE III BARRICADE, MINIMUM NUMBER AS INDICATED.
- C: TYPE III BARRICADE, NUMBER SUFFICIENT TO PREVENT ACCESS ACROSS EXISTING AND/OR PROPOSED PAVEMENT.
- D: TEMPORARY ACCESS DRIVE. RESTORE TO ORIGINAL CONDITION AFTER CONSTRUCTION. SEE DETAIL 2/C207
- E: HYDRO-BLAST TO REMOVE EXISTING PAVEMENT MARKINGS. RESTORE TO ORIGINAL COLOR AND STYLE UPON COMPLETION OF CONSTRUCTION.
- F: 8 FOOT TEMPORARY PORTABLE CHAIN LINK FENCE WITH SCREENING. RESTORE SITE AND SURFACES TO ORIGINAL CONDITION AFTER REMOVAL.
- G: STABILIZED CONSTRUCTION ACCESS. SEE EROSION CONTROL PLANS.
- H: TRAFFIC CONTROL WHEN WORKING WITHIN PAVEMENT OR SHOULDER OF NASA PARKWAY PER "MULTILANE, WORK WITHIN TRAVEL WAY MEDIAN OR OUTSIDE LANE" PER FDOT SI 613.
- J: TEMPORARY FENCE MAY BE REMOVED FOR CONSTRUCTION OF UTILITIES OR OTHER IMPROVEMENTS AS NECESSARY. FENCE TO BE RE-INSTALLED AT END OF EACH WORK DAY AND ACCESS CONTROLLED AT ALL TIMES.

SYM	ZONE	REVISIONS	DATE	APPROVED

JONES EDMUNDS
730 NE WALDO ROAD, GAINESVILLE, FLORIDA 32641 / (352) 377-5821
3910 S WASHINGTON AVE, SUITE 210, TITUSVILLE, FLORIDA 32780 / (321) 269-2950

SIGNATURES	DATE
DRAWN P. UPSTILL	12.18.13
CHECKED M. O'BRIEN	12.18.13
SUBMITTED: ARCH/ENG OF RECORD W. NICKEL	12/18/13
ST of LICENSURE: FL LICENSE NO: 68638	
APPROVED R. KOLLER	12/18/13
K. MILLER	12/19/13

NATIONAL AERONAUTICS AND SPACE ADMINISTRATION
JOHN F. KENNEDY SPACE CENTER, NASA
KENNEDY SPACE CENTER, FLORIDA

KSC CENTRAL CAMPUS
REPLACEMENT HEADQUARTERS BUILDING
PHASE 1
VOL. 1 OF 4

CONSTRUCTION PHASING PLAN

FILE NO.	SIZE	DWG. NO.
C-12070.00	F	79K39622 VOL 1

PCN. NO. 98745.1a
SHEET 17

C004

NOTICE: When Government drawings, specifications, or other data are used for any purpose other than in connection with a definitely related Government procurement operation, the United States Government thereby incurs no responsibility nor obligation whatsoever; and the fact that the Government may have formulated, furnished, or in any way supplied the said drawings, specifications or other data is not to be regarded by implication or otherwise as in any manner licensing the holder or any other person or corporation, or conveying any rights or permission to manufacture, use, or sell any patented invention that may in any way be related thereto.

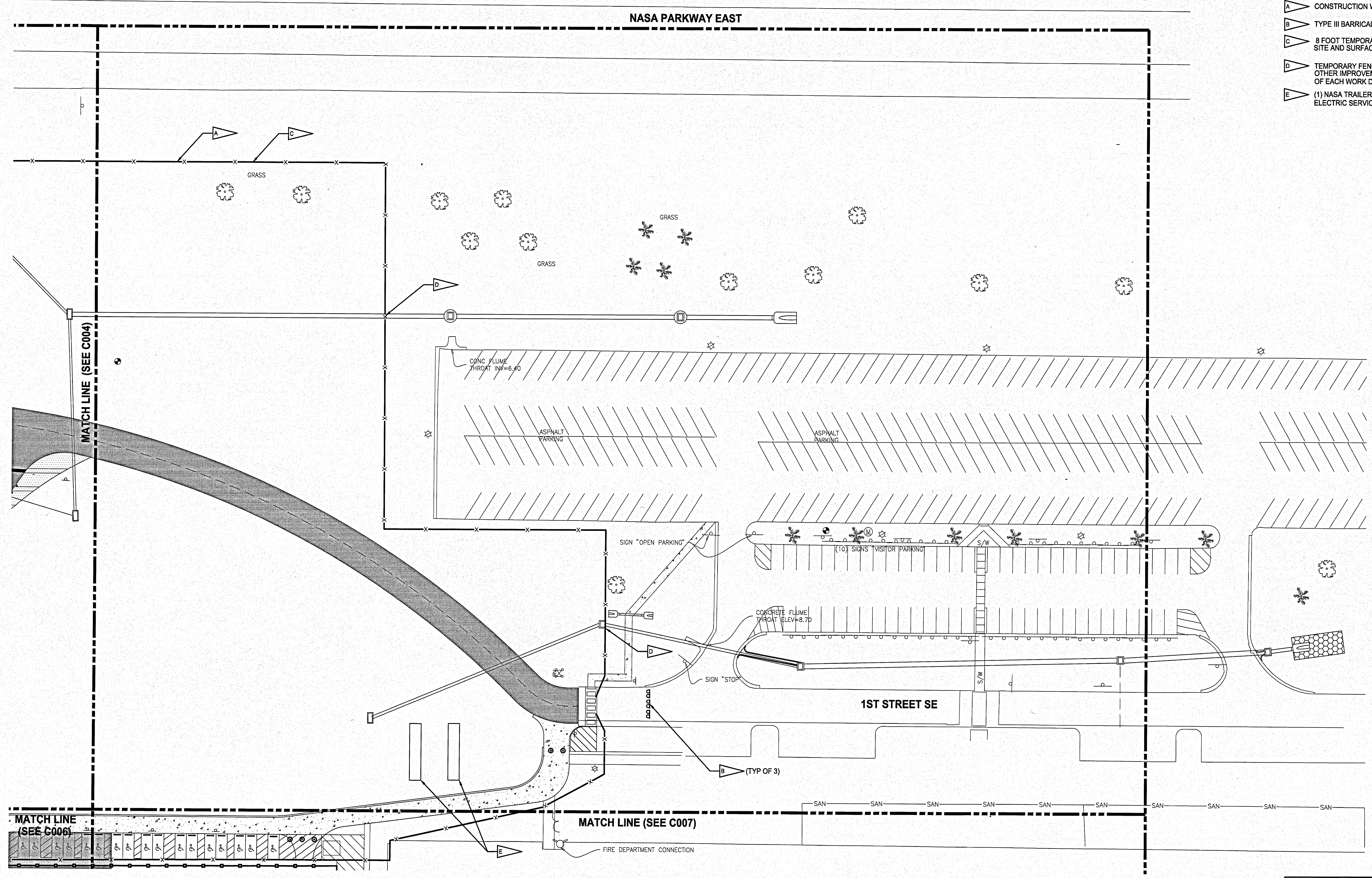

NOTES

A. CONSTRUCTION WORK ZONE –PHASE A

B. TYPE III BARRICADE, MINIMUM NUMBER AS INDICATED.

C. 8 FOOT TEMPORARY PORTABLE CHAINLINK FENCE WITH SCREENING. RESTORE SITE AND SURFACES TO ORIGINAL CONDITION AFTER REMOVAL.

D. TEMPORARY FENCE MAY BE REMOVED FOR CONSTRUCTION OF UTILITIES OR OTHER IMPROVEMENTS AS NECESSARY. FENCE TO BE RE-INSTALLED AT END OF EACH WORK DAY.

E. (1) NASA TRAILER AND CONTRACTOR TRAILERS AS REQUIRED. COORDINATE ELECTRIC SERVICE WITH CONTRACTING OFFICER.

GRAPHIC SCALE

0 15 30 60 90

SCALE IN FEET
1" = 30'

N

SYM	ZONE	REVISIONS	DATE	APPROVED

JONES EDMUNDS
730 NE WALDO ROAD, GAINESVILLE, FLORIDA 32641 / (352) 377-5821
3910 S WASHINGTON AVE, SUITE 210, TITUSVILLE, FLORIDA 32780 / (321) 269-2950

SIGNATURES	DATE
DRAWN P. UPSTILL	12.18.13
CHECKED M. O'BRIEN	12.18.13
SUBMITTED: ARCH/ENG OF RECORD W. NICKEL	12/18/13
ST of LICENSURE: FL LICENSE NO: 68638	
APPROVED R. KOLLER	12/18/13
K. MILLER	12/19/13

NATIONAL AERONAUTICS AND SPACE ADMINISTRATION
JOHN F. KENNEDY SPACE CENTER, NASA
KENNEDY SPACE CENTER, FLORIDA

KSC CENTRAL CAMPUS
REPLACEMENT HEADQUARTERS BUILDING
PHASE 1
VOL. 1 OF 4

CONSTRUCTION PHASING PLAN

C005

FILE NO.	SIZE	DWG. NO.
C-12070.00	F	79K39622 VOL 1

PCN. NO. 98745.1a

SHEET 18

NOTICE: When Government drawings, specifications, or other data are used for any purpose other than in connection with a definitely related Government procurement operation, the United States Government thereby incurs no responsibility nor obligation whatsoever; and the fact that the Government may have formulated, furnished, or in any way supplied the said drawings, specifications or other data is not to be regarded by implication or otherwise as in any manner licensing the holder or any other person or corporation, or conveying any rights or permission to manufacture, use, or sell any patented invention that may in any way be related thereto.

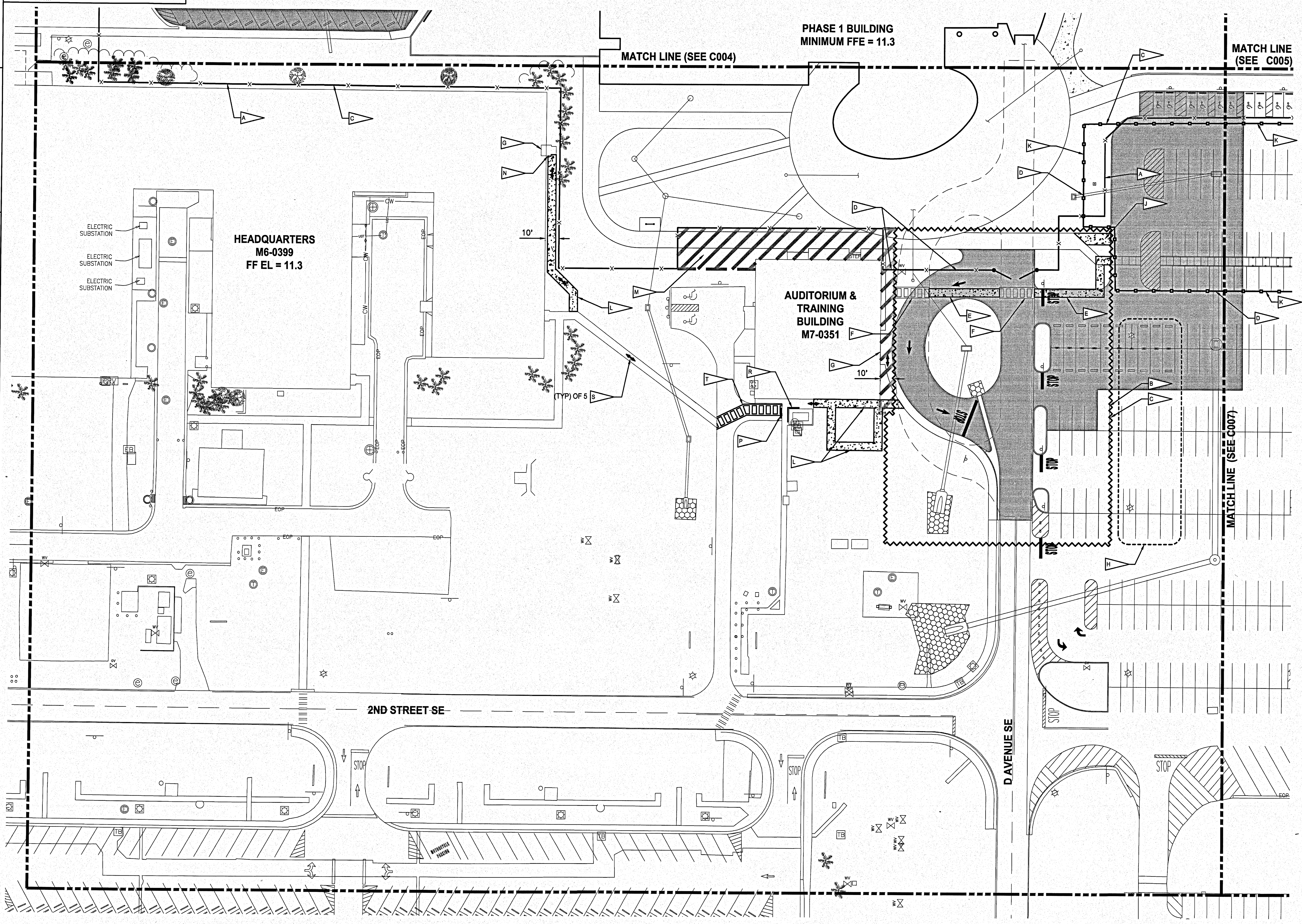

NOTES

- A: CONSTRUCTION WORK ZONE – PHASE A
- B: CONSTRUCTION WORK ZONE – PHASE B
- C: 8 FOOT TEMPORARY PORTABLE CHAIN LINK FENCE WITH SCREENING. RESTORE SITE AND SURFACES TO ORIGINAL CONDITION AFTER REMOVAL.
- D: TEMPORARY FENCE MAY BE REMOVED FOR CONSTRUCTION OF UTILITIES PR OTHER IMPROVEMENTS AS NECESSARY. FENCE TO BE RE-INSTALLED AT END OF EACH WORK DAY AND ACCESS CONTROLLED AT ALL TIMES.
- E: 6 FOOT WIDE CONCRETE WALK. CONSTRUCTED PRIOR TO PHASE A CHAIN LINK FENCE INSTALLATION AND REMOVED AFTER PHASE A WORK COMPLETION. SEE DETAIL 6/C207
- F: 12 INCH WHITE CROSSWALK PAVEMENT MARKINGS PER FDOT SI 17346. CONSTRUCTED PRIOR TO PHASE A CHAIN LINK FENCE INSTALLATION AND REMOVED AFTER PHASE A WORK COMPLETION.
- G: ACCESS TO DOORWAY SHALL BE MAINTAINED AT ALL TIMES AND SHALL BE ADA COMPLIANT.
- H: REMOVE PAVEMENT MARKINGS BY HYDROBLASTING THAT CONFLICT WITH CONSTRUCTION WORK ZONES AND MAINTENANCE OF TRAFFIC. PROVIDE TEMPORARY PAVEMENT MARKINGS TO SAFELY REDIRECT TRAFFIC AT INTERRUPTED AISLES. PROVIDE NEW PAVEMENT MARKINGS IN ACCORDANCE WITH EXISTING/NEW MARKINGS AS APPROPRIATE AFTER EACH PHASE OF CONSTRUCTION.
- J: 6 FOOT WIDE CONCRETE WALK. CONSTRUCTED PRIOR TO PHASE B CHAIN LINK FENCE INSTALLATION AND REMOVED AFTER PHASE A WORK COMPLETION. SEE DETAIL 6/C207
- K: CONSTRUCTION WORK ZONE – PHASE C.
- L: CONSTRUCT TEMPORARY 6 FOOT WIDE CONCRETE WALK PRIOR TO THE START OF ANY CONSTRUCTION PHASING. TO BE REMOVED AFTER ACCEPTANCE OF WORK WITHIN WORK ZONES A AND B.
- M: AN INTERMEDIATE CONSTRUCTION WORK ZONE WILL BE PERMITTED TO CONSTRUCT IMPROVEMENTS ADJACENT TO THE AUDITORIUM & TRAINING BUILDING. BUILDING ACCESS CAN BE SHUT DOWN FOR A MAXIMUM OF 30 CONSECUTIVE DAYS. COORDINATE WITH CONTRACTING OFFICER.
- N: MATCH EXISTING GRADE OF RAMPED SIDEWALK AT BUILDING.
- P: REMOVE WHEEL STOP AND ADA SIGN AND REINSTALL AT PROJECT COMPLETION
- R: CONTRACTOR TO INSTALL PLYWOOD PROTECTION AT CORNER OF VERTICAL PIPING TO HEIGHT OF 7 FEET TO PROTECT PEDESTRIANS
- S: YELLOW "DOUBLE ARROW". TO BE REMOVED AT COMPLETION OF PROJECT
- T: 12" WHITE CROSSWALK PAVEMENT MARKINGS PER FDOT SI 17346

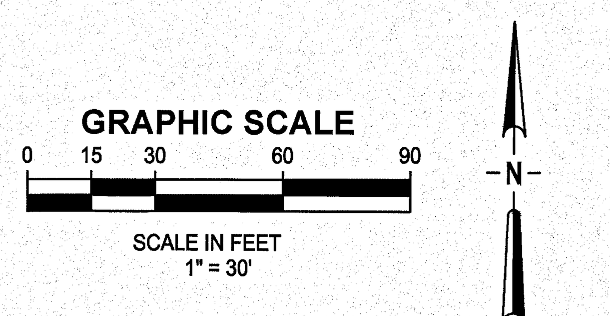

SYM	ZONE		DATE	APPROVED

REVISIONS

JONES EDMUNDS
730 NE WALDO ROAD, GAINESVILLE, FLORIDA 32641 / (352) 377-5821
3910 S WASHINGTON AVE, SUITE 210, TITUSVILLE, FLORIDA 32780 / (321) 269-2950

SIGNATURES	DATE
DRAWN P. UPSTILL	12.18.13
CHECKED M. O'BRIEN	12.18.13
SUBMITTED: ARCH/ENG OF RECORD W. NICKEL	12/18/13
ST of LICENSURE: FL LICENSE NO: 68638	
APPROVED R. KOLLER	12/18/13
K. MILLER	12/19/13

NATIONAL AERONAUTICS AND SPACE ADMINISTRATION
JOHN F. KENNEDY SPACE CENTER, NASA
KENNEDY SPACE CENTER, FLORIDA

KSC CENTRAL CAMPUS
REPLACEMENT HEADQUARTERS BUILDING
PHASE 1
VOL. 1 OF 4

CONSTRUCTION PHASING PLAN

FILE NO.	SIZE	DWG. NO.
C-12070.00	F	79K39622 VOL 1

PCN. NO. 98745.1a

C006

KSC FORM 1-11 (3/76)(C/G 3/94)

NOTICE: When Government drawings, specifications, or other data are used for any purpose other than in connection with a definitely related Government procurement operation, the United States Government thereby incurs no responsibility nor obligation whatsoever; and the fact that the Government may have formulated, furnished, or in any way supplied the said drawings, specifications or other data is not to be regarded by implication or otherwise as in any manner licensing the holder or any other person or corporation, or conveying any rights or permission to manufacture, use, or sell any patented invention that may in any way be related thereto.

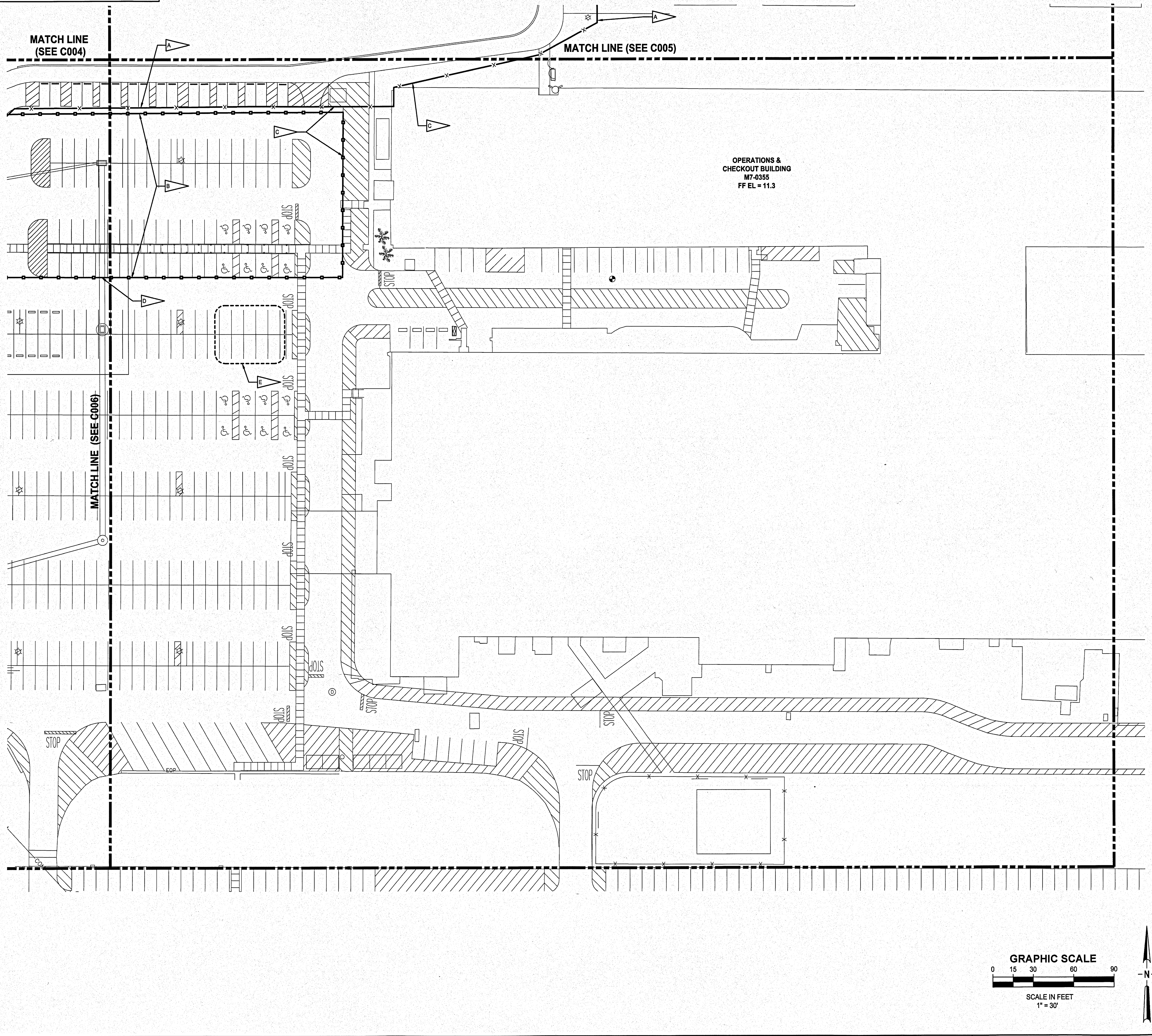

NOTES

- A — CONSTRUCTION WORK ZONE – PHASE A
- B — CONSTRUCTION WORK ZONE – PHASE C
- C — 8 FOOT TEMPORARY PORTABLE CHAIN LINK FENCE WITH SCREENING. RESTORE SITE AND SURFACES TO ORIGINAL CONDITION AFTER REMOVAL.
- D — TEMPORARY FENCE MAY BE REMOVED FOR CONSTRUCTION OF UTILITIES OR OTHER IMPROVEMENTS AS NECESSARY. FENCE TO BE RE-INSTALLED AT END OF EACH WORK DAY AND ACCESS CONTROLLED AT ALL TIMES.
- E — TEMPORARY SIGNS FOR ADA SPACES

SYM	ZONE	REVISIONS	DATE	APPROVED

JONES EDMUNDS
730 NE WALDO ROAD, GAINESVILLE, FLORIDA 32641 / (352) 377-5821
3910 S WASHINGTON AVE, SUITE 210, TITUSVILLE, FLORIDA 32780 / (321) 269-2950

SIGNATURES	DATE
DRAWN P. UPSTILL	12.18.13
CHECKED M. O'BRIEN	12.18.13
SUBMITTED: ARCH/ENG OF RECORD W. NICKEL	12/18/13
ST of LICENSURE: FL LICENSE NO: 68638	
APPROVED R. KOLLER	12/18/13
K. MILLER	12/19/13

NATIONAL AERONAUTICS AND SPACE ADMINISTRATION
JOHN F. KENNEDY SPACE CENTER, NASA
KENNEDY SPACE CENTER, FLORIDA

KSC CENTRAL CAMPUS
REPLACEMENT HEADQUARTERS BUILDING
PHASE 1
VOL. 1 OF 4

CONSTRUCTION PHASING PLAN

FILE NO.	SIZE	DWG. NO.
C-12070.00	F	79K39622 VOL 1

PCN. NO. 98745.1a — SHEET 20

C007

KSC FORM 1-11 (3/76)(C/G 3/94)

NOTICE: When Government drawings, specifications, or other data are used for any purpose other than in connection with a definitely related Government procurement operation, the United States Government thereby incurs no responsibility nor obligation whatsoever; and the fact that the Government may have formulated, furnished, or in any way supplied the said drawings, specifications or other data is not to be regarded by implication or otherwise as in any manner licensing the holder or any other person or corporation, or conveying any rights or permission to manufacture, use, or sell any patented invention that may in any way be related thereto.

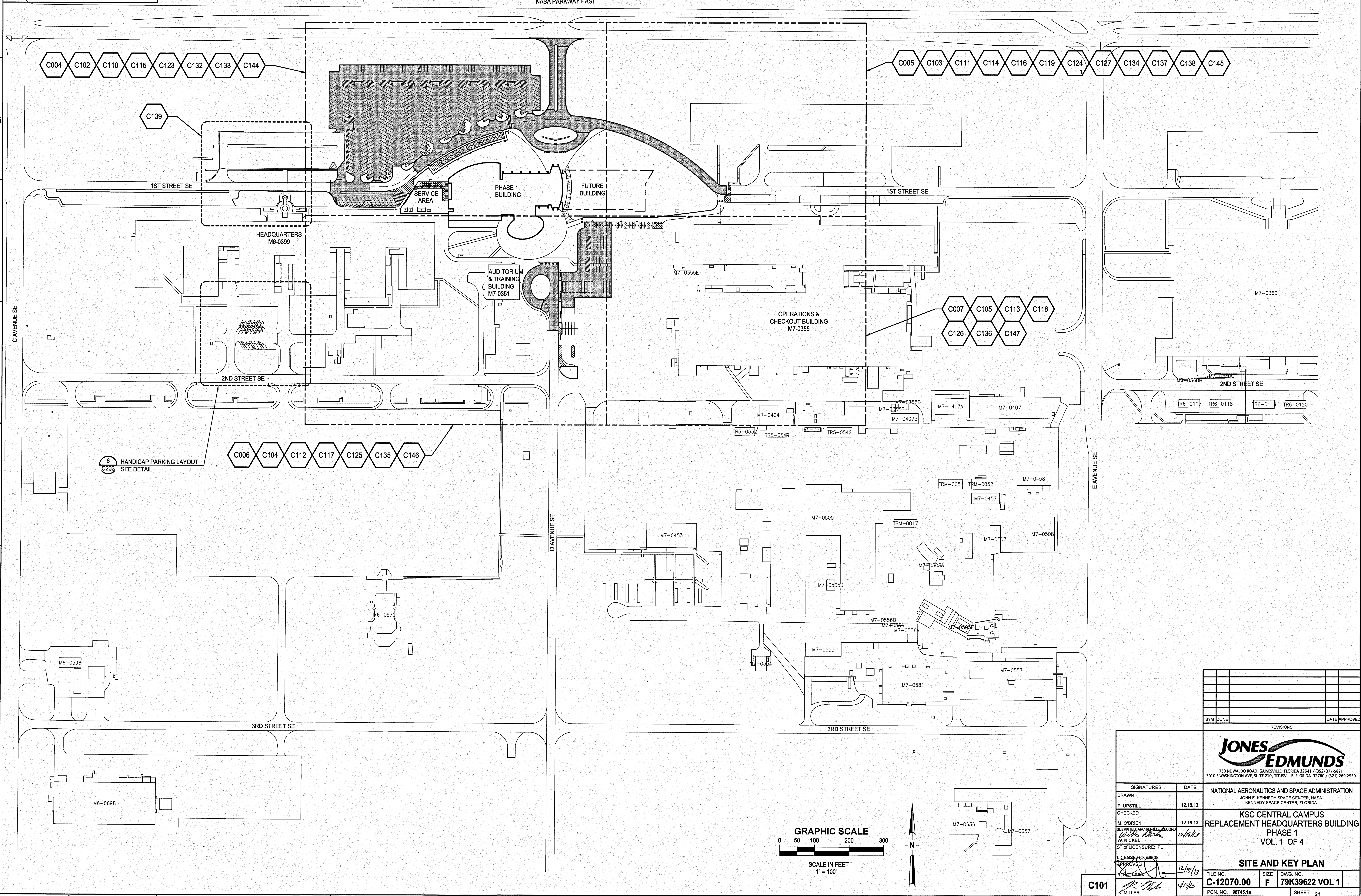

SYM	ZONE	REVISIONS	DATE	APPROVED

JONES EDMUNDS
730 NE WALDO ROAD, GAINESVILLE, FLORIDA 32641 / (352) 377-5821
3910 S WASHINGTON AVE, SUITE 210, TITUSVILLE, FLORIDA 32780 / (321) 269-2950

SIGNATURES	DATE
DRAWN P. UPSTILL	12.18.13
CHECKED M. O'BRIEN	12.18.13
SUBMITTED: ARCH/ENG OF RECORD W. NICKEL	12/18/13
ST of LICENSURE: FL LICENSE NO: 68638	
APPROVED R. KOLLER	12/18/13
K. MILLER	12/19/13

NATIONAL AERONAUTICS AND SPACE ADMINISTRATION
JOHN F. KENNEDY SPACE CENTER, NASA
KENNEDY SPACE CENTER, FLORIDA

KSC CENTRAL CAMPUS
REPLACEMENT HEADQUARTERS BUILDING
PHASE 1
VOL. 1 OF 4

SITE AND KEY PLAN

FILE NO.	SIZE	DWG. NO.
C-12070.00	F	79K39622 VOL 1

PCN. NO. 98745.1a

SHEET 21

C101

KSC FORM 1-11 (3/76)(C/G 3/94)

NOTICE: When Government drawings, specifications, or other data are used for any purpose other than in connection with a definitely related Government procurement operation, the United States Government thereby incurs no responsibility nor obligation whatsoever; and the fact that the Government may have formulated, furnished, or in any way supplied the said drawings, specifications or other data is not to be regarded by implication or otherwise as in any manner licensing the holder or any other person or corporation, or conveying any rights or permission to manufacture, use, or sell any patented invention that may in any way be related thereto.

NASA PARKWAY EAST

1ST STREET SE

D AVENUE SE

MATCH LINE (SEE C103)

MATCH LINE (SEE C104)

MATCH LINE (SEE C105)

HEADQUARTERS
M6-0399
FFE = 11.3

PROJECT BENCH MARK
SET N&D
ID: LS 5117
ELEV=9.80
N=1523783.25
E=768465.54

PROJECT BENCH MARK
SET REBAR & CAP
ID: LS 5117
ELEV=8.38
N=1523648.00
E=768310.68

PROJECT BENCH MARK
SET REBAR & CAP
ID: LS 5117
ELEV=9.83
N=1523646.20
E=768772.13

BENCH MARK
JOINT BASE OPERATIONS
SERVICE CONTRACT JBOSC
ELEV=10.28
N=1523627.85
E=769071.29

(3) STORM PIPES (36" RCP)
(N PIPE) W INV=0.52
E INV=0.47
(CENTER PIPE) W INV=0.53
E INV=0.44
(S PIPE) W INV=0.50
E INV=0.48

STORM PIPE 24" RCP
N INV=4.32 (MES)
S INV=4.76

STORM PIPE 24" RCP
N INV=4.98 (MES)
S INV=5.17

STORM PIPE 7' DEEP 24" RCP
W INV=2.95
E INV=2.62 (MES)

STORM PIPE 36" RCP
N INV=2.01
S INV=2.40

STORM PIPE 6" PVC
SW INV=7.84 (MES)

STORM CONTROL STRUCTURE
TOP ELEV=7.12
WEIR ELEV=6.36

HEADWALL
TOP ELEV=5.35

HEADWALL
TOP ELEV=5.14

HEADWALL
TOP ELEV=6.12

SANITARY MANHOLE
RIM ELEV=7.78
S INV=0.39 (12" VCP)
E INV=0.46 (12" VCP)

STORM INLET
TOP ELEV=7.92

STORM INLET
TOP ELEV=7.95

STORM INLET
TOP ELEV=8.77

STORM INLET
TOP ELEV=8.61

CURB INLET
TOP ELEV=9.80

SOFTDIG TH1
5'-11" DEEP

SOFTDIG TH2
12" CONDUIT
6'-6" DEEP

SOFTDIG TH3
4" PVC
2'-6" DEEP

SOFTDIG TH4
12" CONDUIT
8'-6" DEEP

SOFTDIG TH5
7'-3" DEEP

BORING B9
BORING B10
BORING B11
BORING B12
BORING B13
BORING B14
BORING B17 "RESHOOT"
BORING B18
BORING B6 "RESHOOT"
BORING B7 "RESHOOT"

GPR 1.5' DEEP
GPR 5.5' DEEP
GPR 6' DEEP
GPR 6.5' DEEP
GPR 7' DEEP
GPR 8' DEEP

SIGN "INTERSECTION INFO"
SIGN "15 MPH"
SIGN "35 MPH"
SIGN "45 MPH"
SIGN "PED XING"
SIGN "NO TRUCKS"
SIGN "DO NOT ENTER"
SIGN "STOP"
SIGN "INFO"
SIGN "PEDESTRIAN CROSSING"

(12) HANDI-CAP SIGNS
(14) HANDI-CAP SIGNS

CONCRETE
CONC PATCH
CONC PAD ABANDONED
CONCRETE WHEEL STOPS (TYPICAL)
LANDSCAPING
GRAVEL
GRASS
TREELINE
TRAIL
EXERCISE STATION
S/W
EOP
UGT
UGW
UGE
NG
SAN
PSS6
MSS4

"ALLIGATORS"
"OR WARDING"

GRAPHIC SCALE
0 15 30 60 90
SCALE IN FEET
1" = 30'

N

SYM	ZONE		DATE	APPROVED

REVISIONS

JONES EDMUNDS
730 NE WALDO ROAD, GAINESVILLE, FLORIDA 32641 / (352) 377-5821
3910 S WASHINGTON AVE, SUITE 210, TITUSVILLE, FLORIDA 32780 / (321) 269-2950

SIGNATURES	DATE
DRAWN	
P. UPSTILL	12.18.13
CHECKED	
M. O'BRIEN	12.18.13
SUBMITTED, ARCHIVIST OF RECORD	
W. NICKEL	12/18/13
ST of LICENSURE: FL	
LICENSE NO. 58638	
APPROVED	
K. MILLER	12/18/13
K. MILLER	12/19/13

NATIONAL AERONAUTICS AND SPACE ADMINISTRATION
JOHN F. KENNEDY SPACE CENTER, NASA
KENNEDY SPACE CENTER, FLORIDA

KSC CENTRAL CAMPUS
REPLACEMENT HEADQUARTERS BUILDING
PHASE 1
VOL. 1 OF 4

EXISTING CONDITIONS PLAN

C102

FILE NO.	SIZE	DWG. NO.
C-12070.00	F	79K39622 VOL 1
PCN. NO. 98745.1a		SHEET 22

KSC FORM 1-11 (3/76)(C/G 3/94)

FILE: \\Jacksonville\projects\28500 Hurston Library\041-02 Central Campus Rep\Civil Construct Drawings\Civil\28500X041X02102.dwg PRINTED: 12/19/2013 8:11 AM, BY USER: paustill

NOTICE: When Government drawings, specifications, or other data are used for any purpose other than in connection with a definitely related Government procurement operation, the United States Government thereby incurs no responsibility nor obligation whatsoever; and the fact that the Government may have formulated, furnished, or in any way supplied the said drawings, specifications or other data is not to be regarded by implication or otherwise as in any manner licensing the holder or any other person or corporation, or conveying any rights or permission to manufacture, use, or sell any patented invention that may in any way be related thereto.

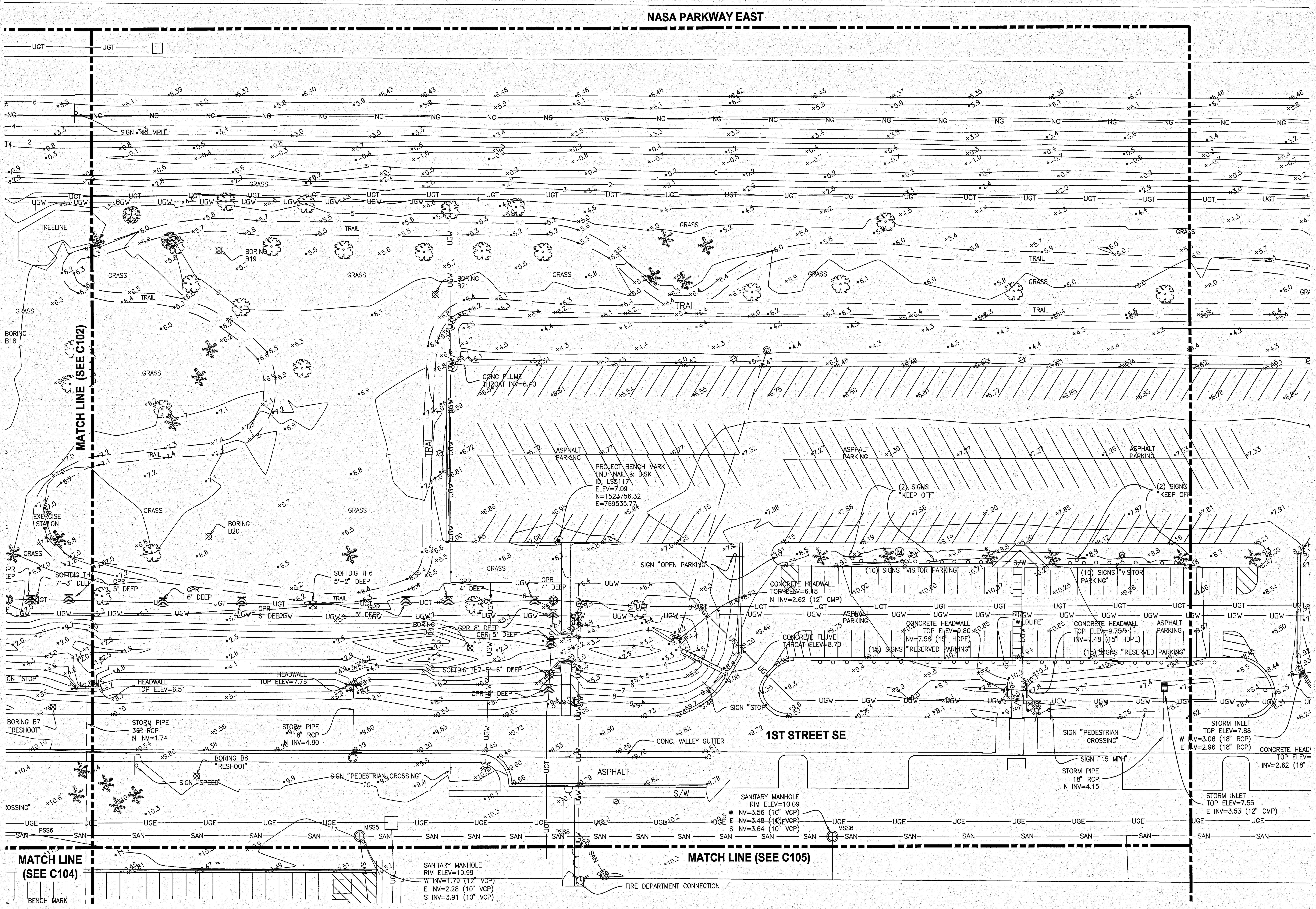

GRAPHIC SCALE

0 15 30 60 90

SCALE IN FEET
1" = 30'

N

SYM	ZONE	REVISIONS	DATE	APPROVED

JONES EDMUNDS
730 NE WALDO ROAD, GAINESVILLE, FLORIDA 32641 / (352) 377-5821
3910 S WASHINGTON AVE, SUITE 210, TITUSVILLE, FLORIDA 32780 / (321) 269-2950

SIGNATURES	DATE
DRAWN P. UPSTILL	12.18.13
CHECKED M. O'BRIEN	12.18.13
SUBMITTED: ARCH/ENG OF RECORD W. NICKEL	12/18/13
ST of LICENSURE: FL LICENSE NO: 68638	
APPROVED R. KOLLER	12/18/13
K. MILLER	12/19/13

NATIONAL AERONAUTICS AND SPACE ADMINISTRATION
JOHN F. KENNEDY SPACE CENTER, NASA
KENNEDY SPACE CENTER, FLORIDA

KSC CENTRAL CAMPUS
REPLACEMENT HEADQUARTERS BUILDING
PHASE 1
VOL. 1 OF 4

EXISTING CONDITIONS PLAN

C103

FILE NO. C-12070.00 | SIZE F | DWG. NO. 79K39622 VOL 1

PCN. NO. 98745.1a | SHEET 23

NOTICE: When Government drawings, specifications, or other data are used for any purpose other than in connection with a definitely related Government procurement operation, the United States Government thereby incurs no responsibility nor obligation whatsoever; and the fact that the Government may have formulated, furnished, or in any way supplied the said drawings, specifications or other data is not to be regarded by implication or otherwise as in any manner licensing the holder or any other person or corporation, or conveying any rights or permission to manufacture, use, or sell any patented invention that may in any way be related thereto.

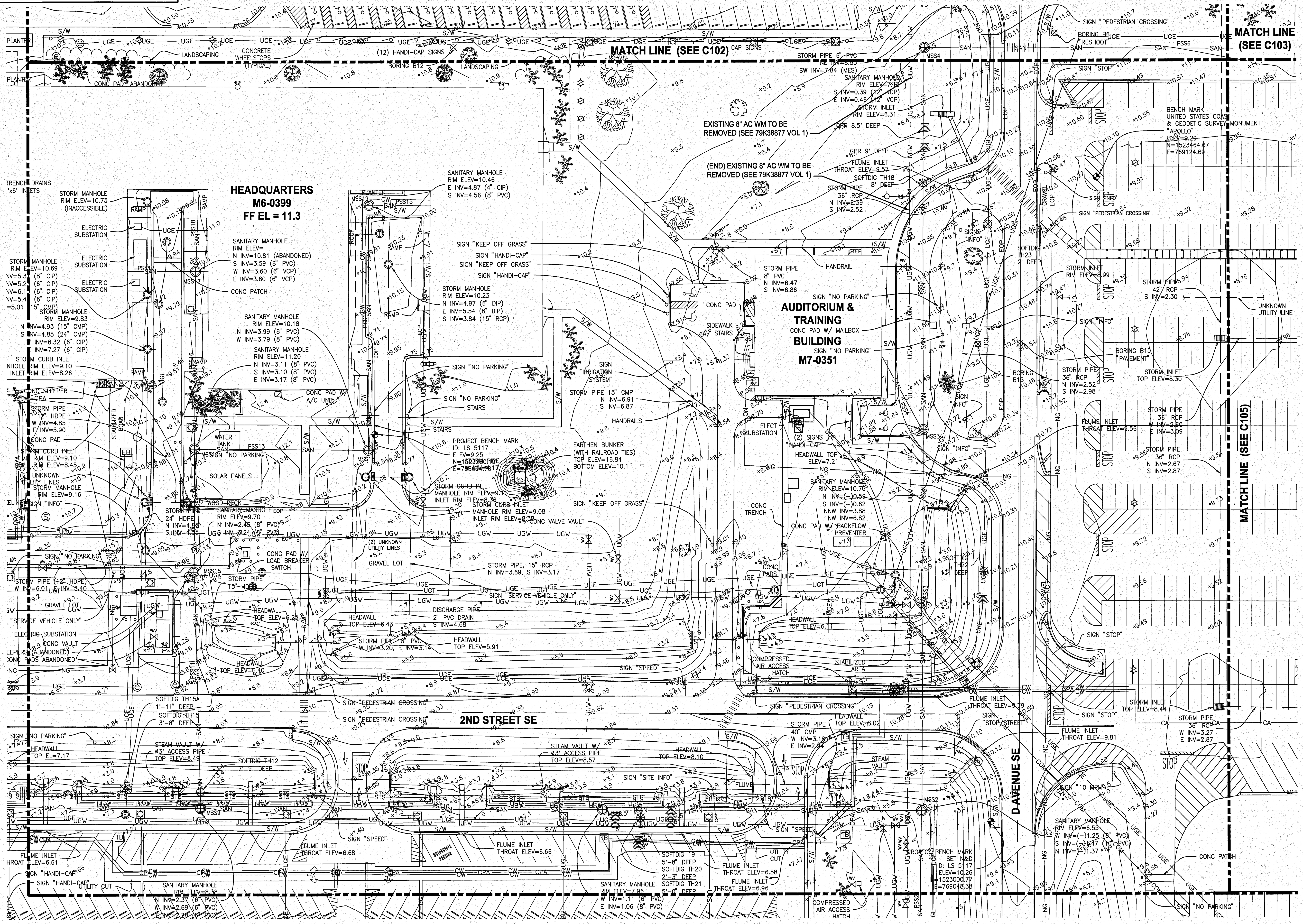

GRAPHIC SCALE

0 15 30 60 90

SCALE IN FEET
1" = 30'

N

SYM	ZONE	REVISIONS	DATE	APPROVED

JONES EDMUNDS

730 NE WALDO ROAD, GAINESVILLE, FLORIDA 32641 / (352) 377-5821
3910 S WASHINGTON AVE, SUITE 210, TITUSVILLE, FLORIDA 32780 / (321) 269-2950

SIGNATURES	DATE
DRAWN P. UPSTILL	12.18.13
CHECKED M. O'BRIEN	12.18.13
SUBMITTED ENGINEER OF RECORD W. NICKEL	12/18/13
ST of LICENSURE: FL	
LICENSE NO. 68638	
APPROVED	12/18/13
K. MILLER	12/19/13

NATIONAL AERONAUTICS AND SPACE ADMINISTRATION
JOHN F. KENNEDY SPACE CENTER, NASA
KENNEDY SPACE CENTER, FLORIDA

KSC CENTRAL CAMPUS
REPLACEMENT HEADQUARTERS BUILDING
PHASE 1
VOL. 1 OF 4

EXISTING CONDITIONS PLAN

C104

FILE NO.	SIZE	DWG. NO.
C-12070.00	F	79K39622 VOL 1

PCN. NO. 98745.1a

SHEET 24

KSC FORM 1-11 (3/76)(C/G 3/94)

NOTICE: When Government drawings, specifications, or other data are used for any purpose other than in connection with a definitely related Government procurement operation, the United States Government thereby incurs no responsibility nor obligation whatsoever; and the fact that the Government may have formulated, furnished, or in any way supplied the said drawings, specifications or other data is not to be regarded by implication or otherwise as in any manner licensing the holder or any other person or corporation, or conveying any rights or permission to manufacture, use, or sell any patented invention that may in any way be related thereto.

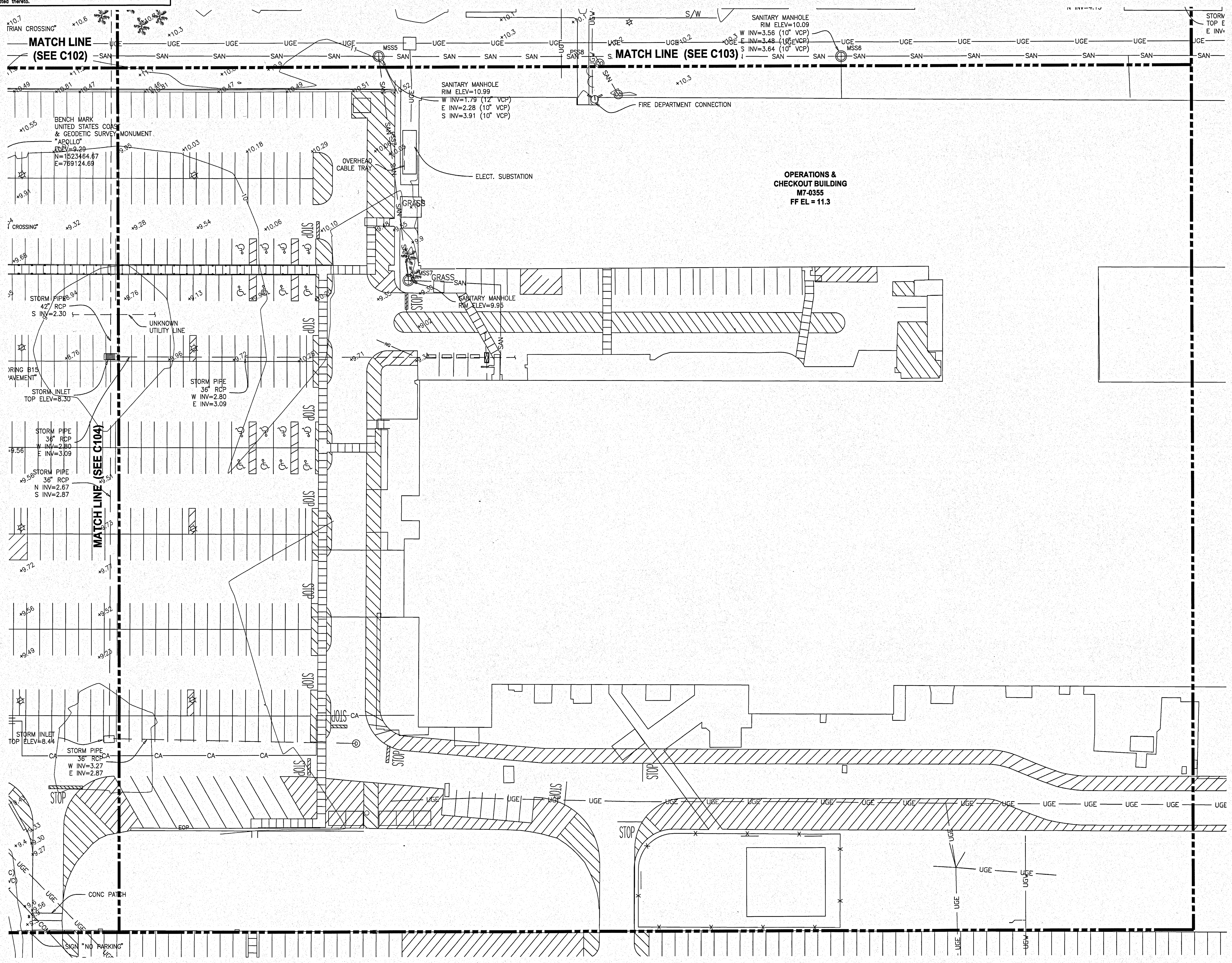

GRAPHIC SCALE

0 15 30 60 90

SCALE IN FEET
1" = 30'

N

SYM	ZONE		DATE	APPROVED

REVISIONS

JONES EDMUNDS
730 NE WALDO ROAD, GAINESVILLE, FLORIDA 32641 / (352) 377-5821
3910 S WASHINGTON AVE, SUITE 210, TITUSVILLE, FLORIDA 32780 / (321) 269-2950

SIGNATURES	DATE
DRAWN P. UPSTILL	12.18.13
CHECKED M. O'BRIEN	12.18.13
SUBMITTED: ARCH/ENG OF RECORD W. NICKEL	12/18/13
ST of LICENSURE: FL LICENSE NO: 68638	
APPROVED R. KOLLER	12/18/13
K. MILLER	12/18/13

NATIONAL AERONAUTICS AND SPACE ADMINISTRATION
JOHN F. KENNEDY SPACE CENTER, NASA
KENNEDY SPACE CENTER, FLORIDA

KSC CENTRAL CAMPUS
REPLACEMENT HEADQUARTERS BUILDING
PHASE 1
VOL. 1 OF 4

EXISTING CONDITIONS PLAN

C105

FILE NO.	SIZE	DWG. NO.
C-12070.00	F	79K39622 VOL 1

PCN. NO. 98745.1a | SHEET 25

KSC FORM 1-11 (3/76)(C/G 3/94)

NOTICE: When Government drawings, specifications, or other data are used for any purpose other than in connection with a definitely related Government procurement operation, the United States Government thereby incurs no responsibility nor obligation whatsoever; and the fact that the Government may have formulated, furnished, or in any way supplied the said drawings, specifications or other data is not to be regarded by implication or otherwise as in any manner licensing the holder or any other person or corporation, or conveying any rights or permission to manufacture, use, or sell any patented invention that may in any way be related thereto.

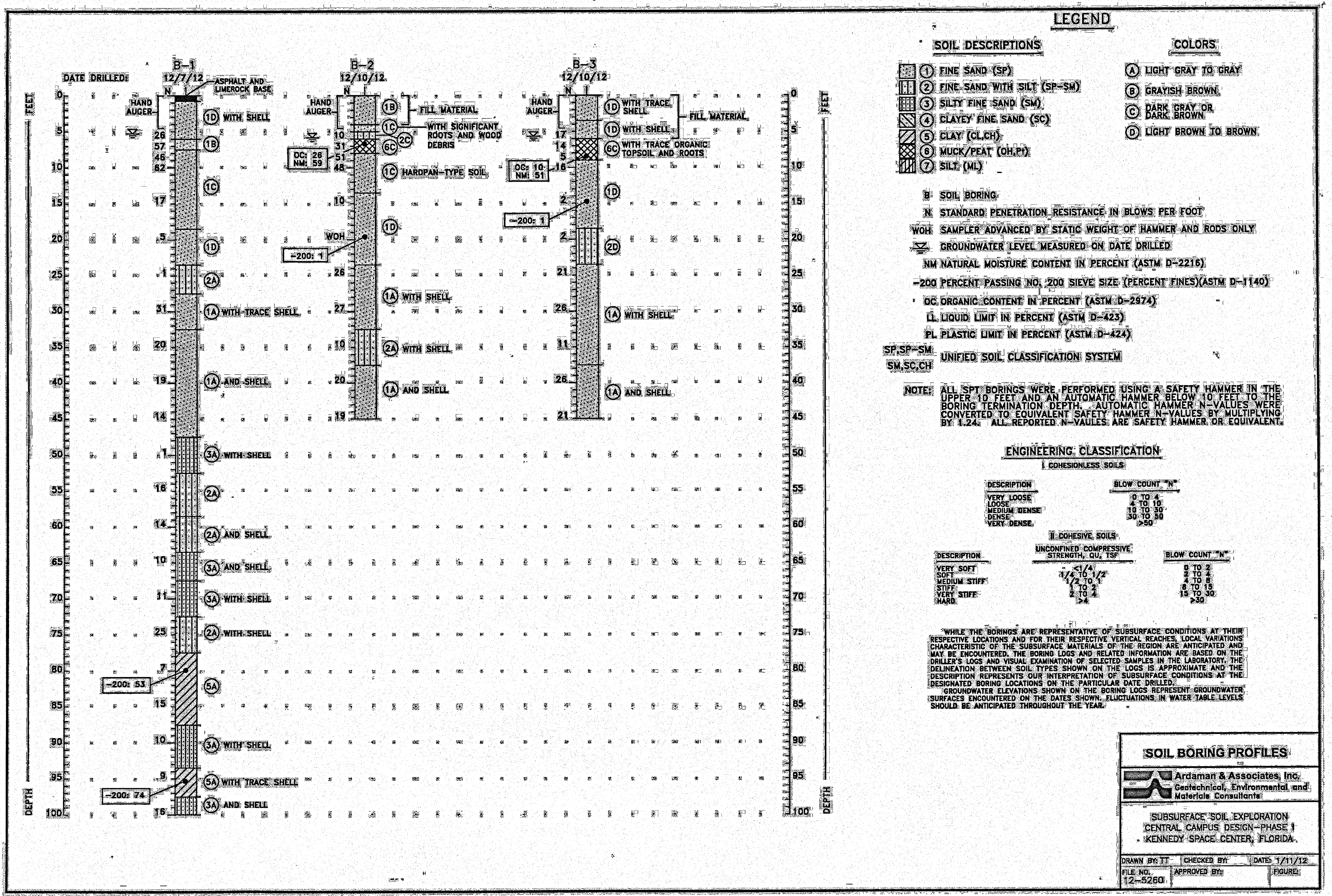

NOTES:

A. THE FOLLOWING INFORMATION WAS OBTAINED FROM THE "SUBSURFACE SOIL EXPLORATION AND GEOTECHNICAL ENGINEERING EVALUATION KSC CENTRAL CAMPUS DESIGN – PHASE I KENNEDY SPACE CENTER, FLORIDA" PREPARED BY ARDAMAN & ASSOCIATES, INC., JANUARY 25, 2013.

B. GROUNDWATER LEVEL
THE GROUNDWATER LEVEL WAS MEASURED IN THE BOREHOLES ON THE DAY DRILLED AFTER STABILIZATION OF THE DOWNHOLE WATER LEVEL. AS SHOWN ON THE SOIL BORING PROFILES IN APPENDIX II, GROUNDWATER WAS ENCOUNTERED AT DEPTHS THAT RANGE FROM 3.6 TO 6 FEET BELOW THE EXISTING GROUND SURFACE ON THE DATES INDICATED. FLUCTUATIONS IN GROUNDWATER LEVELS SHOULD BE ANTICIPATED THROUGHOUT THE YEAR PRIMARILY DUE TO SEASONAL VARIATIONS IN RAINFALL AND OTHER FACTORS THAT MAY VARY FROM THE TIME THE BORINGS WERE CONDUCTED.

C. NORMAL SEASONAL HIGH GROUNDWATER LEVEL
THE NORMAL SEASONAL HIGH GROUNDWATER LEVEL EACH YEAR IS THE LEVEL IN THE AUGUST-SEPTEMBER PERIOD AT THE END OF THE RAINY SEASON DURING A YEAR OF NORMAL (AVERAGE) RAINFALL. THE WATER TABLE ELEVATIONS ASSOCIATED WITH A HIGHER THAN NORMAL RAINFALL AND IN THE EXTREME CASE, FLOOD, WOULD BE HIGHER TO MUCH HIGHER THAN THE NORMAL SEASONAL HIGH GROUNDWATER LEVEL. THE NORMAL HIGH WATER LEVELS WOULD MORE APPROXIMATE THE NORMAL SEASONAL HIGH GROUNDWATER LEVELS.

D. THE SEASONAL HIGH GROUNDWATER LEVEL IS AFFECTED BY THE NUMBER OF FACTORS. THE DRAINAGE CHARACTERISTICS OF THE SOILS, THE LAND SURFACE ELEVATION, RELIEF POINTS SUCH AS DRAINAGE DITCHES, LAKES, RIVERS, SWAMP AREAS, ETC., AND THE DISTANCE TO RELIEF POINTS ARE SOME OF THE MORE IMPORTANT FACTORS INFLUENCING THE SEASONAL HIGH GROUNDWATER LEVEL.

E. IN ADDITION TO EVALUATING THE CONDITIONS ABOVE, WE HAVE REVIEWED ANNUAL PRECIPITATION DATA AVAILABLE FROM THE MELBOURNE OFFICE OF THE NATIONAL WEATHER SERVICE. BASED ON THIS DATA, THE RAINFALL TO DATE IN BREVARD COUNTY UPON COMPLETION OF THE FILED EXPLORATION PROGRAM IS APPROXIMATELY 39.4 INCHES, WHICH IS APPROXIMATELY 11.2 INCHES BELOW NORMAL FOR THIS TIME OF YEAR.

F. BASED ON OUR INTERPRETATION OF THE SITE CONDITIONS USING OUR BORING LOGS, WE ESTIMATE THE NORMAL SEASONAL HIGH GROUNDWATER LEVEL AT THE BORING LOCATIONS TO BE APPROXIMATELY 2 FEET ABOVE THE GROUNDWATER LEVELS MEASURED AT THE TIME OF OUR FOELD EXPLORATION.

SYM	ZONE		DATE	APPROVED

REVISIONS

JONES EDMUNDS
730 NE WALDO ROAD, GAINESVILLE, FLORIDA 32641 / (352) 377-5821
3910 S WASHINGTON AVE, SUITE 210, TITUSVILLE, FLORIDA 32780 / (321) 269-2950

SIGNATURES	DATE
DRAWN P. UPSTILL	12.18.13
CHECKED M. O'BRIEN	12.18.13
SUBMITTED: ARCH/ENG OF RECORD W. NICKEL	12/18/13
ST of LICENSURE: FL LICENSE NO: 68638	
APPROVED R. KOLLER	12/18/13
K. MILLER	12/19/13

C106

NATIONAL AERONAUTICS AND SPACE ADMINISTRATION
JOHN F. KENNEDY SPACE CENTER, NASA
KENNEDY SPACE CENTER, FLORIDA

KSC CENTRAL CAMPUS
REPLACEMENT HEADQUARTERS BUILDING
PHASE 1
VOL. 1 OF 4

SOIL BORING PROFILES

FILE NO.	SIZE	DWG. NO.
C-12070.00	F	79K39622 VOL 1

PCN. NO. 98745.1a

SHEET 26

NOTICE: When Government drawings, specifications, or other data are used for any purpose other than in connection with a definitely related Government procurement operation, the United States Government thereby incurs no responsibility nor obligation whatsoever; and the fact that the Government may have formulated, furnished, or in any way supplied the said drawings, specifications or other data is not to be regarded by implication or otherwise as in any manner licensing the holder or any other person or corporation, or conveying any rights or permission to manufacture, use, or sell any patented invention that may in any way be related thereto.

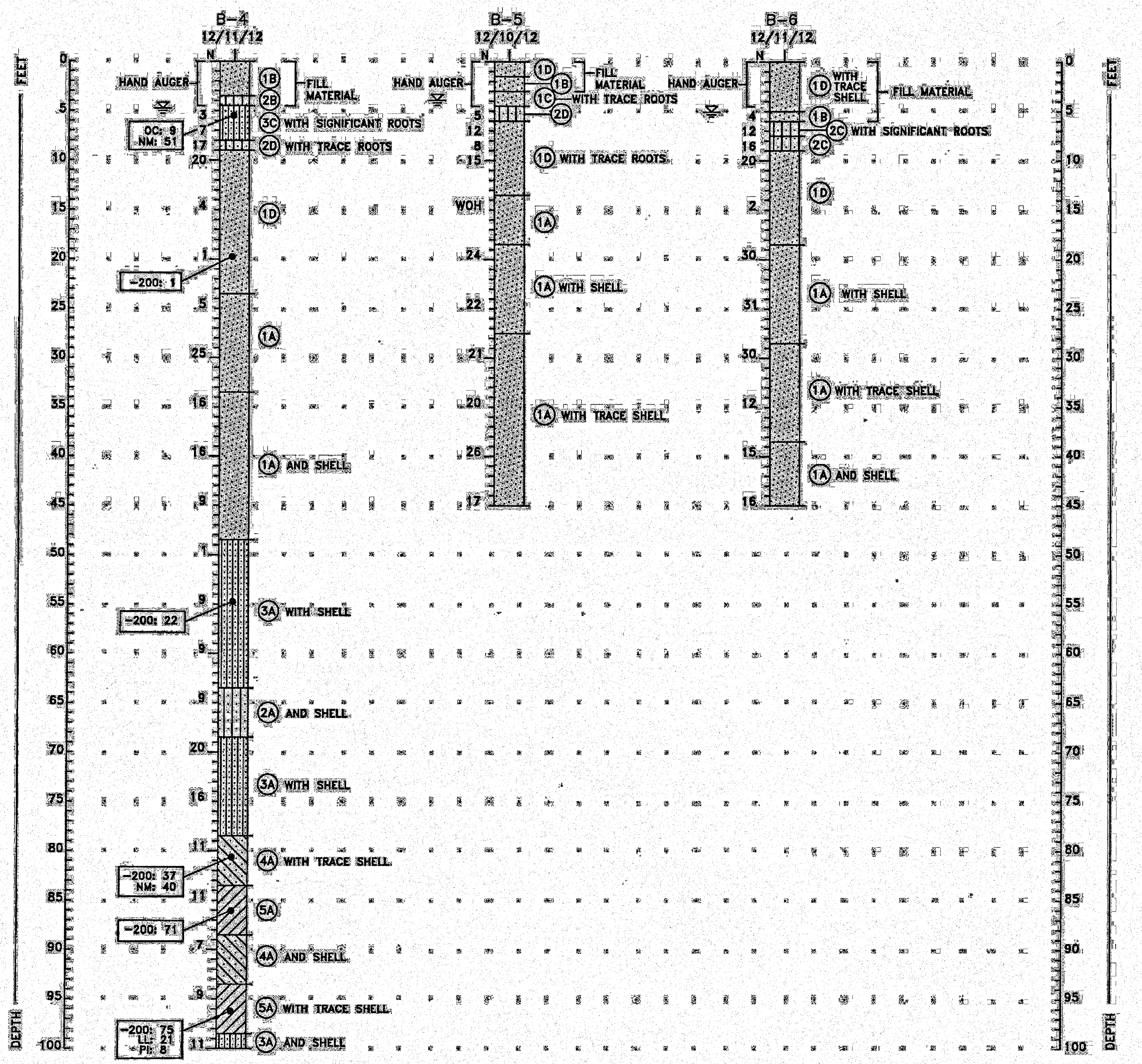

LEGEND

SOIL DESCRIPTIONS

1. FINE SAND (SP)
2. FINE SAND WITH SILT (SP-SM)
3. SILTY FINE SAND (SM)
4. CLAYEY FINE SAND (SC)
5. CLAY (CL,CH)
6. MUCK/PEAT (OH,Pt)
7. SILT (ML)

COLORS

- (A) LIGHT GRAY TO GRAY
- (B) GRAYISH BROWN
- (C) DARK GRAY OR DARK BROWN
- (D) LIGHT BROWN TO BROWN

B	SOIL BORING
N	STANDARD PENETRATION RESISTANCE IN BLOWS PER FOOT
WOH	SAMPLER ADVANCED BY STATIC WEIGHT OF HAMMER AND RODS ONLY
▽	GROUNDWATER LEVEL MEASURED ON DATE DRILLED
NM	NATURAL MOISTURE CONTENT IN PERCENT (ASTM D-2216)
-200	PERCENT PASSING NO. 200 SIEVE SIZE (PERCENT FINES)(ASTM D-1140)
OC	ORGANIC CONTENT IN PERCENT (ASTM D-2974)
LL	LIQUID LIMIT IN PERCENT (ASTM D-423)
PL	PLASTIC LIMIT IN PERCENT (ASTM D-424)
SP,SP-SM SM,SC,CH	UNIFIED SOIL CLASSIFICATION SYSTEM

NOTE: ALL SPT BORINGS WERE PERFORMED USING A SAFETY HAMMER IN THE UPPER 10 FEET AND AN AUTOMATIC HAMMER BELOW 10 FEET TO THE BORING TERMINATION DEPTH. AUTOMATIC HAMMER N-VALUES WERE CONVERTED TO EQUIVALENT SAFETY HAMMER N-VALUES BY MULTIPLYING BY 1.24. ALL REPORTED N-VAULES ARE SAFETY HAMMER OR EQUIVALENT.

ENGINEERING CLASSIFICATION

I. COHESIONLESS SOILS

DESCRIPTION	BLOW COUNT "N"
VERY LOOSE	0 TO 4
LOOSE	4 TO 10
MEDIUM DENSE	10 TO 30
DENSE	30 TO 50
VERY DENSE	>50

II. COHESIVE SOILS

DESCRIPTION	UNCONFINED COMPRESSIVE STRENGTH, QU, TSF	BLOW COUNT "N"
VERY SOFT	<1/4	0 TO 2
SOFT	1/4 TO 1/2	2 TO 4
MEDIUM STIFF	1/2 TO 1	4 TO 8
STIFF	1 TO 2	8 TO 15
VERY STIFF	2 TO 4	15 TO 30
HARD	>4	>30

WHILE THE BORINGS ARE REPRESENTATIVE OF SUBSURFACE CONDITIONS AT THEIR RESPECTIVE LOCATIONS AND FOR THEIR RESPECTIVE VERTICAL REACHES, LOCAL VARIATIONS CHARACTERISTIC OF THE SUBSURFACE MATERIALS OF THE REGION ARE ANTICIPATED AND MAY BE ENCOUNTERED. THE BORING LOGS AND RELATED INFORMATION ARE BASED ON THE DRILLER'S LOGS AND VISUAL EXAMINATION OF SELECTED SAMPLES IN THE LABORATORY. THE DELINEATION BETWEEN SOIL TYPES SHOWN ON THE LOGS IS APPROXIMATE AND THE DESCRIPTION REPRESENTS OUR INTERPRETATION OF SUBSURFACE CONDITIONS AT THE DESIGNATED BORING LOCATIONS ON THE PARTICULAR DATE DRILLED.

GROUNDWATER ELEVATIONS SHOWN ON THE BORING LOGS REPRESENT GROUNDWATER SURFACES ENCOUNTERED ON THE DATES SHOWN. FLUCTUATIONS IN WATER TABLE LEVELS SHOULD BE ANTICIPATED THROUGHOUT THE YEAR.

SOIL BORING PROFILES

Ardaman & Associates, Inc.
Geotechnical, Environmental and Materials Consultants

SUBSURFACE SOIL EXPLORATION
CENTRAL CAMPUS DESIGN-PHASE I
KENNEDY SPACE CENTER, FLORIDA

DRAWN BY: TT | CHECKED BY: | DATE: 1/11/13
FILE NO. 12-5260 | APPROVED BY: | FIGURE:

SYM	ZONE	REVISIONS	DATE	APPROVED

JONES EDMUNDS
730 NE WALDO ROAD, GAINESVILLE, FLORIDA 32641 / (352) 377-5821
3910 S WASHINGTON AVE, SUITE 210, TITUSVILLE, FLORIDA 32780 / (321) 269-2950

SIGNATURES	DATE
DRAWN P. UPSTILL	12.18.13
CHECKED M. O'BRIEN	12.18.13
SUBMITTED: ARCH/ENG OF RECORD W. NICKEL	12/18/13
ST of LICENSURE: FL LICENSE NO. 68638	
APPROVED R. KOLLER	12/18/13
K. MILLER	12/19/13

NATIONAL AERONAUTICS AND SPACE ADMINISTRATION
JOHN F. KENNEDY SPACE CENTER, NASA
KENNEDY SPACE CENTER, FLORIDA

KSC CENTRAL CAMPUS
REPLACEMENT HEADQUARTERS BUILDING
PHASE 1
VOL. 1 OF 4

SOIL BORING PROFILES

C107

FILE NO. C-12070.00 | SIZE F | DWG. NO. 79K39622 VOL 1
PCN. NO. 98745.1a | SHEET 27

NOTICE: When Government drawings, specifications, or other data are used for any purpose other than in connection with a definitely related Government procurement operation, the United States Government thereby incurs no responsibility nor obligation whatsoever; and the fact that the Government may have formulated, furnished, or in any way supplied the said drawings, specifications or other data is not to be regarded by implication or otherwise as in any manner licensing the holder or any other person or corporation, or conveying any rights or permission to manufacture, use, or sell any patented invention that may in any way be related thereto.

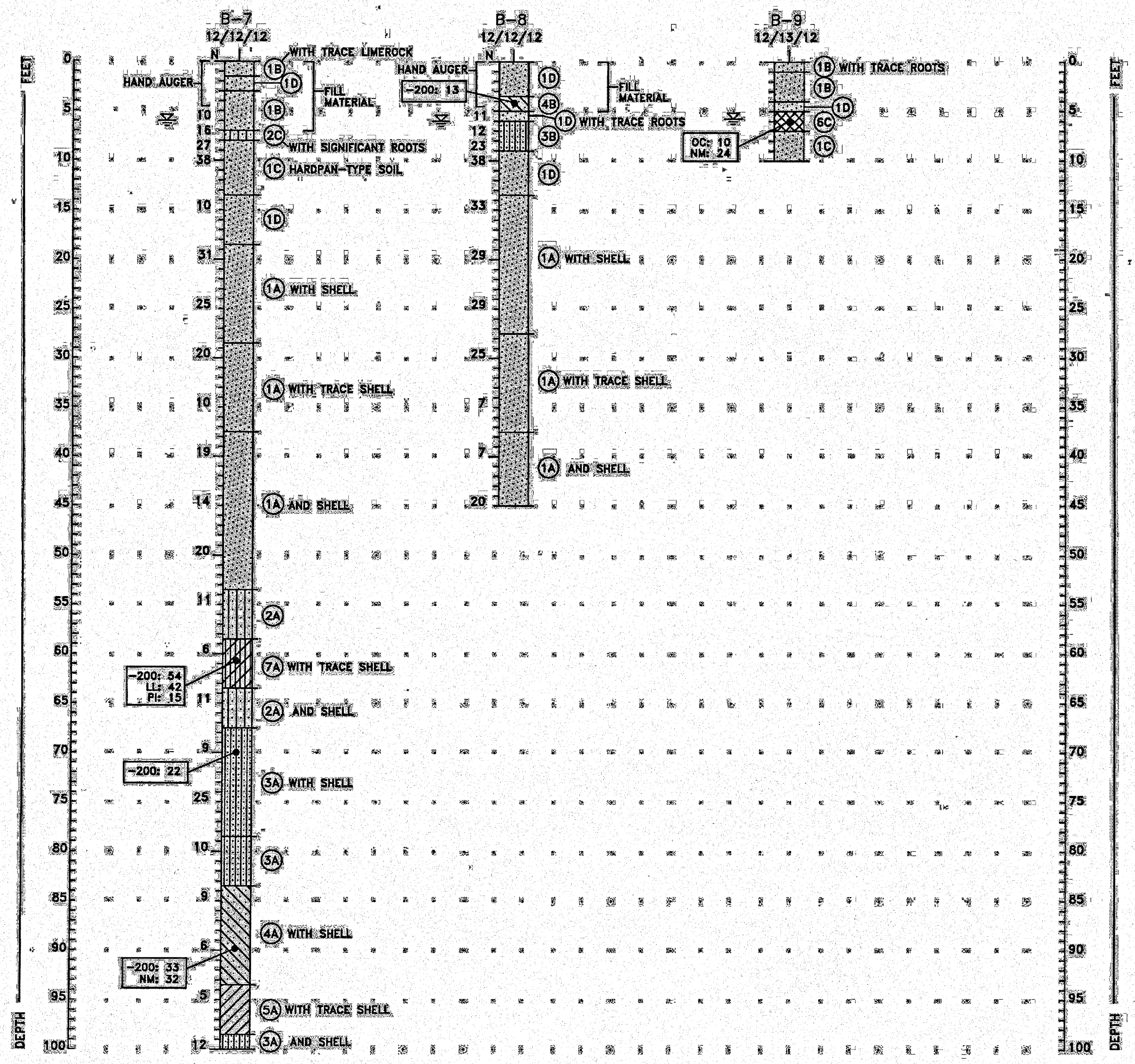

LEGEND

SOIL DESCRIPTIONS

1. FINE SAND (SP)
2. FINE SAND WITH SILT (SP-SM)
3. SILTY FINE SAND (SM)
4. CLAYEY FINE SAND (SC)
5. CLAY (CL,CH)
6. MUCK/PEAT (OH,Pt)
7. SILT (ML)

COLORS

- (A) LIGHT GRAY TO GRAY
- (B) GRAYISH BROWN
- (C) DARK GRAY OR DARK BROWN
- (D) LIGHT BROWN TO BROWN

B SOIL BORING

N STANDARD PENETRATION RESISTANCE IN BLOWS PER FOOT

WOH SAMPLER ADVANCED BY STATIC WEIGHT OF HAMMER AND RODS ONLY

(groundwater symbol) GROUNDWATER LEVEL MEASURED ON DATE DRILLED

NM NATURAL MOISTURE CONTENT IN PERCENT (ASTM D-2216)

-200 PERCENT PASSING NO. 200 SIEVE SIZE (PERCENT FINES)(ASTM D-1140)

OC ORGANIC CONTENT IN PERCENT (ASTM D-2974)

LL LIQUID LIMIT IN PERCENT (ASTM D-423)

PL PLASTIC LIMIT IN PERCENT (ASTM D-424)

SP,SP-SM SM,SC,CH UNIFIED SOIL CLASSIFICATION SYSTEM.

NOTE: ALL SPT BORINGS WERE PERFORMED USING A SAFETY HAMMER IN THE UPPER 10 FEET AND AN AUTOMATIC HAMMER BELOW 10 FEET TO THE BORING TERMINATION DEPTH. AUTOMATIC HAMMER N-VALUES WERE CONVERTED TO EQUIVALENT SAFETY HAMMER N-VALUES BY MULTIPLYING BY 1.24. ALL REPORTED N-VAULES ARE SAFETY HAMMER OR EQUIVALENT.

ENGINEERING CLASSIFICATION

I. COHESIONLESS SOILS

DESCRIPTION	BLOW COUNT "N"
VERY LOOSE	0 TO 4
LOOSE	4 TO 10
MEDIUM DENSE	10 TO 30
DENSE	30 TO 50
VERY DENSE	>50

II. COHESIVE SOILS

DESCRIPTION	UNCONFINED COMPRESSIVE STRENGTH, QU, TSF	BLOW COUNT "N"
VERY SOFT	<1/4	0 TO 2
SOFT	1/4 TO 1/2	2 TO 4
MEDIUM STIFF	1/2 TO 1	4 TO 8
STIFF	1 TO 2	8 TO 15
VERY STIFF	2 TO 4	15 TO 30
HARD	>4	>30

WHILE THE BORINGS ARE REPRESENTATIVE OF SUBSURFACE CONDITIONS AT THEIR RESPECTIVE LOCATIONS AND FOR THEIR RESPECTIVE VERTICAL REACHES, LOCAL VARIATIONS CHARACTERISTIC OF THE SUBSURFACE MATERIALS OF THE REGION ARE ANTICIPATED AND MAY BE ENCOUNTERED. THE BORING LOGS AND RELATED INFORMATION ARE BASED ON THE DRILLER'S LOGS AND VISUAL EXAMINATION OF SELECTED SAMPLES IN THE LABORATORY. THE DELINEATION BETWEEN SOIL TYPES SHOWN ON THE LOGS IS APPROXIMATE AND THE DESCRIPTION REPRESENTS OUR INTERPRETATION OF SUBSURFACE CONDITIONS AT THE DESIGNATED BORING LOCATIONS ON THE PARTICULAR DATE DRILLED.

GROUNDWATER ELEVATIONS SHOWN ON THE BORING LOGS REPRESENT GROUNDWATER SURFACES ENCOUNTERED ON THE DATES SHOWN. FLUCTUATIONS IN WATER TABLE LEVELS SHOULD BE ANTICIPATED THROUGHOUT THE YEAR.

SOIL BORING PROFILES

Ardaman & Associates, Inc.
Geotechnical, Environmental and Materials Consultants

SUBSURFACE SOIL EXPLORATION
CENTRAL CAMPUS DESIGN-PHASE I
KENNEDY SPACE CENTER, FLORIDA

DRAWN BY: TT	CHECKED BY:	DATE: 12/18/12
FILE NO. 12-5260	APPROVED BY:	FIGURE:

SYM	ZONE	REVISIONS	DATE	APPROVED

JONES EDMUNDS
730 NE WALDO ROAD, GAINESVILLE, FLORIDA 32641 / (352) 377-5821
3910 S WASHINGTON AVE, SUITE 210, TITUSVILLE, FLORIDA 32780 / (321) 269-2950

SIGNATURES	DATE
DRAWN P. UPSTILL	12.18.13
CHECKED M. O'BRIEN	12.18.13
SUBMITTED: ARCH/ENG OF RECORD W. NICKEL	12/18/13
ST of LICENSURE: FL LICENSE NO: 68638	
APPROVED R. KOLLER	12/18/13
K. MILLER	12/19/13

NATIONAL AERONAUTICS AND SPACE ADMINISTRATION
JOHN F. KENNEDY SPACE CENTER, NASA
KENNEDY SPACE CENTER, FLORIDA

KSC CENTRAL CAMPUS
REPLACEMENT HEADQUARTERS BUILDING
PHASE 1
VOL. 1 OF 4

SOIL BORING PROFILES

FILE NO. C-12070.00 | SIZE F | DWG. NO. 79K39622 VOL 1

PCN. NO. 98745.1a

C108

KSC FORM 1-11 (3/76)(C/G 3/94)

NOTICE: When Government drawings, specifications, or other data are used for any purpose other than in connection with a definitely related Government procurement operation, the United States Government thereby incurs no responsibility nor obligation whatsoever; and the fact that the Government may have formulated, furnished, or in any way supplied the said drawings, specifications or other data is not to be regarded by implication or otherwise as in any manner licensing the holder or any other person or corporation, or conveying any rights or permission to manufacture, use, or sell any patented invention that may in any way be related thereto.

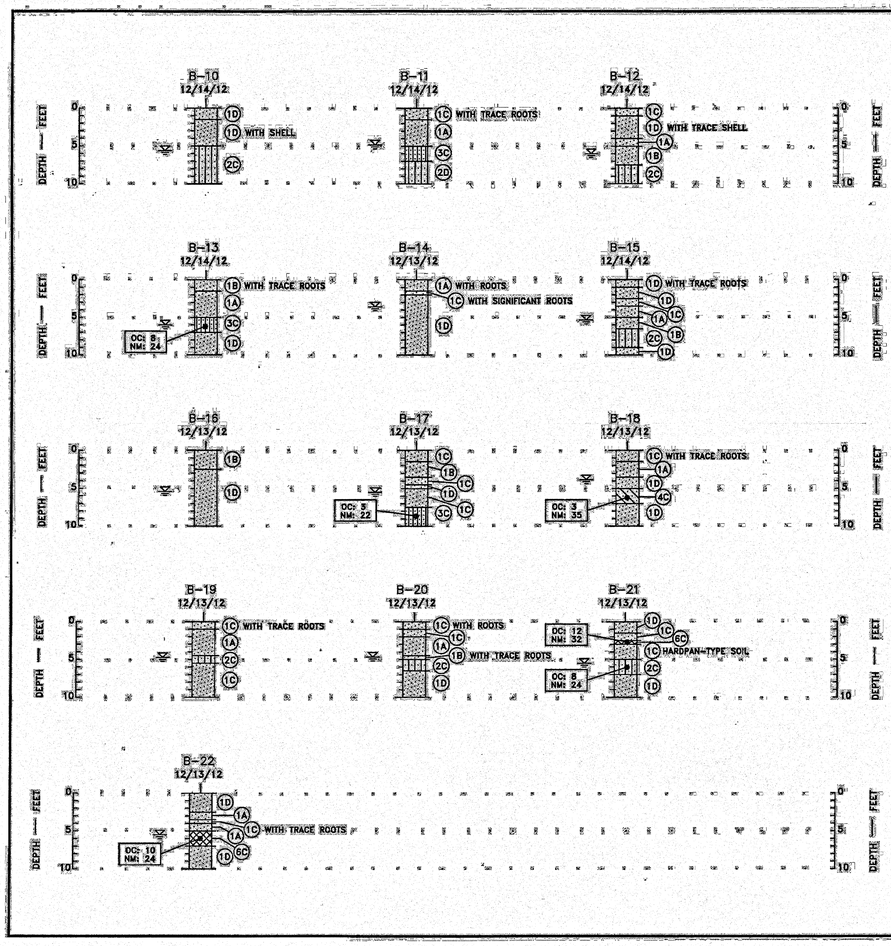

LEGEND

SOIL DESCRIPTIONS

1. FINE SAND (SP)
2. FINE SAND WITH SILT (SP-SM)
3. SILTY FINE SAND (SM)
4. CLAYEY FINE SAND (SC)
5. CLAY (CL,CH)
6. MUCK/PEAT (OH,PT)
7. SILT (ML)

COLORS

- A LIGHT GRAY TO GRAY
- B GRAYISH BROWN
- C DARK GRAY OR DARK BROWN
- D LIGHT BROWN TO BROWN

B SOIL BORING

N STANDARD PENETRATION RESISTANCE IN BLOWS PER FOOT

WOH SAMPLER ADVANCED BY STATIC WEIGHT OF HAMMER AND RODS ONLY

GROUNDWATER LEVEL MEASURED ON DATE DRILLED

NM NATURAL MOISTURE CONTENT IN PERCENT (ASTM D-2216)

-200 PERCENT PASSING NO. 200 SIEVE SIZE (PERCENT FINES)(ASTM D-1140)

OC ORGANIC CONTENT IN PERCENT (ASTM D-2974)

LL LIQUID LIMIT IN PERCENT (ASTM D-423)

PL PLASTIC LIMIT IN PERCENT (ASTM D-424)

SP,SP-SM, SM,SC,CH UNIFIED SOIL CLASSIFICATION SYSTEM

NOTE: ALL SPT BORINGS WERE PERFORMED USING A SAFETY HAMMER IN THE UPPER 10 FEET AND AN AUTOMATIC HAMMER BELOW 10 FEET TO THE BORING TERMINATION DEPTH. AUTOMATIC HAMMER N-VALUES WERE CONVERTED TO EQUIVALENT SAFETY HAMMER N-VALUES BY MULTIPLYING BY 1.24. ALL REPORTED N-VAULES ARE SAFETY HAMMER OR EQUIVALENT.

ENGINEERING CLASSIFICATION

I COHESIONLESS SOILS

DESCRIPTION	BLOW COUNT "N"
VERY LOOSE	0 TO 4
LOOSE	4 TO 10
MEDIUM DENSE	10 TO 30
DENSE	30 TO 50
VERY DENSE	>50

II COHESIVE SOILS

DESCRIPTION	UNCONFINED COMPRESSIVE STRENGTH, QU, TSF	BLOW COUNT "N"
VERY SOFT	<1/4	0 TO 2
SOFT	1/4 TO 1/2	2 TO 4
MEDIUM STIFF	1/2 TO 1	4 TO 8
STIFF	1 TO 2	8 TO 15
VERY STIFF	2 TO 4	15 TO 30
HARD	>4	>30

WHILE THE BORINGS ARE REPRESENTATIVE OF SUBSURFACE CONDITIONS AT THEIR RESPECTIVE LOCATIONS AND FOR THEIR RESPECTIVE VERTICAL REACHES, LOCAL VARIATIONS CHARACTERISTIC OF THE SUBSURFACE MATERIALS OF THE REGION ARE ANTICIPATED AND MAY BE ENCOUNTERED. THE BORING LOGS AND RELATED INFORMATION ARE BASED ON THE DRILLER'S LOGS AND VISUAL EXAMINATION OF SELECTED SAMPLES IN THE LABORATORY. THE DELINEATION BETWEEN SOIL TYPES SHOWN ON THE LOGS IS APPROXIMATE AND THE DESCRIPTION REPRESENTS OUR INTERPRETATION OF SUBSURFACE CONDITIONS AT THE DESIGNATED BORING LOCATIONS ON THE PARTICULAR DATE DRILLED.

GROUNDWATER ELEVATIONS SHOWN ON THE BORING LOGS REPRESENT GROUNDWATER SURFACES ENCOUNTERED ON THE DATES SHOWN. FLUCTUATIONS IN WATER TABLE LEVELS SHOULD BE ANTICIPATED THROUGHOUT THE YEAR.

SOIL BORING PROFILES

Ardaman & Associates, Inc.
Geotechnical, Environmental and Materials Consultants

SUBSURFACE SOIL EXPLORATION
CENTRAL CAMPUS DESIGN-PHASE I
KENNEDY SPACE CENTER, FLORIDA

DRAWN BY: TT	CHECKED BY:	DATE: 12/18/12
FILE NO. 12-5260	APPROVED BY:	FIGURE:

SYM	ZONE	REVISIONS	DATE	APPROVED

JONES EDMUNDS
730 NE WALDO ROAD, GAINESVILLE, FLORIDA 32641 / (352) 377-5821
3910 S WASHINGTON AVE, SUITE 210, TITUSVILLE, FLORIDA 32780 / (321) 269-2950

SIGNATURES	DATE
DRAWN P. UPSTILL	12.18.13
CHECKED M. O'BRIEN	12.18.13
SUBMITTED: ARCHENG OF RECORD W. NICKEL	12/18/13
ST of LICENSURE: FL LICENSE NO. 68638	
APPROVED R. KOLLER	12/18/13
K. MILLER	12/17/13

NATIONAL AERONAUTICS AND SPACE ADMINISTRATION
JOHN F. KENNEDY SPACE CENTER, NASA
KENNEDY SPACE CENTER, FLORIDA

KSC CENTRAL CAMPUS
REPLACEMENT HEADQUARTERS BUILDING
PHASE 1
VOL. 1 OF 4

SOIL BORING PROFILES

FILE NO.	SIZE	DWG. NO.
C-12070.00	F	79K39622 VOL 1

PCN. NO. 98745.1a SHEET 29

C109

KSC FORM 1-11 (3/76)(C/G 3/94)

FILE: \\jecost\printing\USKAU Hanton Brady\Uol-Hz Central Campus HQ\UP1 Contract Drawings\Uol\USKAUU1U109.dwg PRINTED: 12/19/2013 8:13 AM, BY USJC road Upstill LAST MODIFIED: 11/13/2013 2:29 PM, BY USJC pupstill

NOTICE: When Government drawings, specifications, or other data are used for any purpose other than in connection with a definitely related Government procurement operation, the United States Government thereby incurs no responsibility nor obligation whatsoever; and the fact that the Government may have formulated, furnished, or in any way supplied the said drawings, specifications or other data is not to be regarded by implication or otherwise as in any manner licensing the holder or any other person or corporation, or conveying any rights or permission to manufacture, use, or sell any patented invention that may in any way be related thereto.

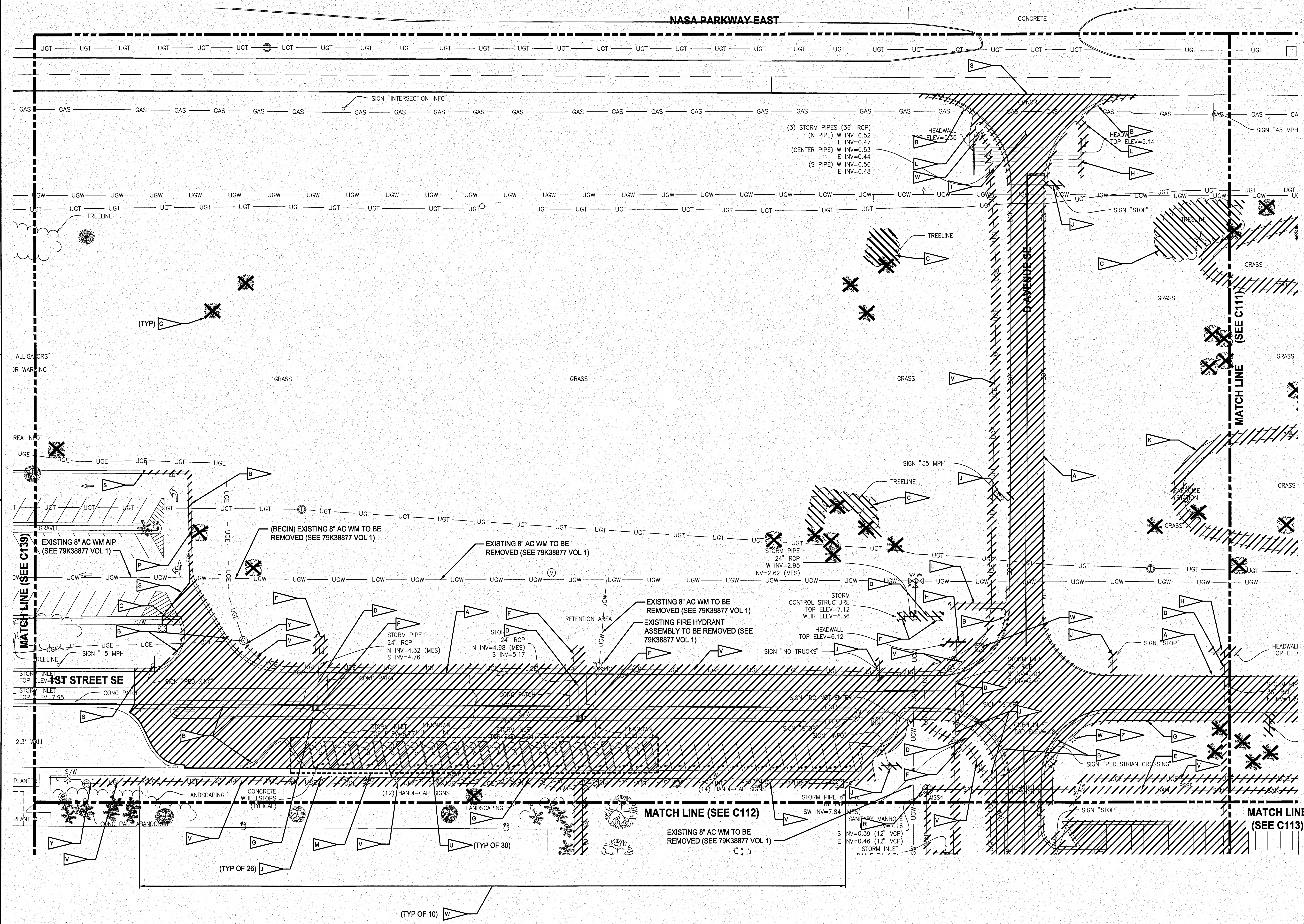

NOTES

- A: DEMOLISH EXISTING ASPHALT PAVEMENT
- B: DEMOLISH CURB AND GUTTER
- C: REMOVE TREES AND SHRUBS
- D: DEMOLISH CULVERT
- E: DEMOLISH SANITARY SEWER
- F: DEMOLISH DRAINAGE STRUCTURE
- G: DEMOLISH CONCRETE SIDEWALK
- H: DEMOLISH HEADWALL
- J: DEMOLISH SIGN
- K: DEMOLISH PATH, BACKFILL TO MATCH EXISTING GRADE AND SOD
- L: DEMOLISH CONCRETE FLUME
- M: RELOCATE 16 HANDICAP PARKING SPACES SOUTH OF HEADQUARTERS PRIOR TO START OF CONSTRUCTION. FOR LAYOUT SEE DETAIL 6/C203
- P: DEMOLISH BOLLARD
- R: DEMOLISH SANITARY SEWER MANHOLE
- S: SAW CUT EXISTING PAVEMENT/CURB
- T: DEMOLISH 370 SY CONCRETE PAVEMENT
- U: DEMOLISH CONCRETE WHEELSTOPS
- V: DEMOLISH UNDERGROUND ELECTRIC, MANHOLES, AND JUNCTIONS. COORDINATE WITH CONTRACTING OFFICER
- W: DEMOLISH LIGHT POLE
- Y: TERMINATE POWER AT JUNCTION. COORDINATE WITH CONTRACTING OFFICER
- Z: DEMOLISH UNDERGROUND ELECTRIC. POWER SOURCE UNKNOWN. COORDINATE WITH CONTRACTING OFFICER

GRAPHIC SCALE

0 15 30 60 90

SCALE IN FEET
1" = 30'

N

SYM	ZONE	REVISIONS	DATE	APPROVED

JONES EDMUNDS
730 NE WALDO ROAD, GAINESVILLE, FLORIDA 32641 / (352) 377-5821
3910 S WASHINGTON AVE, SUITE 210, TITUSVILLE, FLORIDA 32780 / (321) 269-2950

SIGNATURES	DATE
DRAWN P. UPSTILL	12.18.13
CHECKED M. O'BRIEN	12.18.13
SUBMITTED: ARCH/ENG OF RECORD W. NICKEL	12/18/13
ST of LICENSURE: FL LICENSE NO: 68638	
APPROVED R. KOLLER	12/18/13
K. MILLER	12/19/13

NATIONAL AERONAUTICS AND SPACE ADMINISTRATION
JOHN F. KENNEDY SPACE CENTER, NASA
KENNEDY SPACE CENTER, FLORIDA

KSC CENTRAL CAMPUS REPLACEMENT HEADQUARTERS BUILDING PHASE 1 VOL. 1 OF 4

DEMOLITION PLAN

FILE NO.	SIZE	DWG. NO.
C-12070.00	F	79K39622 VOL 1

PCN. NO. 98745.1a SHEET 30

C110

KSC FORM 1-11 (3/76)(C/G 3/94)

NOTICE: When Government drawings, specifications, or other data are used for any purpose other than in connection with a definitely related Government procurement operation, the United States Government thereby incurs no responsibility nor obligation whatsoever; and the fact that the Government may have formulated, furnished, or in any way supplied the said drawings, specifications or other data is not to be regarded by implication or otherwise as in any manner licensing the holder or any other person or corporation, or conveying any rights or permission to manufacture, use, or sell any patented invention that may in any way be related thereto.

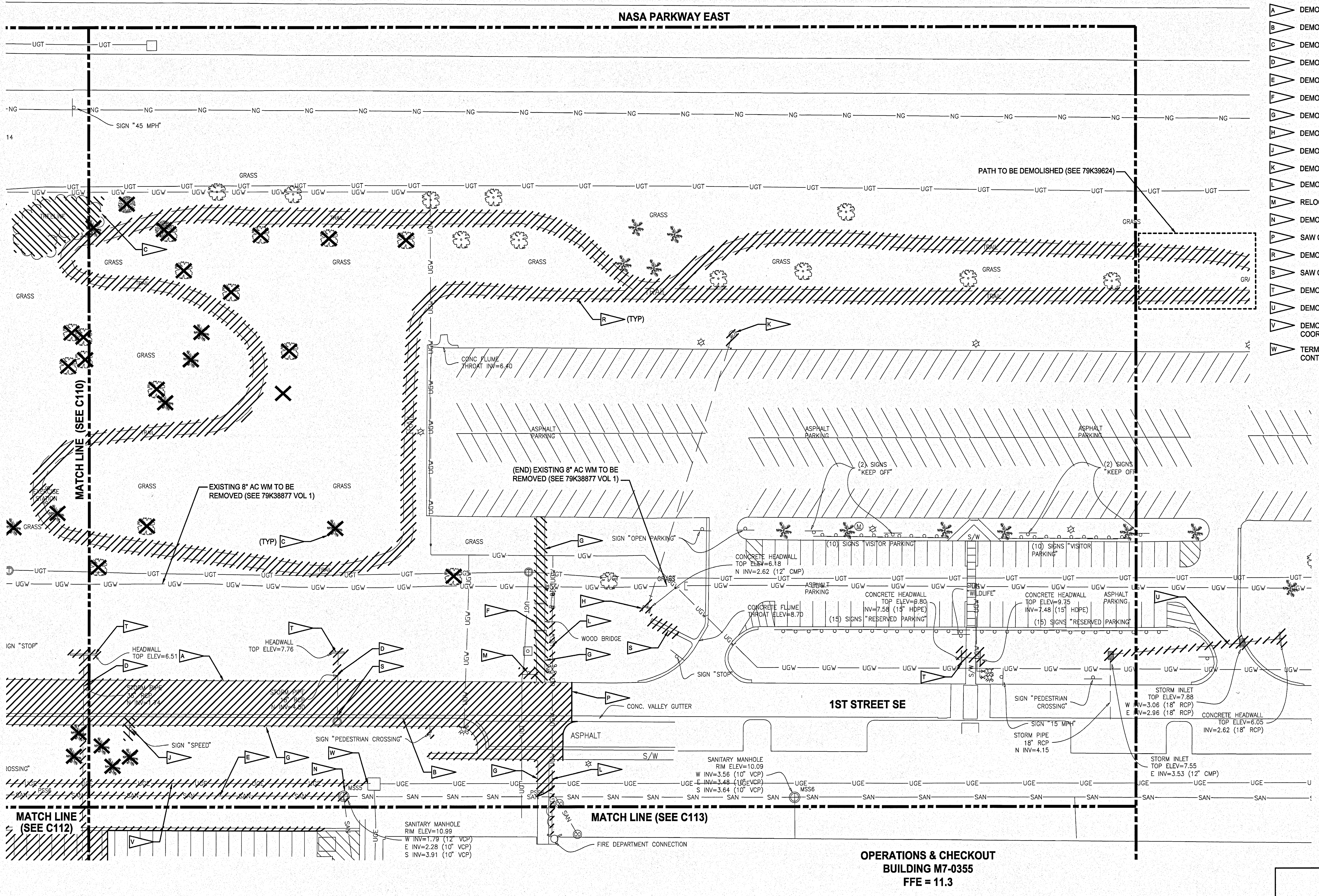

NOTES

- A — DEMOLISH EXISTING ASPHALT PAVEMENT
- B — DEMOLISH CURB AND GUTTER
- C — DEMOLISH TREES AND SHRUBS
- D — DEMOLISH CULVERT
- E — DEMOLISH SANITARY SEWER
- F — DEMOLISH BRIDGE
- G — DEMOLISH CONCRETE SIDEWALK
- H — DEMOLISH HEADWALL, 3 FEET OF PIPE, AND PLUG 12" CMP
- J — DEMOLISH SIGN
- K — DEMOLISH STRUCTURE, 3 FEET OF PIPE, AND PLUG 12" CMP
- L — DEMOLISH 6" AC WATER MAIN
- M — RELOCATE SIGN 5' NORTH
- N — DEMOLISH SANITARY SEWER MANHOLE
- P — SAW CUT EXISTING PAVEMENT/CURB
- R — DEMOLISH PATH, BACKFILL TO MATCH EXISTING GRADE AND SOD
- S — SAW CUT AND DEMOLISH 21 LF EXISTING CONCRETE FLUME
- T — DEMOLISH HEADWALLS AND 21 FEET OF HDPE PIPE
- U — DEMOLISH 2 STRUCTURE, 121 FEET OF PIPE, AND HEADWALL
- V — DEMOLISH UNDERGROUND ELECTRIC, MANHOLES, AND JUNCTIONS. COORDINATE WITH CONTRACTING OFFICER
- W — TERMINATE POWER AT NEAREST JUNCTION. COORDINATE WITH CONTRACTING OFFICER

GRAPHIC SCALE
0 15 30 60 90
SCALE IN FEET
1" = 30'

SYM	ZONE	REVISIONS	DATE	APPROVED

JONES EDMUNDS
730 NE WALDO ROAD, GAINESVILLE, FLORIDA 32641 / (352) 377-5821
3910 S WASHINGTON AVE, SUITE 210, TITUSVILLE, FLORIDA 32780 / (321) 269-2950

SIGNATURES	DATE
DRAWN P. UPSTILL	12.18.13
CHECKED M. O'BRIEN	12.18.13
SUBMITTED: ARCH/ENG OF RECORD W. NICKEL	12/18/13
ST of LICENSURE: FL LICENSE NO: 68638	
APPROVED R. KOLLER	12/18/13
K. MILLER	12/19/13

NATIONAL AERONAUTICS AND SPACE ADMINISTRATION
JOHN F. KENNEDY SPACE CENTER, NASA
KENNEDY SPACE CENTER, FLORIDA

KSC CENTRAL CAMPUS
REPLACEMENT HEADQUARTERS BUILDING
PHASE 1
VOL. 1 OF 4

DEMOLITION PLAN

FILE NO.	SIZE	DWG. NO.
C-12070.00	F	79K39622 VOL 1

PCN. NO. 98745.1a

C111

KSC FORM 1-11 (3/76)(C/G 3/94)

NOTICE: When Government drawings, specifications, or other data are used for any purpose other than in connection with a definitely related Government procurement operation, the United States Government thereby incurs no responsibility nor obligation whatsoever; and the fact that the Government may have formulated, furnished, or in any way supplied the said drawings, specifications or other data is not to be regarded by implication or otherwise as in any manner licensing the holder or any other person or corporation, or conveying any rights or permission to manufacture, use, or sell any patented invention that may in any way be related thereto.

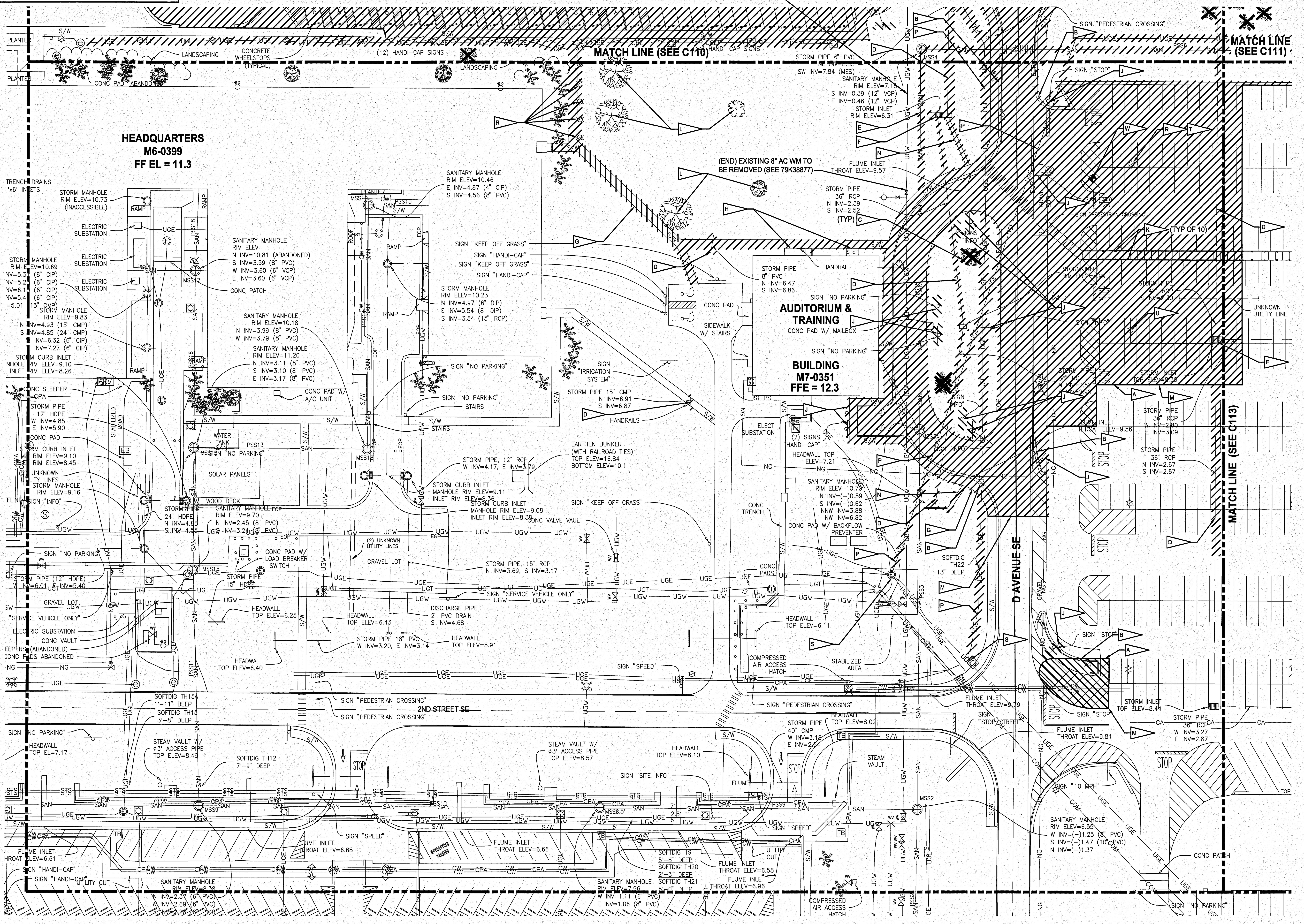

NOTES

- A DEMOLISH EXISTING ASPHALT PAVEMENT
- B DEMOLISH CURB AND GUTTER
- C DEMOLISH TREES AND SHRUBS
- D DEMOLISH CULVERT
- E DEMOLISH SANITARY SEWER (SEE SANITARY CONNECTION ON UTILITY PLAN DRAWINGS)
- F DEMOLISH DRAINAGE STRUCTURE
- G DEMOLISH CONCRETE SIDEWALK
- H EXISTING STEPS TO REMAIN AND BE PROTECTED
- J DEMOLISH SIGN
- K DEMOLISH BOLLARDS
- L PROTECT/RELOCATE MEMORIAL TREES (SEE LANDSCAPE PLANS)
- M SAW CUT EXISTING PAVEMENT/CURB
- N DEMOLISH CONCRETE FLUME
- P DEMOLISH UNDERGROUND ELECTRIC, MANHOLES, AND JUNCTIONS. COORDINATE WITH CONTRACTING OFFICER
- R DEMOLISH LIGHT POLE
- S TERMINATE POWER AT NEAREST JUNCTION. COORDINATE WITH CONTRACTING OFFICER
- T DEMOLISH UNDERGROUND ELECTRIC. POWER SOURCE UNKNOWN. COORDINATE WITH CONTRACTING OFFICER
- U EXISTING LIGHT POLE TO REMAIN AND BE PROTECTED
- W BENCHMARK SHALL NOT BE DISTURBED

SYM	ZONE	REVISIONS	DATE	APPROVED

JONES EDMUNDS

730 NE WALDO ROAD, GAINESVILLE, FLORIDA 32641 / (352) 377-5821
3910 S WASHINGTON AVE, SUITE 210, TITUSVILLE, FLORIDA 32780 / (321) 269-2950

SIGNATURES	DATE
DRAWN P. UPSTILL	12.18.13
CHECKED M. O'BRIEN	12.18.13
SUBMITTED: ARCH/ENG OF RECORD W. NICKEL	12/18/13
ST of LICENSURE: FL LICENSE NO: 68638	
APPROVED R. KOLLER	12/18/13
K. MILLER	12/19/13

NATIONAL AERONAUTICS AND SPACE ADMINISTRATION
JOHN F. KENNEDY SPACE CENTER, NASA
KENNEDY SPACE CENTER, FLORIDA

KSC CENTRAL CAMPUS
REPLACEMENT HEADQUARTERS BUILDING
PHASE 1
VOL. 1 OF 4

DEMOLITION PLAN

FILE NO.	SIZE	DWG. NO.
C-12070.00	F	79K39622 VOL 1

PCN. NO. 98745.1a SHEET 32

C112

NOTICE: When Government drawings, specifications, or other data are used for any purpose other than in connection with a definitely related Government procurement operation, the United States Government thereby incurs no responsibility nor obligation whatsoever; and the fact that the Government may have formulated, furnished, or in any way supplied the said drawings, specifications or other data is not to be regarded by implication or otherwise as in any manner licensing the holder or any other person or corporation, or conveying any rights or permission to manufacture, use, or sell any patented invention that may in any way be related thereto.

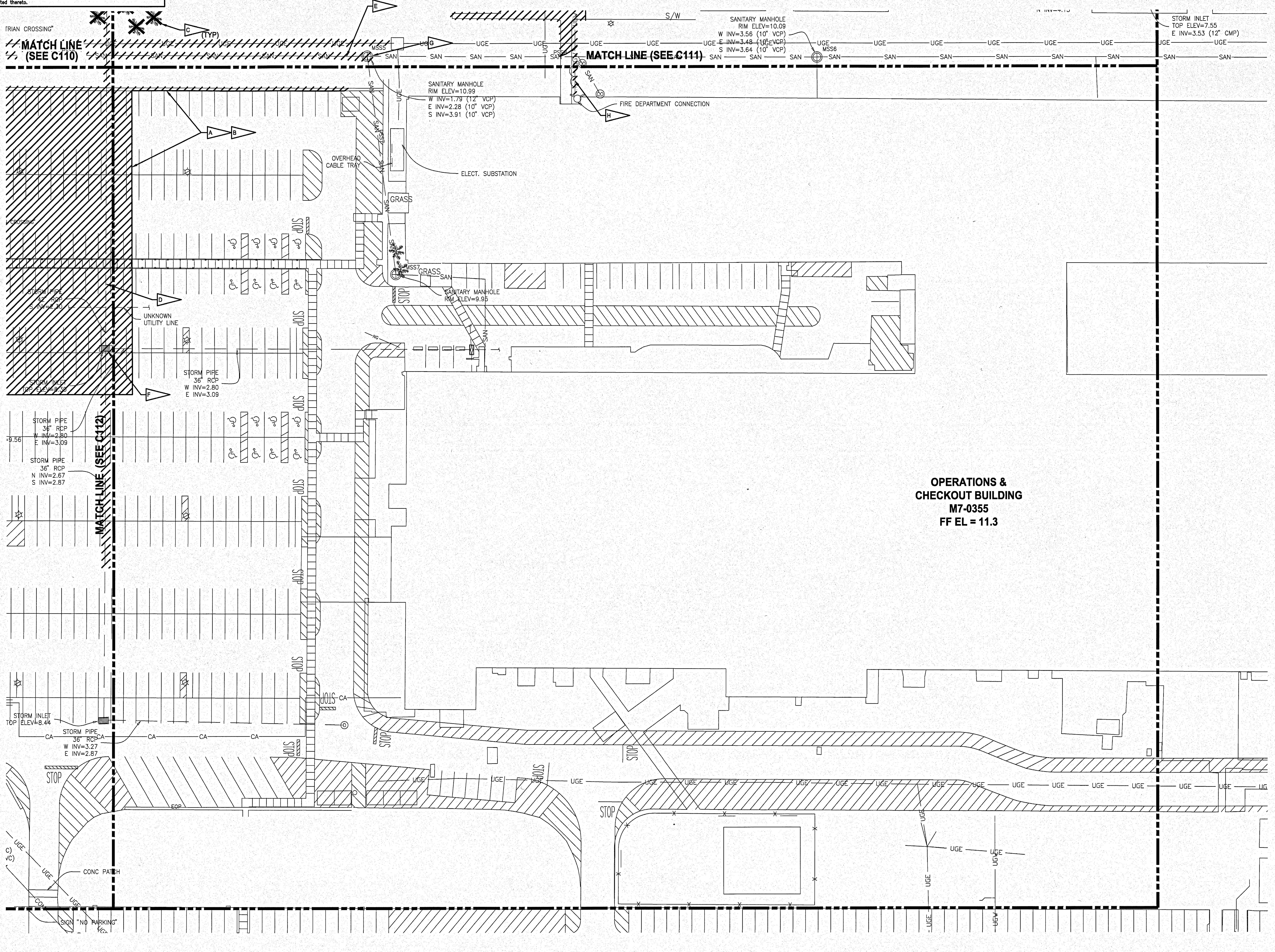

NOTES

- A: DEMOLISH EXISTING ASPHALT PAVEMENT
- B: SAW CUT EXISTING PAVEMENT/CURB
- C: REMOVE TREES AND SHRUBS
- D: REMOVE CULVERT
- E: REMOVE SANITARY SEWER
- F: REMOVE DRAINAGE STRUCTURE
- G: REMOVE SANITARY SEWER MANHOLE
- H: DEMOLISH 6" AC WATER MAIN

SYM	ZONE	REVISIONS	DATE	APPROVED

JONES EDMUNDS
730 NE WALDO ROAD, GAINESVILLE, FLORIDA 32641 / (352) 377-5821
3910 S WASHINGTON AVE, SUITE 210, TITUSVILLE, FLORIDA 32780 / (321) 269-2950

SIGNATURES	DATE
DRAWN P. UPSTILL	12.18.13
CHECKED M. O'BRIEN	12.18.13
SUBMITTED: ARCH/ENG OF RECORD W. NICKEL	12/18/13
ST of LICENSURE: FL LICENSE NO: 68638	
APPROVED R. KOLLER	12/18/13
K. MILLER	12/19/13

NATIONAL AERONAUTICS AND SPACE ADMINISTRATION
JOHN F. KENNEDY SPACE CENTER, NASA
KENNEDY SPACE CENTER, FLORIDA

KSC CENTRAL CAMPUS
REPLACEMENT HEADQUARTERS BUILDING
PHASE 1
VOL. 1 OF 4

DEMOLITION PLAN

FILE NO.	SIZE	DWG. NO.
C-12070.00	F	79K39622 VOL 1

PCN. NO. 98745.1a

C113

KSC FORM 1-11 (3/76)(C/G 3/94)

NOTICE: When Government drawings, specifications, or other data are used for any purpose other than in connection with a definitely related Government procurement operation, the United States Government thereby incurs no responsibility nor obligation whatsoever; and the fact that the Government may have formulated, furnished, or in any way supplied the said drawings, specifications or other data is not to be regarded by implication or otherwise as in any manner licensing the holder or any other person or corporation, or conveying any rights or permission to manufacture, use, or sell any patented invention that may in any way be related thereto.

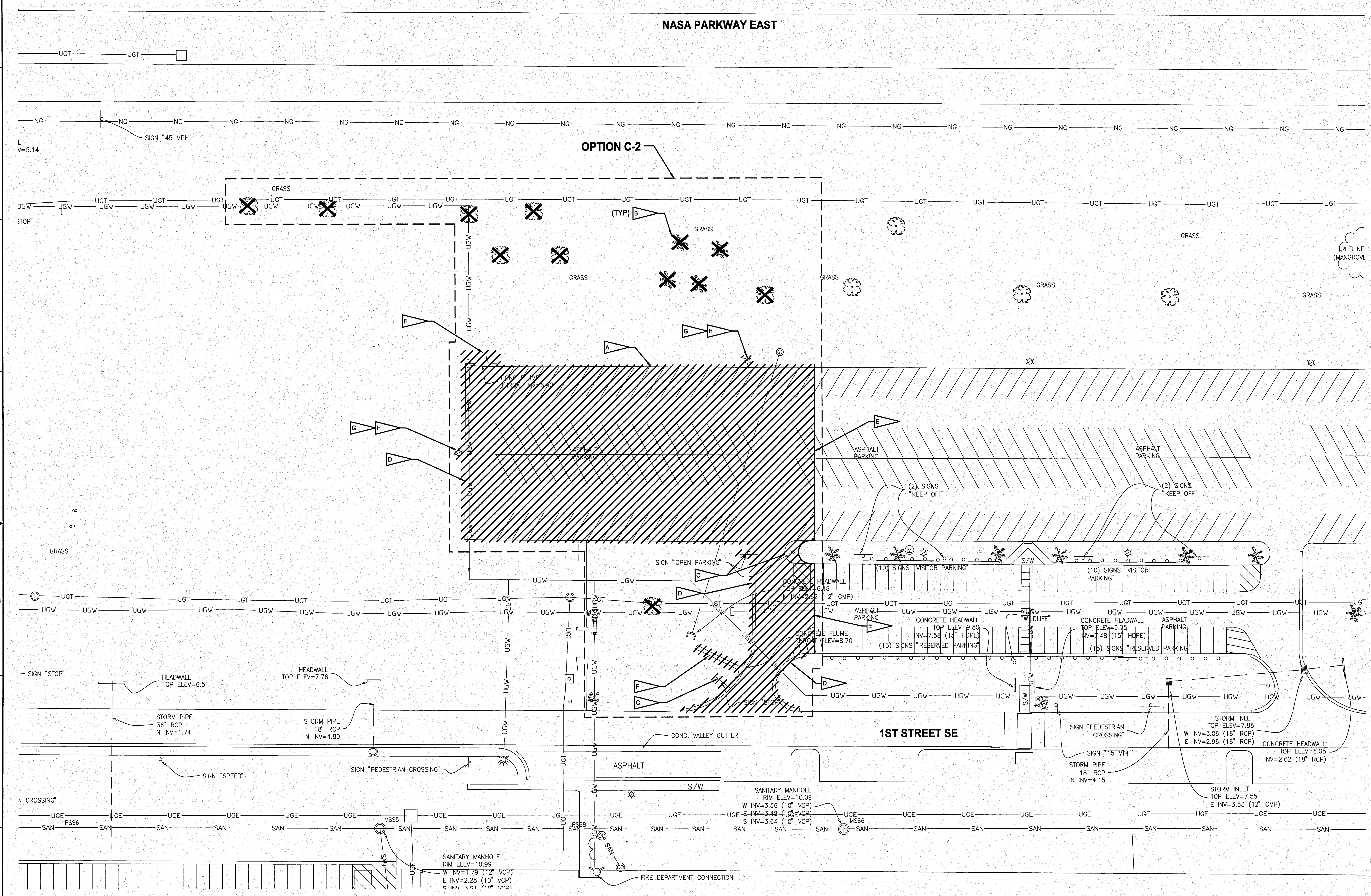

NOTES

- A DEMOLISH EXISTING ASPHALT PAVEMENT
- B REMOVE TREES AND SHRUBS
- C REMOVE SIGNS (3)
- D DEMOLISH CURB AND GUTTER
- E SAWCUT EXISTING PAVEMENT/CURB
- F DEMOLISH CONCRETE FLUME
- G DEMOLISH LIGHT POLE
- H DEMOLISH UNDERGROUND ELECTRIC. POWER SOURCE UNKNOWN.

GRAPHIC SCALE
0 15 30 60 90
SCALE IN FEET
1" = 30'

SYM	ZONE	REVISIONS	DATE	APPROVED

JONES EDMUNDS
730 NE WALDO ROAD, GAINESVILLE, FLORIDA 32641 / (352) 377-5821
3910 S WASHINGTON AVE, SUITE 210, TITUSVILLE, FLORIDA 32780 / (321) 269-2950

SIGNATURES	DATE
DRAWN P. UPSTILL	12.18.13
CHECKED M. O'BRIEN	12.18.13
SUBMITTED: ARCH/ENG OF RECORD W. NICKEL	12/18/13
ST of LICENSURE: FL LICENSE NO: 68638	
APPROVED R. KOLLER	12/18/13
K. MILLER	12/19/13

NATIONAL AERONAUTICS AND SPACE ADMINISTRATION
JOHN F. KENNEDY SPACE CENTER, NASA
KENNEDY SPACE CENTER, FLORIDA

KSC CENTRAL CAMPUS
REPLACEMENT HEADQUARTERS BUILDING
PHASE 1
VOL. 1 OF 4

DEMOLITION PLAN - OPTION C-2

FILE NO. C-12070.00 | SIZE F | DWG. NO. 79K39622 VOL 1
PCN. NO. 98745.1a | SHEET 34

C114

KSC FORM 1-11 (3/76)(C/G 3/94)

NOTICE: When Government drawings, specifications, or other data are used for any purpose other than in connection with a definitely related Government procurement operation, the United States Government thereby incurs no responsibility nor obligation whatsoever; and the fact that the Government may have formulated, furnished, or in any way supplied the said drawings, specifications or other data is not to be regarded by implication or otherwise as in any manner licensing the holder or any other person or corporation, or conveying any rights or permission to manufacture, use, or sell any patented invention that may in any way be related thereto.

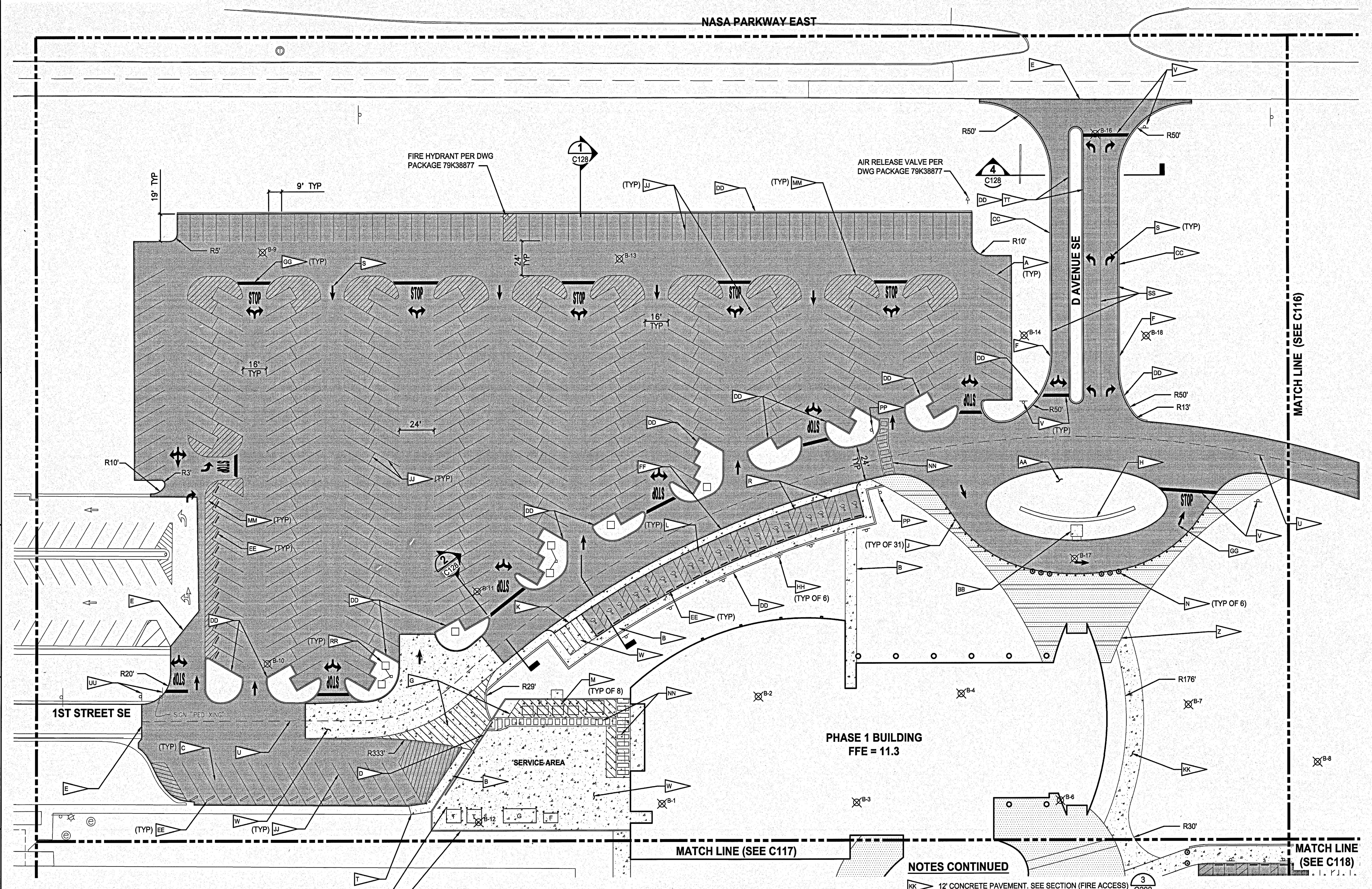

NOTES

- A 9'x19' ANGLED PARKING SPACE. SEE DETAIL 1/C115
- B 6' CONC SIDEWALK. SEE DETAIL 6/C207
- C 10'x28' ANGLED SERVICE VEHICLE SPACES. SEE DETAIL 2/C115
- D ACCESS CONTROL GATE (SEE ARCHITECTURAL PLANS)
- E TIE INTO EXISTING PAVEMENT. SEE SECTION 2/C202
- F TRANSITION FROM RIBBON CURB TO TYPE D CURB OVER 3'.
- G 4" YELLOW PAVEMENT MARKING
- H MONUMENT SIGN (SEE ARCHITECTURAL PLANS)
- J ANTI-RAM BOLLARD (SEE STRUCTURAL PLANS)
- K MOTORCYCLE PARKING. SEE DETAIL 4/C203
- L 8'x18' HANDICAP PARKING SPACE W/ 5' ACCESS AISLE. SEE DETAIL 1/C203
- M TYPE 1 BOLLARD. SEE DETAIL 1/C201
- N ANTI-RAM REMOVABLE BOLLARD (SEE STRUCTURAL PLANS)
- P CONCRETE SCREEN WALL (SEE ARCHITECTURAL PLANS AND STRUCTURAL PLANS)
- R (2) 8'x18' VAN ACCESSIBLE HANDICAP PARKING SPACES WITH 8' ACCESS AISLE. SEE DETAIL 2/C203
- S TRAFFIC FLOW ARROW PER FDOT SI 17346
- T TIE INTO EXISTING SIDEWALK
- U 6" YELLOW 10-30 SKIP STRIPING THERMOPLASTIC PAVEMENT MARKING PER FDOT SI 17346
- V STOP SIGN AND 24" WHITE STOP BAR
- W CONCRETE PAVEMENT. SEE DETAIL 3/C202
- Z FIRE TRUCK ACCESS POINT
- AA MONUMENT AREA (SEE ARCHITECTURAL AND LANDSCAPE PLANS)
- BB CONCRETE PAD WITH ALUMINUM FLAG POLE (SEE STRUCTURAL PLANS)
- CC RIBBON CURB. SEE DETAIL 2/C201
- DD TYPE D CURB PER FDOT SI 300
- EE CONCRETE WHEEL STOP. SEE DETAIL 4/C201
- FF CONCRETE VALLEY GUTTER. SEE DETAIL 2/C209
- GG 24" WHITE STOP BAR, "STOP", TRAFFIC FLOW ARROW PER FDOT SI 17346
- HH HANDICAP PARKING SIGN. SEE DETAIL 5/C203
- JJ 4" WHITE PAVEMENT MARKING

(NOTES CONTINUED BELOW)

NOTES CONTINUED

- KK 12' CONCRETE PAVEMENT. SEE SECTION (FIRE ACCESS) 3/C202
- LL. WAYFINDING/SIGNAGE/RESERVED PARKING SPACES AND SIGNS NOT SHOWN FOR CLARITY SEE DETAIL 4/C209
- MM 4" YELLOW 60° STRIPING 12" OC.
- NN 12" WHITE CROSSWALK PAVEMENT MARKINGS PER FDOT SI 17346
- PP CROSS WALK SIGN, FDOT W11-2 & W16-7PL PER SI 17346
- RR CHARGING VEHICLE STATIONS, OPTION L-3. SEE ELECTRICAL PLANS
- SS 6" WHITE THERMOPLASTIC PAVEMENT MARKING
- TT 6" YELLOW THERMOPLASTIC PAVEMENT MARKING
- UU REMOVE AND REINSTALL SIGN "PED XING"

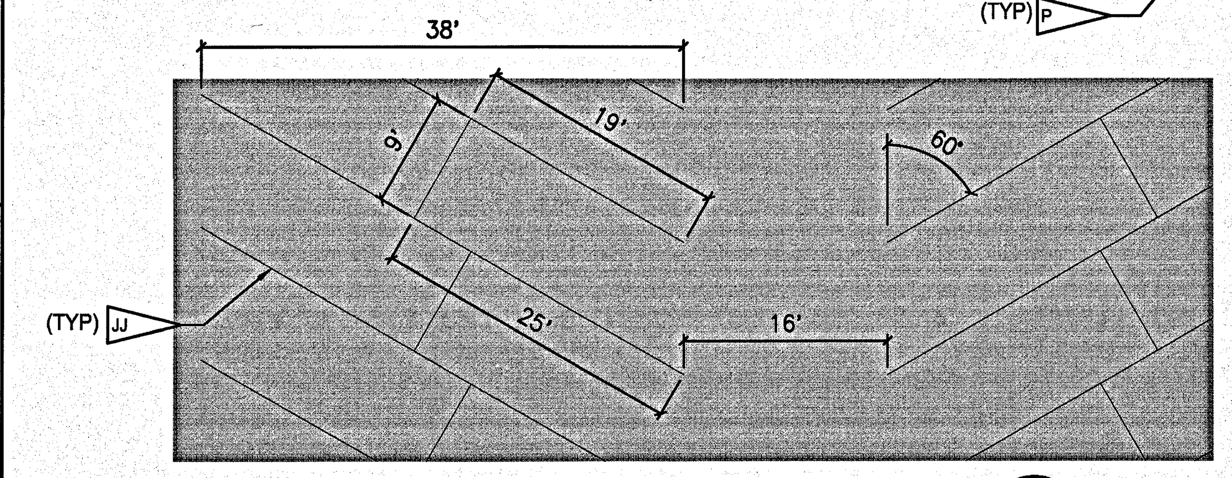

TYPICAL PARKING SPACE DETAIL 1
1"=10'

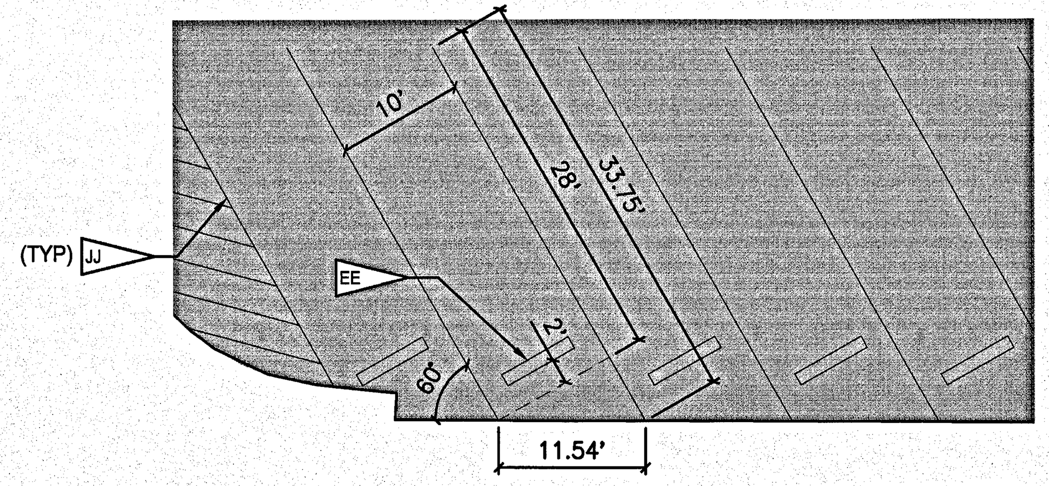

SERVICE VEHICLE PARKING SPACE 2/C115
1"=10'

GRAPHIC SCALE 0 5 10 20 30 — SCALE IN FEET 1" = 10'

GRAPHIC SCALE 0 15 30 60 90 — SCALE IN FEET 1" = 30'

N

SYM	ZONE		DATE	APPROVED

REVISIONS

JONES EDMUNDS
730 NE WALDO ROAD, GAINESVILLE, FLORIDA 32641 / (352) 377-5821
3910 S WASHINGTON AVE, SUITE 210, TITUSVILLE, FLORIDA 32780 / (321) 269-2950

SIGNATURES	DATE
DRAWN P. UPSTILL	12.18.13
CHECKED M. O'BRIEN	12.18.13
SUBMITTED: ARCH/ENG OF RECORD W. NICKEL	12/18/13
ST of LICENSURE: FL LICENSE NO: 68638	
APPROVED R. KOLLER	12/18/13
K. MILLER	12/19/13

NATIONAL AERONAUTICS AND SPACE ADMINISTRATION
JOHN F. KENNEDY SPACE CENTER, NASA
KENNEDY SPACE CENTER, FLORIDA

KSC CENTRAL CAMPUS
REPLACEMENT HEADQUARTERS BUILDING
PHASE 1
VOL. 1 OF 4

SITE PLAN

C115

FILE NO. C-12070.00 | SIZE F | DWG. NO. 79K39622 VOL 1
PCN. NO. 98745.1a | SHEET 35

KSC FORM 1-11 (3/76)(C/G 3/94)

NOTICE: When Government drawings, specifications, or other data are used for any purpose other than in connection with a definitely related Government procurement operation, the United States Government thereby incurs no responsibility nor obligation whatsoever; and the fact that the Government may have formulated, furnished, or in any way supplied the said drawings, specifications or other data is not to be regarded by implication or otherwise as in any manner licensing the holder or any other person or corporation, or conveying any rights or permission to manufacture, use, or sell any patented invention that may in any way be related thereto.

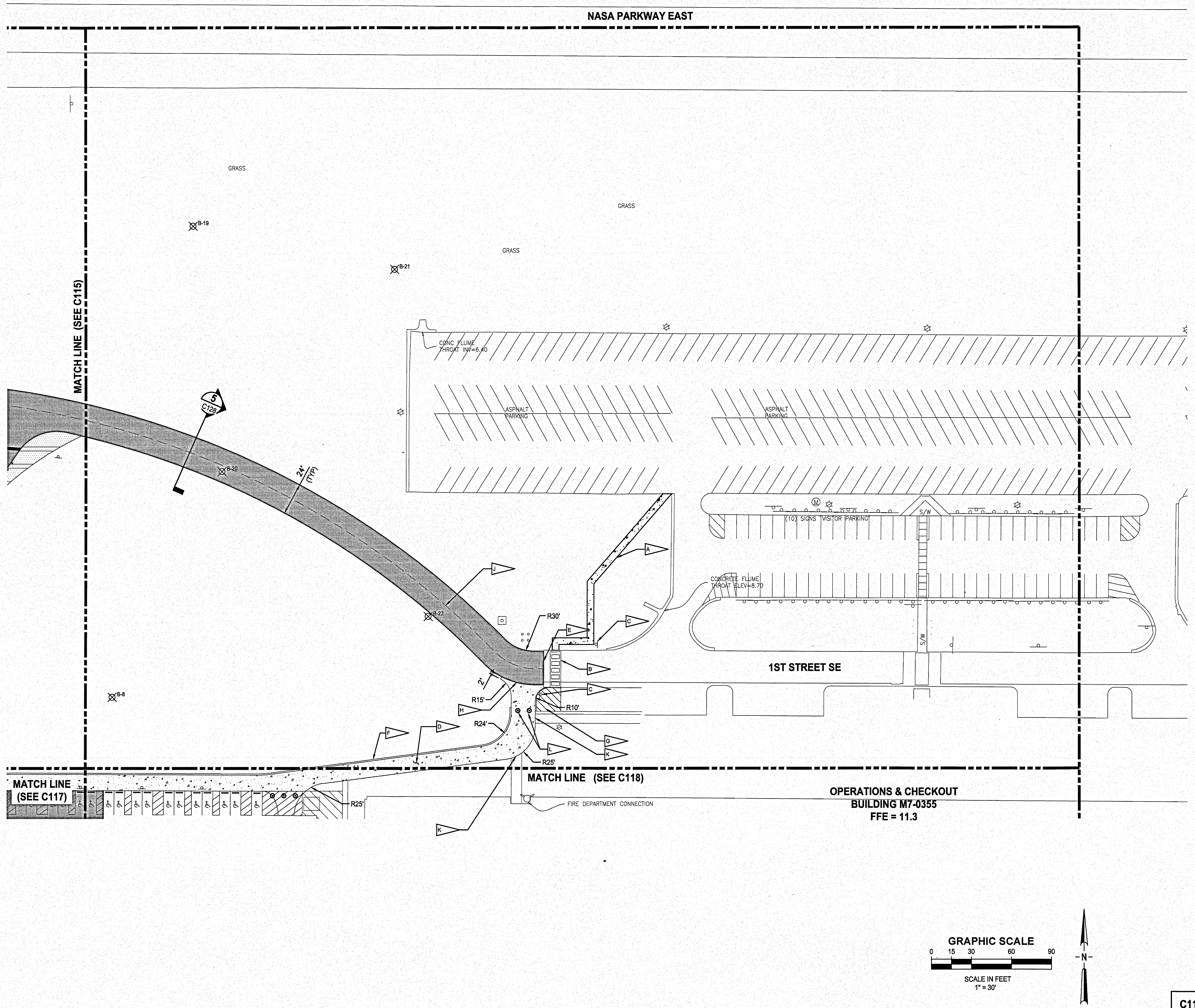

NOTES

- A — 5' WIDE CONCRETE WALK. SEE DETAIL 6/C207
- B — 12" WHITE CROSS WALK PAVEMENT MARKINGS PER FDOT SI 17346
- C — CROSS WALK SIGN, FDOT W11-2 & W16-7PL PER SI 17346
- D — 12' CONCRETE PAVEMENT (FIRE ACCESS). SEE SECTION 3/C202
- E — TIE INTO EXISTING PAVEMENT, SEE SECTION 2/C202
- F — TYPE D CURB PER FDOT SI 300
- G — 4" WHITE PAVEMENT MARKING
- H — FIRE TRUCK ACCESS POINT
- J — 6" YELLOW 10-30 SKIP STRIPING THERMOPLASTIC PAVEMENT MARKING PER FDOT SI 17346
- K — TIE INTO EXISTING SIDEWALK
- L — ANTI-RAM REMOVABLE BOLLARD (SEE STRUCTURAL PLANS)

SYM	ZONE	REVISIONS	DATE	APPROVED

JONES EDMUNDS
730 NE WALDO ROAD, GAINESVILLE, FLORIDA 32641 / (352) 377-5821
3910 S WASHINGTON AVE, SUITE 210, TITUSVILLE, FLORIDA 32780 / (321) 269-2950

SIGNATURES	DATE
DRAWN P. UPSTILL	12.18.13
CHECKED M. O'BRIEN	12.18.13
SUBMITTED: ARCH/ENG OF RECORD W. NICKEL	12/18/13
ST of LICENSURE: FL LICENSE NO. 68638	
APPROVED R. KOLLER	12/18/13
K. MILLER	12/19/13

NATIONAL AERONAUTICS AND SPACE ADMINISTRATION
JOHN F. KENNEDY SPACE CENTER, NASA
KENNEDY SPACE CENTER, FLORIDA

KSC CENTRAL CAMPUS
REPLACEMENT HEADQUARTERS BUILDING
PHASE 1
VOL. 1 OF 4

SITE PLAN

FILE NO.	SIZE	DWG. NO.
C-12070.00	F	79K39622 VOL 1

PCN. NO. 98745.1a — SHEET 36

C116

KSC FORM 1-11 (3/76)(C/G 3/94)

NOTICE: When Government drawings, specifications, or other data are used for any purpose other than in connection with a definitely related Government procurement operation, the United States Government thereby incurs no responsibility nor obligation whatsoever; and the fact that the Government may have formulated, furnished, or in any way supplied the said drawings, specifications or other data is not to be regarded by implication or otherwise as in any manner licensing the holder or any other person or corporation, or conveying any rights or permission to manufacture, use, or sell any patented invention that may in any way be related thereto.

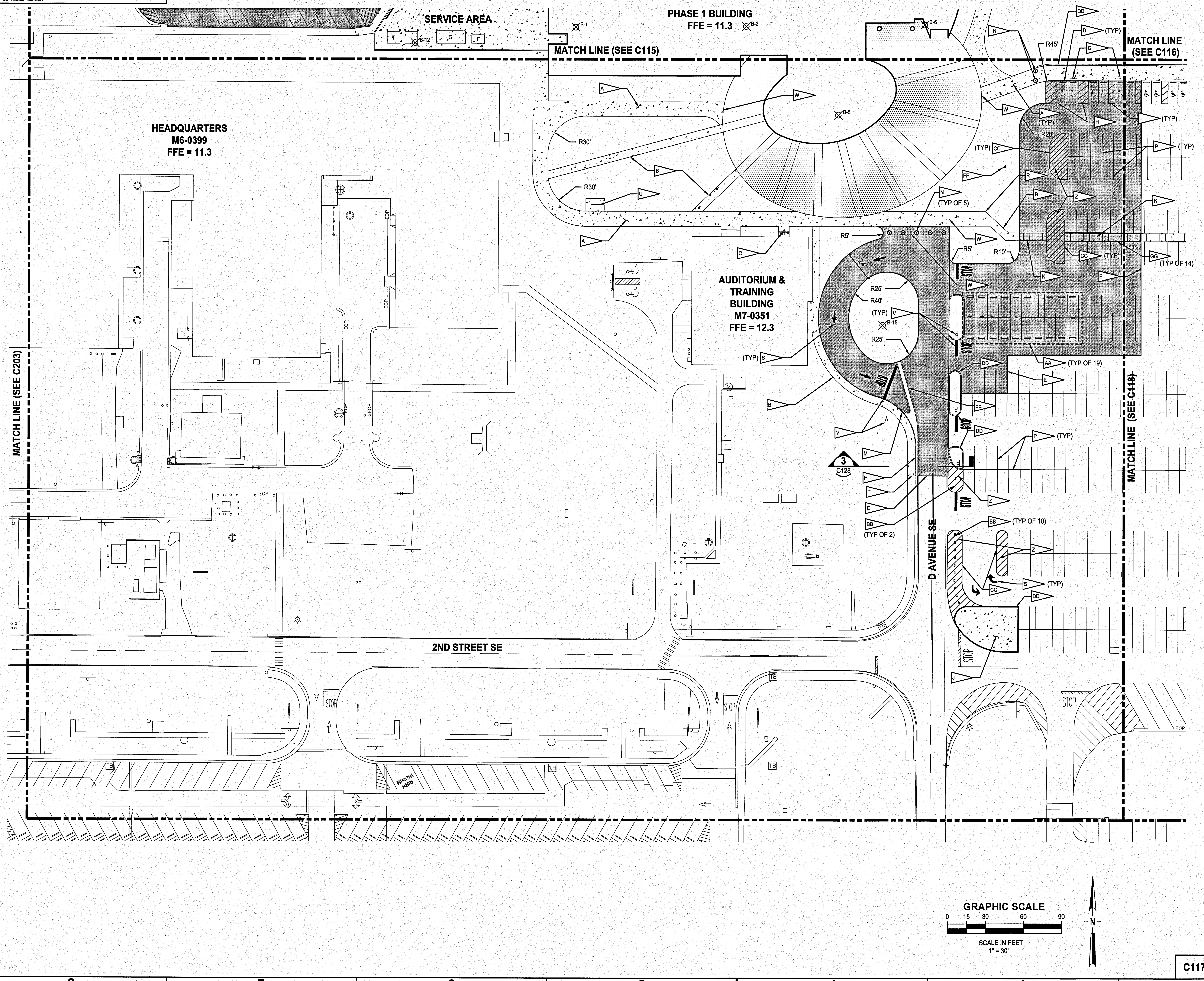

NOTES

- A — 12' CONCRETE PAVEMENT. SEE SECTION (FIRE ACCESS) 3/C202
- B — 6' CONC SIDEWALK. SEE DETAIL 6/C207
- C — CONNECTION TO STEPS AND RAMP. SEE SECTION 3/C139
- D — CONCRETE WHEEL STOP. SEE DETAIL 4/C201
- E — TIE INTO EXISTING PAVEMENT. SEE DETAIL 2/C202
- F — TYPE F CURB PER FDOT SI 300
- G — HANDICAP PARKING SIGN. SEE DETAIL 5/C203
- H — 8'x18' VAN ACCESSIBLE HANDICAP PARKING SPACE W/ 8' ACCESSIBLE AISLE. SEE DETAIL 2/C203
- J — VARYING WIDTH CONCRETE PAVING. SEE DETAIL 3/C202
- K — 12" WHITE CROSSWALK PAVEMENT MARKINGS PER FDOT SI 17346
- L — 8'x18' HANDICAP PARKING SPACE W/ 5' ACCESS AISLE. SEE DETAIL 1/C203
- M — 5 LF TRANSITION TO ZERO REVEAL CURB AND GUTTER
- N — ANTI-RAM REMOVABLE BOLLARD (SEE STRUCTURAL PLANS)
- P — 4" WHITE PAVEMENT MARKING
- R — TRANSITION 6' WALK TO 12' FIRE ACCESS (4" THICK THROUGH TRANSITION)
- S — TRAFFIC FLOW ARROW PER FDOT SI 17346
- T — TIE INTO EXISTING SIDEWALK
- U — 1 BIKE RACK. SEE DETAIL 5/C201
- V — STOP SIGN AND 24" WHITE STOP BAR PER FDOT SI 17346
- W — FIRE TRUCK ACCESS POINT
- Z — 4" YELLOW 60° STRIPING 12" OC
- AA — RELOCATED 30 MINUTE PARKING SPACES. 30 MINUTE PARKING SPACE SIGNS SHALL BE INSTALLED AND SPOTS REPAINTED PRIOR TO START OF CONSTRUCTION.
- BB — FLEXIBLE/REMOVABLE POST DELINEATOR. SEE DETAIL 1/C209
- CC — 4" YELLOW PAVEMENT MARKING
- DD — TYPE D CURB PER FDOT SI 300
- EE — CONCRETE VALLEY GUTTER. SEE DETAIL 3/C209
- FF — PROVIDE AN ADDITIONAL 6" WIDE x 6" THICK CONCRETE AROUND EXISTING SURVEY MONUMENT BOX. 1" CHAMFER ON ALL OUTSIDE EDGES
- GG — TYPE 1 BOLLARD. SEE DETAIL 1/C201

SYM	ZONE	REVISIONS	DATE	APPROVED

JONES EDMUNDS
730 NE WALDO ROAD, GAINESVILLE, FLORIDA 32641 / (352) 377-5821
3910 S WASHINGTON AVE, SUITE 210, TITUSVILLE, FLORIDA 32780 / (321) 269-2950

SIGNATURES	DATE
DRAWN P. UPSTILL	12.18.13
CHECKED M. O'BRIEN	12.18.13
SUBMITTED: ARCH/ENG OF RECORD W. NICKEL	12/18/13
ST of LICENSURE: FL LICENSE NO: 68638	
APPROVED R. KOLLER	12/18/13
K. MILLER	12/19/13

NATIONAL AERONAUTICS AND SPACE ADMINISTRATION
JOHN F. KENNEDY SPACE CENTER, NASA
KENNEDY SPACE CENTER, FLORIDA

KSC CENTRAL CAMPUS
REPLACEMENT HEADQUARTERS BUILDING
PHASE 1
VOL. 1 OF 4

SITE PLAN

C117

FILE NO.	SIZE	DWG. NO.
C-12070.00	F	79K39622 VOL 1

PCN. NO. 98745.1a

NOTICE: When Government drawings, specifications, or other data are used for any purpose other than in connection with a definitely related Government procurement operation, the United States Government thereby incurs no responsibility nor obligation whatsoever; and the fact that the Government may have formulated, furnished, or in any way supplied the said drawings, specifications or other data is not to be regarded by implication or otherwise as in any manner licensing the holder or any other person or corporation, or conveying any rights or permission to manufacture, use, or sell any patented invention that may in any way be related thereto.

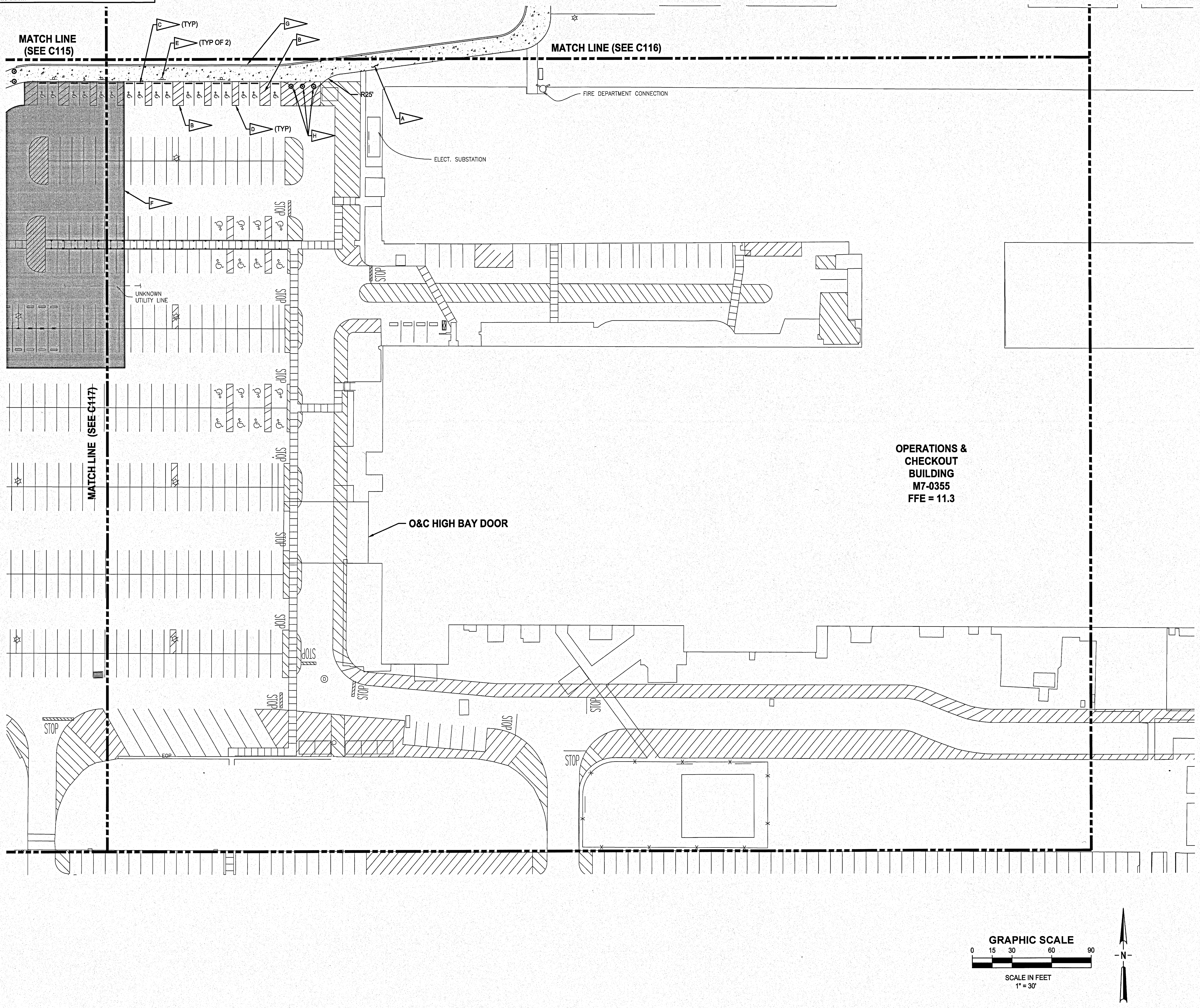

NOTES

- A — 12' CONCRETE PAVEMENT. SEE SECTION (FIRE ACCESS) 3/C202
- B — 8'x18' VAN ACCESSIBLE HANDICAP PARKING SPACE W/ 8' ACCESSIBLE AISLE. SEE DETAIL 2/C203
- C — CONCRETE WHEEL STOP. SEE DETAIL 4/C201
- D — 8'x18' HANDICAP PARKING SPACE W/ 5' ACCESS AISLE. SEE DETAIL 1/C203
- E — HANDICAP PARKING SIGN. SEE DETAIL 5/C203
- F — TIE INTO EXISTING PAVEMENT. SEE DETAIL 2/C202
- G — TYPE D CURB PER FDOT SI 300
- H — ANTI-RAM REMOVABLE BOLLARD (SEE STRUCTURAL PLANS)

SYM	ZONE		DATE	APPROVED

REVISIONS

JONES EDMUNDS
730 NE WALDO ROAD, GAINESVILLE, FLORIDA 32641 / (352) 377-5821
3910 S WASHINGTON AVE, SUITE 210, TITUSVILLE, FLORIDA 32780 / (321) 269-2950

SIGNATURES	DATE
DRAWN P. UPSTILL	12.18.13
CHECKED M. O'BRIEN	12.18.13
SUBMITTED: ARCH/ENG OF RECORD W. NICKEL	12/18/13
ST of LICENSURE: FL LICENSE NO: 68638	
APPROVED R. KOLLER	12/18/13
K. MILLER	12/19/13

NATIONAL AERONAUTICS AND SPACE ADMINISTRATION
JOHN F. KENNEDY SPACE CENTER, NASA
KENNEDY SPACE CENTER, FLORIDA

KSC CENTRAL CAMPUS
REPLACEMENT HEADQUARTERS BUILDING
PHASE 1
VOL. 1 OF 4

SITE PLAN

FILE NO.	SIZE	DWG. NO.
C-12070.00	F	79K39622 VOL 1

PCN. NO. 98745.1a

C118

KSC FORM 1-11 (3/76)(C/G 3/94)

NOTICE: When Government drawings, specifications, or other data are used for any purpose other than in connection with a definitely related Government procurement operation, the United States Government thereby incurs no responsibility nor obligation whatsoever; and the fact that the Government may have formulated, furnished, or in any way supplied the said drawings, specifications or other data is not to be regarded by implication or otherwise as in any manner licensing the holder or any other person or corporation, or conveying any rights or permission to manufacture, use, or sell any patented invention that may in any way be related thereto.

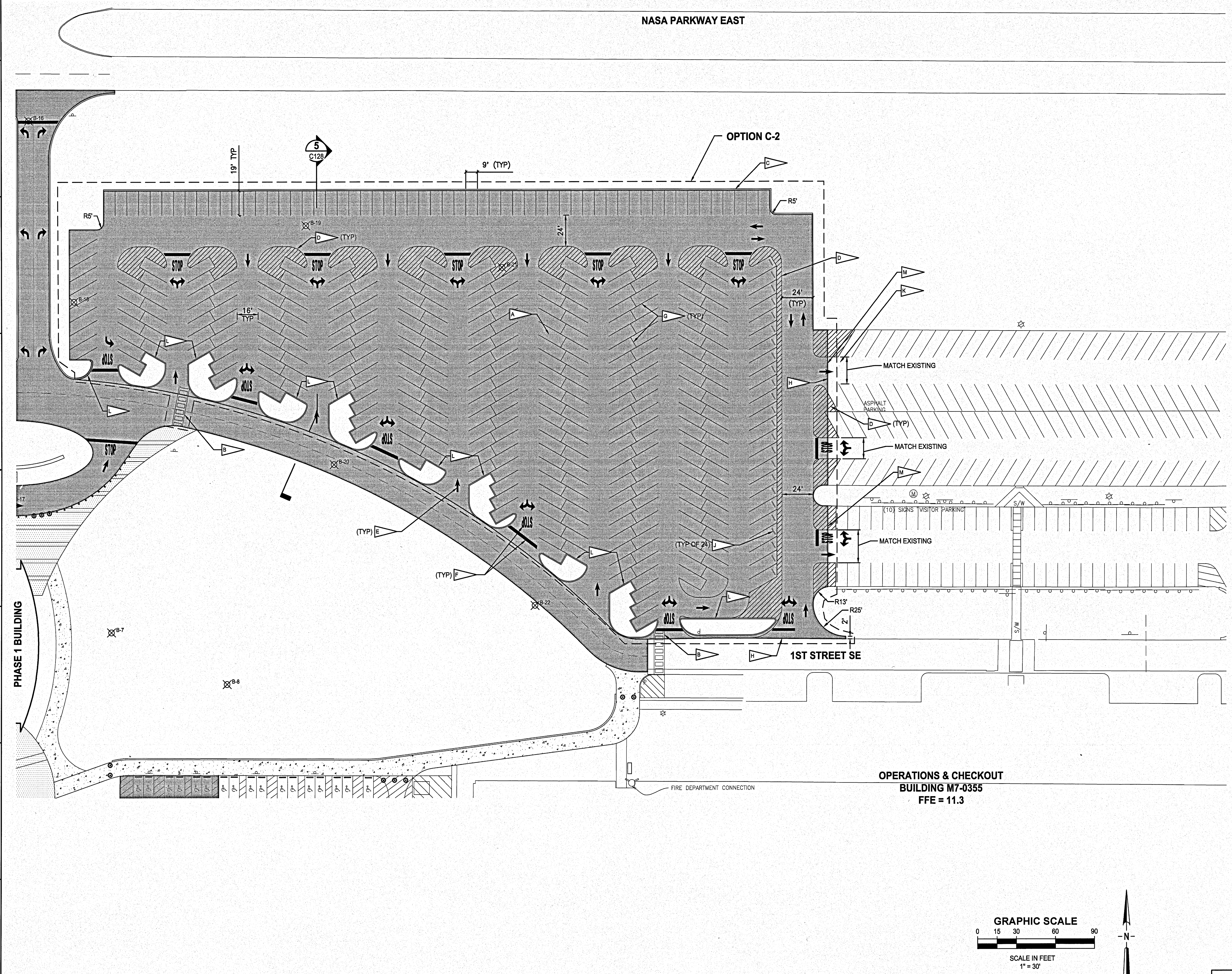

NOTES

- A: 9'x19' ANGLED PARKING SPACES. SEE DETAIL 1/C115
- B: 12" WHITE CROSSWALK PAVEMENT MARKINGS PER FDOT SI 17346
- C: CONCRETE CURB. SEE DETAIL 3/C201
- D: 4" YELLOW 60° STRIPING 12" OC
- E: TRAFFIC FLOW ARROW PER FDOT SI 17346
- F: STOP BAR, "STOP", TRAFFIC FLOW ARROW PER FDOT SI 17346
- G: 4" WHITE PAVEMENT MARKING
- H: TIE INTO EXISTING PAVEMENT. SEE SECTION 2/C202
- J: CONCRETE WHEEL STOP. SEE DETAIL 4/C201
- K: HYDRO-BLAST EXISTING PAVEMENT MARKINGS THAT CONFLICT WITH NEW TRAFFIC PATTERN
- L: TYPE D CURB PER FDOT SI 300
- M: BUTT JOINT. SEE DETAIL 6/C201

SYM	ZONE	REVISIONS	DATE	APPROVED

JONES EDMUNDS
730 NE WALDO ROAD, GAINESVILLE, FLORIDA 32641 / (352) 377-5821
3910 S WASHINGTON AVE, SUITE 210, TITUSVILLE, FLORIDA 32780 / (321) 269-2950

SIGNATURES	DATE
DRAWN P. UPSTILL	12.18.13
CHECKED M. O'BRIEN	12.18.13
SUBMITTED: ARCH/ENG OF RECORD W. NICKEL	12/18/13
ST of LICENSURE: FL LICENSE NO: 68638	
APPROVED R. KOLLER	12/18/13
K. MILLER	12/19/13

NATIONAL AERONAUTICS AND SPACE ADMINISTRATION
JOHN F. KENNEDY SPACE CENTER, NASA
KENNEDY SPACE CENTER, FLORIDA

KSC CENTRAL CAMPUS
REPLACEMENT HEADQUARTERS BUILDING
PHASE 1
VOL. 1 OF 4

SITE PLAN - OPTION C-2

FILE NO.	SIZE	DWG. NO.
C-12070.00	F	79K39622 VOL 1

PCN. NO. 98745.1a

SHEET 39

C119

KSC FORM 1-11 (3/76)(C/G 3/94)

NOTICE: When Government drawings, specifications, or other data are used for any purpose other than in connection with a definitely related Government procurement operation, the United States Government thereby incurs no responsibility nor obligation whatsoever; and the fact that the Government may have formulated, furnished, or in any way supplied the said drawings, specifications or other data is not to be regarded by implication or otherwise as in any manner licensing the holder or any other person or corporation, or conveying any rights or permission to manufacture, use, or sell any patented invention that may in any way be related thereto.

EDGE OF PAVEMENT COORDINATE TABLE

POINT	NORTHING	EASTING	DESCRIPTION
1	1523836.99	769121.83	EDGE OF PAVEMENT
2	1523872.44	769102.22	EDGE OF PAVEMENT
3	1524007.33	769102.22	EDGE OF PAVEMENT
4	1524057.34	769153.12	EDGE OF PAVEMENT
5	1524059.34	769153.10	EDGE OF PAVEMENT
6	1524060.27	769006.57	EDGE OF PAVEMENT
7	1524058.27	769006.57	EDGE OF PAVEMENT
8	1524008.27	769056.22	EDGE OF PAVEMENT
9	1523882.55	769056.22	EDGE OF PAVEMENT
10	1523854.42	769068.22	EDGE OF PAVEMENT
11	1523854.42	769078.22	EDGE OF PAVEMENT
12	1524035.90	769078.22	EDGE OF PAVEMENT
13	1524035.90	769068.22	EDGE OF PAVEMENT
14	1523838.70	769030.24	EDGE OF PAVEMENT
15	1523836.89	769024.05	EDGE OF PAVEMENT
16	1523836.69	769021.23	EDGE OF PAVEMENT
17	1523850.30	769007.32	EDGE OF PAVEMENT
18	1523852.20	769009.31	EDGE OF PAVEMENT
19	1523852.20	769028.55	EDGE OF PAVEMENT
20	1523951.98	769028.55	EDGE OF PAVEMENT
21	1523951.98	769011.31	EDGE OF PAVEMENT
22	1523961.98	769001.31	EDGE OF PAVEMENT
23	1523981.89	769001.31	EDGE OF PAVEMENT
24	1523981.89	768452.31	EDGE OF PAVEMENT
25	1523967.89	768452.31	EDGE OF PAVEMENT
26	1523962.89	768447.31	EDGE OF PAVEMENT
27	1523962.89	768422.05	EDGE OF PAVEMENT
28	1523798.01	768422.05	EDGE OF PAVEMENT
29	1523798.01	768440.35	EDGE OF PAVEMENT
30	1523793.50	768442.94	EDGE OF PAVEMENT
31	1523788.56	768434.31	EDGE OF PAVEMENT
32	1523788.56	768433.31	EDGE OF PAVEMENT
33	1523786.56	768433.30	EDGE OF PAVEMENT
34	1523786.31	768465.64	EDGE OF PAVEMENT
35	1523707.62	768466.91	EDGE OF PAVEMENT
36	1523683.30	768447.05	EDGE OF PAVEMENT
37	1523663.36	768447.05	EDGE OF PAVEMENT
38	1523643.36	768427.08	EDGE OF PAVEMENT
39	1523619.66	768427.04	EDGE OF PAVEMENT
40	1523616.65	768424.80	EDGE OF PAVEMENT
41	1523613.24	768424.78	EDGE OF PAVEMENT
42	1523600.81	768434.43	EDGE OF PAVEMENT
43	1523589.28	768440.31	EDGE OF PAVEMENT
44	1523576.50	768457.43	EDGE OF PAVEMENT
45	1523575.81	768463.80	EDGE OF PAVEMENT
46	1523573.70	768463.68	EDGE OF PAVEMENT
47	1523572.79	768611.87	EDGE OF PAVEMENT
48	1523574.44	768623.36	EDGE OF PAVEMENT
49	1523612.95	768648.58	EDGE OF PAVEMENT
50	1523619.89	768579.93	EDGE OF PAVEMENT
51	1523619.77	768540.41	EDGE OF PAVEMENT
52	1523643.76	768540.41	EDGE OF PAVEMENT
53	1523644.73	768582.61	EDGE OF PAVEMENT
54	1523666.99	768605.30	EDGE OF PAVEMENT
55	1523691.49	768605.30	EDGE OF PAVEMENT
56	1523691.49	768629.63	EDGE OF PAVEMENT
57	1523689.85	768661.90	EDGE OF PAVEMENT
58	1523671.41	768677.25	EDGE OF PAVEMENT
59	1523693.08	768704.86	EDGE OF PAVEMENT
60	1523800.38	768941.70	EDGE OF PAVEMENT
61	1523705.22	768730.84	EDGE OF PAVEMENT
62	1523689.64	768741.73	EDGE OF PAVEMENT
63	1523790.58	768921.46	EDGE OF PAVEMENT
64	1523772.03	768926.22	EDGE OF PAVEMENT
65	1523786.27	768977.86	EDGE OF PAVEMENT

EDGE OF PAVEMENT COORDINATE TABLE

POINT	NORTHING	EASTING	DESCRIPTION
66	1523765.02	768992.74	EDGE OF PAVEMENT
67	1523734.43	769045.71	EDGE OF PAVEMENT
68	1523734.43	769100.71	EDGE OF PAVEMENT
69	1523766.13	769154.59	EDGE OF PAVEMENT
70	1523786.40	769168.79	EDGE OF PAVEMENT
71	1523800.52	769204.91	EDGE OF PAVEMENT
72	1523780.12	769010.60	EDGE OF PAVEMENT
73	1523755.27	769073.22	EDGE OF PAVEMENT
74	1523780.27	769135.86	EDGE OF PAVEMENT
75	1523805.35	769073.62	EDGE OF PAVEMENT
76	1523785.05	769262.50	EDGE OF PAVEMENT
77	1523693.08	769442.39	EDGE OF PAVEMENT
78	1523627.61	769517.89	EDGE OF PAVEMENT
79	1523611.37	769556.20	EDGE OF PAVEMENT
80	1523611.37	769562.95	EDGE OF PAVEMENT
81	1523636.48	769562.95	EDGE OF PAVEMENT
82	1523636.48	769555.41	EDGE OF PAVEMENT
83	1523645.45	769534.01	EDGE OF PAVEMENT
84	1523712.44	769456.57	EDGE OF PAVEMENT
85	1523220.41	769056.88	EDGE OF PAVEMENT
86	1523220.29	769080.70	EDGE OF PAVEMENT
87	1523285.48	769091.11	EDGE OF PAVEMENT
88	1523285.48	769127.51	EDGE OF PAVEMENT
89	1523315.27	769127.51	EDGE OF PAVEMENT
90	1523315.27	769232.93	EDGE OF PAVEMENT
91	1523532.06	769232.93	EDGE OF PAVEMENT
92	1523531.66	769157.00	EDGE OF PAVEMENT
93	1523514.29	769156.93	EDGE OF PAVEMENT
94	1523494.29	769136.70	EDGE OF PAVEMENT
95	1523397.79	769136.70	EDGE OF PAVEMENT
96	1523387.79	769126.70	EDGE OF PAVEMENT
97	1523387.85	769086.67	EDGE OF PAVEMENT
98	1523392.87	769081.67	EDGE OF PAVEMENT
99	1523416.83	769081.81	EDGE OF PAVEMENT
100	1523416.85	769024.55	EDGE OF PAVEMENT
101	1523407.03	769025.88	EDGE OF PAVEMENT
102	1523282.41	769025.61	EDGE OF PAVEMENT
103	1523273.35	769041.93	EDGE OF PAVEMENT
104	1523315.10	769015.57	EDGE OF PAVEMENT
105	1523333.50	769057.34	EDGE OF PAVEMENT
106	1523355.86	769057.46	EDGE OF PAVEMENT
107	1523374.73	769015.90	EDGE OF PAVEMENT

EDGE OF CONCRETE COORDINATE TABLE

POINT	NORTHING	EASTING	DESCRIPTION
200	1523683.22	768654.06	EDGE OF CONCRETE
201	1523647.17	768649.84	EDGE OF CONCRETE
202	1523631.64	768668.05	EDGE OF CONCRETE
203	1523611.59	768654.83	EDGE OF CONCRETE
204	1523569.31	768627.17	EDGE OF CONCRETE
205	1523568.88	768626.90	EDGE OF CONCRETE
206	1523566.97	768613.53	EDGE OF CONCRETE
207	1523555.44	768627.17	EDGE OF CONCRETE
208	1523555.43	768752.93	EDGE OF CONCRETE
209	1523670.82	769089.53	EDGE OF CONCRETE
210	1523646.92	768764.88	EDGE OF CONCRETE
211	1523646.43	769569.40	EDGE OF CONCRETE
212	1523641.43	769574.40	EDGE OF CONCRETE
213	1523637.09	769574.40	EDGE OF CONCRETE
214	1523637.16	769569.40	EDGE OF CONCRETE
215	1523646.92	768678.01	EDGE OF CONCRETE
216	1523652.64	768664.69	EDGE OF CONCRETE
217	1523687.63	768707.58	EDGE OF CONCRETE
218	1523668.49	768722.06	EDGE OF CONCRETE
219	1523692.07	768711.83	EDGE OF CONCRETE
220	1523762.30	768913.18	EDGE OF CONCRETE
221	1523764.51	768921.18	EDGE OF CONCRETE
222	1523767.68	768933.53	EDGE OF CONCRETE
223	1523790.93	768927.57	EDGE OF CONCRETE
224	1523793.63	768938.97	EDGE OF CONCRETE
225	1523797.81	768930.46	EDGE OF CONCRETE
226	1523796.52	768925.14	EDGE OF CONCRETE
227	1523680.99	769045.64	EDGE OF CONCRETE
228	1523671.01	769049.68	EDGE OF CONCRETE
229	1523670.82	769096.77	EDGE OF CONCRETE
230	1523680.47	769100.67	EDGE OF CONCRETE
231	1523695.93	769108.24	EDGE OF CONCRETE
232	1523797.92	769216.31	EDGE OF CONCRETE
233	1523617.46	769531.57	EDGE OF CONCRETE
234	1523615.69	769530.65	EDGE OF CONCRETE
235	1523602.38	769538.73	EDGE OF CONCRETE
236	1523590.00	769538.73	EDGE OF CONCRETE
237	1523565.22	769516.98	EDGE OF CONCRETE
238	1523609.40	769562.96	EDGE OF CONCRETE
239	1523609.38	769566.79	EDGE OF CONCRETE
240	1523599.38	769556.73	EDGE OF CONCRETE
241	1523580.27	769556.73	EDGE OF CONCRETE
242	1523555.48	769534.99	EDGE OF CONCRETE
243	1523537.42	769397.67	EDGE OF CONCRETE
244	1523531.61	769384.66	EDGE OF CONCRETE
245	1523544.02	769355.83	EDGE OF CONCRETE
246	1523543.64	769349.80	EDGE OF CONCRETE
247	1523544.30	769164.79	EDGE OF CONCRETE
248	1523540.96	769145.35	EDGE OF CONCRETE
249	1523529.66	769149.40	EDGE OF CONCRETE
250	1523573.43	769110.24	EDGE OF CONCRETE
251	1523559.55	769091.99	EDGE OF CONCRETE
252	1523535.71	769130.72	EDGE OF CONCRETE
253	1523526.84	769105.99	EDGE OF CONCRETE
254	1523514.38	769106.79	EDGE OF CONCRETE
255	1523475.23	769093.90	EDGE OF CONCRETE
256	1523428.85	769029.99	EDGE OF CONCRETE
257	1523428.85	768960.83	EDGE OF CONCRETE
258	1523457.40	768916.91	EDGE OF CONCRETE
259	1523462.44	768913.49	EDGE OF CONCRETE
260	1523491.33	768903.38	EDGE OF CONCRETE
261	1523497.42	768902.91	EDGE OF CONCRETE
262	1523496.80	768900.60	EDGE OF CONCRETE
263	1523503.75	768887.04	EDGE OF CONCRETE
264	1523515.74	768904.66	EDGE OF CONCRETE

EDGE OF CONCRETE COORDINATE TABLE

POINT	NORTHING	EASTING	DESCRIPTION
265	1523535.68	768912.55	EDGE OF CONCRETE
266	1523515.74	768764.93	EDGE OF CONCRETE
267	1523503.74	768794.88	EDGE OF CONCRETE
268	1523473.74	768764.88	EDGE OF CONCRETE
269	1523460.43	768764.88	EDGE OF CONCRETE
270	1523454.31	768765.22	EDGE OF CONCRETE
271	1523428.84	768794.88	EDGE OF CONCRETE
272	1523458.84	768752.88	EDGE OF CONCRETE
273	1523416.84	768794.88	EDGE OF CONCRETE
274	1523428.85	768878.73	EDGE OF CONCRETE
275	1523428.85	768887.37	EDGE OF CONCRETE
276	1523416.85	768901.89	EDGE OF CONCRETE
277	1523414.25	768901.89	EDGE OF CONCRETE
278	1523414.12	768917.33	EDGE OF CONCRETE
279	1523416.85	768917.33	EDGE OF CONCRETE
280	1523416.85	768946.81	EDGE OF CONCRETE
281	1523412.85	768947.23	EDGE OF CONCRETE
282	1523412.30	768955.38	EDGE OF CONCRETE
283	1523416.85	768955.38	EDGE OF CONCRETE
284	1523416.85	768973.47	EDGE OF CONCRETE
285	1523416.85	768979.47	EDGE OF CONCRETE
286	1523357.80	768973.47	EDGE OF CONCRETE
287	1523357.80	768969.93	EDGE OF CONCRETE
288	1523332.98	768969.76	EDGE OF CONCRETE
289	1523332.96	768973.25	EDGE OF CONCRETE
290	1523276.47	769024.56	EDGE OF CONCRETE
291	1523243.89	769048.84	EDGE OF CONCRETE
292	1523220.41	769048.84	EDGE OF CONCRETE
293	1523220.41	769054.88	EDGE OF CONCRETE
294	1523243.88	769054.88	EDGE OF CONCRETE
295	1523253.81	769056.88	EDGE OF CONCRETE
296	1523270.15	769054.61	EDGE OF CONCRETE
297	1523311.04	769043.04	EDGE OF CONCRETE
298	1523309.92	769040.24	EDGE OF CONCRETE
299	1523272.23	769050.90	EDGE OF CONCRETE
300	1523270.42	769047.43	EDGE OF CONCRETE
301	1523416.85	769114.24	EDGE OF CONCRETE
302	1523406.00	769125.98	EDGE OF CONCRETE
303	1523405.97	769136.70	EDGE OF CONCRETE
304	1523411.97	769136.70	EDGE OF CONCRETE
305	1523411.99	769128.34	EDGE OF CONCRETE
306	1523428.85	769110.10	EDGE OF CONCRETE
307	1523777.60	769034.07	EDGE OF CONCRETE
308	1523769.19	769073.63	EDGE OF CONCRETE
309	1523777.60	769113.18	EDGE OF CONCRETE
310	1523570.02	769082.08	EDGE OF CONCRETE
311	1523646.43	769595.56	EDGE OF CONCRETE
312	1523688.90	769595.56	EDGE OF CONCRETE
313	1523754.35	769652.25	EDGE OF CONCRETE
314	1523754.39	769658.90	EDGE OF CONCRETE
315	1523687.03	769600.56	EDGE OF CONCRETE
316	1523641.43	769600.56	EDGE OF CONCRETE

BORING LOCATION TABLE

POINT #	LATITUDE	LONGITUDE
B-8	N028° 31' 28.58"	W080° 38' 52.35"
B-16	N028° 31' 32.88"	W080° 38' 54.05"
B-1	N028° 31' 28.31"	W080° 38' 57.42"
B-9	N028° 31' 32.10"	W080° 39' 00.50"
B-17	N028° 31' 29.98"	W080° 38' 54.22"
B-2	N028° 31' 29.04"	W080° 38' 56.68"
B-10	N028° 31' 29.28"	W080° 39' 00.48"
B-18	N028° 31' 31.50"	W080° 38' 53.66"
B-3	N028° 31' 28.32"	W080° 38' 55.92"
B-11	N028° 31' 29.77"	W080° 38' 58.85"
B-19	N028° 31' 32.07"	W080° 38' 51.66"
B-4	N028° 31' 29.06"	W080° 38' 55.11"
B-12	N028° 31' 28.20"	W080° 38' 58.85"
B-20	N028° 31' 30.25"	W080° 38' 51.42"
B-5	N028° 31' 27.62"	W080° 38' 55.10"
B-13	N028° 31' 32.04"	W080° 38' 57.73"
B-21	N028° 31' 31.75"	W080° 38' 49.96"
B-6	N028° 31' 28.33"	W080° 38' 54.34"
B-14	N028° 31' 31.50"	W080° 38' 54.61"
B-22	N028° 31' 29.17"	W080° 38' 49.69"
B-7	N028° 31' 28.98"	W080° 38' 53.35"
B-15	N028° 31' 25.98"	W080° 38' 54.71"

SYM	ZONE	REVISIONS	DATE	APPROVED

JONES EDMUNDS
730 NE WALDO ROAD, GAINESVILLE, FLORIDA 32641 / (352) 377-5821
3910 S WASHINGTON AVE, SUITE 210, TITUSVILLE, FLORIDA 32780 / (321) 269-2950

SIGNATURES	DATE
DRAWN P. UPSTILL	12.18.13
CHECKED M. O'BRIEN	12.18.13
SUBMITTED: ARCH/ENG OF RECORD W. NICKEL	12/18/13
ST of LICENSURE: FL LICENSE NO: 68638	
APPROVED R. KOLLER	12/18/13
K. MILLER	12/19/13

NATIONAL AERONAUTICS AND SPACE ADMINISTRATION
JOHN F. KENNEDY SPACE CENTER, NASA
KENNEDY SPACE CENTER, FLORIDA

KSC CENTRAL CAMPUS
REPLACEMENT HEADQUARTERS BUILDING
PHASE 1
VOL. 1 OF 4

COORDINATE TABLES

FILE NO. C-12070.00 | SIZE F | DWG. NO. 79K39622 VOL 1
PCN. NO. 98745.1a | SHEET 40

C120

NOTICE: When Government drawings, specifications, or other data are used for any purpose other than in connection with a definitely related Government procurement operation, the United States Government thereby incurs no responsibility nor obligation whatsoever; and the fact that the Government may have formulated, furnished, or in any way supplied the said drawings, specifications or other data is not to be regarded by implication or otherwise as in any manner licensing the holder or any other person or corporation, or conveying any rights or permission to manufacture, use, or sell any patented invention that may in any way be related thereto.

FACE OF CURB/ISLAND COORDINATE TABLE

POINT	NORTHING	EASTING	DESCRIPTION
400	1523673.41	768471.05	FACE OF CURB
401	1523653.73	768471.05	FACE OF CURB
402	1523643.73	768481.05	FACE OF CURB
403	1523643.73	768482.30	FACE OF CURB
404	1523658.73	768497.30	FACE OF CURB
405	1523661.72	768497.30	FACE OF CURB
406	1523675.14	768474.05	FACE OF CURB
407	1523662.37	768514.43	FACE OF CURB
408	1523660.92	768513.45	FACE OF CURB
409	1523643.79	768528.19	FACE OF CURB
410	1523643.73	768536.19	FACE OF CURB
411	1523658.73	768551.30	FACE OF CURB
412	1523659.41	768551.30	FACE OF CURB
413	1523661.14	768548.30	FACE OF CURB
414	1523653.20	768534.55	FACE OF CURB
415	1523660.99	768530.05	FACE OF CURB
416	1523663.59	768534.55	FACE OF CURB
417	1523671.39	768530.05	FACE OF CURB
418	1523659.35	768567.30	FACE OF CURB
419	1523661.03	768570.48	FACE OF CURB
420	1523653.20	768584.05	FACE OF CURB
421	1523660.99	768588.55	FACE OF CURB
422	1523663.59	768584.05	FACE OF CURB
423	1523671.39	768588.55	FACE OF CURB
424	1523673.98	768584.05	FACE OF CURB
425	1523681.78	768588.55	FACE OF CURB
426	1523672.69	768604.30	FACE OF CURB
427	1523670.95	768605.30	FACE OF CURB
428	1523693.63	768630.58	FACE OF CURB
429	1523702.56	768646.05	FACE OF CURB
430	1523694.77	768650.55	FACE OF CURB
431	1523702.92	768664.67	FACE OF CURB
432	1523701.35	768667.30	FACE OF CURB
433	1523733.20	768687.52	FACE OF CURB
434	1523730.64	768684.70	FACE OF CURB
435	1523724.53	768706.84	FACE OF CURB
436	1523729.83	768714.66	FACE OF CURB
437	1523742.31	768721.34	FACE OF CURB
438	1523754.09	768721.34	FACE OF CURB
439	1523755.82	768720.34	FACE OF CURB
440	1523764.92	768704.59	FACE OF CURB
441	1523757.12	768700.09	FACE OF CURB
442	1523754.52	768704.59	FACE OF CURB
443	1523746.73	768700.09	FACE OF CURB
444	1523744.13	768704.59	FACE OF CURB
445	1523736.34	768700.09	FACE OF CURB
446	1523733.74	768704.59	FACE OF CURB
447	1523725.95	768700.09	FACE OF CURB
448	1523766.85	768739.44	FACE OF CURB
449	1523764.31	768738.61	FACE OF CURB
450	1523757.25	768759.62	FACE OF CURB
451	1523761.52	768767.44	FACE OF CURB
452	1523773.54	768775.29	FACE OF CURB
453	1523775.43	768772.29	FACE OF CURB
454	1523767.51	768758.59	FACE OF CURB
455	1523775.31	768754.09	FACE OF CURB
456	1523796.05	768794.67	FACE OF CURB
457	1523793.87	768791.72	FACE OF CURB
458	1523783.51	768812.40	FACE OF CURB
459	1523786.90	768820.22	FACE OF CURB
460	1523800.70	768829.34	FACE OF CURB
461	1523816.45	768829.34	FACE OF CURB
462	1523818.18	768828.34	FACE OF CURB
463	1523827.27	768812.59	FACE OF CURB
464	1523819.48	768808.09	FACE OF CURB

FACE OF CURB/ISLAND COORDINATE TABLE

POINT	NORTHING	EASTING	DESCRIPTION
465	1523816.88	768812.59	FACE OF CURB
466	1523809.08	768808.09	FACE OF CURB
467	1523806.49	768812.59	FACE OF CURB
468	1523798.69	768808.09	FACE OF CURB
469	1523796.09	768812.59	FACE OF CURB
470	1523788.30	768808.09	FACE OF CURB
471	1523818.25	768846.46	FACE OF CURB
472	1523816.24	768845.48	FACE OF CURB
473	1523804.12	768865.18	FACE OF CURB
474	1523806.74	768873.00	FACE OF CURB
475	1523820.99	768883.34	FACE OF CURB
476	1523825.68	768883.34	FACE OF CURB
477	1523827.41	768880.34	FACE OF CURB
478	1523819.48	768866.59	FACE OF CURB
479	1523827.27	768862.09	FACE OF CURB
480	1523835.96	768899.34	FACE OF CURB
481	1523834.22	768899.34	FACE OF CURB
482	1523819.66	768917.96	FACE OF CURB
483	1523821.55	768925.78	FACE OF CURB
484	1523836.15	768937.34	FACE OF CURB
485	1523837.23	768937.34	FACE OF CURB
486	1523838.96	768936.34	FACE OF CURB
487	1523848.06	768920.59	FACE OF CURB
488	1523840.26	768916.09	FACE OF CURB
489	1523837.66	768920.59	FACE OF CURB
490	1523829.87	768916.09	FACE OF CURB
491	1523837.81	768902.34	FACE OF CURB
492	1523849.93	768955.34	FACE OF CURB
493	1523848.20	768954.34	FACE OF CURB
494	1523845.45	768954.34	FACE OF CURB
495	1523830.64	768971.71	FACE OF CURB
496	1523831.70	768978.56	FACE OF CURB
497	1523846.54	768991.34	FACE OF CURB
498	1523848.20	768988.34	FACE OF CURB
499	1523840.26	768974.59	FACE OF CURB
500	1523848.06	768970.09	FACE OF CURB
501	1523850.65	768974.59	FACE OF CURB
502	1523858.45	768970.09	FACE OF CURB
506	1523238.62	769080.80	FACE OF CURB
507	1523231.16	769083.28	FACE OF CURB
508	1523225.57	769090.60	FACE OF CURB
509	1523225.57	769092.62	FACE OF CURB
510	1523238.57	769092.66	FACE OF CURB
511	1523243.59	769087.68	FACE OF CURB
512	1523243.59	769085.82	FACE OF CURB
513	1523272.62	769080.99	FACE OF CURB
514	1523272.57	769091.04	FACE OF CURB
515	1523298.57	769091.15	FACE OF CURB
516	1523298.62	769081.14	FACE OF CURB
517	1523332.61	769081.33	FACE OF CURB
518	1523327.58	769086.31	FACE OF CURB
519	1523327.57	769088.56	FACE OF CURB
520	1523332.55	769093.58	FACE OF CURB
521	1523358.55	769093.65	FACE OF CURB
522	1523363.57	769088.67	FACE OF CURB
523	1523363.58	769086.50	FACE OF CURB
524	1523358.61	769081.48	FACE OF CURB

CORNER OF BUILDING COORDINATE TABLE

POINT	NORTHING	EASTING	DESCRIPTION
601	1523577.68	769015.60	BUILDING CORNER
602	1523671.01	768920.85	BUILDING CORNER
603	1523654.03	768764.93	BUILDING CORNER
604	1523535.68	768764.93	BUILDING CORNER
605	1523535.68	768916.60	BUILDING CORNER
606	1523536.84	768953.26	BUILDING CORNER

STORMWATER SYSTEM COORDINATE TABLE

POINT	NORTHING	EASTING	DESCRIPTION
700	1523803.79	768505.14	STRUCTURE
701	1523930.90	768505.14	STRUCTURE
702	1523930.69	768729.57	STRUCTURE
703	1523930.73	768891.57	STRUCTURE
704	1523975.13	769042.38	STRUCTURE
705	1523791.86	768916.82	STRUCTURE
706	1523738.76	768964.82	STRUCTURE
707	1523780.25	769022.60	STRUCTURE
708	1523780.25	769073.23	STRUCTURE
709	1523780.25	769123.86	STRUCTURE
710	1523756.49	769205.53	STRUCTURE
711	1523899.35	769200.61	STRUCTURE
712	1523976.63	769122.22	STRUCTURE
713	1524014.50	769128.84	STRUCTURE
714	1523663.22	768385.06	STRUCTURE
715	1523699.68	768560.29	STRUCTURE
716	1523615.83	768561.53	STRUCTURE
717	1523614.03	768675.59	STRUCTURE
718	1523557.23	768569.62	STUB
719	1523732.56	768677.32	STRUCTURE
720	1523696.75	768714.25	STRUCTURE
721	1523695.61	768780.07	FITTING
722	1523717.23	768819.72	FITTING
723	1523717.23	768829.36	FITTING
724	1523710.17	768836.42	FITTING
725	1523717.23	768875.80	FITTING
726	1523710.13	768882.90	FITTING
727	1523709.24	768935.11	FITTING
728	1523685.28	768953.37	FITTING
729	1523719.29	768990.77	FITTING
730	1523681.81	769039.76	FITTING
731	1523719.29	769066.19	FITTING
732	1523712.22	769073.26	FITTING
733	1523561.52	769114.46	STRUCTURE
734	1523899.52	769470.90	STRUCTURE
735	1523899.22	769633.63	STRUCTURE
736	1523614.47	769415.76	STRUCTURE
737	1523681.67	769579.51	STRUCTURE
738	1523652.40	769720.02	STRUCTURE
739	1523657.62	769946.33	STRUCTURE
740	1523663.96	770050.83	STRUCTURE
741	1523667.98	770080.44	STRUCTURE
742	1523455.17	769109.73	STRUCTURE
743	1523472.12	769213.45	STRUCTURE
744	1523348.70	769213.57	STRUCTURE
745	1523192.11	769213.48	STRUCTURE
746	1523139.16	769018.06	STRUCTURE
747	1523225.29	769012.57	STRUCTURE
748	1523344.82	769032.40	STRUCTURE
749	1523399.38	768993.46	FITTING
750	1523394.06	768993.46	STRUCTURE
751	1523530.00	769073.25	FITTING
752	1523470.21	768900.79	STRUCTURE
753	1523525.75	768831.24	STRUCTURE
754	1523481.53	768790.74	STRUCTURE
755	1523454.59	768813.51	STRUCTURE
756	1523440.21	768910.61	STRUCTURE
757	1523373.29	768800.92	STRUCTURE
758	1523278.15	768831.18	STRUCTURE
759	1523227.88	768829.28	STRUCTURE
760	1523899.22	769715.89	STRUCTURE
761	1523687.82	769615.15	STRUCTURE
762	1523689.16	769583.80	STRUCTURE

SANITARY SEWER COORDINATE TABLE

POINT	NORTHING	EASTING	DESCRIPTION
800	1523529.65	768781.03	CLEANOUT
801	1523528.02	768784.93	FITTING
802	1523492.49	768869.15	MANHOLE
803	1523518.27	768852.16	FITTING
804	1523524.59	768858.71	GREASE TRAP
805	1523525.66	768905.83	CLEANOUT
806	1523420.41	769000.07	MANHOLE
807	1523501.11	769000.07	FITTING
808	1523539.26	768961.93	FITTING
809	1523519.55	769152.08	MANHOLE
810	1523563.62	769152.08	CLEANOUT
811	1523556.28	769400.93	MANHOLE

WATER LINE COORDINATE TABLE

POINT	NORTHING	EASTING	DESCRIPTION
900	1523650.88	768724.28	FITTING
901	1523650.88	768713.92	BACKFLOW PREVENTER
902	1523650.88	768698.37	FITTING
903	1523680.32	768698.37	FITTING
904	1523680.35	768705.30	FIRE HYDRANT
905	1523921.80	768698.37	FITTING
906	1523958.18	768734.75	FITTING
907	1523987.75	768734.75	FITTING
908	1523433.77	768990.02	FITTING
909	1523450.99	768990.02	FITTING
910	1523450.99	768822.39	FITTING
911	1523450.99	768801.89	FITTING
912	1523494.34	768822.39	FIRE HYDRANT
913	1523496.90	768801.83	BACKFLOW PREVENTER

SYM	ZONE		DATE	APPROVED

REVISIONS

JONES EDMUNDS
730 NE WALDO ROAD, GAINESVILLE, FLORIDA 32641 / (352) 377-5821
3910 S WASHINGTON AVE, SUITE 210, TITUSVILLE, FLORIDA 32780 / (321) 269-2950

SIGNATURES	DATE
DRAWN P. UPSTILL	12.18.13
CHECKED M. O'BRIEN	12.18.13
SUBMITTED: ARCH/ENG OF RECORD W. NICKEL	12/18/13
ST of LICENSURE: FL LICENSE NO. 68638	
APPROVED R. KOLLER	12/18/13
K. MILLER	12/19/13

NATIONAL AERONAUTICS AND SPACE ADMINISTRATION
JOHN F. KENNEDY SPACE CENTER, NASA
KENNEDY SPACE CENTER, FLORIDA

KSC CENTRAL CAMPUS
REPLACEMENT HEADQUARTERS BUILDING
PHASE 1
VOL. 1 OF 4

COORDINATE TABLES

C121

FILE NO. C-12070.00 | SIZE F | DWG. NO. 79K39622 VOL 1
PCN. NO. 98745.1a | SHEET 41

KSC FORM 1-11 (3/76)(C/G 3/94)

NOTICE: When Government drawings, specifications, or other data are used for any purpose other than in connection with a definitely related Government procurement operation, the United States Government thereby incurs no responsibility nor obligation whatsoever; and the fact that the Government may have formulated, furnished, or in any way supplied the said drawings, specifications or other data is not to be regarded by implication or otherwise as in any manner licensing the holder or any other person or corporation, or conveying any rights or permission to manufacture, use, or sell any patented invention that may in any way be related thereto.

EDGE OF PAVEMENT COORDINATE TABLE OPTION C-2

POINT	NORTHING	EASTING	DESCRIPTION
2000	1523836.99	769121.83	EDGE OF PAVEMENT
2001	1523849.71	769135.84	EDGE OF PAVEMENT
2002	1523851.96	769133.84	EDGE OF PAVEMENT
2003	1523851.96	769117.88	EDGE OF PAVEMENT
2004	1523951.98	769117.86	EDGE OF PAVEMENT
2005	1523951.98	769139.38	EDGE OF PAVEMENT
2006	1523956.98	769144.38	EDGE OF PAVEMENT
2007	1523981.89	769144.38	EDGE OF PAVEMENT
2008	1523981.89	769657.38	EDGE OF PAVEMENT
2009	1523967.89	769657.38	EDGE OF PAVEMENT
2010	1523962.89	769662.38	EDGE OF PAVEMENT
2011	1523962.89	769690.39	EDGE OF PAVEMENT
2012	1523874.15	769690.39	EDGE OF PAVEMENT
2013	1523874.15	769701.39	EDGE OF PAVEMENT
2014	1523754.65	769701.39	EDGE OF PAVEMENT
2015	1523754.65	769698.36	EDGE OF PAVEMENT
2016	1523738.83	769698.21	EDGE OF PAVEMENT
2017	1523738.83	769701.39	EDGE OF PAVEMENT
2018	1523676.63	769701.39	EDGE OF PAVEMENT
2019	1523663.51	769690.39	EDGE OF PAVEMENT
2020	1523638.51	769715.17	EDGE OF PAVEMENT
2021	1523639.16	769641.15	EDGE OF PAVEMENT
2022	1523639.04	769602.36	EDGE OF PAVEMENT
2023	1523636.48	769562.95	EDGE OF PAVEMENT

FACE OF CURB/ISLAND COORDINATE TABLE OPTION C-2

POINT	NORTHING	EASTING	DESCRIPTION
2100	1523831.70	769167.89	FACE OF CURB
2101	1523846.54	769155.11	FACE OF CURB
2102	1523848.20	769158.11	FACE OF CURB
2103	1523840.26	769171.86	FACE OF CURB
2104	1523848.06	769176.36	FACE OF CURB
2105	1523850.65	769171.86	FACE OF CURB
2106	1523858.45	769176.36	FACE OF CURB
2107	1523849.93	769191.11	FACE OF CURB
2108	1523848.20	769192.11	FACE OF CURB
2109	1523845.45	769192.11	FACE OF CURB
2110	1523830.64	769174.73	FACE OF CURB
2111	1523821.55	769220.67	FACE OF CURB
2112	1523836.15	769209.11	FACE OF CURB
2113	1523847.62	769209.11	FACE OF CURB
2114	1523849.35	769210.11	FACE OF CURB
2115	1523858.45	769225.86	FACE OF CURB
2116	1523850.65	769230.36	FACE OF CURB
2117	1523848.06	769225.86	FACE OF CURB
2118	1523840.26	769230.36	FACE OF CURB
2119	1523837.66	769225.86	FACE OF CURB
2120	1523829.87	769230.36	FACE OF CURB
2121	1523837.81	769244.11	FACE OF CURB
2122	1523835.96	769247.11	FACE OF CURB
2123	1523834.22	769247.11	FACE OF CURB
2124	1523819.66	769228.49	FACE OF CURB
2125	1523806.74	769273.45	FACE OF CURB
2126	1523820.99	769263.11	FACE OF CURB
2127	1523825.56	769263.11	FACE OF CURB
2128	1523827.41	769266.11	FACE OF CURB
2129	1523819.48	769279.86	FACE OF CURB
2130	1523827.27	769284.36	FACE OF CURB
2131	1523818.25	769299.98	FACE OF CURB
2132	1523816.24	769300.96	FACE OF CURB
2133	1523804.12	769281.26	FACE OF CURB
2134	1523786.90	769326.22	FACE OF CURB
2135	1523800.70	769317.11	FACE OF CURB
2136	1523817.60	769317.11	FACE OF CURB
2137	1523827.27	769333.86	FACE OF CURB
2138	1523819.48	769338.36	FACE OF CURB
2139	1523816.88	769333.86	FACE OF CURB
2140	1523809.08	769338.36	FACE OF CURB
2141	1523806.49	769333.86	FACE OF CURB
2142	1523798.69	769338.36	FACE OF CURB
2143	1523796.09	769333.86	FACE OF CURB
2144	1523788.30	769338.36	FACE OF CURB
2145	1523796.05	769351.78	FACE OF CURB
2146	1523793.87	769354.73	FACE OF CURB
2147	1523783.51	769334.04	FACE OF CURB
2148	1523761.52	769379.00	FACE OF CURB
2149	1523773.54	769371.15	FACE OF CURB
2150	1523775.43	769374.15	FACE OF CURB
2151	1523767.51	769387.86	FACE OF CURB
2152	1523775.31	769392.36	FACE OF CURB
2153	1523766.85	769407.00	FACE OF CURB
2154	1523764.31	769407.83	FACE OF CURB
2155	1523757.25	769386.82	FACE OF CURB
2156	1523729.83	769431.78	FACE OF CURB
2157	1523742.31	769425.11	FACE OF CURB
2158	1523755.25	769425.11	FACE OF CURB
2159	1523764.92	769441.86	FACE OF CURB
2160	1523757.12	769446.36	FACE OF CURB
2161	1523754.52	769441.86	FACE OF CURB
2162	1523746.73	769446.36	FACE OF CURB
2163	1523744.13	769441.86	FACE OF CURB
2164	1523736.34	769446.36	FACE OF CURB

FACE OF CURB/ISLAND COORDINATE TABLE OPTION C-2

POINT	NORTHING	EASTING	DESCRIPTION
2165	1523733.74	769441.86	FACE OF CURB
2166	1523725.95	769446.36	FACE OF CURB
2167	1523733.20	769458.92	FACE OF CURB
2168	1523730.64	769461.74	FACE OF CURB
2169	1523724.53	769439.60	FACE OF CURB
2170	1523690.69	769484.58	FACE OF CURB
2171	1523700.73	769479.19	FACE OF CURB
2172	1523702.67	769482.18	FACE OF CURB
2173	1523694.77	769495.86	FACE OF CURB
2174	1523702.56	769500.36	FACE OF CURB
2175	1523693.76	769515.61	FACE OF CURB
2176	1523691.48	769516.53	FACE OF CURB
2177	1523684.16	769492.39	FACE OF CURB
2178	1523640.23	769540.88	FACE OF CURB
2179	1523653.35	769533.14	FACE OF CURB
2180	1523670.95	769533.14	FACE OF CURB
2181	1523672.69	769534.14	FACE OF CURB
2182	1523681.78	769549.89	FACE OF CURB
2183	1523673.98	769554.39	FACE OF CURB
2184	1523671.39	769549.89	FACE OF CURB
2185	1523663.59	769554.39	FACE OF CURB
2186	1523660.99	769549.89	FACE OF CURB
2187	1523653.20	769554.39	FACE OF CURB
2188	1523650.60	769549.89	FACE OF CURB
2189	1523642.81	769554.39	FACE OF CURB
2190	1523651.18	769568.90	FACE OF CURB
2191	1523649.90	769571.07	FACE OF CURB
2192	1523637.36	769557.07	FACE OF CURB
2193	1523637.40	769550.14	FACE OF CURB
2194	1523638.32	769545.04	FACE OF CURB
2195	1523649.98	769587.70	FACE OF CURB
2196	1523652.52	769589.63	FACE OF CURB
2197	1523652.52	769659.92	FACE OF CURB
2198	1523649.34	769661.53	FACE OF CURB

STORMWATER SYSTEM COORDINATE TABLE OPTION C-2

POINT	NORTHING	EASTING	DESCRIPTION
2300	1523777.60	769470.90	STRUCTURE
2301	1523777.46	769633.63	STRUCTURE

WATER LINE COORDINATE TABLE OPTION C-2

POINT	NORTHING	EASTING	DESCRIPTION
2400	1523537.16	769549.09	BACKFLOW PREVENTER

OPTION C-2

SYM	ZONE	REVISIONS	DATE	APPROVED

JONES EDMUNDS
730 NE WALDO ROAD, GAINESVILLE, FLORIDA 32641 / (352) 377-5821
3910 S WASHINGTON AVE, SUITE 210, TITUSVILLE, FLORIDA 32780 / (321) 269-2950

SIGNATURES	DATE
DRAWN P. UPSTILL	12.18.13
CHECKED M. O'BRIEN	12.18.13
SUBMITTED: ARCH/ENG OF RECORD W. NICKEL	12/18/13
ST of LICENSURE: FL LICENSE NO: 68638	
APPROVED K. KOLLER	12/18/13
K. MILLER	12/19/13

NATIONAL AERONAUTICS AND SPACE ADMINISTRATION
JOHN F. KENNEDY SPACE CENTER, NASA
KENNEDY SPACE CENTER, FLORIDA

KSC CENTRAL CAMPUS
REPLACEMENT HEADQUARTERS BUILDING
PHASE 1
VOL. 1 OF 4

COORDINATE TABLES

C122

FILE NO. C-12070.00 | SIZE F | DWG. NO. 79K39622 VOL 1

PCN. NO. 98745.1a | SHEET 42

NOTICE: When Government drawings, specifications, or other data are used for any purpose other than in connection with a definitely related Government procurement operation, the United States Government thereby incurs no responsibility nor obligation whatsoever; and the fact that the Government may have formulated, furnished, or in any way supplied the said drawings, specifications or other data is not to be regarded by implication or otherwise as in any manner licensing the holder or any other person or corporation, or conveying any rights or permission to manufacture, use, or sell any patented invention that may in any way be related thereto.

NOTE
SEE C120 AND C121 FOR COORDINATE TABLES.

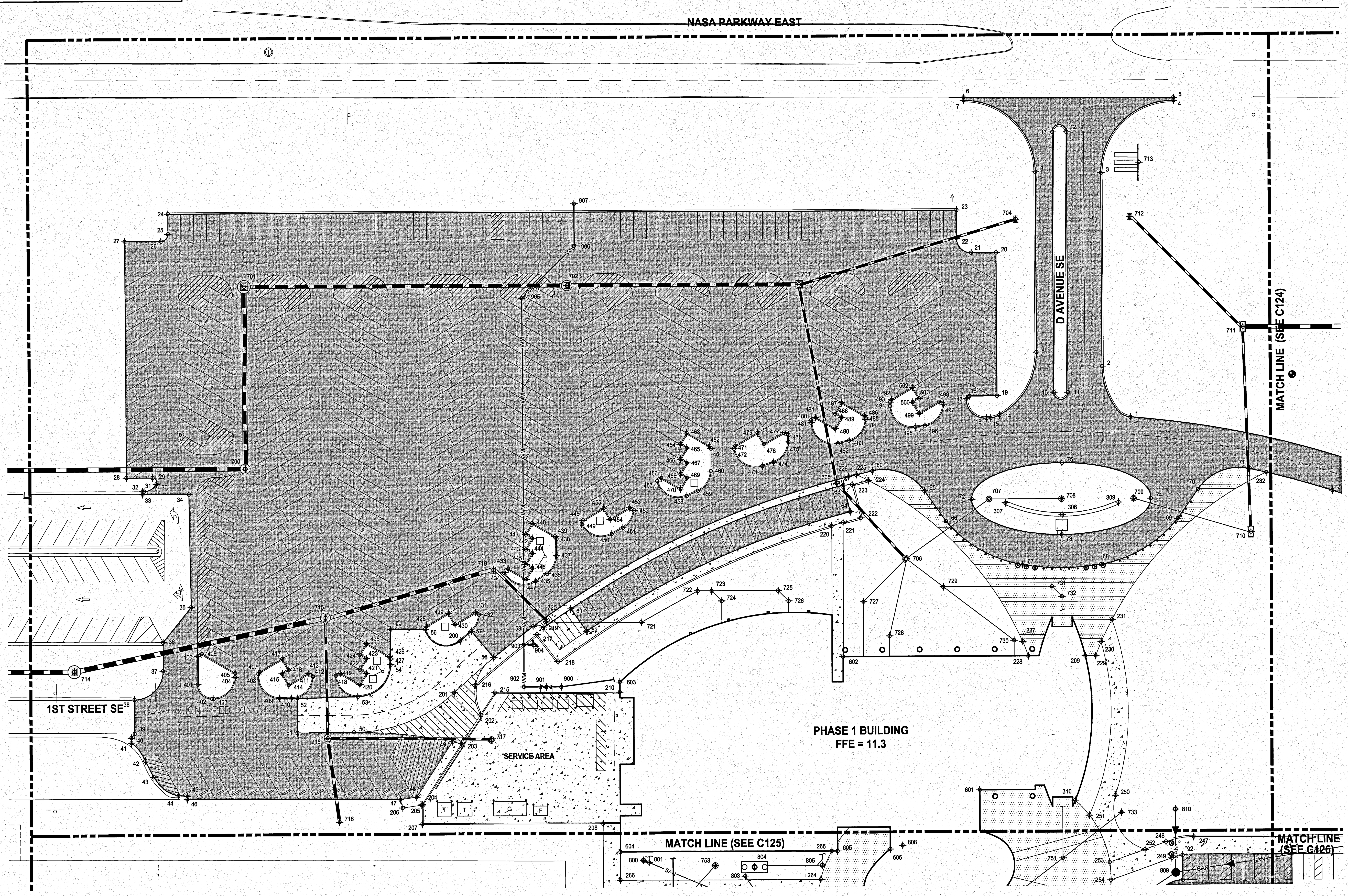

SYM	ZONE	REVISIONS	DATE	APPROVED

JONES EDMUNDS
730 NE WALDO ROAD, GAINESVILLE, FLORIDA 32641 / (352) 377-5821
3910 S WASHINGTON AVE, SUITE 210, TITUSVILLE, FLORIDA 32780 / (321) 269-2950

SIGNATURES	DATE
DRAWN P. UPSTILL	12.18.13
CHECKED M. O'BRIEN	12.18.13
SUBMITTED: ARCH/ENG OF RECORD W. NICKEL	12/18/13
ST of LICENSURE: FL LICENSE NO: 68638	
APPROVED R. KOHLER	12/18/13
K. MILLER	12/19/13

NATIONAL AERONAUTICS AND SPACE ADMINISTRATION
JOHN F. KENNEDY SPACE CENTER, NASA
KENNEDY SPACE CENTER, FLORIDA

KSC CENTRAL CAMPUS
REPLACEMENT HEADQUARTERS BUILDING
PHASE 1
VOL. 1 OF 4

COORDINATE PLAN

C123

FILE NO.	SIZE	DWG. NO.
C-12070.00	F	79K39622 VOL 1

PCN. NO. 98745.1a
SHEET 43

KSC FORM 1-11 (3/76)(C/G 3/94)

NOTICE: When Government drawings, specifications, or other data are used for any purpose other than in connection with a definitely related Government procurement operation, the United States Government thereby incurs no responsibility nor obligation whatsoever; and the fact that the Government may have formulated, furnished, or in any way supplied the said drawings, specifications or other data is not to be regarded by implication or otherwise as in any manner licensing the holder or any other person or corporation, or conveying any rights or permission to manufacture, use, or sell any patented invention that may in any way be related thereto.

NOTE
SEE C120 AND C121 FOR COORDINATE TABLES.

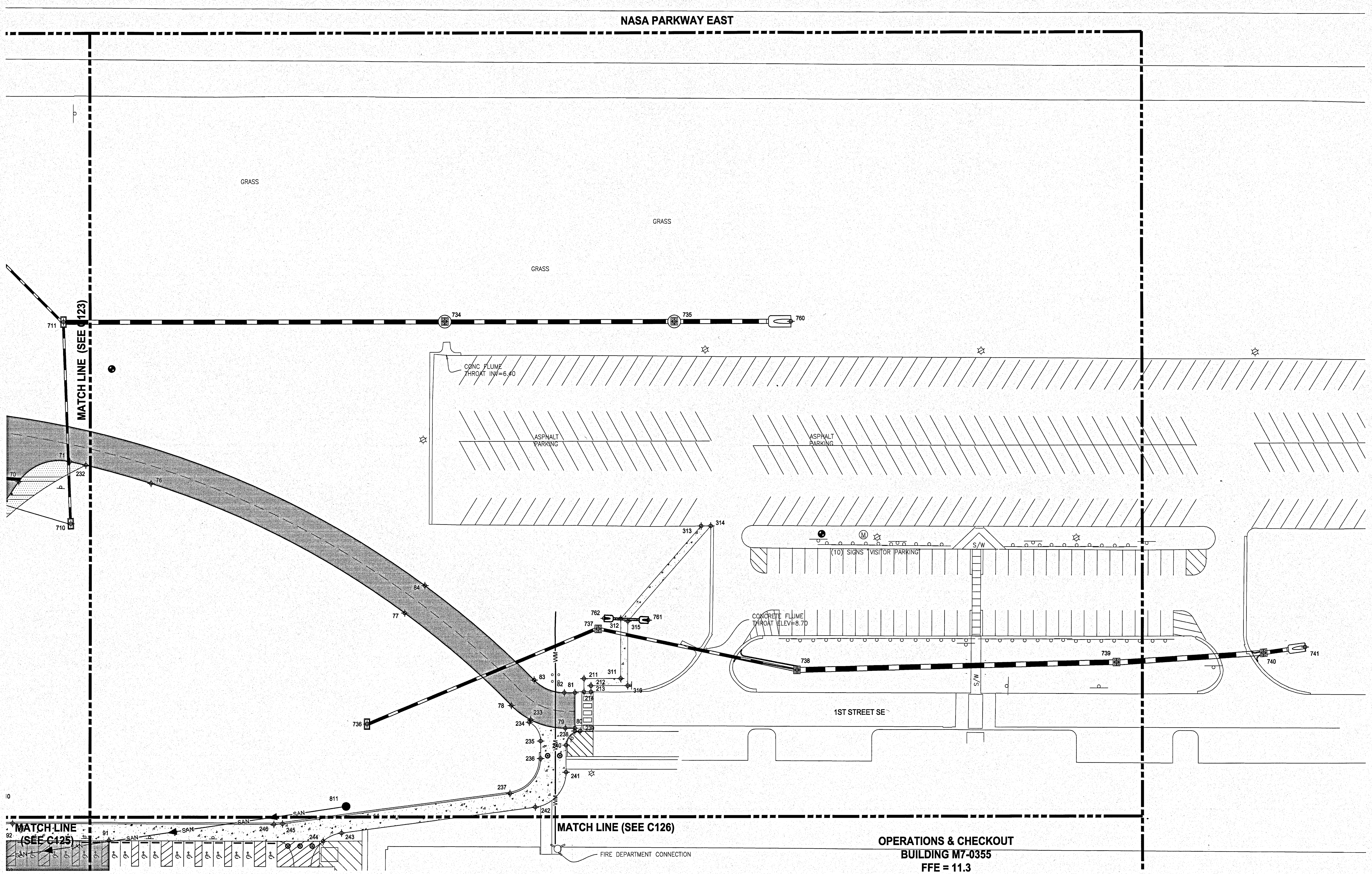

SYM	ZONE		DATE	APPROVED

REVISIONS

JONES EDMUNDS
730 NE WALDO ROAD, GAINESVILLE, FLORIDA 32641 / (352) 377-5821
3910 S WASHINGTON AVE, SUITE 210, TITUSVILLE, FLORIDA 32780 / (321) 269-2950

SIGNATURES	DATE
DRAWN P. UPSTILL	12.18.13
CHECKED M. O'BRIEN	12.18.13
SUBMITTED: ARCH/ENG OF RECORD W. NICKEL	12/18/13
ST of LICENSURE: FL LICENSE NO: 68638	
APPROVED R. KOLLER	12/18/13
K. MILLER	12/19/13

NATIONAL AERONAUTICS AND SPACE ADMINISTRATION
JOHN F. KENNEDY SPACE CENTER, NASA
KENNEDY SPACE CENTER, FLORIDA

KSC CENTRAL CAMPUS
REPLACEMENT HEADQUARTERS BUILDING
PHASE 1
VOL. 1 OF 4

COORDINATE PLAN

C124

FILE NO.	SIZE	DWG. NO.
C-12070.00	F	79K39622 VOL 1

PCN. NO. 98745.1a SHEET 44

KSC FORM 1-11 (3/76)(C/G 3/94)

NOTICE: When Government drawings, specifications, or other data are used for any purpose other than in connection with a definitely related Government procurement operation, the United States Government thereby incurs no responsibility nor obligation whatsoever; and the fact that the Government may have formulated, furnished, or in any way supplied the said drawings, specifications or other data is not to be regarded by implication or otherwise as in any manner licensing the holder or any other person or corporation, or conveying any rights or permission to manufacture, use, or sell any patented invention that may in any way be related thereto.

NOTE
SEE C120 AND C121 FOR COORDINATE TABLES.

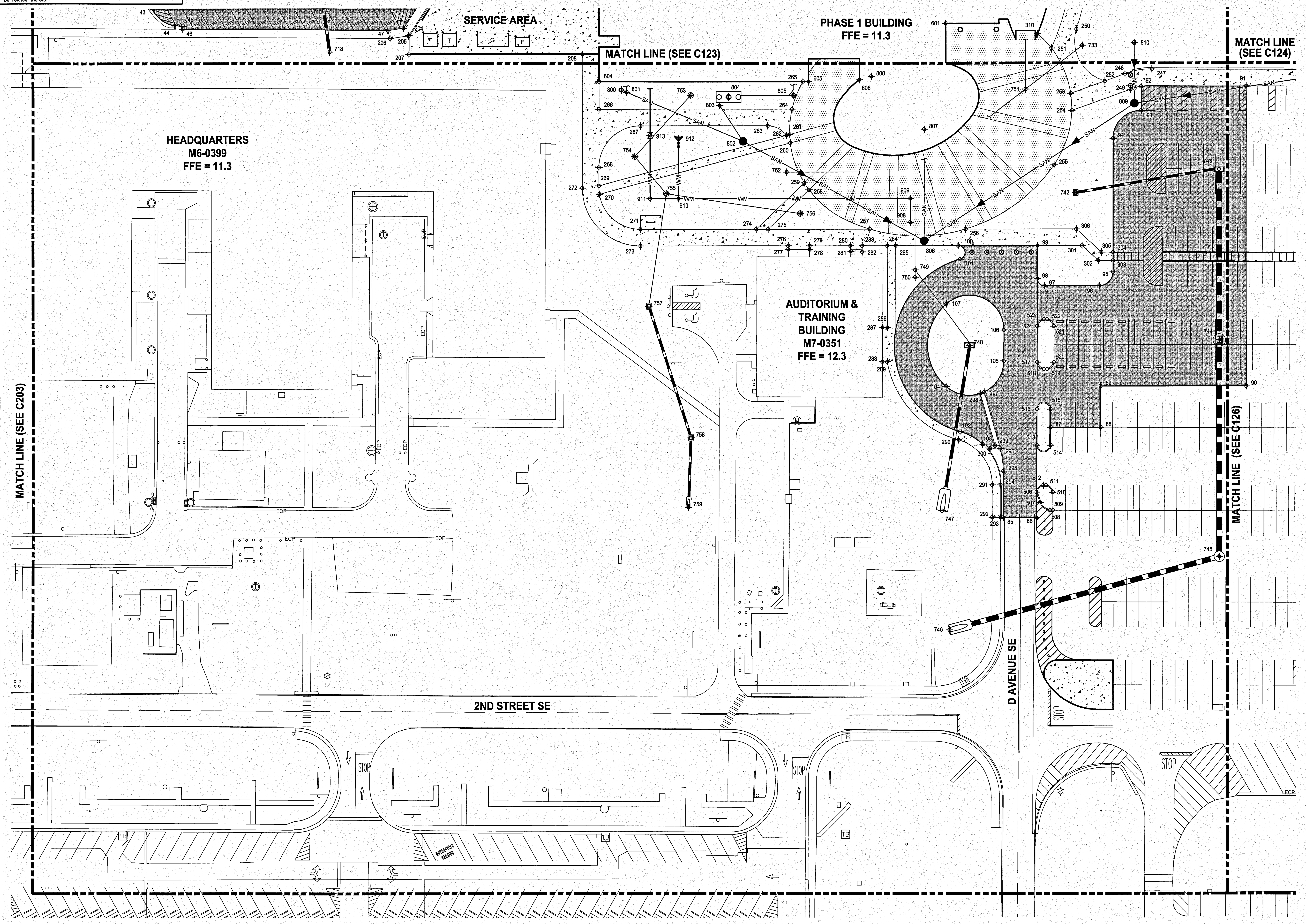

GRAPHIC SCALE
0 15 30 60 90
SCALE IN FEET
1" = 30'

SYM	ZONE	REVISIONS	DATE	APPROVED

JONES EDMUNDS
730 NE WALDO ROAD, GAINESVILLE, FLORIDA 32641 / (352) 377-5821
3910 S WASHINGTON AVE, SUITE 210, TITUSVILLE, FLORIDA 32780 / (321) 269-2950

SIGNATURES	DATE
DRAWN P. UPSTILL	12.18.13
CHECKED M. O'BRIEN	12.18.13
SUBMITTED: ARCH/ENG OF RECORD W. NICKEL	12/18/13
ST of LICENSURE: FL LICENSE NO: 68638	
APPROVED R. KOLLER	12/18/13
K. MILLER	12/19/13

NATIONAL AERONAUTICS AND SPACE ADMINISTRATION
JOHN F. KENNEDY SPACE CENTER, NASA
KENNEDY SPACE CENTER, FLORIDA

KSC CENTRAL CAMPUS
REPLACEMENT HEADQUARTERS BUILDING
PHASE 1
VOL. 1 OF 4

COORDINATE PLAN

FILE NO. C-12070.00 | SIZE F | DWG. NO. 79K39622 VOL 1
PCN. NO. 98745.1a | SHEET 45

C125

KSC FORM 1-11 (3/76)(C/G 3/94)

NOTICE: When Government drawings, specifications, or other data are used for any purpose other than in connection with a definitely related Government procurement operation, the United States Government thereby incurs no responsibility nor obligation whatsoever; and the fact that the Government may have formulated, furnished, or in any way supplied the said drawings, specifications or other data is not to be regarded by implication or otherwise as in any manner licensing the holder or any other person or corporation, or conveying any rights or permission to manufacture, use, or sell any patented invention that may in any way be related thereto.

NOTE
SEE C120 AND C121 FOR COORDINATE TABLES.

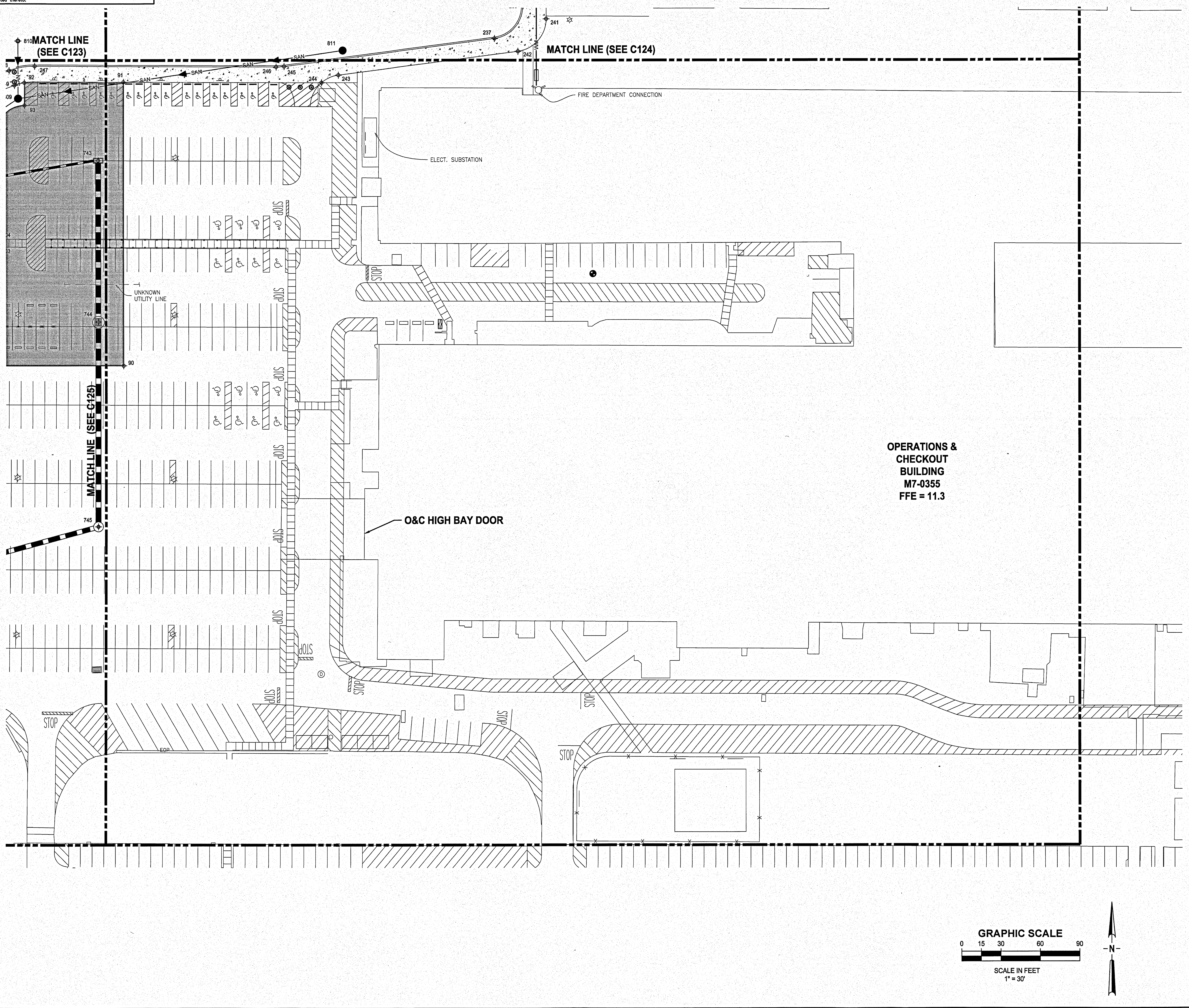

SYM	ZONE	REVISIONS	DATE	APPROVED

JONES EDMUNDS
730 NE WALDO ROAD, GAINESVILLE, FLORIDA 32641 / (352) 377-5821
3910 S WASHINGTON AVE, SUITE 210, TITUSVILLE, FLORIDA 32780 / (321) 269-2950

SIGNATURES	DATE
DRAWN P. UPSTILL	12.18.13
CHECKED M. O'BRIEN	12.18.13
SUBMITTED: ARCH/ENG OF RECORD W. NICKEL	12/18/13
ST of LICENSURE: FL LICENSE NO: 68638	
APPROVED R. KOLLER	12/18/13
K. MILLER	12/19/13

NATIONAL AERONAUTICS AND SPACE ADMINISTRATION
JOHN F. KENNEDY SPACE CENTER, NASA
KENNEDY SPACE CENTER, FLORIDA

KSC CENTRAL CAMPUS
REPLACEMENT HEADQUARTERS BUILDING
PHASE 1
VOL. 1 OF 4

COORDINATE PLAN

FILE NO.	SIZE	DWG. NO.
C-12070.00	F	79K39622 VOL 1

PCN. NO. 98745.1a SHEET 46

C126

KSC FORM 1-11 (3/76)(C/G 3/94)

NOTICE: When Government drawings, specifications, or other data are used for any purpose other than in connection with a definitely related Government procurement operation, the United States Government thereby incurs no responsibility nor obligation whatsoever; and the fact that the Government may have formulated, furnished, or in any way supplied the said drawings, specifications or other data is not to be regarded by implication or otherwise as in any manner licensing the holder or any other person or corporation, or conveying any rights or permission to manufacture, use, or sell any patented invention that may in any way be related thereto.

NOTE
SEE C122 FOR COORDINATE TABLES.

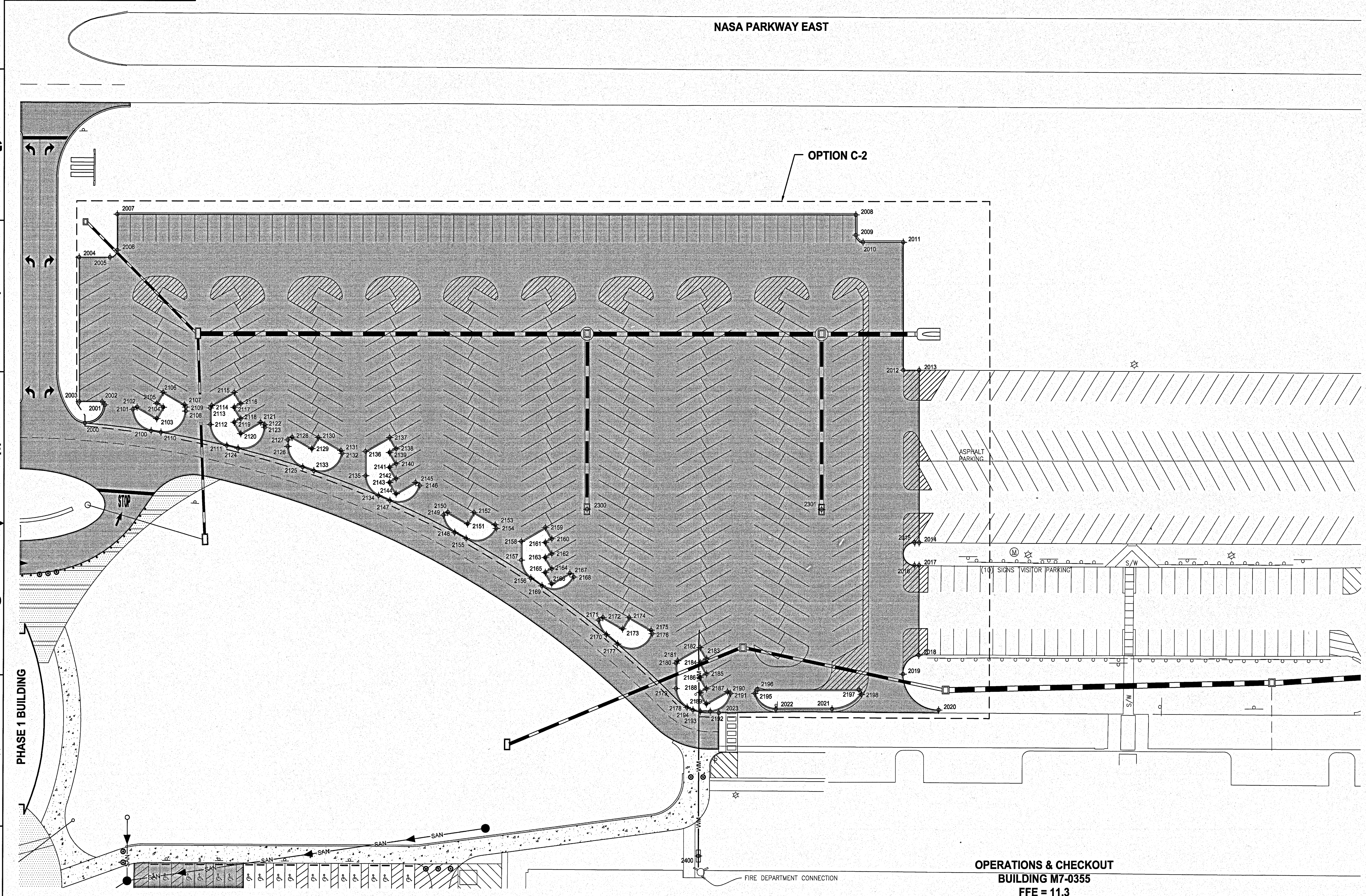

SYM	ZONE	REVISIONS	DATE	APPROVED

JONES EDMUNDS
730 NE WALDO ROAD, GAINESVILLE, FLORIDA 32641 / (352) 377-5821
3910 S WASHINGTON AVE, SUITE 210, TITUSVILLE, FLORIDA 32780 / (321) 269-2950

SIGNATURES	DATE
DRAWN P. UPSTILL	12.18.13
CHECKED M. O'BRIEN	12.18.13
SUBMITTED: ARCH/ENG OF RECORD W. NICKEL	12/18/13
ST of LICENSURE: FL LICENSE NO. 68638	
APPROVED R. KOLLER	12/18/13
K. MILLER	12/19/13

NATIONAL AERONAUTICS AND SPACE ADMINISTRATION
JOHN F. KENNEDY SPACE CENTER, NASA
KENNEDY SPACE CENTER, FLORIDA

KSC CENTRAL CAMPUS
REPLACEMENT HEADQUARTERS BUILDING
PHASE 1
VOL. 1 OF 4

COORDINATE PLAN - OPTION C-2

FILE NO.	SIZE	DWG. NO.
C-12070.00	F	79K39622 VOL 1

PCN. NO. 98745.1a
SHEET 47

C127

KSC FORM 1-11 (3/76)(C/G 3/94)

NOTICE: When Government drawings, specifications, or other data are used for any purpose other than in connection with a definitely related Government procurement operation, the United States Government thereby incurs no responsibility nor obligation whatsoever; and the fact that the Government may have formulated, furnished, or in any way supplied the said drawings, specifications or other data is not to be regarded by implication or otherwise as in any manner licensing the holder or any other person or corporation, or conveying any rights or permission to manufacture, use, or sell any patented invention that may in any way be related thereto.

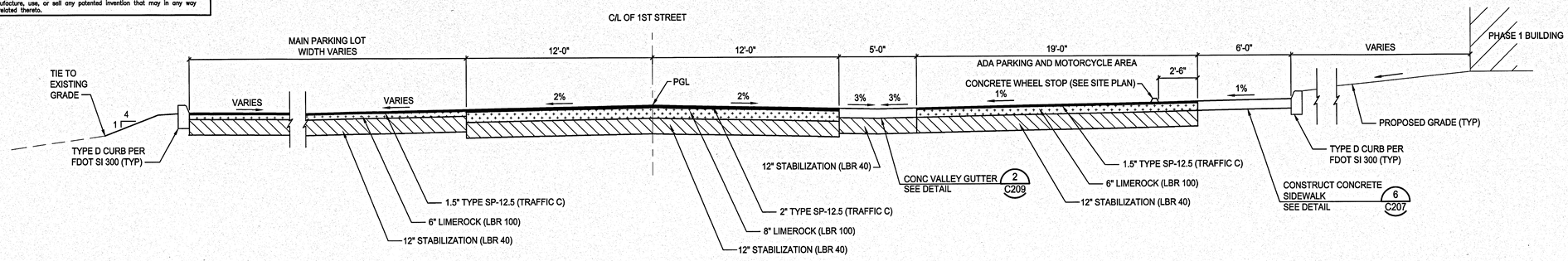

PARKING AND 1ST STREET TYPICAL SECTION 1
NTS C115

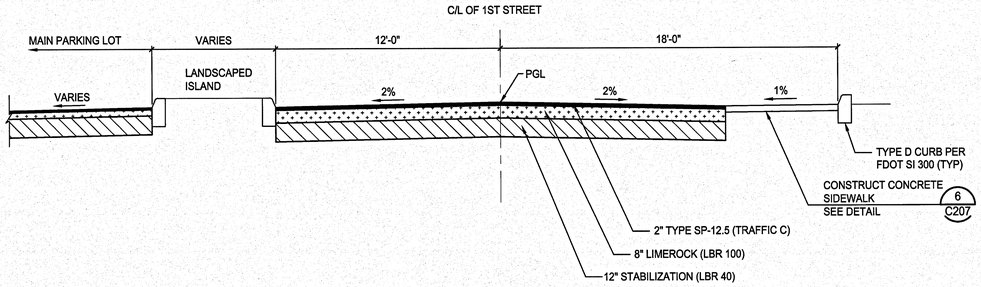

1ST STREET TYPICAL SECTION 2
NTS C115

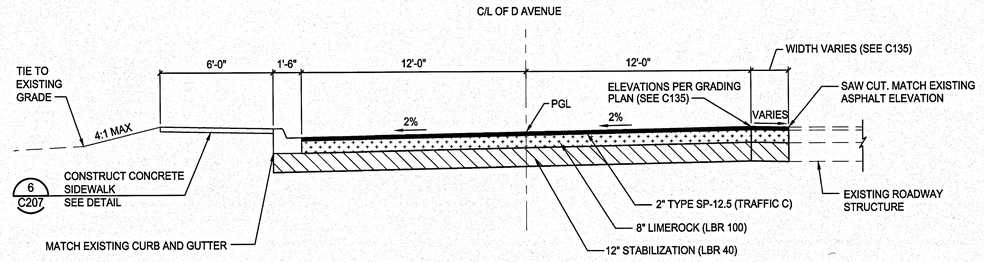

D AVENUE TYPICAL SECTION 3
NTS C117

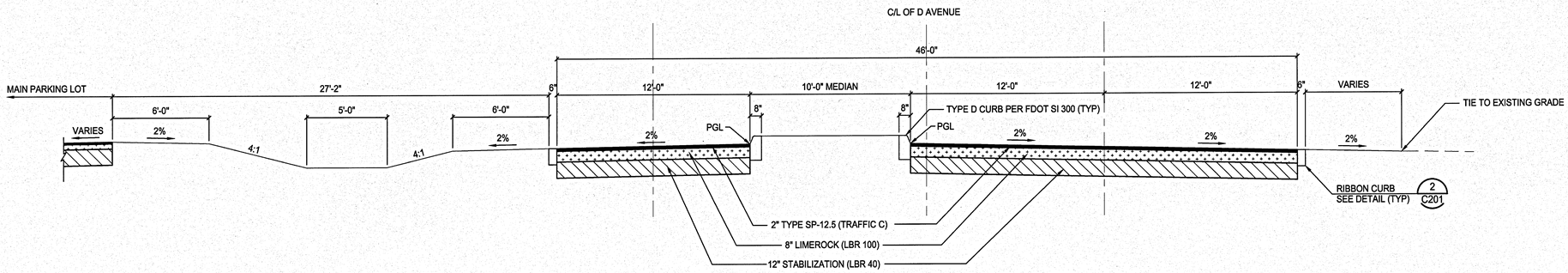

D AVENUE ENTRANCE TYPICAL SECTION 4
NTS C115

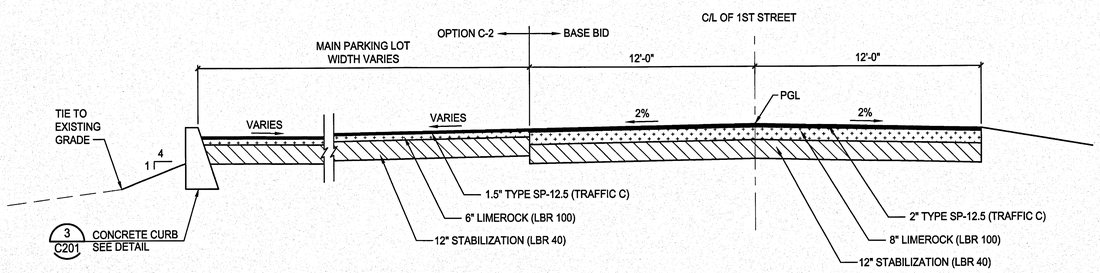

PARKING (OPTION C-2) AND 1ST STREET TYPICAL SECTION 5
NTS

SYM	ZONE		DATE	APPROVED

REVISIONS

JONES EDMUNDS
730 NE WALDO ROAD, GAINESVILLE, FLORIDA 32641 / (352) 377-5821
3910 S WASHINGTON AVE, SUITE 210, TITUSVILLE, FLORIDA 32780 / (321) 269-2950

SIGNATURES	DATE
DRAWN P. UPSTILL	12.18.13
CHECKED M. O'BRIEN	12.18.13
SUBMITTED: ARCHITECT OF RECORD W. NICKEL	12/18/13
ST of LICENSURE: FL LICENSE NO: 68638	
APPROVED PROJECT MANAGER K. MILLER	12/18/13 1/1/1/13

NATIONAL AERONAUTICS AND SPACE ADMINISTRATION
JOHN F. KENNEDY SPACE CENTER, NASA
KENNEDY SPACE CENTER, FLORIDA

KSC CENTRAL CAMPUS
REPLACEMENT HEADQUARTERS BUILDING
PHASE 1
VOL. 1 OF 4

ROADWAY AND PARKING TYPICAL SECTIONS

FILE NO.	SIZE	DWG. NO.
C-12070.00	F	79K39622 VOL 1

PCN. NO. 98745.1a SHEET 48

C128

KSC FORM 1-11 (3/76)(C/G 3/94)

FILE: \\ksnas\jointreg\VRKNJ Huntsville Engrg\Ltr-Hv Centrl Campus Proj\Lprt Contract Drawings\Civil\VRKNJXA01\c12070.dwg PRINTED: 12/19/2013 8:13 AM, BY USER: Pete Upstill LAST MODIFIED: 11/13/2013 9:17 AM, BY USER: pupstill

NOTICE: When Government drawings, specifications, or other data are used for any purpose other than in connection with a definitely related Government procurement operation, the United States Government thereby incurs no responsibility nor obligation whatsoever; and the fact that the Government may have formulated, furnished, or in any way supplied the said drawings, specifications or other data is not to be regarded by implication or otherwise as in any manner licensing the holder or any other person or corporation, or conveying any rights or permission to manufacture, use, or sell any patented invention that may in any way be related thereto.

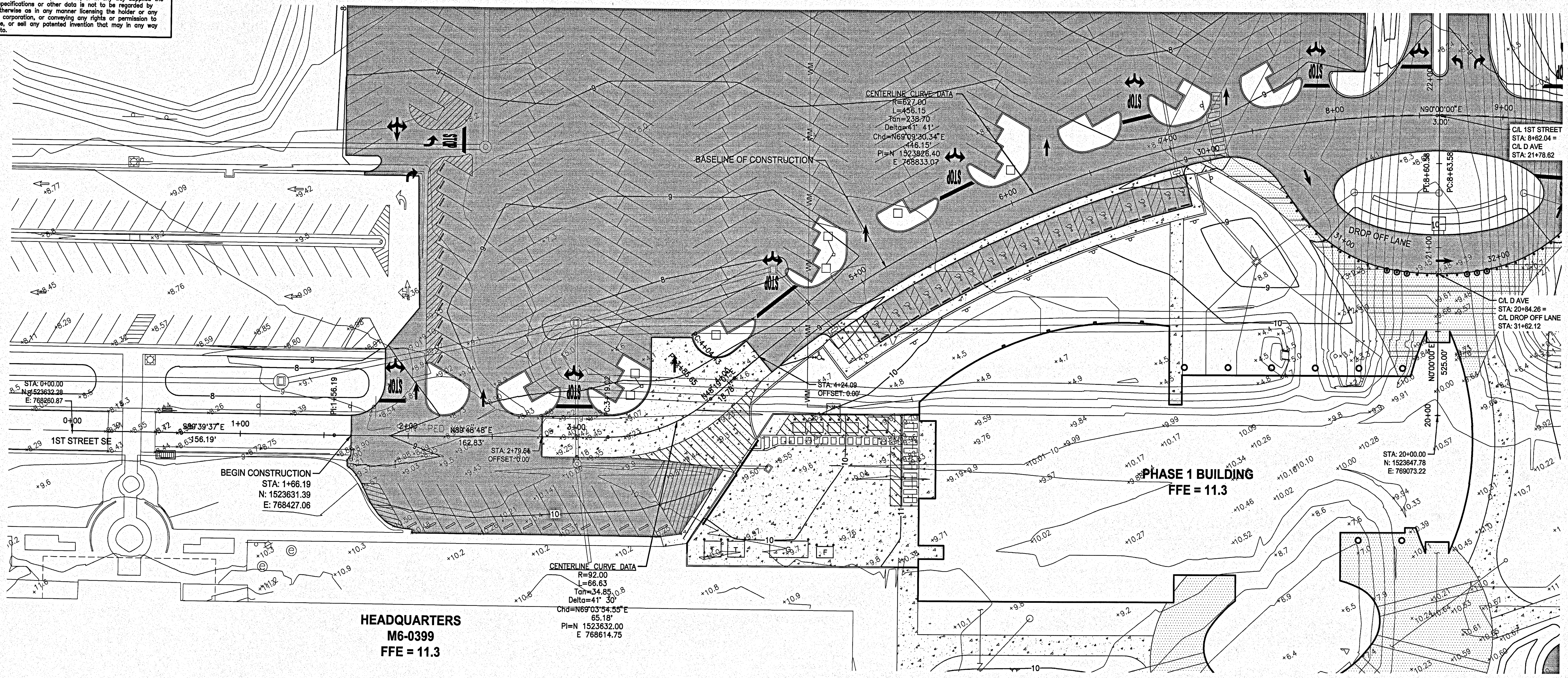

PLAN

1"=30'

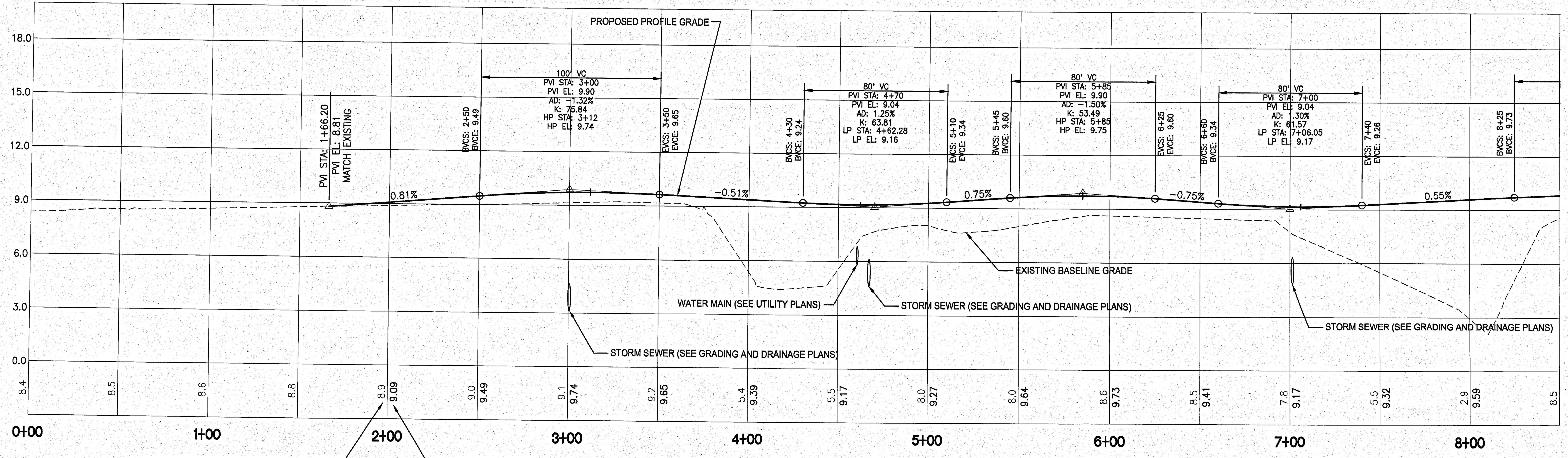

PROFILE

1"=30' H
1"=3' V

GRAPHIC SCALE 0 1.5 3 6 9 — SCALE IN FEET 1" = 3' V

GRAPHIC SCALE 0 15 30 60 90 — SCALE IN FEET 1" = 30' H

SYM	ZONE	REVISIONS	DATE	APPROVED

JONES EDMUNDS
730 NE WALDO ROAD, GAINESVILLE, FLORIDA 32641 / (352) 377-5821
3910 S WASHINGTON AVE, SUITE 210, TITUSVILLE, FLORIDA 32780 / (321) 269-2950

NATIONAL AERONAUTICS AND SPACE ADMINISTRATION
JOHN F. KENNEDY SPACE CENTER, NASA
KENNEDY SPACE CENTER, FLORIDA

KSC CENTRAL CAMPUS
REPLACEMENT HEADQUARTERS BUILDING
PHASE 1
VOL. 1 OF 4
1ST STREET SE PLAN AND PROFILE

SIGNATURES	DATE
DRAWN P. UPSTILL	12.18.13
CHECKED M. O'BRIEN	12.18.13
SUBMITTED, ARCHITECT OF RECORD W. NICKEL	12/18/13
ST of LICENSURE: FL LICENSE NO: 68638	
APPROVED R. KOLLER	12/18/13
K. MILLER	12/19/13

C129

FILE NO. C-12070.00 | SIZE F | DWG. NO. 79K39622 VOL 1

PCN. NO. 98745.1a | SHEET 49

KSC FORM 1-11 (3/78)(C/G 3/94)

NOTICE: When Government drawings, specifications, or other data are used for any purpose other than in connection with a definitely related Government procurement operation, the United States Government thereby incurs no responsibility nor obligation whatsoever; and the fact that the Government may have formulated, furnished, or in any way supplied the said drawings, specifications or other data is not to be regarded by implication or otherwise as in any manner licensing the holder or any other person or corporation, or conveying any rights or permission to manufacture, use, or sell any patented invention that may in any way be related thereto.

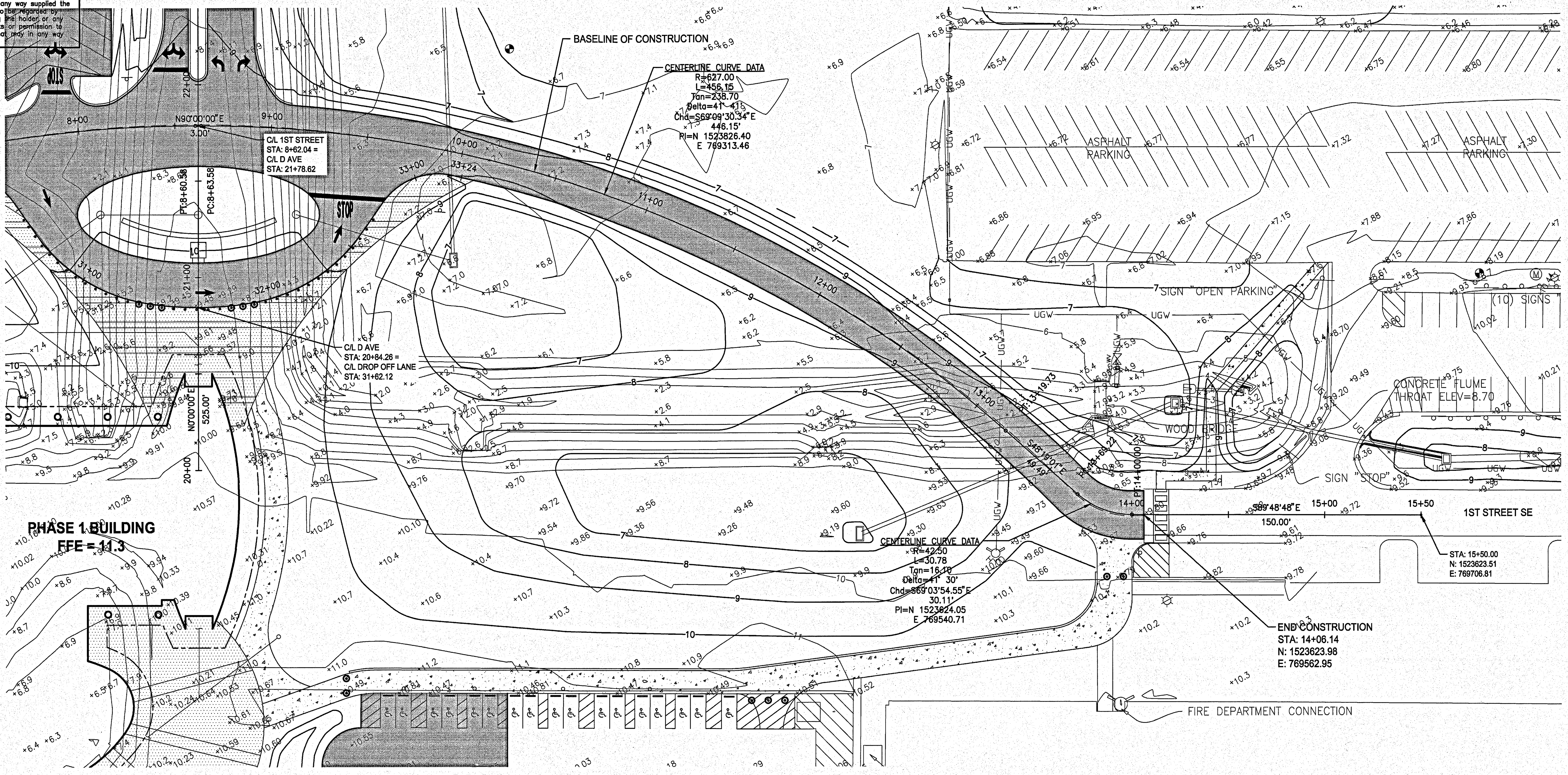

PLAN

1"=30'

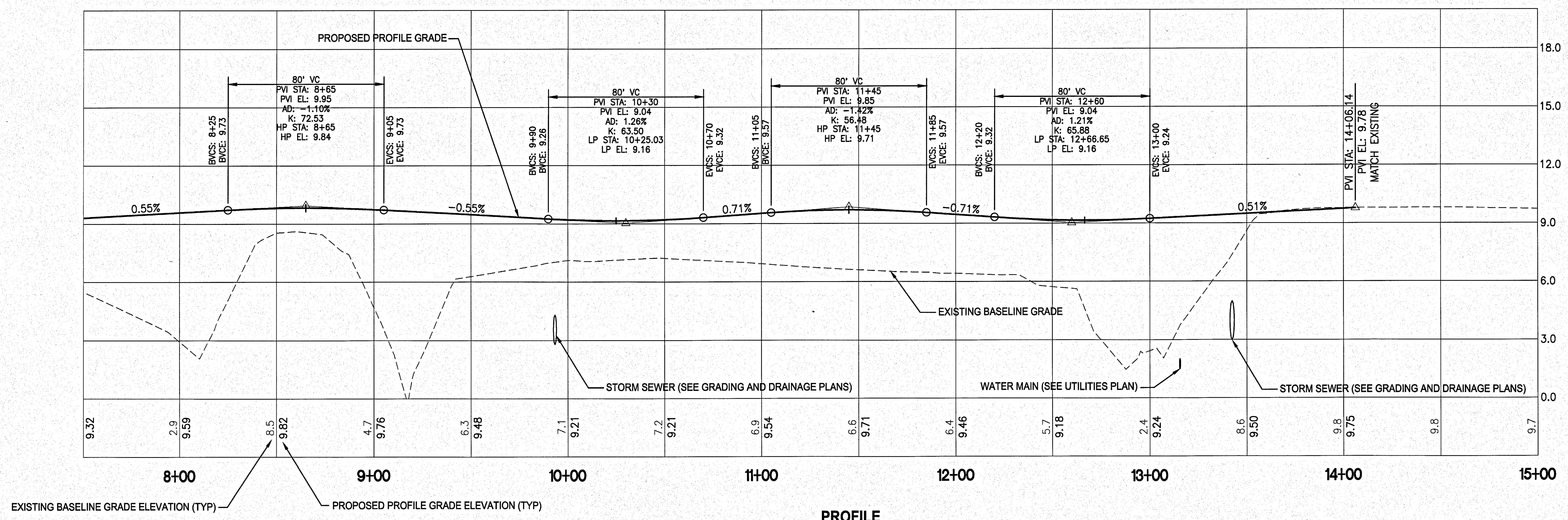

PROFILE

1"=30' H
1"=3' V

GRAPHIC SCALE 0 1.5 3 6 9 SCALE IN FEET 1" = 3' V

GRAPHIC SCALE 0 15 30 60 90 SCALE IN FEET 1" = 30' H

SYM	ZONE		DATE	APPROVED
REVISIONS				

JONES EDMUNDS
730 NE WALDO ROAD, GAINESVILLE, FLORIDA 32641 / (352) 377-5821
3910 S WASHINGTON AVE, SUITE 210, TITUSVILLE, FLORIDA 32780 / (321) 269-2950

SIGNATURES	DATE
DRAWN P. UPSTILL	12.18.13
CHECKED M. O'BRIEN	12.18.13
SUBMITTED: ARCHITECT OF RECORD W. NICKEL	12/18/13
ST of LICENSURE: FL LICENSE NO. 68638	
APPROVED R.	12/18/13
K. MILLER	12/19/13

NATIONAL AERONAUTICS AND SPACE ADMINISTRATION
JOHN F. KENNEDY SPACE CENTER, NASA
KENNEDY SPACE CENTER, FLORIDA

KSC CENTRAL CAMPUS
REPLACEMENT HEADQUARTERS BUILDING
PHASE 1
VOL. 1 OF 4
1ST STREET SE PLAN AND PROFILE

FILE NO. C-12070.00 | SIZE F | DWG. NO. 79K39622 VOL 1
PCN. NO. 98745.1a | SHEET 50

C130

NOTICE: When Government drawings, specifications, or other data are used for any purpose other than in connection with a definitely related Government procurement operation, the United States Government thereby incurs no responsibility nor obligation whatsoever; and the fact that the Government may have formulated, furnished, or in any way supplied the said drawings, specifications or other data is not to be regarded by implication or otherwise as in any manner licensing the holder or any other person or corporation, or conveying any rights or permission to manufacture, use, or sell any patented invention that may in any way be related thereto.

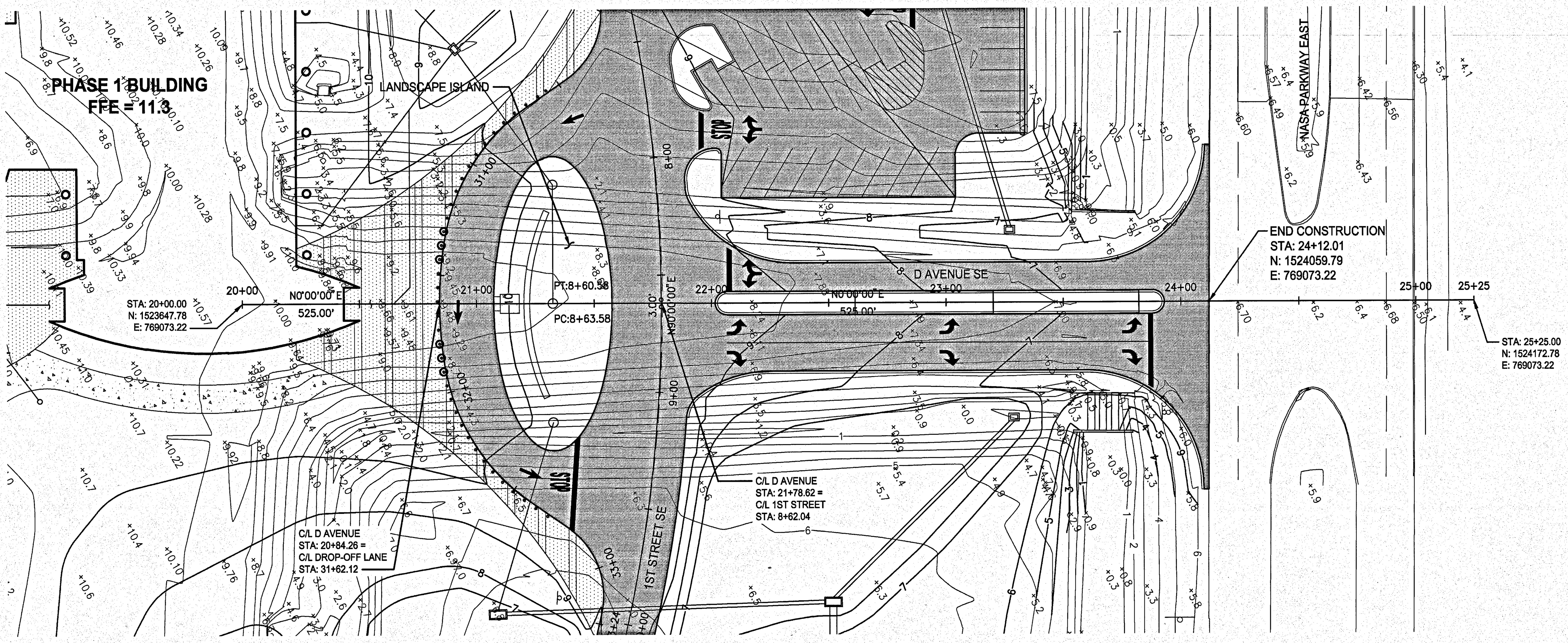

PLAN
1"=30'

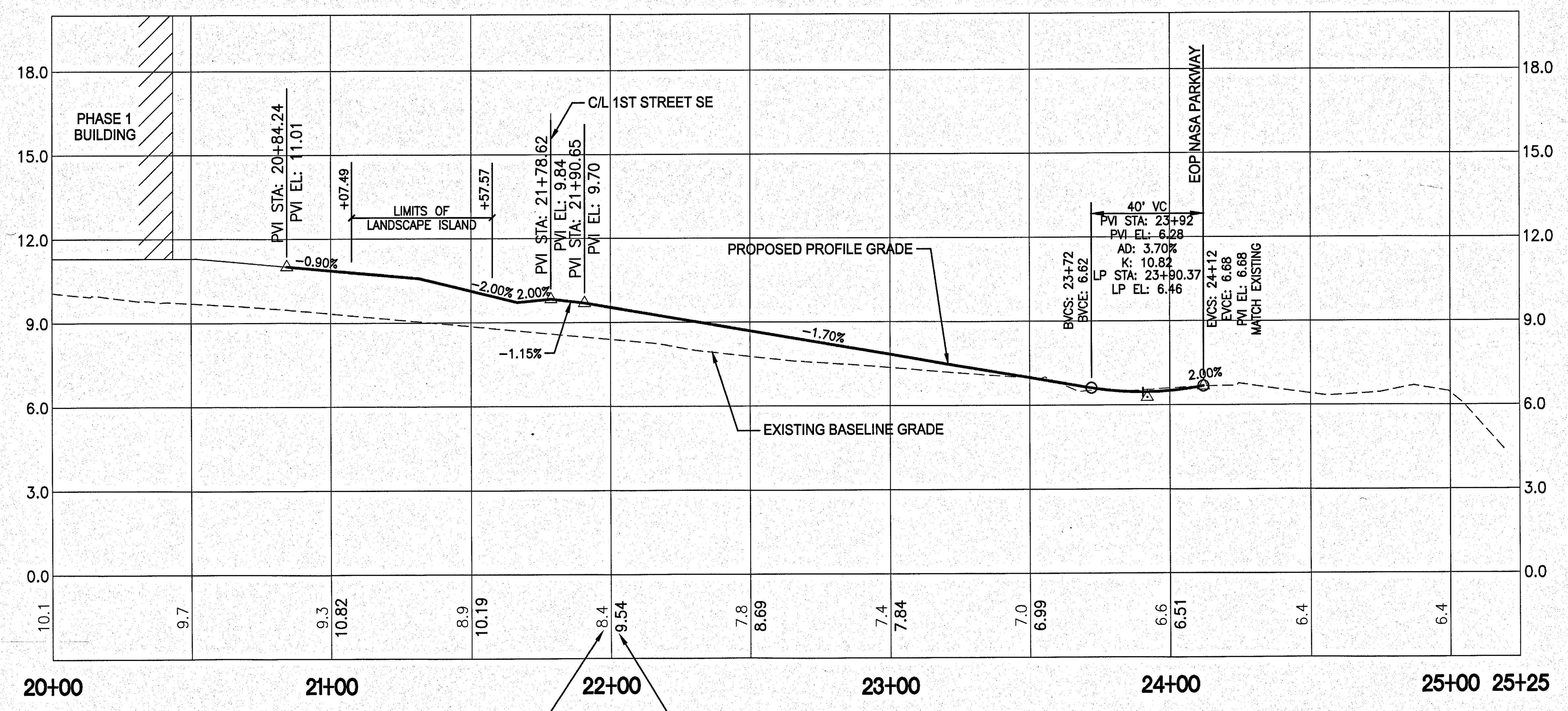

PROFILE
1"=30' H
1"=3' V

GRAPHIC SCALE
0 1.5 3 6 9
SCALE IN FEET
1" = 3' V

GRAPHIC SCALE
0 15 30 60 90
SCALE IN FEET
1" = 30' H

SYM	ZONE		DATE	APPROVED

REVISIONS

JONES EDMUNDS
730 NE WALDO ROAD, GAINESVILLE, FLORIDA 32641 / (352) 377-5821
3910 S WASHINGTON AVE, SUITE 210, TITUSVILLE, FLORIDA 32780 / (321) 269-2950

SIGNATURES	DATE
DRAWN P. UPSTILL	12.18.13
CHECKED M. O'BRIEN	12.18.13
SUBMITTED: ARCH/ENG OF RECORD W. NICKEL	12/18/13
ST of LICENSURE: FL LICENSE NO: 68638	
APPROVED R. KOLLER	12/18/13
K. MILLER	12/19/13

NATIONAL AERONAUTICS AND SPACE ADMINISTRATION
JOHN F. KENNEDY SPACE CENTER, NASA
KENNEDY SPACE CENTER, FLORIDA

KSC CENTRAL CAMPUS
REPLACEMENT HEADQUARTERS BUILDING
PHASE 1
VOL. 1 OF 4

D AVENUE SE PLAN AND PROFILE

FILE NO.	SIZE	DWG. NO.
C-12070.00	F	79K39622 VOL 1

PCN. NO. 98745.1a   SHEET 51

C131

KSC FORM 1-11 (3/76)(C/G 3/94)

NOTICE: When Government drawings, specifications, or other data are used for any purpose other than in connection with a definitely related Government procurement operation, the United States Government thereby incurs no responsibility nor obligation whatsoever; and the fact that the Government may have formulated, furnished, or in any way supplied the said drawings, specifications or other data is not to be regarded by implication or otherwise as in any manner licensing the holder or any other person or corporation, or conveying any rights or permission to manufacture, use, or sell any patented invention that may in any way be related thereto.

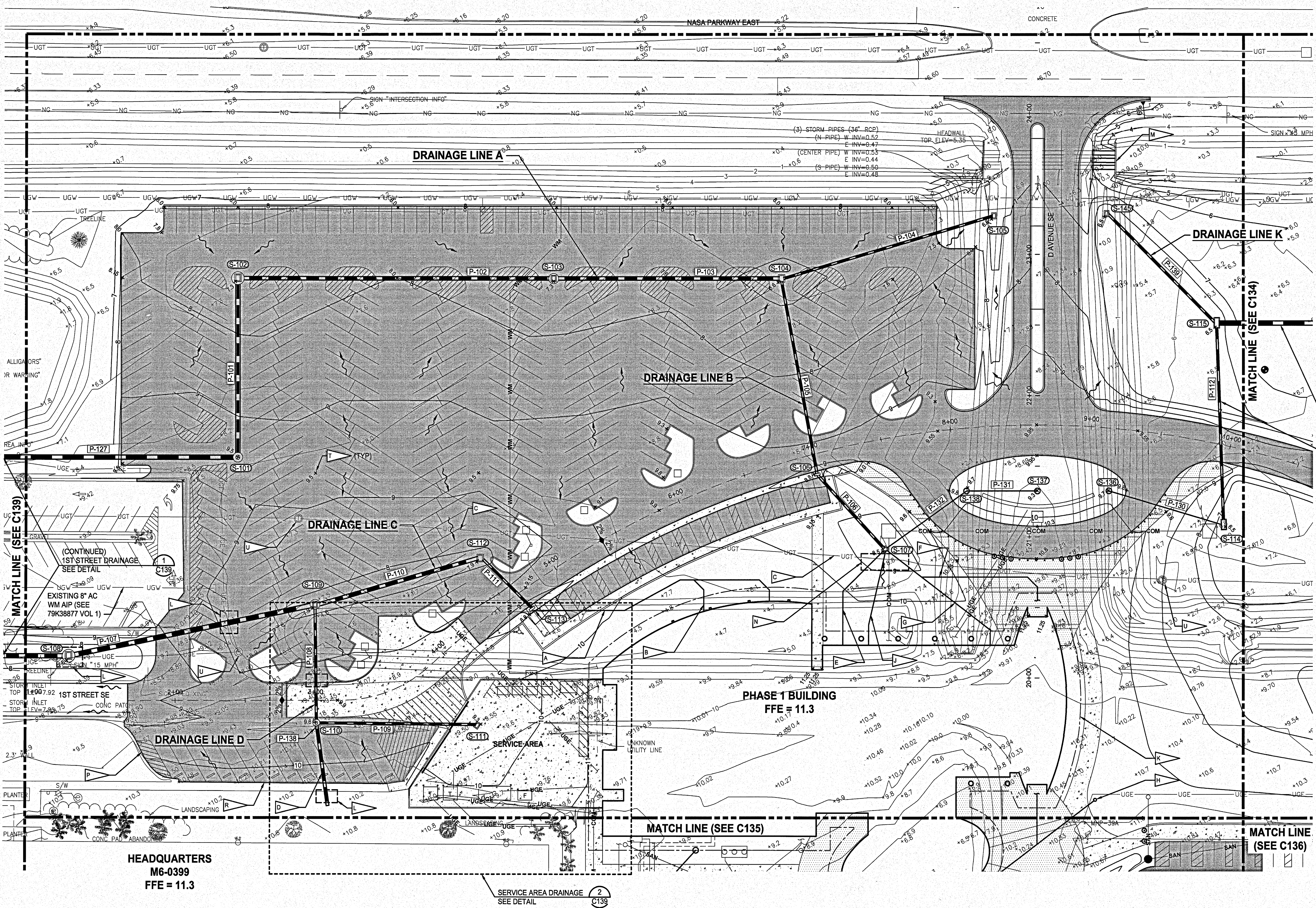

NOTES

- A: 185 LF 12" SDR 26 PVC ROOF DRAIN PIPE AT 0.3% SLOPE TO CONNECT TO BUILDING DOWNSPOUT AT INVERT 5.3.
- B: 54 LF 12" SDR 26 PVC ROOF DRAIN PIPE AT 0.3% SLOPE TO CONNECT TO BUILDING DOWNSPOUT AT INVERT 5.3.
- C: 4x2 COMMUNICATIONS DUCTBANK SHALL NOT BE DISTURBED
- D: 60' STUB OF 24" RCP PIPE WITH WATER-TIGHT PLUG FOR FUTURE EXTENSION. PLUG IN ACCORDANCE WITH FDOT SPECIFICATION No 430-4.5
- E: 79 LF 12" SDR 26 PVC ROOF DRAIN PIPE AT 0.3% SLOPE TO CONNECT TO BUILDING DOWNSPOUT AT INVERT 5.3.
- F: 100 LF 12" SDR 26 PVC ROOF DRAIN PIPE AT 0.3% SLOPE TO CONNECT TO BUILDING DOWNSPOUT AT INVERT 5.3.
- G: 104 LF 12" SDR 26 PVC ROOF DRAIN PIPE AT 0.3% SLOPE TO CONNECT TO BUILDING DOWNSPOUT AT INVERT 5.3.
- H: 6" ROOF DRAIN CLEAN OUT. SEE DETAIL 2/C208
- J: 72 LF 4" SDR 26 PVC CONDENSATE LINE
- K: 10 FOOT BUILDING EXCAVATION ENVELOPE. WITHIN THE AREA INDICATED, EXCAVATE ALL SOILS AND ANY OTHER MATERIALS FROM THE EXISTING GRADE LEVEL DOWN TO A DEPTH OF AT LEAST NINE (9) FEET BELOW THE EXISTING GRADE LEVEL. BACKFILL THE EXCAVATION AND COMPACT THE SUBGRADE AND BACKFILL SOILS IN ACCORDANCE WITH SPECIFICATIONS.
- L: UTILITY CONFLICT. SEE DETAIL 1/C211
- M: EXTEND (3) RCP PIPES 16' AND CONSTRUCT HEADWALL. SEE DETAIL 1/C206
- N: UTILITY CROSSINGS. SEE SECTIONS 2/C132 3/C132
- P: MATCH EXISTING GRADE AT CURB/GUTTER
- R: MATCH EXISTING GRADE AT SIDEWALK
- S. ADDITIONAL PROPOSED SPOT ELEVATIONS PROVIDED ON C133 TO AUGMENT PROPOSED CONTOURS AND HIGH/LOW SPOT ELEVATIONS
- T: HIGH/LOW PROPOSED SPOT ELEVATION
- U: ADJUST EXISTING MANHOLE TOP ELEVATION TO MATCH PROPOSED ELEVATIONS

DRAINAGE LINE E

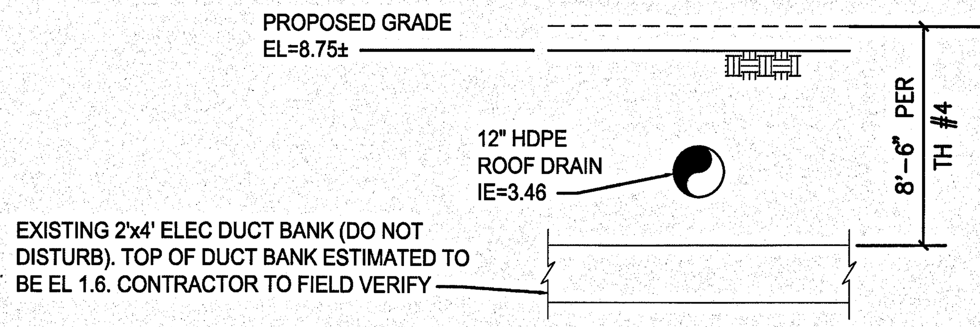

UTILITY CROSSING SECTION 2/C132

NTS

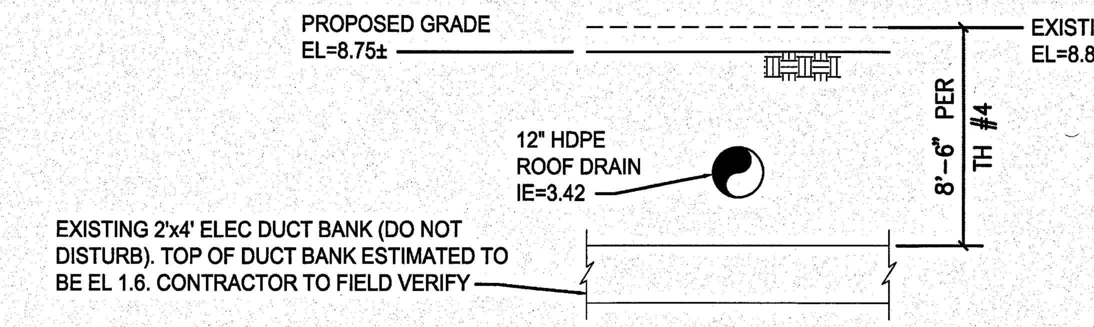

UTILITY CROSSING SECTION 3/C132

NTS

GRAPHIC SCALE

0 15 30 60 90

SCALE IN FEET
1" = 30'

SYM	ZONE		DATE	APPROVED

REVISIONS

JONES EDMUNDS
730 NE WALDO ROAD, GAINESVILLE, FLORIDA 32641 / (352) 377-5821
3910 S WASHINGTON AVE, SUITE 210, TITUSVILLE, FLORIDA 32780 / (321) 269-2950

SIGNATURES	DATE
DRAWN P. UPSTILL	12.18.13
CHECKED M. O'BRIEN	12.18.13
SUBMITTED: ARCH/ENG OF RECORD W. NICKEL	12/18/13
ST of LICENSURE: FL LICENSE NO: 68638	
APPROVED R. KOLLER	12/18/13
K. MILLER	12/19/13

NATIONAL AERONAUTICS AND SPACE ADMINISTRATION
JOHN F. KENNEDY SPACE CENTER, NASA
KENNEDY SPACE CENTER, FLORIDA

KSC CENTRAL CAMPUS
REPLACEMENT HEADQUARTERS BUILDING
PHASE 1
VOL. 1 OF 4

GRADING AND DRAINAGE PLAN

C132

FILE NO.	SIZE	DWG. NO.
C-12070.00	F	79K39622 VOL 1

PCN. NO. 98745.1a

SHEET 52

KSC FORM 1-11 (3/76)(C/G 3/94)

NOTICE: When Government drawings, specifications, or other data are used for any purpose other than in connection with a definitely related Government procurement operation, the United States Government thereby incurs no responsibility nor obligation whatsoever; and the fact that the Government may have formulated, furnished, or in any way supplied the said drawings, specifications or other data is not to be regarded by implication or otherwise as in any manner licensing the holder or any other person or corporation, or conveying any rights or permission to manufacture, use, or sell any patented invention that may in any way be related thereto.

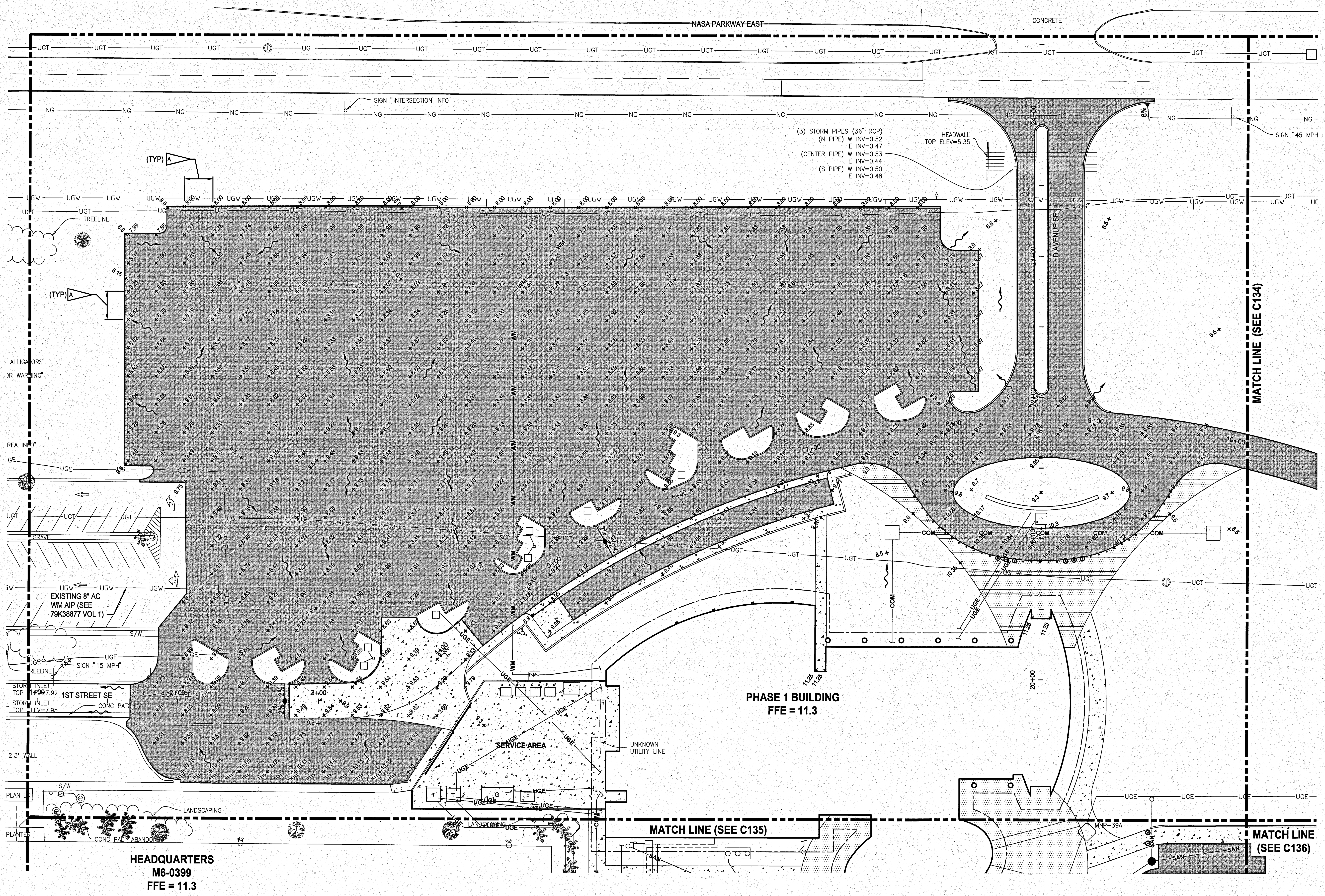

NOTES

A. PROPOSED SPOT ELEVATIONS ON A 20'x20' GRID.

B. PROPOSED SPOT ELEVATIONS PROVIDE TO AUGMENT THE PROPOSED CONTOURS AND HIGH/LOW SPOT ELEVATIONS INDICATED ON C132. REFER TO PLAN AND PROFILE VIEWS OF D AVENUE SE FOR PROFILE GRADES AND ELEVATIONS.

GRAPHIC SCALE

0 15 30 60 90

SCALE IN FEET
1" = 30'

SYM	ZONE	REVISIONS	DATE	APPROVED

JONES EDMUNDS
730 NE WALDO ROAD, GAINESVILLE, FLORIDA 32641 / (352) 377-5821
3910 S WASHINGTON AVE, SUITE 210, TITUSVILLE, FLORIDA 32780 / (321) 269-2950

SIGNATURES	DATE
DRAWN P. UPSTILL	12.18.13
CHECKED M. O'BRIEN	12.18.13
SUBMITTED: ARCH/ENG OF RECORD W. NICKEL	12/18/13
ST of LICENSURE: FL LICENSE NO: 68638	
APPROVED R. KOLLER	12/18/13
K. MILLER	12/19/13

NATIONAL AERONAUTICS AND SPACE ADMINISTRATION
JOHN F. KENNEDY SPACE CENTER, NASA
KENNEDY SPACE CENTER, FLORIDA

KSC CENTRAL CAMPUS
REPLACEMENT HEADQUARTERS BUILDING
PHASE 1
VOL. 1 OF 4

SUPPLEMENTAL GRADING PLAN

FILE NO.	SIZE	DWG. NO.
C-12070.00	F	79K39622 VOL 1

PCN. NO. 98745.1a — SHEET 53

C133

KSC FORM 1-11 (3/76)(C/G 3/94)

NOTICE: When Government drawings, specifications, or other data are used for any purpose other than in connection with a definitely related Government procurement operation, the United States Government thereby incurs no responsibility nor obligation whatsoever; and the fact that the Government may have formulated, furnished, or in any way supplied the said drawings, specifications or other data is not to be regarded by implication or otherwise as in any manner licensing the holder or any other person or corporation, or conveying any rights or permission to manufacture, use, or sell any patented invention that may in any way be related thereto.

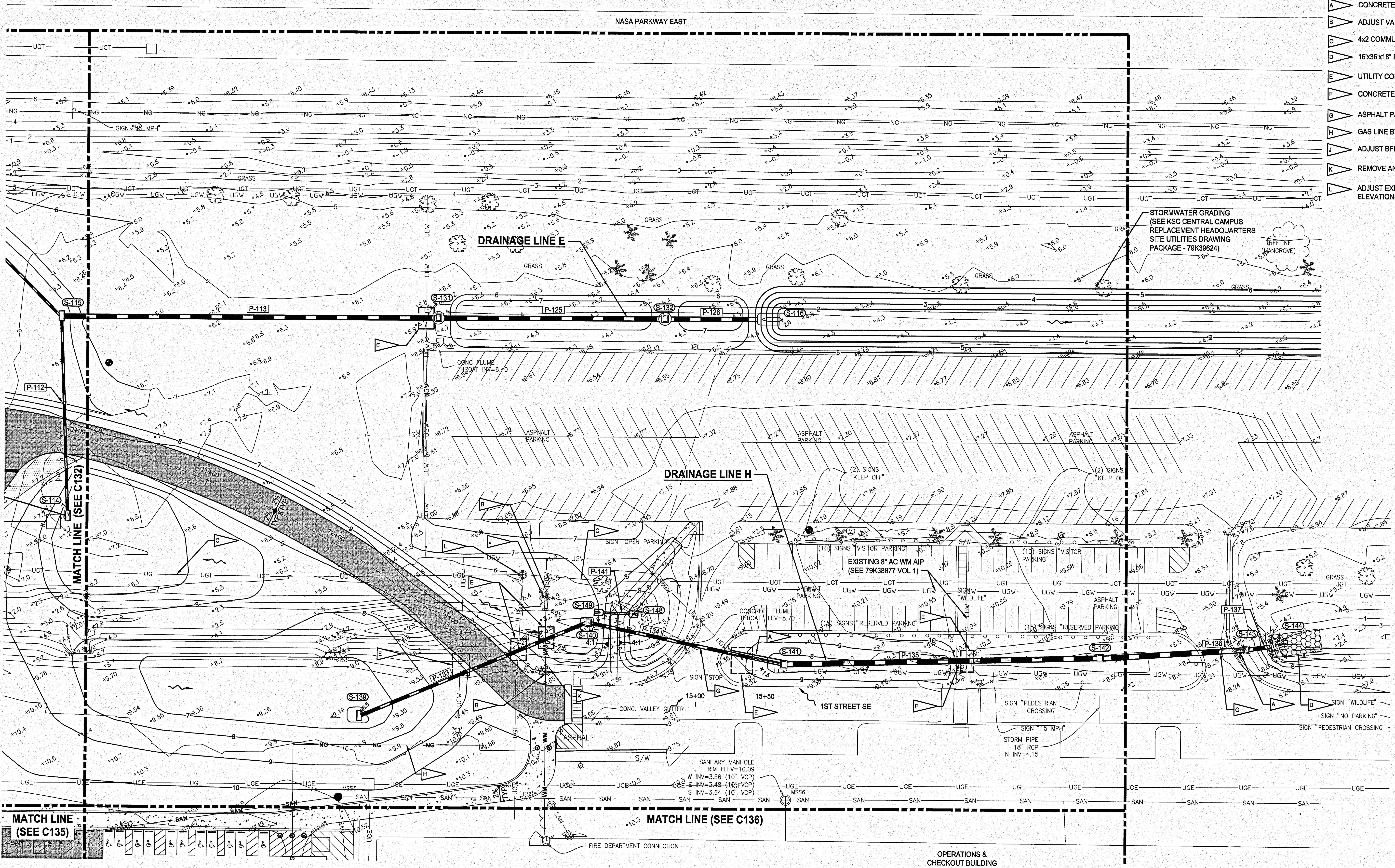

NOTES

- A — CONCRETE FLUME. SEE DETAIL 1/C202
- B — ADJUST VALVE BOX TO GRADE
- C — 4x2 COMMUNICATIONS DUCT BANK SHALL NOT BE DISTURBED
- D — 16'x36'x18" DEEP FDOT 530 RIPRAP (RUBBLE) WITH GEOTEXTILE
- E — UTILITY CONFLICT. SEE DETAIL 1/C211
- F — CONCRETE SIDEWALK RESTORATION 5/C207
- G — ASPHALT PAVEMENT RESTORATION. SEE DETAIL 2/C207
- H — GAS LINE BY OTHERS
- J — ADJUST BFP ASSEMBLY TO GRADE (SEE UTILITY DRAWINGS)
- K — REMOVE AND REINSTALL (4) BOLLARDS TO GRADE
- L — ADJUST EXISTING MANHOLE TOP ELEVATION TO MATCH PROPOSED ELEVATIONS

GRAPHIC SCALE
0 15 30 60 90
SCALE IN FEET
1" = 30'

N

SYM	ZONE	REVISIONS	DATE	APPROVED

JONES EDMUNDS
730 NE WALDO ROAD, GAINESVILLE, FLORIDA 32641 / (352) 377-5821
3910 S WASHINGTON AVE, SUITE 210, TITUSVILLE, FLORIDA 32780 / (321) 269-2950

SIGNATURES	DATE
DRAWN P. UPSTILL	12.18.13
CHECKED M. O'BRIEN	12.18.13
SUBMITTED: ARCH/ENG OF RECORD W. NICKEL	12/18/13
ST of LICENSURE: FL LICENSE NO: 68638	
APPROVED P. KOLLER	12/18/13
K. MILLER	12/19/13

NATIONAL AERONAUTICS AND SPACE ADMINISTRATION
JOHN F. KENNEDY SPACE CENTER, NASA
KENNEDY SPACE CENTER, FLORIDA

KSC CENTRAL CAMPUS
REPLACEMENT HEADQUARTERS BUILDING
PHASE 1
VOL. 1 OF 4

GRADING AND DRAINAGE PLAN

FILE NO. C-12070.00 | SIZE F | DWG. NO. 79K39622 VOL 1
PCN. NO. 98745.1a | SHEET 54

C134

KSC FORM 1-11 (3/78)(C/G 3/94)

NOTICE: When Government drawings, specifications, or other data are used for any purpose other than in connection with a definitely related Government procurement operation, the United States Government thereby incurs no responsibility nor obligation whatsoever; and the fact that the Government may have formulated, furnished, or in any way supplied the said drawings, specifications or other data is not to be regarded by implication or otherwise as in any manner licensing the holder or any other person or corporation, or conveying any rights or permission to manufacture, use, or sell any patented invention that may in any way be related thereto.

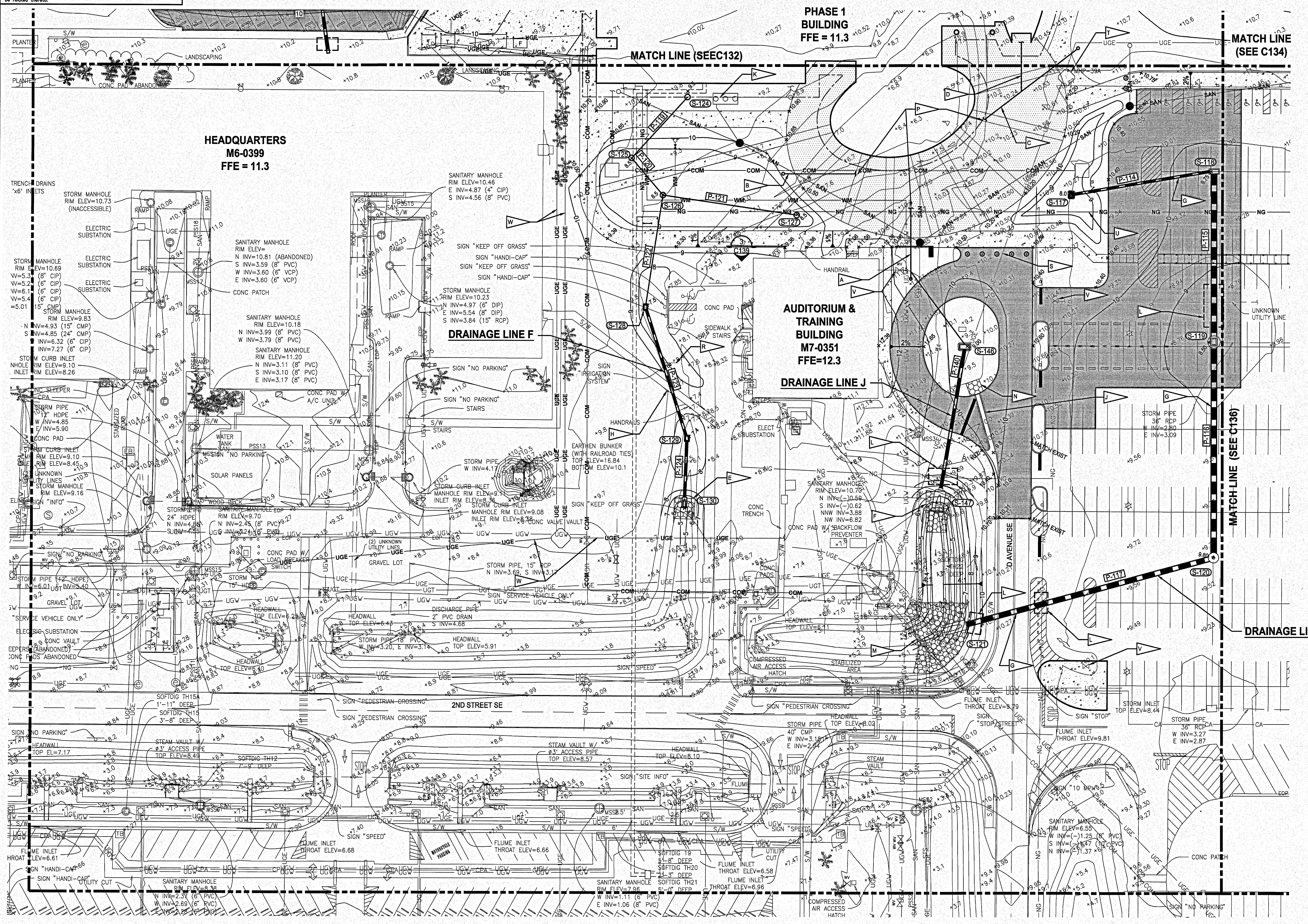

NOTES

- A — 110 LF 12" SDR 26 PVC ROOF DRAIN PIPE AT 0.3% SLOPE TO CONNECT TO BUILDING DOWNSPOUT AT INVERT 8.3 WITH 6" CLEAN OUT. SEE DETAIL 2/C208
- B — 50 LF 12" SDR 26 PVC ROOF DRAIN PIPE AT 0.3% SLOPE TO CONNECT TO BUILDING DOWNSPOUT AT INVERT 8.3 WITH 6" CLEAN OUT. SEE DETAIL 2/C208
- C — 85 LF 12" SDR 26 PVC ROOF DRAIN PIPE AT 0.3% SLOPE TO CONNECT TO BUILDING DOWNSPOUT AT INVERT 8.3 WITH 6" CLEAN OUT. SEE DETAIL 2/C208
- D — 42 LF 12" SDR 26 PVC ROOF DRAIN PIPE AT 0.3% SLOPE TO CONNECT TO BUILDING DOWNSPOUT AT INVERT 5.3.
- E — 16'x16'x18" DEEP FDOT 530 RIPRAP (RUBBLE) WITH GEOTEXTILE
- F — 16'x32'x18" DEEP FDOT 530 RIPRAP (RUBBLE) WITH GEOTEXTILE
- G — ASPHALT PAVEMENT RESTORATION. SEE DETAIL 2/C207
- H — CONCRETE SIDEWALK RESTORATION 5/C207
- J — 3' WIDE VALLEY GUTTER, SEE DETAIL 3/C209
- K — 10 FOOT BUILDING EXCAVATION ENVELOPE. WITHIN THE AREA INDICATED, EXCAVATE ALL SOILS AND ANY OTHER MATERIALS FROM THE EXISTING GRADE LEVEL DOWN TO A DEPTH OF AT LEAST NINE (9) FEET BELOW THE EXISTING GRADE LEVEL. BACKFILL THE EXCAVATION AND COMPACT THE SUBGRADE AND BACKFILL SOILS IN ACCORDANCE WITH SPECIFICATIONS.
- L — UTILITY CONFLICT. SEE DETAIL 1/C211
- M — 190 SY x 18" DEEP FDOT 530 RIPRAP (RUBBLE) WITH GEOTEXTILE
- N — 10'x10'x18" DEEP FDOT 530 RIPRAP (RUBBLE) WITH GEOTEXTILE
- P — ROOF DRAIN CONNECTIONS (SEE PLUMBING PLANS)
- R — REMOVE SIGN, RE-INSTALL AFTER STORM SEWER AND GRADING CONSTRUCTION IS COMPLETE
- S — DIRECTIONAL DRILL ELECTRICAL BY OTHERS
- T — ELECTRICAL MANHOLE BY OTHERS
- U — GAS LINE BY OTHERS
- V — ADJUST VALVE BOX TO GRADE
- W — ELECTRICAL SERVICE (SEE ELECTRICAL PLANS)

GRAPHIC SCALE
0 15 30 60 90
SCALE IN FEET
1" = 30'

SYM	ZONE	REVISIONS	DATE	APPROVED

JONES EDMUNDS
730 NE WALDO ROAD, GAINESVILLE, FLORIDA 32641 / (352) 377-5821
3910 S WASHINGTON AVE, SUITE 210, TITUSVILLE, FLORIDA 32780 / (321) 269-2950

SIGNATURES	DATE
DRAWN P. UPSTILL	12.18.13
CHECKED M. O'BRIEN	12.18.13
SUBMITTED, ARCHITECT OF RECORD W. NICKEL	12/18/13
ST of LICENSURE: FL LICENSE NO: 68638	
APPROVED	12/18/13
K. MILLER	12/19/13

NATIONAL AERONAUTICS AND SPACE ADMINISTRATION
JOHN F. KENNEDY SPACE CENTER, NASA
KENNEDY SPACE CENTER, FLORIDA

KSC CENTRAL CAMPUS
REPLACEMENT HEADQUARTERS BUILDING
PHASE 1
VOL. 1 OF 4

GRADING AND DRAINAGE PLAN

FILE NO.	SIZE	DWG. NO.
C-12070.00	F	79K39622 VOL 1

PCN. NO. 98745.1a — SHEET 55

C135

KSC FORM 1-11 (3/76)(C/G 3/94)

NOTICE: When Government drawings, specifications, or other data are used for any purpose other than in connection with a definitely related Government procurement operation, the United States Government thereby incurs no responsibility nor obligation whatsoever; and the fact that the Government may have formulated, furnished, or in any way supplied the said drawings, specifications or other data is not to be regarded by implication or otherwise as in any manner licensing the holder or any other person or corporation, or conveying any rights or permission to manufacture, use, or sell any patented invention that may in any way be related thereto.

NOTES

A — GAS LINE BY OTHERS

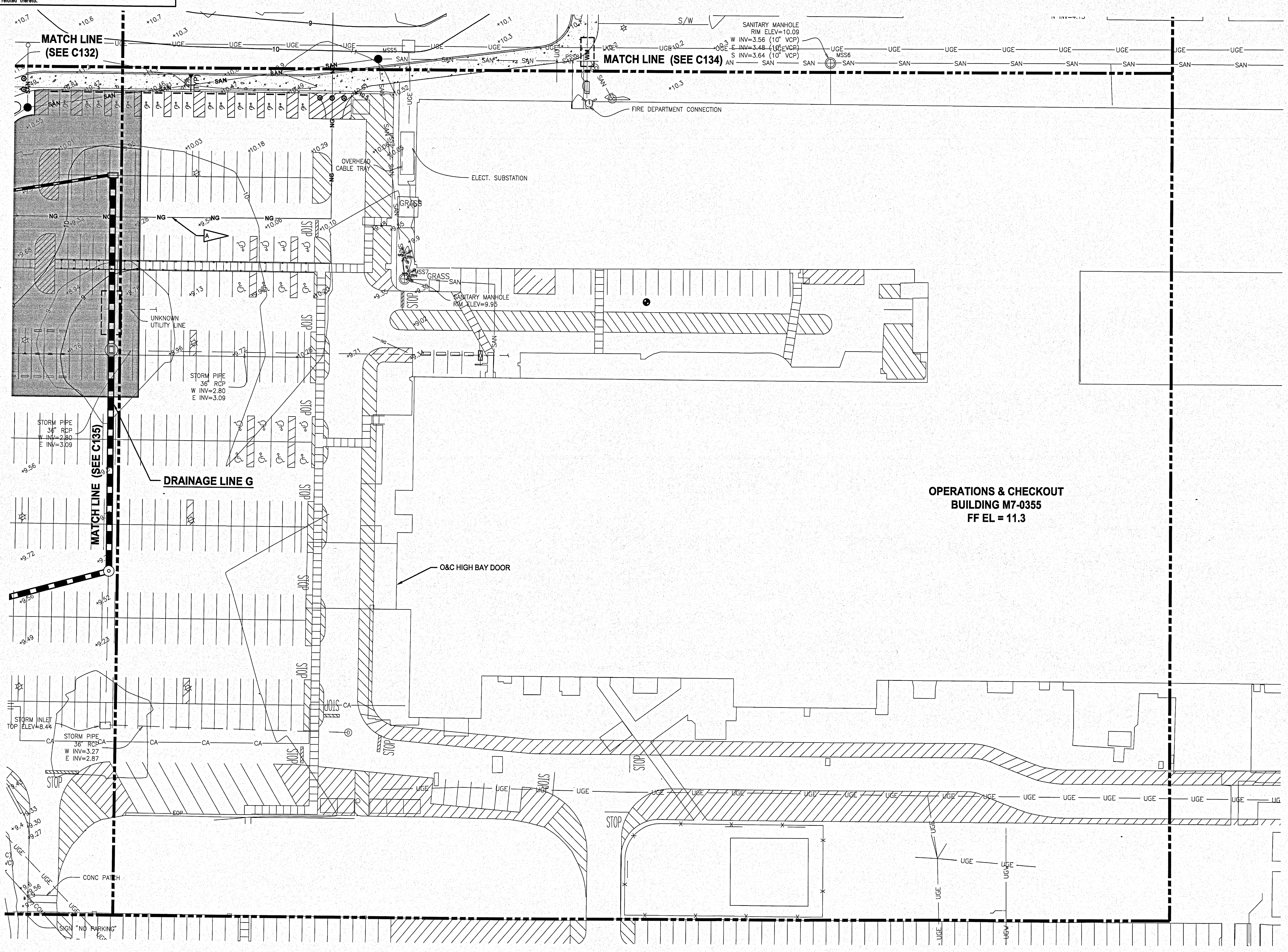

GRAPHIC SCALE

0 15 30 60 90

SCALE IN FEET
1" = 30'

-N-

SYM	ZONE	REVISIONS	DATE	APPROVED

JONES EDMUNDS

730 NE WALDO ROAD, GAINESVILLE, FLORIDA 32641 / (352) 377-5821
3910 S WASHINGTON AVE, SUITE 210, TITUSVILLE, FLORIDA 32780 / (321) 269-2950

SIGNATURES	DATE
DRAWN P. UPSTILL	12.18.13
CHECKED M. O'BRIEN	12.18.13
SUBMITTED, ARCHITECT OF RECORD W. NICKEL	12/18/13
ST of LICENSURE: FL	
LICENSE NO. 68638	
APPROVED R. KELLER	12/18/13
K. MILLER	12/19/13

NATIONAL AERONAUTICS AND SPACE ADMINISTRATION
JOHN F. KENNEDY SPACE CENTER, NASA
KENNEDY SPACE CENTER, FLORIDA

KSC CENTRAL CAMPUS
REPLACEMENT HEADQUARTERS BUILDING
PHASE 1
VOL. 1 OF 4

GRADING AND DRAINAGE PLAN

C136

FILE NO.	SIZE	DWG. NO.
C-12070.00	F	79K39622 VOL 1

PCN. NO. 98745.1a — SHEET 56

KSC FORM 1-11 (3/76)(C/G 3/94)

NOTICE: When Government drawings, specifications, or other data are used for any purpose other than in connection with a definitely related Government procurement operation, the United States Government thereby incurs no responsibility nor obligation whatsoever; and the fact that the Government may have formulated, furnished, or in any way supplied the said drawings, specifications or other data is not to be regarded by implication or otherwise as in any manner licensing the holder or any other person or corporation, or conveying any rights or permission to manufacture, use, or sell any patented invention that may in any way be related thereto.

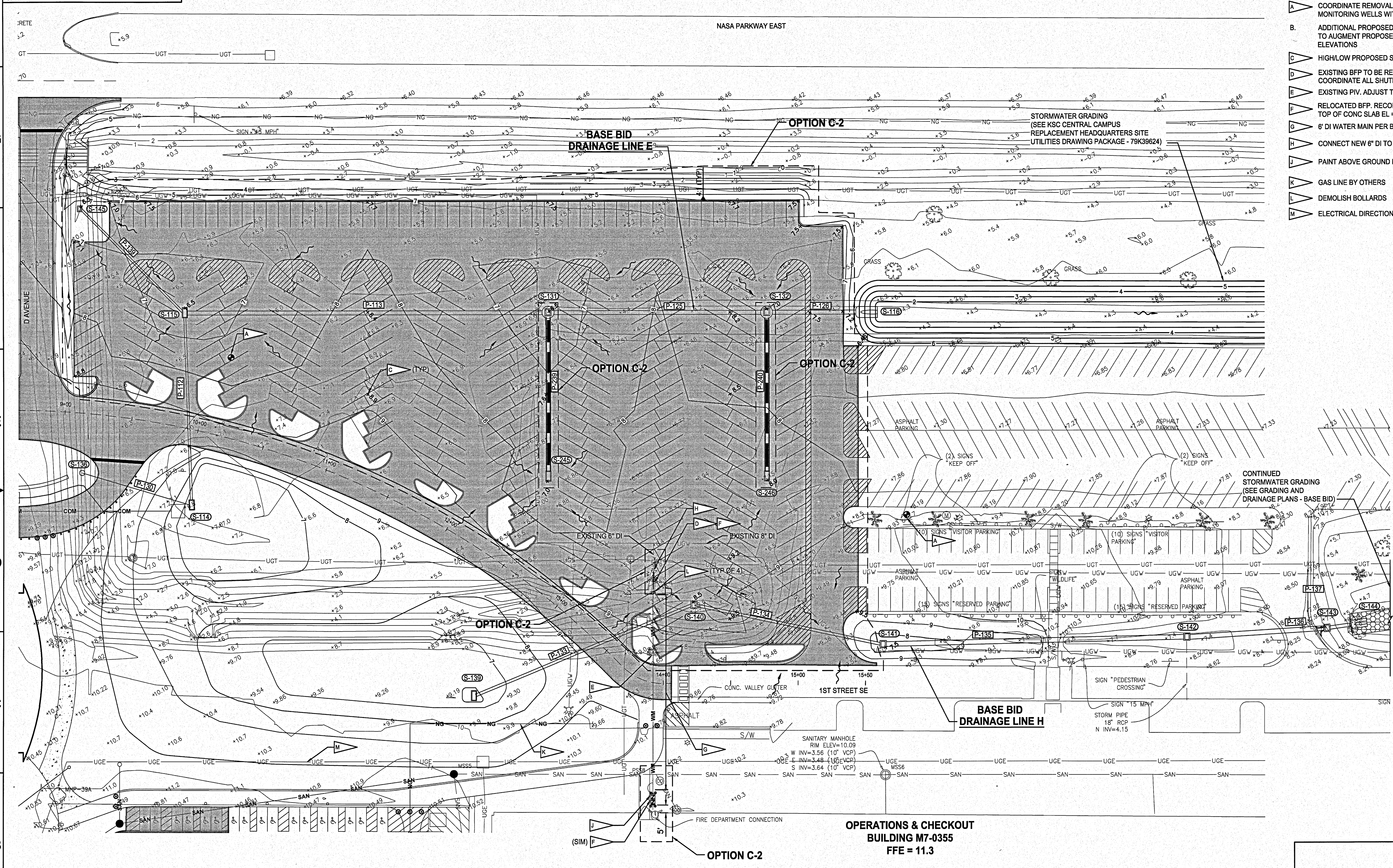

NOTES

- A — COORDINATE REMOVAL AND REPLACEMENT OF GROUNDWATER MONITORING WELLS WITH KSC REMEDIATION GROUP.
- B. ADDITIONAL PROPOSED SPOT ELEVATIONS PROVIDED ON C138 TO AUGMENT PROPOSED CONTOURS AND HIGH/LOW SPOT ELEVATIONS
- C — HIGH/LOW PROPOSED SPOT ELEVATIONS
- D — EXISTING BFP TO BE RELOCATED. REPLACE WITH 6" DI WATER MAIN. COORDINATE ALL SHUTDOWNS WITH CONTRACTING OFFICER
- E — EXISTING PIV. ADJUST TO GRADE WITHIN LANDSCAPE ISLAND
- F — RELOCATED BFP. RECONSTRUCT BFP. TOP OF CONC SLAB EL = 10.3 SEE DETAIL 4/C208
- G — 6" DI WATER MAIN PER BASE BID
- H — CONNECT NEW 6" DI TO EXISTING IN THIS VICINITY AT NEAREST JOINT
- J — PAINT ABOVE GROUND PIPING RED
- K — GAS LINE BY OTHERS
- L — DEMOLISH BOLLARDS
- M — ELECTRICAL DIRECTIONAL DRILL BY OTHERS

GRAPHIC SCALE

0 15 30 60 90

SCALE IN FEET 1" = 30'

SYM	ZONE	REVISIONS	DATE	APPROVED

JONES EDMUNDS

730 NE WALDO ROAD, GAINESVILLE, FLORIDA 32641 / (352) 377-5821
3910 S WASHINGTON AVE, SUITE 210, TITUSVILLE, FLORIDA 32780 / (321) 269-2950

SIGNATURES	DATE
DRAWN P. UPSTILL	12.18.13
CHECKED M. O'BRIEN	12.18.13
SUBMITTED ARCHITECT OF RECORD W. NICKEL, ST of LICENSURE: FL, LICENSE NO: 68638	12/18/13
APPROVED	12/18/13
K. MILLER	12/18/13

NATIONAL AERONAUTICS AND SPACE ADMINISTRATION
JOHN F. KENNEDY SPACE CENTER, NASA
KENNEDY SPACE CENTER, FLORIDA

KSC CENTRAL CAMPUS
REPLACEMENT HEADQUARTERS BUILDING
PHASE 1
VOL. 1 OF 4

GRADING AND DRAINAGE PLAN - OPTION C-2

FILE NO.	SIZE	DWG. NO.
C-12070.00	F	79K39622 VOL 1

C137

PCN. NO. 98745.1a — SHEET 57

NOTICE: When Government drawings, specifications, or other data are used for any purpose other than in connection with a definitely related Government procurement operation, the United States Government thereby incurs no responsibility nor obligation whatsoever; and the fact that the Government may have formulated, furnished, or in any way supplied the said drawings, specifications or other data is not to be regarded by implication or otherwise as in any manner licensing the holder or any other person or corporation, or conveying any rights or permission to manufacture, use, or sell any patented invention that may in any way be related thereto.

NOTES

A. PROPOSED SPOT ELEVATIONS ON A 20'x20' GRID.

B. PROPOSED SPOT ELEVATIONS PROVIDE TO AUGMENT THE PROPOSED CONTOURS AND HIGH/LOW SPOT ELEVATIONS INDICATED ON C132. REFER TO PLAN AND PROFILE VIEWS OF D AVENUE SE FOR PROFILE GRADES AND ELEVATIONS.

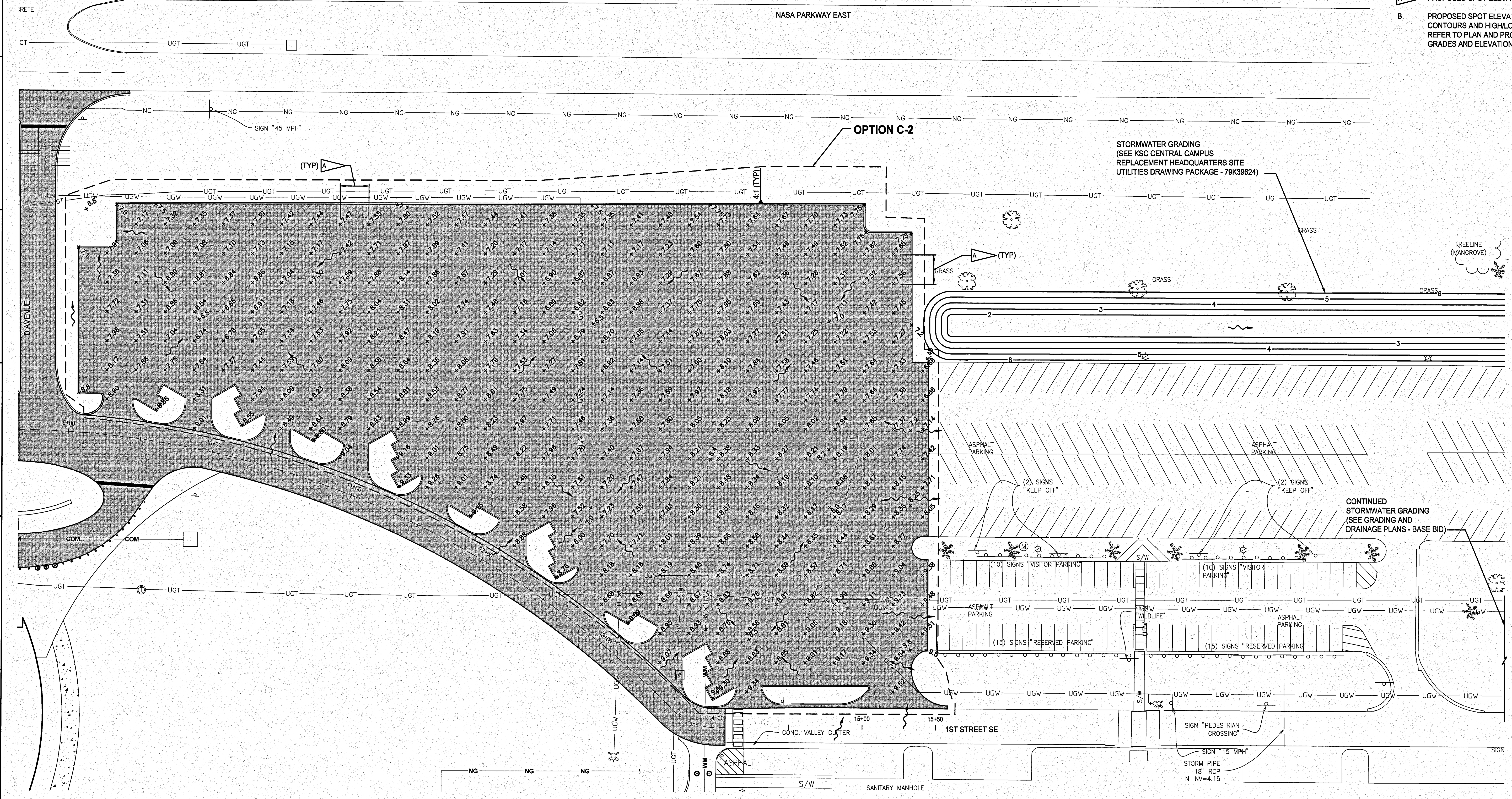

GRAPHIC SCALE

0 15 30 60 90

SCALE IN FEET
1" = 30'

SYM	ZONE		DATE	APPROVED

REVISIONS

JONES EDMUNDS
730 NE WALDO ROAD, GAINESVILLE, FLORIDA 32641 / (352) 377-5821
3910 S WASHINGTON AVE, SUITE 210, TITUSVILLE, FLORIDA 32780 / (321) 269-2950

SIGNATURES	DATE
DRAWN P. UPSTILL	12.18.13
CHECKED M. O'BRIEN	12.18.13
SUBMITTED: ARCH/ENG OF RECORD W. NICKEL	12/18/13
ST of LICENSURE: FL LICENSE NO. 68638	
APPROVED R. KOLLER	12/18/13
K. MILLER	12/19/13

NATIONAL AERONAUTICS AND SPACE ADMINISTRATION
JOHN F. KENNEDY SPACE CENTER, NASA
KENNEDY SPACE CENTER, FLORIDA

KSC CENTRAL CAMPUS
REPLACEMENT HEADQUARTERS BUILDING
PHASE 1
VOL. 1 OF 4

SUPPLEMENTAL GRADING PLAN - OPTION C-2

C138

FILE NO.	SIZE	DWG. NO.
C-12070.00	F	79K39622 VOL 1

PCN. NO. 98745.1a SHEET 58

KSC FORM 1-11 (3/76)(C/G 3/94)

NOTICE: When Government drawings, specifications, or other data are used for any purpose other than in connection with a definitely related Government procurement operation, the United States Government thereby incurs no responsibility nor obligation whatsoever; and the fact that the Government may have formulated, furnished, or in any way supplied the said drawings, specifications or other data is not to be regarded by implication or otherwise as in any manner licensing the holder or any other person or corporation, or conveying any rights or permission to manufacture, use, or sell any patented invention that may in any way be related thereto.

NOTES

- A: UTILITY CONFLICT. SEE DETAIL 1/C211
- B: PROTECT/RELOCATE MEMORIAL TREES AND SIGNS (SEE LANDSCAPE PLANS)
- C: DEMOLISH TREE

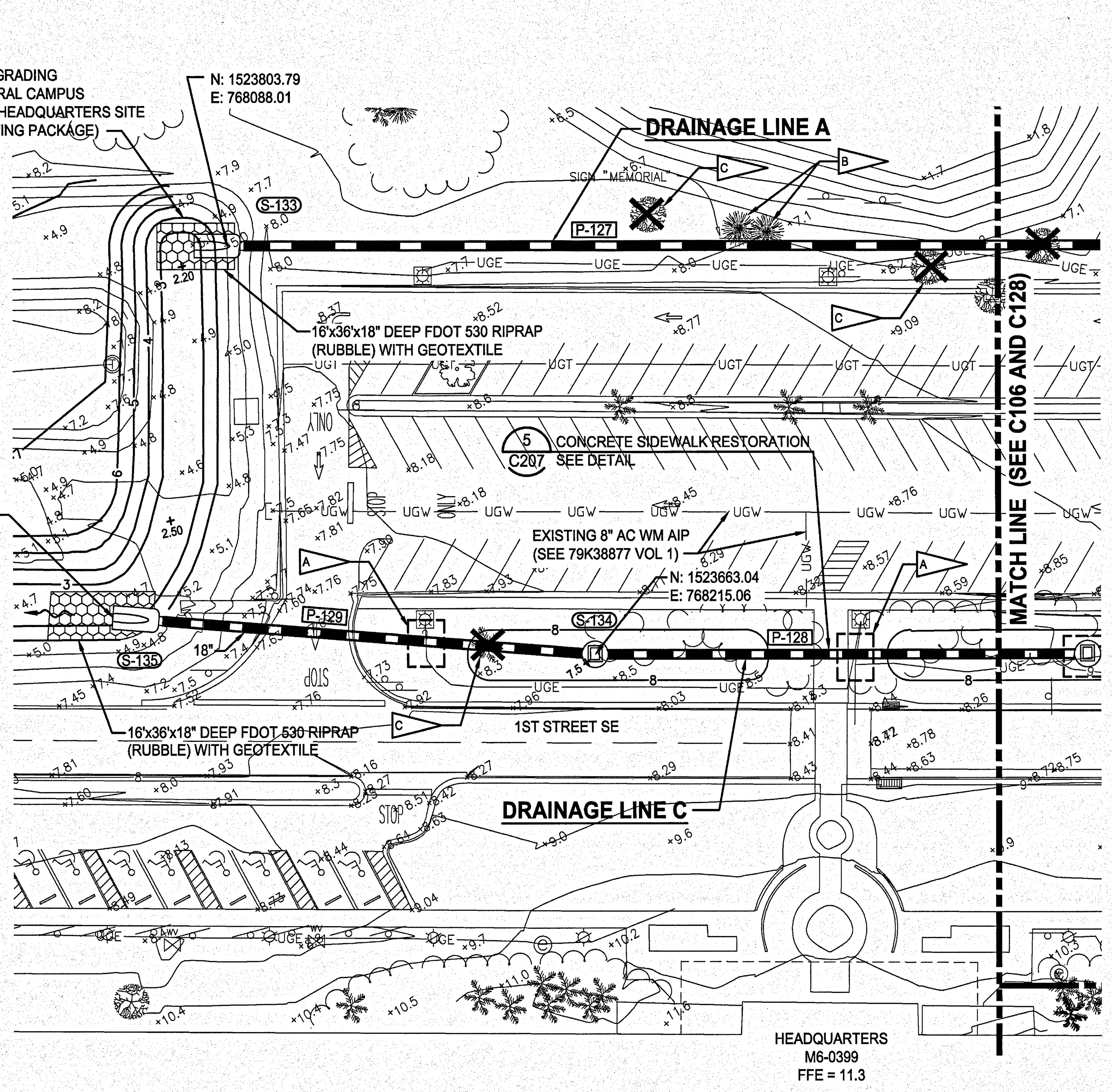

1ST STREET DRAINAGE EAST DETAIL (1/C132)

1"=30'

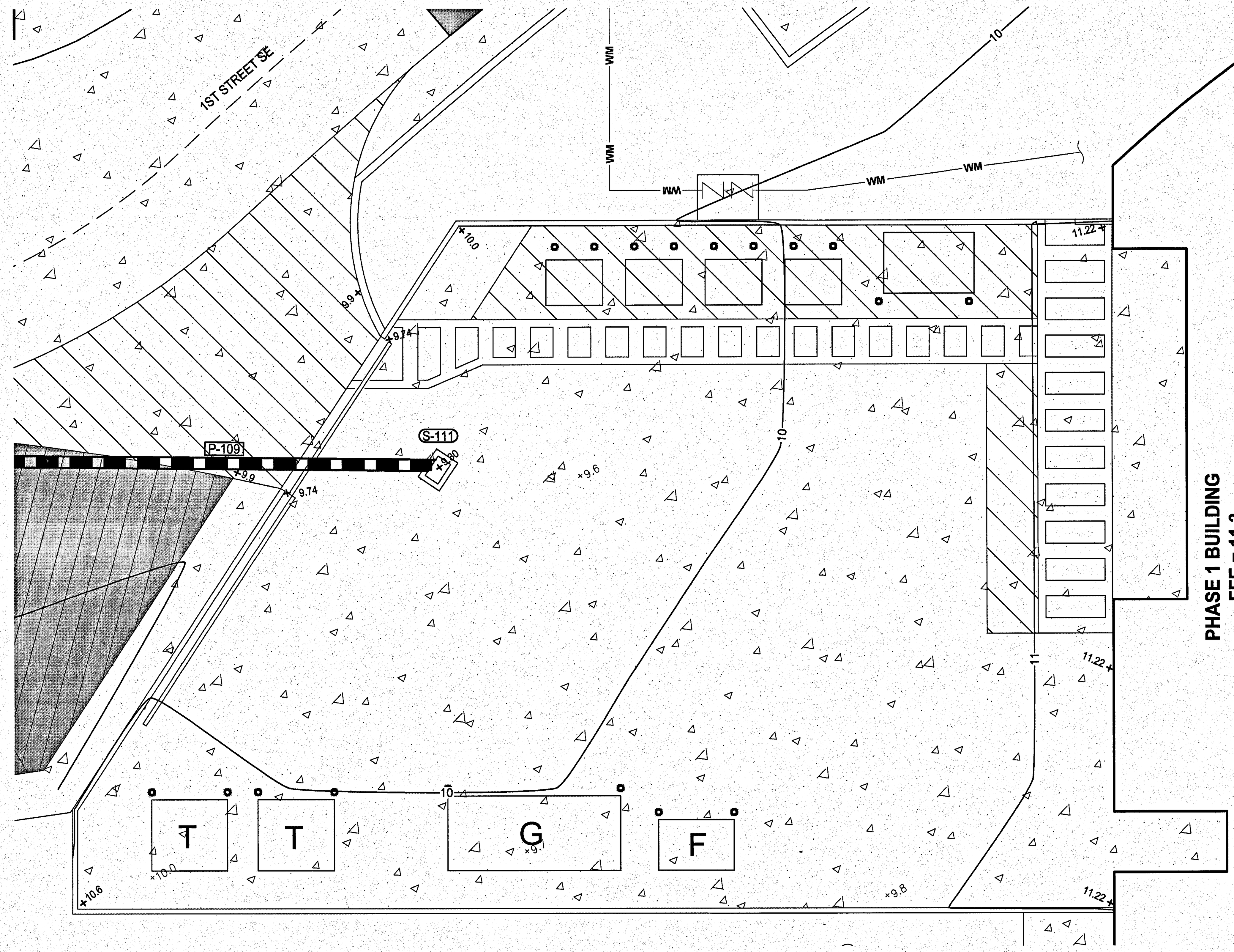

SERVICE AREA DRAINAGE DETAIL (2/C132)

1"=10'

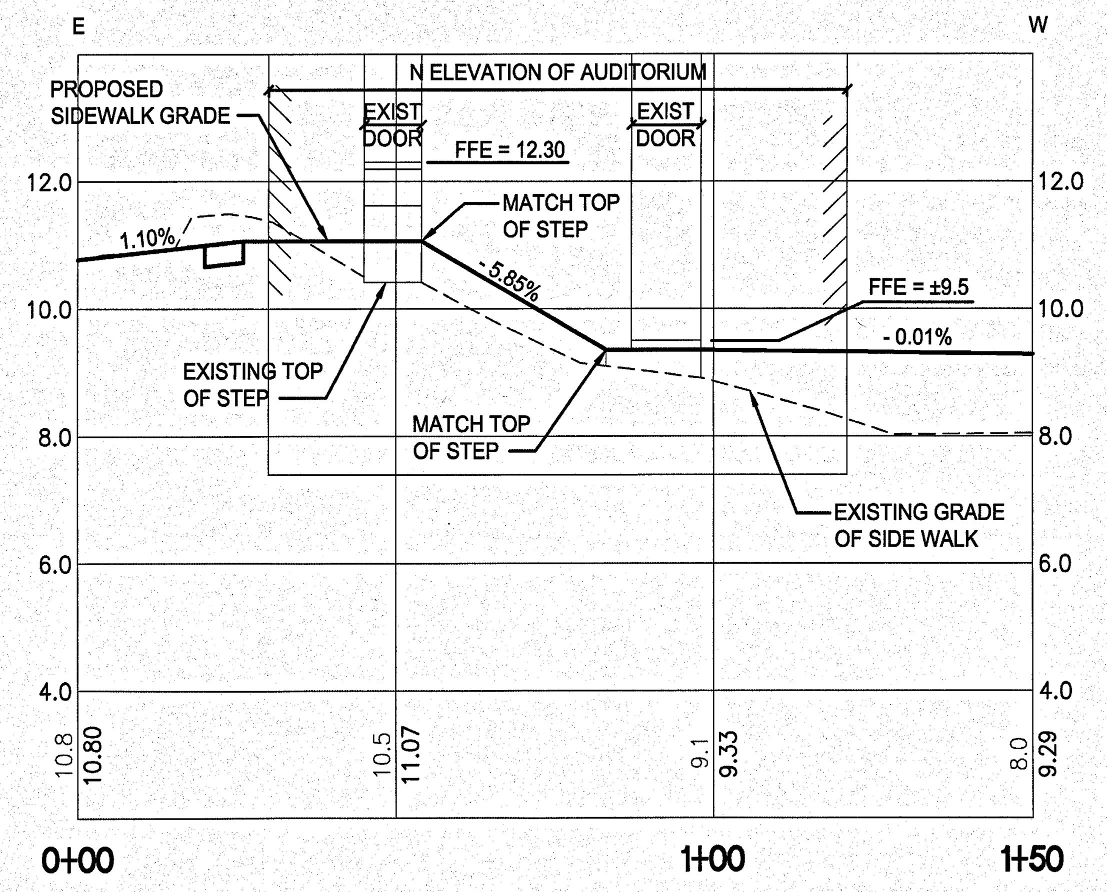

SECTION (3/C117,C135)

1"=20' H
1"=2' V

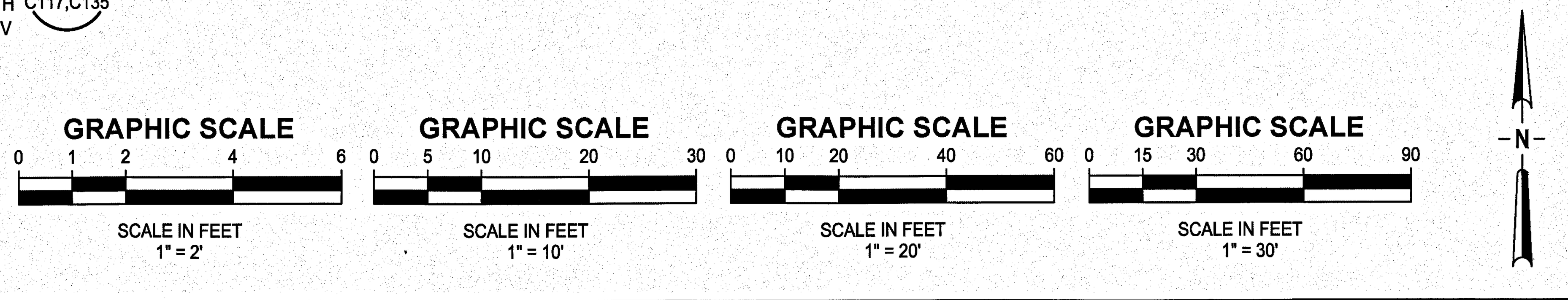

SYM	ZONE		DATE	APPROVED

REVISIONS

JONES EDMUNDS
730 NE WALDO ROAD, GAINESVILLE, FLORIDA 32641 / (352) 377-5821
3910 S WASHINGTON AVE, SUITE 210, TITUSVILLE, FLORIDA 32780 / (321) 269-2950

SIGNATURES	DATE
DRAWN P. UPSTILL	12.18.13
CHECKED M. O'BRIEN	12.18.13
SUBMITTED: ARCH/ENG OF RECORD W. NICKEL	12/18/13
ST of LICENSURE: FL LICENSE NO: 68638	
APPROVED R. KOLLER	12/18/13
K. MILLER	12/19/13

NATIONAL AERONAUTICS AND SPACE ADMINISTRATION
JOHN F. KENNEDY SPACE CENTER, NASA
KENNEDY SPACE CENTER, FLORIDA

KSC CENTRAL CAMPUS
REPLACEMENT HEADQUARTERS BUILDING
PHASE 1
VOL. 1 OF 4

MISCELLANEOUS GRADING AND DRAINAGE DETAILS

FILE NO.	SIZE	DWG. NO.
C-12070.00	F	79K39622 VOL 1

PCN. NO. 98745.1a

SHEET 59

C139

KSC FORM 1-11 (3/76)(C/G 3/94)

NOTICE: When Government drawings, specifications, or other data are used for any purpose other than in connection with a definitely related Government procurement operation, the United States Government thereby incurs no responsibility nor obligation whatsoever; and the fact that the Government may have formulated, furnished, or in any way supplied the said drawings, specifications or other data is not to be regarded by implication or otherwise as in any manner licensing the holder or any other person or corporation, or conveying any rights or permission to manufacture, use, or sell any patented invention that may in any way be related thereto.

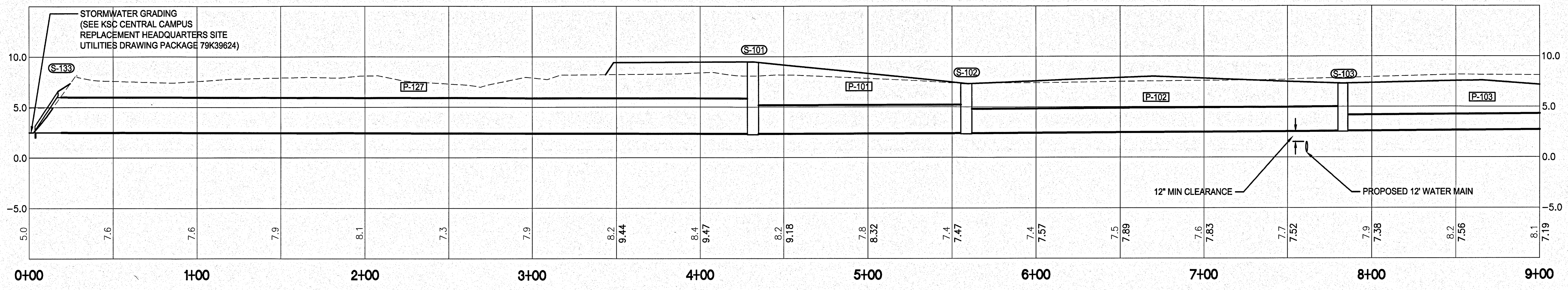

DRAINAGE LINE A
1"=30' H
1"=5' V

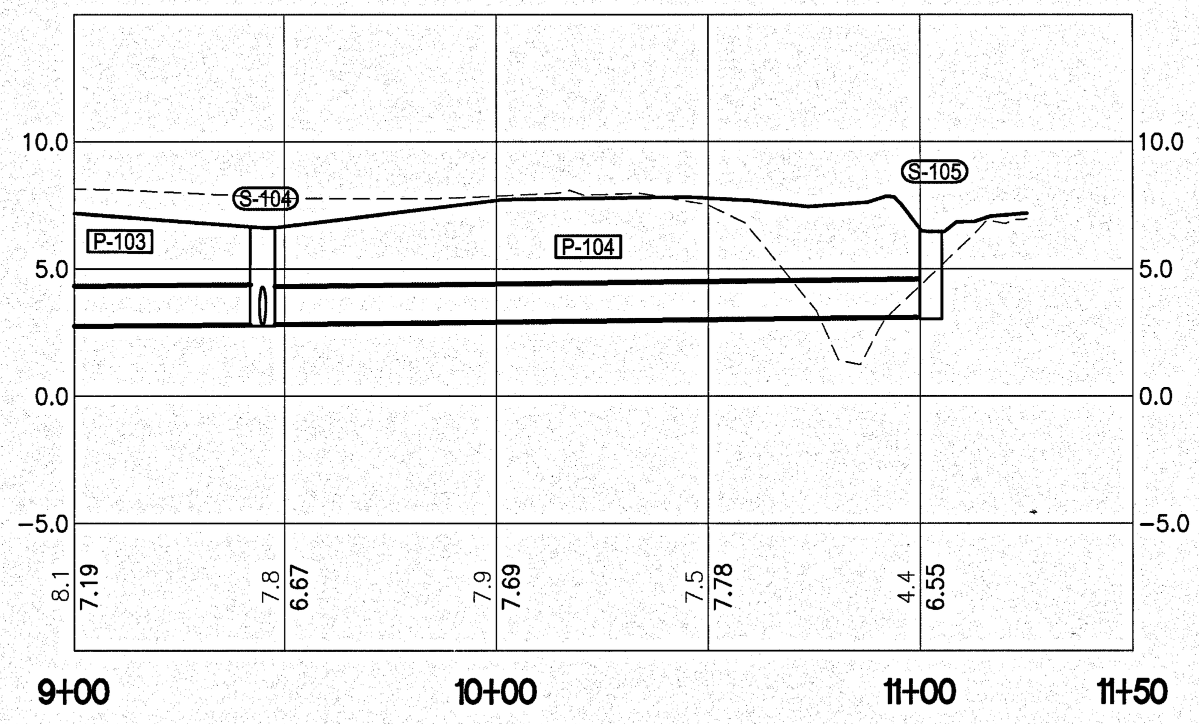

DRAINAGE LINE A
1"=30' H
1"=3' V

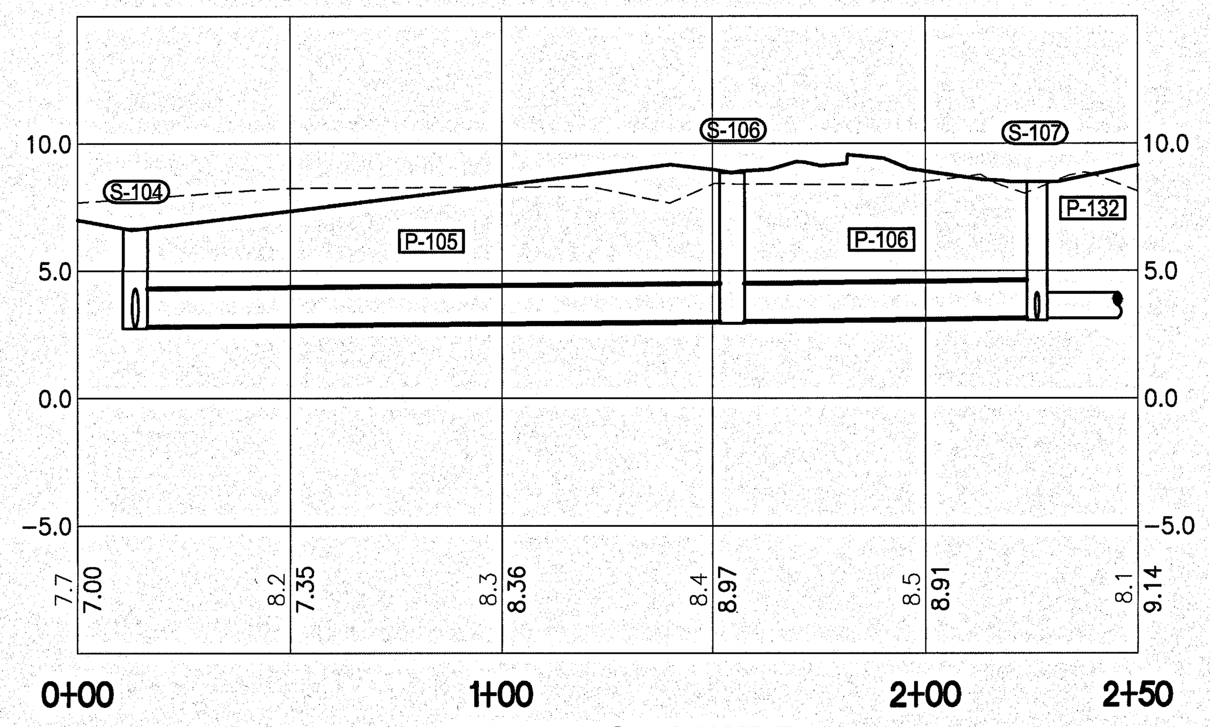

DRAINAGE LINE B
1"=30' H
1"=5' V

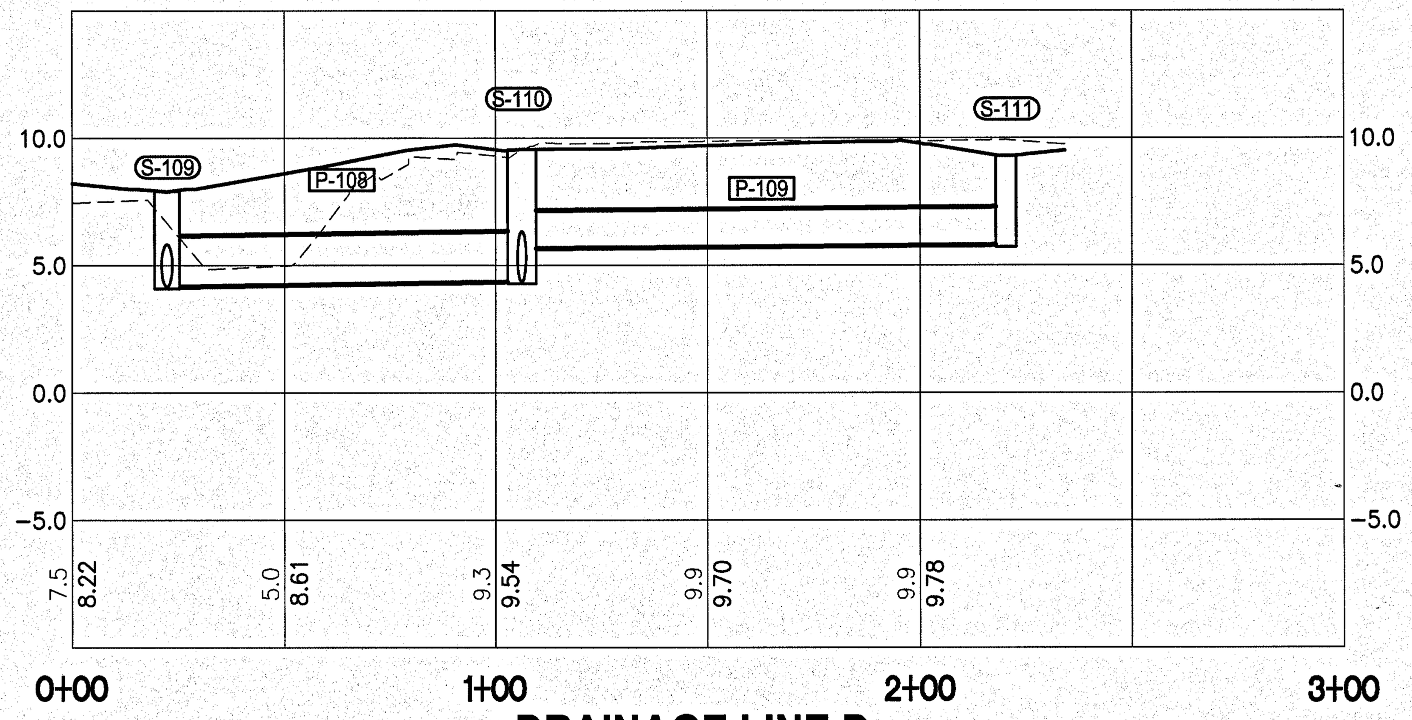

DRAINAGE LINE D
1"=30' H
1"=3' V

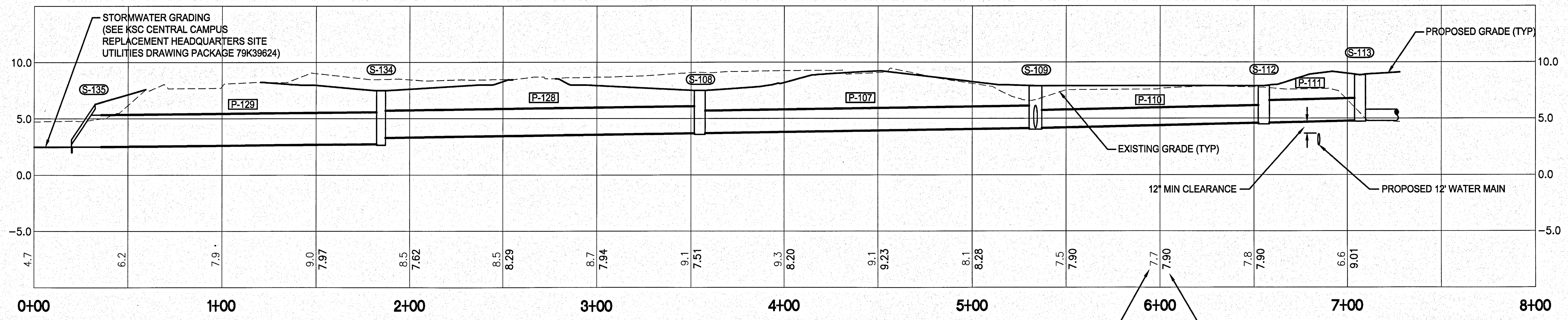

DRAINAGE LINE C
1"=30' H
1"=5' V

GRAPHIC SCALE
0 15 30 60 90
SCALE IN FEET
1" = 30' H

GRAPHIC SCALE
0 2.5 5 10 20
SCALE IN FEET
1" = 5' V

SYM	ZONE	REVISIONS	DATE	APPROVED

JONES EDMUNDS
730 NE WALDO ROAD, GAINESVILLE, FLORIDA 32641 / (352) 377-5821
3910 S WASHINGTON AVE, SUITE 210, TITUSVILLE, FLORIDA 32780 / (321) 269-2950

SIGNATURES	DATE
DRAWN P. UPSTILL	12.18.13
CHECKED M. O'BRIEN	12.18.13
SUBMITTED: ARCH/ENG OF RECORD W. NICKEL	12/18/13
ST of LICENSURE: FL LICENSE NO: 68638	
APPROVED R. KOLLER	12/18/13
K. MILLER	12/19/13

NATIONAL AERONAUTICS AND SPACE ADMINISTRATION
JOHN F. KENNEDY SPACE CENTER, NASA
KENNEDY SPACE CENTER, FLORIDA

KSC CENTRAL CAMPUS
REPLACEMENT HEADQUARTERS BUILDING
PHASE 1
VOL. 1 OF 4

STORM SEWER AND DITCH PROFILES

FILE NO. C-12070.00 | SIZE F | DWG. NO. 79K39622 VOL 1
PCN. NO. 98745.1a | SHEET 60

C140

NOTICE: When Government drawings, specifications, or other data are used for any purpose other than in connection with a definitely related Government procurement operation, the United States Government thereby incurs no responsibility nor obligation whatsoever; and the fact that the Government may have formulated, furnished, or in any way supplied the said drawings, specifications or other data is not to be regarded by implication or otherwise as in any manner licensing the holder or any other person or corporation, or conveying any rights or permission to manufacture, use, or sell any patented invention that may in any way be related thereto.

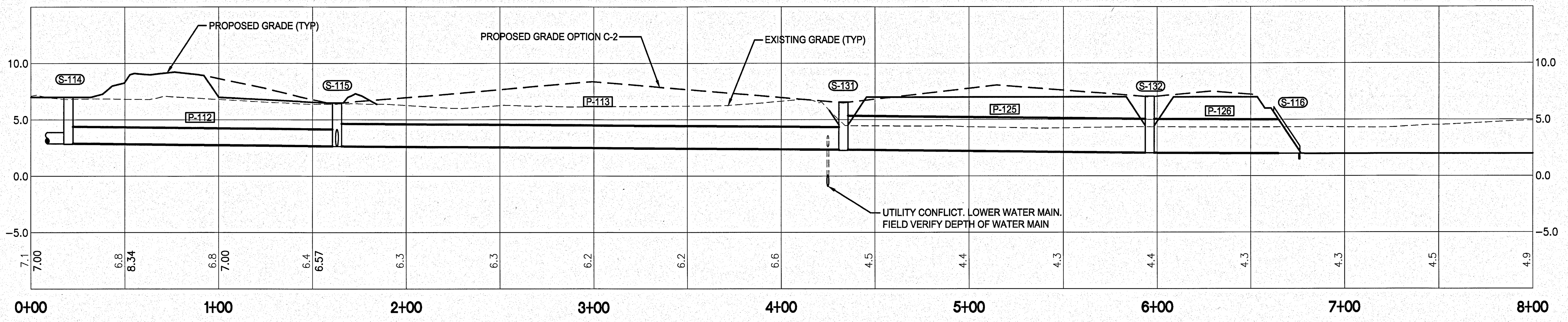

DRAINAGE LINE E

1"=30' H
1"=5' V

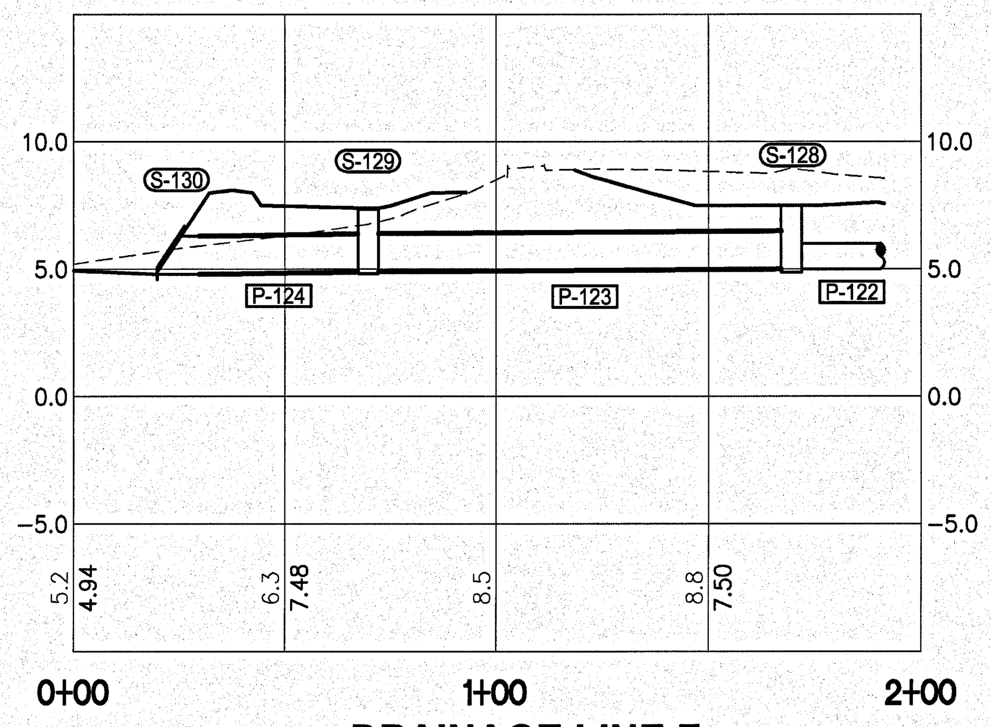

DRAINAGE LINE F

1"=30' H
1"=5' V

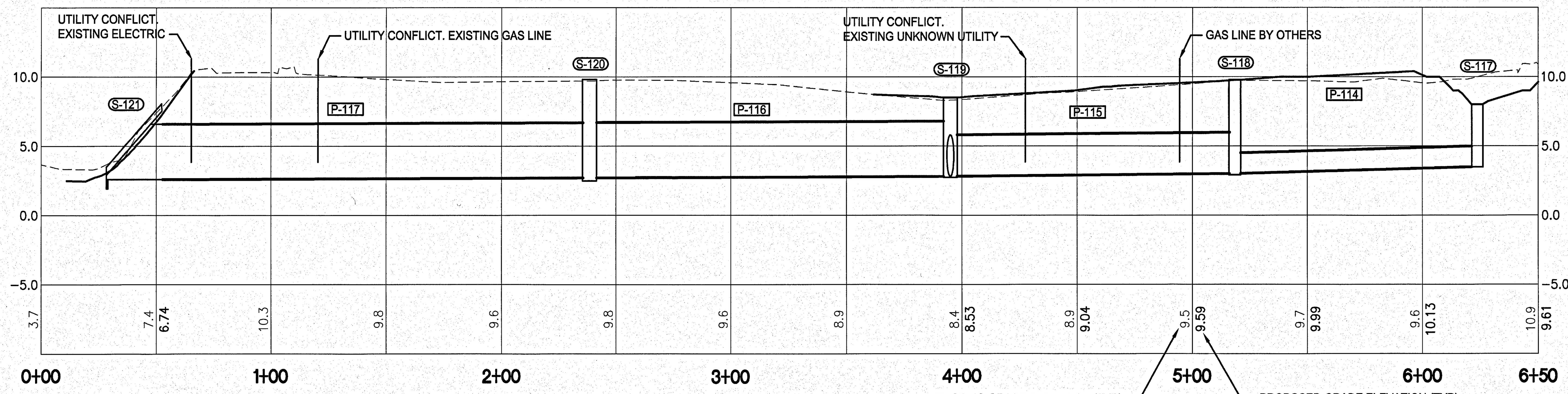

DRAINAGE LINE G

1"=30' H
1"=5' V

GRAPHIC SCALE
0 15 30 60 90
SCALE IN FEET
1" = 30' H

GRAPHIC SCALE
0 2.5 5 10 20
SCALE IN FEET
1" = 5' V

SYM	ZONE		DATE	APPROVED

REVISIONS

JONES EDMUNDS
730 NE WALDO ROAD, GAINESVILLE, FLORIDA 32641 / (352) 377-5821
3910 S WASHINGTON AVE, SUITE 210, TITUSVILLE, FLORIDA 32780 / (321) 269-2950

SIGNATURES	DATE
DRAWN P. UPSTILL	12.18.13
CHECKED M. O'BRIEN	12.18.13
SUBMITTED: ARCH/ENG OF RECORD W. NICKEL	12/18/13
ST of LICENSURE: FL LICENSE NO: 68638	
APPROVED P. KOLLER	12/18/13
K. MILLER	12/19/13

NATIONAL AERONAUTICS AND SPACE ADMINISTRATION
JOHN F. KENNEDY SPACE CENTER, NASA
KENNEDY SPACE CENTER, FLORIDA

KSC CENTRAL CAMPUS
REPLACEMENT HEADQUARTERS BUILDING
PHASE 1
VOL. 1 OF 4
STORM SEWER AND DITCH PROFILES

C141

FILE NO.	SIZE	DWG. NO.
C-12070.00	F	79K39622 VOL 1

PCN. NO. 98745.1a
SHEET 61

NOTICE: When Government drawings, specifications, or other data are used for any purpose other than in connection with a definitely related Government procurement operation, the United States Government thereby incurs no responsibility nor obligation whatsoever; and the fact that the Government may have formulated, furnished, or in any way supplied the said drawings, specifications or other data is not to be regarded by implication or otherwise as in any manner licensing the holder or any other person or corporation, or conveying any rights or permission to manufacture, use, or sell any patented invention that may in any way be related thereto.

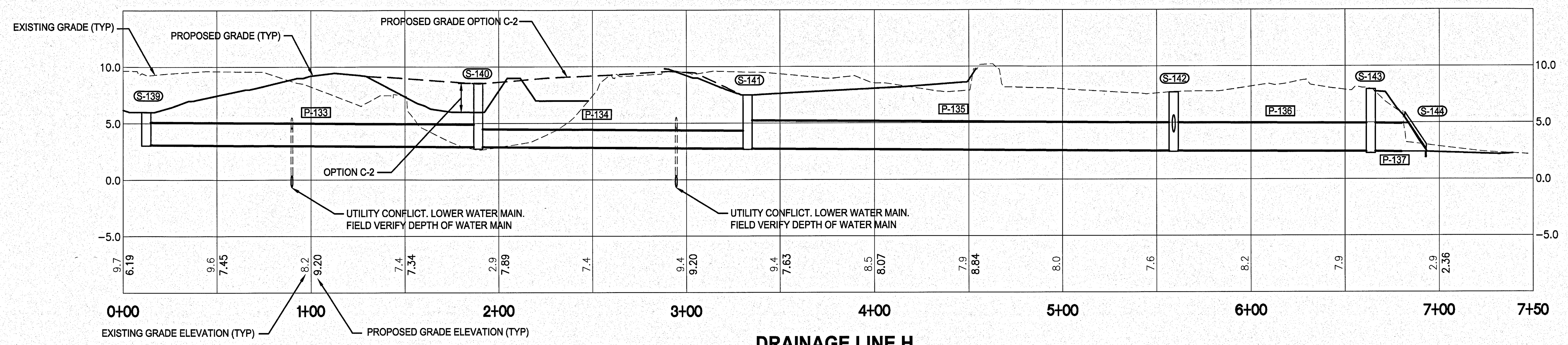

DRAINAGE LINE H

1"=30' H
1"=5' V

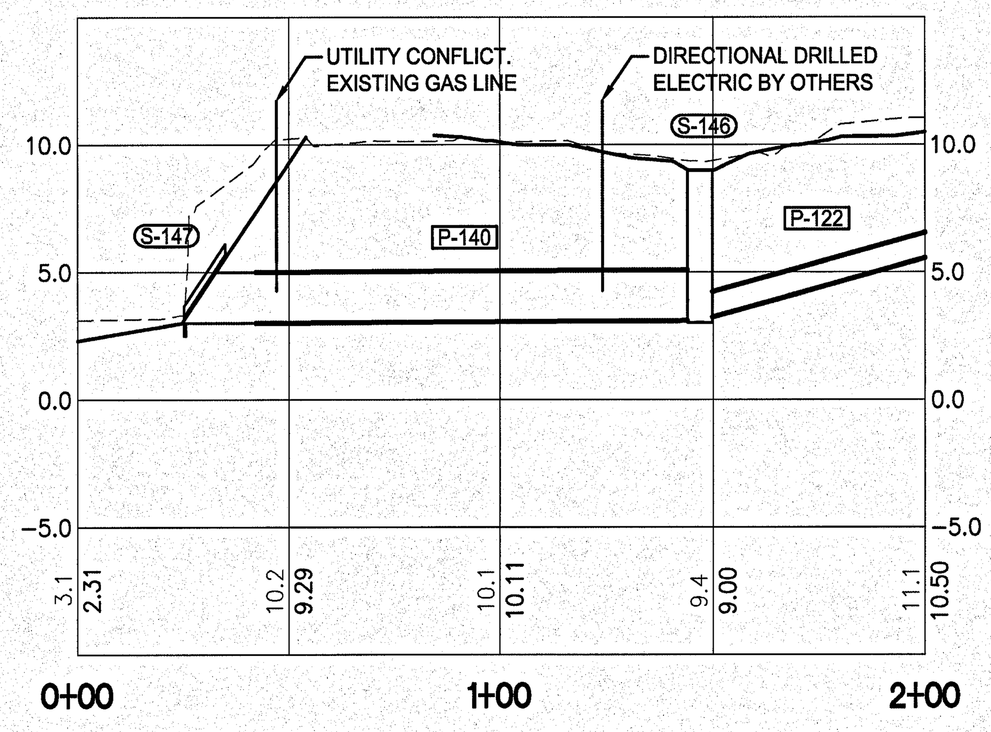

DRAINAGE LINE J

1"=30' H
1"=5' V

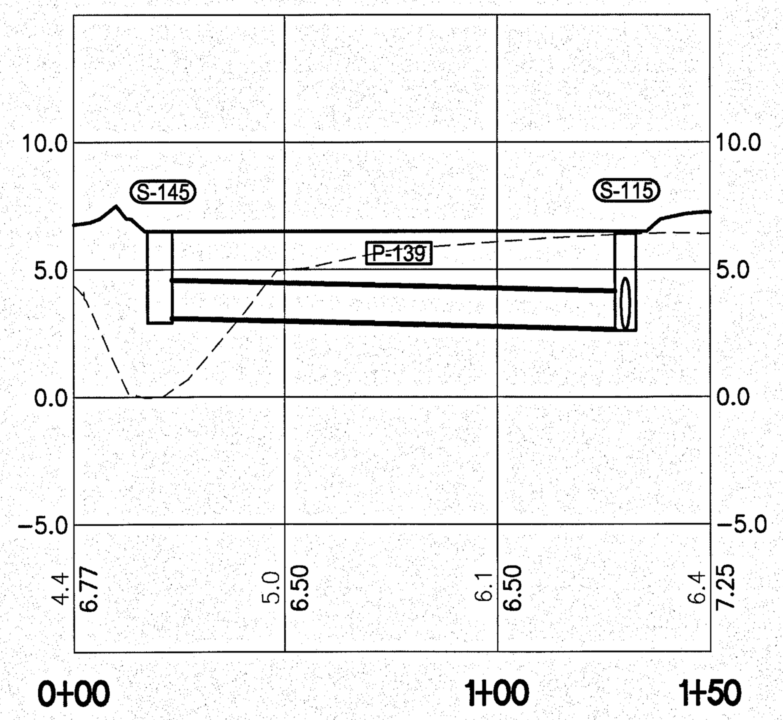

DRAINAGE LINE K

1"=30' H
1"=5' V

GRAPHIC SCALE

0 15 30 60 90

SCALE IN FEET
1" = 30' H

GRAPHIC SCALE

0 2.5 5 10 20

SCALE IN FEET
1" = 5' V

SYM	ZONE		DATE	APPROVED
		REVISIONS		

JONES EDMUNDS
730 NE WALDO ROAD, GAINESVILLE, FLORIDA 32641 / (352) 377-5821
3910 S WASHINGTON AVE, SUITE 210, TITUSVILLE, FLORIDA 32780 / (321) 269-2950

SIGNATURES	DATE
DRAWN P. UPSTILL	12.18.13
CHECKED M. O'BRIEN	12.18.13
SUBMITTED: ARCH/ENG OF RECORD W. NICKEL	12/18/13
ST of LICENSURE: FL LICENSE NO: 68638	
APPROVED R. KOLLER	12/18/13
K. MILLER	12/19/13

NATIONAL AERONAUTICS AND SPACE ADMINISTRATION
JOHN F. KENNEDY SPACE CENTER, NASA
KENNEDY SPACE CENTER, FLORIDA

KSC CENTRAL CAMPUS
REPLACEMENT HEADQUARTERS BUILDING
PHASE 1
VOL. 1 OF 4
STORM SEWER AND DITCH PROFILES

FILE NO.	SIZE	DWG. NO.
C-12070.00	F	79K39622 VOL 1

PCN. NO. 98745.1a
SHEET 62

C142

NOTICE: When Government drawings, specifications, or other data are used for any purpose other than in connection with a definitely related Government procurement operation, the United States Government thereby incurs no responsibility nor obligation whatsoever; and the fact that the Government may have formulated, furnished, or in any way supplied the said drawings, specifications or other data is not to be regarded by implication or otherwise as in any manner licensing the holder or any other person or corporation, or conveying any rights or permission to manufacture, use, or sell any patented invention that may in any way be related thereto.

DRAINAGE STRUCTURE TABLE

STRUCTURE NO	STRUCTURE TYPE	FDOT INDEX	INVERT ELEVATION (FT)	GRATE/ RIM/ TOP ELEVATION (FT)
S-101	10' DIA J MANHOLE	200,201	2.35	9.5
S-102	10' DIA J MANHOLE W/ D INLET GRATE	200,201,232	2.45	7.30
S-103	6' DIA J MANHOLE W/ D INLET GRATE	232	2.60	7.30
S-104	6' DIA J MANHOLE W/ D INLET GRATE	232	2.90	6.60
S-105	C INLET	232	3.10	6.60
S-106	D INLET	232	3.00	8.80
S-107	C INLET	232	3.15	8.50
S-108	8' DIA J MANHOLE W/ D INLET GRATE	232	3.70	7.50
S-109	8' DIA J MANHOLE W/ D INLET GRATE	200,201,232	4.15	7.90
S-110	6' DIA J MANHOLE	200, 201	E: 5.65 N: 4.35 S: 4.35 W: MATCH EXISTING	9.60
S-111	C INLET	232	5.80	9.30
S-112	D INLET	232	4.60	7.90
S-113	D INLET	232	4.75	8.80
S-114	D INLET	232	2.90	6.5
S-115	D INLET	232	2.65	6.5
S-116	MES	272	2.00	N/A
S-117	C INLET	232	3.50	8.00
S-118	E INLET	232	3.10	9.75
S-119	8' DIA J MANHOLE W/ D INLET GRATE	200, 201, & 232	2.80	8.50
S-120	10' DIA J MANHOLE W/ D INLET GRATE	200 & 201	N,W: 2.70 S: MATCH EXISTING	9.60
S-121	MES	272	2.45	N/A
S-124	NYLOPLAST BASIN	N/A	6.30	9.5
S-125	NYLOPLAST BASIN	N/A	6.10	8.5
S-126	NYLOPLAST BASIN	N/A	5.90	8.5
S-127	NYLOPLAST BASIN	N/A	6.20	8.5
S-128	D INLET	232	5.00	7.50
S-129	C INLET	232	4.80	7.40
S-130	MES	272	4.60	N/A
S-131	H INLET	232	2.30, S: 2' SLOT 4.5, FUTURE S: 2.70	6.5
S-132	H INLET	232	2.10, S: 2' SLOT 4.2, FUTURE S: 2.70	7.0
S-133	MES	272	2.20	N/A
S-134	10' DIA J MANHOLE W/ D INLET GRATE	232	W: 2.75 E: 3.30	7.50
S-135	MES	272	2.50	N/A
S-136	NYLOPLAST BASIN	N/A	6.1	9.7
S-137	NYLOPLAST BASIN	N/A	5.9	9.3
S-138	NYLOPLAST BASIN	N/A	5.7	9.7
S-139	D INLET	232	3.1	6.5
S-140	D INLET	232	2.9	6.0 BASE BID; 8.5 OPTION C-2
S-141	D INLET	232	2.75	7.5
S-142	D INLET	232	E,W: 2.5 S: MATCH EXISTING	7.5
S-143	D INLET	232	2.40	7.8
S-144	MES	272	2.35	N/A
S-145	C INLET	232	3.10	6.5
S-146	D INLET	232	3.20	9.0
S-147	MES	272	3.0	N/A
S-148	MES	272	6.75	N/A
S-149	MES	272	6.50	N/A

OPTION C-2

S-245	D INLET	232	3.0	7.0
S-246	D INLET	232	3.0	8.0

DRAINAGE PIPING TABLE

PIPE NO	STRUCTURE U/S	STRUCTURE D/S	LENGTH (FT) INCL MES	DIAMETER (IN)	MATERIAL
P-101	S-102	S-101	127	34X53	RCP
P-102	S-103	S-102	226	29X45	RCP
P-103	S-104	S-103	163	19x30	RCP
P-104	S-105	S-104	158	18	RCP
P-105	S-106	S-104	142	18	RCP
P-106	S-107	S-106	71	18	RCP
P-107	S-109	S-108	179	24X38	RCP
P-108	S-110	S-109	84	24	RCP
P-109	S-111	S-110	114	18	RCP
P-110	S-112	S-109	122	19X30	RCP
P-111	S-113	S-112	52	24	RCP
P-112	S-114	S-115	144	18	RCP
P-113	S-115	S-131	270	24	RCP
P-114	S-117	S-118	105	18	RCP
P-115	S-118	S-119	124	36	RCP
P-116	S-119	S-120	155	48	RCP
P-117	S-120	S-121	203	48	RCP
P-119	S-124	S-125	60	12	HDPE
P-120	S-125	S-126	35	12	HDPE
P-121	S-127	S-126	98	12	HDPE
P-122	S-126	S-128	81	12	HDPE
P-123	S-128	S-129	100	18	RCP
P-124	S-129	S-130	51	18	RCP
P-125	S-131	S-132	163	29X45	RCP
P-126	S-132	S-116	85	36	RCP
P-127	S-101	S-133	416	42	RCP
P-128	S-108	S-134	170	29X45	RCP
P-129	S-134	S-135	167	34X53	RCP
P-130	S-136	S-114	52	12	HDPE
P-131	S-137	S-138	52	12	HDPE
P-132	S-138	S-107	69	12	HDPE
P-133	S-139	S-140	178	24	RCP
P-134	S-140	S-141	129	19X30	RCP
P-135	S-141	S-142	259	30	RCP
P-136	S-142	S-143	105	30	RCP
P-137	S-143	S-144	27	30	RCP
P-138	FUTURE	S-110	4	24	RCP
P-139	S-145	S-115	109	18	RCP
P-140	S-146	S-147	120	24	RCP
P-141	S-148	S-149	24	15	hDPE

OPTION C-2

P-239	S-245	S-131	122	18	RCP
P-240	S-246	S-132	122	18	RCP

SYM	ZONE		DATE	APPROVED

REVISIONS

JONES EDMUNDS
730 NE WALDO ROAD, GAINESVILLE, FLORIDA 32641 / (352) 377-5821
3910 S WASHINGTON AVE, SUITE 210, TITUSVILLE, FLORIDA 32780 / (321) 269-2950

SIGNATURES	DATE
DRAWN P. UPSTILL	12.18.13
CHECKED M. O'BRIEN	12.18.13
SUBMITTED/ARCH/ENG OF RECORD W. NICKEL	12/18/13
ST of LICENSURE: FL LICENSE NO: 68638	
APPROVED R. KOLLER	12/18/13
K. MILLER	12/19/13

NATIONAL AERONAUTICS AND SPACE ADMINISTRATION
JOHN F. KENNEDY SPACE CENTER, NASA
KENNEDY SPACE CENTER, FLORIDA

KSC CENTRAL CAMPUS
REPLACEMENT HEADQUARTERS BUILDING
PHASE 1
VOL. 1 OF 4

DRAINAGE PIPES AND STRUCTURE TABLES

C143

FILE NO. C-12070.00 | SIZE F | DWG. NO. 79K39622 VOL 1

PCN. NO. 98745.1a | SHEET 63

KSC FORM 1-11 (3/76)(C/G 3/94)

NOTICE: When Government drawings, specifications, or other data are used for any purpose other than in connection with a definitely related Government procurement operation, the United States Government thereby incurs no responsibility nor obligation whatsoever; and the fact that the Government may have formulated, furnished, or in any way supplied the said drawings, specifications or other data is not to be regarded by implication or otherwise as in any manner licensing the holder or any other person or corporation, or conveying any rights or permission to manufacture, use, or sell any patented invention that may in any way be related thereto.

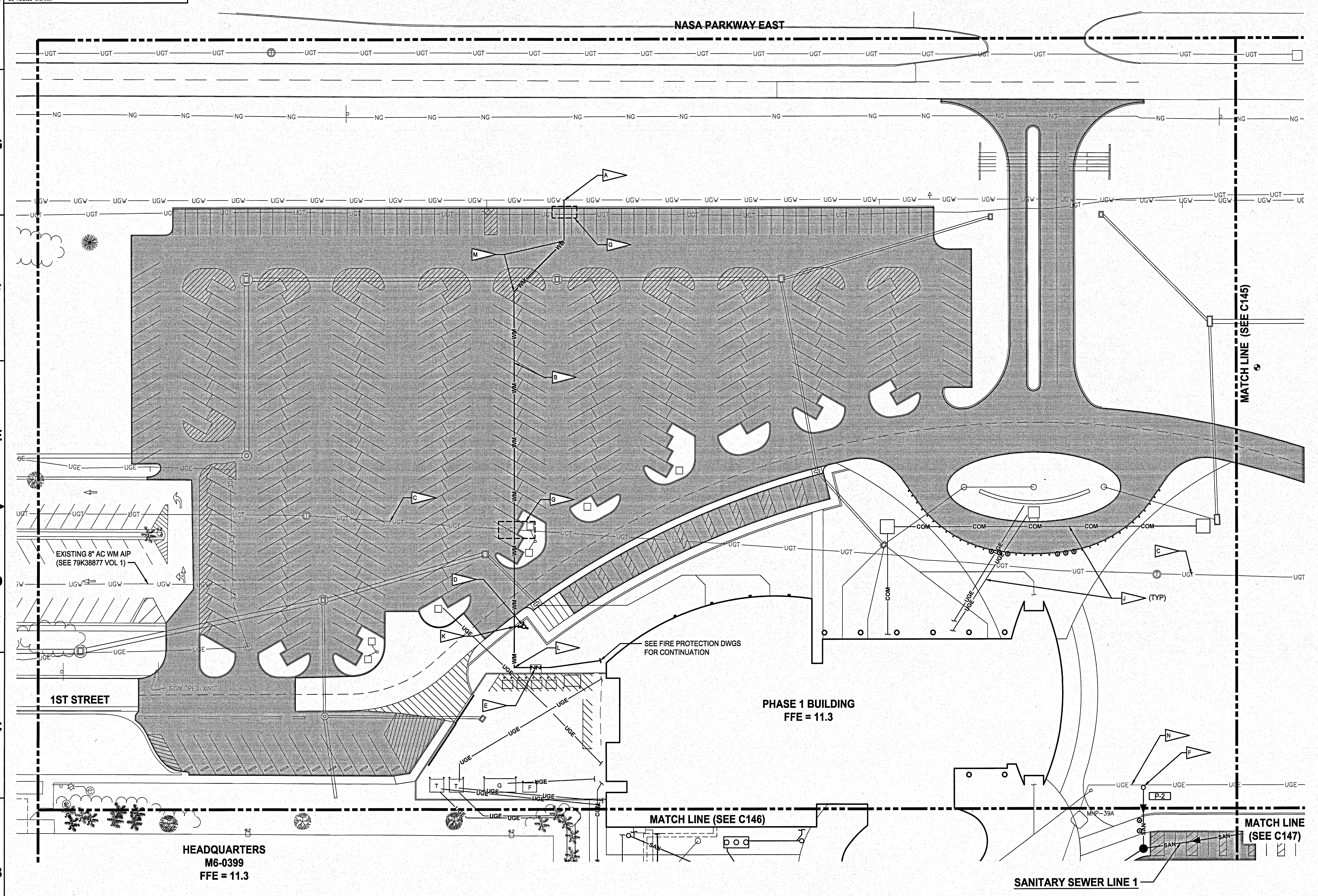

NOTES

- A. CONNECT TO PLUGGED 12" WATER GATE VALVE, INSTALLED BY OTHERS (DWG 79K38877)
- B. 12" DI WATER MAIN
- C. 4'x2' CONCRETE COMMUNICATIONS DUCT BANK SHALL NOT BE DISTURBED.
- D. FIRE HYDRANT, SEE DETAIL 1/C208
- E. 12" DOUBLE CHECK BACKFLOW PREVENTER SEE DETAIL 3/C208
- F. CLEANOUT. SEE DETAIL 2/C208
- G. UTILITY CONFLICT. SEE DETAIL 1/C211
- H. REPLACE ANY EXISTING CONCRETE DAMAGED DURING CONSTRUCTION. SEE DETAIL 4/C207
- J. UNDERGROUND UTILITIES (SEE ELECTRICAL PLANS)
- K. 12"x12"x6" DI TEE
- L. 12" 90° DI BEND
- M. 12" 45° DI BEND
- N. DIRECTIONAL DRILL ELECTRICAL BY OTHERS

SYM	ZONE	REVISIONS	DATE	APPROVED

JONES EDMUNDS
730 NE WALDO ROAD, GAINESVILLE, FLORIDA 32641 / (352) 377-5821
3910 S WASHINGTON AVE, SUITE 210, TITUSVILLE, FLORIDA 32780 / (321) 269-2950

SIGNATURES	DATE
DRAWN P. UPSTILL	12.18.13
CHECKED M. O'BRIEN	12.18.13
SUBMITTED: ARCH/ENG OF RECORD W. NICKEL	12/18/13
ST of LICENSURE: FL LICENSE NO: 68638	
APPROVED [K]. KOLLER	12/18/13
K. MILLER	12/9/13

NATIONAL AERONAUTICS AND SPACE ADMINISTRATION
JOHN F. KENNEDY SPACE CENTER, NASA
KENNEDY SPACE CENTER, FLORIDA

KSC CENTRAL CAMPUS
REPLACEMENT HEADQUARTERS BUILDING
PHASE 1
VOL. 1 OF 4

UTILITIES PLAN

C144

FILE NO. C-12070.00 | SIZE F | DWG. NO. 79K39622 VOL 1
PCN. NO. 98745.1a | SHEET 64

KSC FORM 1-11 (3/76)(C/G 3/94)

NOTICE: When Government drawings, specifications, or other data are used for any purpose other than in connection with a definitely related Government procurement operation, the United States Government thereby incurs no responsibility nor obligation whatsoever; and the fact that the Government may have formulated, furnished, or in any way supplied the said drawings, specifications or other data is not to be regarded by implication or otherwise as in any manner licensing the holder or any other person or corporation, or conveying any rights or permission to manufacture, use, or sell any patented invention that may in any way be related thereto.

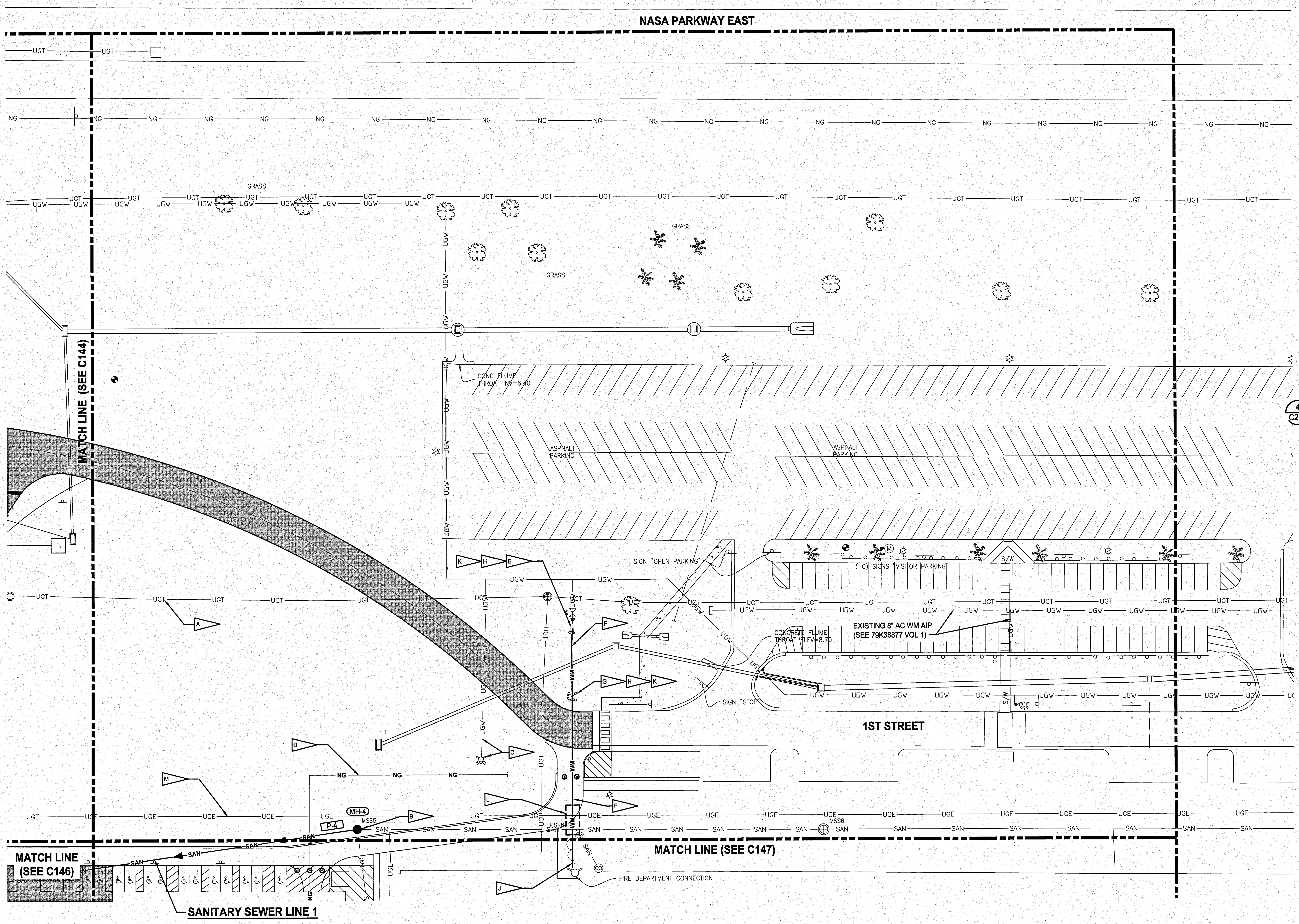

NOTES

- A — 4'x2' CONCRETE COMMUNICATIONS DUCT BANK SHALL NOT BE DISTURBED.
- B — SANITARY SEWER MANHOLE. CONTRACTOR SHALL NOT DIVERT FLOW INTO SANITARY SEWER LINE 1 UNTIL THAT NEW SYSTEM IS INSPECTED AND APPROVED BY THE GOVERNMENT. UNTIL THAT TIME, FLOW SHALL BE MAINTAINED FROM MSS5 TO MSS4 THROUGH NEW MH-1 TO MSS3. SEE DETAIL 1/C212
- C — WATER MAIN AND HYDRANT INSTALLED BY OTHER (DWG 79K38877)
- D — GAS LINE BY OTHERS
- E — ADJUST BFP ASSEMBLY TO GRADE. SEE DETAIL 1/C145
- F — 6" DI WATER MAIN
- G — RESET PIV TO GRADE
- H — (4) EXISTING BOLLARDS, REMOVED AND REINSTALLED AFTER BFP IS RECONSTRUCTED TO GRADE
- J — CONNECT TO EXISTING FDC LINE WITHIN 5' OF BUILDING WITH RESTRAINED MECHANICAL JOINT
- K — PAINT ABOVE GRADE PIPING RED
- L — UTILITY CONFLICT. SEE DETAIL 1/C211
- M — ELECTRICAL DIRECTIONAL DRILL BY OTHERS

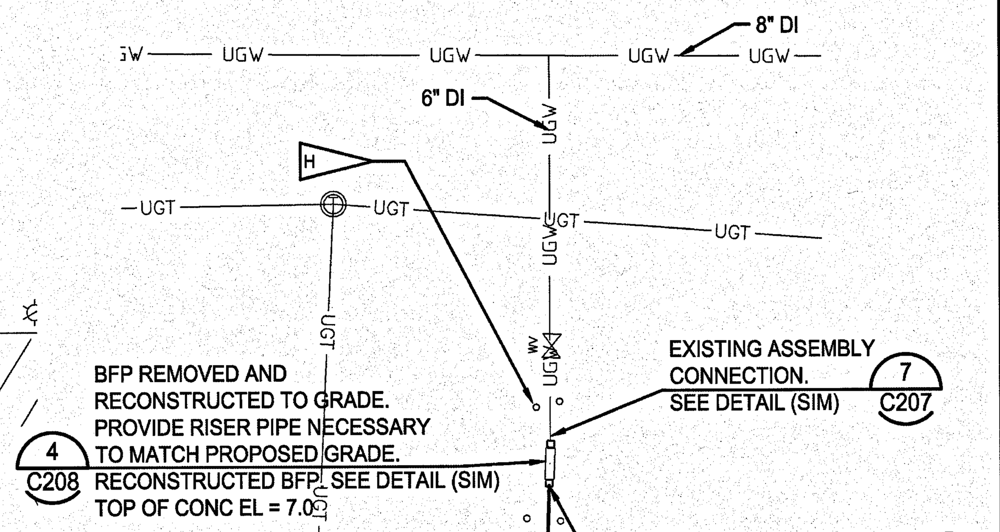

ADJUST BFP ASSEMBLY TO GRADE DETAIL 1/C145

NTS

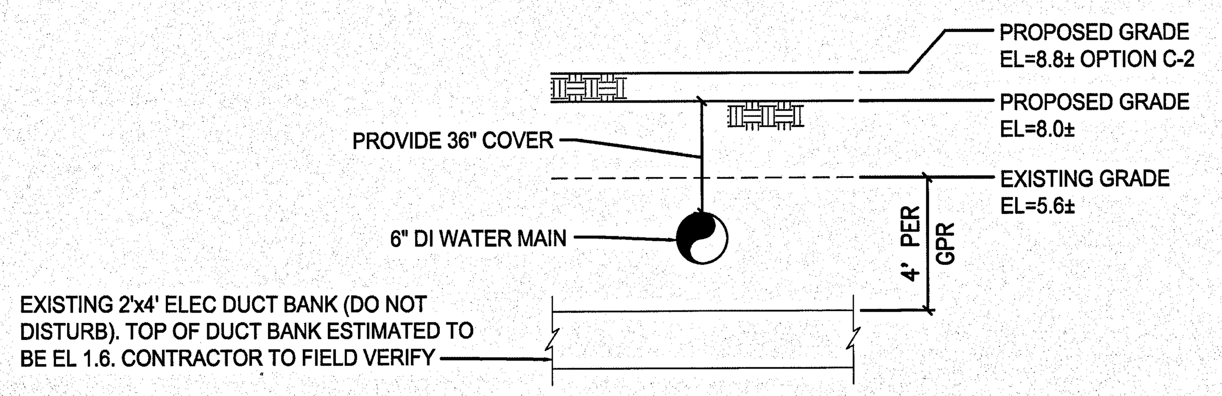

UTILITY CROSSING SECTION 1/C145

NTS

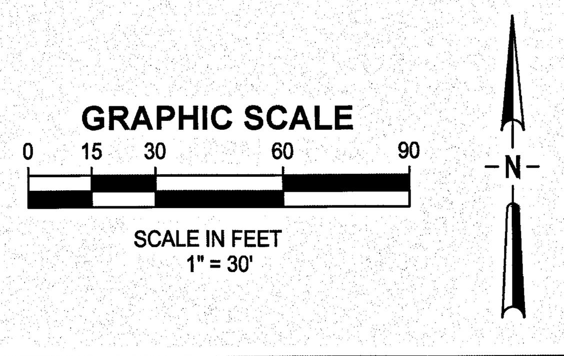

SYM	ZONE	REVISIONS	DATE	APPROVED

JONES EDMUNDS
730 NE WALDO ROAD, GAINESVILLE, FLORIDA 32641 / (352) 377-5821
3910 S WASHINGTON AVE, SUITE 210, TITUSVILLE, FLORIDA 32780 / (321) 269-2950

SIGNATURES	DATE
DRAWN P. UPSTILL	12.18.13
CHECKED M. O'BRIEN	12.18.13
SUBMITTED: ARCH/ENG OF RECORD W. NICKEL	12/18/13
ST of LICENSURE: FL LICENSE NO: 68638	
APPROVED R. KOLLER	12/18/13
K. MILLER	12/19/13

NATIONAL AERONAUTICS AND SPACE ADMINISTRATION
JOHN F. KENNEDY SPACE CENTER, NASA
KENNEDY SPACE CENTER, FLORIDA

KSC CENTRAL CAMPUS
REPLACEMENT HEADQUARTERS BUILDING
PHASE 1
VOL. 1 OF 4

UTILITIES PLAN

FILE NO. C-12070.00 | SIZE F | DWG. NO. 79K39622 VOL 1

PCN. NO. 98745.1a

C145

KSC FORM 1-11 (3/76)(C/G 3/94)

NOTICE: When Government drawings, specifications, or other data are used for any purpose other than in connection with a definitely related Government procurement operation, the United States Government thereby incurs no responsibility nor obligation whatsoever; and the fact that the Government may have formulated, furnished, or in any way supplied the said drawings, specifications or other data is not to be regarded by implication or otherwise as in any manner licensing the holder or any other person or corporation, or conveying any rights or permission to manufacture, use, or sell any patented invention that may in any way be related thereto.

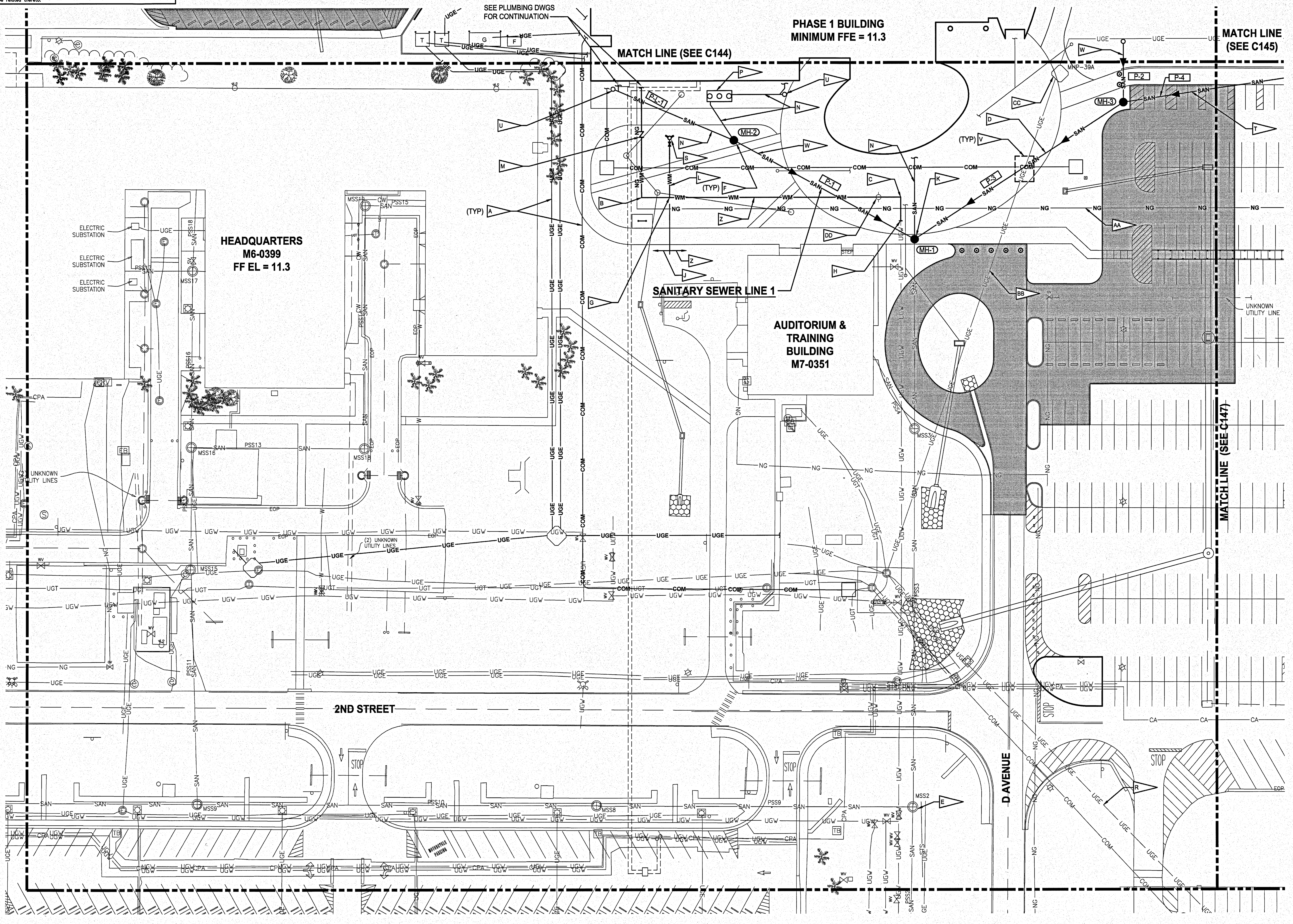

NOTES

- A: UNDERGROUND UTILITIES (SEE ELECTRICAL PLANS)
- B: 4" 90° DI BEND
- C: 8" 90° DI BEND
- D: 10" PVC GRAVITY SEWER
- E: EXISTING MANHOLE MSS-2 (N. INV. = -1.37, S. INV. = -1.47, W. INV. = -1.25)
- F: SANITARY SEWER MANHOLE. SEE DETAIL 1/C212
- G: 8"x8"x6" TEE WITH 8"x4" REDUCER, DI
- H: CONNECT TO PLUGGED 8" WATER GATE VALVE, INSTALLED BY OTHERS (DWG 79K38877)
- J: 4" DI WATER MAIN
- K: CONNECT PROPOSED MANHOLE (APPROX INV. = -0.10) TO EXISTING NORTH-SOUTH 10" GRAVITY SEWER. REMOVE UPSTREAM MANHOLE AND PIPING TO THE NORTH AND EAST AS INDICATED IN DEMOLITION PLANS. CONTRACTOR SHALL MAINTAIN FLOW IN EXISTING SANITARY SYSTEM AT ALL TIMES. A TEMPORARY PUMPED BY-PASS DIVERSION MAY BE USED BETWEEN MSS4 AND MSS3 AND MSS5, BUT SHALL BE LIMITED TO ONE 8-HOUR WORK DAY
- L: 6" WATER MAIN
- M: 4" REDUCED PRESSURE BACKFLOW PREVENTER. SEE DETAIL 4/C208
- N: 6" SANITARY SEWER LATERAL
- P: GREASE TRAP. SEE PLUMBING PLANS
- R: 5'x2' VERTICALLY STACKED ELECTRICAL DUCTBANK SHALL NOT BE DISTURBED
- S: RELOCATED FIRE HYDRANT. SEE DETAIL 1/C208
- T: ASPHALT PAVEMENT RESTORATION. SEE DETAIL 2/C207
- U: CLEANOUT. SEE DETAIL 2/C208
- V: UTILITY CONFLICT. SEE DETAIL 1/C211
- W: 8" PVC GRAVITY SEWER
- Z: 8" DI WATER MAIN
- AA: GAS LINE BY OTHERS
- BB: ELECTRICAL DIRECTIONAL DRILL BY OTHERS
- CC: ELECTRICAL MANHOLE BY OTHERS
- DD: FIRE HYDRANT ASSEMBLY FROM DRAWING PACKAGE 79K38877 TO BE RELOCATED

GRAPHIC SCALE
0 15 30 60 90
SCALE IN FEET
1" = 30'

N

SYM	ZONE	REVISIONS	DATE	APPROVED

JONES EDMUNDS
730 NE WALDO ROAD, GAINESVILLE, FLORIDA 32641 / (352) 377-5821
3910 S WASHINGTON AVE, SUITE 210, TITUSVILLE, FLORIDA 32780 / (321) 269-2950

SIGNATURES	DATE
DRAWN P. UPSTILL	12.18.13
CHECKED M. O'BRIEN	12.18.13
SUBMITTED: ARCH/ENG OF RECORD W. NICKEL	12/18/13
ST of LICENSURE: FL LICENSE NO: 68638	
APPROVED R. KOLLER	12/18/13
K. MILLER	12/19/13

NATIONAL AERONAUTICS AND SPACE ADMINISTRATION
JOHN F. KENNEDY SPACE CENTER, NASA
KENNEDY SPACE CENTER, FLORIDA

KSC CENTRAL CAMPUS
REPLACEMENT HEADQUARTERS BUILDING
PHASE 1
VOL. 1 OF 4

UTILITIES PLAN

FILE NO.	SIZE	DWG. NO.
C-12070.00	F	79K39622 VOL 1

PCN. NO. 98745.1a
SHEET 66

C146

KSC FORM 1-11 (3/76)(C/G 3/94)

NOTICE: When Government drawings, specifications, or other data are used for any purpose other than in connection with a definitely related Government procurement operation, the United States Government thereby incurs no responsibility nor obligation whatsoever; and the fact that the Government may have formulated, furnished, or in any way supplied the said drawings, specifications or other data is not to be regarded by implication or otherwise as in any manner licensing the holder or any other person or corporation, or conveying any rights or permission to manufacture, use, or sell any patented invention that may in any way be related thereto.

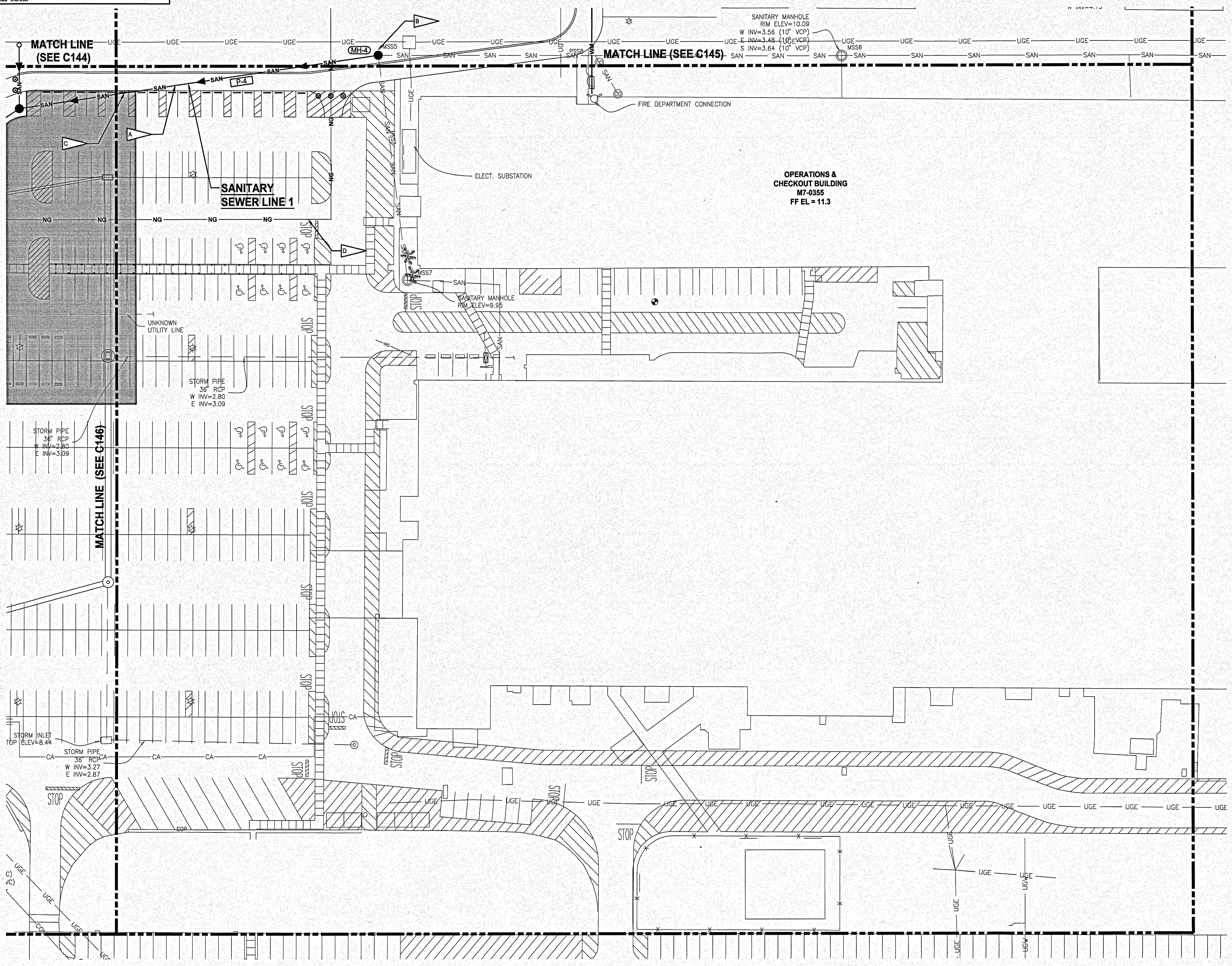

NOTES

- A: 10" PVC GRAVITY SEWER
- B: SANITARY SEWER MANHOLE. SEE DETAIL 1/C212
- C: ASPHALT PAVEMENT RESTORATION. SEE DETAIL 2/C207
- D: GAS LINE BY OTHERS

GRAPHIC SCALE

0 15 30 60 90

SCALE IN FEET
1" = 30'

SYM	ZONE	REVISIONS	DATE	APPROVED

JONES EDMUNDS
730 NE WALDO ROAD, GAINESVILLE, FLORIDA 32641 / (352) 377-5821
3910 S WASHINGTON AVE, SUITE 210, TITUSVILLE, FLORIDA 32780 / (321) 269-2950

SIGNATURES	DATE
DRAWN P. UPSTILL	12.18.13
CHECKED M. O'BRIEN	12.18.13
SUBMITTED: ARCH/ENG OF RECORD W. NICKEL	12/18/13
ST of LICENSURE: FL LICENSE NO: 68638	
APPROVED R. KOLLER	12/18/13
K. MILLER	12/19/13

NATIONAL AERONAUTICS AND SPACE ADMINISTRATION
JOHN F. KENNEDY SPACE CENTER, NASA
KENNEDY SPACE CENTER, FLORIDA

KSC CENTRAL CAMPUS
REPLACEMENT HEADQUARTERS BUILDING
PHASE 1
VOL. 1 OF 4

UTILITIES PLAN

FILE NO.	SIZE	DWG. NO.
C-12070.00	F	79K39622 VOL 1

PCN. NO. 98745.1a

C147

KSC FORM 1-11 (3/76)(C/G 3/94)

NOTICE: When Government drawings, specifications, or other data are used for any purpose other than in connection with a definitely related Government procurement operation, the United States Government thereby incurs no responsibility nor obligation whatsoever; and the fact that the Government may have formulated, furnished, or in any way supplied the said drawings, specifications or other data is not to be regarded by implication or otherwise as in any manner licensing the holder or any other person or corporation, or conveying any rights or permission to manufacture, use, or sell any patented invention that may in any way be related thereto.

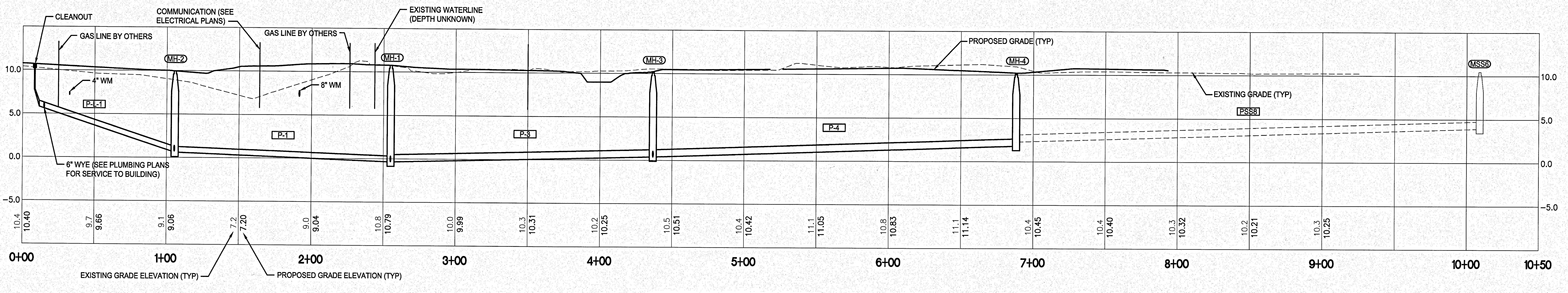

SANITARY SEWER LINE 1

1"=30' H
1"=5' V

EXISTING SANITARY SEWER MANHOLE TABLE

MSS-1:
SANITARY MANHOLE
RIM ELEV=6.09
N INV=(-)1.59 (10" PVC)
W INV=(-)0.22 (10" PVC)

MSS-2:
SANITARY MANHOLE
RIM ELEV=5.40
W INV=0.10 (8" PVC)
S INV=(-)1.53 (10" PVC)

MSS-3:
SANITARY MANHOLE
RIM ELEV=11.08
N INV=0.03 (12" VCP)
S INV=-0.24 (10" VCP)
NW INV=7.28

MSS-4:
SANITARY MANHOLE
RIM ELEV=7.22
S INV=0.00 (12" VCP)
E INV=(-)0.05 (12" VCP)

MSS-5:
SANITARY MANHOLE
RIM ELEV=10.95
W INV=2.07 (12" VCP)
E INV=2.24 (10" VCP)
S INV=3.96 (10" VCP)

MSS-6:
SANITARY MANHOLE
RIM ELEV=10.48
W INV=3.93 (10" VCP)

MSS-7:
SANITARY MANHOLE
RIM ELEV=9.95

MSS-8:
SANITARY MANHOLE
RIM ELEV=7.96
W INV=1.11 (6" PVC)
E INV=1.06 (8" PVC)

MSS-9:
SANITARY MANHOLE
RIM ELEV=8.38
N INV=2.37 (6" PVC)
W INV=2.69 (6" PVC)
E INV=2.28 (6" PVC)

MSS-10:
SANITARY MANHOLE
RIM ELEV=8.13
N INV=4.15 (8" PVC)
S INV=4.03 (8" PVC)
W INV=4.18 (8" DIP)

MSS-11:
SANITARY MANHOLE
RIM ELEV=8.31
N INV= (8" PVC)
S INV=4.31 (8" PVC)

MSS-12:
SANITARY MANHOLE
RIM ELEV=8.13
(INACCESSIBLE)

MSS-13:
SANITARY MANHOLE
RIM ELEV=10.52
S INV=5.22 (10" VCP)
W INV=6.51 (6" VCP)

MSS-14:
SANITARY MANHOLE, RIM ELEV=11.10
S INV=5.66 (12" PVC ABANDONED)

MSS-15:
SANITARY MANHOLE
RIM ELEV=9.70
N INV=2.45 (8" PVC)
S INV=3.24 (8" PVC)

MSS-16:
SANITARY MANHOLE
RIM ELEV=11.20
N INV=3.11 (8" PVC)
S INV=3.10 (8" PVC)
E INV=3.17 (8" PVC)

MSS-17:
SANITARY MANHOLE
RIM ELEV=
N INV=10.81 (ABANDONED)
S INV=3.59 (8" PVC)
W INV=3.60 (6" VCP)
E INV=3.60 (6" VCP)

MSS-18:
SANITARY MANHOLE
RIM ELEV=10.18
N INV=3.99 (8" PVC)
W INV=3.79 (8" PVC)

MSS-19:
SANITARY MANHOLE
RIM ELEV=10.46
E INV=4.87 (4" CIP)
S INV=4.56 (8" PVC)

MSS-20:
SANITARY MANHOLE
RIM ELEV=7.70
W INV=4.10 (10" VCP)
E INV=4.18 (FM 6" PVC)
NE INV=5.46 (FM 4" HDPE)

MSS-21:
SANITARY MANHOLE
RIM ELEV=7.74
W INV=3.03 (10" VCP)
E INV=3.14 (10" VCP)

MSS-22:
SANITARY MANHOLE
RIM ELEV=9.94
W INV=3.24 (10" VCP)
E INV=3.34 (10" VCP)

MSS-23:
SANITARY MANHOLE
RIM ELEV=9.82
W INV=3.02 (10" VCP)
E INV=3.12 (10" VCP)
S INV=3.47 (8" VCP)

MSS-24:
SANITARY MANHOLE
RIM ELEV=8.62
N INV=1.32 (12" PVC)
S INV=1.27 (12" PVC)
W INV=0.87 (8" PVC)
E INV=1.01 (10" VCP)

MSS-25:
SANITARY MANHOLE
RIM ELEV=7.30
W INV=5.58 (6" VCP)
NE INV=2.55 (6" PVC FM)
NE INV=4.26 (6" VCP)
S INV=2.34 (12" VCP)

MSS-26:
SANITARY MANHOLE
RIM ELEV=8.08
S INV=3.89 (6" PVC)
W INV=3.99 (6" PVC)

MSS-27:
SANITARY MANHOLE
RIM ELEV=7.25
W INV=4.58 (6" PVC)
SE INV=4.69 (6" PVC)
SW INV=4.62 (6" PVC)

EXISTING SANITARY SEWER STRUCTURE TABLE

PIPE No	MANHOLE	LENGTH (FT)	DIAMETER (IN)	MATERIAL
PSS1	MSS1	50	10	PVC
PSS2	MSS1, MSS2	127	10	PVC
PSS3	MSS2, MSS3	272	UK	UK
PSS4	MSS3	60	UK	UK
PSS5	MSS3, MSS4	273	12	VCP
PSS6	MSS4, MSS5	400	12	VCP
PSS7	MSS5, MSS7	157	UK	UK
PSS8	MSS5, MSS6	320	10	VCP
PSS9	MSS2, MSS8	278	8	PVC
PSS10	MSS8, MSS9	290	6	PVC
PSS11	MSS9, MSS15	170	8	PVC
PSS12	MSS15, MSS16	89	8	PVC
PSS13	MSS16, MSS18	126	8	PVC
PSS14	MSS18, MSS19	177	8	PVC
PSS15	MSS19	44	4	CIP
PSS16	MSS16, MSS17	129	8	PVC
PSS17	STORM MH.	64	UK	UK
PSS18	MSS17	60	UK	PVC
PSS19	MSS9, MSS9	325	6	PVC
PSS20	MSS9, MSS10	92	8	PVC
PSS21	MSS11, MSS4	285	8	PVC
PSS22	MSS12, MSS10	165	8	DIP
PSS23	MSS12, MSS13	340	10	VCP
PSS24	MSS13	42	6	VCP
PSS25	MSS20	1225	6	PVC
PSS26	MSS20	280	4	HDPE
PSS27	MSS	107	8	PVC
PSS28	MSS21, MSS20	400	10	VCP
PSS29	MSS22, MSS21	400	10	VCP
PSS30	MSS23, MSS22	72	10	VCP
PSS31	MSS23	330	10	VCP
PSS32	MSS24, MSS23	338	10	VCP
PSS33	MSS24	90	8	PVC
PSS34	MSS25, MSS24	185	12	VCP
PSS35	MSS26, MSS25	156	6	PVC
PSS36	MSS25		6	VCP
PSS37				
PSS38	MSS27	105	6	PVC
PSS39	MSS	108	UK	UK
PSS40	SAN LIFT ST.	310	10	PVC

SANITARY SEWER MANHOLE STRUCTURE TABLE

MANHOLE No	STRUCTURE TYPE	RIM EL	PIPE IE
MH-1	4' DIA	10.85	-0.10
MH-2	4' DIA	9.50	0.50
MH-3	4' DIA	10.50	0.75
MH-4	4' DIA	10.10	1.80

SANITARY SEWER PIPE TABLE

PIPE No	FROM MANHOLE	TO MANHOLE	LENGTH (FT)	DIAMETER (IN)	MATERIAL
P-1	MH-2	MH-1	149	8	PVC
P-2	CO	MH-3	45	8	PVC
P-3	MH-3	MH-1	182	10	PVC
P-4	MH-4	MH-3	252	10	PVC

GRAPHIC SCALE
0 15 30 60 90
SCALE IN FEET
1" = 30' H

GRAPHIC SCALE
0 2.5 5 10 20
SCALE IN FEET
1" = 5' V

SYM	ZONE	REVISIONS	DATE	APPROVED

JONES EDMUNDS
730 NE WALDO ROAD, GAINESVILLE, FLORIDA 32641 / (352) 377-5821
3910 S WASHINGTON AVE, SUITE 210, TITUSVILLE, FLORIDA 32780 / (321) 269-2950

SIGNATURES	DATE
DRAWN P. UPSTILL	12.18.13
CHECKED M. O'BRIEN	12.18.13
SUBMITTED: ARCH/ENG OF RECORD W. NICKEL	12/18/13
ST of LICENSURE: FL LICENSE NO. 68638	
APPROVED R. KOLLER	12/18/13
K. MILLER	12/19/13

C148

NATIONAL AERONAUTICS AND SPACE ADMINISTRATION
JOHN F. KENNEDY SPACE CENTER, NASA
KENNEDY SPACE CENTER, FLORIDA

KSC CENTRAL CAMPUS
REPLACEMENT HEADQUARTERS BUILDING
PHASE 1
VOL. 1 OF 4

UTILITY PROFILES AND TABLES

FILE NO. C-12070.00 | SIZE F | DWG. NO. 79K39622 VOL 1
PCN. NO. 98745.1a | SHEET 68

KSC FORM 1-11 (3/76)(C/G 3/94)

NOTICE: When Government drawings, specifications, or other data are used for any purpose other than in connection with a definitely related Government procurement operation, the United States Government thereby incurs no responsibility nor obligation whatsoever; and the fact that the Government may have formulated, furnished, or in any way supplied the said drawings, specifications or other data is not to be regarded by implication or otherwise as in any manner licensing the holder or any other person or corporation, or conveying any rights or permission to manufacture, use, or sell any patented invention that may in any way be related thereto.

CONTRACTOR REQUIREMENTS

OWNERS REQUIREMENTS

SITE DESCRIPTION

PROJECT NAME AND LOCATION:

CENTRAL CAMPUS - REPLACEMENT HEADQUARTERS PHASE I
INDUSTRIAL AREA, KENNEDY SPACE CENTER, FLORIDA (BREVARD COUNTY)

OWNER AND ADDRESS:

NASA
KENNEDY SPACE CENTER, FLORIDA (BREVARD COUNTY)

DESCRIPTION:

THIS PROJECT WILL CONSIST OF:

THE PARTIAL DEMOLITION OF 1ST STREET AND D AVENUE, MODIFICATIONS AND EXTENSIONS OF SANITARY SEWERS, EXTENSIONS OF WATERMAINS, AND REDIRECTION OF STORMWATER CONVEYANCE SYSTEMS TO THE CONSTRUCTION OF A NEW HEADQUARTERS BUILDING. PROJECT ALSO INCLUDES NEW PARKING FACILITIES AND MODIFICATIONS TO EXISTING PARKING AREAS. ALL STORMWATER IS BEING DIRECTED TO THE REGIONAL STORMWATER TREATMENT BASIN LOCATED SOUTH OF THE INDUSTRIAL AREA.

SOIL DISTURBING ACTIVITIES WILL INCLUDE:

SITE WORK FOR NEW HEADQUARTERS BUILDING, PARKING AREAS AND UTILITY WORK.

SOILS:

SEE SOILS REPORT FOR SOILS DATA.

SITE MAPS:

SEE ATTACHED GRADING PLAN FOR PRE & POST DEVELOPMENT GRADES, AREAS OF SOILS, DISTURBANCE, LOCATION OF SURFACE WATERS, WETLANDS, PROTECTED AREAS, MAJOR STRUCTURAL AND NONSTRUCTURAL CONTROLS AND STORM WATER DISCHARGE POINTS.

SEE ATTACHED EROSION & TURBIDITY CONTROL PLAN FOR LOCATION OF TEMPORARY STABILIZATION PRACTICES, AND TURBIDITY BARRIERS.

SEE GENERAL NOTES AND SPECIFICATIONS FOR REQUIREMENTS FOR TEMPORARY AND PERMANENT STABILIZATION.

SITE AREA:

1. TOTAL AREA OF SITE - 15.56 ACRES
2. TOTAL AREA TO BE DISTURBED - 15.56 ACRES

NAME OF RECEIVING WATERS:

BANANA RIVER LAGOON

CONTROLS

THIS PLAN UTILIZES BEST MANAGEMENT PRACTICES TO CONTROL EROSION AND TURBIDITY CAUSED BY STORM WATER RUN OFF, AN EROSION & TURBIDITY PLAN HAS BEEN PREPARED TO INSTRUCT THE CONTRACTOR ON PLACEMENT OF THESE CONTROLS, IT IS THE CONTRACTORS RESPONSIBILITY TO INSTALL AND MAINTAIN THE CONTROLS AS PER PLAN AS WELL AS ENSURING THE PLAN IS PROVIDING THE PROPER PROTECTION AS REQUIRED BY FEDERAL, STATE, AND LOCAL LAWS. REFER TO 'CONTRACTORS REQUIREMENTS' FOR A VERBAL DESCRIPTION OF THE CONTROLS THAT MAY BE IMPLEMENTED.

STORM WATER MANAGEMENT

REGRADED AREAS SHALL BE STABILIZED IMMEDIATELY AFTER GRADING IS COMPLETE. THE SITE WILL DISCHARGE TO SWALES, DITCHES, AND PIPES THAT ULTIMATELY DISCHARGE TO THE REGIONAL STORMWATER TREATMENT BASIN.

REFER TO 'CONTRACTORS REQUIREMENTS' FOR THE TIMING OF CONTROL/MEASURES.

CERTIFICATION OF COMPLIANCE WITH FEDERAL, STATE, AND LOCAL REGULATIONS

IN AN EFFORT TO ENSURE COMPLIANCE WITH FEDERAL, STATE, AND LOCAL LAWS REGARDING EROSION AND TURBIDITY CONTROLS, THE FOLLOWING PERMITS HAVE BEEN OBTAINED.

D.E.P. DREDGE/FILL PERMIT # N/A
A.C.O.E. DREDGE/FILL PERMIT # N/A
S.J.R.W.M.D. M.S.S.W. PERMIT # 4-009-16585-9

POLLUTION PREVENTION PLAN CERTIFICATION

I CERTIFY UNDER PENALTY OF LAW THAT THIS DOCUMENT AND ALL ATTACHMENTS WERE PREPARED UNDER MY DIRECTION OR SUPERVISION IN ACCORDANCE WITH A SYSTEM DESIGNED TO ASSURE THAT QUALIFIED PERSONNEL PROPERLY GATHERED AND EVALUATED THE INFORMATION SUBMITTED. BASED ON MY INQUIRY OF THE PERSON OR PERSONS WHO MANAGE THE SYSTEM, OR THOSE PERSONS DIRECTLY RESPONSIBLE FOR GATHERING THE INFORMATION, THE INFORMATION SUBMITTED IS, TO THE BEST OF MY KNOWLEDGE AND BELIEF, TRUE, ACCURATE, AND COMPLETE. I AM AWARE THAT THERE ARE SIGNIFICANT PENALTIES FOR SUBMITTING FALSE INFORMATION, INCLUDING THE POSSIBILITY OF FINE AND IMPRISONMENT FOR KNOWING VIOLATIONS.

SIGNED: ____________

TITLE: ____________

DATE: ____________

CONTRACTOR REQUIREMENTS

GENERAL

THE CONTRACTOR SHALL AT A MINIMUM IMPLEMENT THE CONTRACTOR'S REQUIREMENTS OUTLINED BELOW AND THOSE MEASURES SHOWN ON THE EROSION AND TURBIDITY CONTROL PLAN. IN ADDITION THE CONTRACTOR SHALL UNDERTAKE ADDITIONAL MEASURES REQUIRED TO BE IN COMPLIANCE WITH APPLICABLE PERMIT CONDITIONS AND STATE WATER QUALITY STANDARDS DEPENDING ON THE NATURE OF MATERIALS AND METHODS OF CONSTRUCTION.

SEQUENCE OF MAJOR ACTIVITIES

THE ORDER OF ACTIVITIES WILL BE AS FOLLOWS.

1. COMPLETE AND SUBMIT NOTICE OF INTENT (NOI) TO FDEP (BY OWNER).
2. INSTALL STABILIZED CONSTRUCTION ENTRANCES.
3. INSTALL SILT FENCES, TURBIDITY BARRIERS, AND OTHER EROSION CONTROL DEVICES.
4. CONSTRUCT SEDIMENTATION BASIN.(IF APPLICABLE)
5. REMOVE UNSUITABLE SOILS FROM BENEATH BUILDING FOOTPRINT AND DRY RETENTION AREAS (IF APPLICABLE).
6. STOCK PILE TOP SOIL IF REQUIRED.
7. PERFORM PRELIMINARY GRADING ON SITE AS REQUIRED.
9. STABILIZE CLEARED AREAS AND STOCKPILES AS SOON AS PRACTICABLE.
10. INSTALL UTILITIES, STORMSEWER, AND FOOTING/SLAB.
11. APPLY LIMEROCK BASE TO PARKING AND DRIVE AREAS.
12. COMPLETE GRADING AND INSTALL PERMANENT SEEDING/SOD.
13. REMOVE ACCUMULATED SEDIMENT FROM BASINS AND DITCHES.
14. WHEN ALL CONSTRUCTION ACTIVITY IS COMPLETE AND THE SITE IS STABILIZED, REMOVE ANY TEMPORARY DIVERSION SWALES/DIKES AND RESEED/SOD AS REQUIRED.
15. COMPLETE AND SUBMIT NOTICE OF TERMINATION (NOT) TO FDEP (BY OWNER).

TIMING OF CONTROLS/MEASURES

AS INDICATED IN THE SEQUENCE OF MAJOR ACTIVITIES, THE EROSION CONTROL DEVICES, STABILIZED CONSTRUCTION ENTRANCES AND SEDIMENT BASINS WILL BE CONSTRUCTED PRIOR TO DEMOLITION OR GRADING OF ANY OTHER PORTIONS OF THE SITE. STABILIZATION MEASURES SHALL BE APPLIED WITHIN 14 DAYS IN PORTIONS OF THE SITE WHERE CONSTRUCTION ACTIVITIES HAVE TEMPORARILY OR PERMANENTLY CEASED. ONCE CONSTRUCTION ACTIVITY CEASES PERMANENTLY IN ACCORDANCE WITH THE PLANS. AFTER THE ENTIRE SITE IS STABILIZED, THE ACCUMULATED SEDIMENT WILL BE REMOVED FROM THE SEDIMENT TRAPS, BASINS, AND THE EARTH DIKE/SWALES WILL BE REGRADED/REMOVED AND STABILIZED IN ACCORDANCE WITH THE SEDIMENT AND EROSION CONTROL PLAN.

CONTROLS

IT IS THE CONTRACTORS RESPONSIBILITY TO IMPLEMENT THE EROSION AND TURBIDITY CONTROLS AS SHOWN ON THE SEDIMENT AND EROSION CONTROL PLAN. IT IS ALSO THE CONTRACTORS RESPONSIBILITY TO ENSURE THESE CONTROLS ARE PROPERLY INSTALLED, MAINTAINED AND FUNCTIONING PROPERLY TO PREVENT TURBID OR POLLUTED WATER FROM LEAVING THE PROJECT SITE. THE CONTRACTOR WILL ADJUST THE EROSION CONTROL PLAN AND/OR ADD ADDITIONAL CONTROL MEASURES, AS REQUIRED, TO ENSURE THE SITE MEETS ALL FEDERAL STATE AND LOCAL EROSION AND SEDIMENT CONTROL PLAN AND AS REQUIRED TO MEET THE SEDIMENT AND TURBIDITY REQUIREMENTS IMPOSED ON THE PROJECT SITE BY THE REGULATORY AGENCIES.

EROSION AND SEDIMENT CONTROLS
STABILIZATION PRACTICES

1. FILTER FABRIC BARRIER: FILTER FABRIC BARRIERS CAN BE USED BELOW DISTURBED AREAS SUBJECT TO SHEET AND RILL EROSION WITH THE FOLLOWING LIMITATIONS:
   A. WHERE THE MAXIMUM SLOPE BEHIND THE BARRIER IS 33 PERCENT.
   B. IN MINOR SWALES OR DITCH LINES WHERE THE MAXIMUM CONTRIBUTING DRAINAGE AREA IS NO GREATER THAN 2.0 ACRES.
2. BRUSH BARRIER WITH FILTER FABRIC: BRUSH BARRIER MAY BE USED BELOW DISTURBED AREAS SUBJECT TO SHEET AND RILL EROSION WHERE ENOUGH RESIDUE MATERIAL IS AVAILABLE ON SITE.
3. LEVEL SPREADER: A LEVEL SPREADER MAY BE USED WHERE SEDIMENT-FREE STORM RUNOFF IS INTERCEPTED AND DIVERTED AWAY FROM THE GRADED AREAS ONTO UNDISTURBED STABILIZED AREAS. THIS PRACTICE APPLIES ONLY IN THOSE SITUATIONS WHERE THE SPREADER CAN BE CONSTRUCTED ON UNDISTURBED SOIL AND THE AREA BELOW THE LEVEL UP IS STABILIZED. THE WATER SHOULD NOT BE ALLOWED TO RECONCENTRATE AFTER RELEASE.
4. STOCKPILING MATERIAL: NO EXCAVATED MATERIAL SHALL BE STOCKPILED IN SUCH A MANNER AS TO DIRECT RUNOFF DIRECTLY OFF THE PROJECT SITE INTO ANY ADJACENT WATER BODY OR STORM WATER COLLECTION FACILITY.
5. EXPOSED AREA LIMITATION: THE SURFACE AREA OF OPEN, ERODIBLE SOIL EXPOSED BY CLEARING GRUBBING OPERATIONS OR EXCAVATION AND FILLING OPERATIONS SHALL NOT EXCEED 2.0 ACRES. THIS REQUIREMENT MAY BE WAIVED FOR LARGE PROJECTS WITH AN EROSION CONTROL PLAN WHICH DEMONSTRATES THAT OPENING OF ADDITIONAL AREA WILL NOT SIGNIFICANTLY AFFECT OFF-SITE DEPOSIT OF SEDIMENTS.
6. INLET PROTECTION: INLETS AND CATCH BASINS WITH DISCHARGE DIRECTLY OFF-SITE SHALL BE PROTECTED FROM SEDIMENT-LADEN STORM RUNOFF UNTIL THE COMPLETION OF ALL CONSTRUCTION OPERATIONS THAT MAY CONTRIBUTE SEDIMENT TO THE INLET.
7. TEMPORARY SEEDING: AREAS OPENED BY CONSTRUCTION OPERATIONS AND THAT ARE NOT ANTICIPATED TO BE RE-EXCAVATED OR DRESSED AND RECEIVE FINAL GRASSING TREATMENT WITHIN 21 DAYS SHALL BE SEEDED WITH A QUICK GROWING GRASS. SPECIES WHICH WILL PROVIDE AN EARLY COVER DURING THE SEASON IN WHICH IT IS PLANTED AND WILL NOT LATER COMPLETE WITH THE PERMANENT GRASSING.
8. TEMPORARY SEEDING AND MULCHING: SLOPES STEEPER THAN 6:1 THAT FALL WITHIN THE CATEGORY ESTABLISHED IN PARAGRAPH 8 ABOVE SHALL ADDITIONALLY RECEIVE MULCHING OF APPROXIMATELY 6" LOOSE MEASURE OF MULCH MATERIAL CUT INTO THE SOIL OF THE SEEDED AREA ADEQUATE TO PREVENT MOVEMENT OF SEED AND MULCH OR HYDROMULCHED.
9. TEMPORARY GRASSING: THE SEEDED OR SEEDED AND MULCHED AREA(S) SHALL BE ROLLED AND WATERED OR HYDROMULCHED OR OTHER SUITABLE METHODS IF REQUIRED TO ASSURE OPTIMUM GROWING CONDITIONS FOR THE ESTABLISHMENT OF A GOOD GRASS COVER.
10. TEMPORARY REGRASSING: IF, AFTER 14 DAYS FROM SEEDING, THE TEMPORARY GRASSED AREAS HAVE NOT ATTACHED A MINIMUM OF 75 PERCENT GOOD GRASS COVER, THE AREA WILL BE REWORKED AND ADDITIONAL SEED APPLIED SUFFICIENT TO ESTABLISH THE DESIRED VEGETATIVE COVER.
11. MAINTENANCE: ALL FEATURES OF THE PROJECT DESIGNED AND CONSTRUCTED TO PREVENT EROSION AND SEDIMENT SHALL BE MAINTAINED DURING THE LIFE OF THE CONSTRUCTION SO AS TO FUNCTION AS THEY WERE ORIGINALLY DESIGNED AND CONSTRUCTED.
12. PERMANENT EROSION CONTROL: THE EROSION CONTROL FACILITIES OF THE PROJECT SHOULD BE DESIGNED TO MINIMIZE THE IMPACT ON THE OFFSITE FACILITIES.
13. PERMANENT SEEDING: ALL AREAS WHICH HAVE BEEN DISTURBED BY CONSTRUCTION WILL, AS A MINIMUM, BE SEEDED. THE SEEDING MIX MUST PROVIDE BOTH LONG-TERM VEGETATION AND RAPID GROWTH SEASONAL VEGETATION. SLOPES STEEPER THAN 4:1 SHALL BE SODDED.

STRUCTURAL PRACTICES

1. TEMPORARY DIVERSION DIKE: TEMPORARY DIVERSION DIKES MAY BE USED TO DIVERT RUNOFF THROUGH A SEDIMENT-TRAPPING FACILITY.
2. TEMPORARY SEDIMENT TRAP: A SEDIMENT TRAP IS USUALLY INSTALLED IN AN DRAINAGEWAY AT A STORM DRAIN INLET OR AT OTHER POINTS OF DISCHARGE FROM A DISTURBED AREA WITH THE FOLLOWING LIMITATIONS:
   A. THE SEDIMENT TRAP MAY BE CONSTRUCTED EITHER INDEPENDENTLY OR IN CONJUNCTION WITH A TEMPORARY DIVERSION DIKE.
3. OUTLET PROTECTION: APPLICABLE TO THE OUTLETS OF ALL PIPES AND PAVED CHANNEL SECTIONS WHERE THE VELOCITY OF FLOW AT DESIGN CAPACITY OF THE OUTLET WILL EXCEED THE PERMISSIBLE VELOCITY OF THE RECEIVING CHANNEL OR AREA.
4. SEDIMENT BASIN: WILL BE CONSTRUCTED AT THE COMMON DRAINAGE LOCATIONS THAT SERVE AN AREA WITH 10 OR MORE DISTURBED ACRES AT ONE TIME, THE PROPOSED STORM WATER PONDS (OR TEMPORARY PONDS) WILL BE CONSTRUCTED FOR USE AS SEDIMENT BASINS. THESE SEDIMENT BASINS MUST PROVIDE A MINIMUM OF 3530 FT3 OF STORAGE PER 1 ACRE DRAINED UNTIL FINAL STABILIZATION OF THE SITE. THE 3530 FT3 OF STORAGE AREA PER 1 ACRE DRAINED DOES NOT APPLY TO FLOWS FROM OFFSITE AREAS AND FLOWS FROM ONSITE AREAS THAT ARE EITHER UNDISTURBED OR HAVE UNDERGONE FINAL STABILIZATION WHERE SUCH FLOWS ARE DIVERTED AROUND BOTH THE DISTURBED AREA AND THE SEDIMENT BASIN. ANY TEMPORARY SEDIMENT BASINS CONSTRUCTED MUST BE BACKFILLED AND COMPACTED IN ACCORDANCE WITH THE SPECIFICATIONS FOR STRUCTURAL FILL. ALL SEDIMENT COLLECTED IN PERMANENT OR TEMPORARY SEDIMENT TRAPS MUST BE REMOVED UPON FINAL STABILIZATION AND RESTORED TO DESIGN STORAGE CAPACITY BEFORE FINAL BUY OFF OF PROJECT.

OTHER CONTROLS

WASTE DISPOSAL

WASTE MATERIALS

ALL WASTE MATERIALS EXCEPT LAND CLEARING DEBRIS SHALL BE COLLECTED AND STORED IN A METAL DUMPSTER. THE DUMPSTER WILL MEET ALL LOCAL AND STATE SOLID WASTE MANAGEMENT REGULATIONS. THE DUMPSTER WILL BE EMPTIED AS NEEDED AND THE TRASH WILL BE HAULED TO A STATE APPROVED LANDFILL ALL PERSONNEL WILL BE INSTRUCTED REGARDING THE CORRECT PROCEDURE FOR WASTE DISPOSAL. NOTICES STATING THESE PRACTICES WILL BE POSTED AT THE CONSTRUCTION SITE BY THE CONSTRUCTION SUPERINTENDENT, THE INDIVIDUAL WHO MANAGES THE DAY-TO-DAY SITE OPERATIONS, WILL BE RESPONSIBLE FOR SEEING THAT THESE PRACTICES ARE FOLLOWED. LAND CLEARING DEBRIS CAN BE TAKEN TO THE KSC LANDFILL.

HAZARDOUS WASTE

ALL HAZARDOUS WASTE MATERIALS WILL BE DISPOSED OF IN THE MANNER SPECIFIED BY LOCAL OR STATE REGULATION OR BY THE MANUFACTURER. SITE PERSONNEL WILL BE INSTRUCTED IN THESE PRACTICES AND THE SITE SUPERINTENDENT, THE INDIVIDUAL WHO MANAGES DAY-TO-DAY SITE OPERATIONS, WILL BE RESPONSIBLE FOR SEEING THAT THESE PRACTICES ARE FOLLOWED.

SANITARY WASTE

ALL SANITARY WASTE WILL BE COLLECTED FROM THE PORTABLE UNITS AS NEEDED TO PREVENT POSSIBLE SPILLAGE. THE WASTE WILL BE COLLECTED AND DISPOSED OF IN ACCORDANCE WITH STATE AND LOCAL WASTE DISPOSAL REGULATIONS FOR SANITARY SEWER OR SEPTIC SYSTEMS.

OFFSITE VEHICLE TRACKING

STABILIZED CONSTRUCTION ENTRANCES WILL BE PROVIDED TO HELP REDUCE VEHICLE TRACKING OF SEDIMENTS. THE PAVED AREA ADJACENT TO THE SITE ENTRANCE WILL BE SWEPT DAILY TO REMOVE ANY EXCESS MUD, DIRT OR ROCK TRACKED FROM THE SITE. DUMP TRUCKS HAULING MATERIAL FROM THE CONSTRUCTION SITE WILL BE COVERED WITH A TARP.

INVENTORY FOR POLLUTION PREVENTION PLAN

THE MATERIAL OR SUBSTANCES LISTED BELOW ARE EXPECTED TO BE PRESENT ONSITE DURING CONSTRUCTION:

CONCRETE	FERTILIZERS	WOOD
DETERGENTS	PETROLEUM BASED PRODUCTS	MASONRY BLOCKS
	CLEANING SOLVENTS	ROOFING MATERIALS
	PAINTS	METAL STUDS

SPILL PREVENTION

MATERIAL MANAGEMENT PRACTICES

THE FOLLOWING ARE THE MATERIAL MANAGEMENT PRACTICES THAT WILL BE USED TO REDUCE THE RISK OF SPILLS OR OTHER ACCIDENTAL EXPOSURE OF MATERIALS AND SUBSTANCES TO STORM WATER RUNOFF.

GOOD HOUSEKEEPING

THE FOLLOWING GOOD HOUSEKEEPING PRACTICES WILL BE FOLLOWED ONSITE DURING THE CONSTRUCTION PROJECT.

AN EFFORT WILL BE MADE TO STORE ONLY ENOUGH PRODUCT REQUIRED TO DO THE JOB.

ALL MATERIALS STORED ONSITE WILL BE STORED IN A NEAT, ORDERLY MANNER IN THEIR APPROPRIATE CONTAINERS AND, IF POSSIBLE, UNDER A ROOF OR OTHER ENCLOSURE.

PRODUCTS WILL BE KEPT IN THEIR ORIGINAL CONTAINERS WITH THE ORIGINAL MANUFACTURER'S LABEL.

SUBSTANCES WILL NOT BE MIXED WITH ONE ANOTHER UNLESS RECOMMENDED BY THE MANUFACTURER.

WHENEVER POSSIBLE, ALL OF A PRODUCT WILL BE USED UP BEFORE DISPOSING OF THE CONTAINER.

MANUFACTURER'S RECOMMENDATIONS FOR PROPER USE AND DISPOSAL WILL BE FOLLOWED.

THE SITE SUPERINTENDENT WILL INSPECT DAILY TO ENSURE MATERIALS ONSITE RECEIVE PROPER USE AND DISPOSAL.

HAZARDOUS PRODUCTS

THESE PRACTICES ARE USED TO REDUCE THE RISKS ASSOCIATED WITH HAZARDOUS MATERIALS.

PRODUCTS WILL BE KEPT IN ORIGINAL CONTAINERS UNLESS THEY ARE NOT RESEALABLE.

ORIGINAL LABELS AND MATERIAL SAFETY DATA WILL BE RETAINED; THEY CONTAIN IMPORTANT PRODUCT INFORMATION.

IF SURPLUS PRODUCT MUST BE DISPOSED OF MANUFACTURER'S OR LOCAL AND STATE RECOMMENDED METHODS FOR PROPER DISPOSAL WILL BE FOLLOWED.

PRODUCT SPECIFIC PRACTICES

THE FOLLOWING PRODUCT SPECIFIC PRACTICES WILL BE FOLLOWED ONSITE:

PETROLEUM PRODUCTS

ALL ONSITE VEHICLES WILL BE MONITORED FOR LEAKS AND RECEIVE REGULAR PREVENTATIVE MAINTENANCE TO REDUCE THE CHANCE OF LEAKAGE. PETROLEUM PRODUCTS WILL BE STORED IN TIGHTLY SEALED CONTAINERS WHICH ARE CLEARLY LABELED. ANY ASPHALT SUBSTANCES USED ONSITE WILL BE APPLIED ACCORDING TO THE MANUFACTURER'S RECOMMENDATIONS.

FERTILIZERS

FERTILIZERS USED WILL BE APPLIED ONLY IN THE MINIMUM AMOUNTS RECOMMENDED BY THE MANUFACTURER. ONCE APPLIED, FERTILIZER WILL BE WORKED INTO THE SOIL TO LIMIT EXPOSURE TO STORM WATER. STORAGE WILL BE IN A COVERED AREA. THE CONTENTS OF ANY PARTIALLY USED BAGS OF FERTILIZER WILL BE TRANSFERRED TO A SEALABLE PLASTIC BIN TO AVOID SPILLS.

PAINTS

ALL CONTAINERS WILL BE TIGHTLY SEALED AND STORED WHEN NOT REQUIRED FOR USE. EXCESS PAINT WILL NOT BE DISCHARGED TO THE STORM SEWER SYSTEM BUT WILL BE PROPERLY DISPOSED OF ACCORDING TO MANUFACTURERS' INSTRUCTIONS OR STATE AND LOCAL REGULATIONS.

CONCRETE TRUCKS

CONCRETE TRUCKS WILL NOT BE ALLOWED TO WASH OUT OR DISCHARGE SURPLUS CONCRETE OR DRUM WASH WATER TO DITCHES, PONDS OR OTHER WATERWAYS. WASHWATER SHALL BE COLLECTED IN A TEMPORARY SETTLING POND.

SPILL CONTROL PRACTICES

IN ADDITION TO THE GOOD HOUSEKEEPING AND MATERIAL MANAGEMENT PRACTICES DISCUSSED IN THE PREVIOUS SECTIONS OF THIS PLAN, THE FOLLOWING PRACTICES WILL BE FOLLOWED FOR SPILL PREVENTION AND CLEANUP:

MANUFACTURERS' RECOMMENDED METHODS FOR SPILL CLEANUP WILL BE CLEARLY POSTED ON SITE AND SITE PERSONNEL WILL BE MADE AWARE OF THE METHODS AND POSTED LOCATION.

MATERIALS AND EQUIPMENT NECESSARY FOR SPILL CLEANUP WILL BE KEPT IN THE MATERIAL STORAGE AREA ONSITE. EQUIPMENT AND MATERIALS WILL INCLUDE, BUT NOT BE LIMITED TO BROOMS, DUST PANS, MOPS, RAGS, GLOVES, GOGGLES, LIQUID ABSORBENT (i.e. KITTY LITTER OR EQUAL), SAND, SAWDUST, AND PLASTIC AND METAL TRASH CONTAINERS SPECIFICALLY FOR THIS PURPOSE.

ALL SPILLS WILL BE CLEANED UP IMMEDIATELY AFTER DISCOVERY, BY THE KENNEDY SPACE CENTER SPILL RECOVERY TEAM.

THE SPILL AREA WILL BE KEPT WELL VENTILATED AND PERSONNEL WILL WEAR APPROPRIATE PROTECTIVE CLOTHING TO PREVENT INJURY FROM CONTACT WITH A HAZARDOUS SUBSTANCE.

SPILL OF TOXIC OR HAZARDOUS MATERIAL WILL BE REPORTED IMMEDIATELY TO THE CONTRACTING OFFICER.

THE SPILL PREVENTION PLAN WILL BE ADJUSTED TO INCLUDE MEASURES TO PREVENT THIS TYPE OF SPILL FROM REOCCURRING AND HOW TO CLEAN UP THE SPILL IF THERE IS ANOTHER ONE. A DESCRIPTION OF THE SPILL, WHAT CAUSED IT, AND THE CLEANUP MEASURES WILL ALSO BE INCLUDED.

THE SITE SUPERINTENDENT RESPONSIBLE FOR THE DAY-TO-DAY SITE OPERATIONS, WILL BE THE SPILL PREVENTION AND CLEANUP COORDINATOR. HE/SHE WILL DESIGNATE AT LEAST ONE OTHER SITE PERSONNEL, WHO WILL RECEIVE SPILL PREVENTION AND CLEANUP TRAINING. THESE INDIVIDUALS WILL EACH BECOME RESPONSIBLE FOR A PARTICULAR PHASE OF PREVENTION AND CLEANUP, THE NAMES OF RESPONSIBLE SPILL PERSONNEL WILL BE POSTED IN THE MATERIAL STORAGE AREA AND IF APPLICABLE, IN THE OFFICE TRAILER ONSITE.

MAINTENANCE/INSPECTION PROCEDURES

EROSION AND SEDIMENT CONTROL INSPECTION AND MAINTENANCE PRACTICES

THE FOLLOWING ARE INSPECTION AND MAINTENANCE PRACTICES THAT WILL BE USED TO MAINTAIN EROSION AND SEDIMENT CONTROLS.

NO MORE THAN 10 ACRES OF THE SITE WILL BE CLEARED AT ONE TIME WITHOUT WRITTEN PERMISSION FROM THE ENGINEER.

ALL CONTROL MEASURES WILL BE INSPECTED BY A CERTIFIED SUPERINTENDENT, THE PERSON RESPONSIBLE FOR THE DAY-TO-DAY SITE OPERATION OR SOMEONE APPOINTED BY THE SUPERINTENDENT, AT LEAST ONCE A WEEK AND WITHIN 24 HOURS OF THE END OF ANY STORM EVENT OF 1/2" OR GREATER.

ALL TURBIDITY CONTROL MEASURES WILL BE MAINTAINED IN GOOD WORKING ORDER; IF A REPAIR IS NECESSARY, IT WILL BE INITIATED WITHIN 24 HOURS OF REPORT.

BUILT UP SEDIMENT WILL BE REMOVED FROM SILT FENCE WHEN IT HAS REACHED ONE-THIRD THE HEIGHT OF THE FENCE.

SILT FENCE WILL BE INSPECTED FOR DEPTH OF SEDIMENT, TEARS, TO SEE IF THE FABRIC IS SECURELY ATTACHED TO THE FENCE POSTS, AND TO SEE THAT THE FENCE POSTS ARE FIRMLY IN THE GROUND.

CONSTRUCTION ENTRANCES WILL BE INSPECTED FOR DEPTH OF CRUSHED STONE BED AND FILTER FABRIC CONDITION. THE BED SHALL HAVE A 6" THICKNESS AND THE FILTER FABRIC SHALL BE FREE OF TEARS AND FIRMLY SECURE. ENTRANCES SHALL BE REMOVED PRIOR TO CONSTRUCTION OF DRIVEWAYS.

THE SEDIMENT BASINS WILL BE INSPECTED FOR DEPTH OF SEDIMENT, AND BUILT UP SEDIMENT WILL BE REMOVED WHEN IT REACHES 10 PERCENT OF THE DESIGN CAPACITY OR AT THE END OF THE JOB.

DIVERSION DIKES/SWALES WILL BE INSPECTED AND ANY BREACHES PROMPTLY REPAIRED.

TEMPORARY AND PERMANENT SEEDING AND PLANTING WILL BE INSPECTED FOR BARE SPOTS, WASHOUTS, AND HEALTHY GROWTH.

A MAINTENANCE INSPECTION REPORT WILL BE MADE AFTER EACH INSPECTION. COPY OF THE REPORT FORM TO BE COMPLETED BY THE INSPECTOR IS ATTACHED. THE REPORTS WILL BE KEPT ON SITE DURING CONSTRUCTION AND AVAILABLE UPON REQUEST TO THE OWNER, ENGINEER OR ANY FEDERAL, STATE, AND LOCAL AGENCY APPROVING SEDIMENT AND EROSION PLANS, OR STORM WATER MANAGEMENT PLANS. THE REPORTS SHALL BE MADE AND RETAINED AS PART OF THE STORM WATER POLLUTION PREVENTION PLAN FOR AT LEAST THREE YEARS FROM THE DATE THAT THE SITE IS FINALLY STABILIZED AND THE NOTICE OF TERMINATION IS SUBMITTED. THE REPORTS SHALL IDENTIFY ANY INCIDENTS OF NON-COMPLIANCE.

THE SITE SUPERINTENDENT WILL SELECT UP TO THREE CERTIFIED INDIVIDUALS WHO WILL BE RESPONSIBLE FOR INSPECTIONS, MAINTENANCE AND REPAIR ACTIVITIES, AND FILLING OUT THE INSPECTION AND MAINTENANCE REPORT.

PERSONNEL SELECTED FOR INSPECTION AND MAINTENANCE RESPONSIBILITIES WILL RECEIVE TRAINING FROM THE SITE SUPERINTENDENT AND MUST ENFORCE THE FDEP NPDES SWPPP FOR THIS PROJECT. THEY WILL BE TRAINED IN ALL THE INSPECTION AND MAINTENANCE PRACTICES NECESSARY FOR KEEPING THE EROSION AND SEDIMENT CONTROLS USED ONSITE IN GOOD WORKING ORDER.

NON-STORM WATER DISCHARGES

IT IS EXPECTED THAT THE FOLLOWING NON-STORM WATER DISCHARGES WILL OCCUR FROM THE SITE DURING THE CONSTRUCTION PERIOD.

UNCONTAMINATED GROUNDWATER (FROM DEWATERING EXCAVATION).

ALL NON-STORM WATER DISCHARGES WILL BE DIRECTED TO THE SEDIMENT BASIN OR OTHER APPROPRIATE AREA PRIOR TO DISCHARGE TO EXISTING DITCHES OR WETLANDS.

CONTRACTORS CERTIFICATION

I CERTIFY UNDER PENALTY OF LAW THAT I UNDERSTAND THE TERMS AND CONDITIONS OF THE GENERAL NATIONAL POLLUTANT DISCHARGE ELIMINATION SYSTEM (NPDES) PERMIT THAT AUTHORIZES THE STORM WATER DISCHARGES ASSOCIATED WITH CONSTRUCTION ACTIVITY FROM THE SITE IDENTIFIED AS PART OF THIS CERTIFICATION.

SIGNATURE	BUSINESS NAME & ADDRESS OF CONTRACTOR, ALL SUBS	RESPONSIBLE FOR/DUTIES
		GENERAL CONTRACTOR
		SUBCONTRACTOR
		SUBCONTRACTOR
		SUBCONTRACTOR
		SUBCONTRACTOR

SYM	ZONE	REVISIONS	DATE	APPROVED

JONES EDMUNDS
730 NE WALDO ROAD, GAINESVILLE, FLORIDA 32641 / (352) 377-5821
3910 S WASHINGTON AVE, SUITE 210, TITUSVILLE, FLORIDA 32780 / (321) 269-2950

SIGNATURES	DATE
DRAWN P. UPSTILL	12.18.13
CHECKED M. O'BRIEN	12.18.13
SUBMITTED: ARCH/ENG OF RECORD W. NICKEL	12/18/13
ST of LICENSURE: FL LICENSE NO: 68638	
APPROVED R. KOLTER	12/18/13
K. MILLER	12/19/13

NATIONAL AERONAUTICS AND SPACE ADMINISTRATION
JOHN F. KENNEDY SPACE CENTER, NASA
KENNEDY SPACE CENTER, FLORIDA

KSC CENTRAL CAMPUS
REPLACEMENT HEADQUARTERS BUILDING
PHASE 1
VOL. 1 OF 4
EROSION CONTROL AND SWPPP NOTES

C149

FILE NO.	SIZE	DWG. NO.
C-12070.00	F	79K39622 VOL 1

PCN. NO. 98745.1a

SHEET 69

KSC FORM 1-11 (3/76)(C/G 3/94)

NOTICE: When Government drawings, specifications, or other data are used for any purpose other than in connection with a definitely related Government procurement operation, the United States Government thereby incurs no responsibility nor obligation whatsoever; and the fact that the Government may have formulated, furnished, or in any way supplied the said drawings, specifications or other data is not to be regarded by implication or otherwise as in any manner licensing the holder or any other person or corporation, or conveying any rights or permission to manufacture, use, or sell any patented invention that may in any way be related thereto.

NOTES

A. PROVIDE INLET PROTECTION TO ALL PROPOSED INLETS, AND PROVIDE INLET PROTECTION TO EXISTING INLETS WITHIN 100 OF PROPOSED STORM INLETS.

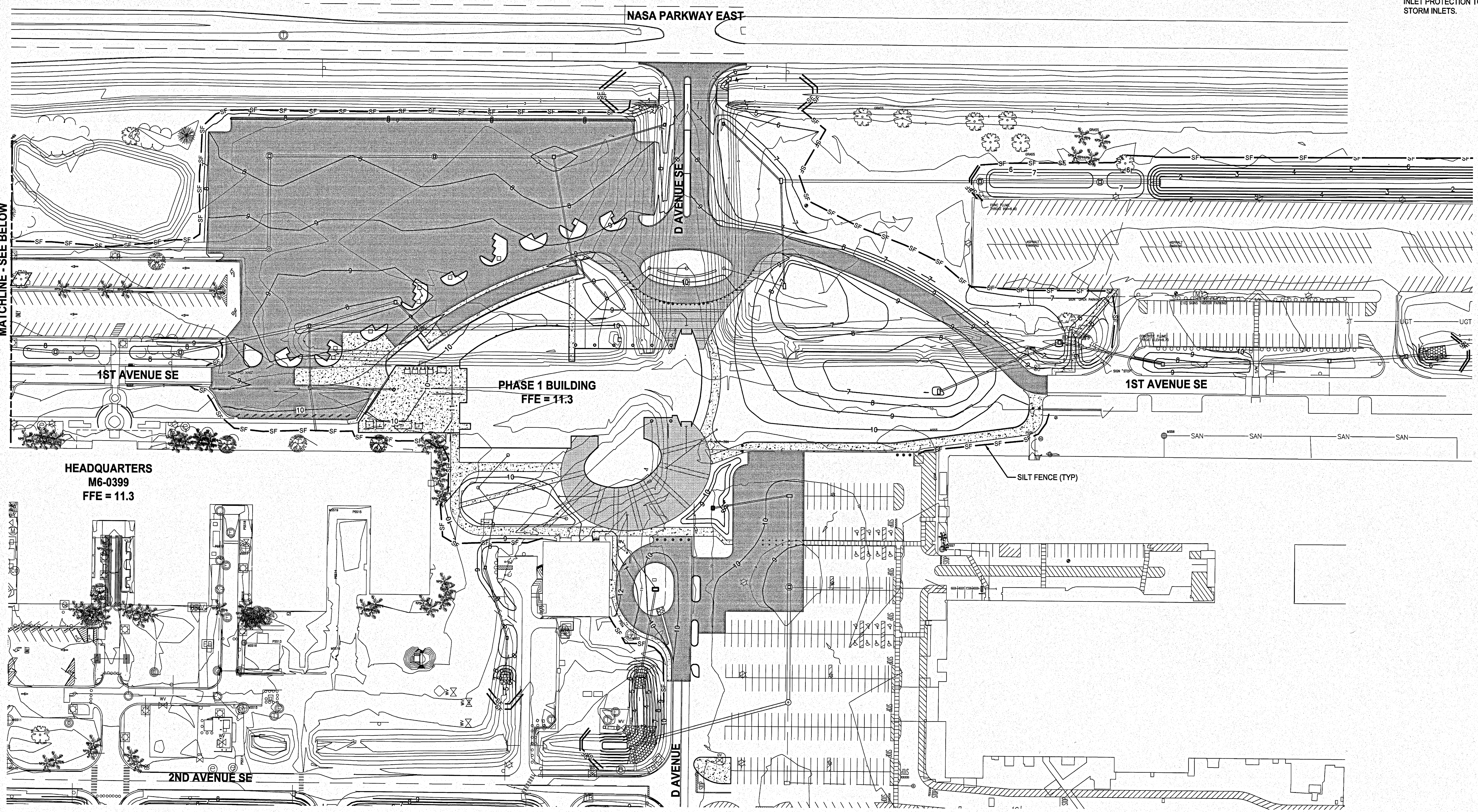

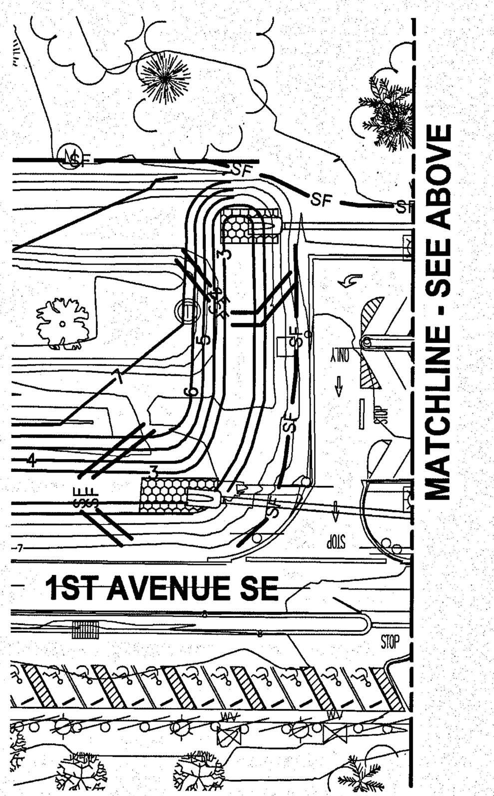

GRAPHIC SCALE

0 30 60 120 180

SCALE IN FEET
1" = 60'

N

SYM	ZONE		DATE	APPROVED

REVISIONS

JONES EDMUNDS
730 NE WALDO ROAD, GAINESVILLE, FLORIDA 32641 / (352) 377-5821
3910 S WASHINGTON AVE, SUITE 210, TITUSVILLE, FLORIDA 32780 / (321) 269-2950

SIGNATURES	DATE
DRAWN P. UPSTILL	12.18.13
CHECKED M. O'BRIEN	12.18.13
SUBMITTED ARCH/ENG OF RECORD W. NICKEL	12/18/13
ST of LICENSURE: FL LICENSE NO. 68638	
APPROVED R. KOLLER	12/18/13
K. MILLER	12/19/13

NATIONAL AERONAUTICS AND SPACE ADMINISTRATION
JOHN F. KENNEDY SPACE CENTER, NASA
KENNEDY SPACE CENTER, FLORIDA

KSC CENTRAL CAMPUS
REPLACEMENT HEADQUARTERS BUILDING
PHASE 1
VOL. 1 OF 4

EROSION CONTROL AND SWPPP PLAN

C150

FILE NO.	SIZE	DWG. NO.
C-12070.00	F	79K39622 VOL 1

PCN. NO. 98745.1a

SHEET 70

KSC FORM 1-11 (3/76)(C/G 3/94)

NOTICE: When Government drawings, specifications, or other data are used for any purpose other than in connection with a definitely related Government procurement operation, the United States Government thereby incurs no responsibility nor obligation whatsoever; and the fact that the Government may have formulated, furnished, or in any way supplied the said drawings, specifications or other data is not to be regarded by implication or otherwise as in any manner licensing the holder or any other person or corporation, or conveying any rights or permission to manufacture, use, or sell any patented invention that may in any way be related thereto.

SEDIMENT AND EROSION CONTROL NOTES

A. THE SITE CONTRACTOR IS RESPONSIBLE FOR REMOVING THE TEMPORARY EROSION AND SEDIMENT CONTROL DEVICES AFTER COMPLETION OF CONSTRUCTION AND ONLY WHEN AREAS HAVE BEEN STABILIZED.

B. THE CONTRACTOR SHALL MAINTAIN A CLEAR PATH FOR ALL SURFACE WATER DRAINAGE STRUCTURES AND SWALES AS WELL AS PROVIDE MEASURES TO PREVENT SILTATION OF STORMWATER TREATMENT SYSTEMS AND CONTROL STRUCTURES DURING ALL PHASES OF CONSTRUCTION. THE CONTRACTOR SHALL UTILIZE WHATEVER MEANS NECESSARY TO MANAGE STORMWATER SUCH THAT IMPACT TO CONSTRUCTION IS MINIMIZED. THE CONTRACTOR SHALL BE RESPONSIBLE FOR ALL WORK, INCLUDING PROVIDING EQUIPMENT, LABOR, FILL, ETC. NECESSARY TO REMEDIATE AND/OR RESTORE ALL AREAS IMPACTED BY EROSION, RUNOFF, AND STORMWATER.

C. FOR ADDITIONAL INFORMATION ON SEDIMENT AND EROSION CONTROL REFER TO "THE FLORIDA DEVELOPMENT MANUAL - A GUIDE TO SOUND LAND AND WATER MANAGEMENT" FROM THE STATE OF FLORIDA DEPARTMENT OF ENVIRONMENTAL REGULATION (F.D.E.R.) CHAPTER 6.

D. EROSION AND SEDIMENT CONTROL BARRIERS SHALL BE PLACED ADJACENT TO ALL DOWNSTREAM AREAS WHERE THERE IS POTENTIAL FOR DOWNSTREAM WATER QUALITY DEGRADATION. SEE DETAILS (THIS SHEET) FOR TYPICAL CONSTRUCTION.

E. SOD SHALL BE PLACED IN AREAS WHICH REQUIRE IMMEDIATE EROSION PROTECTION TO ENSURE WATER QUALITIES ARE MAINTAINED.

F. THE CONTRACTOR SHALL BE REQUIRED TO RESPOND TO ALL WATER MANAGEMENT DISTRICT INQUIRES, RELATIVE TO COMPLIANCE OF SJRWMD FOR EROSION AND SEDIMENTATION CONTROL. THE COST OF THIS COMPLIANCE SHALL BE PART OF THE CONTRACT.

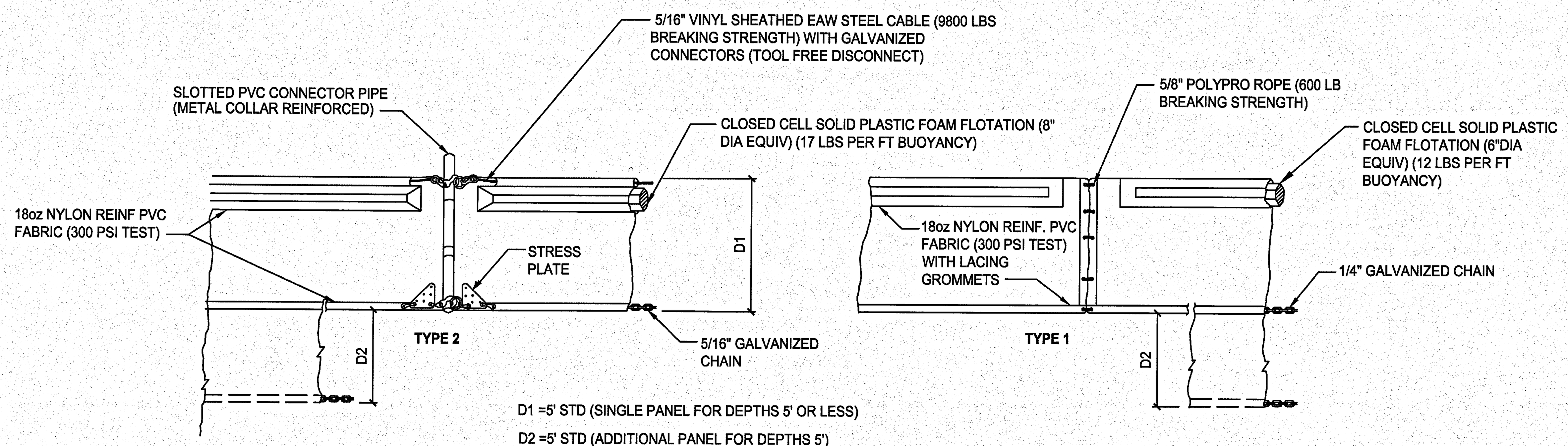

D1 =5' STD (SINGLE PANEL FOR DEPTHS 5' OR LESS)

D2 =5' STD (ADDITIONAL PANEL FOR DEPTHS 5')

CURTAIN TO REACH BOTTOM UP TO DEPTHS OF 10 FEET. TWO (2) PANELS TO BE USED FOR DEPTHS GREATER THAN 10 FEET UNLESS SPECIAL DEPTH CURTAINS SPECIFICALLY CALL FOR IN THE PLANS OR AS DETERMINED BY THE ENGINEER.

NOTICE: COMPONENTS OF TYPES 1 AND 2 MAY BE SIMILAR OR IDENTICAL TO PROPRIETARY DESIGNS. ANY INFRINGEMENT ON THE PROPRIETARY RIGHTS OF THE DESIGNER SHALL BE THE SOLE RESPONSIBILITY OF THE USER. SUBSTITUTIONS FOR TYPES 1 AND 2 SHALL BE AS APPROVED BY THE ENGINEER.

TYPICAL FLOATING TURBIDITY BARRIERS DETAIL

NTS

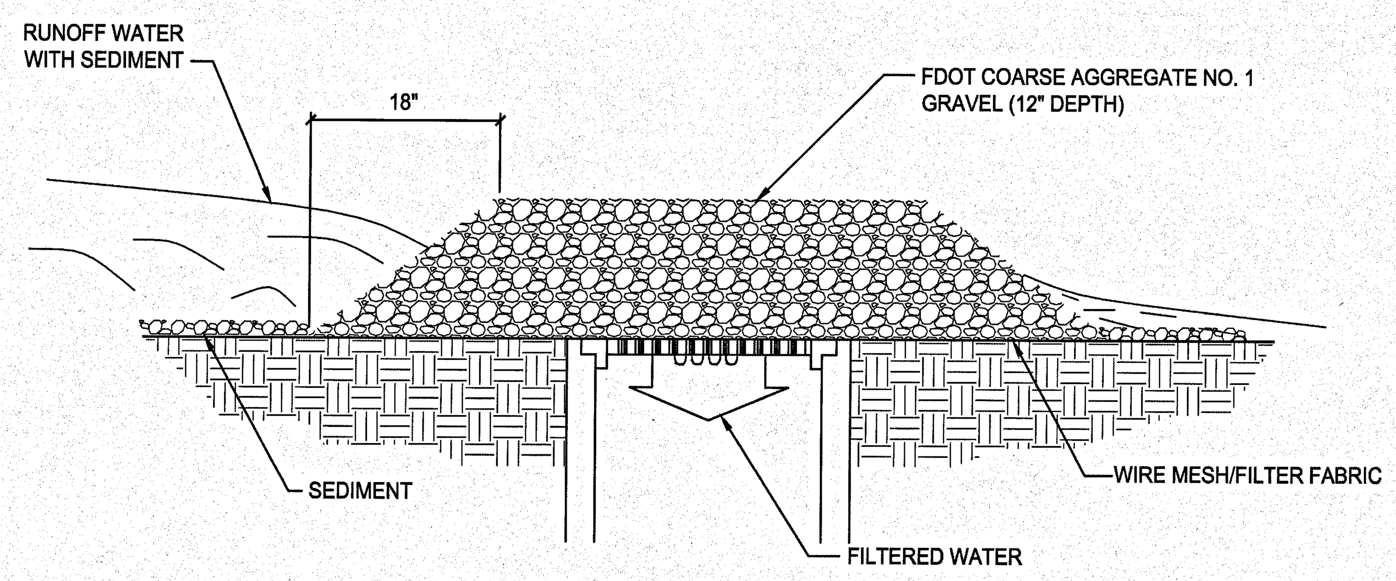

GRAVEL AND WIRE MESH DROP INLET SEDIMENT FILTER DETAIL

NTS

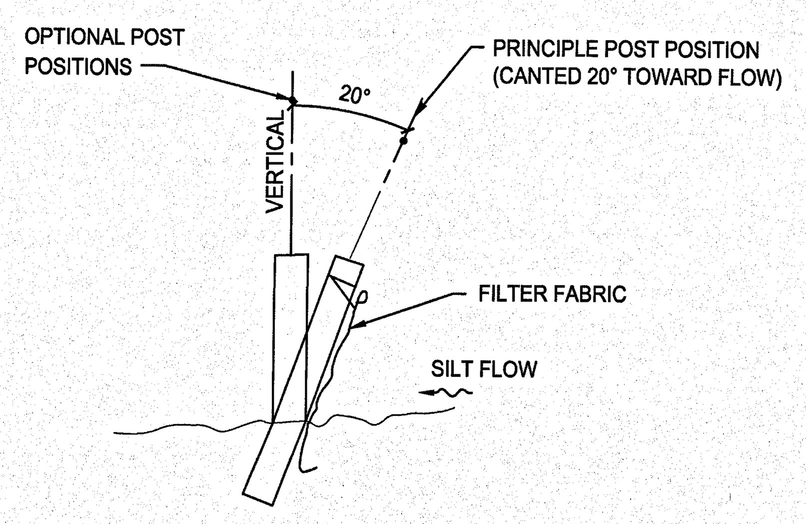

SECTION

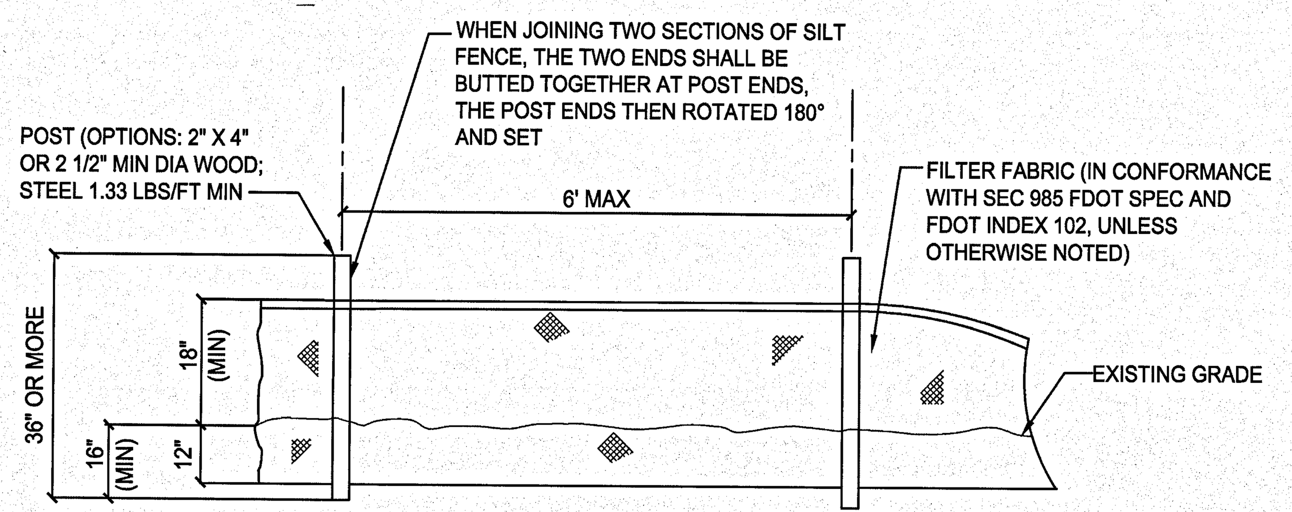

ELEVATION

TYPICAL SILT FENCE DETAIL

NTS

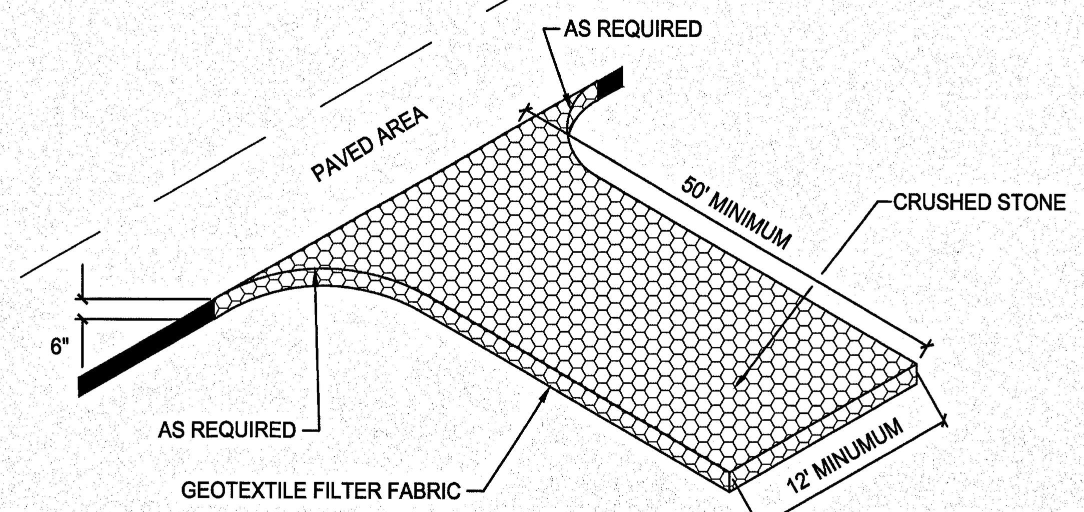

STABILIZED CONSTRUCTION ENTRANCE/EXIT DETAIL

NTS

SYM	ZONE	REVISIONS	DATE	APPROVED

JONES EDMUNDS
730 NE WALDO ROAD, GAINESVILLE, FLORIDA 32641 / (352) 377-5821
3910 S WASHINGTON AVE, SUITE 210, TITUSVILLE, FLORIDA 32780 / (321) 269-2950

SIGNATURES	DATE
DRAWN P. UPSTILL	12.18.13
CHECKED M. O'BRIEN	12.18.13
SUBMITTED: ARCH/ENG OF RECORD W. NICKEL	12/18/13
ST of LICENSURE: FL LICENSE NO: 68638	
APPROVED R. KOLLER	12/18/13
K. MILLER	12/19/13

NATIONAL AERONAUTICS AND SPACE ADMINISTRATION
JOHN F. KENNEDY SPACE CENTER, NASA
KENNEDY SPACE CENTER, FLORIDA

KSC CENTRAL CAMPUS
REPLACEMENT HEADQUARTERS BUILDING
PHASE 1
VOL. 1 OF 4

EROSION CONTROL DETAILS

FILE NO. C-12070.00 | SIZE F | DWG. NO. 79K39622 VOL 1

PCN. NO. 98745.1a | SHEET 71

C151

KSC FORM 1-11 (3/76)(C/G 3/94)

NOTICE: When Government drawings, specifications, or other data are used for any purpose other than in connection with a definitely related Government procurement operation, the United States Government thereby incurs no responsibility nor obligation whatsoever; and the fact that the Government may have formulated, furnished, or in any way supplied the said drawings, specifications or other data is not to be regarded by implication or otherwise as in any manner licensing the holder or any other person or corporation, or conveying any rights or permission to manufacture, use, or sell any patented invention that may in any way be related thereto.

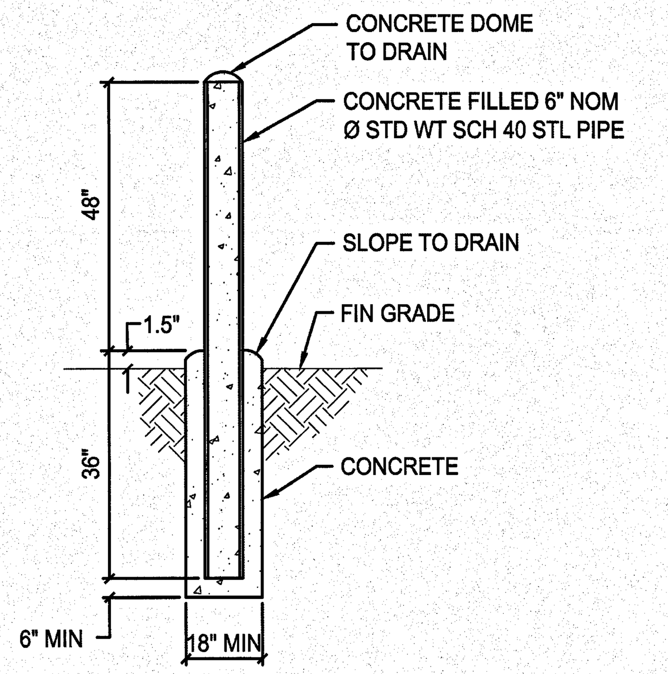

NOTES:
A. ACTUAL INSTALLATION LOCATION OF EACH BOLLARD SHALL BE AS SHOWN ON THE DRAWINGS OR AS DIRECTED IN THE FIELD.
B. PAINT ALL PIPING MATERIALS OSHA SAFETY YELLOW.
C. FOR CHAIN GATE, PROVIDE 3/4" HIGH-TEST CHAIN FOR GATE - 15,000 LBS WORKING LOAD LIMIT.
D. BOLLARD SHALL BE A MINIMUM OF 3' FROM EOP.

TYPE 1 BOLLARD DETAIL 1
NTS

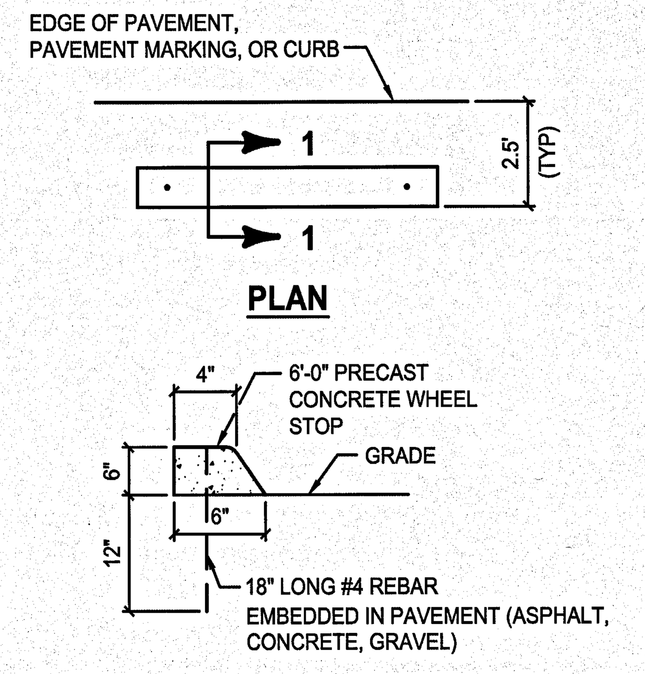

TYPICAL WHEEL STOP DETAIL 4
NTS

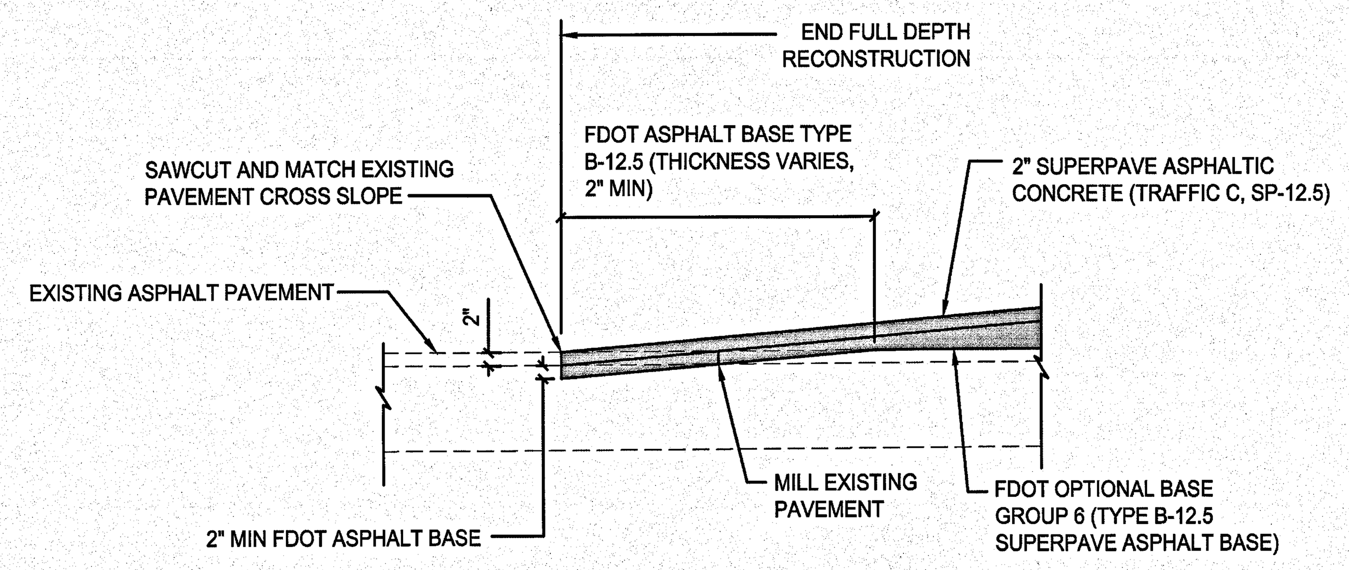

BUTT JOINT DETAIL 6
NTS C119

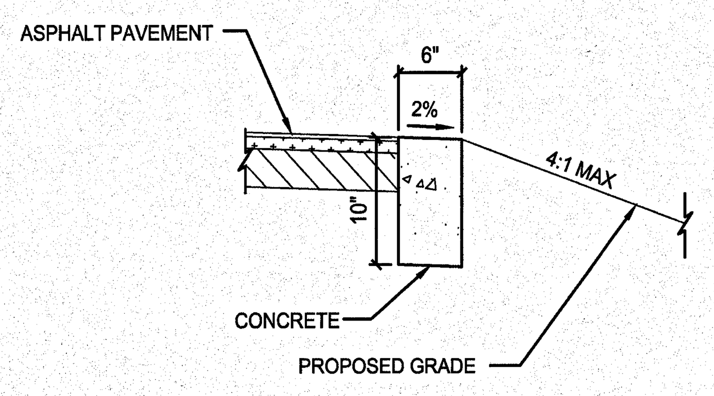

RIBBON CURB DETAIL 2
NTS

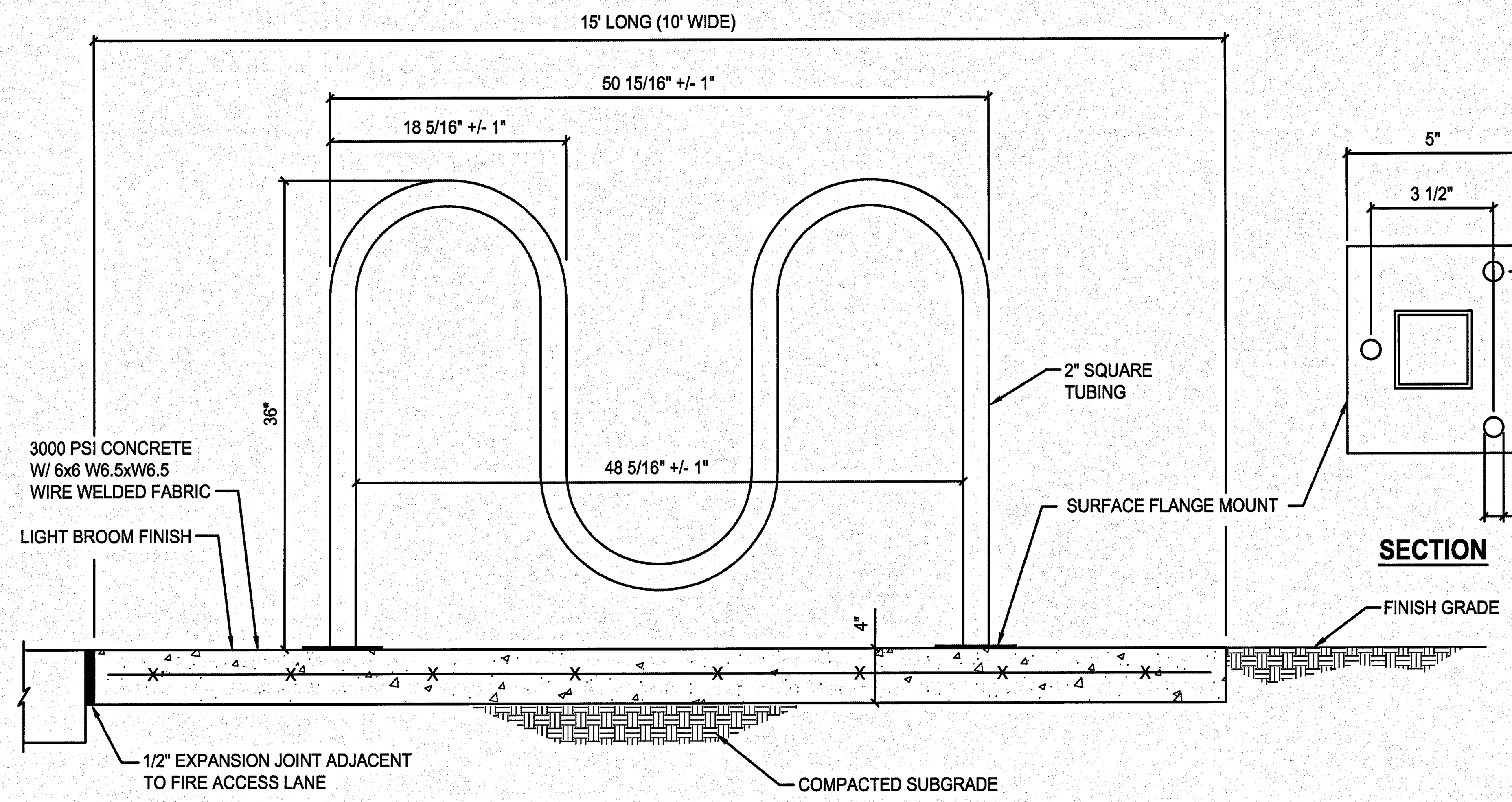

NOTES:
A. INSTALL BIKE RACKS ACCORDING TO MANUFACTURER'S SPECIFICATIONS.
B. COLOR SHALL BE BLACK POWDER COAT, SEE MANUFACTURER'S SPECIFICATIONS
C. BIKE RACK SHALL BE MADRAX MODEL CS200-5-IG (SURFACE FLANGE MOUNTED) OR APPROVED EQUAL.

BIKE RACK DETAIL 5
NTS C117

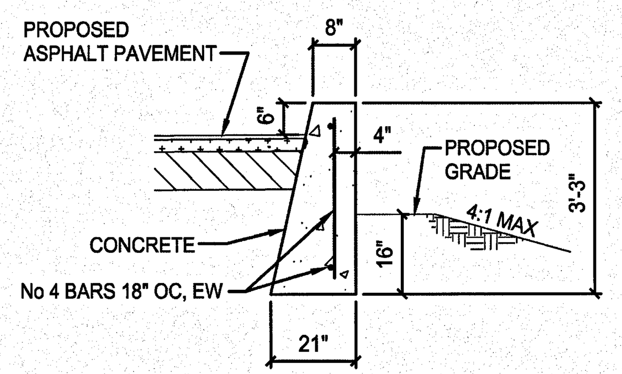

CONCRETE CURB DETAIL 3
NTS

SYM	ZONE	REVISIONS	DATE	APPROVED

JONES EDMUNDS
730 NE WALDO ROAD, GAINESVILLE, FLORIDA 32641 / (352) 377-5821
3910 S WASHINGTON AVE, SUITE 210, TITUSVILLE, FLORIDA 32780 / (321) 269-2950

SIGNATURES	DATE
DRAWN P. UPSTILL	12.18.13
CHECKED M. O'BRIEN	12.18.13
SUBMITTED: ARCHITECT OF RECORD W. NICKEL	12/18/13
ST of LICENSURE: FL LICENSE NO. 59638	
APPROVED	12/18/13
K. MILLER	12/18/13

NATIONAL AERONAUTICS AND SPACE ADMINISTRATION
JOHN F. KENNEDY SPACE CENTER, NASA
KENNEDY SPACE CENTER, FLORIDA

KSC CENTRAL CAMPUS
REPLACEMENT HEADQUARTERS BUILDING
PHASE 1
VOL. 1 OF 4

CIVIL DETAILS

C201

FILE NO. C-12070.00 | SIZE F | DWG. NO. 79K39622 VOL 1
PCN. NO. 98745.1a | SHEET 72

KSC FORM 1-11 (3/76)(C/O 3/94)

NOTICE: When Government drawings, specifications, or other data are used for any purpose other than in connection with a definitely related Government procurement operation, the United States Government thereby incurs no responsibility nor obligation whatsoever; and the fact that the Government may have formulated, furnished, or in any way supplied the said drawings, specifications or other data is not to be regarded by implication or otherwise as in any manner licensing the holder or any other person or corporation, or conveying any rights or permission to manufacture, use, or sell any patented invention that may in any way be related thereto.

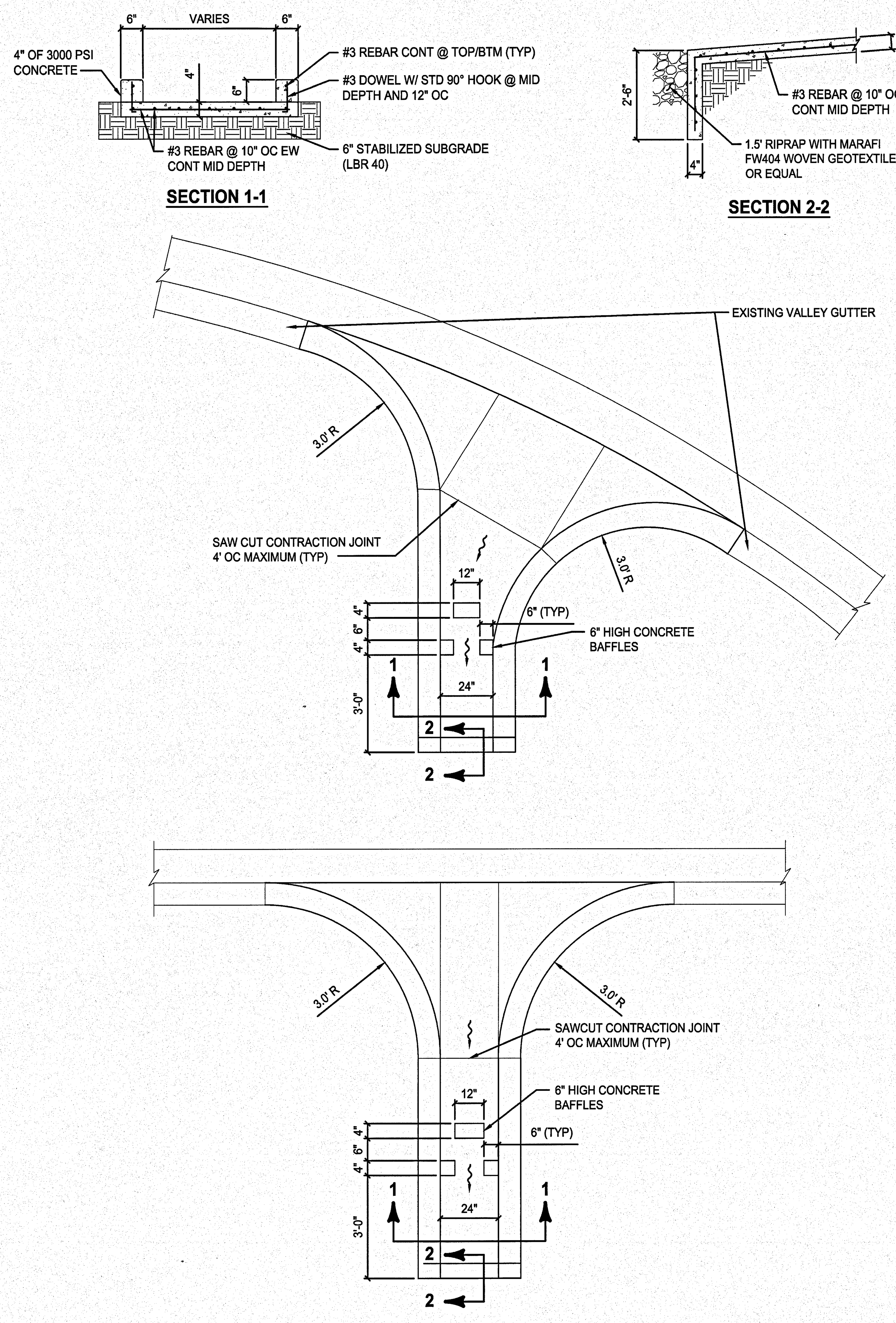

CONCRETE FLUME DETAIL 1
NTS C134

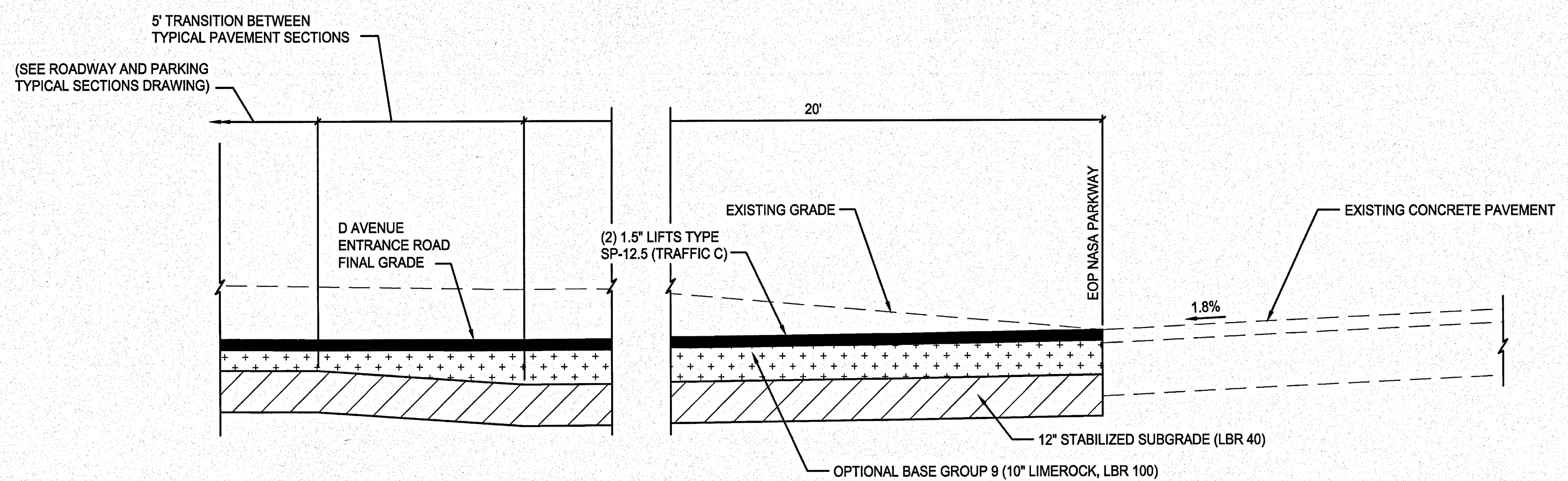

(D AVENUE AND NASA PARKWAY)

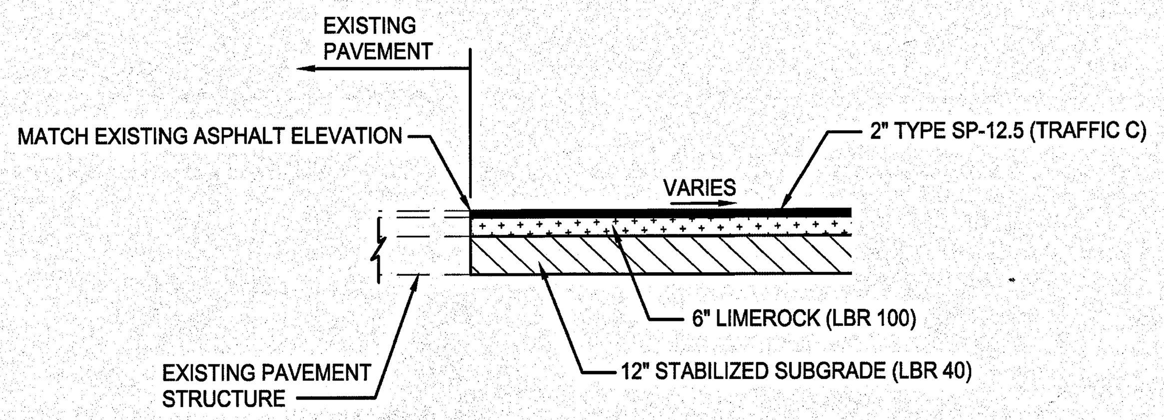

TIE INTO EXISTING PAVEMENT SECTION 2
NTS

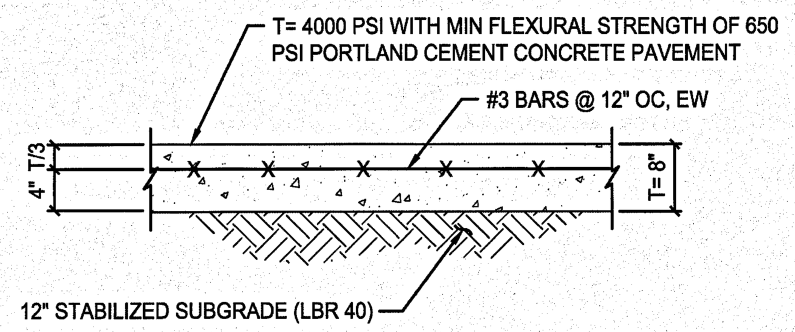

NOTES:

A. REINFORCE ODD SHAPED SLABS AND OTHER SLABS AS INDICATED ON JOINTING PLAN.

B. ALL PAVEMENT AREAS SHALL BE UNDERCUT 24". FILL SHALL BE PLACED IN 8" LIFTS AND COMPACTED PER SPECIFICATIONS.

CONCRETE PAVEMENT SECTION 3
NTS

SYM	ZONE	REVISIONS	DATE	APPROVED

JONES EDMUNDS
730 NE WALDO ROAD, GAINESVILLE, FLORIDA 32641 / (352) 377-5821
3910 S WASHINGTON AVE, SUITE 210, TITUSVILLE, FLORIDA 32780 / (321) 269-2950

SIGNATURES	DATE
DRAWN P. UPSTILL	12.18.13
CHECKED M. O'BRIEN	12.18.13
SUBMITTED: ARCH/ENG OF RECORD W. NICKEL	12/18/13
ST of LICENSURE: FL LICENSE NO: 68638	
APPROVED R. KOLLER	12/18/13
K. MILLER	12/9/13

NATIONAL AERONAUTICS AND SPACE ADMINISTRATION
JOHN F. KENNEDY SPACE CENTER, NASA
KENNEDY SPACE CENTER, FLORIDA

KSC CENTRAL CAMPUS
REPLACEMENT HEADQUARTERS BUILDING
PHASE 1
VOL. 1 OF 4

CIVIL DETAILS

C202

FILE NO. C-12070.00 | SIZE F | DWG. NO. 79K39622 VOL 1
PCN. NO. 98745.1a | SHEET 73

KSC FORM 1-11 (3/76)(C/G 3/94)

NOTICE: When Government drawings, specifications, or other data are used for any purpose other than in connection with a definitely related Government procurement operation, the United States Government thereby incurs no responsibility nor obligation whatsoever; and the fact that the Government may have formulated, furnished, or in any way supplied the said drawings, specifications or other data is not to be regarded by implication or otherwise as in any manner licensing the holder or any other person or corporation, or conveying any rights or permission to manufacture, use, or sell any patented invention that may in any way be related thereto.

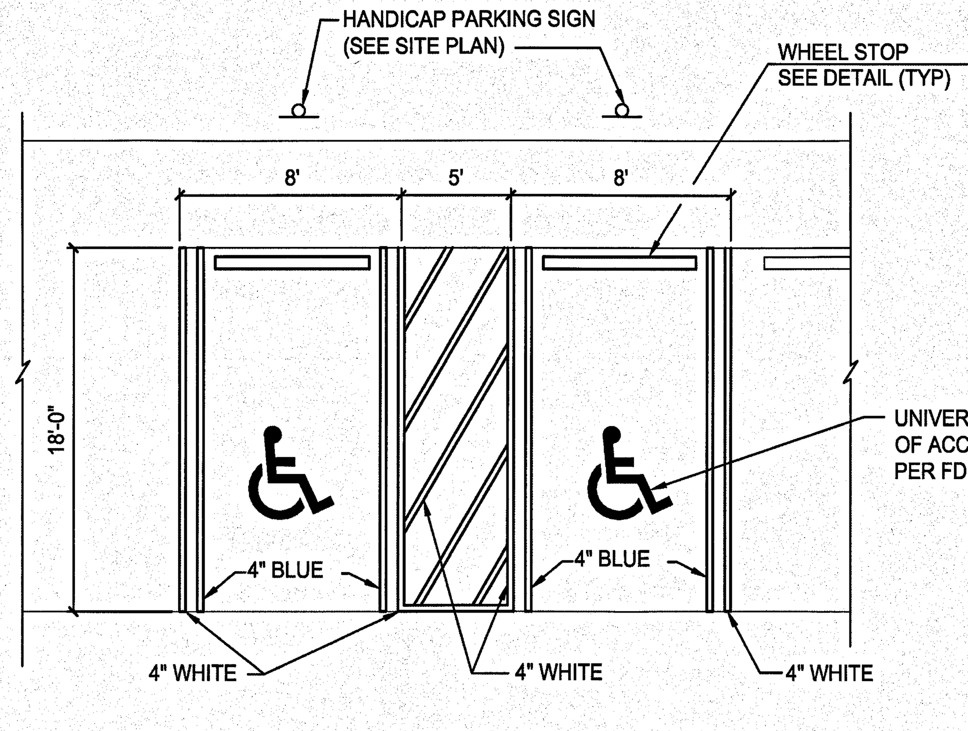

TYPICAL H/C PARKING SPACE DETAIL 1
NTS

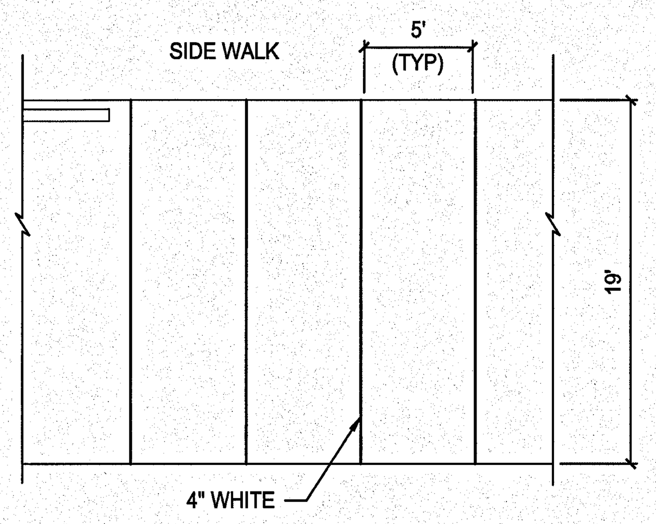

MOTORCYCLE PARKING DETAIL 4
NTS C115

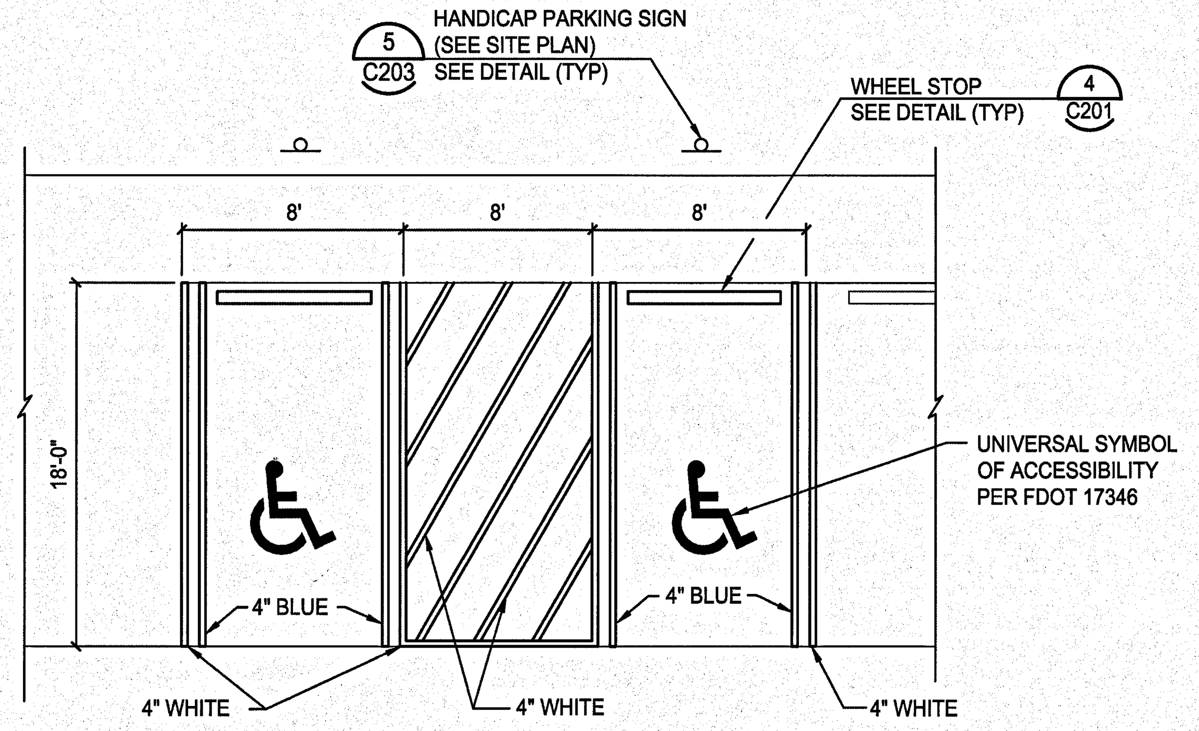

TYPICAL VAN ACCESSIBLE H/C PARKING SPACE DETAIL 2
NTS

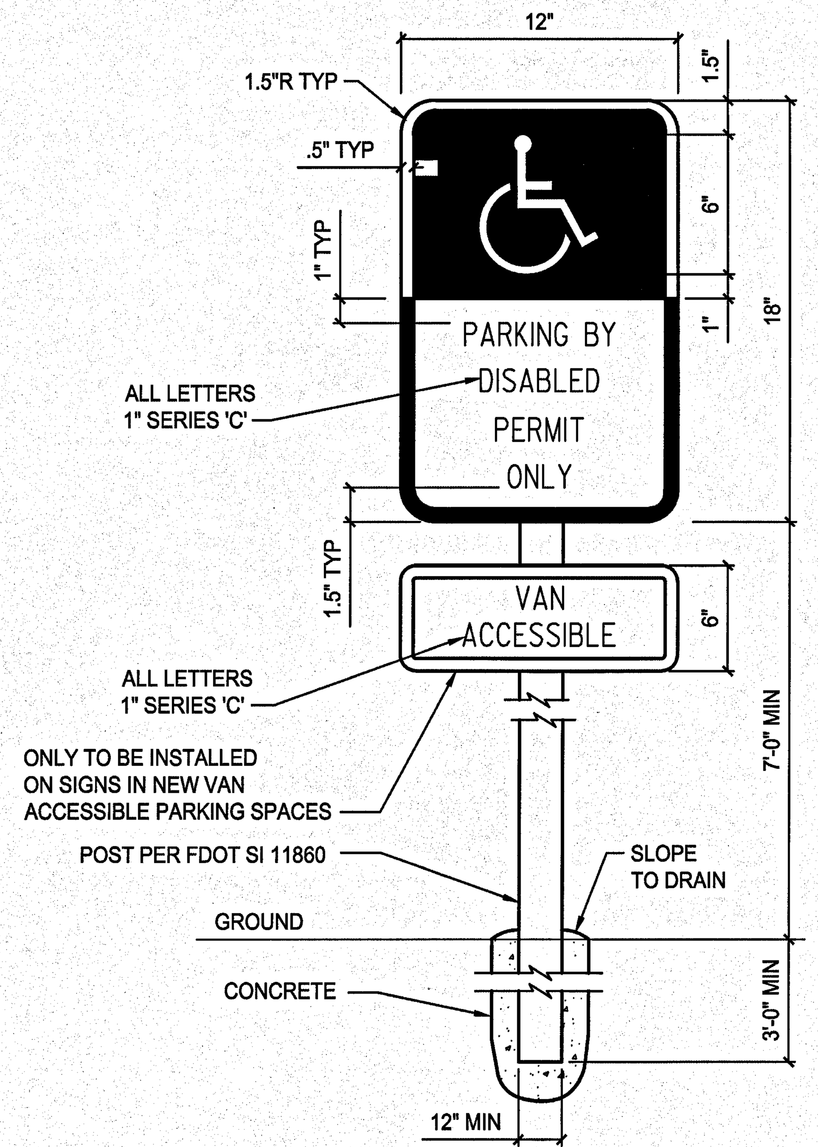

HANDICAP PARKING SIGN DETAIL 5
NTS

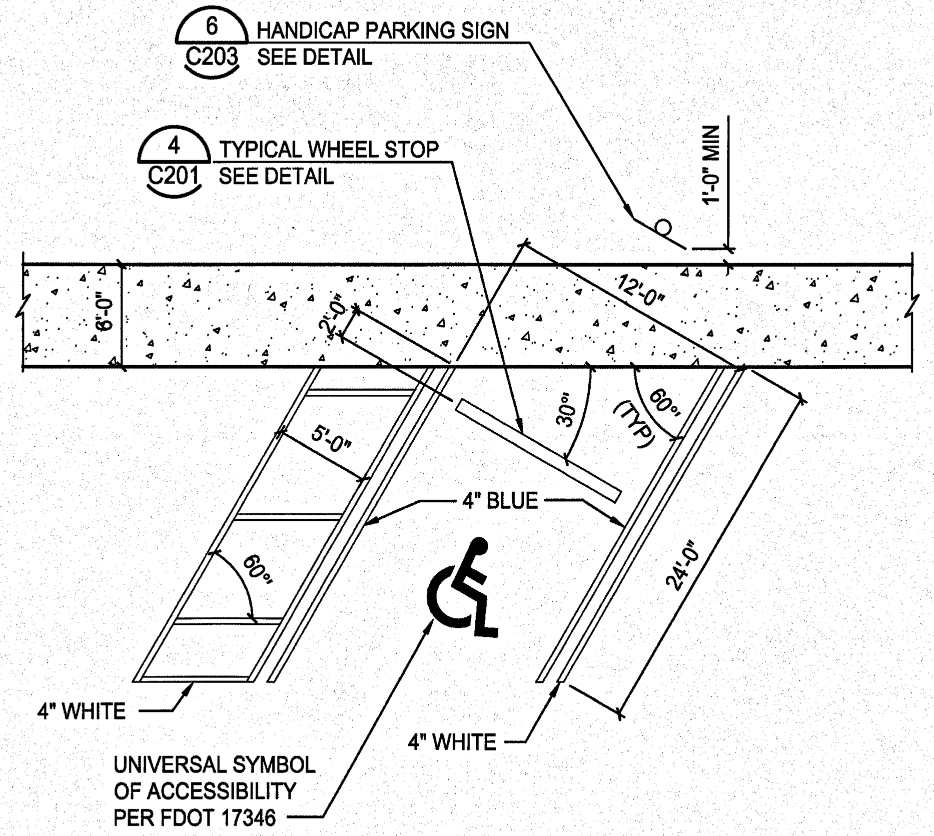

TYPICAL ANGLED H/C PARKING SPACE DETAIL 3
NTS C203

NOTES

- A TYPICAL ANGLED H/C PARKING SPACE. SEE DETAIL 3 C203
- B HYDRO-BLAST EXISTING STRIPING TO REMOVE
- C REMOVE EXISTING HANDICAP SIGN

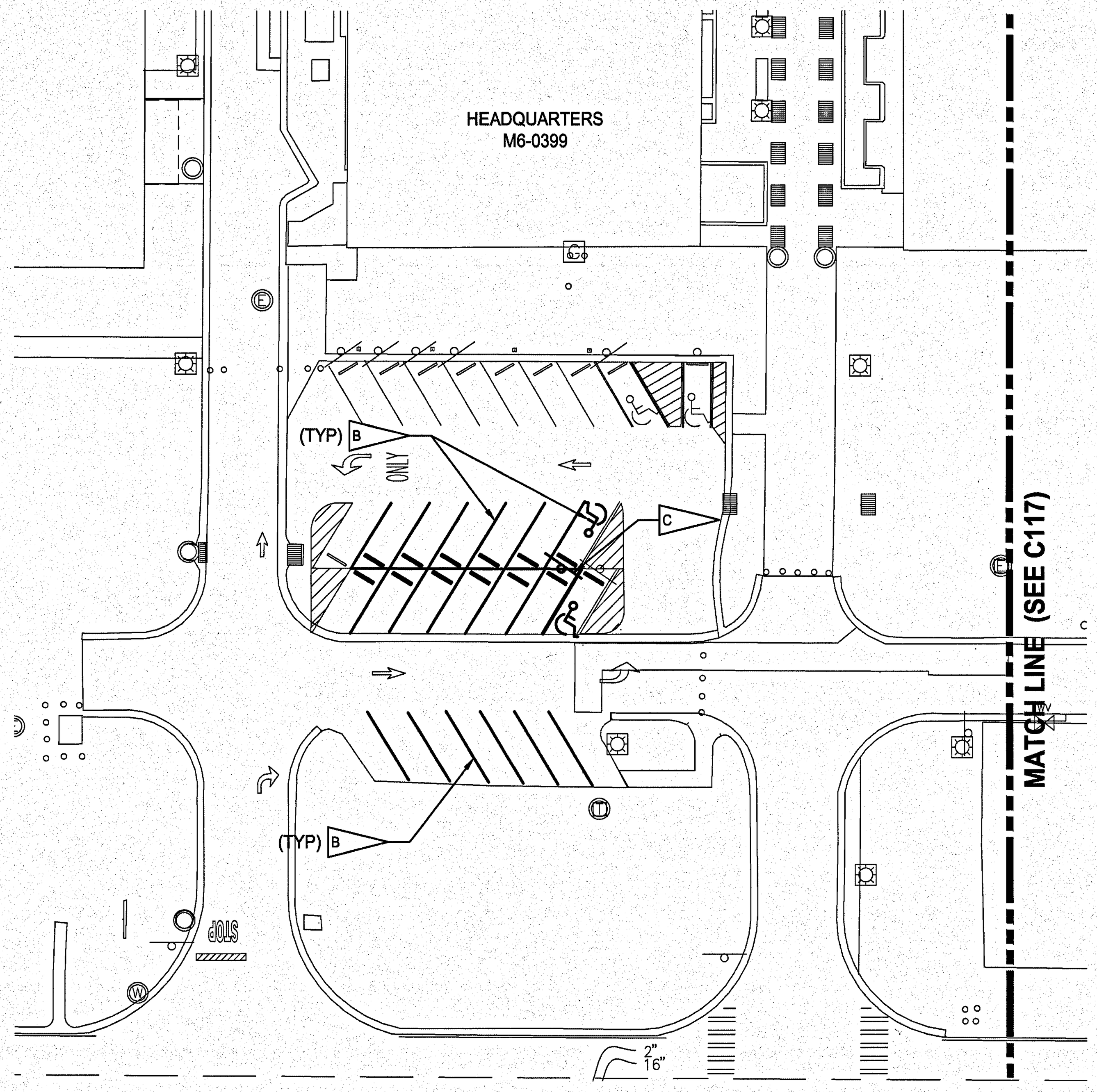

HANDICAP PARKING DEMOLITION PLAN

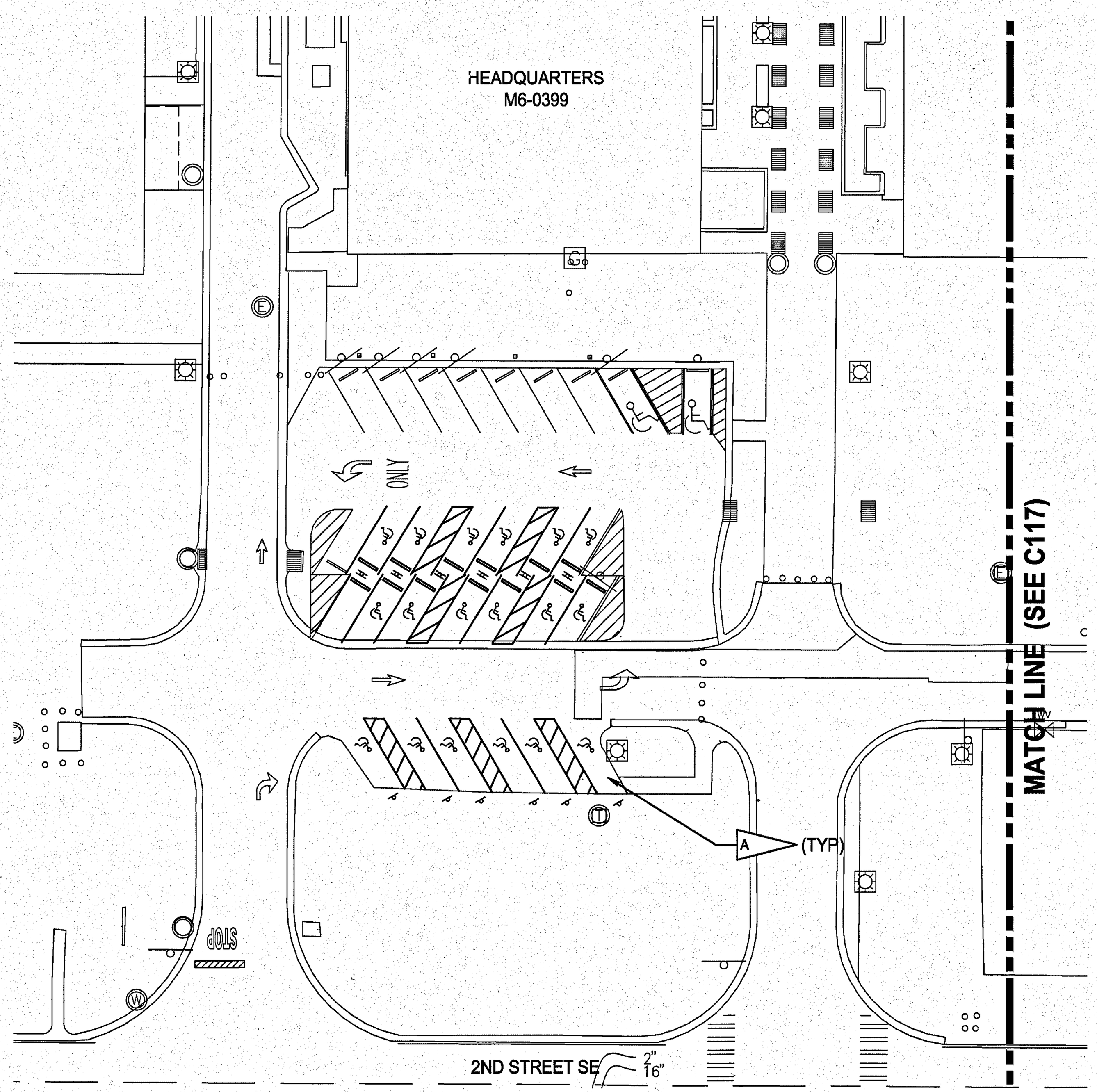

PLAN
HANDICAP PARKING LAYOUT DETAIL 6
1"=30' C101

GRAPHIC SCALE
0 15 30 60 90
SCALE IN FEET
1" = 30'

SYM	ZONE		DATE	APPROVED

REVISIONS

JONES EDMUNDS
730 NE WALDO ROAD, GAINESVILLE, FLORIDA 32641 / (352) 377-5821
3910 S WASHINGTON AVE, SUITE 210, TITUSVILLE, FLORIDA 32780 / (321) 269-2950

SIGNATURES	DATE
DRAWN P. UPSTILL	12.18.13
CHECKED M. O'BRIEN	12.18.13
SUBMITTED: ARCH/ENG OF RECORD W. NICKEL	12/18/13
ST of LICENSURE: FL LICENSE NO: 68638	
APPROVED R. KOLLER	12.18.13
K. MILLER	12/19/13

NATIONAL AERONAUTICS AND SPACE ADMINISTRATION
JOHN F. KENNEDY SPACE CENTER, NASA
KENNEDY SPACE CENTER, FLORIDA

KSC CENTRAL CAMPUS
REPLACEMENT HEADQUARTERS BUILDING
PHASE 1
VOL. 1 OF 4

CIVIL DETAILS

C203

FILE NO.	SIZE	DWG. NO.
C-12070.00	F	79K39622 VOL 1

PCN. NO. 98745.1a SHEET 74

KSC FORM 1-11 (3/76)(C/G 3/94)

NOTICE: When Government drawings, specifications, or other data are used for any purpose other than in connection with a definitely related Government procurement operation, the United States Government thereby incurs no responsibility nor obligation whatsoever; and the fact that the Government may have formulated, furnished, or in any way supplied the said drawings, specifications or other data is not to be regarded by implication or otherwise as in any manner licensing the holder or any other person or corporation, or conveying any rights or permission to manufacture, use, or sell any patented invention that may in any way be related thereto.

NOTES

A. CONCRETE EXPANSION JOINT TYPE 1. SEE DETAIL 1/C204

B. CONCRETE EXPANSION JOINT TYPE 2. SEE DETAIL 2/C204

C. ALL OTHER CONCRETE JOINTS SHALL BE SAW-CUT CONTRACTION JOINTS. SEE DETAIL 3/C204

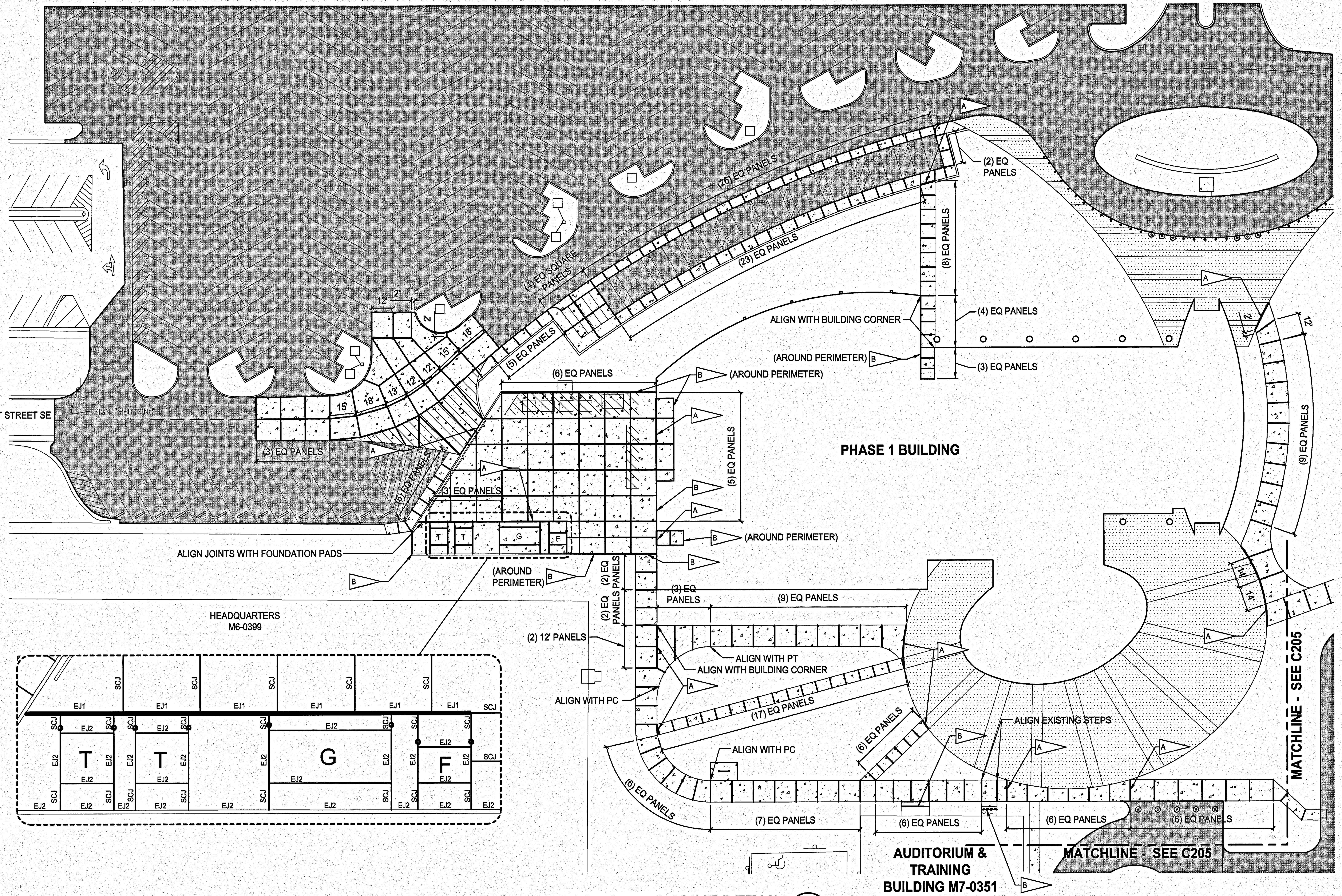

CONCRETE JOINT DETAIL 1/C101

1"=30'

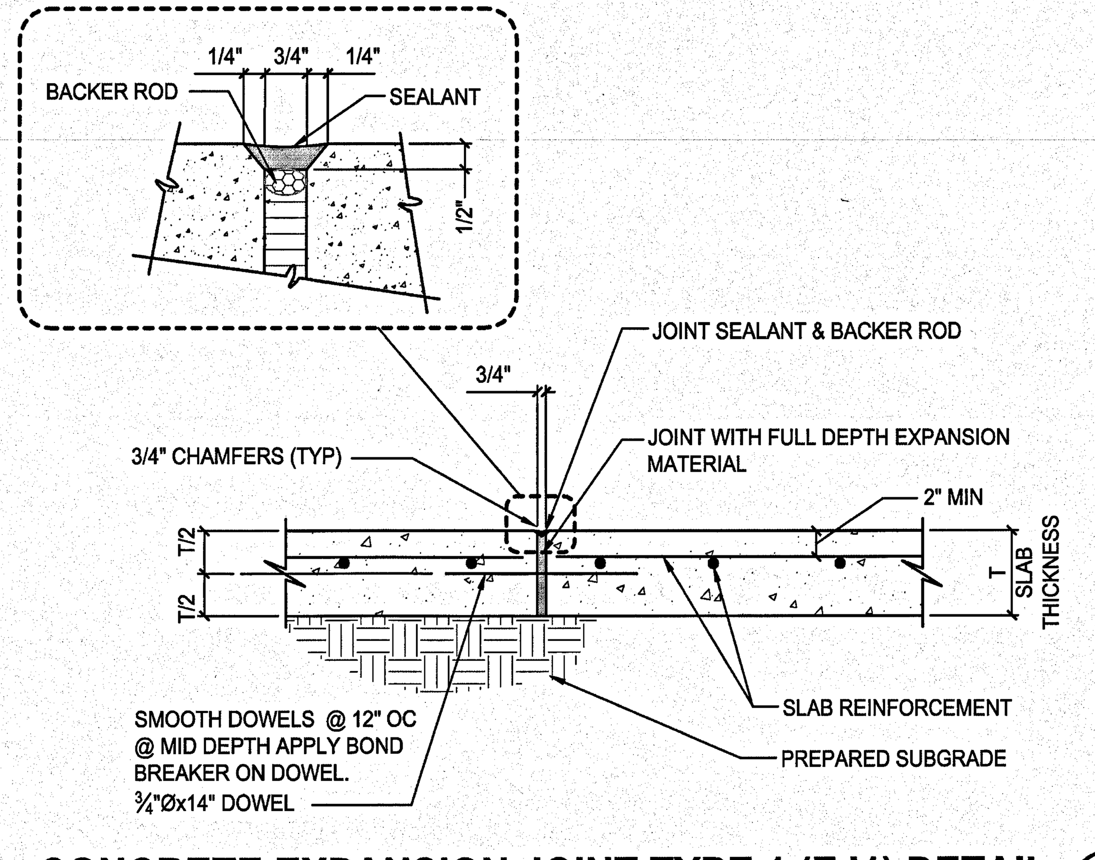

CONCRETE EXPANSION JOINT TYPE 1 (EJ1) DETAIL 1

NTS

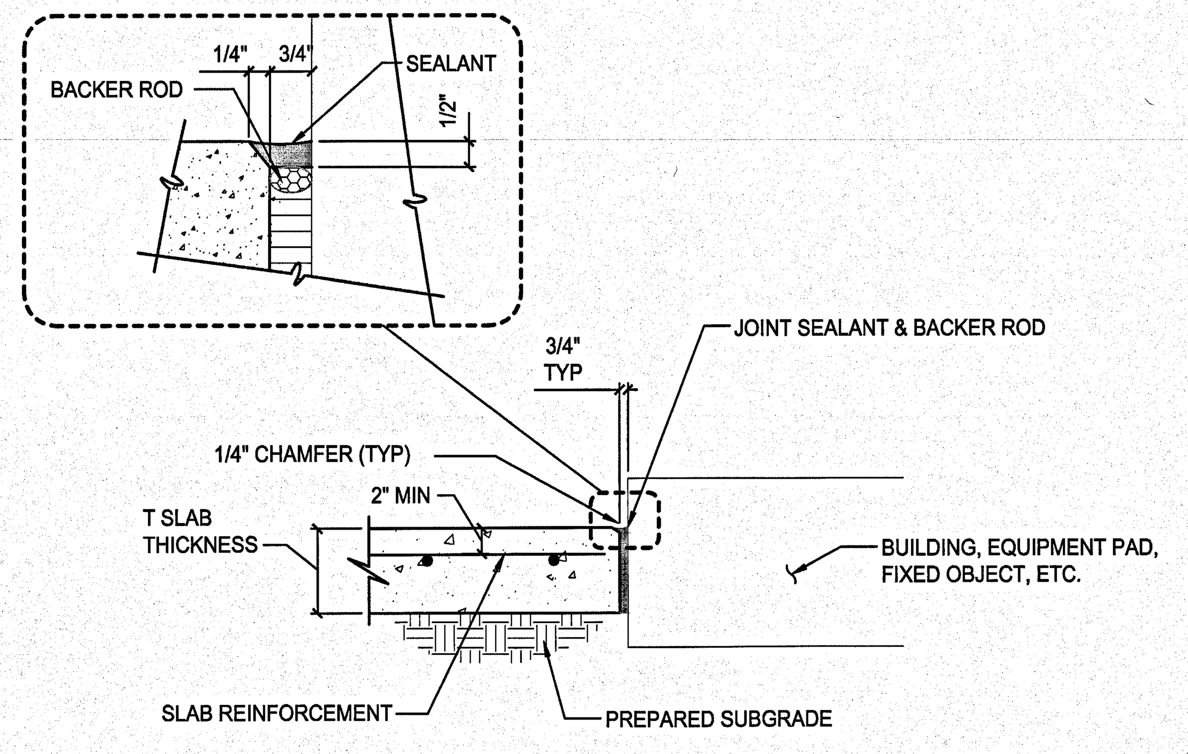

CONCRETE EXPANSION JOINT TYPE 2 (EJ2) DETAIL 2

NTS

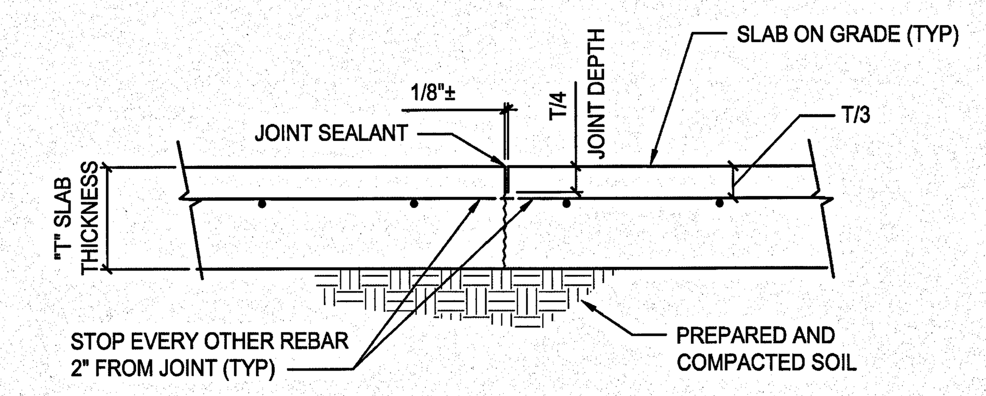

NOTE:
SAW-CUT JOINTS SHALL BE PERFORMED WITHIN 4 TO 8 HOURS AFTER CONCRETE PLACEMENT.

SAW-CUT CONTRACTION JOINT (SCJ) DETAIL 3

NTS

GRAPHIC SCALE

0 15 30 60 90

SCALE IN FEET
1" = 30'

SYM	ZONE	REVISIONS	DATE	APPROVED

JONES EDMUNDS
730 NE WALDO ROAD, GAINESVILLE, FLORIDA 32641 / (352) 377-5821
3910 S WASHINGTON AVE, SUITE 210, TITUSVILLE, FLORIDA 32780 / (321) 269-2950

SIGNATURES	DATE
DRAWN P. UPSTILL	12.18.13
CHECKED M. O'BRIEN	12.18.13
SUBMITTED: ARCHITECT OF RECORD W. NICKEL	12/18/13
ST of LICENSURE: FL LICENSE NO: 68638	
APPROVED: S. KOLLER	12/18/13
K. MILLER	12/19/13

NATIONAL AERONAUTICS AND SPACE ADMINISTRATION
JOHN F. KENNEDY SPACE CENTER, NASA
KENNEDY SPACE CENTER, FLORIDA

KSC CENTRAL CAMPUS
REPLACEMENT HEADQUARTERS BUILDING
PHASE 1
VOL. 1 OF 4

CIVIL DETAILS

FILE NO.	SIZE	DWG. NO.
C-12070.00	F	79K39622 VOL 1

PCN. NO. 98745.1a — SHEET 75

C204

KSC FORM 1-11 (3/76)(C/G 3/94)

NOTICE: When Government drawings, specifications, or other data are used for any purpose other than in connection with a definitely related Government procurement operation, the United States Government thereby incurs no responsibility nor obligation whatsoever; and the fact that the Government may have formulated, furnished, or in any way supplied the said drawings, specifications or other data is not to be regarded by implication or otherwise as in any manner licensing the holder or any other person or corporation, or conveying any rights or permission to manufacture, use, or sell any patented invention that may in any way be related thereto.

NOTES

A. CONCRETE EXPANSION JOINT TYPE 1. SEE DETAIL 1/C204

B. CONCRETE EXPANSION JOINT TYPE 2. SEE DETAIL 2/C204

C. ALL OTHER CONCRETE JOINTS SHALL BE SAW-CUT CONTRACTION JOINTS. SEE DETAIL 3/C204

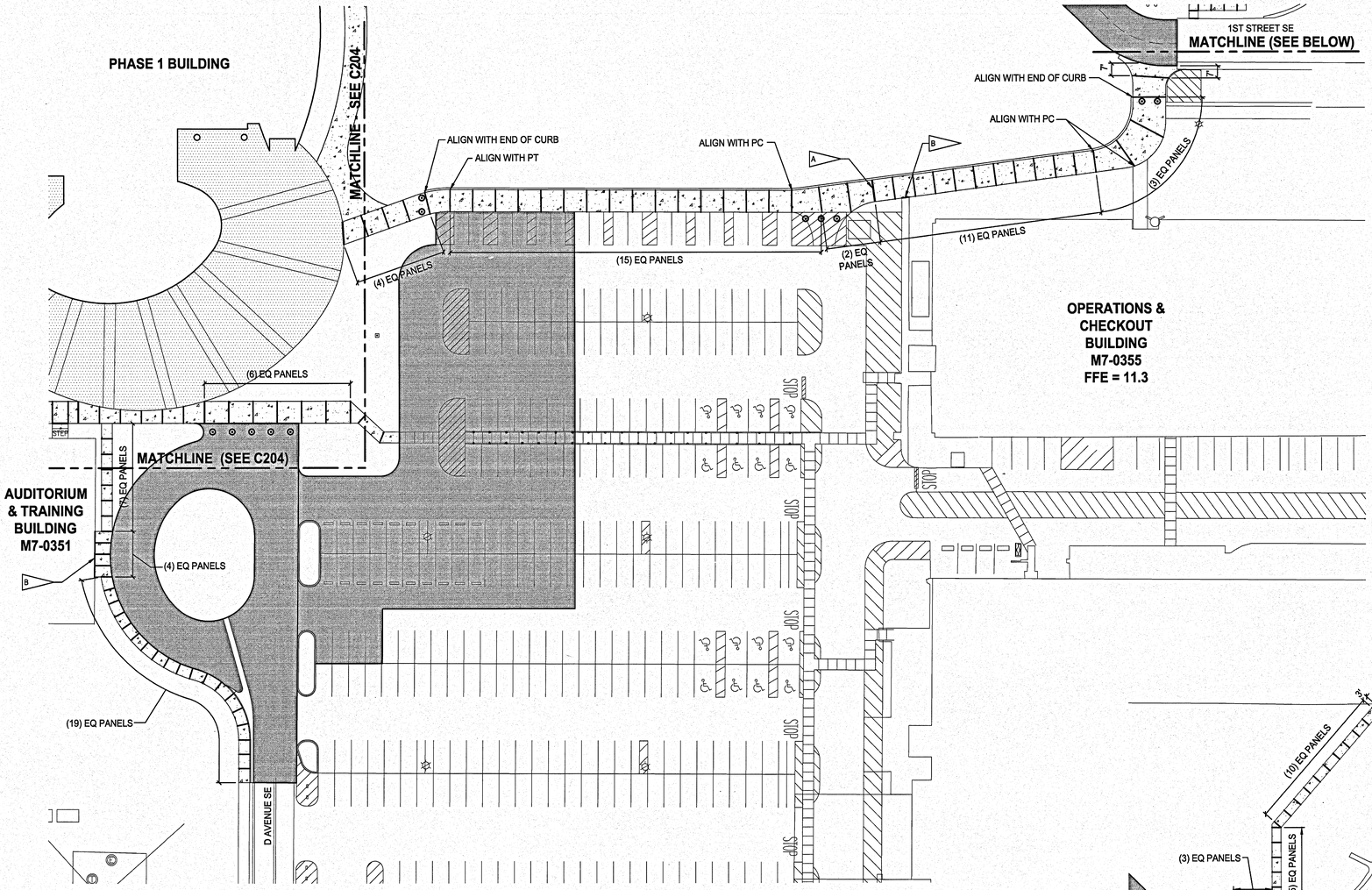

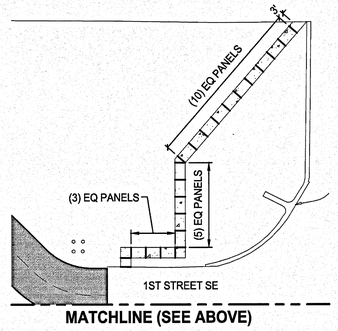

CONCRETE JOINT DETAIL 1/C101
1"=30'

GRAPHIC SCALE
0 15 30 60 90
SCALE IN FEET
1"=30'

N

SYM	ZONE		DATE	APPROVED

REVISIONS

JONES EDMUNDS
730 NE WALDO ROAD, GAINESVILLE, FLORIDA 32641 / (352) 377-5821
3910 S WASHINGTON AVE, SUITE 210, TITUSVILLE, FLORIDA 32780 / (321) 269-2950

SIGNATURES	DATE
DRAWN P. UPSTILL	12.18.13
CHECKED M. O'BRIEN	12.18.13
SUBMITTED: ARCHIVING OF RECORD W. NICKEL	12/18/13
ST of LICENSURE: FL LICENSE NO: 68638	
APPROVED ENGINEER K. MILLER	12/18/13

NATIONAL AERONAUTICS AND SPACE ADMINISTRATION
JOHN F. KENNEDY SPACE CENTER, NASA
KENNEDY SPACE CENTER, FLORIDA

KSC CENTRAL CAMPUS
REPLACEMENT HEADQUARTERS BUILDING
PHASE 1
VOL. 1 OF 4

CIVIL DETAILS

C205

FILE NO.	SIZE	DWG. NO.
C-12070.00	F	79K39622 VOL 1

PCN. NO. 98745.1a SHEET 76

FILE: \\jecost\projects\KSC Central Campus HQ\01-Central Campus HQ\01-Contract Drawings\Civil\VOL1\C205.dwg PRINTED: 12/18/2013 8:32 AM BY USER: Paul Upstill LAST MODIFIED: 12/18/2013 10:26 AM BY USER: paul

NOTICE: When Government drawings, specifications, or other data are used for any purpose other than in connection with a definitely related Government procurement operation, the United States Government thereby incurs no responsibility nor obligation whatsoever; and the fact that the Government may have formulated, furnished, or in any way supplied the said drawings, specifications or other data is not to be regarded by implication or otherwise as in any manner licensing the holder or any other person or corporation, or conveying any rights or permission to manufacture, use, or sell any patented invention that may in any way be related thereto.

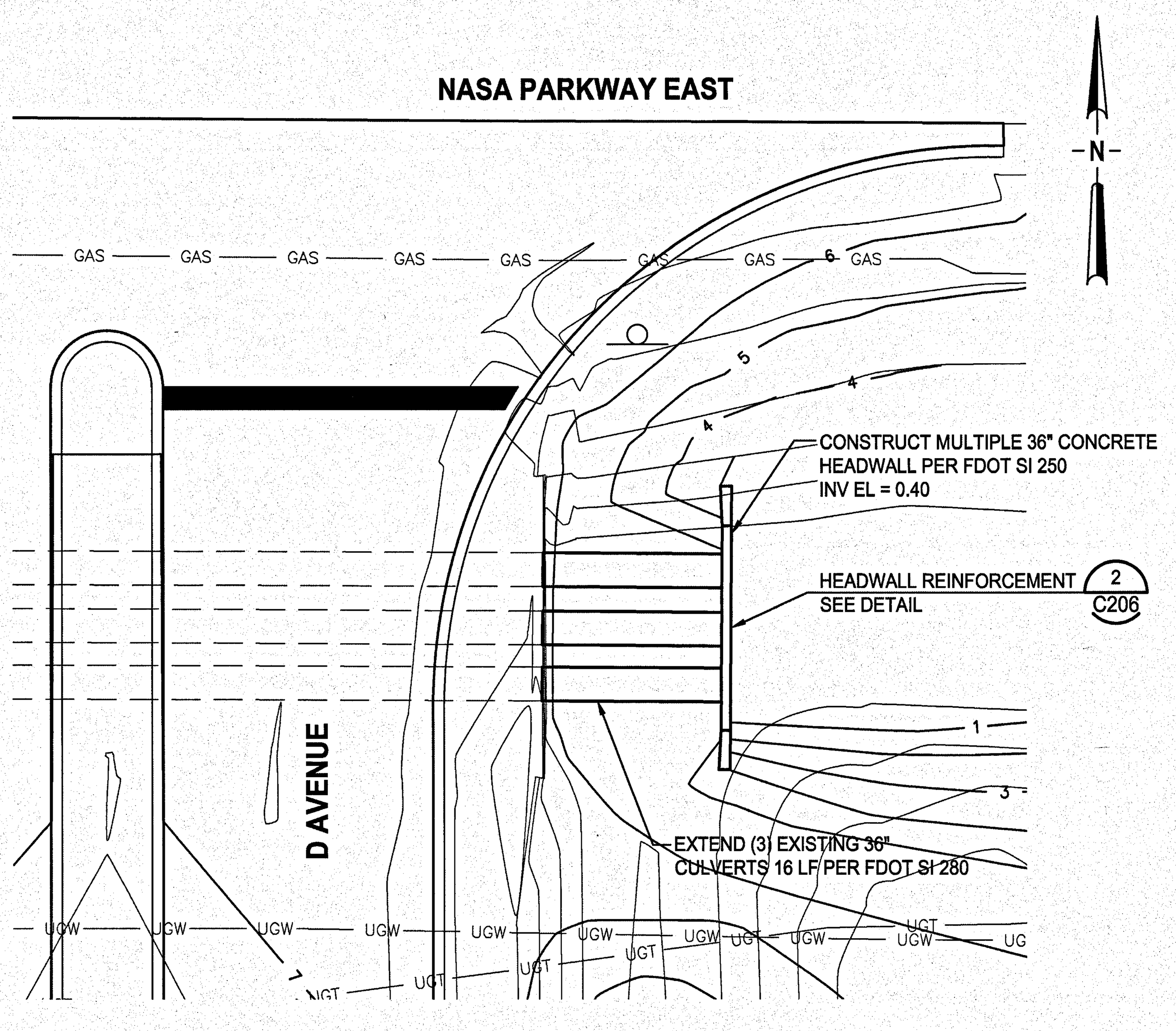

CULVERT EXTENSION AND HEADWALL DETAIL (1 / C132)

1"=10'

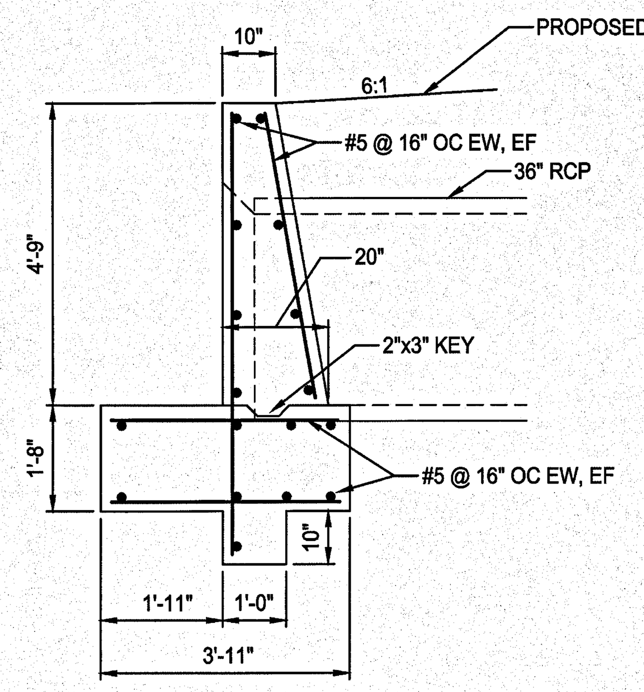

SECTION 1-1

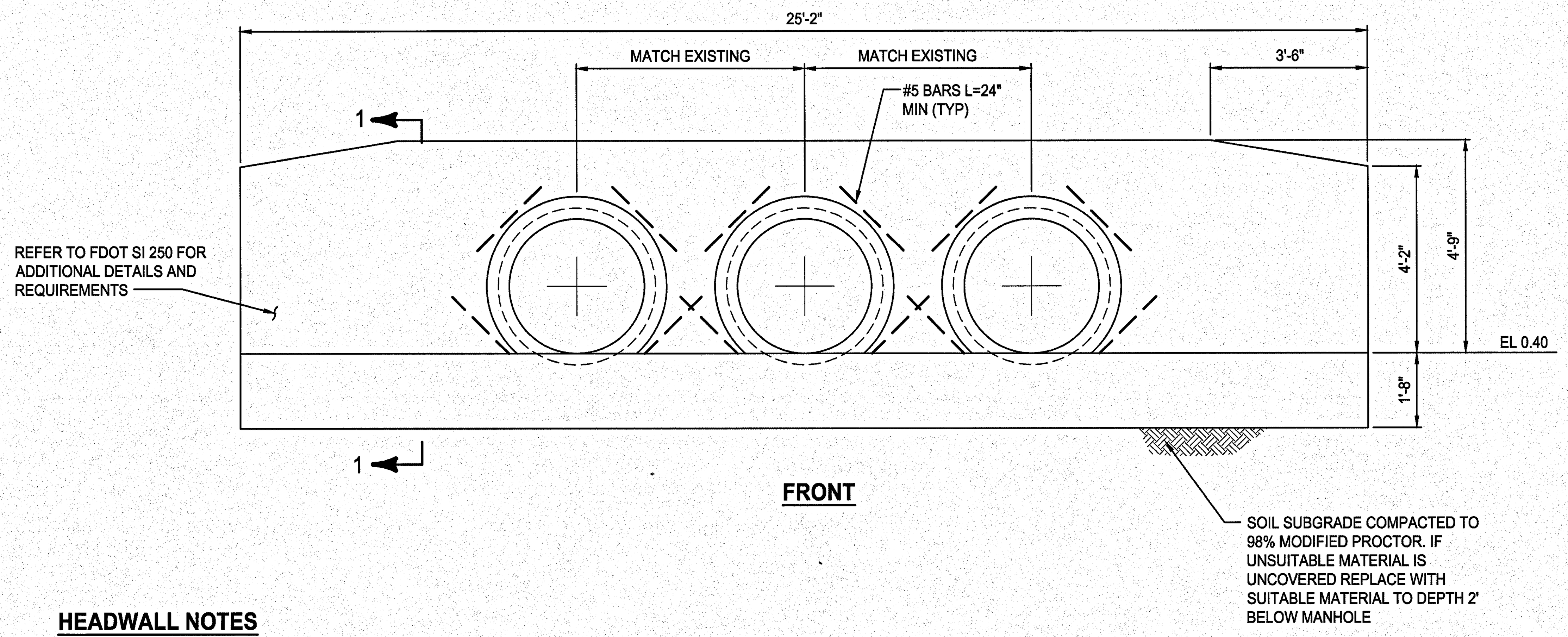

FRONT

HEADWALL NOTES

FOUNDATIONS

A. PREPARE SITE AND SUBGRADE BASED ON RECOMMENDATIONS OF THE REPORT OF GEOTECHNICAL CONSULTING SERVICES. EXCAVATE TO BOTTOM OF FOUNDATION AND COMPACT SOIL WITH HAND-HELD SOIL COMPACTER TO 95% PER ASTM D-1557 FOR MINIMUM 2'-0" BELOW EXCAVATION. PLACE CLEAN GRANULAR FILL IN 12 INCH LAYERS AND COMPACT TO A MINIMUM OF 95% OF THE MAXIMUM MODIFIED PROCTOR DRY DENSITY AS DETERMINED BY ASTM D-1557.

B. DEWATER, AS REQUIRED, SUCH THAT EXCAVATIONS ARE DRY AT THE TIME OF CONCRETE PLACEMENT. PIPING, LOSS OF FINES, AND SOIL HEAVE IS NOT PERMITTED. DAMAGE TO EXISTING ADJACENT STRUCTURES OR ROADWAYS IS NOT PERMITTED.

C. DESIGN SOIL BEARING STRENGTH:
C.1. 2000 PSF

REINFORCING STEEL

D. CONCRETE REINFORCEMENT STEEL INSTITUTE (CRSI) AND AMERICAN CONCRETE INSTITUTE (ACI) STANDARDS APPLY.

E. ALL DEFORMED BARS SHALL CONFORM TO ASTM A615, GRADE 60.

F. ALL WELDED WIRE FABRIC SHALL CONFORM TO ASTM A185.

G. ALL REINFORCING STEEL SHALL BE SUPPORTED IN STANDARD ACCESSORIES, HELD RIGIDLY AND ACCURATELY IN PLACE, AND PROTECTED AGAINST DISPLACEMENT BEFORE AND DURING PLACEMENT OF CONCRETE.

H. REINFORCEMENT CHAIR LEGS THAT REST ON CONCRETE SURFACES THAT WILL BE EXPOSED IN THE FINISHED STRUCTURE SHALL BE FABRICATED OF STAINLESS STEEL OR SHALL BE PLASTIC COATED.

J. WHERE SPLICE LENGTHS ARE NOT SPECIFIED, USE 50 BAR DIAMETERS.

CONCRETE

K. THE LATEST EDITION OF THE FOLLOWING ACI STANDARDS APPLY:

ACI 318 (CODE)	ACI 304 (PLACING)
ACI 306 (WINTER CONCRETE)	ACI 315 (DETAILING)
ACI 305 (HOT WEATHER CONCRETE)	ACI 347 (FORM WORK)
ACI 211.1 (MIX PROPORTIONING)	ACI 301

L. THE REQUIRED CONCRETE STRENGTH BASED ON AN AGE OF 28 DAYS FOR ELEMENTS IN THE STRUCTURE SHALL NOT BE LESS THAN 3000 PSI.

M. CONSOLIDATE ALL CONCRETE USING MECHANICAL VIBRATING EQUIPMENT.

N. DO NOT PLACE CONCRETE DURING RAIN OR IF RAIN IS LIKELY TO OCCUR PRIOR TO CONCRETE HARDENING.

P. EPOXY ADHESIVE FOR ANCHOR BOLTS SHALL CONFORM TO ASTM C579 AND ASTM C307 AND SHALL BE MADE BY "RED HEAD" OR APPROVED EQUAL WITH ENGINEER'S APPROVAL. "RED HEAD" EPCON C6 EPOXY ADHESIVE SHALL BE SELECTED.

R. CLEAR COVER FOR REINFORCING BARS, UNLESS OTHERWISE NOTED, SHALL BE:
R.1. CAST AGAINST EARTH 3" UNO
R.2. CONCRETE EXPOSED TO WEATHER 2" UNO

S. ALL REINFORCING LAPS, UNLESS NOTED OTHERWISE, SHALL CONFORM CONFORM ACI 318 CHAPTER 12 TENSION LAP REQUIREMENTS.

T. UNO REINFORCEMENT REBARS OF SLAB ON GRADE FOR SINGLE-LAYER REINFORCEMENT ON TOP SHALL BE PLACED AT ONE-THIRD OF SLAB DEPTH FROM TOP OF SLAB. FOR DOUBLE-LAYERS REINFORCEMENT OF SLAB ON GRADE, TOP REINFORCEMENT SHALL BE PLACED WITH 2 INCHES CLEAR COVER FROM TOP OF SLAB AND 3 INCHES CLEAR COVER FROM BOTTOM OF SLAB.

U. REINFORCING BENDS, UNLESS NOTED OTHERWISE, SHALL BE A 90° STANDARD HOOK AS DEFINED IN ACI 318.

V. UNLESS OTHERWISE NOTED, ALL WALL REINFORCEMENT BARS SHALL BE CONTINUOUS AROUND CORNERS. REINFORCEMENT SHALL BE EXTENDED INTO CONNECTING WALLS AND LAPPED ON THE OPPOSITE FACE OF THE CONNECTING WALL.

W. PROVIDE 3/4" CHAMFER ON ALL EXPOSED EDGES OF CONCRETE.

Y. ALL REBAR SHALL HAVE 3" MINIMUM COVER.

HEADWALL REINFORCING DETAIL (2 / C206)

1"=10'

GRAPHIC SCALE
0 5 10 20 30
SCALE IN FEET
1" = 10'

SYM	ZONE		DATE	APPROVED

REVISIONS

JONES EDMUNDS
730 NE WALDO ROAD, GAINESVILLE, FLORIDA 32641 / (352) 377-5821
3910 S WASHINGTON AVE, SUITE 210, TITUSVILLE, FLORIDA 32780 / (321) 269-2950

SIGNATURES	DATE
DRAWN P. UPSTILL	12.18.13
CHECKED M. O'BRIEN	12.18.13
SUBMITTED: ARCH/ENG OF RECORD W. NICKEL	12/18/13
ST of LICENSURE: FL LICENSE NO: 68638	
APPROVED R. KOLLER	12/18/13
K. MILLER	12/19/13

NATIONAL AERONAUTICS AND SPACE ADMINISTRATION
JOHN F. KENNEDY SPACE CENTER, NASA
KENNEDY SPACE CENTER, FLORIDA

KSC CENTRAL CAMPUS
REPLACEMENT HEADQUARTERS BUILDING
PHASE 1
VOL. 1 OF 4

CIVIL DETAILS

C206

FILE NO.	SIZE	DWG. NO.
C-12070.00	F	79K39622 VOL 1

PCN. NO. 98745.1a

KSC FORM 1-11 (3/76)(C/G 3/94)

NOTICE: When Government drawings, specifications, or other data are used for any purpose other than in connection with a definitely related Government procurement operation, the United States Government thereby incurs no responsibility nor obligation whatsoever; and the fact that the Government may have formulated, furnished, or in any way supplied the said drawings, specifications or other data is not to be regarded by implication or otherwise as in any manner licensing the holder or any other person or corporation, or conveying any rights or permission to manufacture, use, or sell any patented invention that may in any way be related thereto.

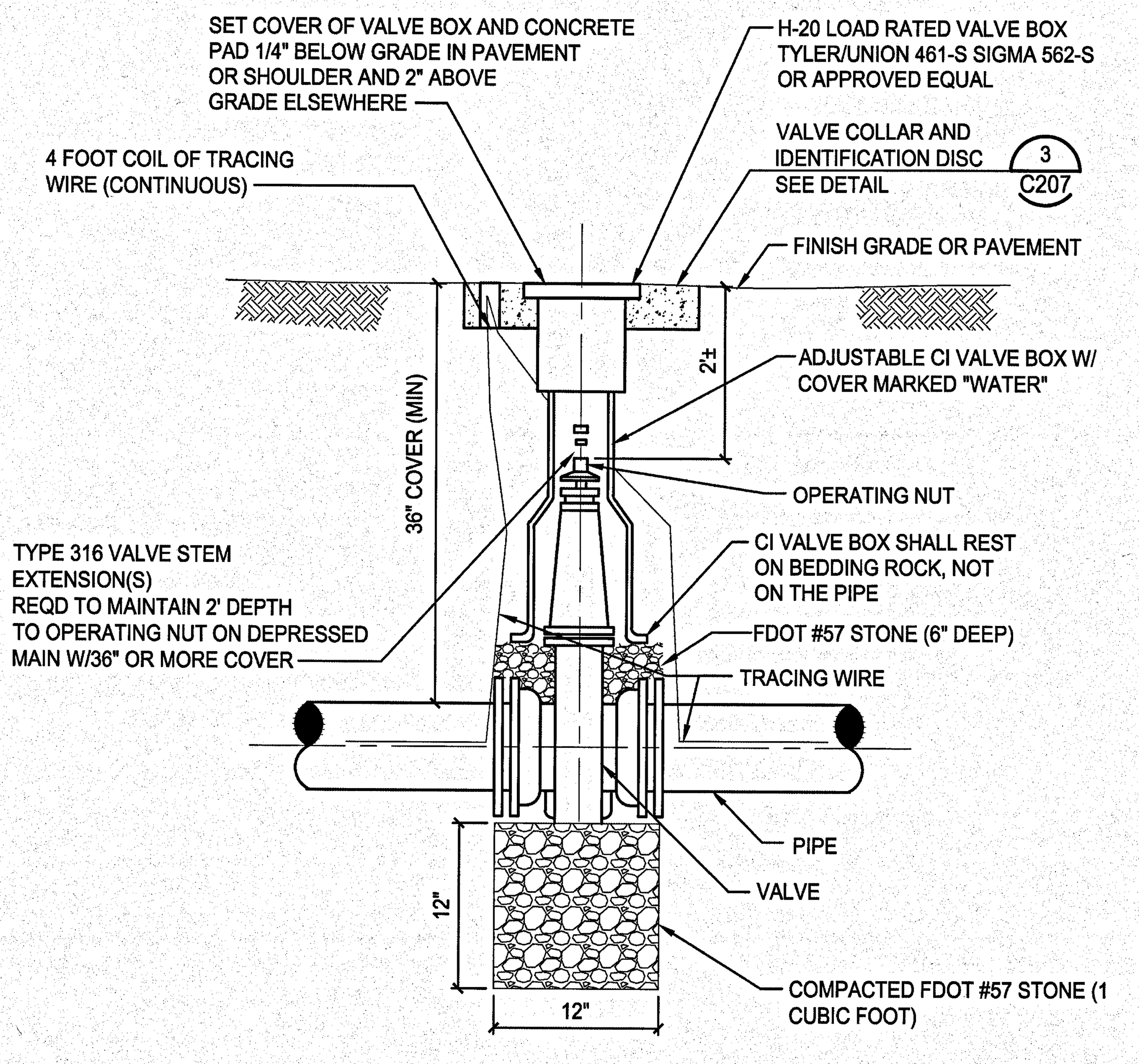

GATE VALVE BOX DETAIL 1
NTS C208

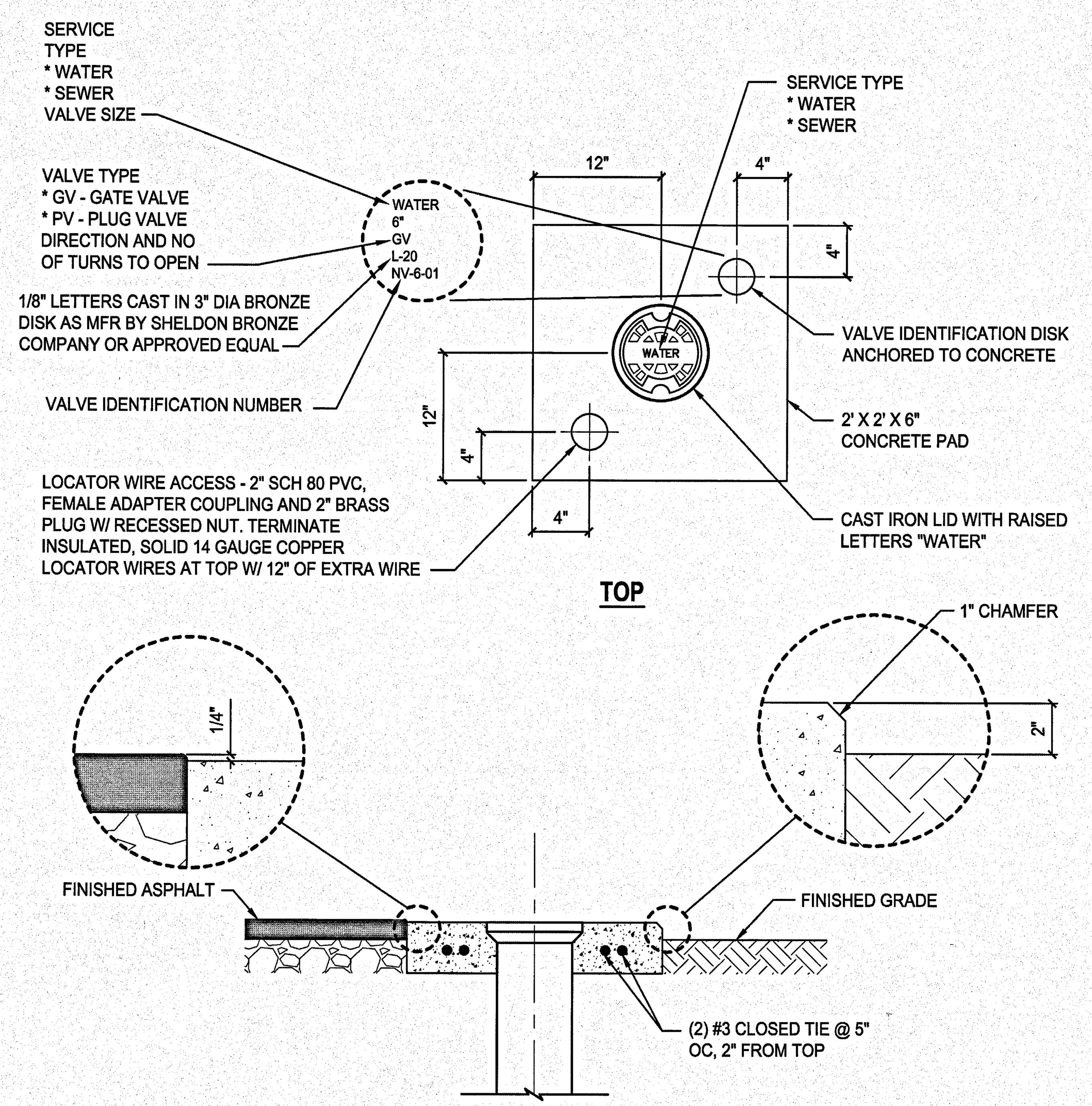

NOTES:
A. PROVIDE EMBOSSED SS TAG SECURED TO VALVE BODY W/ SS AIRCRAFT CABLE CONTAINING DUPLICATE INFORMATION SHOWN ON IDENTIFICATION DISC.
B. IDENTIFICATION DISK IS SHOWN AS AN EXAMPLE. CONTRACTOR SHALL INSTALL DISK WITH INFORMATION SPECIFIC TO EACH VALVE.

WATER VALVE COLLAR AND IDENTIFICATION DISK DETAIL 3
NTS

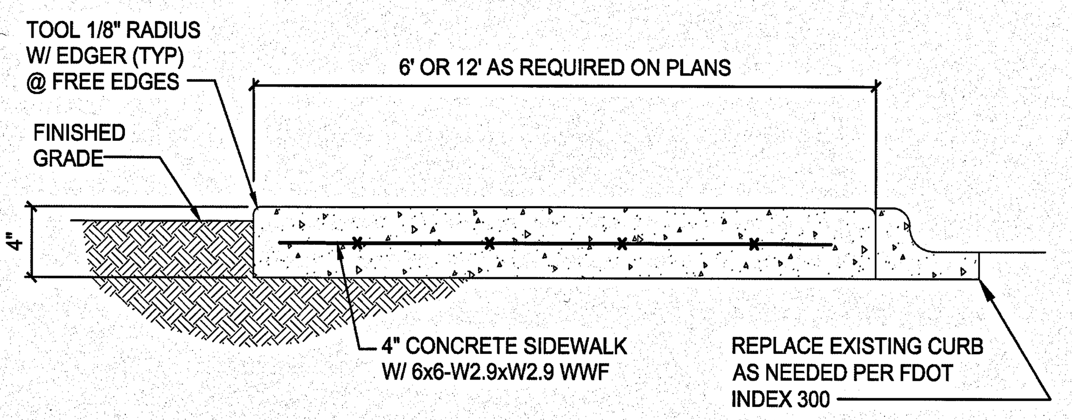

NOTES:
A. TOOL JOINTS SHALL BE LOCATED 5' APART ALONG THE LENGTH OF THE SIDEWALK.
B. CONTROL JOINTS SHALL BE LOCATED AT 10' SPACING ALONG THE LENGTH OF THE SIDEWALK. CONTROL JOINTS SHALL INCLUDE THE CONSTRUCTION OF 1/2" WIDE EXPANSION JOINT MATERIAL FOR THE DEPTH AND WIDTH OF THE SIDEWALK.
C. MATCH EXISTING SIDEWALK DEPTH, WIDTH, JOINT AND CONTROL JOINT LOCATIONS AS REQUIRED.

CONCRETE SIDEWALK RESTORATION DETAIL 5
NTS

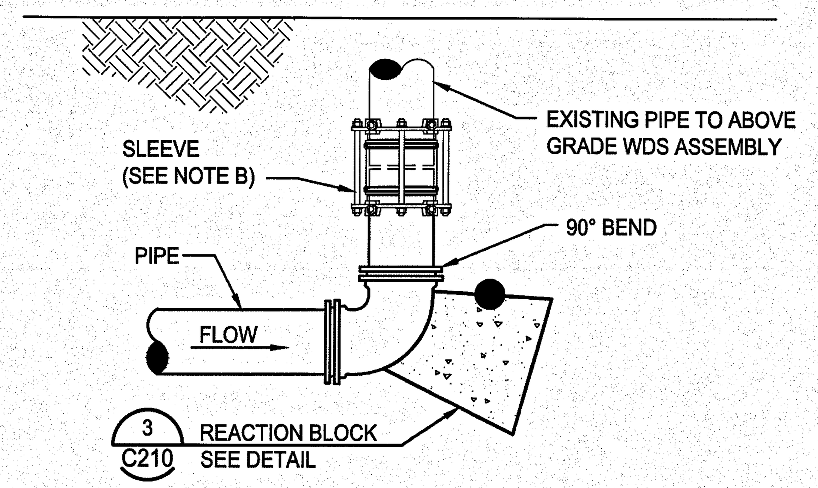

TYPICAL SECTION

NOTES:
A. IF CAP NOT SHOWN ON DRAWINGS, EXISTING PIPE TO BE CAPPED WITHIN 5 FEET OF NEW CONNECTION LOCATION.
B. IF INSUFFICIENT SPACE EXISTS FOR VERTICAL CONNECTION AS SHOWN, CONTRACTOR MAY INSTALL SLEEVE ALONG THE HORIZONTAL LEG OF PIPE, WITH THE CONTRACTING OFFICER APPROVAL.
C. FITTINGS SHALL BE RMJ FOR DI PIPE, AND SWJ FOR SCH 90 PVC PIPE.
D. REACTION BLOCK NOT REQUIRED FOR PIPES SMALLER THAN 4".

ASSEMBLY CONNECTION DETAIL 7
NTS C145

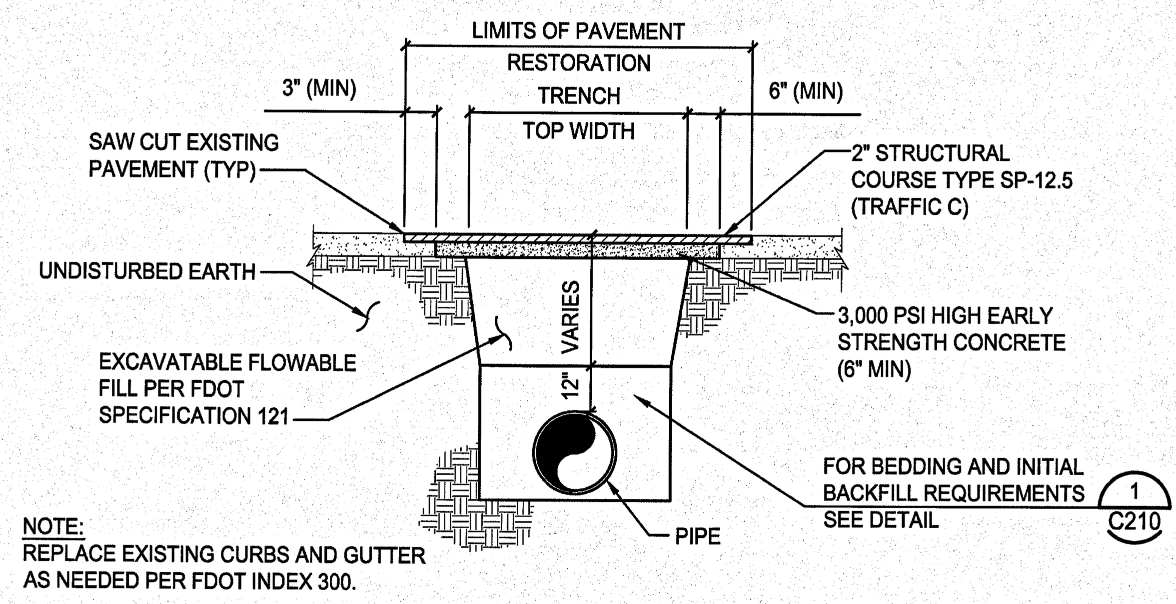

NOTE:
REPLACE EXISTING CURBS AND GUTTER AS NEEDED PER FDOT INDEX 300.

ASPHALT PAVEMENT RESTORATION DETAIL 2
NTS

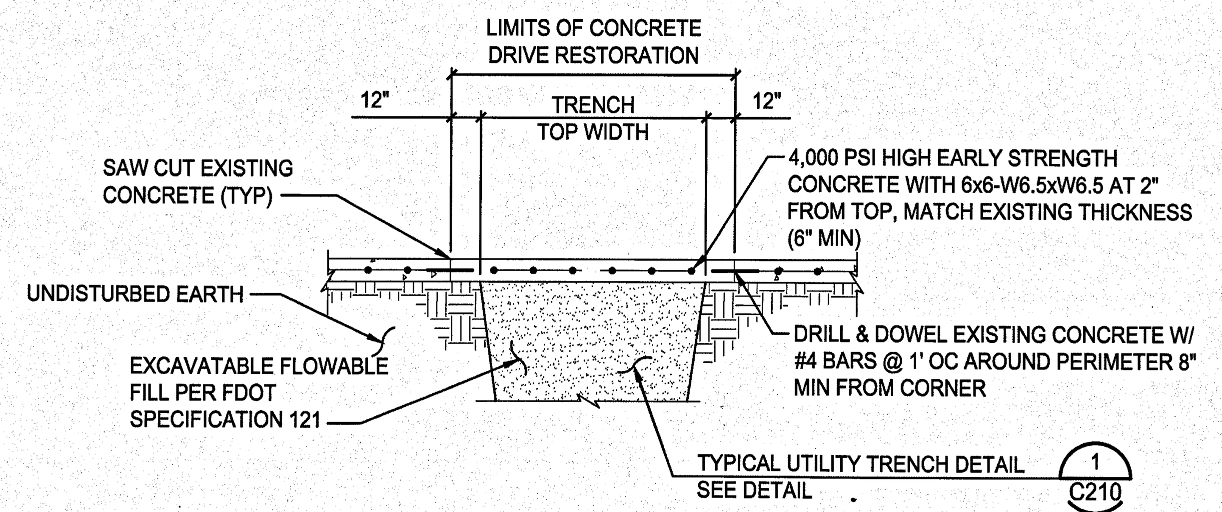

NOTES:
A. DRILL AND DOWEL 1 LOCATION EACH SIDE FOR CURB REPAIR.
B. MATCH EXISTING GRADE AND FINISH.
C. REPLACE EXISTING CURBS AS NEEDED PER FDOT INDEX 300.
D. WATER TO CEMENT RATIO SHALL NOT EXCEED 0.45
E. PLACE CONTRACTION JOINTS @12' OC (MAX)
F. CONCRETE SHALL BE CURED MOIST, BY SPRAYING OR FOGGING, FOR FIRST 48 HOURS (MIN)

CONCRETE RESTORATION DETAIL 4
NTS C144

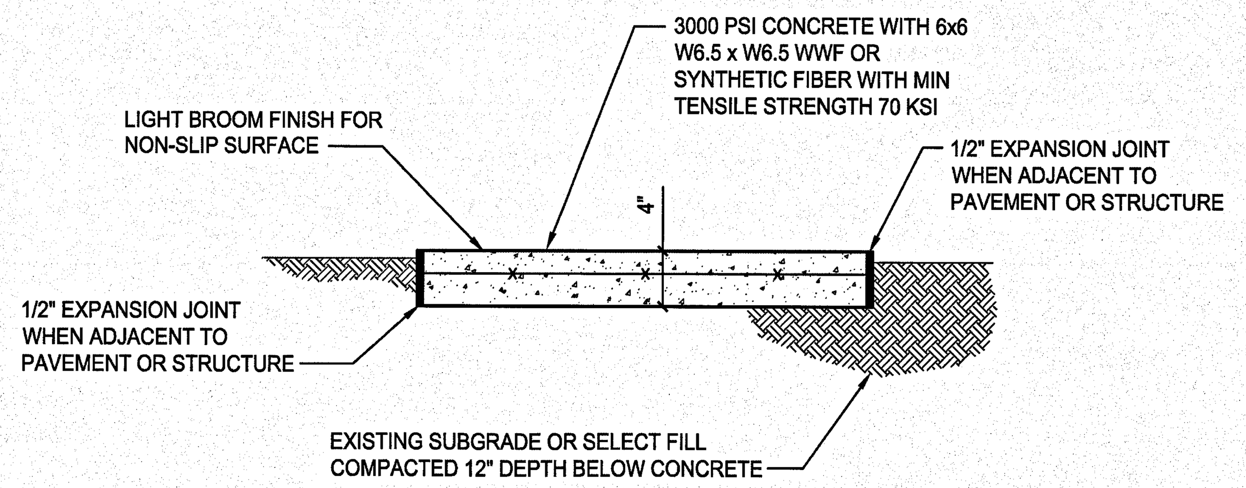

TYPICAL CONCRETE SIDEWALK DETAIL 6
NTS

SYM	ZONE	REVISIONS	DATE	APPROVED

JONES EDMUNDS
730 NE WALDO ROAD, GAINESVILLE, FLORIDA 32641 / (352) 377-5821
3910 S WASHINGTON AVE, SUITE 210, TITUSVILLE, FLORIDA 32780 / (321) 269-2950

SIGNATURES	DATE
DRAWN P. UPSTILL	12.18.13
CHECKED M. O'BRIEN	12.18.13
SUBMITTED, ARCHITECT OF RECORD W. NICKEL	12/18/13
ST of LICENSURE: FL LICENSE NO: 68638	
APPROVED	12/18/13
K. MILLER	12/19/13

NATIONAL AERONAUTICS AND SPACE ADMINISTRATION
JOHN F. KENNEDY SPACE CENTER, NASA
KENNEDY SPACE CENTER, FLORIDA

KSC CENTRAL CAMPUS
REPLACEMENT HEADQUARTERS BUILDING
PHASE 1
VOL. 1 OF 4

CIVIL DETAILS

C207

FILE NO.	SIZE	DWG. NO.
C-12070.00	F	79K39622 VOL 1

PCN. NO. 98745.1a
SHEET 78

KSC FORM 1-11 (3/78)(C/G 3/94)

NOTICE: When Government drawings, specifications, or other data are used for any purpose other than in connection with a definitely related Government procurement operation, the United States Government thereby incurs no responsibility nor obligation whatsoever; and the fact that the Government may have formulated, furnished, or in any way supplied the said drawings, specifications or other data is not to be regarded by implication or otherwise as in any manner licensing the holder or any other person or corporation, or conveying any rights or permission to manufacture, use, or sell any patented invention that may in any way be related thereto.

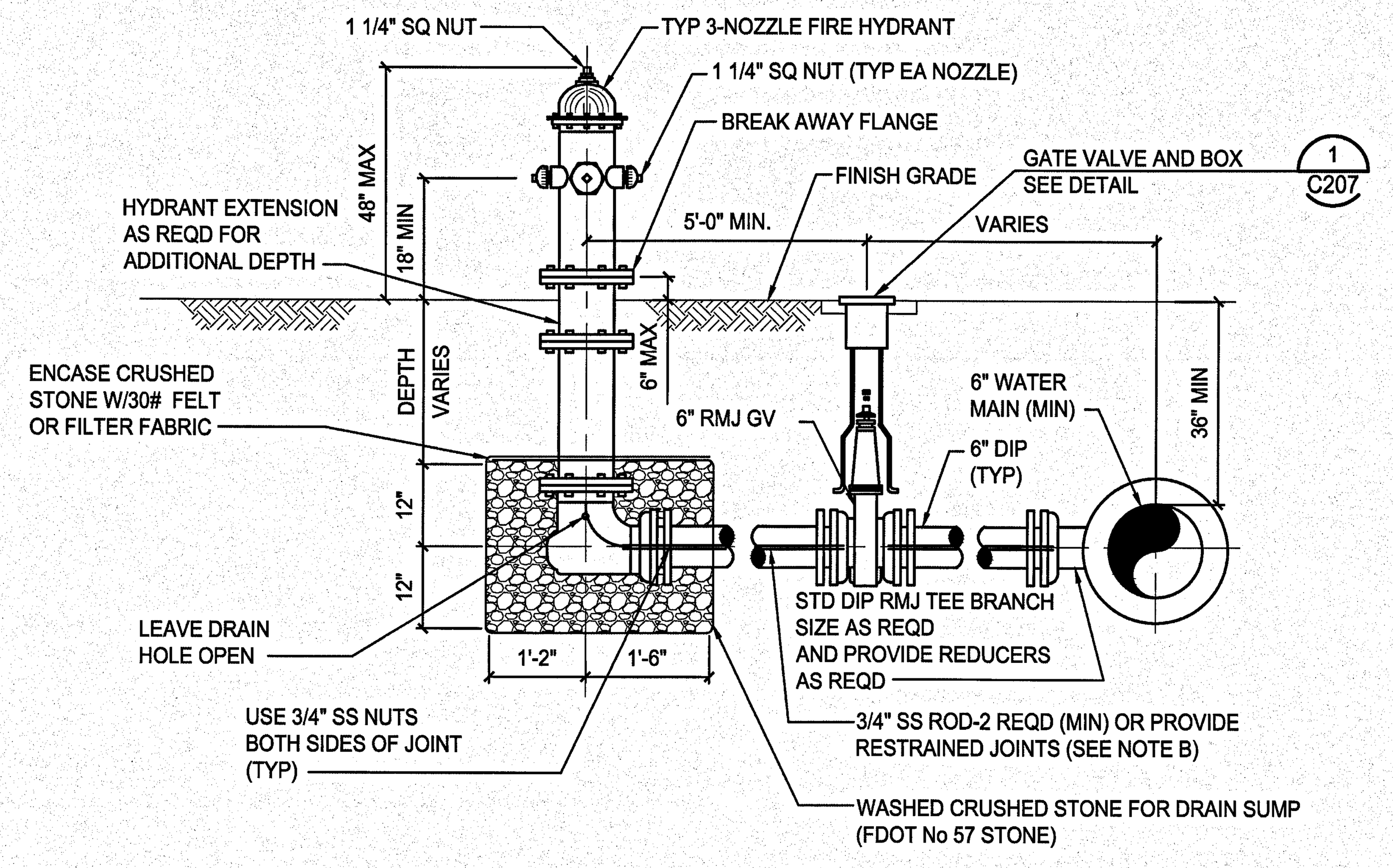

NOTES:

A. FIRE HYDRANT INSTALLATION SHALL BE IN ACCORDANCE WITH NASA-STD 8719.11A SECTION 5.3.2

B. 3/4" STAINLESS STEEL ROD CUT AND THREADED AS REQUIRED, OR PROVIDE RESTRAINED JOINTS.

C. FIRE HYDRANTS SHALL BE INSTALLED BETWEEN 3' AND 7' FROM EDGE OF PAVEMENT.

D. TIE RODS, NUTS, WASHERS AND OTHER FASTENERS SHALL BE GALVANIZED OR TYPE 316 STAINLESS STEEL.

E. 4 1/2" PUMPER NOZZLE TO BE PERPENDICULAR TO CENTERLINE OF MAJOR STREET.

F. FIRE HYDRANT ASSEMBLY INCLUDES ALL THAT IS SHOWN INCLUDING DI PIPE TO R/W, DIP TEE AT MAIN, HYDRANT, REDUCERS, VALVE, HYDRANT EXTENSIONS, VALVE EXTENSIONS, ALL PIPING AND MISCELLANEOUS APPURTENANCES REQUIRED FOR A COMPLETE INSTALLATION.

G. FOR FIRE HYDRANTS ALONG PAVED ROADWAYS, INSTALL RAISED PAVEMENT MARKER FOR FIRE HYDRANT IDENTIFICATION. MARKER SHALL BE BLUE AND IN ACCORDANCE WITH FDOT 706. MARKER SHALL BE LOCATED IN THE CENTER OF CLOSEST LANE PERPENDICULAR TO FIRE HYDRANT.

FIRE HYDRANT DETAIL 1
NTS

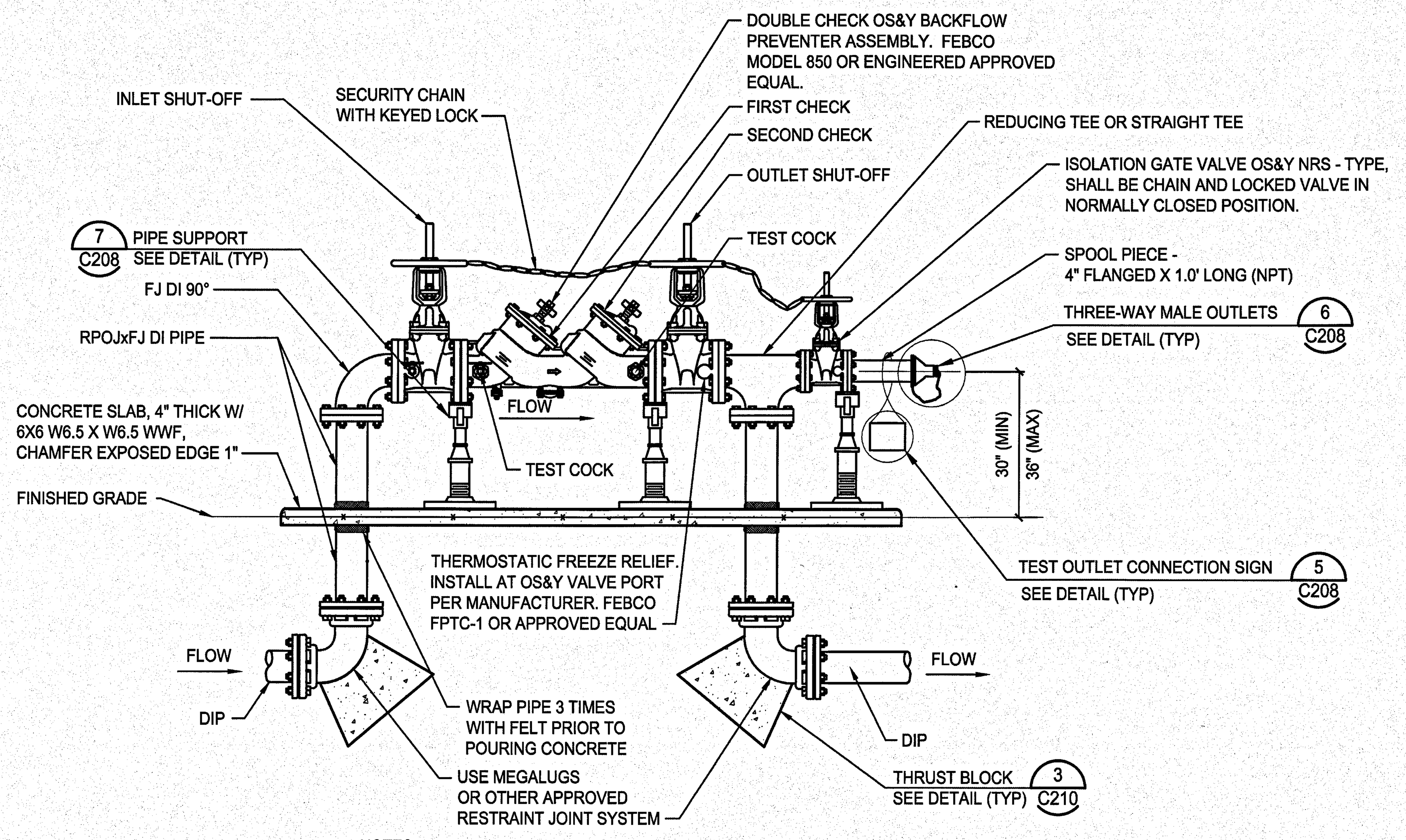

NOTES:

A. DEVICE TO BE INSTALLED IN STRICT ACCORDANCE WITH MANUFACTURER'S INSTRUCTIONS.

B. REFER TO KSC DWG NO 98K01375 FOR LATEST REVISIONS TO DETAIL.

C. BACKFLOW PREVENTER AND PIPING SHALL BE PAINTED RED.

12" DOUBLE CHECK VALVE BACKFLOW PREVENTER ASSEMBLY FOR FIRE SERVICE CONNECTION DETAIL 3
NTS C144

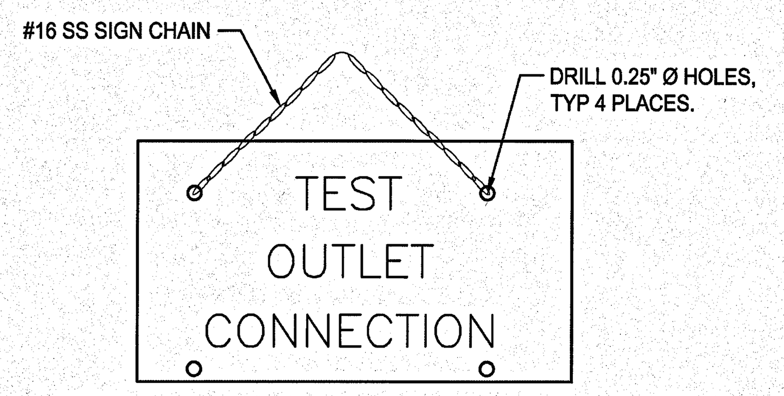

NOTE:
IDENTIFICATION PLATE - 4" x 8" BRASS PLATE, STAMPED WITH 3/8" LETTERING.

TEST OUTLET CONNECTION DETAIL 5
NTS C208

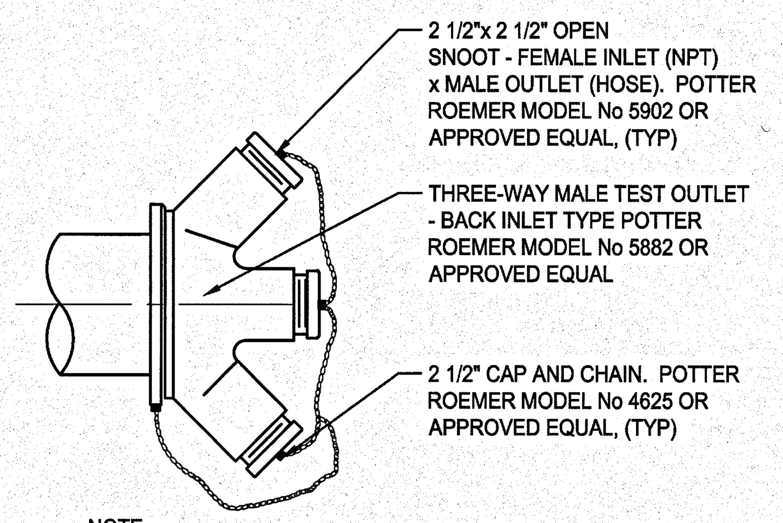

NOTE:
THIS CONNECTION (2 1/2" HOSE THREAD) SHALL BE USED TO ATTACH FIRE HOSE WITH AN APPROVED HOSE TESTING DEVICE SUCH AS HOSE MONSTER OR ENGINEERED APPROVED EQUAL.

THREE-WAY MALE OUTLETS DETAIL 6
NTS C208

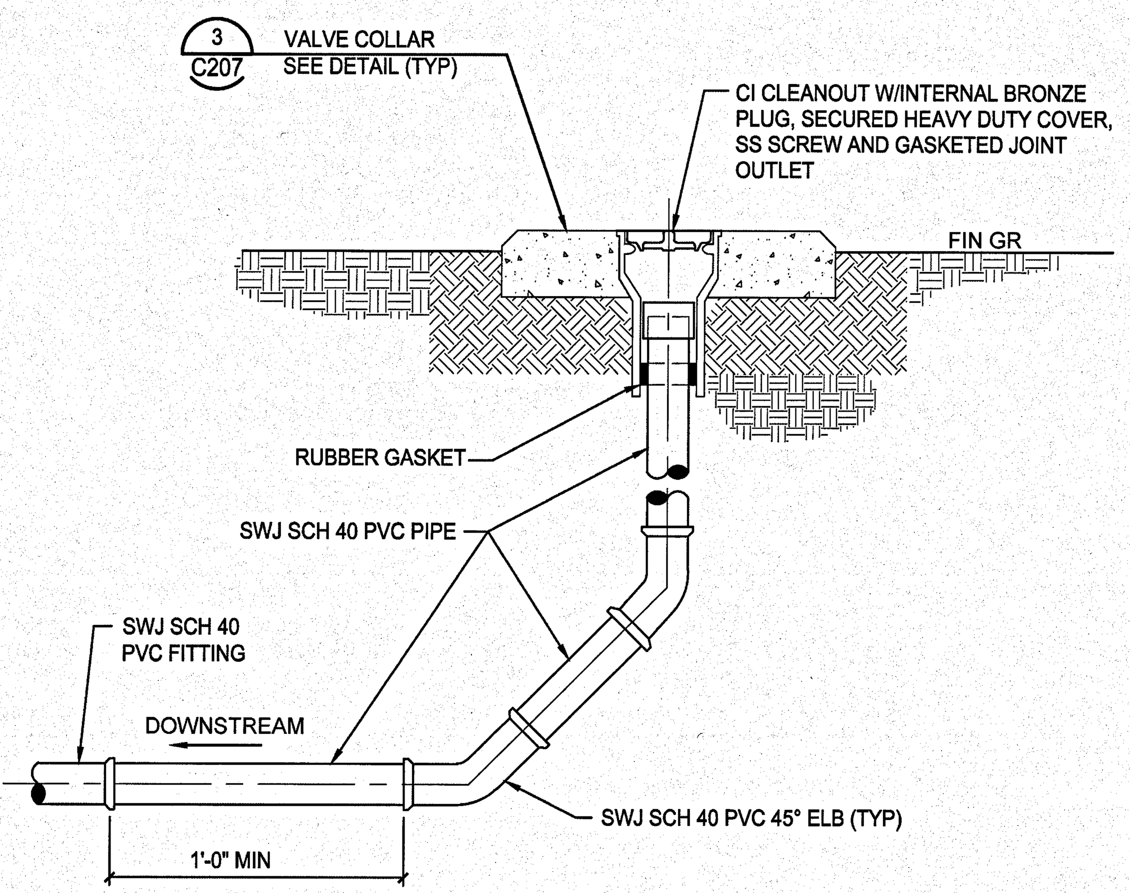

SECTION

CLEANOUT DETAIL 2
NTS

DIMENSIONS

PIPE SIZE	A	B	WT
	IN		LBS
2 1/2	37 3/16	22 1/16	178
3	41 11/16	25 9/16	213
4	50 7/16	32 5/16	360
6	59 11/16	38 9/16	601
8	69 3/16	46 1/16	892
10	84 3/16	58 1/16	1593

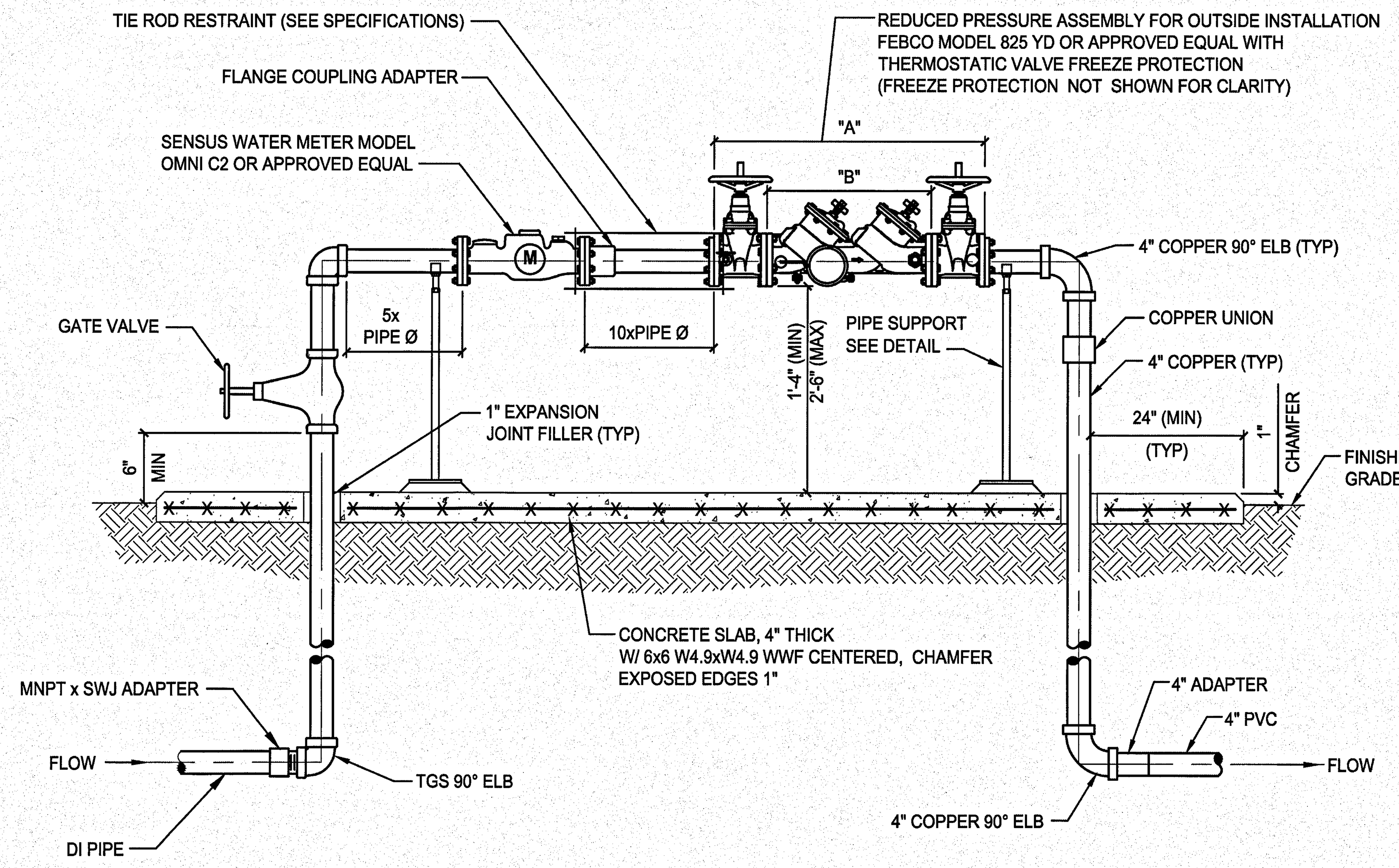

4" REDUCED PRESSURE BACKFLOW PREVENTER DETAIL 4
NTS

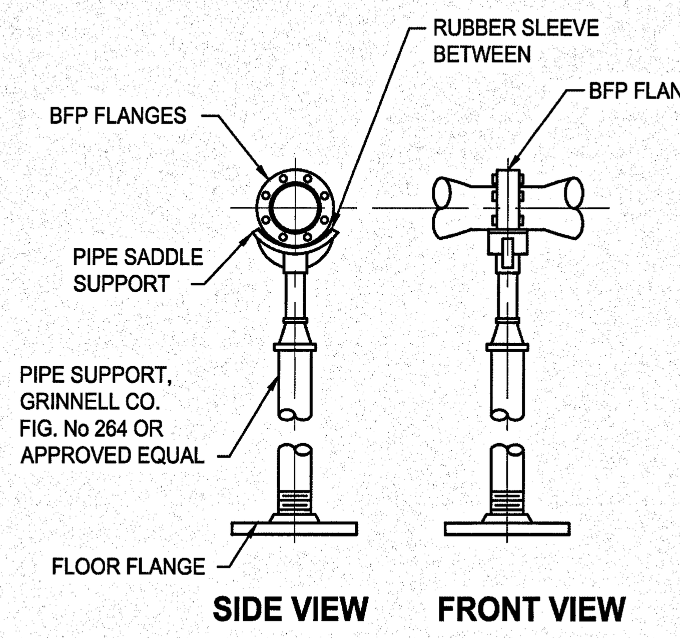

PIPE SUPPORT DETAIL 7
NTS C208

SYM	ZONE	REVISIONS	DATE	APPROVED

JONES EDMUNDS
730 NE WALDO ROAD, GAINESVILLE, FLORIDA 32641 / (352) 377-5821
3910 S WASHINGTON AVE, SUITE 210, TITUSVILLE, FLORIDA 32780 / (321) 269-2950

SIGNATURES	DATE
DRAWN P. UPSTILL	12.18.13
CHECKED M. O'BRIEN	12.18.13
SUBMITTED: ARCH/ENG OF RECORD W. NICKEL	12/18/13
ST of LICENSURE: FL LICENSE NO: 68638	
APPROVED R. KOLLER	12/18/13
K. MILLER	12/19/13

NATIONAL AERONAUTICS AND SPACE ADMINISTRATION
JOHN F. KENNEDY SPACE CENTER, NASA
KENNEDY SPACE CENTER, FLORIDA

KSC CENTRAL CAMPUS
REPLACEMENT HEADQUARTERS BUILDING
PHASE 1
VOL. 1 OF 4

CIVIL DETAILS

C208

FILE NO. C-12070.00 | SIZE F | DWG. NO. 79K39622 VOL 1

PCN. NO. 98745.1a | SHEET 79

NOTICE: When Government drawings, specifications, or other data are used for any purpose other than in connection with a definitely related Government procurement operation, the United States Government thereby incurs no responsibility nor obligation whatsoever; and the fact that the Government may have formulated, furnished, or in any way supplied the said drawings, specifications or other data is not to be regarded by implication or otherwise as in any manner licensing the holder or any other person or corporation, or conveying any rights or permission to manufacture, use, or sell any patented invention that may in any way be related thereto.

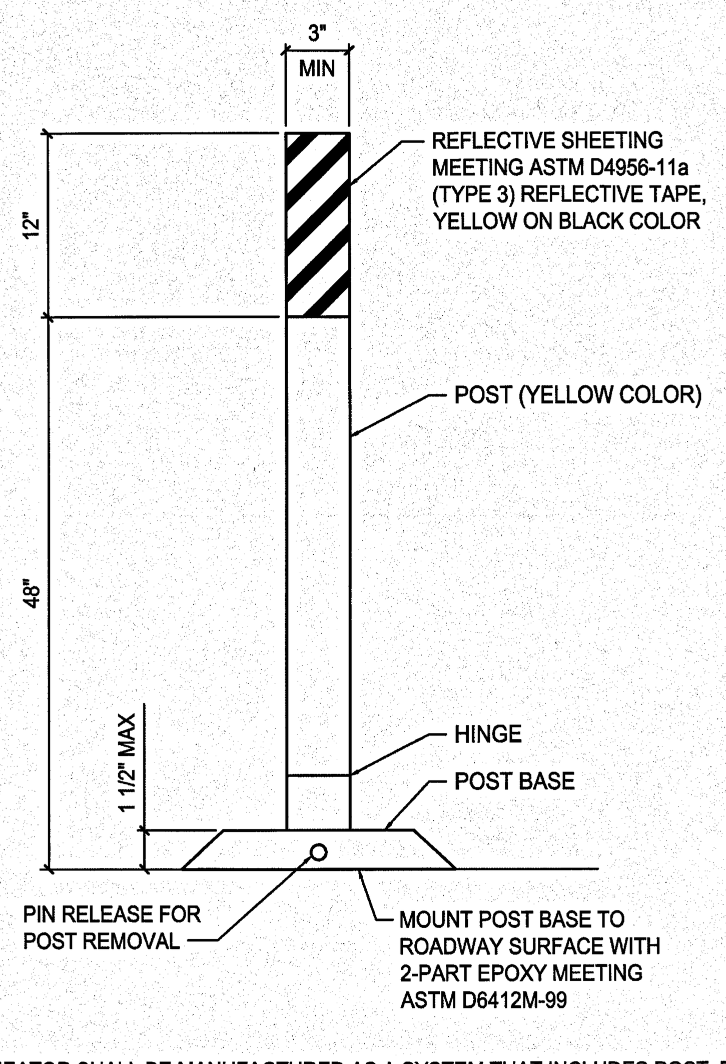

NOTE:
POST DELINEATOR SHALL BE MANUFACTURED AS A SYSTEM THAT INCLUDES POST, POST BASE, AND ALL CONNECTING HARDWARE. ACCEPTABLE MANUFACTURERS INCLUDE FLEXSTAKE (SM700 SERIES) AND GREENLINE (SMD SERIES), OR APPROVED EQUAL.

FLEXIBLE/REMOVABLE POST DELINEATOR DETAIL 1 NTS C117

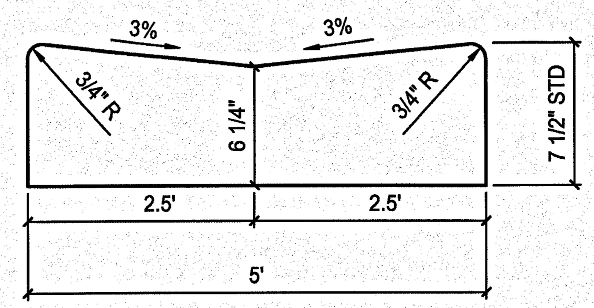

CONCRETE VALLEY GUTTER DETAIL 2 NTS

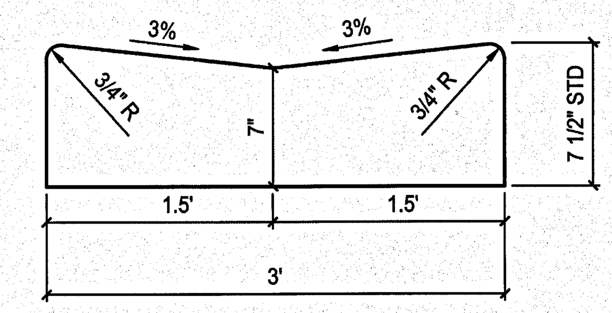

CONCRETE VALLEY GUTTER DETAIL 3 NTS

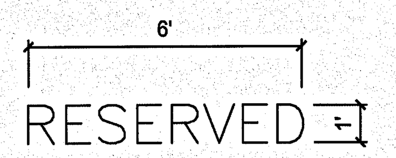

PAVEMENT MARKING DETAIL 5 NTS C115

NOTES

- A "RESERVED", (70) WHITE PAINT PAVEMENT MARKING. SEE DETAIL 5 C209
- B SIGN (DIRECTOR) (1). (SEE WAYFINDING DRAWINGS)
- C SIGN (ELECTRIC VEHICLES) (14). (SEE WAYFINDING DRAWINGS)
- D SIGN (FUEL EFFICIENT VEHICLES) (8). (SEE WAYFINDING DRAWINGS)
- E SIGN (CAR POOL VEHICELS) (22). (SEE WAYFINDING DRAWINGS)
- F SIGN (GOVERNMENT SERVICE VEHICLES) (14). (SEE WAYFINDING DRAWINGS)

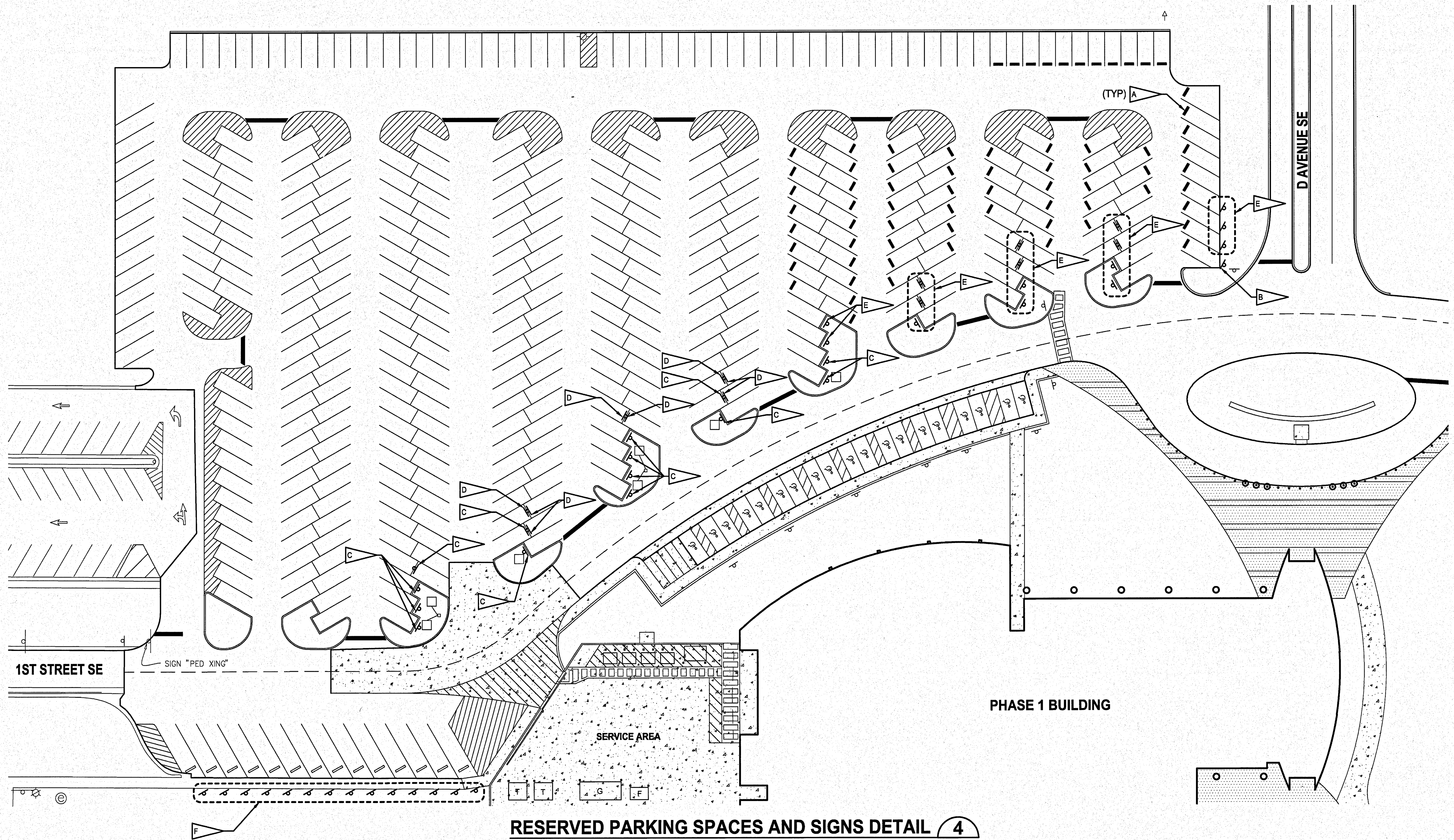

RESERVED PARKING SPACES AND SIGNS DETAIL 4 NTS C115

SYM	ZONE	REVISIONS	DATE	APPROVED

JONES EDMUNDS
730 NE WALDO ROAD, GAINESVILLE, FLORIDA 32641 / (352) 377-5821
3910 S WASHINGTON AVE, SUITE 210, TITUSVILLE, FLORIDA 32780 / (321) 269-2950

SIGNATURES	DATE
DRAWN P. UPSTILL	12.18.13
CHECKED M. O'BRIEN	12.18.13
SUBMITTED: ARCH/ENG OF RECORD W. NICKEL	12/18/13
ST of LICENSURE: FL LICENSE NO. 68638	
APPROVED R. KOLLER	12/18/13
K. MILLER	12/19/13

NATIONAL AERONAUTICS AND SPACE ADMINISTRATION
JOHN F. KENNEDY SPACE CENTER, NASA
KENNEDY SPACE CENTER, FLORIDA

KSC CENTRAL CAMPUS
REPLACEMENT HEADQUARTERS BUILDING
PHASE 1
VOL. 1 OF 4

CIVIL DETAILS

FILE NO.	SIZE	DWG. NO.
C-12070.00	F	79K39622 VOL 1

PCN. NO. 98745.1a

C209

KSC FORM 1-11 (3/76)(C/G 3/94)

NOTICE: When Government drawings, specifications, or other data are used for any purpose other than in connection with a definitely related Government procurement operation, the United States Government thereby incurs no responsibility nor obligation whatsoever; and the fact that the Government may have formulated, furnished, or in any way supplied the said drawings, specifications or other data is not to be regarded by implication or otherwise as in any manner licensing the holder or any other person or corporation, or conveying any rights or permission to manufacture, use, or sell any patented invention that may in any way be related thereto.

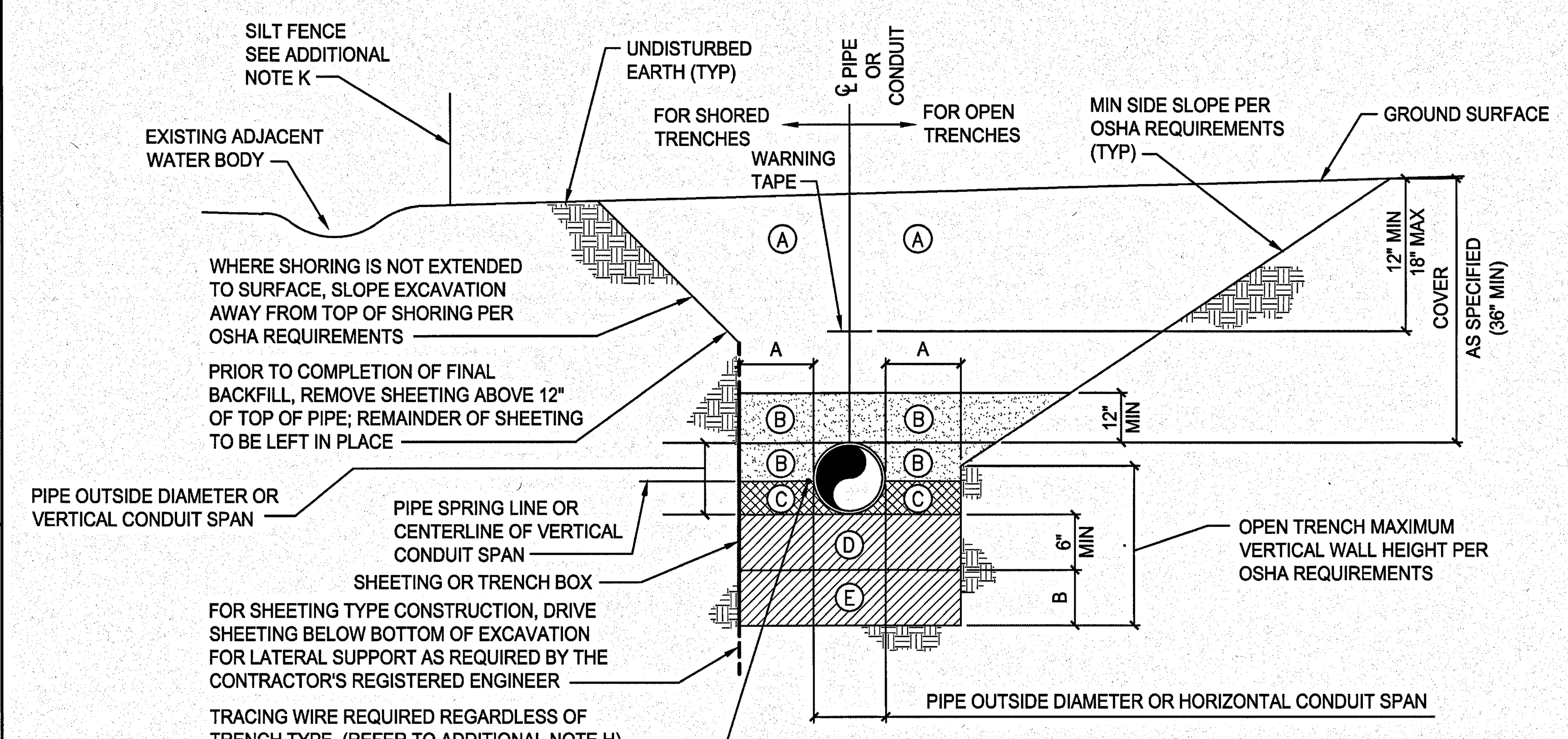

NOMINAL PIPE DIAMETER OR HORIZONTAL CONDUIT SPAN (INCHES)	MINIMUM SIDEWALL CLEARANCE	ADDITIONAL EXCAVATION DEPTH (1)
	A (INCHES)	B (INCHES)
LESS THAN 24	12	12

(1) REQUIRED WHERE UNSUITABLE MATERIAL IS ENCOUNTERED.

ZONE NO.	ZONE NAME	MATERIAL	COMPACTION
(A)	FINAL BACKFILL	AS SPECIFIED	AT LEAST 95% MODIFIED PROCTOR MAXIMUM DRY DENSITY ASTM D-1557
(B)	INITIAL BACKFILL		
(C)	HAUNCHING		
(D)	BEDDING		
(E)	FOUNDATION		

TRENCH ZONE NOTES:

A. FINAL BACKFILL SHALL BE INSTALLED IN LIFTS NOT EXCEEDING 6 INCHES, LOOSE MEASUREMENT. REFER TO ADDITIONAL NOTE H.

B. INITIAL BACKFILL SHALL BE INSTALLED IN LIFTS NOT EXCEEDING 6 INCHES, LOOSE MEASUREMENT. ALL LIFTS SHALL BE COMPACTED BY HAND TAMPING OR AN APPROVED METHOD OF MECHANICAL TAMPING. REFER TO ADDITIONAL NOTE H.

C. HAUNCHING SHALL BE IN COMPLETELY DEWATERED TRENCHES IN LIFTS NOT EXCEEDING 6 INCHES, LOOSE MEASUREMENT. ALL LIFTS SHALL BE COMPACTED BY HAND TAMPING. HAUNCHING SHALL BE BROUGHT UP EQUALLY ON BOTH SIDES OF THE PIPE.

D. BEDDING SHALL BE INSTALLED IN COMPLETELY DEWATERED TRENCHES IN LIFTS NOT EXCEEDING 6 INCHES, LOOSE MEASUREMENT, AND SHALL BE COMPACTED BY HAND OR MECHANICAL TAMPING. PROPERLY SHAPED BELL HOLES SHALL BE EXCAVATED IN THE BEDDING TO PERMIT ASSEMBLY OF THE PIPE. REFER TO ADDITIONAL NOTE J.

E. NATIVE, UNDISTURBED MATERIAL IN COMPLETELY DEWATERED TRENCHES MEETING THE COMPACTION AND MATERIAL REQUIREMENTS FOR COMPACTED BEDDING MATERIAL NEED NOT BE REPLACED OR REWORKED, EXCEPT FOR SHAPING OF THE BELL HOLES, AND WHERE REFILL IS REQUIRED.

F. FOUNDATION SHALL BE REQUIRED WHERE UNSUITABLE MATERIAL IS ENCOUNTERED. FOUNDATION SHALL BE IN ACCORDANCE WITH THE REQUIREMENTS FOR BEDDING. REFER TO ADDITIONAL NOTE H.

ADDITIONAL NOTES:

G. FOR TRENCHES IN VEHICULAR TRAFFIC AREAS OR BENEATH SURFACE IMPROVEMENTS (EG, SLAB, ETC.) SEE CONTRACT SPECIFICATIONS FOR ADDITIONAL COMPACTION REQUIREMENTS.

H. TRACING WIRE SHALL BE INSTALLED ON THE SIDE OF THE PIPE AND ATTACHED TO THE PIPE EVERY 10' W/ A NYLON WIRE TIE. IF THE WIRE IS DAMAGED OR NEEDS TO BE EXTENDED A 3M WATERPROOF TYPE UF SPLICE, OR APPROVED EQUAL, SHALL BE INSTALLED TO REPAIR THE WIRE. THE ENDS OF THE TRACING WIRE SHALL BE BROUGHT UP IN EVERY VALVE BOX ON THE LINE AND AT THE HYDRANT VALVES. THERE SHALL BE A MINIMUM COIL OF 3' LEFT UNDER THE VALVE BOX COVER. THE WIRE SHALL BE TESTED TO VERIFY CONDUCTIVITY.

J. ALTERNATIVE LIFT THICKNESSES, NOT EXCEEDING 12 INCHES LOOSE MEASUREMENT, ARE ACCEPTABLE IN TRENCH ZONES A THROUGH E PROVIDED 1) THE LIFT THICKNESS DOES NOT EXCEED THE MAXIMUM VALUE RECOMMENDED IN WRITING BY THE APPLICABLE PIPE MANUFACTURER AND 2) FIELD TEST RESULTS CONFIRM THAT THE SPECIFIED COMPACTION REQUIREMENTS ARE BEING MET.

K. CONSTRUCT STORMWATER POLLUTION PREVENTION ITEMS ADJACENT TO ALL SOIL DISTURBANCES ACCORDING TO DETAILS ON EN3. PLACE ON DOWN SLOPE TO INTERCEPT SEDIMENT AND PROTECT NEARBY WATER BODIES AND UNDISTURBED AREAS. MAINTAIN STORMWATER POLLUTION PREVENTION ITEMS IN GOOD WORKING ORDER UNTIL ADEQUATE COVER MATERIALS ARE ESTABLISHED. IF A REPAIR IS NECESSARY, IT WILL BE INITIATED WITHIN 24 HOURS OF REPORT. BUILT UP SEDIMENT WILL BE REMOVED FROM STAKED SILT FENCE AND STAKED TURBIDITY BARRIERS WHEN IT HAS REACHED ONE-HALF THE HEIGHT OF THE SILT FENCE OR BARRIER.

TYPICAL UTILITY TRENCH DETAIL (1)

NTS

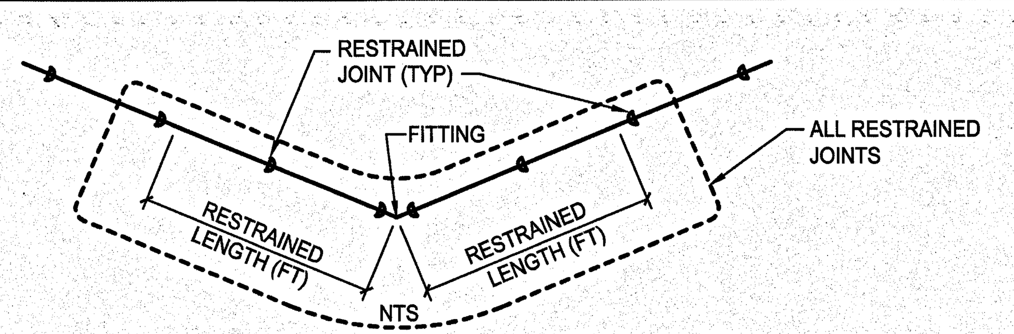

RESTRAINED JOINT SCHEDULE									
PIPE SIZE	FITTING								
	90° BEND	45° BEND	45° BEND (VERT)	22 1/2° BEND	22 1/2° BEND (VERT)	11 1/4° BEND	11 1/4° BEND (VERT)	VALVE, DEAD END OR REDUCER	TEE (BRANCH)
24"	89	37	113	18	36	9	18	273	273
16"	65	27	80	13	26	7	13	193	193
14"	58	24	71	12	23	6	12	172	172
12"	51	22	63	11	20	5	10	151	151
10"	44	18	53	9	17	5	9	128	128
8"	37	16	45	8	14	4	7	107	107
6"	29	12	34	6	11	3	6	82	82
4" (PVC)	17	8	16	4	8	2	4	38	37

NOTES:

A. RESTRAINED LENGTHS ARE IN FEET AND ARE FOR POLYETHYLENE WRAPPED DUCTILE IRON PIPE UNLESS OTHERWISE NOTED.

B. SEE SPECIFICATIONS FOR ADDITIONAL INFORMATION REGARDING RESTRAINED JOINTS.

C. THE SCHEDULE SHOWN IS FOR THE FOLLOWING SERVICE CONDITIONS 150 PSIG TEST PRESSURE; POORLY GRADED COARSE SAND; 36 INCHES COVER, TYPE 3 TRENCH CONDITIONS; AND 1.5 SAFETY FACTOR.

D. RESTRAINED LENGTHS SHOWN IN TABLE ARE IN FEET AND ARE MINIMUM LENGTHS REQUIRED IN EACH DIRECTION FROM FITTINGS OR VALVES.

E. ALL PIPE SHALL BE RESTRAINED TO THE NEXT JOINT BEYOND THE RESTRAINED LENGTH GIVEN.

F. RESTRAINED LENGTH FOR REDUCERS SHALL BE BASED ON THE SIZE OF THE LARGEST END OF THE REDUCER.

G. CONTRACTOR SHALL HAVE FLORIDA LICENSED PROFESSIONAL ENGINEER VERIFY ALL THE RESTRAINED LENGTHS SHOWN IN THE TABLE ABOVE ARE ADEQUATE FOR ALL VARYING SOIL CONDITIONS ON THE PROJECT. THE CONTRACTOR'S ENGINEER SHALL PROVIDE A SIGNED AND SEALED STATEMENT THAT ALL PIPING WAS INSTALLED IN ACCORDANCE WITH THE REQUIREMENTS OF THE TABLE ABOVE OR IN ACCORDANCE WITH THE FINDINGS OF THE CONTRACTOR'S PROFESSIONAL ENGINEER, WHICHEVER ARE MORE STRINGENT. CONTRACTOR'S COST FOR MEETING THESE REQUIREMENTS SHALL BE INCLUDED IN THEIR BID.

H. FOR CONNECTION OF PIPING TO EXISTING PIPING, WHEN THE REQUIRED RESTRAINED JOINT PIPE LENGTHS TO PREVENT PIPE MOVEMENT CANNOT BE ATTAINED IN ACCORDANCE WITH RESTRAINED JOINT SCHEDULE, THE APPROPRIATE TEE, VALVES, BEND AND/OR CROSS FITTING(S) SHALL BE FULLY RESTRAINED IN ACCORDANCE WITH THRUST BLOCK DETAIL TO PREVENT PIPE MOVEMENT. (1/C210) (3/C210)

J. WHERE HDD CONNECT TO PUSH-ON JOINT PIPING, THIS CONNECTION SHALL BE TREATED AS DEAD END W/ RESPECT TO THE RESTRAINED JOINT SCHEDULE.

RESTRAINED JOINT SCHEDULE

NTS

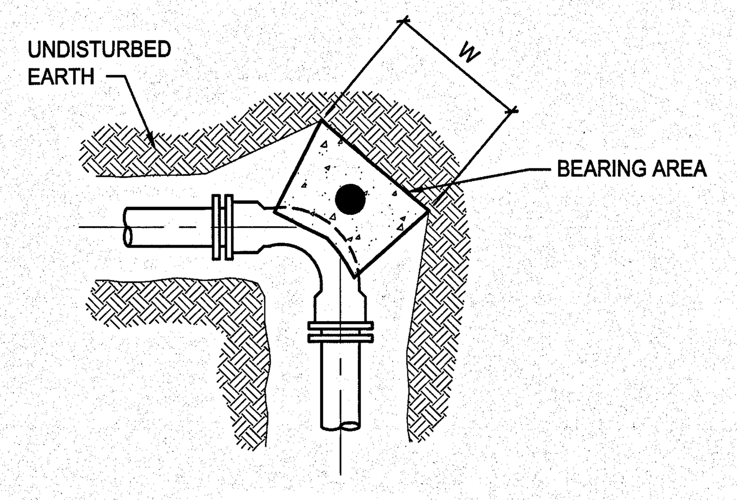

BENDS PLAN

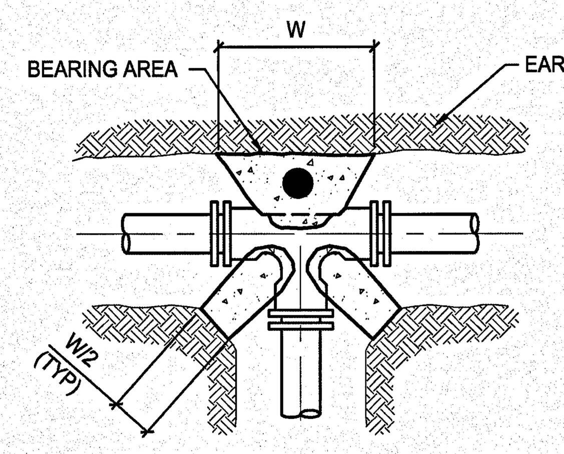

TEE PLAN

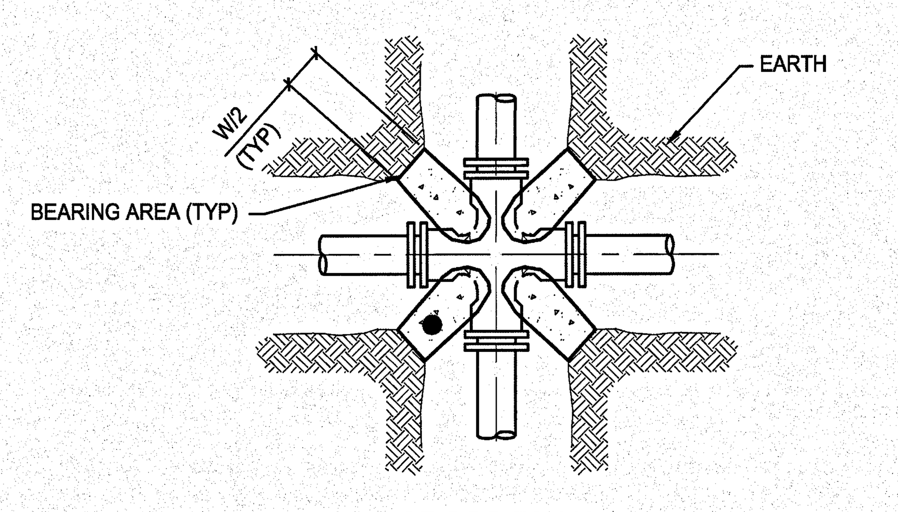

CROSS PLAN

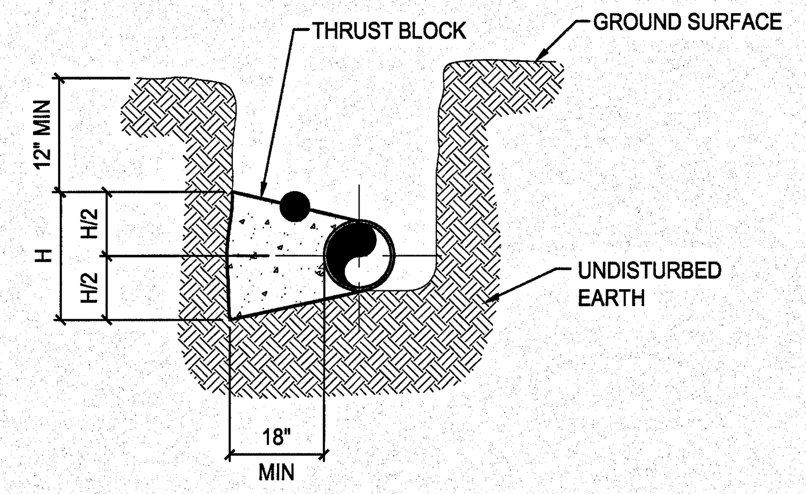

ILLUSTRATIVE SECTION

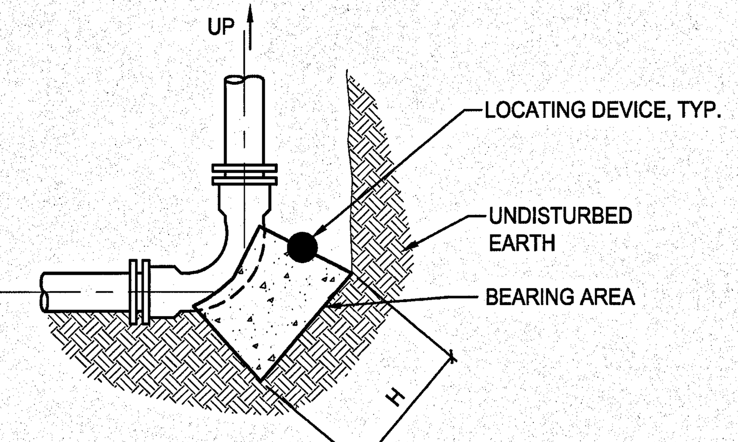

BENDS IN SECTION

REACTION BLOCK BEARING AREA DIMENSIONS					
FITTING	11 1/4° BEND	22 1/2° BEND	45° BEND	90° BEND	TEE/CROSS/ PLUGS/CAPS
SIZE (in)	H x W (in)	H x W (in)	H x W (in)	H x W (in)	H x W (in)
4	11x11	15x15	20x20	28x28	23x23
6	15x15	21x21	29x29	40x40	33x33
8	20x20	27x27	38x38	52x52	44x44
10	24x24	33x33	47x47	63x63	53x53
12	28x28	40x40	55x55	75x75	63x63
14	33x33	46x46	64x64	87x87	73x73
16	37x37	52x52	73x73	99x99	83x83
18	42x42	58x58	82x82	111x111	93x93
24	55x55	77x77	108x108	146x146	123x123

REACTION BLOCK NOTES

A. BASED ON 150 PSI PRESSURE & 1500 PSF SOIL BEARING VALUE, 2.0 SAFETY FACTOR, WATER TABLE BELOW THE THRUST BLOCK, VERTICAL BLOCK FACE, AND A MINIMUM THICKNESS OF 18 INCHES.

B. BEARING AREAS FOR PLUGS SHALL BE THE SAME AS FOR TEES.

C. FORM REACTION BLOCKS TO KEEP CONCRETE CLEAR OF JOINTS AND BOLTS.

D. REQUIRED REACTION BLOCK BEARING AREA SHALL BE PLACED AGAINST UNDISTURBED MATERIAL. WHERE TRENCH WALL HAS BEEN DISTURBED, EXCAVATE ALL LOOSE MATERIAL AND EXTEND REACTION BLOCK TO UNDISTURBED MATERIAL.

E. PLACE PRESSURE TREATED WOOD BOARDS IN FRONT OF PLUG, AT TEE, CROSS OR END OF PIPE BEFORE POURING CONCRETE REACTION BLOCK.

F. BACKFILL SHALL CONSIST ENTIRELY OF CLEAN SAND AND ROCK FRAGMENTS. ANY MUCK ENCOUNTERED SHALL BE REPLACED WITH BACKFILL COMPACTED TO 95% MODIFIED PROCTOR MAXIMUM DRY DENSITY, ASTM D1557.

G. CONTRACTOR TO OBTAIN LOCATING DEVICES AND TO EMBED THE DEVICE INTO THE TOP SURFACE ON THE THRUST BLOCK SUCH THAT HALF THE DEVICE IS EXPOSED AND THE LOCATION IS AT THE CENTROID OF THE THRUST BLOCK TOP SURFACE AREA. THE LOCATING DEVICES SHALL BE OMNI MARKER MODEL 161 WATER MARKER OR APPROVED EQUAL.

H. CONTRACTOR SHALL HAVE FLORIDA LICENSED PROFESSIONAL ENGINEER VERIFY ALL THE REACTION BLOCK SIZES SHOWN IN THE TABLE ABOVE ARE ADEQUATE FOR ALL VARYING SOIL CONDITIONS ON THE PROJECT. THE CONTRACTOR'S ENGINEER SHALL PROVIDE A SIGNED AND SEALED STATEMENT THAT ALL REACTION BLOCKS WERE INSTALLED IN ACCORDANCE WITH THE REQUIREMENTS OF THE TABLE ABOVE OR IN ACCORDANCE WITH THE FINDINGS OF THE CONTRACTOR'S PROFESSIONAL ENGINEER, WHICHEVER ARE MORE STRINGENT. CONTRACTOR'S COST FOR MEETING THESE REQUIREMENTS SHALL BE INCLUDED IN THEIR BID.

TYPICAL REACTION BLOCK (THRUST BLOCK) DETAILS (3)

NTS

SYM	ZONE		DATE	APPROVED

REVISIONS

JONES EDMUNDS
730 NE WALDO ROAD, GAINESVILLE, FLORIDA 32641 / (352) 377-5821
3910 S WASHINGTON AVE, SUITE 210, TITUSVILLE, FLORIDA 32780 / (321) 269-2950

SIGNATURES	DATE
DRAWN P. UPSTILL	12.18.13
CHECKED M. O'BRIEN	12.18.13
SUBMITTED: ARCH/ENG OF RECORD W. NICKEL	12/18/13
ST of LICENSURE: FL LICENSE NO: 68638	
APPROVED R. KOLLER	12/18/13
K. MILLER	12/19/13

NATIONAL AERONAUTICS AND SPACE ADMINISTRATION
JOHN F. KENNEDY SPACE CENTER, NASA
KENNEDY SPACE CENTER, FLORIDA

KSC CENTRAL CAMPUS
REPLACEMENT HEADQUARTERS BUILDING
PHASE 1
VOL. 1 OF 4

CIVIL DETAILS

FILE NO.	SIZE	DWG. NO.
C-12070.00	F	79K39622 VOL 1

PCN. NO. 98745.1a

C210

KSC FORM 1-11 (3/76)(C/G 3/94)

NOTICE: When Government drawings, specifications, or other data are used for any purpose other than in connection with a definitely related Government procurement operation, the United States Government thereby incurs no responsibility nor obligation whatsoever; and the fact that the Government may have formulated, furnished, or in any way supplied the said drawings, specifications or other data is not to be regarded by implication or otherwise as in any manner licensing the holder or any other person or corporation, or conveying any rights or permission to manufacture, use, or sell any patented invention that may in any way be related thereto.

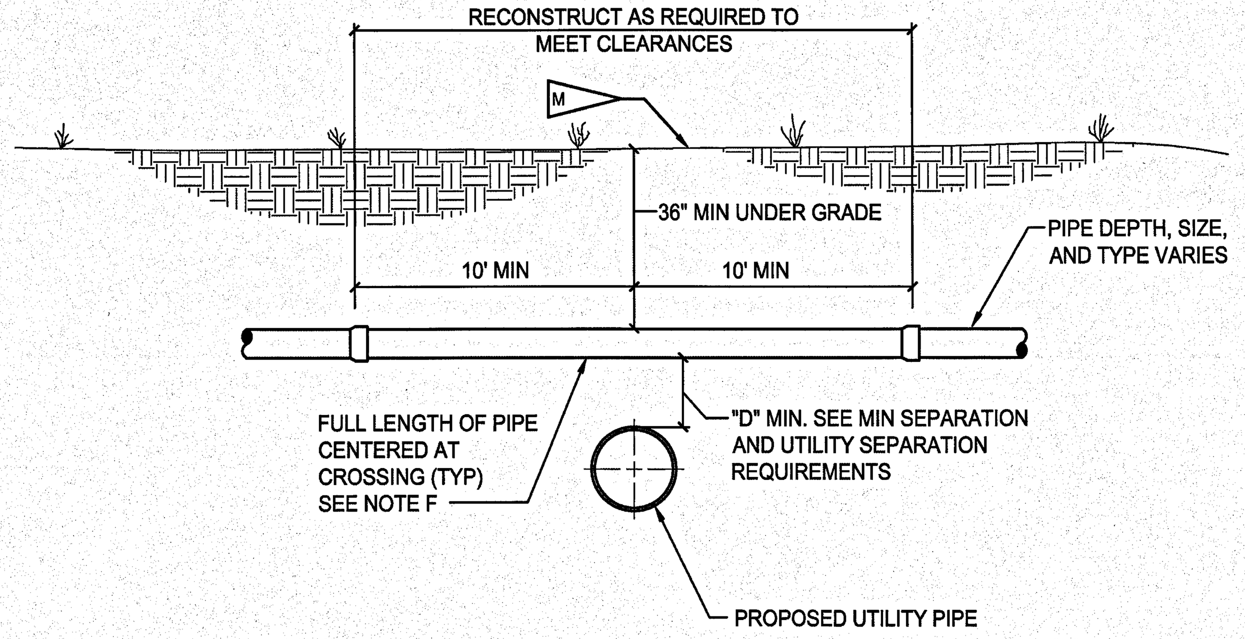

EXISTING UTILITY OVER PROPOSED

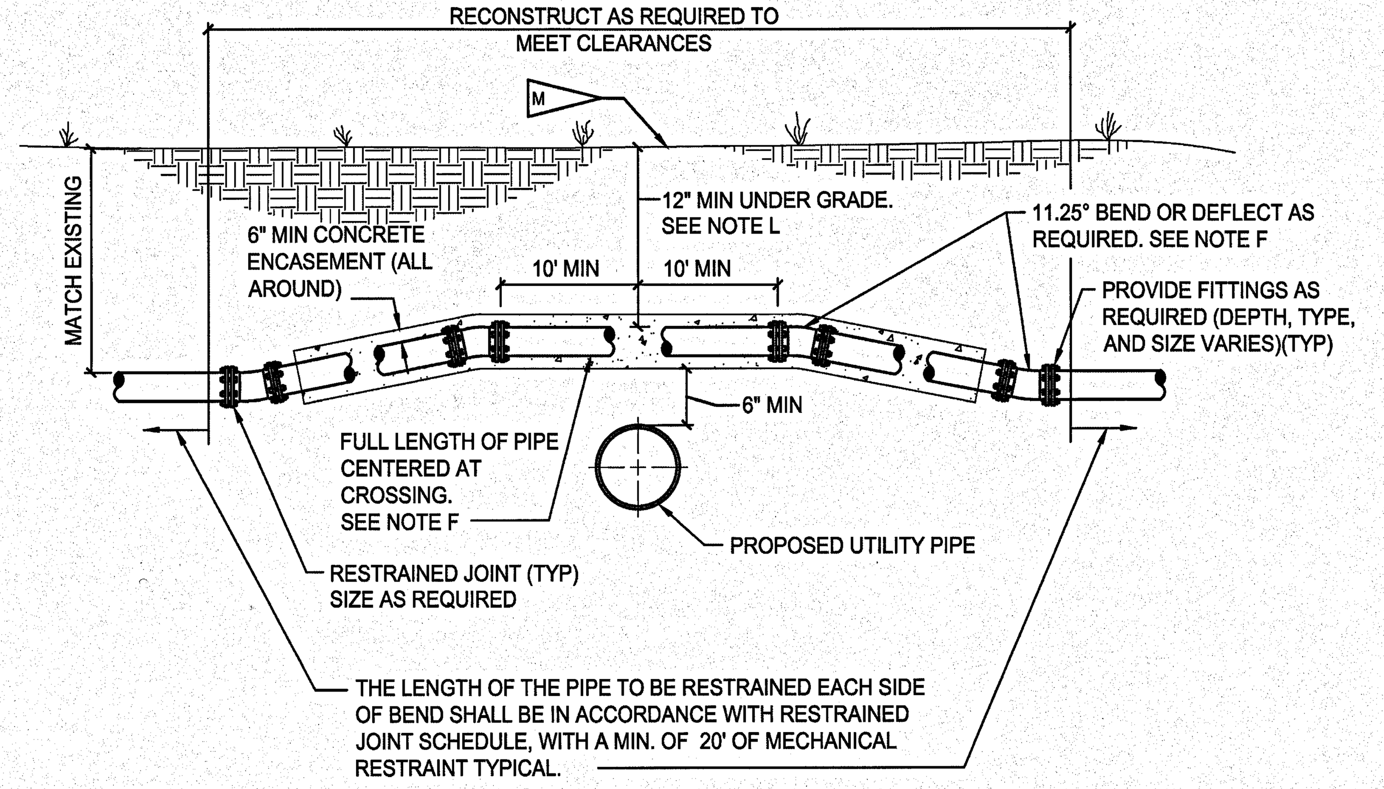

EXISTING UTILITY OVER PROPOSED (ENCASED)

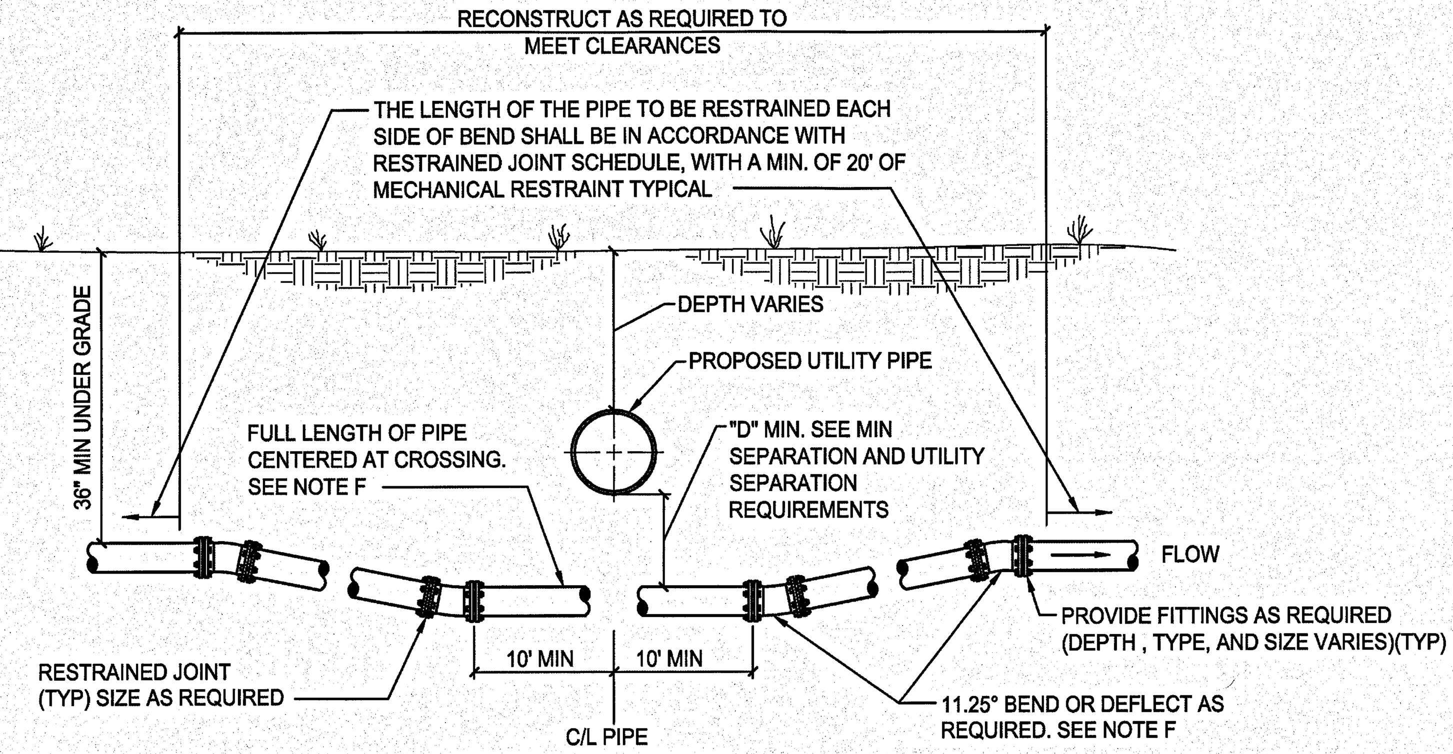

EXISTING UTILITY UNDER PROPOSED

UTILITY SEPARATION REQUIREMENTS

A. IT IS REQUIRED THAT "WATER MAINS" BE INSTALLED, CLEANED, DISINFECTED AND HAVE A SATISFACTORY BACTERIOLOGICAL SURVEY PERFORMED IN ACCORDANCE WITH THE LATEST APPLICABLE AWWA STANDARDS AND CHAPTER 62-555, F.A.C. STANDARDS. FOR THE PURPOSE OF THIS SECTION, THE PHRASE "WATER MAINS" SHALL MEAN MAINS, INCLUDING TREATMENT PLANT PROCESS PIPING, CONVEYING EITHER RAW, PARTIALLY TREATED, OR FINISHED DRINKING WATER; FIRE HYDRANT LEADS; AND SERVICE LINES THAT HAVE AN INSIDE DIAMETER OF THREE (3) INCHES OR GREATER. IN ADDITION, THE PHRASE "REGULATED PUBLIC ACCESS RECLAIMED WATER" REFERS TO THE WATER REGULATED UNDER PART III OF CHAPTER 62.210, F.A.C.

B. NEW, RELOCATED OR EXISTING UNDERGROUND WATER MAINS SHALL BE LAID TO PROVIDE A HORIZONTAL DISTANCE OF AT LEAST THREE (3) FEET BETWEEN THE OUTSIDE OF THE WATER MAIN AND THE OUTSIDE OF ANY EXISTING OR PROPOSED STORM SEWER, STORMWATER FORCE MAIN, OR PIPELINE CONVEYING REGULATED PUBLIC ACCESS RECLAIMED WATER.

C. NEW OR RELOCATED, UNDERGROUND SEWER/WATER MAINS SHALL BE LOCATED TO PROVIDE A HORIZONTAL DISTANCE OF AT LEAST SIX (6) FEET, AND PREFERABLY TEN (10) FEET, BETWEEN THE OUTSIDE OF THE SEWER/WATER MAIN AND THE OUTSIDE OF ANY EXISTING OR PROPOSED WATER/GRAVITY OR PRESSURE-TYPE SANITARY SEWER, NON-REGULATED RECLAIMED WATER, OR WASTEWATER FORCE MAIN. THE MINIMUM HORIZONTAL SEPARATION DISTANCE BETWEEN WATER MAINS AND GRAVITY-TYPE SANITARY SEWERS MAY BE REDUCED TO THREE (3) FEET WHERE THE BOTTOM OF THE WATER MAIN IS LOCATED AT LEAST SIX (6) INCHES ABOVE THE TOP OF THE SEWER (SPECIAL CASE).

D. NEW, RELOCATED OR EXISTING UNDERGROUND WATER MAINS CROSSING ANY EXISTING OR PROPOSED GRAVITY OR VACUUM-TYPE SANITARY SEWER, OR STORM SEWER SHALL BE LOCATED SO THE OUTSIDE OF THE WATER MAIN IS AT LEAST SIX (6) INCHES, AND PREFERABLE TWELVE (12) INCHES, ABOVE OR AT LEAST TWELVE (12) INCHES BELOW THE OUTSIDE OF THE OTHER PIPELINE. HOWEVER, IT IS PREFERABLE TO LAY THE WATER MAIN ABOVE THE OTHER PIPELINE.

E. NEW, RELOCATED OR EXISTING UNDERGROUND WATER MAINS CROSSING ANY EXISTING OR PROPOSED PRESSURE-TYPE SANITARY SEWER, WASTEWATER OR STORMWATER FORCE MAIN, OR PIPELINE CONVEYING RECLAIMED WATER SHALL BE LOCATED SO THE OUTSIDE OF THE WATER MAIN IS A LEAST TWELVE (12) INCHES ABOVE OR BELOW THE OUTSIDE OF THE OTHER PIPELINE. HOWEVER, IT IS PREFERABLE TO LAY THE WATER MAIN ABOVE THE OTHER PIPELINE.

F. AT THE UTILITY CROSSINGS DESCRIBED IN NOTES D AND E ABOVE, ONE FULL LENGTH OF WATER MAIN PIPE SHALL BE CENTERED ABOVE OR BELOW THE OTHER PIPELINE SO THE WATER MAIN JOINTS WILL BE AS FAR AS POSSIBLE FROM THE OTHER PIPELINE. ALTERNATIVELY, AT SUCH CROSSINGS, THE PIPES SHALL BE ARRANGED SO THAT ALL WATER MAIN JOINTS ARE AT LEAST THREE (3) FEET FROM ALL JOINTS IN VACUUM-TYPE SANITARY SEWERS, STORM SEWERS, STORMWATER FORCE MAINS, OR PIPELINES CONVEYING REGULATED PUBLIC ACCESS RECLAIMED WATER, AND AT LEAST SIX (6) FEET FROM ALL JOINTS IN GRAVITY OR PRESSURE-TYPE SANITARY SEWERS, NON-REGULATED RECLAIMED WATER, OR WASTEWATER FORCE MAINS.

G. NEW, RELOCATED OR EXISTING FIRE HYDRANTS SHALL BE LOCATED SO THAT THE HYDRANTS ARE AT LEAST THREE (3) FEET FROM ANY EXISTING OR PROPOSED STORM SEWER, STORMWATER FORCE MAIN, OR PIPELINE CONVEYING REGULATED PUBLIC ACCESS RECLAIMED WATER; AT LEAST THREE (3) FEET, AND PREFERABLY TEN (10) FEET, FROM ANY EXISTING OR PROPOSED VACUUM-TYPE SANITARY SEWER; AT LEAST SIX (6) FEET, AND PREFERABLY TEN (10) FEET, FROM ANY EXISTING OR PROPOSED GRAVITY OR PRESSURE-TYPE SANITARY SEWER OR WASTEWATER FORCE MAIN.

H. IF THE CONTRACTOR CAN NOT MEET THE MINIMUM SEPARATION REQUIREMENTS HE/SHE MUST NOTIFY THE CONTRACTING OFFICER. THE CONTRACTING OFFICER IS REQUIRED TO DISCUSS MITIGATION WITH FDEP AND OBTAIN FDEP APPROVAL PRIOR TO INSTALLING ANY UTILITIES NOT IN COMPLIANCE WITH FDEP MINIMUM SEPARATION REQUIREMENTS.

J. IF THE WATER MAIN IS BELOW THE SEWER PIPE, THEN A MINIMUM OF 12" VERTICAL SEPARATION IS REQUIRED.

K. THE CONTRACTOR MAY CHOOSE TO DEFLECT THE PROPOSED PIPE UNDER OR OVER THE EXISTING UTILITY PIPE IN LIEU OF USING FITTINGS AS LONG AS THE MINIMUM DISTANCE "D" IS MAINTAINED AND THE AMOUNT OF PIPE DEFLECTION MEETS THE REQUIREMENTS OF THE SPECIFICATIONS.

L. CONCRETE ENCASEMENT NOT REQUIRED FOR COVER GREATER THAN 24 INCHES.

M. RESTORE SURFACE TO ORIGINAL CONDITION, OR TO PROPOSED AS INDICATED IN THE PLANS.

N. TRENCHING AND BACKFILL SHALL BE PER TYPICAL UTILITY TRENCH DETAIL 1/C210

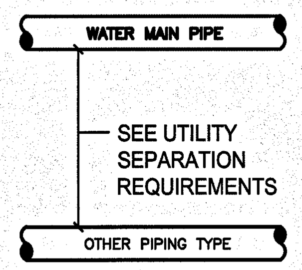

PLAN VIEW

OTHER PIPING TYPE	MINIMUM HORIZONTAL SEPARATION (FEET) SEE NOTE C
1. GRAVITY SANITARY SEWER	6
2. GRAVITY SANITARY SEWER (SPECIAL CASE, NOTE C)	3
3. SEWAGE FORCE MAIN	6
4. GRAVITY STORM SEWER	3
5. RECLAIMED WATER (PUBLIC ACCESS)	3
6. ELECTRIC/ COMMUNICATION	3
7. OTHER	6

MINIMUM HORIZONTAL SEPARATION REQUIREMENTS

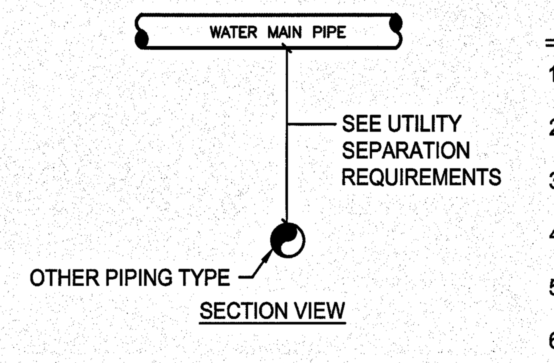

SECTION VIEW

OTHER PIPING TYPE	"D" - MINIMUM VERTICAL SEPARATION (INCHES) SEE NOTE D
1. GRAVITY SANITARY SEWER	6
2. SEWAGE FORCE MAIN	12
3. GRAVITY STORM SEWER	6
4. RECLAIMED WATER	12
5. ELECTRIC/ COMMUNICATION	6
6. OTHER	12

MINIMUM VERTICAL SEPARATION REQUIREMENTS

TYPICAL UTILITY CONFLICT DETAIL 1/•
NTS

SYM	ZONE		DATE	APPROVED

REVISIONS

JONES EDMUNDS
730 NE WALDO ROAD, GAINESVILLE, FLORIDA 32641 / (352) 377-5821
3910 S WASHINGTON AVE, SUITE 210, TITUSVILLE, FLORIDA 32780 / (321) 269-2950

SIGNATURES	DATE
DRAWN P. UPSTILL	12.18.13
CHECKED M. O'BRIEN	12.18.13
SUBMITTED, ENGINEER OF RECORD W. NICKEL	12/18/13
ST of LICENSURE: FL	
LICENSE NO: 59538	
APPROVED K. MILLER	12/18/13
K. MILLER	12/19/13

NATIONAL AERONAUTICS AND SPACE ADMINISTRATION
JOHN F. KENNEDY SPACE CENTER, NASA
KENNEDY SPACE CENTER, FLORIDA

KSC CENTRAL CAMPUS
REPLACEMENT HEADQUARTERS BUILDING
PHASE 1
VOL. 1 OF 4

CIVIL DETAILS

C211

FILE NO.	SIZE	DWG. NO.
C-12070.00	F	79K39622 VOL 1
PCN. NO. 98745.1a		SHEET 82

KSC FORM 1-11 (3/76)(C/G 3/94)

NOTICE: When Government drawings, specifications, or other data are used for any purpose other than in connection with a definitely related Government procurement operation, the United States Government thereby incurs no responsibility nor obligation whatsoever; and the fact that the Government may have formulated, furnished, or in any way supplied the said drawings, specifications or other data is not to be regarded by implication or otherwise as in any manner licensing the holder or any other person or corporation, or conveying any rights or permission to manufacture, use, or sell any patented invention that may in any way be related thereto.

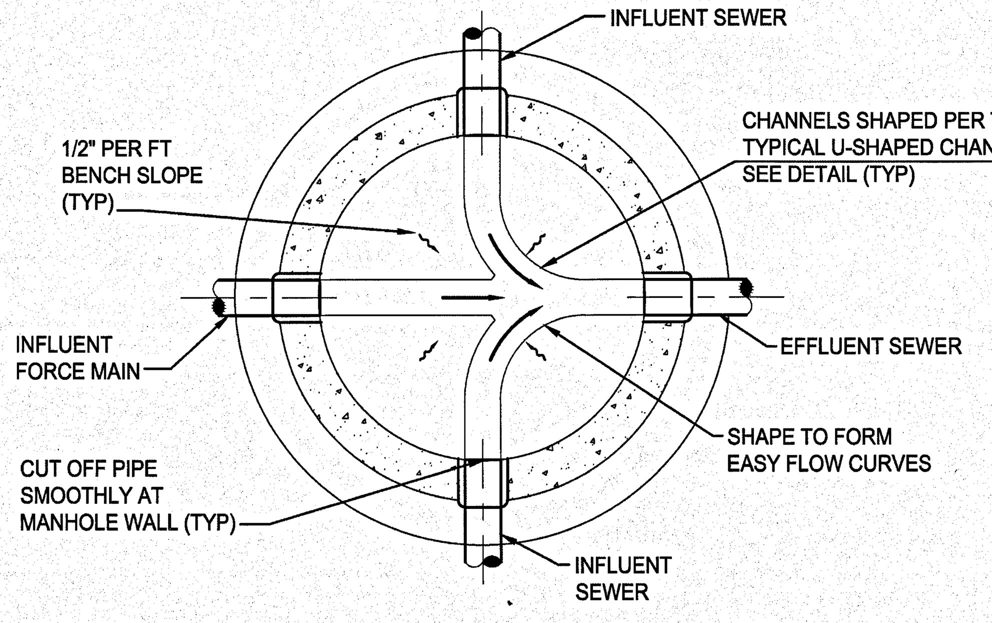

PLAN

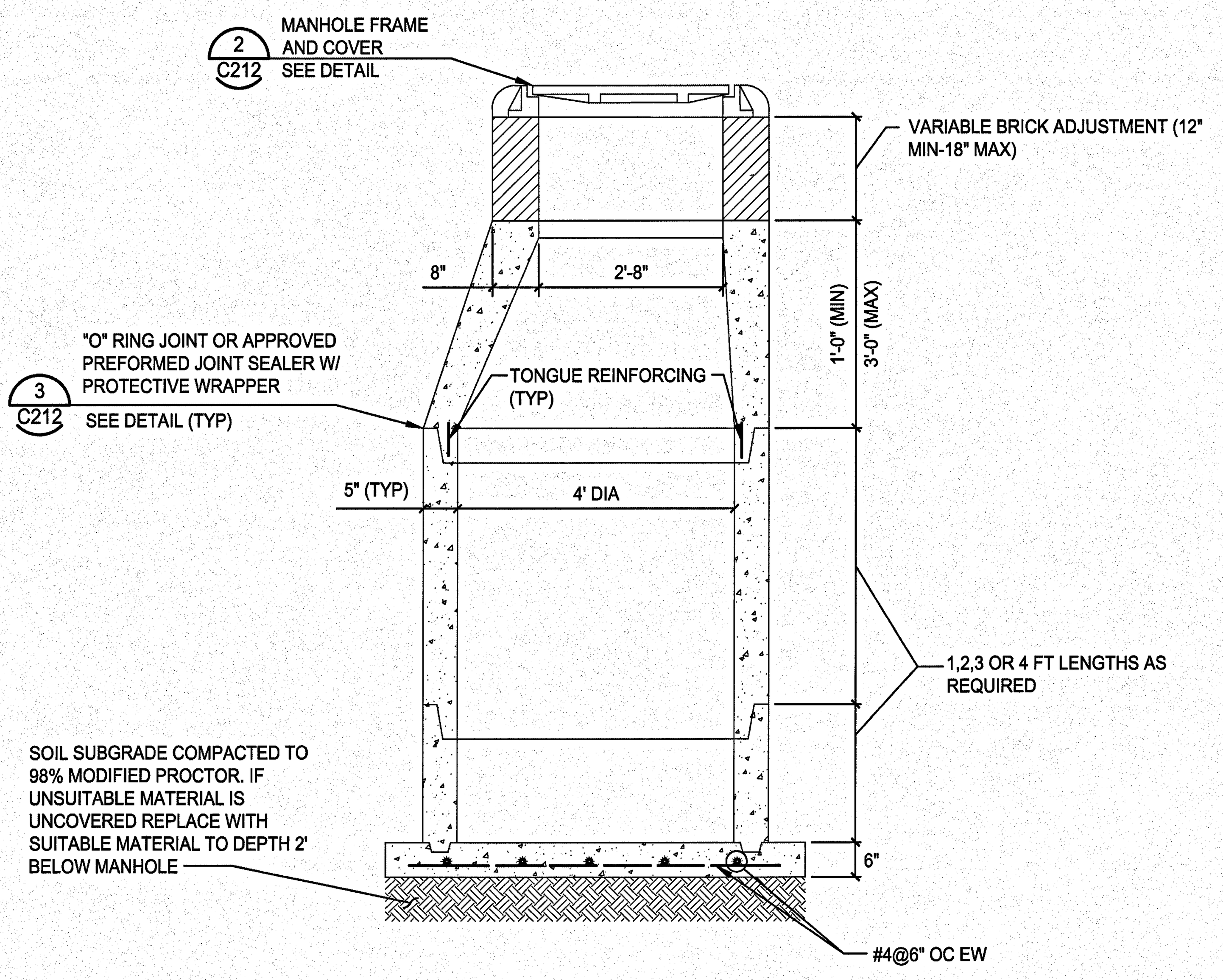

SECTION

NOTES:

A. FOR ALL MANHOLE TYPES, IF BASE RESTS IN CLAY SOILS, EXCAVATE AN ADDITIONAL 24", AND BACKFILL IN AND AROUND STRUCTURE "FULL DEPTH" WITH ASTM A-3 RATED MATERIAL. CONNECTIONS AND GROUTING IN MANHOLE NOT SHOWN.

B. SEE UTILITY PROFILES AND TABLES FOR PIPE CONNECTIONS, LOCATIONS, AND INVERTS.

PRECAST CONCRETE MANHOLE DETAIL 1

NTS

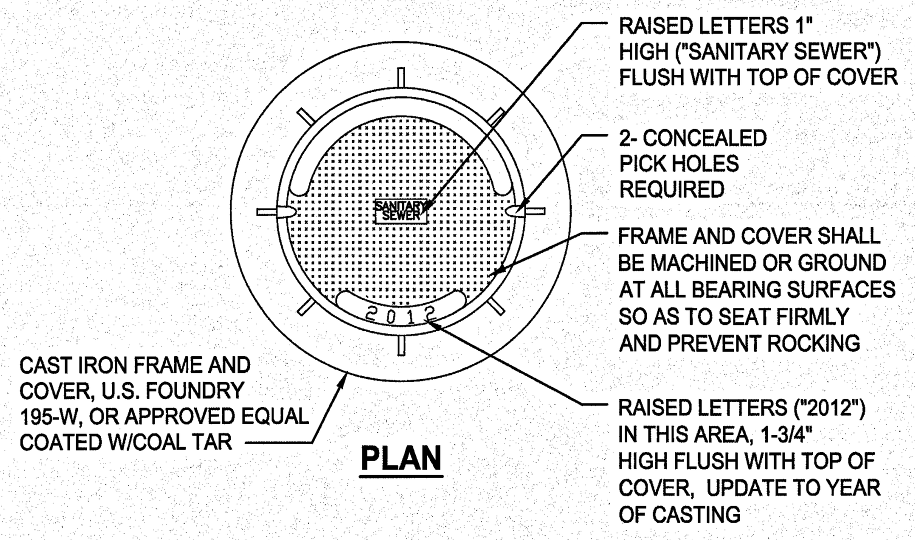

PLAN

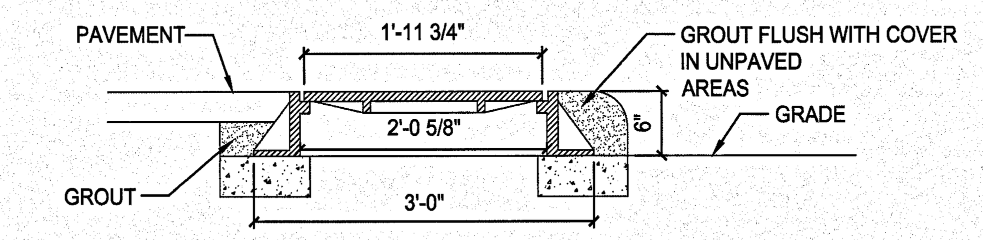

SECTION

MANHOLE FRAME AND COVER DETAIL 2

NTS C212

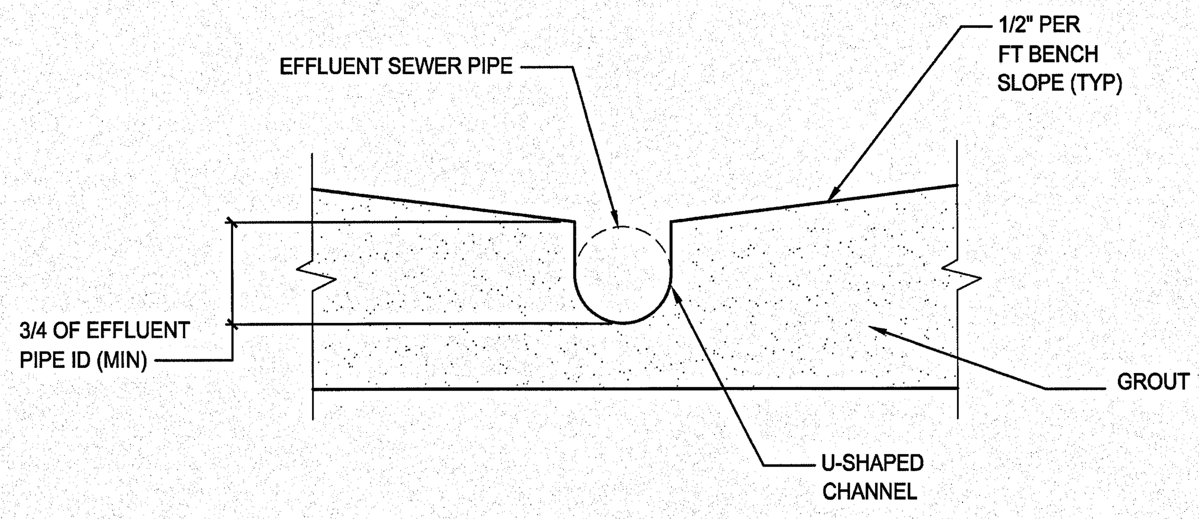

TYPICAL U-SHAPED CHANNEL DETAIL 4

NTS C212

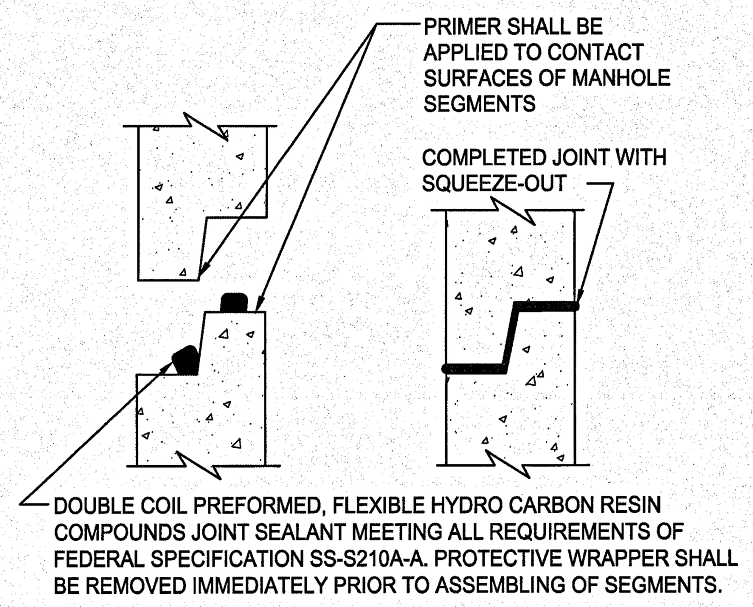

TYPICAL PRECAST SEGMENT JOINT DETAIL W/ SEALANT 3

NTS C212

SYM	ZONE		DATE	APPROVED

REVISIONS

JONES EDMUNDS
730 NE WALDO ROAD, GAINESVILLE, FLORIDA 32641 / (352) 377-5821
3910 S WASHINGTON AVE, SUITE 210, TITUSVILLE, FLORIDA 32780 / (321) 269-2950

SIGNATURES	DATE
DRAWN P. UPSTILL	12.18.13
CHECKED M. O'BRIEN	12.18.13
SUBMITTED: ARCH/ENG OF RECORD W. NICKEL	12/18/13
ST of LICENSURE: FL LICENSE NO: 68638	
APPROVED R. KOLLER	12/18/13
K. MILLER	12/19/13

NATIONAL AERONAUTICS AND SPACE ADMINISTRATION
JOHN F. KENNEDY SPACE CENTER, NASA
KENNEDY SPACE CENTER, FLORIDA

KSC CENTRAL CAMPUS
REPLACEMENT HEADQUARTERS BUILDING
PHASE 1
VOL. 1 OF 4

CIVIL DETAILS

C212

FILE NO.	SIZE	DWG. NO.
C-12070.00	F	79K39622 VOL 1

PCN. NO. 98745.1a

KSC FORM 1-11 (3/76)(C/G 3/94)

NOTICE: When Government drawings, specifications, or other data are used for any purpose other than in connection with a definitely related Government procurement operation, the United States Government thereby incurs no responsibility nor obligation whatsoever; and the fact that the Government may have formulated, furnished, or in any way supplied the said drawings, specifications or other data is not to be regarded by implication or otherwise as in any manner licensing the holder or any other person or corporation, or conveying any rights or permission to manufacture, use, or sell any patented invention that may in any way be related thereto.

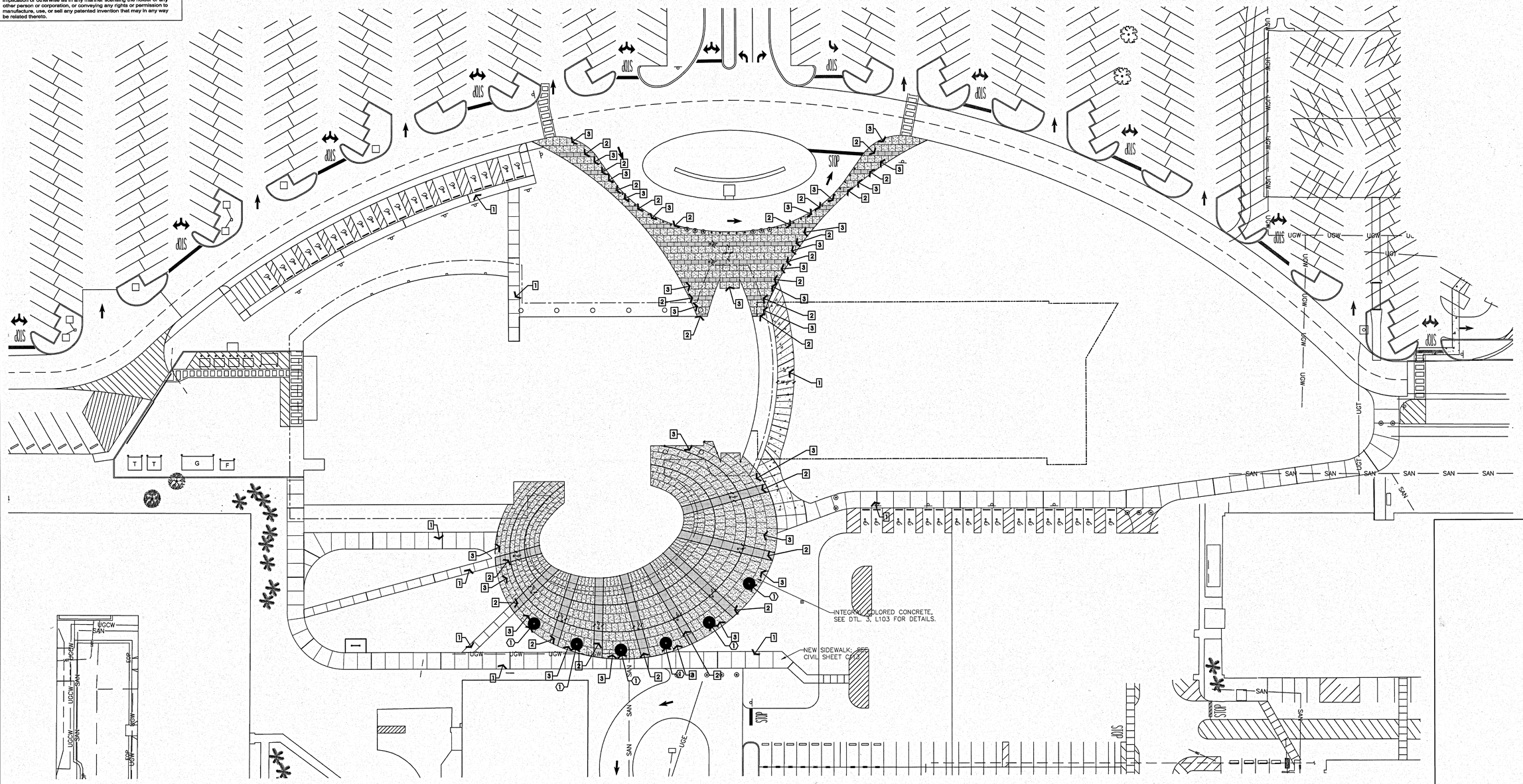

LEGEND

EXPANSION JOINT

CONTROL JOINT

PAVEMENT SCHEDULE

Pavement Key	Description
1	Concrete Sidewalks
2	Colored Concrete accent stripes plaza
3	Colored Concrete Paving plaza

SITE FURNISHING SCHEDULE

Symbol	Description
1	Tree Grates

SEE SHEET L103 FOR COMPLETE SCHEDULES.
SEE SHEET L103 FOR HARDSCAPE DETAILS

GRAPHIC SCALE
0 30 60 90
SCALE IN FEET
1" = 30'-0"

SYM	ZONE		DATE	APPROVED
		REVISIONS		

hhi DESIGN
Better Living by Design!
planning, landscape architecture & environmental graphics
136 west central blvd, suite 400
orlando, fl 32801
phone: 407.422.1449
florida license LC0000027

SIGNATURES	DATE
DRAWN	
Christi Jackson	12.18.13
CHECKED	
Ginger Corless	12.18.13
SUBMITTED: ARCHITECT OF RECORD	
Randy Kalman	12/18/13
ST of LICENSURE: FL	
LICENSE NO: LA 0000469	
APPROVED	
CHRISTI JACKSON	12/18/13
K. Miller	12/19/13

NATIONAL AERONAUTICS AND SPACE ADMINISTRATION
JOHN F. KENNEDY SPACE CENTER, NASA
KENNEDY SPACE CENTER, FLORIDA

KSC CENTRAL CAMPUS
REPLACEMENT HEADQUARTERS BUILDING
PHASE 1
VOL. 1 OF 4

HARDSCAPE PLAN

FILE NO.	SIZE	DWG. NO.
C -12070.00	F	79K39622 VOL 1

PCN. NO.98745.1a | SHEET 84

L101

L101 HARDSCAPE PLAN

1" = 30'-0"

KSC FORM 1-11 (3/76)(C/G 3/94)

NOTICE: When Government drawings, specifications, or other data are used for any purpose other than in connection with a definitely related Government procurement operation, the United States Government thereby incurs no responsibility nor obligation whatsoever; and the fact that the Government may have formulated, furnished, or in any way supplied the said drawings, specifications or other data is not to be regarded by implication or otherwise as in any manner licensing the holder or any other person or corporation, or conveying any rights or permission to manufacture, use, or sell any patented invention that may in any way be related thereto.

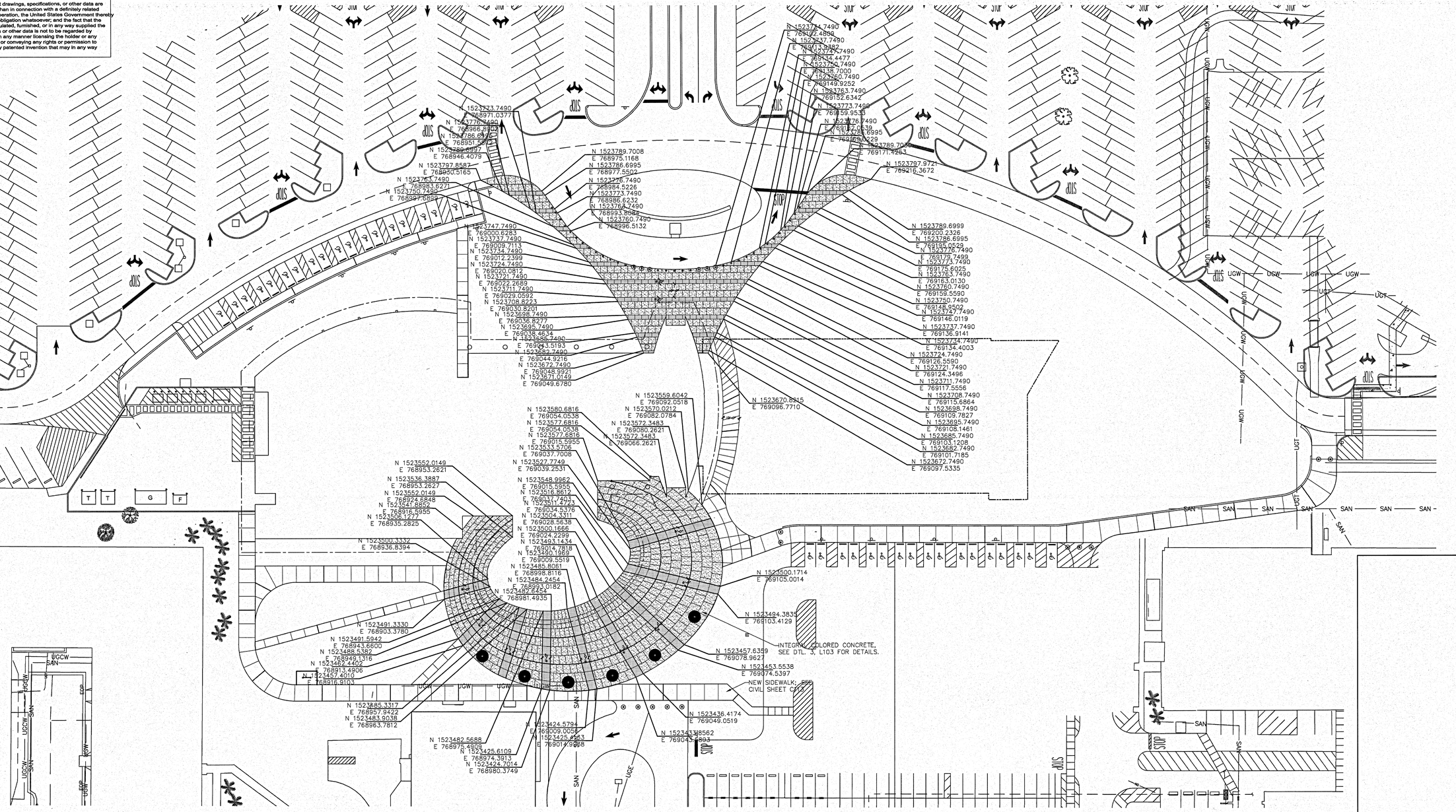

SEE SHEET L103 FOR HARDSCAPE DETAILS

GRAPHIC SCALE
0 30 60 90
SCALE IN FEET
1" = 30'-0"

SYM	ZONE		DATE	APPROVED

REVISIONS

hhi DESIGN — Better Living by Design
planning, landscape architecture & environmental graphics
135 west central blvd, suite 450
orlando, fl 32801
phone: 407.422.1449
florida license LC0000027

SIGNATURES	DATE
DRAWN	
Christi Jackson	12.18.13
CHECKED	
Ginger Cortess	12.18.13
SUBMITTED: RECORD OF	
Randy Darrigh	12/18/13
ST of LICENSURE: FL	
LICENSE NO: LA 0000460	
APPROVED	
CHRISTI JACKSON	12/18/13
K. Miller	12/19/13

NATIONAL AERONAUTICS AND SPACE ADMINISTRATION
JOHN F. KENNEDY SPACE CENTER, NASA
KENNEDY SPACE CENTER, FLORIDA

KSC CENTRAL CAMPUS
REPLACEMENT HEADQUARTERS BUILDING
PHASE 1
VOL. 1 OF 4

HARDSCAPE COORDINATES LAYOUT PLAN

FILE NO.	SIZE	DWG. NO.
C -12070.00	F	79K39622 VOL 1
PCN. NO.98745.1a		SHEET 85

L102	HARDSCAPE COORDINATES LAYOUT PLAN
1" = 30'-0"	

L102

KSC FORM 1-11 (3/76)(C/G 3/94)

NOTICE: When Government drawings, specifications, or other data are used for any purpose other than in connection with a definitely related Government procurement operation, the United States Government thereby incurs no responsibility nor obligation whatsoever; and the fact that the Government may have formulated, furnished, or in any way supplied the said drawings, specifications or other data is not to be regarded by implication or otherwise as in any manner licensing the holder or any other person or corporation, or conveying any rights or permission to manufacture, use, or sell any patented invention that may in any way be related thereto.

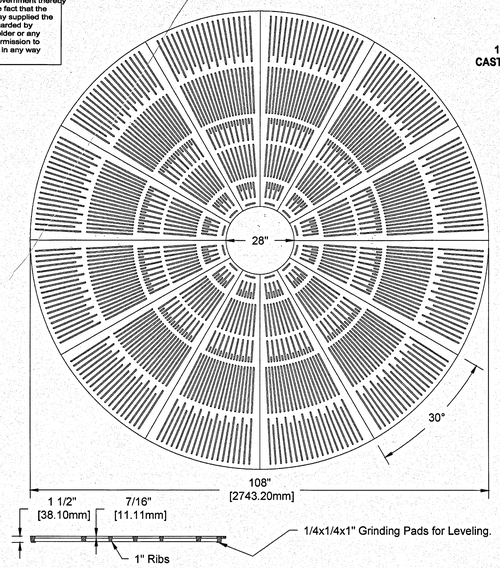

10801-1 STARBURST TREE GRATE
108" ROUND WITH 28" DIA. OPENING
CAST ALUMINUM BLACK POWDERCOAT

MANUF: IRONSMITH
1-800-338-4766 OR EQUAL

1 L103 TREE GRATE DETAIL

PLAN — SCALE = NTS

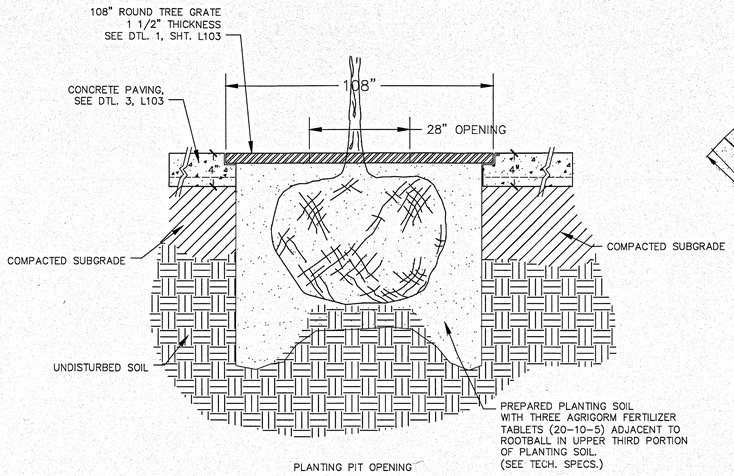

2 L103 TREE GRATE DETAIL

SECTION — SCALE = NTS

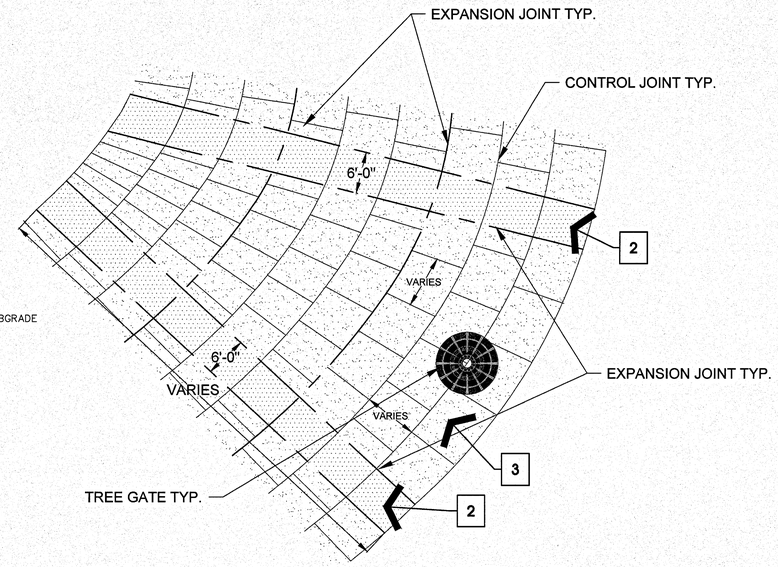

3 L103 CONCRETE PLAZA TYPICAL JOINT SCORING LAYOUT

SCALE = NTS

4 L103 CONCRETE SIDEWALK PAVING

SECTION — SCALE = NTS

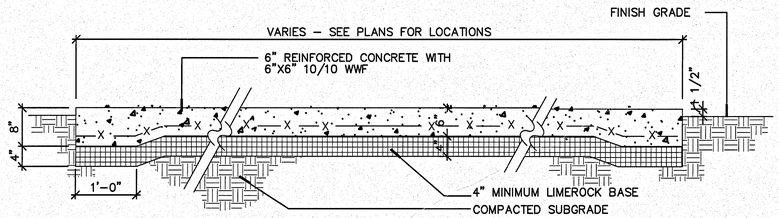

5 L103 COLORED CONCRETE PLAZA HARDSCAPE DETAIL

SECTION — SCALE = NTS

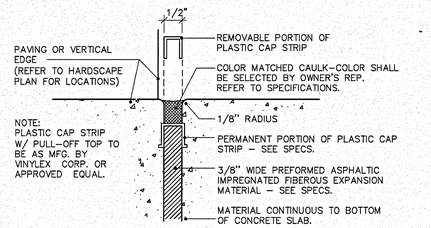

6 L103 EXPANSION JOINT DETAIL

SECTION — SCALE = NTS

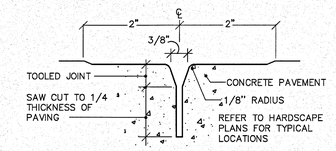

7 L103 TOOLED CONTROL JOINT DETAIL

SECTION — SCALE = NTS

SITE FURNISHING SCHEDULE

Symbol	Description	Manufacturer	Model / Color	Local Representative	Comments
1	Tree Grates	Ironsmith or Equal	10801-1 Starburst Tree Grate		cast aluminum; black powdercoat
		1-800-338-4766	108" round with 28" dia. Opening		

PAVEMENT SCHEDULE

Pavement Key	Description	Thickness / Size	Color / Type	Finish	Manufacturer
1	Concrete Sidewalks	4" thick	Standard Gray Concrete, 3000 psi	Broom	
2	Colored Concrete accent stripes plaza	6" thick	Blush Beige Color Hardener (include Color-match curing compound); color pending approval	Light broom finish	LM Scofield Company; Contact Steve Rissi 727-521-4330
3	Colored Concrete Paving plaza	6" thick	Coral Red Integral Colored Concrete (include Color-match curing compound); color pending approval	Medium broom finish	LM Scofield Company; Contact Steve Rissi 727-521-4330

SYM	ZONE		DATE	APPROVED
		REVISIONS		

hhi DESIGN
Better Living by Design!
planning, landscape architecture
& environmental graphics
136 west central blvd, suite 400
orlando, fl 32801
phone: 407.422.1449
florida license LC0000037

SIGNATURES	DATE
DRAWN Christi Jackson	12.18.13
CHECKED Gianni Cortese	12.18.13
SUBMITTED/ENGINEER OF RECORD Randy Rahman ST of LICENSURE: FL LICENSE NO: LA 00000460	12/18/13
APPROVED CHRISTI JACKSON	12/18/13
K. Miller	12/19/13

NATIONAL AERONAUTICS AND SPACE ADMINISTRATION
JOHN F. KENNEDY SPACE CENTER, NASA
KENNEDY SPACE CENTER, FLORIDA

KSC CENTRAL CAMPUS
REPLACEMENT HEADQUARTERS BUILDING
PHASE 1
VOL. 1 OF 4

HARDSCAPE DETAILS

FILE NO.	SIZE	DWG. NO.
C -12070.00	F	79K39622 VOL 1

PCN. NO. 98745.1a — SHEET 86

L103 HARDSCAPE DETAILS

NOTICE: When Government drawings, specifications, or other data are used for any purpose other than in connection with a definitely related Government procurement operation, the United States Government thereby incurs no responsibility nor obligation whatsoever; and the fact that the Government may have formulated, furnished, or in any way supplied the said drawings, specifications or other data is not to be regarded by implication or otherwise as in any manner licensing the holder or any other person or corporation, or conveying any rights or permission to manufacture, use, or sell any patented invention that may in any way be related thereto.

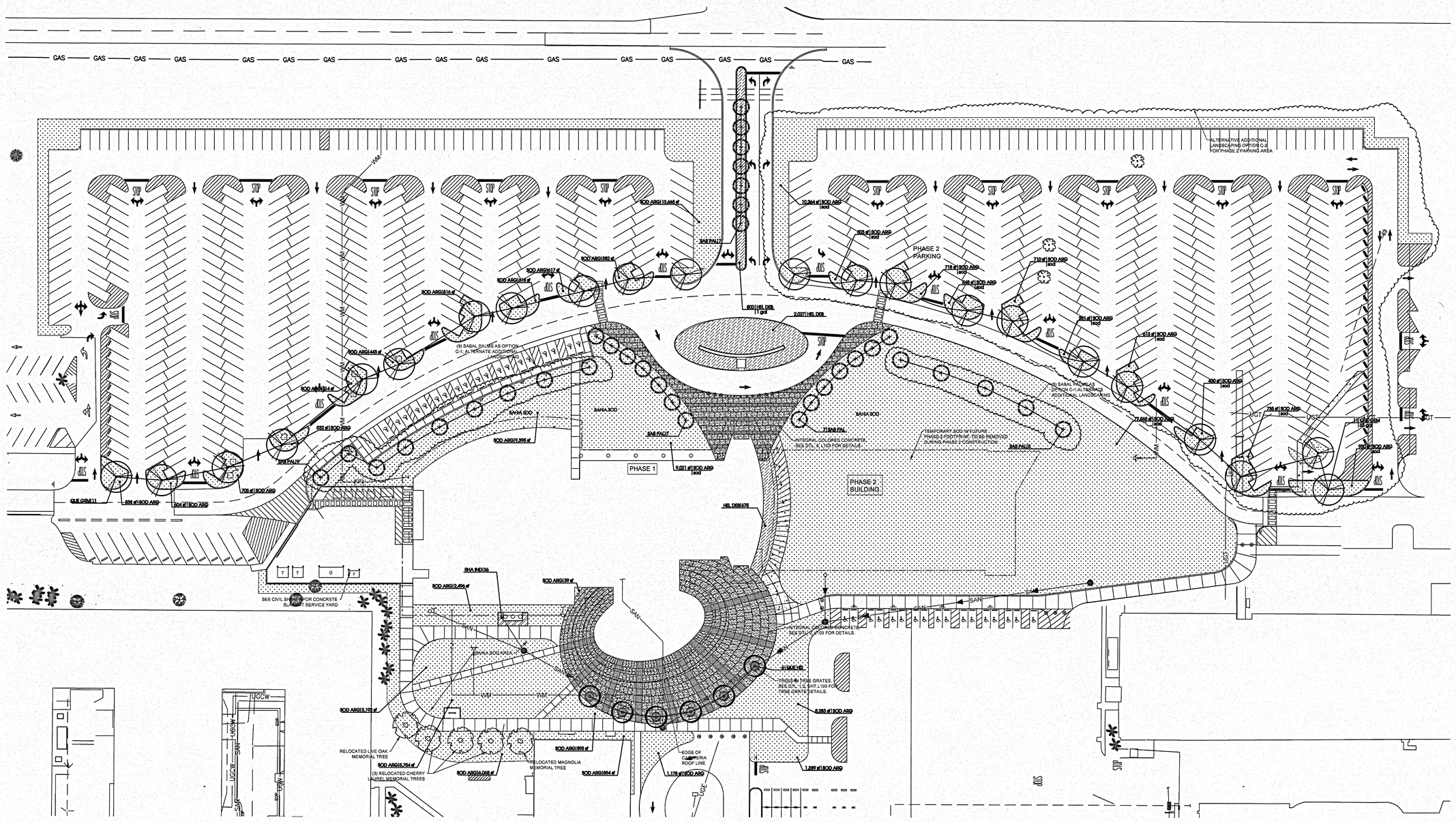

PLANT SCHEDULE

TREES	QTY	BOTANICAL NAME	COMMON NAME	CONT	CAL	SIZE	REMARKS
QUE HI2	6	Quercus virginiana 'High Rise'	High Rise Live Oak	FG	3"Cal	12'-14' H x 6' S	Roots Plus Grower
EVERGREEN TREES	**QTY**	**BOTANICAL NAME**	**COMMON NAME**	**CONT**	**CAL**	**SIZE**	**REMARKS**
QUE GEM	22	Quercus geminata	Sand Live Oak	65 gal	3.5"Cal	15' H x 8' S	single, straight trunk, full
PALM TREES	**QTY**	**BOTANICAL NAME**	**COMMON NAME**	**CONT**	**CAL**	**SIZE**	**REMARKS**
SAB PAL	35	Sabal palmetto	Cabbage Palm	B & B	14'Cal	14' C.T.	clean trunks
SHRUB AREAS	**QTY**	**BOTANICAL NAME**	**COMMON NAME**	**CONT**	**SIZE**	**SPACING**	**REMARKS**
RHA IND	36	Rhaphiolepis indica 'Alba'	Indian Hawthorn	3 gal	12" H x 12" S	30"	Full
GROUND COVERS	**QTY**	**BOTANICAL NAME**	**COMMON NAME**	**CONT**	**SIZE**	**SPACING**	**REMARKS**
HEL DEB	3,502	Hellanthus debilis	Beach Sunflower	1 gal	12" H x 12" S	18"	Full
SOD/SEED	**QTY**	**BOTANICAL NAME**	**COMMON NAME**	**CONT**	**SIZE**	**SPACING**	**REMARKS**
SOD ARG	159,178 sf	Paspalum notatum 'Argentine'	Bahia Grass "Argentine"	sod			

NOTE: ALL AREAS DISTURBED DURING CONSTRUCTION WILL BE SODDED.

AREAS DISTURBED DURING CONSTRUCTION TO RECEIVE NEW SOD

EXISTING MEMORIAL TREES RELOCATED

NOTE: ALL NEW TREES/GROUNDCOVER TO RECEIVE TEMPORARY IRRIGATION IN THE FORM OF AN UNDERGROUND SYSTEM. SYSTEM WILL BE CAPPED AND ABANDONED AFTER TREE/GROUNDCOVER ESTABLISHMENT, A MINIMUM OF 2 YEARS.

NOTE: REFER TO WRITTEN SPECIFICATIONS FOR FURTHER DETAILS

SEE SHEET L105 FOR LANDSCAPE DETAILS

GRAPHIC SCALE
0 40 80 120
SCALE IN FEET
1" = 40'-0"

L104 | LANDSCAPE PLAN
1" = 40'-0"

L104

SYM	ZONE	REVISIONS	DATE	APPROVED

SIGNATURES	DATE
DRAWN	
Christi Jackson	12.18.13
CHECKED	
Ginger Corless	12.18.13
SUBMITTED: ARCHITECT OF RECORD	
Randy Troncin	12/18/13
STATE LICENSURE: FL	
LICENSE NO: LA 0000460	
APPROVED	
CHRISTI JACKSON	12/18/13
K. Miller	12/19/13

bhi DESIGN
Better Living by Design!
planning, landscape architecture & environmental graphics
135 west central blvd, suite 450
orlando, fl 32801
phone: 407.422.1449
florida license LC0000027

NATIONAL AERONAUTICS AND SPACE ADMINISTRATION
JOHN F. KENNEDY SPACE CENTER, NASA
KENNEDY SPACE CENTER, FLORIDA

KSC CENTRAL CAMPUS
REPLACEMENT HEADQUARTERS BUILDING
PHASE 1
VOL. 1 OF 4

LANDSCAPE PLAN

FILE NO.	SIZE	DWG. NO.
C -12070.00	F	79K39622 VOL 2
PCN. NO.98745.1a		SHEET 87

KSC FORM 1-11 (3/76)(C/G 3/94)

NOTICE: When Government drawings, specifications, or other data are used for any purpose other than in connection with a definitely related Government procurement operation, the United States Government thereby incurs no responsibility nor obligation whatsoever; and the fact that the Government may have formulated, furnished, or in any way supplied the said drawings, specifications or other data is not to be regarded by implication or otherwise as in any manner licensing the holder or any other person or corporation, or conveying any rights or permission to manufacture, use, or sell any patented invention that may in any way be related thereto.

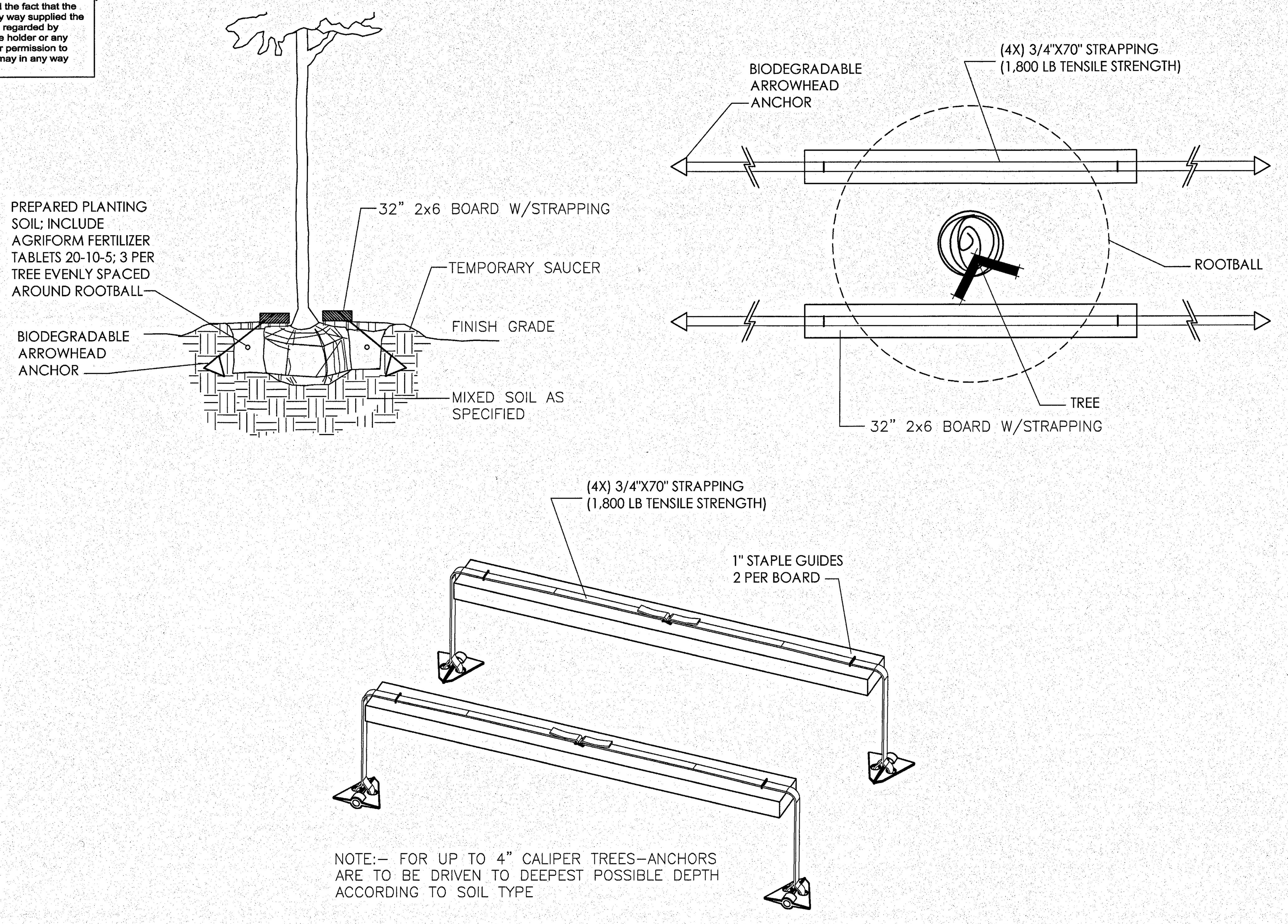

1 / L105 TREE PLANTING DETAIL

SCALE = NTS

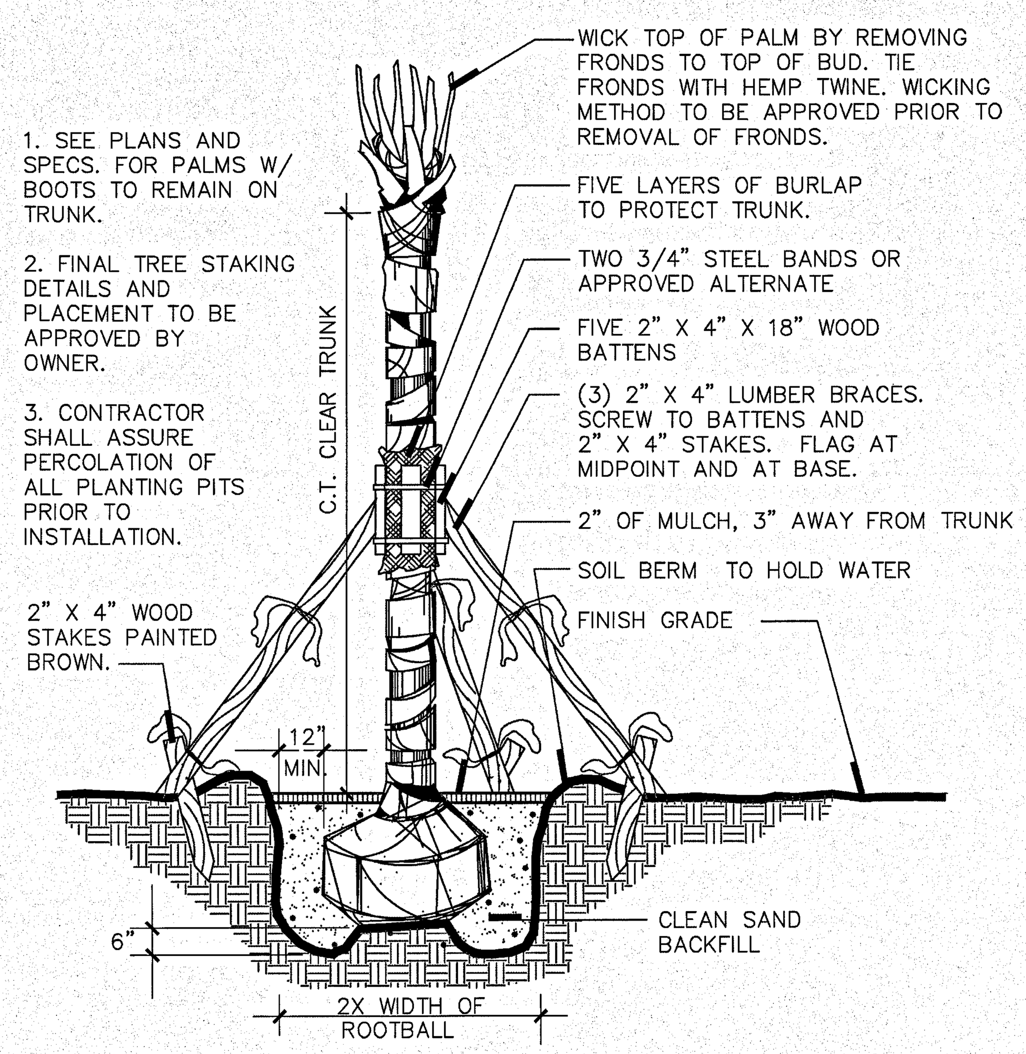

2 / L105 PALM PLANTING DETAIL

SCALE = NTS

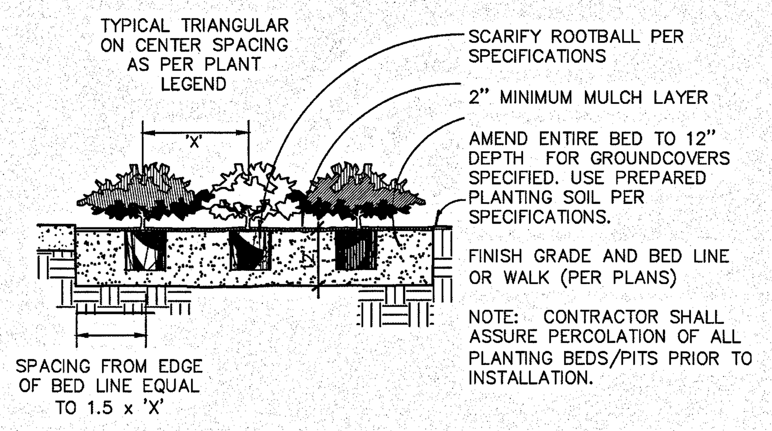

3 / L105 GROUNDCOVER PLANTING DETAIL

SCALE = NTS

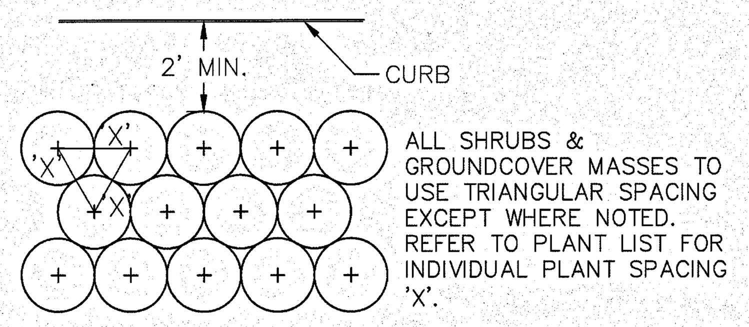

4 / L105 TYPICAL PLANT SPACING DETAIL

SCALE = NTS

TYPICAL LANDSCAPE NOTES

1. LOCATION OF ALL UTILITIES AND BASE INFORMATION IS APPROXIMATE. CONTRACTOR SHALL VERIFY ALL UNDERGROUND UTILITIES AND OBSTRUCTIONS AND COORDINATE WITH THE ENGINEER, IN CONJUNCTION WITH THE OWNER'S ARCHITECT AND LANDSCAPE ARCHITECT PRIOR TO INITIATING INSTALLATION WORK. CONTRACTOR SHALL BE RESPONSIBLE TO REPAIR OR REPLACE ANY DAMAGE COMMITTED TO EXISTING ELEMENTS ABOVE OR BELOW GROUND TO ITS ORIGINAL CONDITION AND TO THE SATISFACTION OF THE ENGINEER, IN CONJUNCTION WITH THE OWNER'S ARCHITECT AND LANDSCAPE ARCHITECT.

2. CONTRACTOR SHALL FIELD ADJUST LOCATION OF PLANT MATERIAL AS NECESSARY TO AVOID DAMAGE TO EXISTING UNDERGROUND UTILITIES AND/OR EXISTING ABOVE GROUND ELEMENTS. ALL CHANGES REQUIRED SHALL BE COMPLETED AT THE CONTRACTOR'S EXPENSE AND SHALL BE COORDINATED WITH THE ENGINEER, IN CONJUNCTION WITH OWNER'S ARCHITECT AND LANDSCAPE ARCHITECT.

3. CONTRACTOR SHALL FIELD STAKE THE LOCATION OF ALL PLANT MATERIAL PRIOR TO INITIATING INSTALLATION FOR THE REVIEW AND APPROVAL OF THE ENGINEER, IN CONJUNCTION WITH THE OWNER'S ARCHITECT AND LANDSCAPE ARCHITECT. THE LOCATION OF ALL PLANT MATERIAL IS SUBJECT TO FIELD CHANGE.

4. LANDSCAPE CONTRACTOR SHALL COORDINATE WORK WITH IRRIGATION CONTRACTOR AND ALL OTHER TRADES.

5. LANDSCAPE CONTRACTOR SHALL BE RESPONSIBLE FOR ALL HAND WATERING AS REQUIRED UNTIL PLANT MATERIALS ARE WELL ESTABLISHED, TO SUPPLEMENT IRRIGATION WATERING AND RAINFALL.

6. THE CONTRACTOR SHALL BE RESPONSIBLE FOR HAND WATERING IN ALL LANDSCAPE AREAS WHERE THE EXISTING OR PROPOSED IRRIGATION IS FOR WHATEVER REASON NOT OPERATING OR NOT OPERATING CORRECTLY.

7. CONTRACTOR SHALL CLEAN THE WORK AREAS AT THE END OF EACH WORKING DAY. RUBBISH AND DEBRIS SHALL BE COLLECTED AND DEPOSITED AS DIRECTED DAILY. ALL MATERIALS, PRODUCTS, AND EQUIPMENT SHALL BE STORED IN AN ORGANIZED FASHION AS DIRECTED BY THE ENGINEER, IN CONJUNCTION WITH THE OWNER OR OWNER'S ARCHITECT AND LANDSCAPE ARCHITECT.

8. ALL PLANT MATERIAL SHALL BE IN FULL AND STRICT ACCORDANCE WITH FLORIDA NO. 1 GRADE, ACCORDING TO THE "GRADES AND STANDARDS FOR NURSERY PLANTS" PUBLISHED BY THE FLORIDA DEPARTMENT OF AGRICULTURE AND CONSUMER SERVICES.

9. CONTRACTOR SHALL REMOVE EXISTING SOD IN ALL AREAS TO BE PLANTED WITH SHRUB/GROUNDCOVERS AND/OR ALL AREAS TO BE MULCHED WITH PINE BARK MULCH.

10. CONTRACTOR SHALL REPLACE SOD IN ALL AREAS WHERE EXISTING VEGETATION IS REMOVED OR RELOCATED, WHERE EXISTING LAWN AREAS ARE DAMAGED BY HIS WORK, AND WHERE NEW VEGETATION IS INSTALLED (UNLESS OTHERWISE NOTED ON PLANS) WITH SAME GRASS SPECIES TO THE SATISFACTION OF THE ENGINEER, IN CONJUNCTION WITH THE OWNER'S ARCHITECT AND LANDSCAPE ARCHITECT. CONTRACTOR SHALL BE RESPONSIBLE FOR FINISH GRADING ALL SUCH AREAS TO BLEND BOTH ELEVATIONS AND SOD INTO EXISTING SURROUNDING LAWN AREAS.

11. THE CONTRACTOR SHALL BEAR ALL COSTS OF TESTING OF SOILS, AMENDMENTS, ETC. ASSOCIATED WITH THE WORK AND INCLUDED IN THE SPECIFICATIONS. PRIOR TO COMMENCEMENT OF THE LANDCAPING WORK THE CONTRACTOR SHALL PROVIDE COMPLETE SOIL TESTS FOR AT LEAST THREE AREAS UNDISTRUBED BY PREVIOUS WORK AND TWO AREAS DISTURBED AND/OR REFILLED. SEE SPECIFICATIONS FOR ADDITIONAL TESTING REQUIREMENTS.

12. THE CONTRACTOR SHALL PROVIDE UNIT PRICES AS REQUESTED WHICH INCLUDE THE TOTAL COST OF THE WORK INCLUDING BUT NOT LIMITED TO ANY AND ALL COSTS FOR EQUIPMENT, MATERIAL, PRODUCTS, OVERHEAD, PROFIT, GUARANTEES, LABOR, INSTALLATION, ETC. TO PROVIDE A COMPLETE JOB AS OUTLINED ON THE DRAWINGS. THE ENGINEER, IN CONJUNCTION WITH THE OWNER SHALL HAVE THE OPTION TO ADD OR DEDUCT FROM THE LUMP SUM BID CONTRACT AMOUNT, BASED ON THE QUOTED UNIT PRICES FOR ANY OR THE ITEMS LISTED IN THE "PLANT LIST".

13. ALL MATERIALS, PRODUCTS, AND EQUIPMENT SHALL BE STORED IN AN ORGANIZED FASHION AS DIRECTED BY THE ENGINEER, IN CONJUNCTION WITH THE OWNER OR OWNER'S ARCHITECT AND LANDSCAPE ARCHITECT.

14. CONTRACTOR SHALL PROTECT EXISTING VEGETATION TO REMAIN BY MEANS APPROVED BY THE ENGINEER, IN CONJUNCTION WITH THE OWNER/OWNER'S ARCHITECT AND LANDSCAPE ARCHITECT AND AS DETAILED IN THE DRAWINGS.

15. CONTRACTOR SHALL CLEAN, PRUNE, AND SHAPE EDGES OF EXISTING VEGETATION AS DIRECTED BY THE ENGINEER, IN CONJUNCTION WITH THE OWNER'S ARCHITECT AND LANDSCAPE ARCHITECT. CREATE SMOOTH BED LINES AROUND EXISTING VEGETATION.

16. CONTRACTOR AND EMPLOYEE VEHICLE PARKING SHALL BE COORDINATED WITH THE ENGINEER, IN CONJUNCTION WITH THE OWNER OR OWNER'S ARCHITECT AND LANDSCAPE ARCHITECT. SHUTTLING OF EMPLOYEES TO THE PROJECT AREAS SHALL BE THE RESPONSIBILITY OF THE CONTRACTOR. CONTRACTOR SHALL NOT DISRUPT OR CONFLICT IN ANY WAY WITH EXISTING TRAFFIC.

17. CONSTRUCTION ACCESS SHALL BE INDICATED BY THE ENGINEER, IN CONJUNCTION WITH THE OWNER. COORDINATION OF HEAVY EQUIPMENT AND MATERIALS SHALL BE THE CONTRACTOR'S RESPONSIBILITY. THE CONTRACTOR SHALL BE RESPONSIBLE FOR SCHEDULING AND COORDINATION OF WORK WITH OTHER TRADES AND THE OWNER OR OWNER'S ARCHITECT AND LANDSCAPE ARCHITECT.

18. THE CONTRACTOR SHALL TAKE WHATEVER MEANS THAT MAY BE NECESSARY TO FULLY UNDERSTAND ALL THE ACCESS ROUTES, CONSTRUCTION SCHEDULES IN ORDER TO PROVIDE A COMPLETE AND FINISHED PROJECT ON SCHEDULE.

19. CONTRACTOR SHALL ENSURE POSITIVE DRAINAGE TO DRAINAGE STRUCTURES AS INDICATED ON THE GRADING DRAWINGS. SEE CIVIL PLANS.

20. ALL TREE CALIPER SIZES NOTED ARE MINIMUM. INCREASE SIZE OF OTHER SPECIFICATIONS AS REQUIRED IF NECESSARY TO PROVIDE PLANT SIZE AND SPECIFICATIONS.

21. ALL CONTAINER SIZES NOTED ARE MINIMUM. INCREASE SIZE IF NECESSARY TO PROVIDE PLANT SIZE AND SPECIFICATIONS. ALL HEIGHT AND SPREAD SPECIFICATIONS ARE MINIMUM.

22. SHRUB AND GROUNDCOVER BED QUANTITIES ARE INDICATED FOR EACH PLANT BED. ALL PLANT QUANTITIES FOR PROPOSALS SHALL BE DERIVED SOLELY FROM DRAWINGS AND SPECIFICATIONS.

23. SHRUB AND GROUND COVER SPACING IS INDICATED ON THE PLANT LIST, UNDER COMMENTS, FOR ALL PLANTS AND SHALL APPLY FOR ALL "MASS PLANTING". PLANT ACCENT SHRUBS AND TREES AS SHOWN ON LANDSCAPE PLANTING PLANS WHEN INDIVIDUAL PLANTS ARE DELINEATED.

24. SEE PLANT LIST DETAILS AND SPECIFICATIONS FOR FURTHER PLANTING INFORMATION.

5 / L105 LANDSCAPE NOTES

SYM	ZONE		DATE	APPROVED

REVISIONS

DATE APPROVED

hhi DESIGN — Better Living by Design!

planning, landscape architecture & environmental graphics
135 west central blvd, suite 450
orlando, fl 32801
phone: 407.422.1449
florida license LCC000027

SIGNATURES	DATE
DRAWN Christi Jackson	12.18.13
CHECKED Ginger Corless	12.18.13
SUBMITTED: ARCH/ENG OF RECORD Randy Raiman	12/18/13
ST of LICENSURE: FL LICENSE NO: LA 00000460	
APPROVED CHRISTI JACKSON	12/18/13
K. Miller	12/19/13

NATIONAL AERONAUTICS AND SPACE ADMINISTRATION
JOHN F. KENNEDY SPACE CENTER, NASA
KENNEDY SPACE CENTER, FLORIDA

KSC CENTRAL CAMPUS
REPLACEMENT HEADQUARTERS BUILDING
PHASE 1
VOL. 1 OF 4

LANDSCAPE DETAILS

FILE NO.	SIZE	DWG. NO.
C -12070.00	F	79K39622 VOL 2

PCN. NO.98745.1a SHEET 88

L105 LANDSCAPE DETAILS

L105

NOTICE: When Government drawings, specifications, or other data are used for any purpose other than in connection with a definitely related Government procurement operation, the United States Government thereby incurs no responsibility nor obligation whatsoever; and the fact that the Government may have formulated, furnished, or in any way supplied the said drawings, specifications or other data is not to be regarded by implication or otherwise as in any manner licensing the holder or any other person or corporation, or conveying any rights or permission to manufacture, use, or sell any patented invention that may in any way be related thereto.

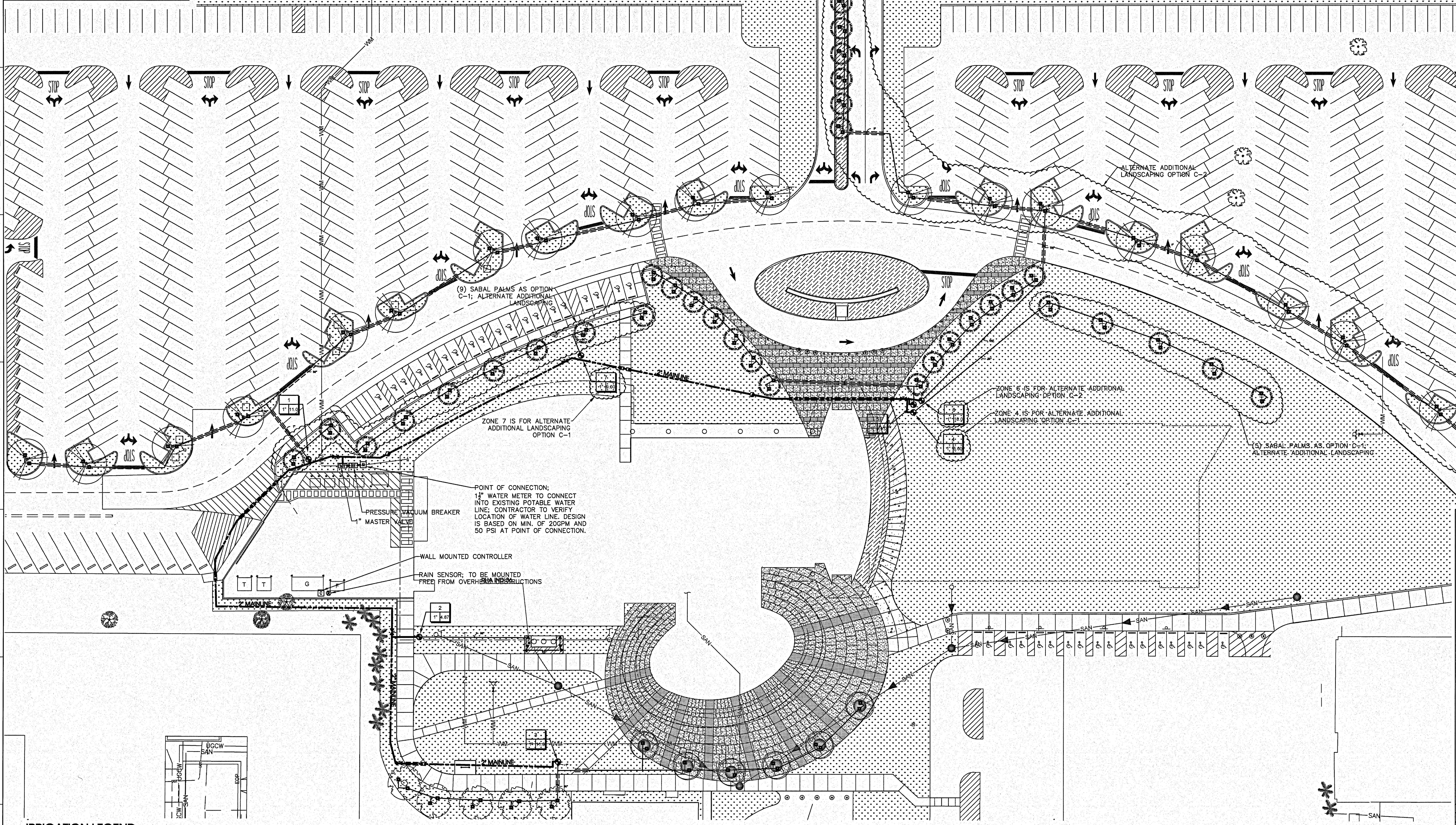

IRRIGATION LEGEND

SYMBOL	MANUFACTURER/MODEL
◀	Rain Bird 1800 15 Strip Series
◁	Rain Bird 1800 15 Strip Series
◘	Rain Bird 1800-1400 Flood

SYMBOL	MANUFACTURER/MODEL/DESCRIPTION
◕	Rain Bird PESB-PRS-D Electric Remote Control Scrubber Valve, with pressure regulator
⬢	Rain Bird 44RC 1" Quick Coupler Valve, two piece body
⧗	Matco-Norca 513T 3/4"-2" Bronze Gate Valve, Full Port, Heavy Duty, Non-Rising Stem. IPS, Wheel Handle. Same size as mainline pipe.
MV	Rain Bird PESB-PRS-D 1" Master Valve
BF	Wilkins 720A 3/4" Pressure Vacuum Breaker
C	Rain Bird ESP8LXMEF 8 Station Capable Commercial Controller. Mounted on a Plastic Wall Mount. Flow Sensing and Water Management Capabilities
Ⓡ	Rain Bird RSD-CEx Rain Sensing Device, conduit mount. With threaded adapter, extension wire.
M	Water Meter 1-1/2" Potable Water Line
———	Irrigation Lateral Line: PVC Class 200
—·—·—	Irrigation Mainline: PVC Schedule 40
==========	Pipe Sleeve: PVC Class 200 Typical pipe sleeve for irrigation pipe. Pipe sleeve size shall allow for irrigation piping and their related couplings to easily slide through sleeving material. Extend sleeves 18 inches beyond edges of paving or construction.

Valve Callout
- # — Valve Number
- # — Valve GPM
- #" — Valve Size

NOTE: ALL NEW TREES/GROUNDCOVER TO RECEIVE TEMPORARY IRRIGATION IN THE FORM OF AN UNDERGROUND SYSTEM. SYSTEM WILL BE CAPPED AND ABANDONED AFTER TREE/GROUNDCOVER ESTABLISHMENT, A MINIMUM OF 2 YEARS.

NOTE: REFER TO TECHNICAL SPECIFICATIONS FOR FURTHER DETAILS

SEE SHEET L107 FOR IRRIGATION DETAILS

N

GRAPHIC SCALE
0 30 60 90
SCALE IN FEET
1" = 30'-0"

L106 IRRIGATION PLAN
1" = 30'-0"

SYM	ZONE	REVISIONS	DATE	APPROVED

hhi DESIGN — Better Living by Design!
planning, landscape architecture & environmental graphics
135 west central blvd, suite 450
orlando, fl 32801
phone: 407.422.1449
florida license LCC000027

SIGNATURES	DATE
DRAWN Christi Jackson	12.18.13
CHECKED Ginger Corless	12.18.13
SUBMITTED: ARCH/ENG OF RECORD Randy Raiman ST of LICENSURE: FL LICENSE NO: LA 00000460	12/18/13
APPROVED CHRISTI JACKSON	12/18/13
K. Miller	12/19/13

NATIONAL AERONAUTICS AND SPACE ADMINISTRATION
JOHN F. KENNEDY SPACE CENTER, NASA
KENNEDY SPACE CENTER, FLORIDA

KSC CENTRAL CAMPUS
REPLACEMENT HEADQUARTERS BUILDING
PHASE 1
VOL. 1 OF 4

IRRIGATION PLAN

FILE NO.	SIZE	DWG. NO.
C -12070.00	F	79K39622 VOL 2

PCN. NO.98745.1a
SHEET 89

L106

KSC FORM 1-11 (3/76)(C/G 3/94)

NOTICE: When Government drawings, specifications, or other data are used for any purpose other than in connection with a definitely related Government procurement operation, the United States Government thereby incurs no responsibility nor obligation whatsoever; and the fact that the Government may have formulated, furnished, or in any way supplied the said drawings, specifications or other data is not to be regarded by implication or otherwise as in any manner licensing the holder or any other person or corporation, or conveying any rights or permission to manufacture, use, or sell any patented invention that may in any way be related thereto.

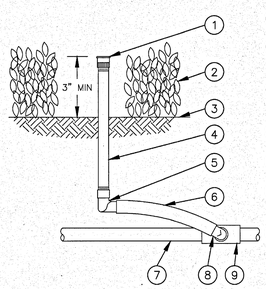

1. PRESSURE COMPENSATING FULL CIRCLE BUBBLER: RAIN BIRD 1400 OR APPROVED EQUAL
2. PLANT MATERIAL
3. FINISH GRADE/TOP OF MULCH
4. UV RADIATION RESISTANT 1/2 INCH PVC SCH 80 NIPPLE (LENGTH AS REQUIRED)
5. 1/2–INCH FEMALE NPT x 0.490–INCH BARB ELBOW: RAIN BIRD MODEL SBFE–050
6. SWING PIPE, 12–INCH LENGTH: RAIN BIRD MODEL SP–100
7. PVC LATERAL PIPE
8. 1/2–INCH MALE NPT x .490–INCH BARB ELBOW: RAIN BIRD MODEL SBE–050
9. PVC SCH 40 TEE OR ELL

1 L107 TREE BUBBLER DETAIL

SCALE = NTS

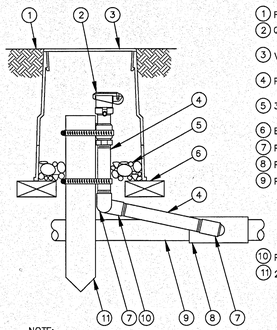

1. FINISH GRADE/TOP OF MULCH
2. QUICK–COUPLING VALVE:
3. VALVE BOX WITH COVER:
4. PVC SCH 80 NIPPLE (LENGTH AS REQUIRED)
5. 3–INCH MINIMUM DEPTH OF 3/4–INCH WASHED GRAVEL
6. BRICK (1 OF 2)
7. PVC SCH 40 STREET ELL
8. PVC SCH 40 TEE OR ELL
9. PVC MAINLINE PIPE
10. PVC SCH 40 ELL
11. 2" x 2" GALVANIZED STEEL STAKE W/ STAINLESS STEEL GEAR CLAMPS OR EQUIVALENT SUPPORT SYSTEM

NOTE:
1. FURNISH FITTINGS AND PIPING NOMINALLY SIZED IDENTICAL TO NOMINAL QUICK COUPLING VALVE INLET SIZE.

2 L107 QUICK COUPLER VALVE DETAIL

SCALE = NTS

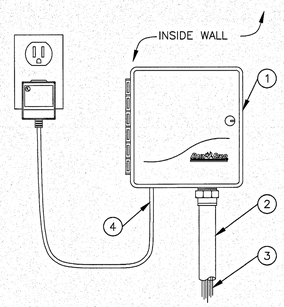

1. HYBRID CONTROLLER: RAIN BIRD ESP–LXi PLUS SERIES OR APPROVED EQUAL WALL MOUNT
2. 1.5–INCH PVC SCH 40 CONDUIT AND FITTINGS
3. WIRES TO REMOTE CONTROL VALVES
4. 117 VAC, 60 HZ EXTERNAL PLUG–IN TRANSFORMER

3 L107 CONTROLLER DETAIL

SCALE = NTS

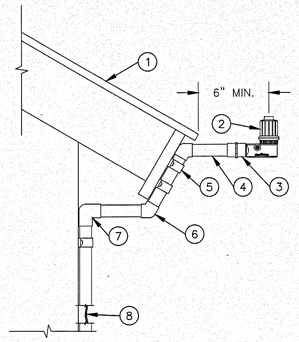

1. EAVE OF BUILDING OR TOP OF WALL
2. RAIN SENSOR: RAIN BIRD RSD–CEx OR APPROVED EQUAL
3. FEMALE ADAPTER (SLIP X FIPT)
4. 3/4–INCH CLASS 200 PVC PIPE
5. SECURE WITH APPROVED PIPE ANCHOR (1 OF 3)
6. 45° EL (SLIP X SLIP) (1 OF 2)
7. 90° EL (SLIP X SLIP)
8. WIRE TO IRRIGATION CONTROLLER

4 L107 RAIN SENSOR DETAIL

SCALE = NTS

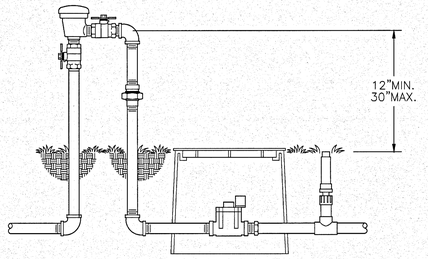

5 L107 PRESSURE VACUUM BREAKER DETAIL

SCALE = NTS

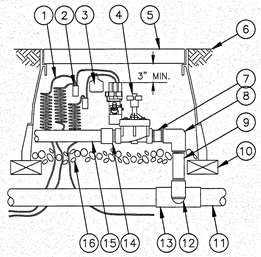

1. 30–INCH LINEAR LENGTH OF WIRE, COILED
2. WATERPROOF CONNECTION RAIN BIRD SPLICE–1 (1 OF 2)
3. ID TAG: RAIN BIRD VID SERIES
4. REMOTE CONTROL VALVE: RAIN BIRD PESB–PRS–D OR APPROVED EQUAL
5. VALVE BOX WITH COVER: RAIN BIRD VB–STD
6. FINISH GRADE/TOP OF MULCH
7. PVC SCH 80 NIPPLE (CLOSE)
8. PVC SCH 40 ELL
9. PVC SCH 80 NIPPLE (LENGTH AS REQUIRED)
10. BRICK (1 OF 4)
11. PVC MAINLINE PIPE
12. SCH 80 NIPPLE (2–INCH LENGTH, HIDDEN) AND SCH 40 ELL
13. PVC SCH 40 TEE OR ELL
14. PVC SCH 40 MALE ADAPTER
15. PVC LATERAL PIPE
16. 3.0–INCH MINIMUM DEPTH OF 3/4–INCH WASHED GRAVEL

6 L107 ZONE VALVE DETAIL

SCALE = NTS

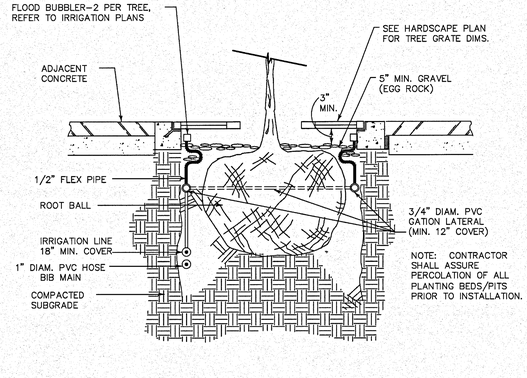

7 L107 TREE WELL IRRIGATION DETAIL

SCALE = NTS

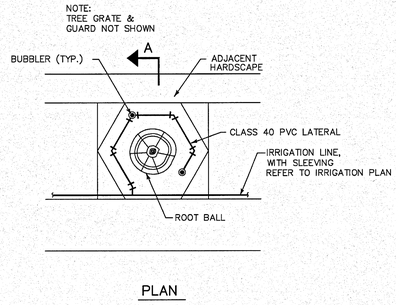

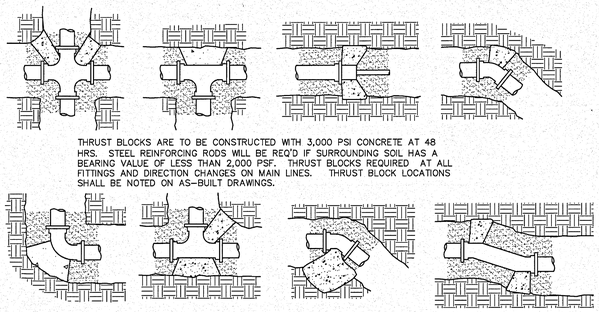

THRUST BLOCKS ARE TO BE CONSTRUCTED WITH 3,000 PSI CONCRETE AT 48 HRS. STEEL REINFORCING RODS WILL BE REQ'D IF SURROUNDING SOIL HAS A BEARING VALUE OF LESS THAN 2,000 PSF. THRUST BLOCKS REQUIRED AT ALL FITTINGS AND DIRECTION CHANGES ON MAIN LINES. THRUST BLOCK LOCATIONS SHALL BE NOTED ON AS–BUILT DRAWINGS.

8 L107 TYP. THRUST BLOCKS DETAIL

SCALE = NTS

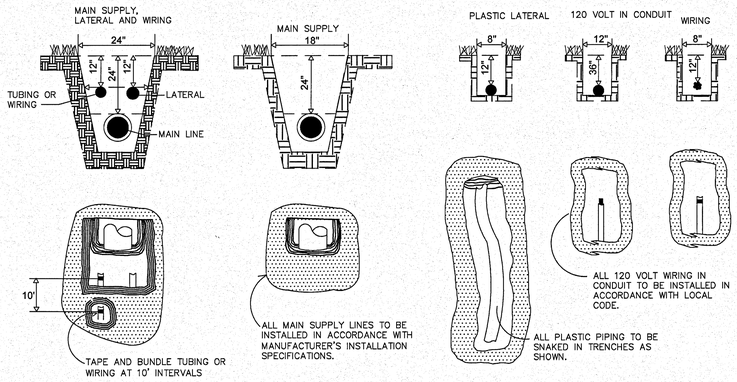

9 L107 TYP. TRENCHING DETAIL

SCALE = NTS

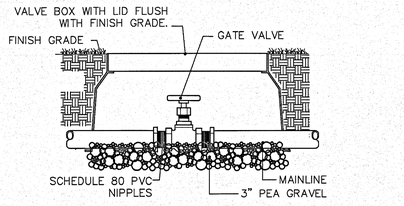

10 L107 ISOLATION GATE VALVE DETAIL

SCALE = NTS

SYM	ZONE	REVISIONS	DATE	APPROVED

SIGNATURES	DATE
DRAWN Christi Jackson	12.18.13
CHECKED Ginger Cordes	12.18.13
SUBMITTED BY ENGINEER OF RECORD Randy Rinard STATE OF LICENSURE: FL	12/18/13
LICENSE NO: LA 0000460	
APPROVED CHRISTI JACKSON	12/18/13
K. Miller	12/19/13

hhi DESIGN
Better Living by Design!
planning, landscape architecture & environmental graphics
115 west central blvd, suite 450 orlando, fl 32801 phone: 407.422.1449 florida license LCC0000027

NATIONAL AERONAUTICS AND SPACE ADMINISTRATION
JOHN F. KENNEDY SPACE CENTER, NASA
KENNEDY SPACE CENTER, FLORIDA

KSC CENTRAL CAMPUS
REPLACEMENT HEADQUARTERS BUILDING
PHASE 1
VOL. 1 OF 4

IRRIGATION DETAILS

FILE NO.	SIZE	DWG. NO.
C -12070.00	F	79K39622 VOL 2

PCN. NO. 98745.1a SHEET 90

L107 IRRIGATION DETAILS

L107

KSC FORM 1–11 (3/76)(C/G 3/94)

NOTICE: When Government drawings, specifications, or other data are used for any purpose other than in connection with a definitely related Government procurement operation, the United States Government thereby incurs no responsibility nor obligation whatsoever; and the fact that the Government may have formulated, furnished, or in any way supplied the said drawings, specifications or other data is not to be regarded by implication or otherwise as in any manner licensing the holder or any other person or corporation, or conveying any rights or permission to manufacture, use, or sell any patented invention that may in any way be related thereto.

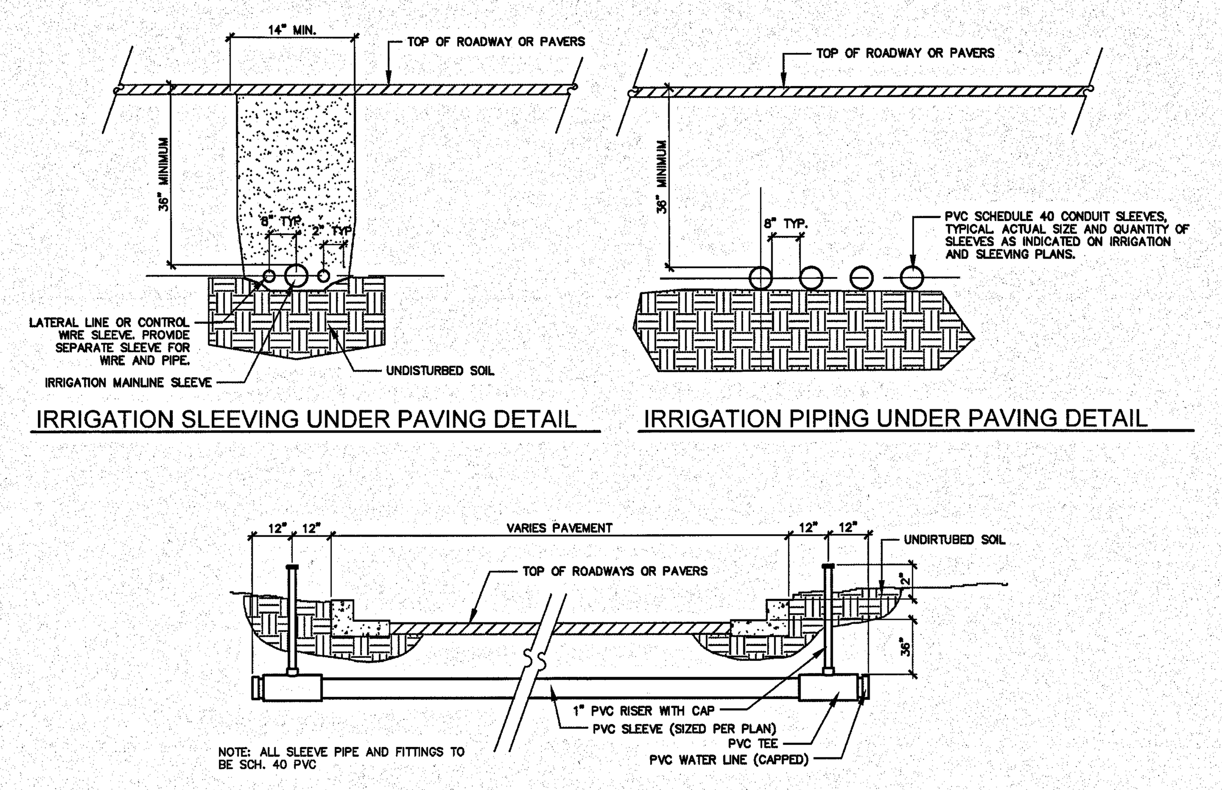

1 L108 IRRIGATION SLEEVING UNDER PAVING DETAIL

SCALE = NTS

TYPICAL IRRIGATION NOTES

1. UNLESS OTHERWISE NOTED, THE LIMITS OF CONSTRUCTION ARE AS INDICATED ON DRAWINGS.

2. ANY LIMIT OF WORK TREES TO REMAIN SHALL BE VERIFIED IN THE FIELD AND APPROVED BY THE OWNER'S REPRESENTATIVE.

3. ALL PROJECT BASE INFORMATION PROVIDED BY THE OWNER.

4. REFER TO ENGINEERING DRAWINGS FOR ALL UTILITY LOCATIONS, AND VERIFY IN THE FIELD PRIOR TO COMMENCING WORK. REFER TO ENGINEERING DRAWINGS FOR FINAL GRADING AND SPOT ELEVATIONS. VERIFY IN THE FIELD PRIOR TO CONSTRUCTION.

5. THE CONTRACTOR, PRIOR TO BEGINNING ANY UNDERGROUND EXCAVATION, DIGGING, OR BORING MUST FIRST OBTAIN ALL REQUIRED PERMITS. WORK IS NOT AUTHORIZED PRIOR TO THE ISSUANCE OF A PERMIT(S). THE CONTRACTOR SHALL COMPLY WITH FL 77-153 REGARDING NOTIFICATIONS OF EXISTING GAS AND OIL PIPELINE COMPANY OWNERS. EVIDENCE OF SUCH NOTICE SHALL BE FURNISHED TO THE OWNER PRIOR TO EXCAVATING. THE CONTRACTOR SHALL COORDINATE FULLY WITH THE OWNER FOR ALL EXCAVATION PERMITS AND NOTIFICATIONS NECESSARY PRIOR TO INITIATING ALL WORK.

6. THE LOCATION OF ALL CONTROLLERS SHALL BE APPROVED BY THE OWNERS REPRESENTATIVE PRIOR TO INSTALLATION.

7. THE CONTRACTOR SHALL BE RESPONSIBLE TO FULLY COORDINATE THE INSTALLATION, LOCATION, AND CONNECTION OF THE POWER SOURCE AND SERVICE WITH THE OWNER'S REPRESENTATIVE PRIOR TO INSTALLATION.

8. THE CONTRACTOR SHALL BE RESPONSIBLE TO FULLY COORDINATE THE INSTALLATION, LOCATION, AND CONNECTION OF THE TELEPHONE COMMUNICATION WIRE AND SERVICE WITH THE OWNER'S REPRESENTATIVE AND THE COMMUNICATIONS PROVIDER PRIOR TO INSTALLATION.

9. THE CONTRACTOR SHALL BE RESPONSIBLE TO FULLY COORDINATE AND INTEGRATE THE OPERATION SCHEDULE OF THE IRRIGATION CONTROL SYSTEM PER THE OWNER'S REPRESENTATIVE'S DIRECTION AND APPROVAL.

10. FIELD ALTERATIONS MADE IN THE IRRIGATION CONTRACT DRAWINGS MUST BE IN THE BEST INTEREST OF THE PLANT MATERIAL, SOD AND LANDSCAPE IRRIGATION SYSTEM. CHANGES MADE BY THE IRRIGATION CONTRACTOR WHICH ARE DEEMED BY THE OWNER'S REPRESENTATIVE NOT IN CONFORMANCE WITH THE ABOVE CRITERIA SHALL BE REMOVED AND REPLACED AT THE IRRIGATION CONTRACTOR'S EXPENSE. IF QUESTIONS ARISE AS TO THE BEST WAY TO COMPLETE A FIELD ALTERATION, CONTACT THE OWNER'S REPRESENTAIVE FOR APPROVAL

11. THE LOCATION OF ALL PLANT MATERIAL SHALL BE FIELD STAKED BY THE CONTRACTOR FOR APPROVAL BY THE OWNERS REPRESENTATIVE PRIOR TO INSTALLATION OF THE IRRIGATION SYSTEM.

12. AUTOMATIC CONTROL TIMER LOCATION TO BE VERIFIED WITH OWNER'S REPRESENTATIVE.

13. RISER-MOUNTED SPRAY HEADS SHALL BE UTILIZED AS REQUIRED:
A. IN PLANTING BEDS ADJACENT TO BUILDING OR STRUCTURES ONLY.
B. TO BE INSTALLED 6" ABOVE PLANT HEIGHT AT TIME OF PLANTING.
C. RISER TO BE OF SCHEDULE 40 PVC AND PAINTED FLAT BLACK.

14. INSTALL ALL PIPING SHOWN BETWEEN DIFFERENT PIPE SIZES AS THE LARGER SIZED PIPE.

15. INSTALL ALL PIPING TO INDIVIDUAL BUBBLERS AS 1/2"

16. EACH TYPE OF ZONE IS TO BE PIPED SEPARATELY. DO NOT INTERCONNECT DIFFERENT TYPES OF ZONES.

17. ANY IRRIGATION ITEMS NORMALLY INSTALLED IN LANDSCAPE AREAS THAT ARE SHOWN OUTSIDE OF LANDSCAPE AREAS OR OUTSIDE OF PROPERTY LINES ARE SHOWN AS SUCH FOR GRAPHIC CLARITY ONLY. INSTALL THESE ITEMS INSIDE OF PROPERTY LINES AND IN LANDSCAPE AREAS.

18. VERIFY GALLONAGE AND PRESSURE AVAILABILITY AND REPORT ANY DISCREPANCIES TO THE LANDSCAPE ARCHITECT BEFORE COMMENCING WITH THE INSTALLATION.

19. PROVIDE PROOF TO THE LANDSCAPE ARCHITECT THAT ALL AVAILABLE MAINTENANCE MANUALS FOR EACH OF THE PRODUCTS INCLUDED IN THIS INSTALLATION HAVE BEEN PROVIDED TO THE OWNER OR OWNER'S REPRESENTATIVE.

20. VALVES ARE SHOWN OUTSIDE OF PLANT BEDS FOR GRAPHIC CLARITY. INSTALL ALL VALVES AND VALVE BOXES IN SHRUB OR GROUNDCOVER BEDS WHERE THE VALVES ARE SHOWN NEAR BEDS THAT ARE OUTSIDE OF THE "TREE SAVE" AREAS.

21. THE CONTRACTORS ARE RESPONSIBLE FOR FAMILIARIZING THEMSELVES WITH ALL CODES, INCLUDING THOSE REGARDING SEPARATION DISTANCE MINIMUMS FOR POTABLE WATER VERSUS EFFLUENT WATER AND SHALL INSTALL THE SYSTEM IN ACCORDANCE WITH THOSE CODES.

2 L108 IRRIGATION NOTES

SYM	ZONE		DATE	APPROVED

REVISIONS

DATE APPROVED

hhi DESIGN Better Living by Design!

planning, landscape architecture & environmental graphics
135 west central blvd, suite 450
orlando, fl 32801
phone: 407.422.1449
florida license LCC000027

SIGNATURES	DATE
DRAWN Christi Jackson	12.18.13
CHECKED Ginger Corless	12.18.13
SUBMITTED: ARCH/ENG OF RECORD Randy Raiman ST of LICENSURE: FL LICENSE NO: LA 00000460	12/18/13
APPROVED CHRISTI JACKSON	12/18/13
K. Miller	12/19/13

NATIONAL AERONAUTICS AND SPACE ADMINISTRATION
JOHN F. KENNEDY SPACE CENTER, NASA
KENNEDY SPACE CENTER, FLORIDA

KSC CENTRAL CAMPUS
REPLACEMENT HEADQUARTERS BUILDING
PHASE 1
VOL. 1 OF 4

IRRIGATION DETAILS AND NOTES

FILE NO.	SIZE	DWG. NO.
C -12070.00	F	79K39622 VOL 2

PCN. NO.98745.1a | SHEET 91

L108 IRRIGATION DETAILS AND NOTES

L108

KSC FORM 1-11 (3/76)(C/G 3/94)

NOTICE: When Government drawings, specifications, or other data are used for any purpose other than in connection with a definitely related Government procurement operation, the United States Government thereby incurs no responsibility nor obligation whatsoever; and the fact that the Government may have formulated, furnished, or in any way supplied the said drawings, specifications or other data is not to be regarded by implication or otherwise as in any manner licensing the holder or any other person or corporation, or conveying any rights or permission to manufacture, use, or sell any patented invention that may in any way be related thereto.

GENERAL STRUCTURAL NOTES

PART I - DESIGN CRITERIA

A. GENERAL BUILDING CODE

1. THE CONSTRUCTION DOCUMENTS ARE BASED ON THE REQUIREMENTS OF THE FLORIDA BUILDING CODE 2010 WITH 2009 SUPPLEMENTS.

B. ELEVATOR LOADS

1. MACHINE BEAM, CAR BUFFER, COUNTERWEIGHT BUFFER, AND GUIDE RAIL LOADS: ASSUMED ELEVATOR LOADS TO THE SUPPORTING STRUCTURE ARE SHOWN ON THE DRAWINGS, INCLUDING MACHINE BEAM REACTIONS, CAR BUFFER REACTIONS, COUNTERWEIGHT BUFFER REACTIONS, AND HORIZONTAL AND VERTICAL GUIDE RAIL LOADS. THE GENERAL CONTRACTOR SHALL SUBMIT TO THE STRUCTURAL ENGINEER FINAL ELEVATOR SHOP DRAWINGS SHOWING ALL LOADS TO THE STRUCTURE PRIOR TO THE INSTALLATION OF THE ELEVATORS FOR VERIFICATION OF LOAD CARRYING CAPACITY

C. WIND LOADS

1. WIND PRESSURES ARE BASED ON THE PROVISIONS OF THE FLORIDA BUILDING CODE WHICH REFER TO THE AMERICAN SOCIETY OF CIVIL ENGINEERS, MINIMUM DESIGN LOADS FOR BUILDINGS AND OTHER STRUCTURES, ASCE 7-10 AND THE FOLLOWING CRITERIA:
   a. ULTIMATE DESIGN WIND SPEED (VULT): 150 MPH (3-SECOND GUST)
   b. NOMINAL DESIGN WIND SPEED (VASD): 116 MPH (3-SECOND GUST)
   c. BUILDING RISK CATEGORY: II
   d. WIND EXPOSURE CATEGORY: C
   e. INTERNAL PRESSURE COEFFICIENT (GCPI): +0.18/-0.18
2. THIS STRUCTURE IS LOCATED IN A WIND-BORNE DEBRIS REGION AND HAS BEEN DESIGNED AS ENCLOSED. IMPACT-RESISTANT EXTERIOR GLAZING OR IMPACT-RESISTANT COVERING OVER EXTERIOR GLAZING IS REQUIRED FOR GLAZING PER SECTION 1609.1.2 OF THE FLORIDA BUILDING CODE. REFER TO THE ARCHITECTURAL DRAWINGS FOR DETAILS FOR ATTACHMENT OF THE IMPACT-RESISTANT EXTERIOR GLAZING OR IMPACT-RESISTANT COVERING OVER EXTERIOR GLAZING TO THE STRUCTURE.
3. WIND PRESSURES USED FOR THE DESIGN OF COMPONENTS AND CLADDING ARE TABULATED BELOW. REFER TO S010 THROUGH S013 FOR WIND LOADING DIAGRAMS.

CLADDING TYPE	LOCATION OR ZONE	EFFECTIVE WIND AREA (SQ-FT)	WIND LOAD (PSF)
WALL	INTERIOR	10	+71/-71
WALL	INTERIOR	20	+71/-71
WALL	INTERIOR	50	+66/-68
WALL	INTERIOR	100	+61/-65
WALL	EDGE	10	+71/-131
WALL	EDGE	20	+71/-131
WALL	EDGE	50	+66/-116
WALL	EDGE	100	+61/-104
PARAPET	INTERIOR	10	+211/-119
PARAPET	INTERIOR	20	+203/-119
PARAPET	INTERIOR	50	+187/-109
PARAPET	INTERIOR	100	+174/-102
PARAPET	EDGE	10	+211/-178
PARAPET	EDGE	20	+203/-178
PARAPET	EDGE	50	+187/-158
PARAPET	EDGE	100	+174/-142
ROOF	INTERIOR	10	+16/-104
ROOF	INTERIOR	20	+16/-98
ROOF	INTERIOR	50	+16/-91
ROOF	INTERIOR	100	+16/-85
ROOF	EDGE	10	+16/-164
ROOF	EDGE	20	+16/-156
ROOF	EDGE	50	+16/-145
ROOF	EDGE	100	+16/-136
ROOF	CORNER	10	+16/-164
ROOF	CORNER	20	+16/-156
ROOF	CORNER	50	+16/-145
ROOF	CORNER	100	+16/-136
OVERHANG	INTERIOR	10	+16/-112
OVERHANG	INTERIOR	20	+16/-110
OVERHANG	INTERIOR	50	+16/-108
OVERHANG	INTERIOR	100	+16/-106
OVERHANG	CORNER	10	+16/-112
OVERHANG	CORNER	20	+16/-110
OVERHANG	CORNER	50	+16/-108
OVERHANG	CORNER	100	+16/-106

NOTES:
a. WIDTH OF END ZONE/EDGE/CORNER STRIP: 11 FEET
b. COMPONENT AND CLADDING PRESSURES ACT NORMAL TO THE SURFACE. POSITIVE PRESSURES ACT TOWARDS THE SURFACE AND NEGATIVE PRESSURES ACT AWAY FROM THE SURFACE.
c. DESIGN PRESSURE FOR COMPONENTS AND CLADDING SHALL NOT BE LESS THAN 16 PSF ACTING IN EITHER DIRECTION NORMAL TO THE SURFACE.
d. THE EFFECTIVE WIND AREA IS THE SPAN LENGTH MULTIPLIED BY AN EFFECTIVE WIDTH THAT NEED NOT BE LESS THAN ONE-THIRD THE SPAN LENGTH. FOR CLADDING FASTENERS, THE EFFECTIVE WIND AREA SHALL NOT BE GREATER THAN THE AREA THAT IS TRIBUTARY TO AN INDIVIDUAL FASTENER.
e. THE DESIGN PRESSURES LISTED ABOVE ARE CALCULATED USING A VALUE OF KD OF 0.85. THE VALUES SHALL BE INCREASED BY 18% IF LOAD COMBINATIONS SPECIFIED IN ASCE 7-10 ARE NOT USED IN DESIGN.

PART I - DESIGN CRITERIA (CONTINUED)

D. FUTURE EXPANSION

1. PROVISION HAS BEEN MADE IN THE STRUCTURAL DESIGN OF PHASE I FOR THE FOLLOWING FUTURE EXPANSION: PHASE II EXPANSION

E. RESTRAINED CONSTRUCTION CLASSIFICATION

1. IN ACCORDANCE WITH ASTM E 119, ALL FLOOR CONSTRUCTION IS CLASSIFIED AS RESTRAINED CONSTRUCTION.

F. DESIGN LOAD FOR RESTROOM ACCESSORIES

1. GRAB BARS, TUB AND SHOWER SEATS, FASTENERS, AND MOUNTING DEVICES SHALL BE DESIGNED TO RESIST A CONCENTRATED LOAD OF 250 POUNDS AT ANY LOCATION AND IN ANY DIRECTION.

G. HANDRAILS AND GUARDS

1. THE HANDRAIL ASSEMBLIES AND GUARDS SHALL BE DESIGNED FOR 50 PLF, OR A CONCENTRATED LOAD OF 200 POUNDS AT ANY POINT, APPLIED IN ANY DIRECTION AT THE TOP AND TO TRANSFER THIS LOAD THROUGH THE SUPPORTS TO THE STRUCTURE. THESE LOADS NEED NOT BE ASSUMED TO ACT CONCURRENTLY.

H. ROOFTOP EQUIPMENT ANCHORAGE

1. ALL ROOF TOP EQUIPMENT CURBS, ROOF TOP MECHANICAL EQUIPMENT, EQUIPMENT TIE DOWNS, AND CONNECTIONS OF ALL EQUIPMENT TO BUILDING STRUCTURE FOR WIND LOADING ARE TO BE DESIGNED AND ENGINEERED BY A REGISTERED SPECIALTY ENGINEER RETAINED BY THE MECHANICAL EQUIPMENT SUPPLIER. SIGNED AND SEALED DRAWINGS AND CALCULATIONS ARE TO BE SUBMITTED TO THE GOVERNMENT FOR REVIEW AND APPROVAL. THE EQUIPMENT MANUFACTURER SHALL PROVIDE THE ATTACHMENT OF THE UNIT TO THE STRUCTURE AND SUBMIT TO THE ENGINEER LOADS, LOCATIONS, AND METHODS OF ATTACHMENT. THE STRUCTURAL ENGINEER WILL MAKE PROVISIONS IN THE DESIGN OF THE PRIMARY STRUCTURAL FRAME TO ACCOMMODATE THE LOADS AND ATTACHMENTS SUBMITTED BY THE MANUFACTURER.

PART II - FOUNDATION

A. GEOTECHNICAL REPORT

1. FOUNDATION DESIGN IS BASED ON THE FOUNDATION GEOTECHNICAL INVESTIGATION REPORT AS TITLED: "SUBSURFACE SOIL EXPLORATION AND GEOTECHNICAL ENGINEERING EVALUATION KSC CENTRAL CAMPUS DESIGN - PHASE I KENNEDY SPACE CENTER, FLORIDA" JEA PROJECT No. 08930-001-020
2. THE GEOTECHNICAL REPORT IS AVAILABLE TO THE GENERAL CONTRACTOR UPON REQUEST TO THE CONTRACTING OFFICER. THE INFORMATION INCLUDED THEREIN MAY BE USED BY THE GENERAL CONTRACTOR FOR HIS GENERAL INFORMATION ONLY. THE GOVERNMENT, ARCHITECT, AND ENGINEER WILL NOT BE RESPONSIBLE FOR THE ACCURACY OR APPLICABILITY OF SUCH DATA THEREIN.

B. SHALLOW FOUNDATION TYPE

1. SPREAD FOOTING
   a. DESIGN PRESSURES
      1) TOTAL LOAD: 2,500 PSF NET PRESSURE
      2) SUSTAINED LOAD: 2,500 PSF NET PRESSURE
      3) ALLOWABLE PRESSURES ARE INCREASED 30% FOR COMBINED GRAVITY AND WIND LOADS.

C. PRECAST DRIVEN PILES
1. PILE CAPACITY HAS BEEN BASED ON REVISED GEOTECHNICAL REPORT DATED JANUARY 25, 2013 BY ARDAMAN AND ASSOCIATES, INC.:
   a. NET PILE LENGTH = 90 FT
   b. PILE DIMENSIONS = 18 INCHES SQ PRECAST PILES
   c. ALLOW. COMPRESSION = 90 TONS PER PILE
   d. ALLOW. TENSION = 45 TONS PER PILE
   e. ALLOW. SHEAR = 10 TONS PER PILE
   e. MIN. COMPRESSIVE STRENGTH = 5,000 psi (28 DAYS)
   f. MIN. PILE SPACING IS LIMITED TO 2.5 PILE WIDTHS (PER ARDAMAN CORRESPONDENCE DATED 2/23/2013)
2. THE GENERAL CONTRACTOR SHALL ENSURE THAT ALL CONSTRUCTION METHODS USED WILL NOT CAUSE DAMAGE TO THE ADJACENT BUILDINGS AND PROPERTY. THIS SHALL INCLUDE ALL FOUNDATION INSTALLATION.
3. THE GENERAL CONTRACTOR IS ADVISED TO PERFORM PHOTOGRAPHIC SURVEYS AND OTHER DOCUMENTATION OF THE ADJACENT BUILDINGS BEFORE THE START AND DURING CONSTRUCTION

D. RETAINING WALLS

1. DESIGN CRITERIA
   a. ACTIVE SOIL PRESSURE: 40 PSF PER FOOT OF DEPTH.
   b. SURCHARGE: WALLS HAVE BEEN DESIGNED FOR A SURCHARGE LOAD OF 100 PSF EQUIVALENT TO AN ADDITIONAL LATERAL PRESSURE OF 33 PSF.
   c. THE DESIGN PRESSURES SPECIFIED ABOVE ARE BASED ON DRAINED BACKFILL WITH NO BUILDUP OF WATER PRESSURE BEHIND THE WALLS.

E. CONSTRUCTION DEWATERING

1. THE CONTRACTOR SHALL DETERMINE THE EXTENT OF CONSTRUCTION DEWATERING REQUIRED FOR THE EXCAVATION. THE CONTRACTOR SHALL SUBMIT TO THE CONTRACTING OFFICER FOR REVIEW THE PROPOSED PLAN FOR CONSTRUCTION DEWATERING, PRIOR TO BEGINNING THE EXCAVATION.

PART III - CONCRETE

A. POUR STRIPS WILL TEMPORARILY SEPARATE THE FLOOR PLATE IN TWO SEGMENTS DURING CONSTRUCTION (REFERENCE DETAIL 4/S424). POUR STRIPS ARE EXPECTED TO REMAIN OPEN TO ALLOW SUFFICIENT CONCRETE SHRINKAGE TO OCCUR BEFORE THE STRIPS ARE CLOSED. THESE SHOULD REMAIN OPEN AS FOLLOWS:
   1. 10 WEEKS: LEVEL 2
   2. 8 WEEKS: LEVEL 3
   3. 6 WEEKS: LEVEL 4
   4. 4 WEEKS: LEVEL 5 AND ABOVE

B. REFER TO S401 FOR THE CLASSES OF CONCRETE MATRIX.

SYMBOLS AND NOTATIONS

UNIVERSAL SYMBOLS

THESE FOLLOWING SYMBOLS MAY BE USED THROUGHOUT THE DRAWINGS:

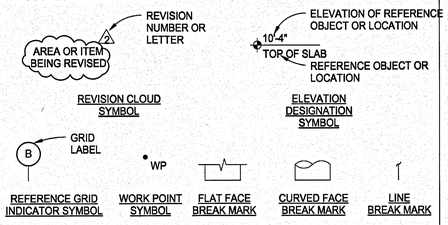

REVISION CLOUD SYMBOL | ELEVATION DESIGNATION SYMBOL | REFERENCE GRID INDICATOR SYMBOL | WORK POINT SYMBOL | FLAT FACE BREAK MARK | CURVED FACE BREAK MARK | LINE BREAK MARK

PLAN SYMBOLS

THE FOLLOWING SYMBOLS MAY BE USED THROUGHOUT THE PLANS.

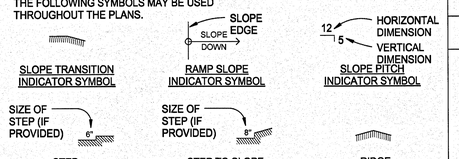

SLOPE TRANSITION INDICATOR SYMBOL | RAMP SLOPE INDICATOR SYMBOL | SLOPE PITCH INDICATOR SYMBOL | STEP INDICATOR SYMBOL | STEP TO SLOPE INDICATOR SYMBOL | RIDGE INDICATOR SYMBOL | ONE-WAY SLAB OR DECK SPAN INDICATOR SYMBOL | TWO-WAY SLAB SPAN INDICATOR SYMBOL | KEYNOTE INDICATOR SYMBOL

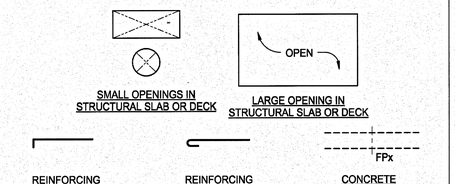

SMALL OPENINGS IN STRUCTURAL SLAB OR DECK | LARGE OPENING IN STRUCTURAL SLAB OR DECK | REINFORCING STEEL WITH 90° HOOK | REINFORCING STEEL WITH 180° HOOK | CONCRETE FRAMING PENETRATION

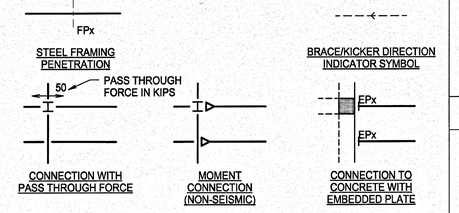

STEEL FRAMING PENETRATION | BRACE/KICKER DIRECTION INDICATOR SYMBOL | CONNECTION WITH PASS THROUGH FORCE | MOMENT CONNECTION (NON-SEISMIC) | CONNECTION TO CONCRETE WITH EMBEDDED PLATE

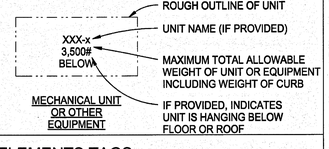

MECHANICAL UNIT OR OTHER EQUIPMENT

STRUCTURAL ELEMENTS TAGS

THE FOLLOWING STRUCTURAL ELEMENT TAGS, USED IN CONJUNCTION WITH SCHEDULES, MAY APPEAR ON THE DRAWINGS:

Bxx	DENOTES CONCRETE BEAM TYPE "xx"
BPxx	DENOTES BASE PLATE TYPE "xx"
Cxx	DENOTES COLUMN TYPE "xx"
EPxx	DENOTES EMBEDDED PLATE TYPE "xx"
Fxx	DENOTES SPREAD FOOTING TYPE "xx"
MWxx	DENOTES CMU WALL TYPE "xx"
Pxx	DENOTES PIER TYPE "xx"
PCxx	DENOTES PILE OR PIER CAP TYPE "xx"
Sxx	DENOTES ONE-WAY SLAB TYPE "xx"
SRxx	DENOTES HEADED SHEAR STUD REINFORCEMENT TYPE "xx"
SFxx	DENOTES STRIP FOOTING TYPE "xx"
Txx	DENOTES SLAB TOP REINFORCEMENT TYPE "xx"
WFxx	DENOTES WALL FOOTING TYPE "xx"

FOUNDATION ANNOTATION STYLES

THE FOLLOWING STRUCTURAL ANNOTATIONS MAY APPEAR ON THE FOUNDATION PLANS:

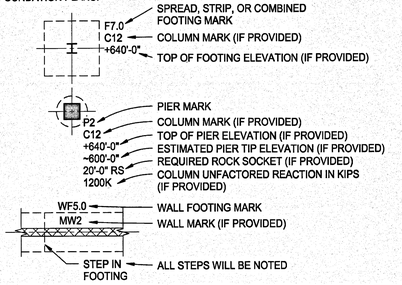

CONCRETE ANNOTATION STYLES

THE FOLLOWING STRUCTURAL ANNOTATIONS MAY APPEAR ON THE CONCRETE FRAMING PLANS

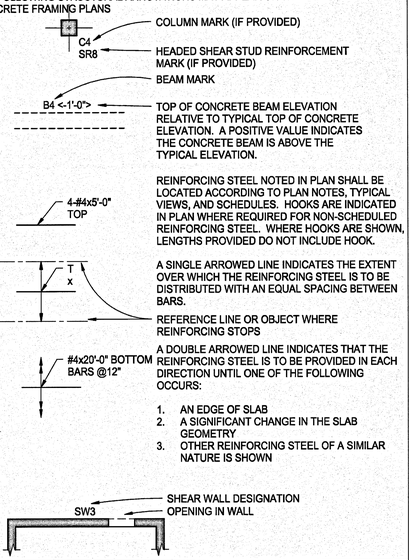

STEEL ANNOTATION STYLES

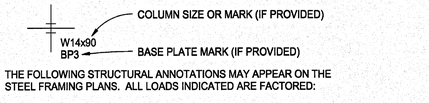

THE FOLLOWING STRUCTURAL ANNOTATIONS MAY APPEAR ON THE STEEL FRAMING PLANS. ALL LOADS INDICATED ARE FACTORED:

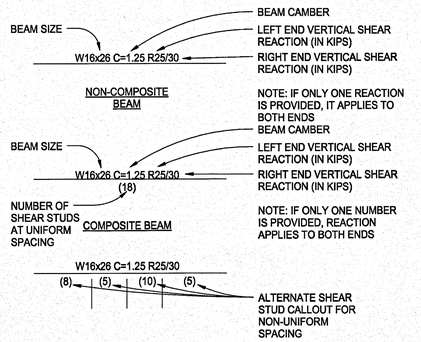

ADDITIONAL INFORMATION MAY BE SPECIFIED ON STEEL BEAMS FOR THE PURPOSES OF DELEGATED CONNECTION DESIGN. IN THOSE CASES, FORCES AND MOMENTS WILL BE PROVIDED AS APPROPRIATE AT THE ENDS OF THE BEAMS AS INDICATED BELOW.

STEEL ANNOTATION STYLES

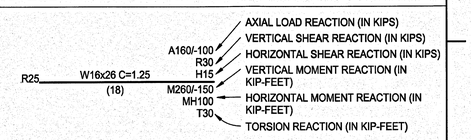

THE FOLLOWING DIAGRAM PROVIDES INFORMATION REGARDING THE ORIENTATION OF THE REACTIONS PROVIDED. THE DIAGRAM BELOW APPLIES TO ALL NON-SLOPING MEMBERS REGARDLESS OF THE INDIVIDUAL MEMBER ORIENTATION (FOR EXAMPLE, AN HSS ORIENTED LONG-SIDE HORIZONTAL). REFER TO DETAILS FOR ADDITIONAL INFORMATION ON LOADING OF SLOPED MEMBERS.

FOR ALL LOADING, REACTIONS ARE TO BE APPLIED AT THE CENTERLINE OF THE MEMBER AT THE WORK POINT, UNLESS NOTED OTHERWISE. IF ONLY A SINGLE VALUE IS SHOWN, THE LOAD SHALL BE ASSUMED TO ACT IN BOTH DIRECTIONS WITH EQUAL MAGNITUDE. FOR AXIAL LOAD REACTIONS, A POSITIVE VALUE INDICATES TENSION. FOR VERTICAL MOMENTS, A POSITIVE VALUE WILL CAUSE COMPRESSION IN THE TOP OF THE BEAM AND TENSION IN THE BOTTOM.

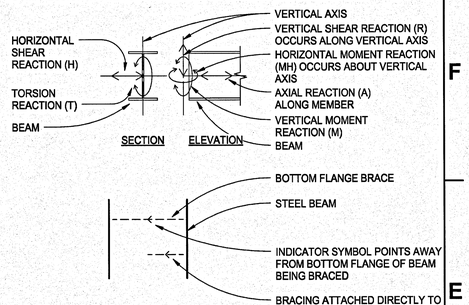

SYM	ZONE		DATE	APPROVED

REVISIONS

WALTER P MOORE
WALTER P. MOORE AND ASSOCIATES, INC.
300 SOUTH ORANGE AVENUE, SUITE 1100
ORLANDO, FLORIDA 32801,8332
PHONE: 407.418.2218 FAX: 407.418.2257
CERTIFICATE OF AUTHORIZATION NO. 3818
007-11022-00
JAIME E. VASQUEZ P.E. NO. 49103
TO THE BEST OF THE ENGINEER'S KNOWLEDGE, THE PLANS AND SPECIFICATIONS COMPLY WITH THE APPLICABLE MINIMUM BUILDING CODES

SIGNATURES	DATE
DRAWN	
ANDREW MYERS	12.18.13
CHECKED	
JAIME E. VASQUEZ	12.18.13
SUBMITTED: ARCHENG OF RECORD	
JAIME E. VASQUEZ	12/18/13
ST of LICENSURE: FL	
LICENSE NO: 49103	
APPROVED	
JOSEPH M. ALLEN	12.18.13
BRUCE KINNAIRD	12/18/2013

NATIONAL AERONAUTICS AND SPACE ADMINISTRATION
JOHN F. KENNEDY SPACE CENTER, NASA
KENNEDY SPACE CENTER, FLORIDA

KSC CENTRAL CAMPUS
REPLACEMENT HEADQUARTERS BUILDING
PHASE 1
VOL. 1 OF 4

GENERAL NOTES

FILE NO.	SIZE	DWG. NO.
C-12070.00	F	79K39622 VOL 1
PCN. NO. 98745.1a		SHEET 92

S001

KSC FORM 1-11 (3/76)(C/G 3/94)

NOTICE: When Government drawings, specifications, or other data are used for any purpose other than in connection with a definitely related Government procurement operation, the United States Government thereby incurs no responsibility nor obligation whatsoever; and the fact that the Government may have formulated, furnished, or in any way supplied the said drawings, specifications or other data is not to be regarded by implication or otherwise as in any manner licensing the holder or any other person or corporation, or conveying any rights or permission to manufacture, use, or sell any patented invention that may in any way be related thereto.

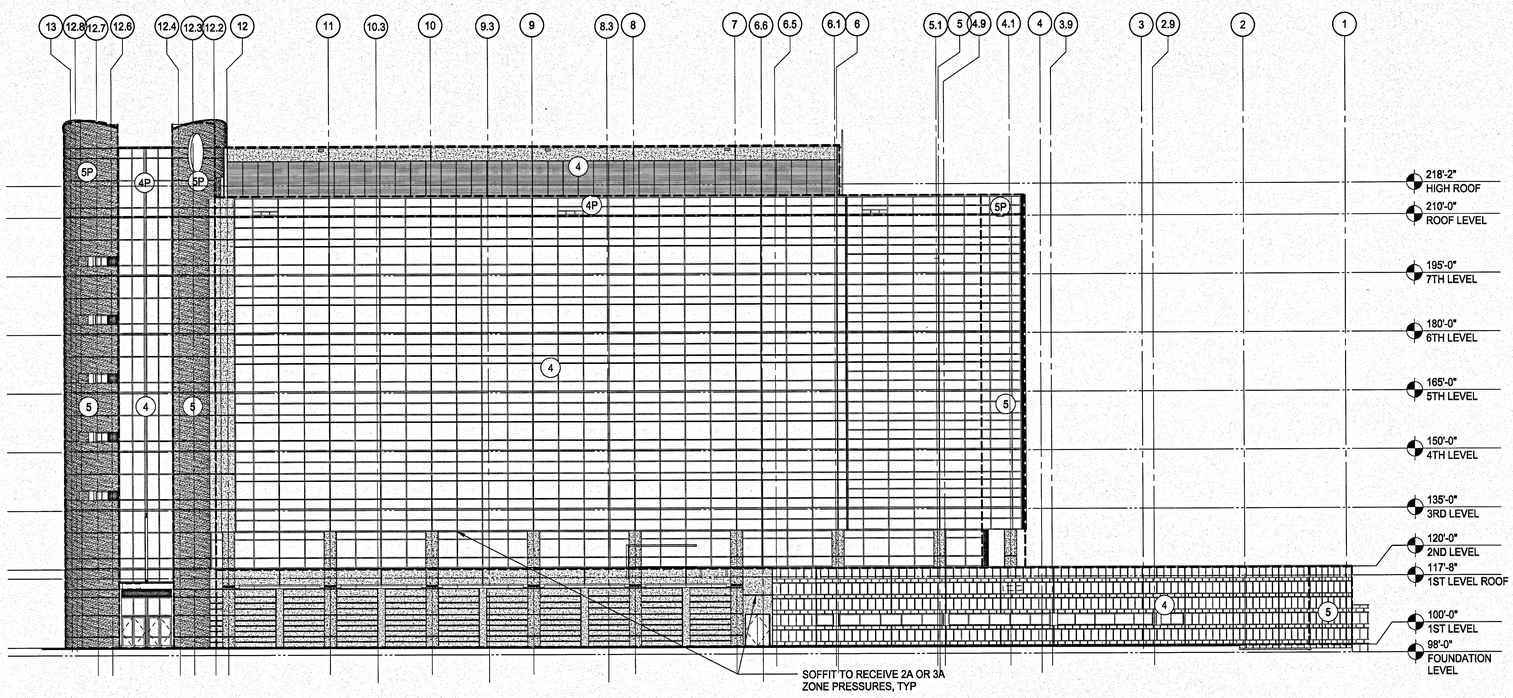

NORTH ELEVATION (1)
1/16" = 1'-0"

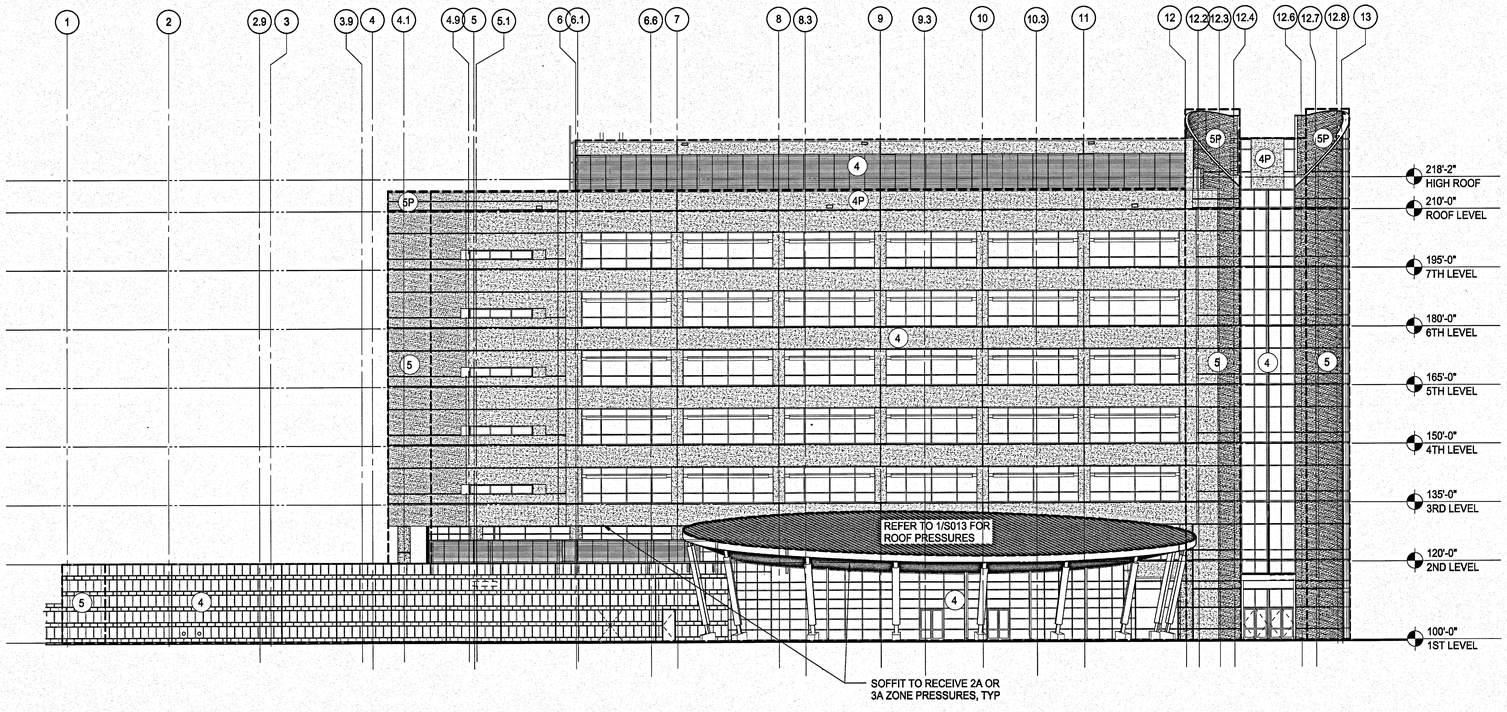

SOUTH ELEVATION (2)
1/16" = 1'-0"

CLADDING TYPE	LOCATION	EFFECTIVE AREA (sf)	COEFFICIENTS +GCP	COEFFICIENTS -GCP	WIND PRESSURES +p(psf)	WIND PRESSURES -p (psf)
Wall (4)	Interior	10	0.90	-0.90	71.3	-71.3
		20	0.90	-0.90	71.3	-71.3
		50	0.81	-0.84	65.6	-67.5
		100	0.75	-0.80	61.4	-64.7
		500	0.60	-0.70	51.5	-58.1
Wall (5)	Edge	10	0.90	-1.80	71.3	-130.7
		20	0.90	-1.80	71.3	-130.7
		50	0.81	-1.57	65.6	-115.7
		100	0.75	-1.40	61.4	-104.3
		500	0.60	-1.00	51.5	-77.9
Roof (1)	Interior	10	0.00	-1.40	16.0	-104.3
		20	0.00	-1.31	16.0	-98.4
		50	0.00	-1.19	16.0	-90.7
		100	0.00	-1.11	16.0	-84.9
		500	0.00	-0.90	16.0	-71.3
Roof (2)	Edge	10	0.00	-2.30	16.0	-163.7
		20	0.00	-2.18	16.0	-155.5
		50	0.00	-2.01	16.0	-144.7
		100	0.00	-1.89	16.0	-136.5
		500	0.00	-1.60	16.0	-117.5
Roof (3)	Corner	10	0.00	-2.30	16.0	-163.7
		20	0.00	-2.18	16.0	-155.5
		50	0.00	-2.01	16.0	-144.7
		100	0.00	-1.89	16.0	-136.5
		500	0.00	-1.60	16.0	-117.5
Overhang (2A)	Interior & Edge	10	0.00	-1.70	16.0	-112.2
		20	0.00	-1.67	16.0	-110.2
		50	0.00	-1.63	16.0	-107.6
		100	0.00	-1.60	16.0	-105.6
		500	0.00	-1.10	16.0	-72.6
Overhang (3A)	Corner	10	0.00	-1.70	16.0	-112.2
		20	0.00	-1.67	16.0	-110.2
		50	0.00	-1.63	16.0	-107.6
		100	0.00	-1.60	16.0	-105.6
		500	0.00	-1.10	16.0	-72.6
Parapet (4P)	Interior	10	3.20	-1.80	211.2	-118.8
		20	3.08	-1.80	203.0	-118.8
		50	2.83	-1.66	186.6	-109.4
		100	2.64	-1.55	174.1	-102.3
		500	2.20	-1.30	145.2	-85.8
Parapet (5P)	Edge	10	3.20	-2.70	211.2	-178.2
		20	3.08	-2.70	203.0	-178.2
		50	2.83	-2.39	186.6	-157.5
		100	2.64	-2.15	174.1	-141.9
		500	2.20	-1.60	145.2	-105.6
WIDTH OF EDGE/CORNER PRESSURE ZONE A: 11.0 FT (UNO)						

NOTE:
1. BUILDING ELEVATIONS AND ROOF PLANS SHOWN INDICATE SCHEMATIC INTENT OF WIND PRESSURE DISTRIBUTIONS. REFER TO ARCHITECTURAL DRAWINGS FOR DETAILED BUILDING ELEVATIONS.

GRAPHIC SCALE
0 8 16 24
SCALE IN FEET
1/8" = 1'-0"

SYM	ZONE		DATE	APPROVED
		REVISIONS		

WALTER P MOORE
WALTER P. MOORE AND ASSOCIATES, INC.
300 SOUTH ORANGE AVENUE, SUITE 1100
ORLANDO, FLORIDA 32801.8332
PHONE: 407.418.2218 FAX: 407.418.2257
CERTIFICATE OF AUTHORIZATION NO. 3818
(EOR 11/2013-00)
JAIME E. VASQUEZ P.E. NO. 49103
TO THE BEST OF THE ENGINEERS KNOWLEDGE, THE PLANS AND SPECIFICATIONS COMPLY WITH THE APPLICABLE MINIMUM BUILDING CODES

SIGNATURES	DATE
DRAWN ANDREW MYERS	12.18.13
CHECKED JAIME E. VASQUEZ	12.18.13
SUBMITTED: ARCHITECT OF RECORD JAIME E. VASQUEZ	12.18.13
ST of LICENSURE: FL LICENSE NO: 49103	
APPROVED JOSEPH M. MEES	12.18.13
BRUCE KINNAIRD	12/18/13

NATIONAL AERONAUTICS AND SPACE ADMINISTRATION
JOHN F. KENNEDY SPACE CENTER, NASA
KENNEDY SPACE CENTER, FLORIDA

KSC CENTRAL CAMPUS
REPLACEMENT HEADQUARTERS BUILDING
PHASE 1
VOL. 1 OF 4

COMPONENTS AND CLADDING PRESSURE DIAGRAMS

FILE NO.	SIZE	DWG. NO.
C-12070.00	F	79K39622 VOL 1

PCN. NO. 98745.1a

S010

SHEET 93

KSC FORM 1-11 (3/76)(C/G 3/94)

NOTICE: When Government drawings, specifications, or other data are used for any purpose other than in connection with a definitely related Government procurement operation, the United States Government thereby incurs no responsibility nor obligation whatsoever; and the fact that the Government may have formulated, furnished, or in any way supplied the said drawings, specifications or other data is not to be regarded by implication or otherwise as in any manner licensing the holder or any other person or corporation, or conveying any rights or permission to manufacture, use, or sell any patented invention that may in any way be related thereto.

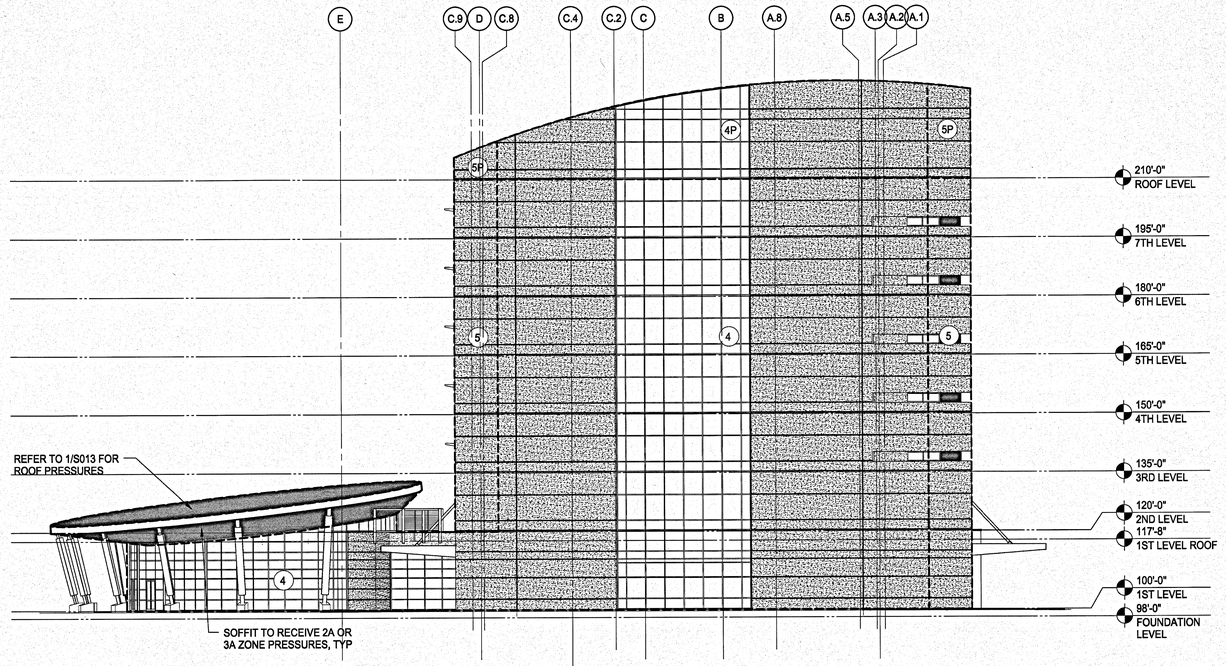

EAST ELEVATION 1
1/16" = 1'-0"

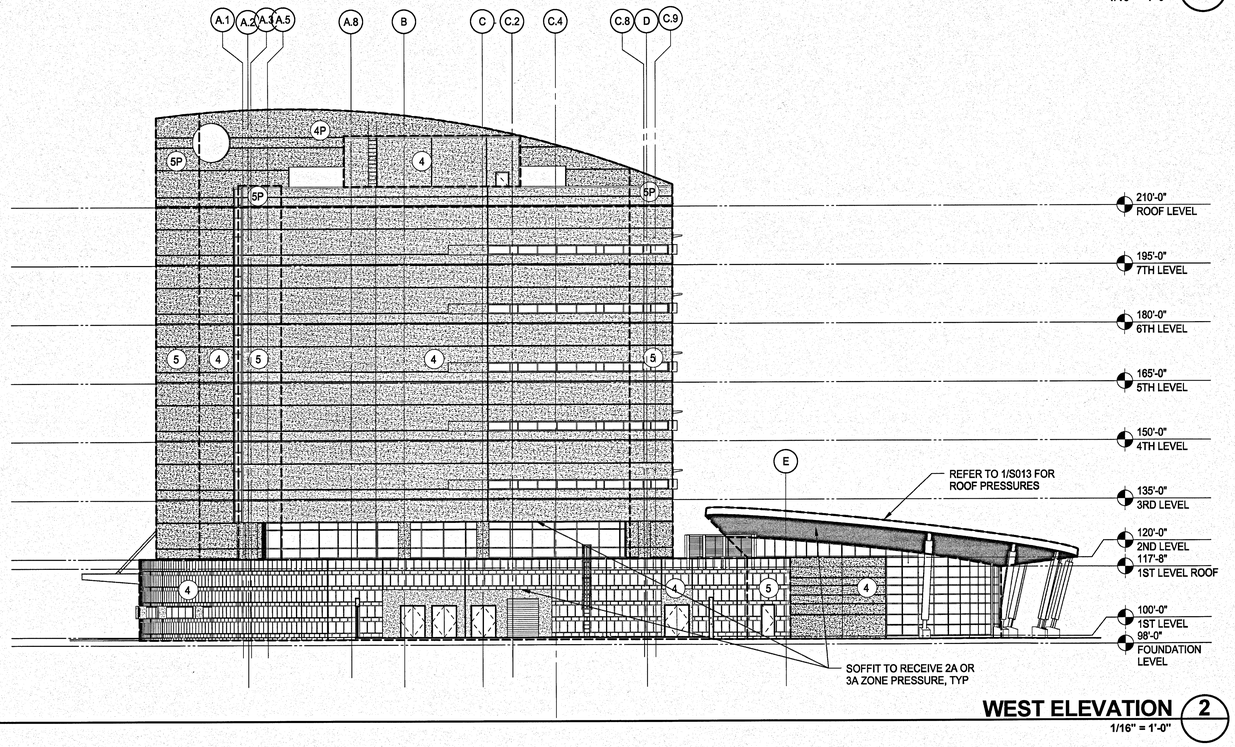

WEST ELEVATION 2
1/16" = 1'-0"

CLADDING TYPE	LOCATION	EFFECTIVE AREA (sf)	COEFFICIENTS +GCP	COEFFICIENTS -GCP	WIND PRESSURES +p(psf)	WIND PRESSURES -p (psf)
Wall (4)	Interior	10	0.90	-0.90	71.3	-71.3
		20	0.90	-0.90	71.3	-71.3
		50	0.81	-0.84	65.6	-67.5
		100	0.75	-0.80	61.4	-64.7
		500	0.60	-0.70	51.5	-58.1
Wall (5)	Edge	10	0.90	-1.80	71.3	-130.7
		20	0.90	-1.80	71.3	-130.7
		50	0.81	-1.57	65.6	-115.7
		100	0.75	-1.40	61.4	-104.3
		500	0.60	-1.00	51.5	-77.9
Roof (1)	Interior	10	0.00	-1.40	16.0	-104.3
		20	0.00	-1.31	16.0	-98.4
		50	0.00	-1.19	16.0	-90.7
		100	0.00	-1.11	16.0	-84.9
		500	0.00	-0.90	16.0	-71.3
Roof (2)	Edge	10	0.00	-2.30	16.0	-163.7
		20	0.00	-2.18	16.0	-155.5
		50	0.00	-2.01	16.0	-144.7
		100	0.00	-1.89	16.0	-136.5
		500	0.00	-1.60	16.0	-117.5
Roof (3)	Corner	10	0.00	-2.30	16.0	-163.7
		20	0.00	-2.18	16.0	-155.5
		50	0.00	-2.01	16.0	-144.7
		100	0.00	-1.89	16.0	-136.5
		500	0.00	-1.60	16.0	-117.5
Overhang (2A)	Interior & Edge	10	0.00	-1.70	16.0	-112.2
		20	0.00	-1.67	16.0	-110.2
		50	0.00	-1.63	16.0	-107.6
		100	0.00	-1.60	16.0	-105.6
		500	0.00	-1.10	16.0	-72.6
Overhang (3A)	Corner	10	0.00	-1.70	16.0	-112.2
		20	0.00	-1.67	16.0	-110.2
		50	0.00	-1.63	16.0	-107.6
		100	0.00	-1.60	16.0	-105.6
		500	0.00	-1.10	16.0	-72.6
Parapet (4P)	Interior	10	3.20	-1.80	211.2	-118.8
		20	3.08	-1.80	203.0	-118.8
		50	2.83	-1.66	186.6	-109.4
		100	2.64	-1.55	174.1	-102.3
		500	2.20	-1.30	145.2	-85.8
Parapet (5P)	Edge	10	3.20	-2.70	211.2	-178.2
		20	3.08	-2.70	203.0	-178.2
		50	2.83	-2.39	186.6	-157.5
		100	2.64	-2.15	174.1	-141.9
		500	2.20	-1.60	145.2	-105.6
WIDTH OF EDGE/CORNER PRESSURE ZONE A: 11.0 FT (UNO)						

NOTE:
1. BUILDING ELEVATIONS AND ROOF PLANS SHOWN INDICATE SCHEMATIC INTENT OF WIND PRESSURE DISTRIBUTIONS. REFER TO ARCHITECTURAL DRAWINGS FOR DETAILED BUILDING ELEVATIONS.

GRAPHIC SCALE
0 16 32 48
SCALE IN FEET
1/16" = 1'-0"

S011

SIGNATURES	DATE
DRAWN	
ANDREW MYERS	12.18.13
CHECKED	
JAIME E. VASQUEZ	12.18.13
SUBMITTING ARCHIVING OF RECORD	
JAIME E. VASQUEZ	12.18.13
ST of LICENSURE: FL	
LICENSE NO: 49103	
APPROVED	
JOSEPH M. ALES	12.18.13
BRUCE KINNAIRD	12/18/13

SYM	ZONE		DATE	APPROVED
		REVISIONS		

WALTER P MOORE
WALTER P. MOORE AND ASSOCIATES, INC.
800 SOUTH ORANGE AVENUE, SUITE 100
ORLANDO, FLORIDA 32801.3382
PHONE: 407.418.2218 FAX: 407.418.2267
CERTIFICATE OF AUTHORIZATION NO. 3818
S07-11025-00
JAIME E. VASQUEZ P.E. NO. 49103
TO THE BEST OF THE ENGINEER'S KNOWLEDGE, THE PLANS AND SPECIFICATIONS COMPLY WITH THE APPLICABLE MINIMUM BUILDING CODES

NATIONAL AERONAUTICS AND SPACE ADMINISTRATION
JOHN F. KENNEDY SPACE CENTER, NASA
KENNEDY SPACE CENTER, FLORIDA

KSC CENTRAL CAMPUS
REPLACEMENT HEADQUARTERS BUILDING
PHASE 1
VOL. 1 OF 4
COMPONENTS AND CLADDING PRESSURE DIAGRAMS

FILE NO.	SIZE	DWG. NO.
C-12070.00	F	79K39622 VOL 1
PCN. NO. 98745.1a		SHEET 94

NOTICE: When Government drawings, specifications, or other data are used for any purpose other than in connection with a definitely related Government procurement operation, the United States Government thereby incurs no responsibility nor obligation whatsoever; and the fact that the Government may have formulated, furnished, or in any way supplied the said drawings, specifications or other data is not to be regarded by implication or otherwise as in any manner licensing the holder or any other person or corporation, or conveying any rights or permission to manufacture, use, or sell any patented invention that may in any way be related thereto.

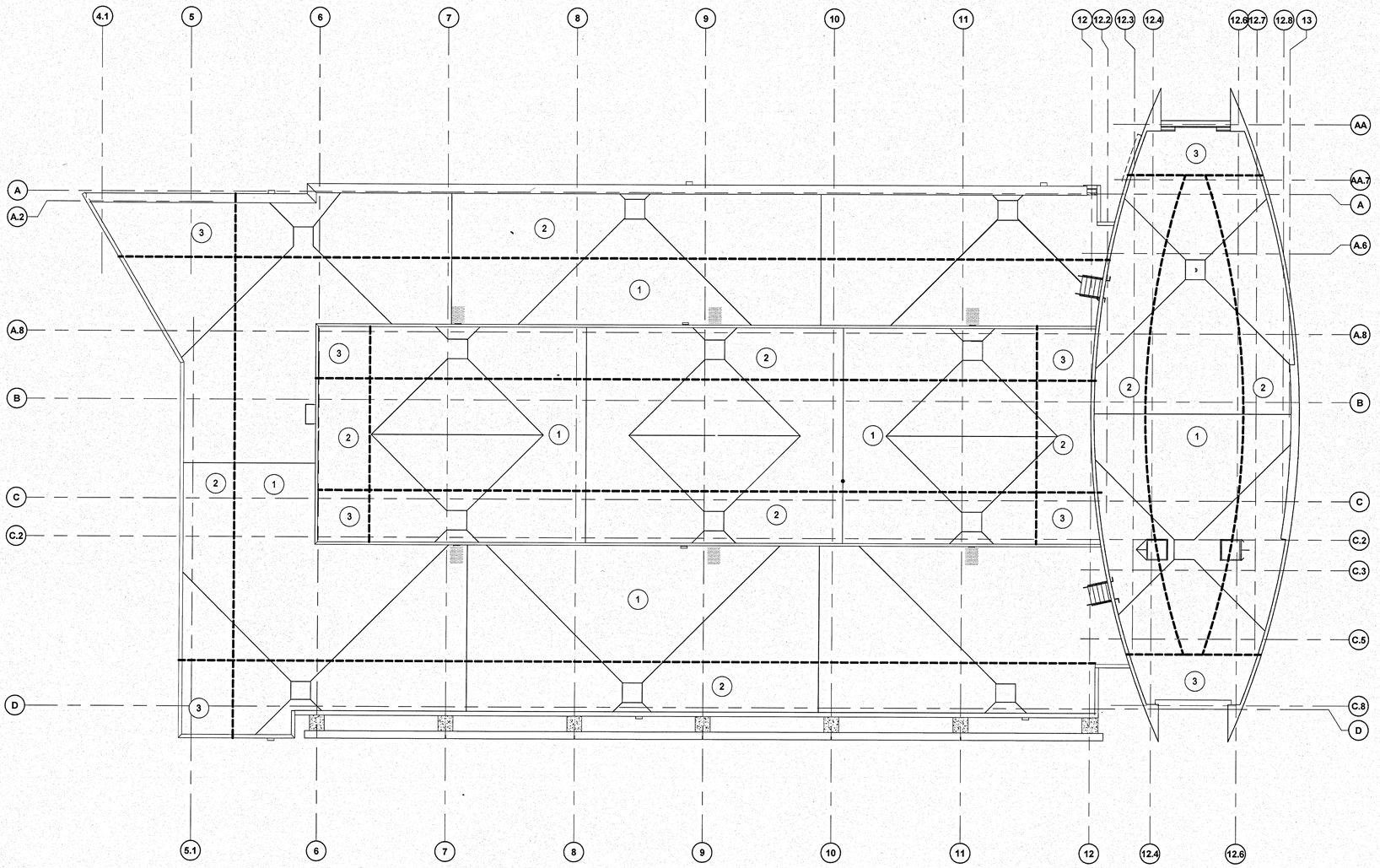

TOWER ROOF PLAN (1)

3/32" = 1'-0"

CLADDING TYPE	LOCATION	EFFECTIVE AREA (sf)	COEFFICIENTS +GCP	COEFFICIENTS -GCP	WIND PRESSURES +p(psf)	WIND PRESSURES -p (psf)
Wall (4)	Interior	10	0.90	-0.90	71.3	-71.3
		20	0.90	-0.90	71.3	-71.3
		50	0.81	-0.84	65.6	-67.5
		100	0.75	-0.80	61.4	-64.7
		500	0.60	-0.70	51.5	-58.1
Wall (5)	Edge	10	0.90	-1.80	71.3	-130.7
		20	0.90	-1.80	71.3	-130.7
		50	0.81	-1.57	65.6	-115.7
		100	0.75	-1.40	61.4	-104.3
		500	0.60	-1.00	51.5	-77.9
Roof (1)	Interior	10	0.00	-1.40	16.0	-104.3
		20	0.00	-1.31	16.0	-98.4
		50	0.00	-1.19	16.0	-90.7
		100	0.00	-1.11	16.0	-84.9
		500	0.00	-0.90	16.0	-71.3
Roof (2)	Edge	10	0.00	-2.30	16.0	-163.7
		20	0.00	-2.18	16.0	-155.5
		50	0.00	-2.01	16.0	-144.7
		100	0.00	-1.89	16.0	-136.5
		500	0.00	-1.60	16.0	-117.5
Roof (3)	Corner	10	0.00	-2.30	16.0	-163.7
		20	0.00	-2.18	16.0	-155.5
		50	0.00	-2.01	16.0	-144.7
		100	0.00	-1.89	16.0	-136.5
		500	0.00	-1.60	16.0	-117.5
Overhang (2A)	Interior & Edge	10	0.00	-1.70	16.0	-112.2
		20	0.00	-1.67	16.0	-110.2
		50	0.00	-1.63	16.0	-107.6
		100	0.00	-1.60	16.0	-105.6
		500	0.00	-1.10	16.0	-72.6
Overhang (3A)	Corner	10	0.00	-1.70	16.0	-112.2
		20	0.00	-1.67	16.0	-110.2
		50	0.00	-1.63	16.0	-107.6
		100	0.00	-1.60	16.0	-105.6
		500	0.00	-1.10	16.0	-72.6
Parapet (4P)	Interior	10	3.20	-1.80	211.2	-118.8
		20	3.08	-1.80	203.0	-118.8
		50	2.83	-1.66	186.6	-109.4
		100	2.64	-1.55	174.1	-102.3
		500	2.20	-1.30	145.2	-85.8
Parapet (5P)	Edge	10	3.20	-2.70	211.2	-178.2
		20	3.08	-2.70	203.0	-178.2
		50	2.83	-2.39	186.6	-157.5
		100	2.64	-2.15	174.1	-141.9
		500	2.20	-1.60	145.2	-105.6

WIDTH OF EDGE/CORNER PRESSURE ZONE A: 11.0 FT (UNO)

NOTE:
1. BUILDING ELEVATIONS AND ROOF PLANS SHOWN INDICATE SCHEMATIC INTENT OF WIND PRESSURE DISTRIBUTIONS. REFER TO ARCHITECTURAL DRAWINGS FOR DETAILED BUILDING ELEVATIONS.

GRAPHIC SCALE
0 11 21 32
SCALE IN FEET
3/32" = 1'-0"

S012

SIGNATURES	DATE
DRAWN ANDREW MYERS	12.18.13
CHECKED JAIME E. VASQUEZ	12.18.13
SUBMITTED (ARCHENG OF RECORD) JAIME E. VASQUEZ	12.18.13
ST of LICENSURE: FL LICENSE NO: 49103	
APPROVED JOSEPH M. ALES	12.18.13
BRUCE KINNAIRD	12/18/13

SYM	ZONE		DATE	APPROVED

REVISIONS

WALTER P MOORE
WALTER P. MOORE AND ASSOCIATES, INC.
300 SOUTH ORANGE AVENUE, SUITE 1180
ORLANDO, FLORIDA 32801.3392
PHONE: 407.418.2218 FAX: 407.418.2267
CERTIFICATE OF AUTHORIZATION NO. 3818
007-11003.000
JAIME E. VASQUEZ P.E. NO. 49103
TO THE BEST OF THE ENGINEER'S KNOWLEDGE, THE PLANS AND SPECIFICATIONS COMPLY WITH THE APPLICABLE MINIMUM BUILDING CODES

NATIONAL AERONAUTICS AND SPACE ADMINISTRATION
JOHN F. KENNEDY SPACE CENTER, NASA
KENNEDY SPACE CENTER, FLORIDA

KSC CENTRAL CAMPUS
REPLACEMENT HEADQUARTERS BUILDING
PHASE 1
VOL. 1 OF 4

COMPONENTS AND CLADDING PRESSURE DIAGRAMS

FILE NO.	SIZE	DWG. NO.
C-12070.00	F	79K39622 VOL 1
PCN. NO. 98745.1a		SHEET 95

NOTICE: When Government drawings, specifications, or other data are used for any purpose other than in connection with a definitely related Government procurement operation, the United States Government thereby incurs no responsibility nor obligation whatsoever; and the fact that the Government may have formulated, furnished, or in any way supplied the said drawings, specifications or other data is not to be regarded by implication or otherwise as in any manner licensing the holder or any other person or corporation, or conveying any rights or permission to manufacture, use, or sell any patented invention that may in any way be related thereto.

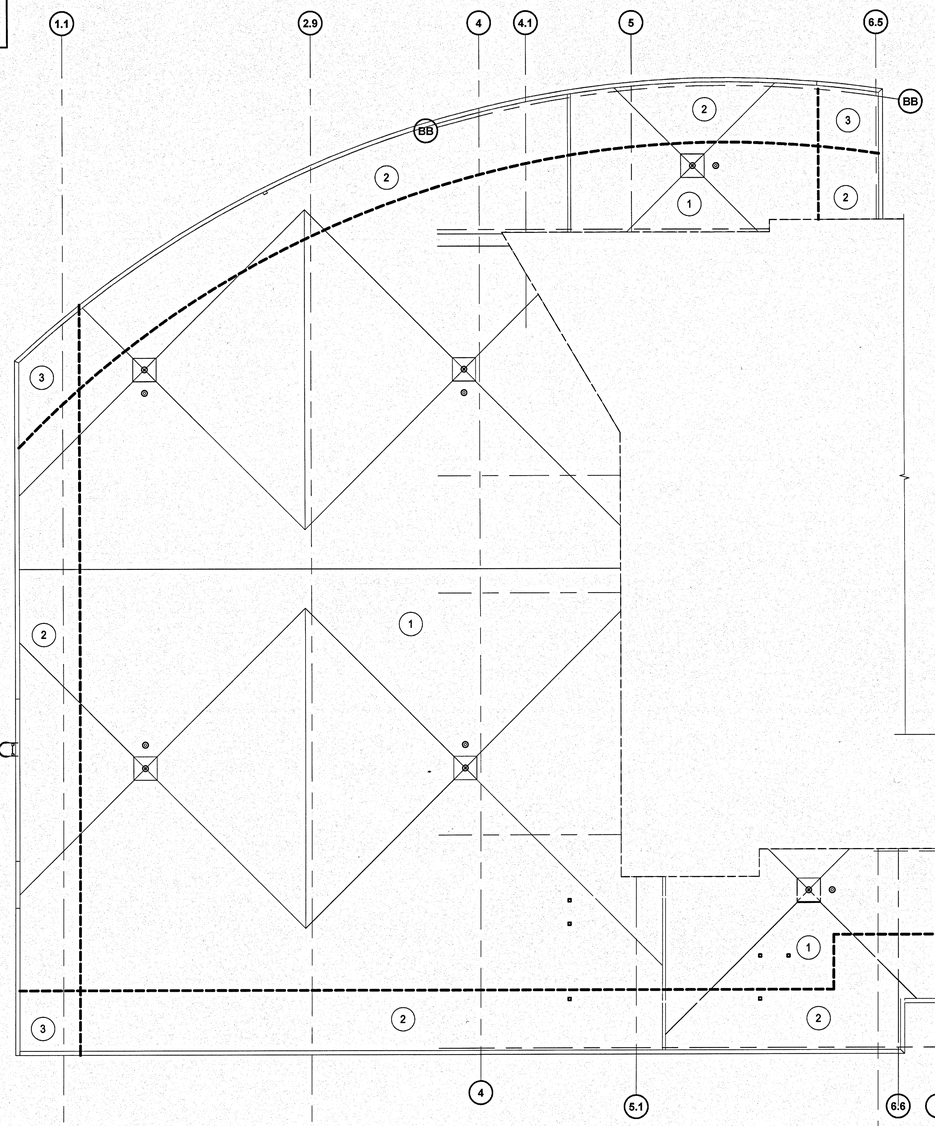

REFER TO SHEET S012
FOR ROOF PLAN OF
PHASE 1 TOWER

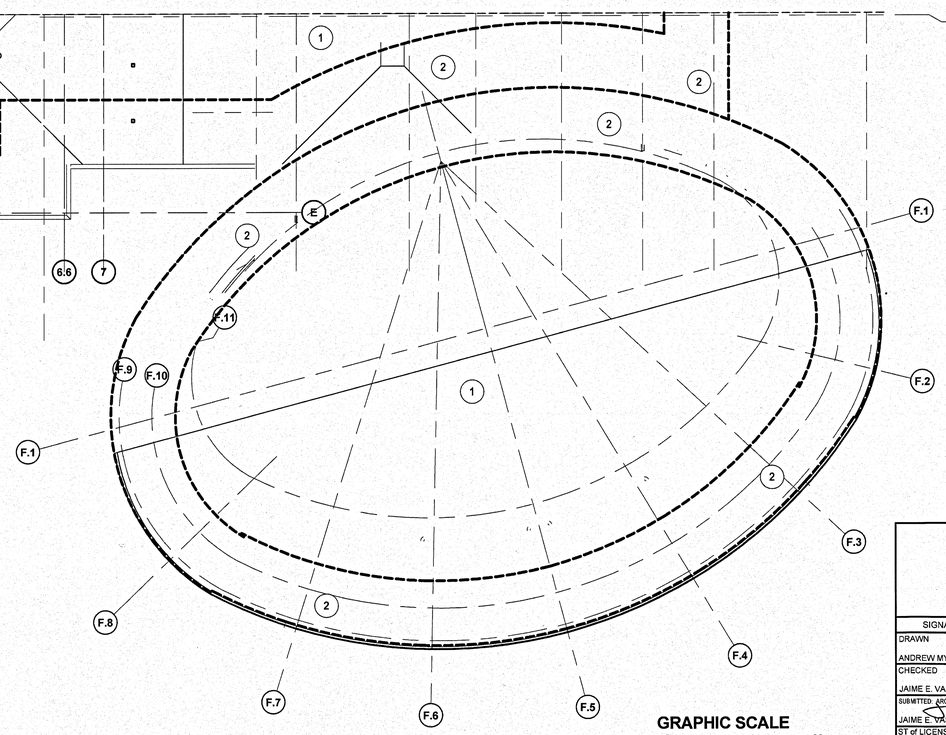

CLADDING TYPE	LOCATION	EFFECTIVE AREA (sf)	COEFFICIENTS +GCP	COEFFICIENTS -GCP	WIND PRESSURES +p(psf)	WIND PRESSURES -p (psf)
Wall (4)	Interior	10	0.90	-0.90	71.3	-71.3
		20	0.90	-0.90	71.3	-71.3
		50	0.81	-0.84	65.6	-67.5
		100	0.75	-0.80	61.4	-64.7
		500	0.60	-0.70	51.5	-58.1
Wall (5)	Edge	10	0.90	-1.80	71.3	-130.7
		20	0.90	-1.80	71.3	-130.7
		50	0.81	-1.57	65.6	-115.7
		100	0.75	-1.40	61.4	-104.3
		500	0.60	-1.00	51.5	-77.9
Roof (1)	Interior	10	0.00	-1.40	16.0	-104.3
		20	0.00	-1.31	16.0	-98.4
		50	0.00	-1.19	16.0	-90.7
		100	0.00	-1.11	16.0	-84.9
		500	0.00	-0.90	16.0	-71.3
Roof (2)	Edge	10	0.00	-2.30	16.0	-163.7
		20	0.00	-2.18	16.0	-155.5
		50	0.00	-2.01	16.0	-144.7
		100	0.00	-1.89	16.0	-136.5
		500	0.00	-1.60	16.0	-117.5
Roof (3)	Corner	10	0.00	-2.30	16.0	-163.7
		20	0.00	-2.18	16.0	-155.5
		50	0.00	-2.01	16.0	-144.7
		100	0.00	-1.89	16.0	-136.5
		500	0.00	-1.60	16.0	-117.5
Overhang (2A)	Interior & Edge	10	0.00	-1.70	16.0	-112.2
		20	0.00	-1.67	16.0	-110.2
		50	0.00	-1.63	16.0	-107.6
		100	0.00	-1.60	16.0	-105.6
		500	0.00	-1.10	16.0	-72.6
Overhang (3A)	Corner	10	0.00	-1.70	16.0	-112.2
		20	0.00	-1.67	16.0	-110.2
		50	0.00	-1.63	16.0	-107.6
		100	0.00	-1.60	16.0	-105.6
		500	0.00	-1.10	16.0	-72.6
Parapet (4P)	Interior	10	3.20	-1.80	211.2	-118.8
		20	3.08	-1.80	203.0	-118.8
		50	2.83	-1.66	186.6	-109.4
		100	2.64	-1.55	174.1	-102.3
		500	2.20	-1.30	145.2	-85.8
Parapet (5P)	Edge	10	3.20	-2.70	211.2	-178.2
		20	3.08	-2.70	203.0	-178.2
		50	2.83	-2.39	186.6	-157.5
		100	2.64	-2.15	174.1	-141.9
		500	2.20	-1.60	145.2	-105.6

WIDTH OF EDGE/CORNER PRESSURE ZONE A: 11.0 FT (UNO)

NOTE:
1. BUILDING ELEVATIONS AND ROOF PLANS SHOWN INDICATE SCHEMATIC INTENT OF WIND PRESSURE DISTRIBUTIONS. REFER TO ARCHITECTURAL DRAWINGS FOR DETAILED BUILDING ELEVATIONS.

1ST LEVEL ROOF PLAN (1)
3/32" = 1'-0"

GRAPHIC SCALE
0 11 21 32
SCALE IN FEET
3/32" = 1'-0"

S013

SYM	ZONE		DATE	APPROVED

REVISIONS

WALTER P MOORE
WALTER P. MOORE AND ASSOCIATES, INC.
300 SOUTH ORANGE AVENUE, SUITE 1100
ORLANDO, FLORIDA 32801-3332
PHONE: 407.418.2218 FAX: 407.418.2257
CERTIFICATE OF AUTHORIZATION NO. 3818
(007-11539-0)
JAIME E. VASQUEZ P.E. NO. 49103
TO THE BEST OF THE ENGINEER'S KNOWLEDGE, THE PLANS AND SPECIFICATIONS COMPLY WITH THE APPLICABLE MINIMUM BUILDING CODES

SIGNATURES	DATE
DRAWN ANDREW MYERS	12.18.13
CHECKED JAIME E. VASQUEZ	12.18.13
SUBMITTED ARCHITECT OF RECORD JAIME E. VASQUEZ	12-18-13
ST of LICENSURE: FL LICENSE NO: 49103	
APPROVED JOSEPH M. ALES	12.18.13
BRUCE KINNAIRD	12/18/13

NATIONAL AERONAUTICS AND SPACE ADMINISTRATION
JOHN F. KENNEDY SPACE CENTER, NASA
KENNEDY SPACE CENTER, FLORIDA

KSC CENTRAL CAMPUS
REPLACEMENT HEADQUARTERS BUILDING
PHASE 1
VOL. 1 OF 4

COMPONENTS AND CLADDING PRESSURE DIAGRAMS

FILE NO.	SIZE	DWG. NO.
C-12070.00	F	79K39622 VOL 1

PCN. NO. 98745.1a SHEET 96

KSC FORM 1-11 (3/75)(C/G 3/94)

NOTICE: When Government drawings, specifications, or other data are used for any purpose other than in connection with a definitely related Government procurement operation, the United States Government thereby incurs no responsibility nor obligation whatsoever; and the fact that the Government may have formulated, furnished, or in any way supplied the said drawings, specifications or other data is not to be regarded by implication or otherwise as in any manner licensing the holder or any other person or corporation, or conveying any rights or permission to manufacture, use, or sell any patented invention that may in any way be related thereto.

NOTES:
1. DESIGN IS BASED ON MACHINEROOMLESS TYPE OF ELEVATORS.
2. REACTIONS MAY VARY DEPENDING ON THE SELECTED MANUFACTURER.
3. DIFFERENT MANUFACTURERS HAVE DIFFERENT SUPPORT REQUIREMENTS. CURRENT DESIGN ASSUMES THERE WILL NOT BE SHEAVE BEAMS AT THE TOP OF THE ELEVATORS. THEREFORE, NO PROVISIONS HAVE BEEN MADE FOR SUPPORT OF SUCH BEAMS.
4. CONTRACTOR SHALL COORDINATE ELEVATOR SUPPORT REQUIREMENTS AND INFORM THE GOVERNMENT, ARCHITECT, AND ENGINEER IF REQUIREMENTS DIFFER FROM WHAT IS INCLUDED IN THE CONSTRUCTION DOCUMENTS. CONTRACT SHALL ALSO INCLUDE IN THEIR BID STRUCTURAL MODIFICATIONS REQUIRED TO SUPPORT SUCH EQUIPMENT.

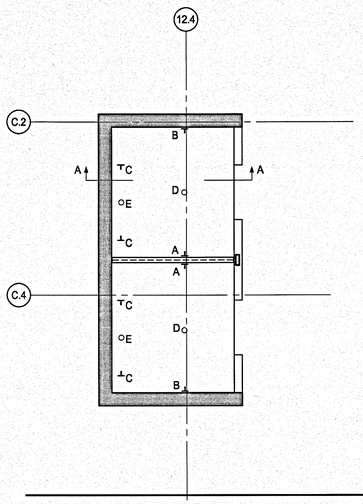

VERTICAL FORCES ONTO PIT FLOOR (lbf)					
RECATION LOCATION	A	B	C	D	E
Z DIRECTION	11376	9056	12281	36682	29355

**VERTICAL REACTIONS A, B AND OCCUR SIMULTANEOUSLY. VERTICAL REACTIONS D AND E OCCUR INDIVIDUALLY AND SEPERATELY FROM A, B AND C.

HOIST BEAM AND LIFE LINE VERTICAL FORCES (lbf)			
RECATION LOCATION	A	B	LIFE LINES
Z DIRECTION	9210	9060	5000

TOPMOST BRKT - TOTAL LOADING REACTIONS (lbf)			
RECATION LOCATION	A	B	C
X DIRECTION	255	255	50
Y DIRECTION	3707	3707	50

TOP LANDING BRKT - TOTAL LOADING REACTIONS (lbf)			
RECATION LOCATION	A	B	C
X DIRECTION	255	255	50
Y DIRECTION	4259	4259	50

BELOW TOP LANDING BRKT - TOTAL LOADING REACTIONS (lbf)			
RECATION LOCATION	A	B	C
X DIRECTION	255	255	50
Y DIRECTION	112	112	50

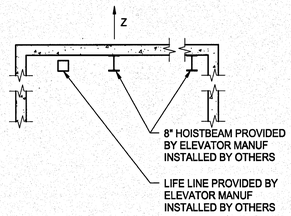

SECTION A-A

ELEVATOR 1 AND 2 REACTION (1)
NO SCALE

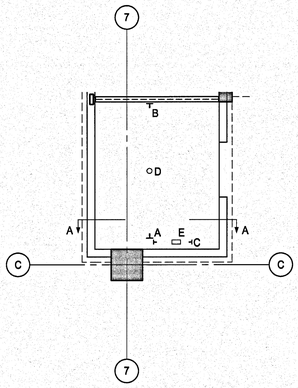

VERTICAL FORCES ONTO PIT FLOOR (lbf)					
RECATION LOCATION	A	B	C	D	E
Z DIRECTION	26600	18200	7800	36700	29500

**VERTICAL REACTIONS A, B AND OCCUR SIMULTANEOUSLY. VERTICAL REACTIONS D AND E OCCUR INDIVIDUALLY AND SEPERATELY FROM A, B AND C.

HOIST BEAM AND LIFE LINE VERTICAL FORCES (lbf)			
RECATION LOCATION	A	B	LIFE LINES
Z DIRECTION	9210	9060	5000

BRKT ABOVE TOPMOST LANDING - IMPACT LOADING REACTIONS (lbf)			
RECATION LOCATION	A	B	C
X DIRECTION	1670	240	50
Y DIRECTION	520	1990	100

BRKT BELOW TOPMOST LANDING - RUNNING REACTIONS (lbf)			
RECATION LOCATION	A	B	C
X DIRECTION	255	255	50
Y DIRECTION	4259	4259	50
MAX DEFLECTION NOT TO EXCEED 0.125" (3mm) DUE TO APPLIED LOADS			

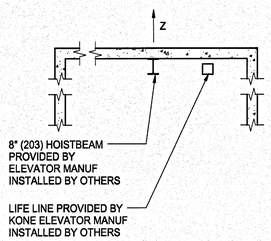

SECTION A-A

ELEVATOR 5 REACTION (2)
NO SCALE

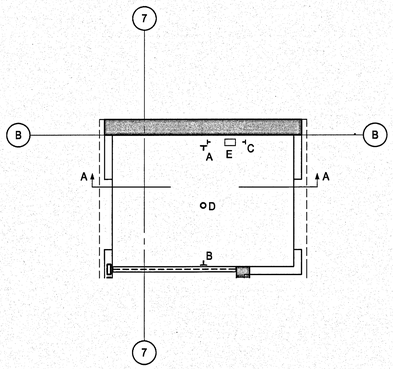

VERTICAL FORCES ONTO PIT FLOOR (lbf)					
RECATION LOCATION	A	B	C	D	E
Z DIRECTION	31800	22600	10400	49100	38200

**VERTICAL REACTIONS A, B AND OCCUR SIMULTANEOUSLY. VERTICAL REACTIONS D AND E OCCUR INDIVIDUALLY AND SEPERATELY FROM A, B AND C.

HOIST BEAM AND LIFE LINE VERTICAL FORCES (lbf)			
RECATION LOCATION	A	B	LIFE LINES
Z DIRECTION	9210	9060	5000

BRKT ABOVE TOPMOST LANDING - IMPACT LOADING REACTIONS (lbf)			
RECATION LOCATION	A	B	C
X DIRECTION	2070	300	50
Y DIRECTION	790	2450	100

BRKT BELOW TOPMOST LANDING - RUNNING REACTIONS (lbf)			
RECATION LOCATION	A	B	C
X DIRECTION	350	300	50
Y DIRECTION	360	260	100
MAX DEFLECTION NOT TO EXCEED 0.125" (3mm) DUE TO APPLIED LOADS			

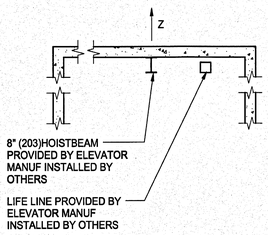

SECTION A-A

ELEVATOR 6 REACTION (3)
NO SCALE

SYM	ZONE	REVISIONS	DATE	APPROVED

WALTER P MOORE
WALTER P. MOORE AND ASSOCIATES, INC.
800 SOUTH ORANGE AVENUE, SUITE 1100
ORLANDO, FLORIDA 32801.3882
PHONE: 407.418.2218 FAX: 407.418.2257
CERTIFICATE OF AUTHORIZATION NO. 3818
007-11000-00
JAIME E. VASQUEZ P.E. NO. 49103
TO THE BEST OF THE ENGINEER'S KNOWLEDGE, THE PLANS AND SPECIFICATIONS COMPLY WITH THE APPLICABLE MINIMUM BUILDING CODES

SIGNATURES	DATE
DRAWN ANDREW MYERS	12.18.13
CHECKED JAIME E. VASQUEZ	12.18.13
SUBMITTED, ARCHENG OF RECORD JAIME E. VASQUEZ	12-18-13
ST of LICENSURE: FL	
LICENSE NO: 49103	
APPROVED JOSEPH M. ALES	12/18/13
BRUCE KINNAIRD	12/18/13

NATIONAL AERONAUTICS AND SPACE ADMINISTRATION
JOHN F. KENNEDY SPACE CENTER, NASA
KENNEDY SPACE CENTER, FLORIDA

KSC CENTRAL CAMPUS
REPLACEMENT HEADQUARTERS BUILDING
PHASE 1
VOL. 1 OF 4

ELEVATOR LOAD PLANS

FILE NO.	SIZE	DWG. NO.
C-12070.00	F	79K39622 VOL 1
PCN. NO. 98745.1a		SHEET 97

S015

KSC FORM 1-11 (3/76)(C/G 3/94)

NOTICE: When Government drawings, specifications, or other data are used for any purpose other than in connection with a definitely related Government procurement operation, the United States Government thereby incurs no responsibility nor obligation whatsoever; and the fact that the Government may have formulated, furnished, or in any way supplied the said drawings, specifications or other data is not to be regarded by implication or otherwise as in any manner licensing the holder or any other person or corporation, or conveying any rights or permission to manufacture, use, or sell any patented invention that may in any way be related thereto.

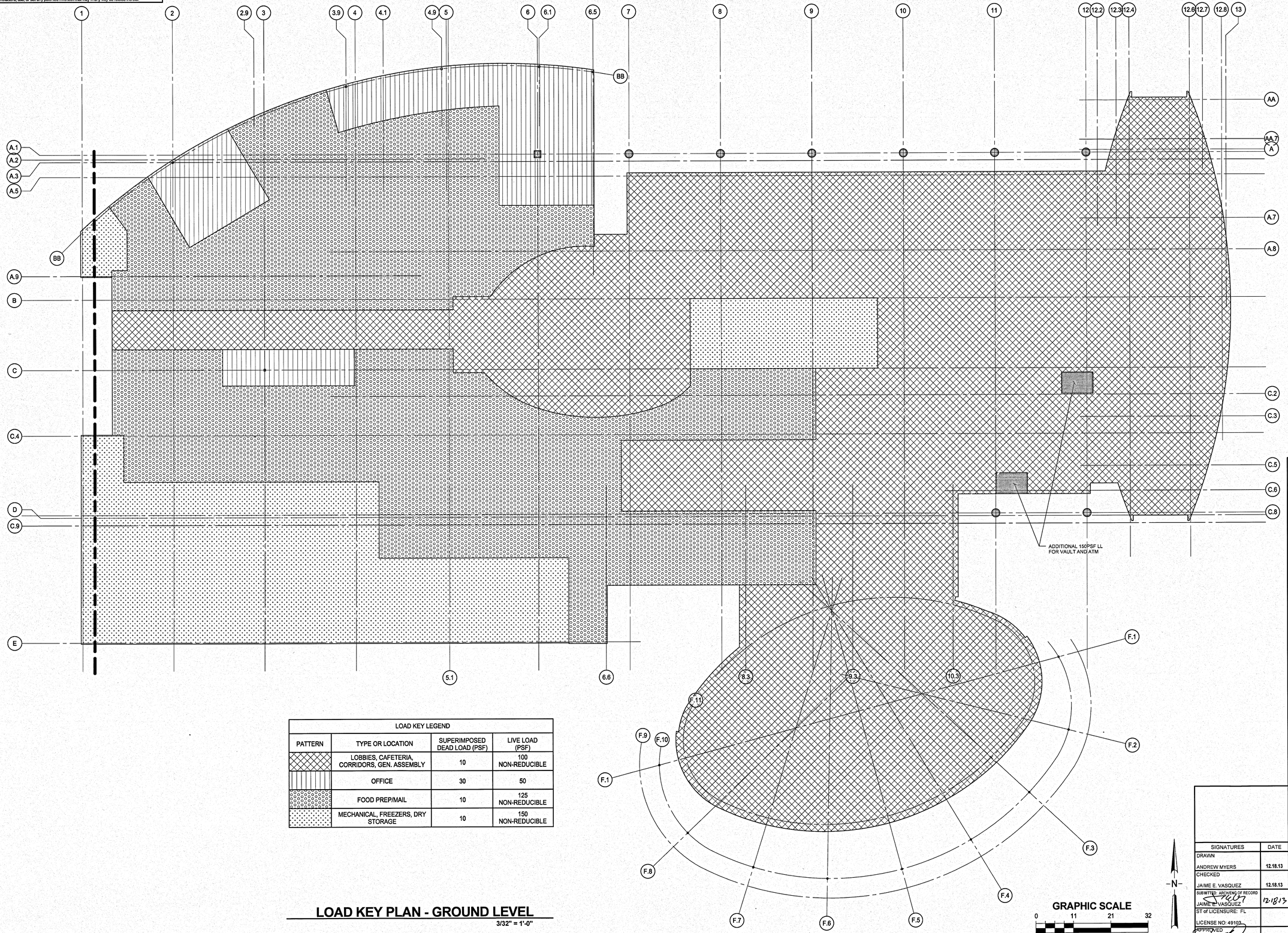

LOAD KEY LEGEND			
PATTERN	TYPE OR LOCATION	SUPERIMPOSED DEAD LOAD (PSF)	LIVE LOAD (PSF)
	LOBBIES, CAFETERIA, CORRIDORS, GEN. ASSEMBLY	10	100 NON-REDUCIBLE
	OFFICE	30	50
	FOOD PREP/MAIL	10	125 NON-REDUCIBLE
	MECHANICAL, FREEZERS, DRY STORAGE	10	150 NON-REDUCIBLE

LOAD KEY PLAN - GROUND LEVEL

3/32" = 1'-0"

GRAPHIC SCALE

0 11 21 32

SCALE IN FEET
3/32" = 1'-0"

N

S020

SYM	ZONE		DATE	APPROVED
		REVISIONS		

WALTER P MOORE
WALTER P. MOORE AND ASSOCIATES, INC.
300 SOUTH ORANGE AVENUE, SUITE 1100
ORLANDO, FLORIDA 32801.3332
PHONE: 407.418.2218 FAX: 407.418.2257
CERTIFICATE OF AUTHORIZATION NO. 3818
507-11223-00
JAIME E. VASQUEZ P.E. NO. 49103
TO THE BEST OF THE ENGINEER'S KNOWLEDGE, THE PLANS AND SPECIFICATIONS COMPLY WITH THE APPLICABLE MINIMUM BUILDING CODES

SIGNATURES	DATE
DRAWN ANDREW MYERS	12.18.13
CHECKED JAIME E. VASQUEZ	12.18.13
SUBMITTED, ARCH/ENG OF RECORD JAIME E. VASQUEZ	12.18.13
ST of LICENSURE: FL LICENSE NO: 49103	
APPROVED JOSEPH M. ALBO	12/18/13
BRUCE KINNAIRD	12/18/13

NATIONAL AERONAUTICS AND SPACE ADMINISTRATION
JOHN F. KENNEDY SPACE CENTER, NASA
KENNEDY SPACE CENTER, FLORIDA

KSC CENTRAL CAMPUS
REPLACEMENT HEADQUARTERS BUILDING
PHASE 1
VOL. 1 OF 4

LOAD KEY PLAN - SLAB ON GRADE

FILE NO.	SIZE	DWG. NO.
C-12070.00	F	79K39622 VOL 1
PCN. NO. 98745.1a		SHEET 98

NOTICE: When Government drawings, specifications, or other data are used for any purpose other than in connection with a definitely related Government procurement operation, the United States Government thereby incurs no responsibility nor obligation whatsoever; and the fact that the Government may have formulated, furnished, or in any way supplied the said drawings, specifications or other data is not to be regarded by implication or otherwise as in any manner licensing the holder or any other person or corporation, or conveying any rights or permission to manufacture, use, or sell any patented invention that may in any way be related thereto.

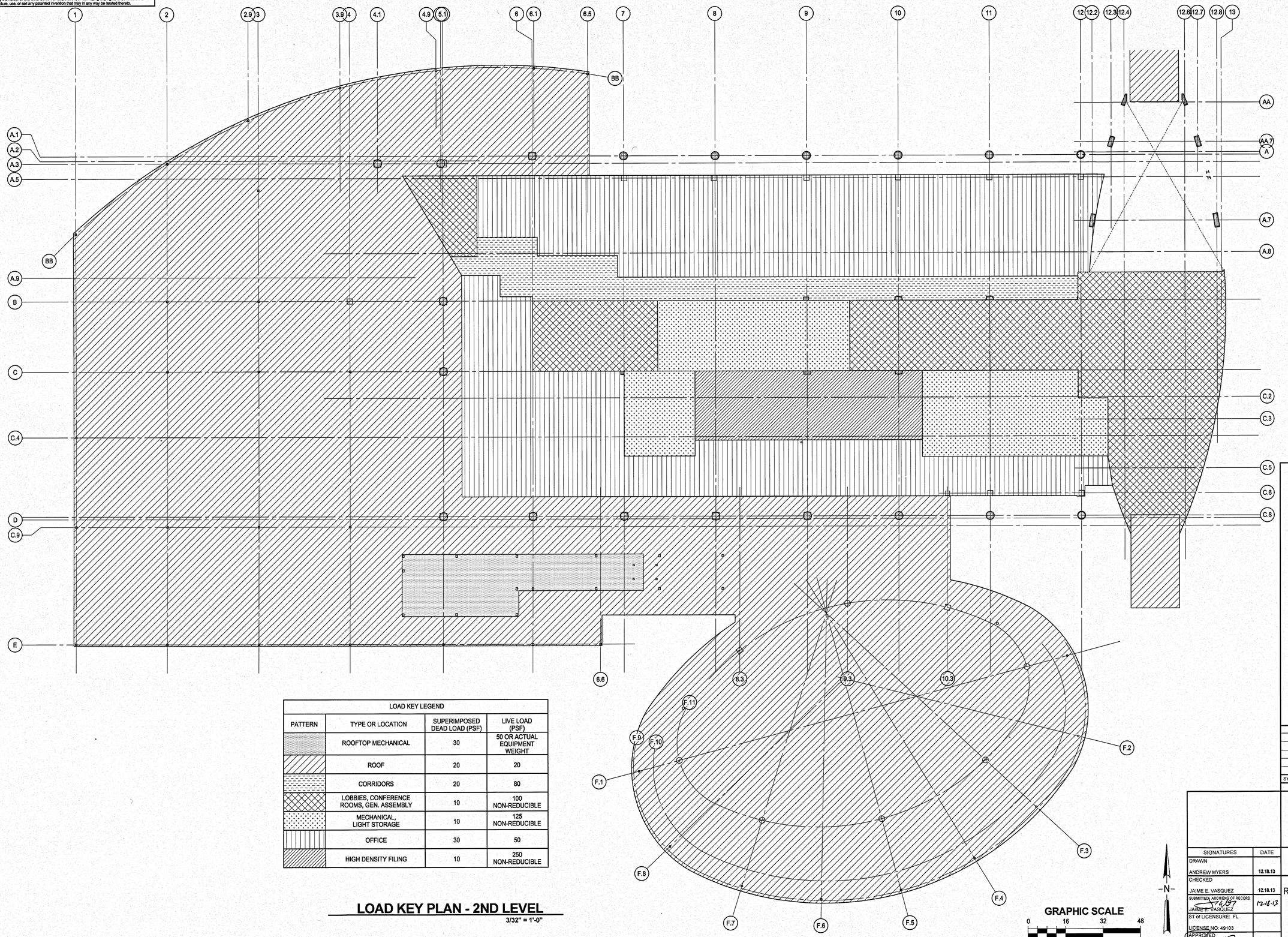

LOAD KEY LEGEND			
PATTERN	TYPE OR LOCATION	SUPERIMPOSED DEAD LOAD (PSF)	LIVE LOAD (PSF)
	ROOFTOP MECHANICAL	30	50 OR ACTUAL EQUIPMENT WEIGHT
	ROOF	20	20
	CORRIDORS	20	80
	LOBBIES, CONFERENCE ROOMS, GEN. ASSEMBLY	10	100 NON-REDUCIBLE
	MECHANICAL, LIGHT STORAGE	10	125 NON-REDUCIBLE
	OFFICE	30	50
	HIGH DENSITY FILING	10	250 NON-REDUCIBLE

LOAD KEY PLAN - 2ND LEVEL

3/32" = 1'-0"

GRAPHIC SCALE

0 16 32 48

SCALE IN FEET
1/16" = 1'-0"

-N-

S021

SYM	ZONE		DATE	APPROVED

REVISIONS

WALTER P MOORE
WALTER P. MOORE AND ASSOCIATES, INC.
800 SOUTH ORANGE AVENUE, SUITE 1180
ORLANDO, FLORIDA 32801.3332
PHONE: 407.418.2219 FAX: 407.418.2267
CERTIFICATE OF AUTHORIZATION NO. 3916
007-11005-00
JAIME E. VASQUEZ P.E. NO. 49103
TO THE BEST OF THE ENGINEER'S KNOWLEDGE, THE PLANS AND SPECIFICATIONS COMPLY WITH THE APPLICABLE MINIMUM BUILDING CODES

SIGNATURES	DATE
DRAWN	
ANDREW MYERS	12.18.13
CHECKED	
JAIME E. VASQUEZ	12.18.13
SUBMITTED, ARCHITECT OF RECORD	
JAIME E. VASQUEZ	12.18.13
ST of LICENSURE: FL	
LICENSE NO: 49103	
APPROVED	
JOSEPH M. TILES	12.18.13
BRUCE KINNAIRD	12/19/13

NATIONAL AERONAUTICS AND SPACE ADMINISTRATION
JOHN F. KENNEDY SPACE CENTER, NASA
KENNEDY SPACE CENTER, FLORIDA

KSC CENTRAL CAMPUS
REPLACEMENT HEADQUARTERS BUILDING
PHASE 1
VOL. 1 OF 4

LOAD KEY PLAN - 2ND LEVEL

FILE NO.	SIZE	DWG. NO.	
C-12070.00	F	79K39622 VOL 1	
PCN. NO. 98745.1a		SHEET 99	

NOTICE: When Government drawings, specifications, or other data are used for any purpose other than in connection with a definitely related Government procurement operation, the United States Government thereby incurs no responsibility nor obligation whatsoever; and the fact that the Government may have formulated, furnished, or in any way supplied the said drawings, specifications or other data is not to be regarded by implication or otherwise as in any manner licensing the holder or any other person or corporation, or conveying any rights or permission to manufacture, use, or sell any patented invention that may in any way be related thereto.

LOAD KEY LEGEND			
PATTERN	TYPE OR LOCATION	SUPERIMPOSED DEAD LOAD (PSF)	LIVE LOAD (PSF)
	CORRIDORS	20	80
	MECHANICAL, LIGHT STORAGE	10	125 NON-REDUCIBLE
	LOBBIES, CONFERENCE ROOMS, GEN. ASSEMBLY	10	100 NON-REDUCIBLE
	OFFICE	30	50
	HIGH DENSITY FILING	10	250 NON-REDUCIBLE

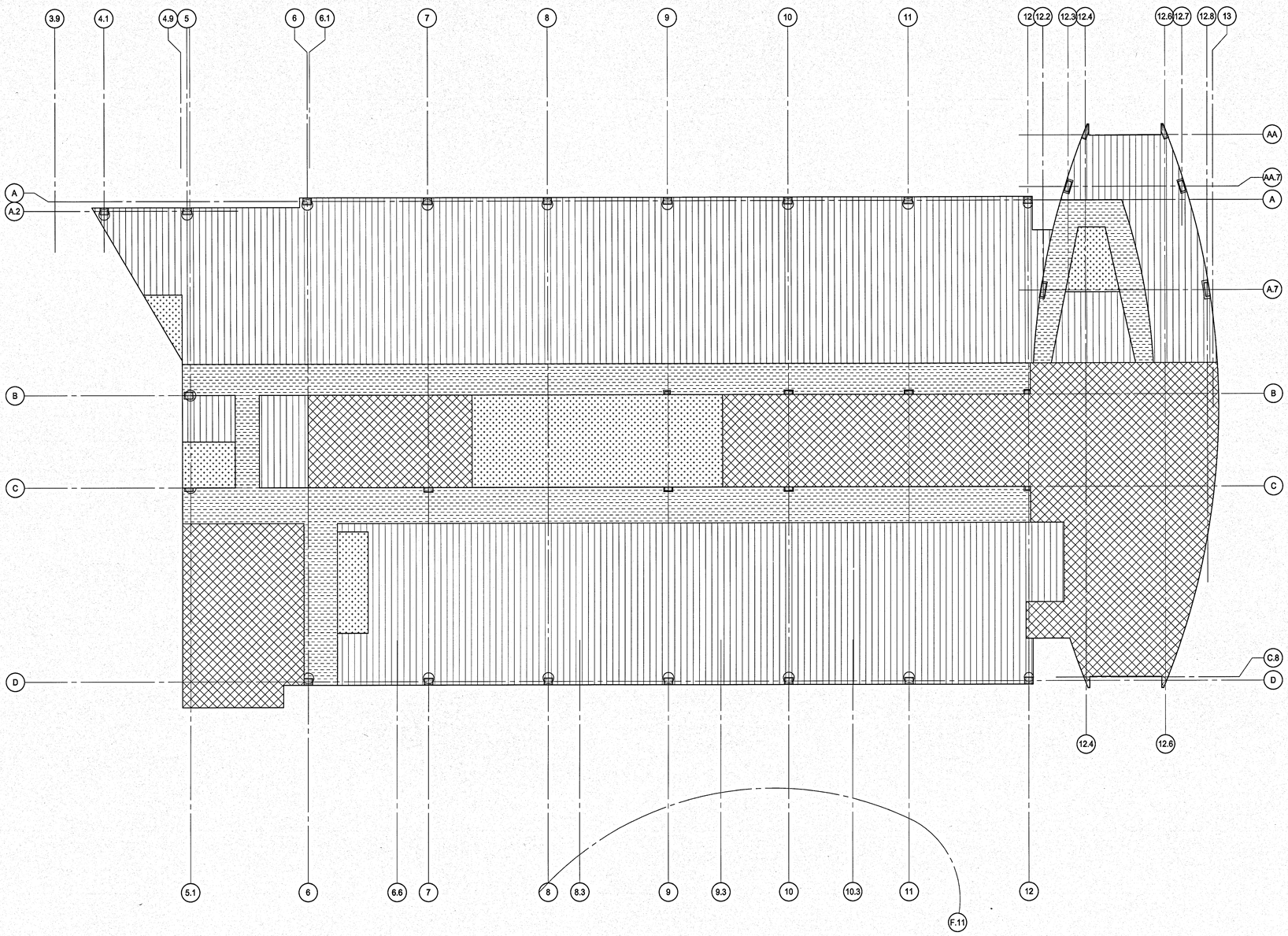

LOAD KEY PLAN - 3RD-6TH LEVELS

3/32" = 1'-0"

GRAPHIC SCALE

0 16 32 48

SCALE IN FEET
1/16" = 1'-0"

N

S022

SIGNATURES	DATE
DRAWN	
ANDREW MYERS	12.18.13
CHECKED	
JAIME E. VASQUEZ	12.18.13
SUBMITTED, ARCHENG OF RECORD	
JAIME E. VASQUEZ	12.18.13
ST of LICENSURE: FL	
LICENSE NO: 49103	
APPROVED	
JOSEPH M. FLAGG	12.18.13
BRUCE KINNAIRD	12/19/13

SYM	ZONE		DATE	APPROVED

REVISIONS

WALTER P MOORE
WALTER P. MOORE AND ASSOCIATES, INC.
300 SOUTH ORANGE AVENUE, SUITE 1100
ORLANDO, FLORIDA 32801.3332
PHONE: 407.418.2218 FAX: 407.418.2267
CERTIFICATE OF AUTHORIZATION NO. 3818
007-11003-00
JAIME E. VASQUEZ, P.E. NO. 49103
TO THE BEST OF THE ENGINEER'S KNOWLEDGE, THE PLANS AND SPECIFICATIONS COMPLY WITH THE APPLICABLE MINIMUM BUILDING CODES

NATIONAL AERONAUTICS AND SPACE ADMINISTRATION
JOHN F. KENNEDY SPACE CENTER, NASA
KENNEDY SPACE CENTER, FLORIDA

KSC CENTRAL CAMPUS
REPLACEMENT HEADQUARTERS BUILDING
PHASE 1
VOL. 1 OF 4

LOAD KEY PLAN - 3RD-6TH LEVELS

FILE NO.	SIZE	DWG. NO.	
C-12070.00	F	79K39622 VOL 1	
PCN. NO. 98745.1a		SHEET 100	

NOTICE: When Government drawings, specifications, or other data are used for any purpose other than in connection with a definitely related Government procurement operation, the United States Government thereby incurs no responsibility nor obligation whatsoever; and the fact that the Government may have formulated, furnished, or in any way supplied the said drawings, specifications or other data is not to be regarded by implication or otherwise as in any manner licensing the holder or any other person or corporation, or conveying any rights or permission to manufacture, use, or sell any patented invention that may in any way be related thereto.

LOAD KEY LEGEND			
PATTERN	TYPE OR LOCATION	SUPERIMPOSED DEAD LOAD (PSF)	LIVE LOAD (PSF)
	CORRIDORS	20	80
	MECHANICAL, LIGHT STORAGE	10	125 NON-REDUCIBLE
	LOBBIES, CONFERENCE ROOMS, GEN. ASSEMBLY	10	100 NON-REDUCIBLE
	OFFICE	30	50
	HIGH DENSITY FILING	10	250 NON-REDUCIBLE

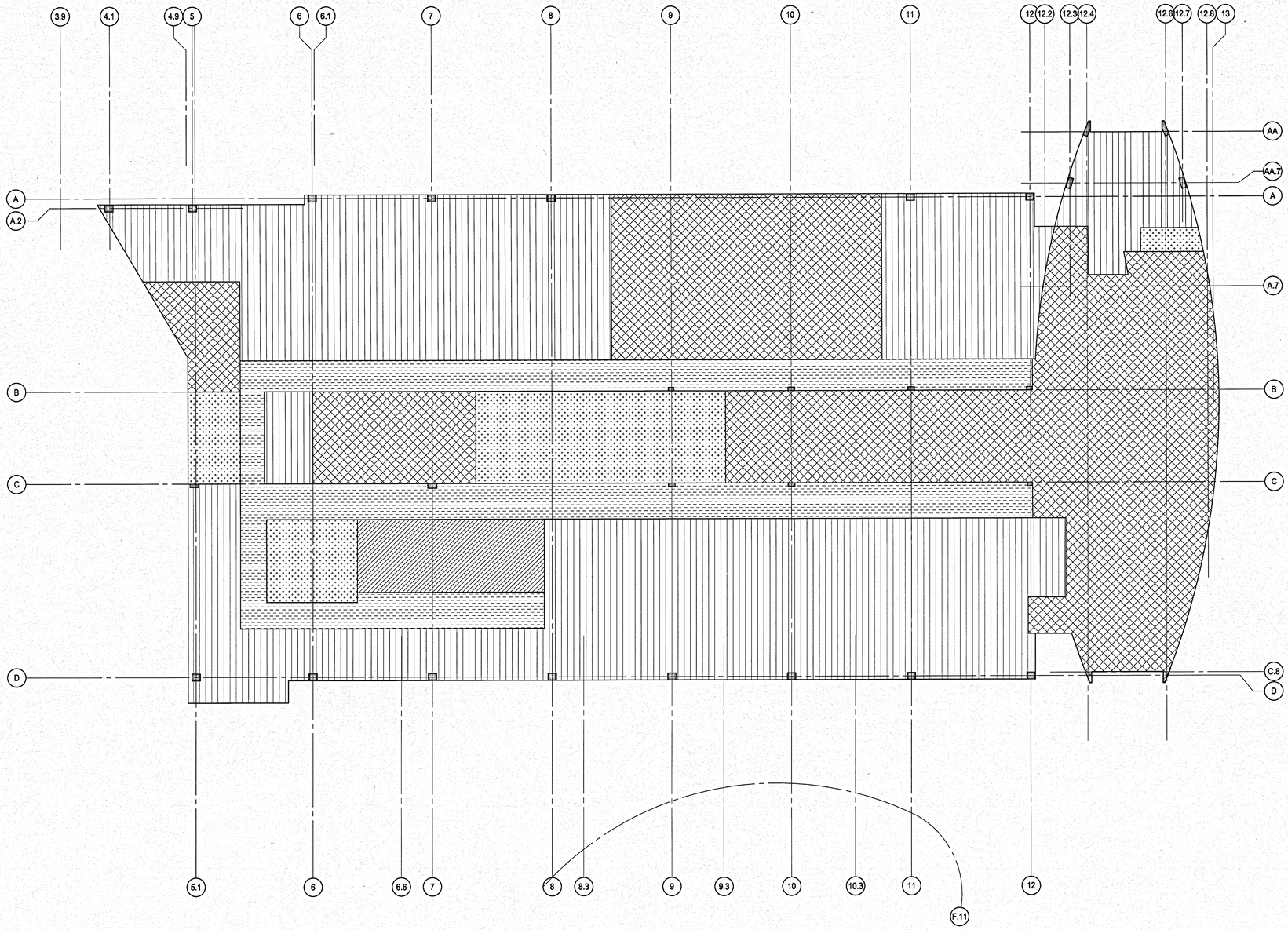

LOAD KEY PLAN - 7TH LEVEL

3/32" = 1'-0"

GRAPHIC SCALE
0 16 32 48
SCALE IN FEET
1/16" = 1'-0"

N

S023

SYM	ZONE	REVISIONS	DATE APPROVED

WALTER P MOORE
WALTER P. MOORE AND ASSOCIATES, INC.
800 SOUTH ORANGE AVENUE, SUITE 1100
ORLANDO, FLORIDA 32801-3332
PHONE: 407.418.2218 FAX: 407.418.2267
CERTIFICATE OF AUTHORIZATION NO. 3818
SSY-11023-00
JAIME E. VASQUEZ P.E. NO. 49103
TO THE BEST OF THE ENGINEER'S KNOWLEDGE, THE PLANS AND SPECIFICATIONS COMPLY WITH THE APPLICABLE MINIMUM BUILDING CODES

SIGNATURES	DATE
DRAWN ANDREW MYERS	12.18.13
CHECKED JAIME E. VASQUEZ	12.18.13
SUBMITTED, ARCHEING OF RECORD JAIME E. VASQUEZ	12-18-13
ST of LICENSURE: FL LICENSE NO: 49103	
APPROVED JOSEPH M. ALES	12-18-13
BRUCE KINNAIRD	12/18/13

NATIONAL AERONAUTICS AND SPACE ADMINISTRATION
JOHN F. KENNEDY SPACE CENTER, NASA
KENNEDY SPACE CENTER, FLORIDA

KSC CENTRAL CAMPUS
REPLACEMENT HEADQUARTERS BUILDING
PHASE 1
VOL. 1 OF 4

LOAD KEY PLAN - 7TH LEVEL

FILE NO.	SIZE	DWG. NO.
C-12070.00	F	79K39622 VOL 1
PCN. NO. 98745.1a		SHEET 101

KSC FORM 1-11 (3/76)(C/G 3/94)

NOTICE: When Government drawings, specifications, or other data are used for any purpose other than in connection with a definitely related Government procurement operation, the United States Government thereby incurs no responsibility nor obligation whatsoever; and the fact that the Government may have formulated, furnished, or in any way supplied the said drawings, specifications or other data is not to be regarded by implication or otherwise as in any manner licensing the holder or any other person or corporation, or conveying any rights or permission to manufacture, use, or sell any patented invention that may in any way be related thereto.

LOAD KEY LEGEND			
PATTERN	TYPE OR LOCATION	SUPERIMPOSED DEAD LOAD (PSF)	LIVE LOAD (PSF)
	ROOF	20	20
	MECHANICAL PENTHOUSE	10	150 NON-REDUCIBLE

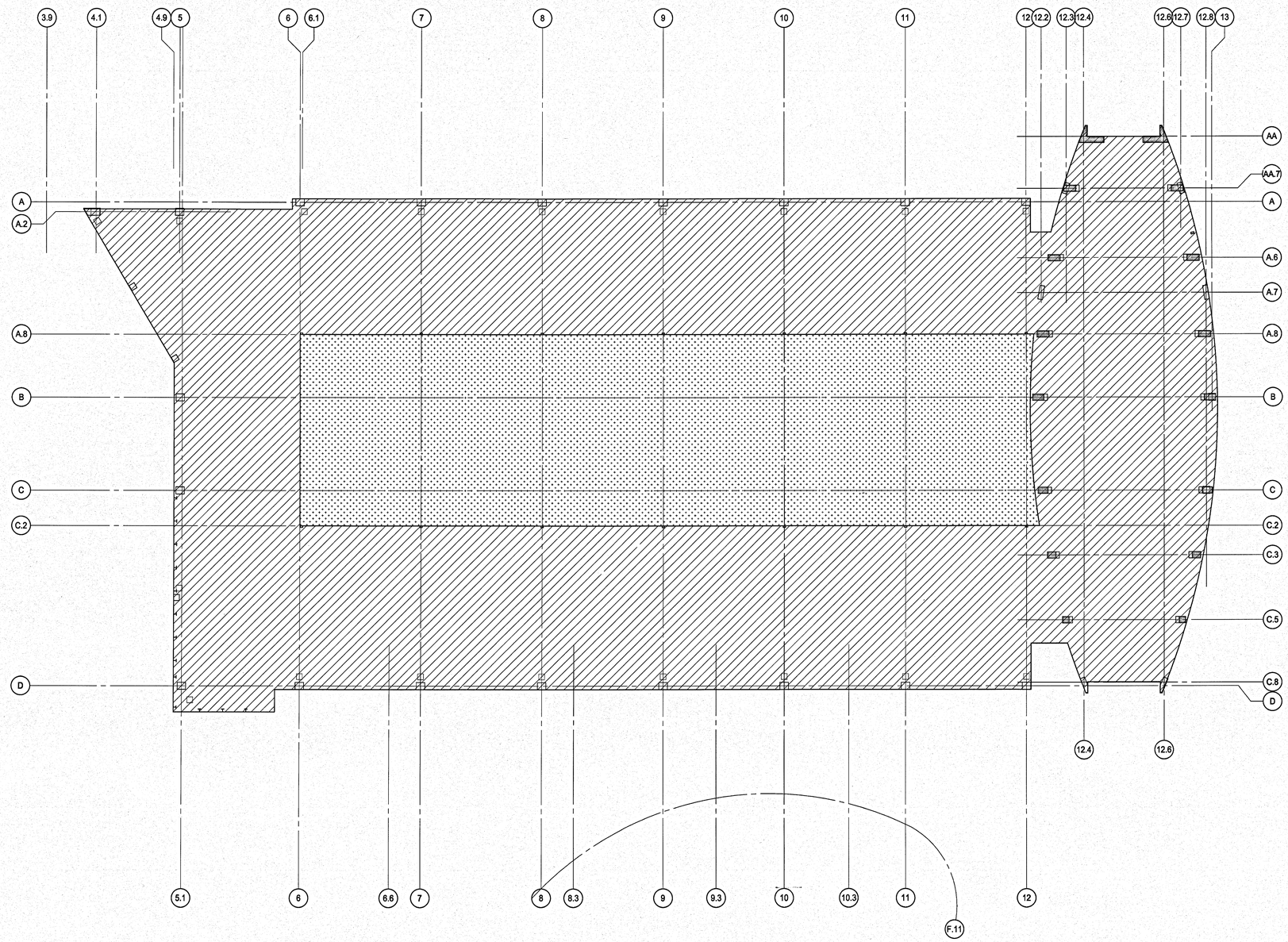

LOAD KEY PLAN - ROOF LEVEL

3/32" = 1'-0"

GRAPHIC SCALE
0 16 32 48
SCALE IN FEET
1/16" = 1'-0"

N

S024

SYM	ZONE		DATE APPROVED
		REVISIONS	

WALTER P MOORE
WALTER P. MOORE AND ASSOCIATES, INC.
300 SOUTH ORANGE AVENUE, SUITE 1100
ORLANDO, FLORIDA 32801.8832
PHONE: 407.418.2218 FAX: 407.418.2267
CERTIFICATE OF AUTHORIZATION NO. 3818
057-111003-00
JAIME E. VASQUEZ P.E. NO. 49103
TO THE BEST OF THE ENGINEER'S KNOWLEDGE, THE PLANS AND SPECIFICATIONS COMPLY WITH THE APPLICABLE MINIMUM BUILDING CODES

SIGNATURES	DATE
DRAWN ANDREW MYERS	12.18.13
CHECKED JAIME E. VASQUEZ	12.18.13
SUBMITTED, NOMINEE OF RECORD JAIME E. VASQUEZ	12.18.13
ST of LICENSURE: FL	
LICENSE NO: 49103	
APPROVED JOSEPH M. KLEE	12.18.13
BRUCE KINNAIRD	12/18/13

NATIONAL AERONAUTICS AND SPACE ADMINISTRATION
JOHN F. KENNEDY SPACE CENTER, NASA
KENNEDY SPACE CENTER, FLORIDA

KSC CENTRAL CAMPUS
REPLACEMENT HEADQUARTERS BUILDING
PHASE 1
VOL. 1 OF 4

LOAD KEY PLAN - ROOF LEVEL

FILE NO.	SIZE	DWG. NO.
C-12070.00	F	79K39622 VOL 1
PCN. NO. 98745.1a		SHEET 102

NOTICE: When Government drawings, specifications, or other data are used for any purpose other than in connection with a definitely related Government procurement operation, the United States Government thereby incurs no responsibility nor obligation whatsoever; and the fact that the Government may have formulated, furnished, or in any way supplied the said drawings, specifications or other data is not to be regarded by implication or otherwise as in any manner licensing the holder or any other person or corporation, or conveying any rights or permission to manufacture, use, or sell any patented invention that may in any way be related thereto.

LOAD KEY LEGEND			
PATTERN	TYPE OR LOCATION	SUPERIMPOSED DEAD LOAD (PSF)	LIVE LOAD (PSF)
	ROOF	20	50

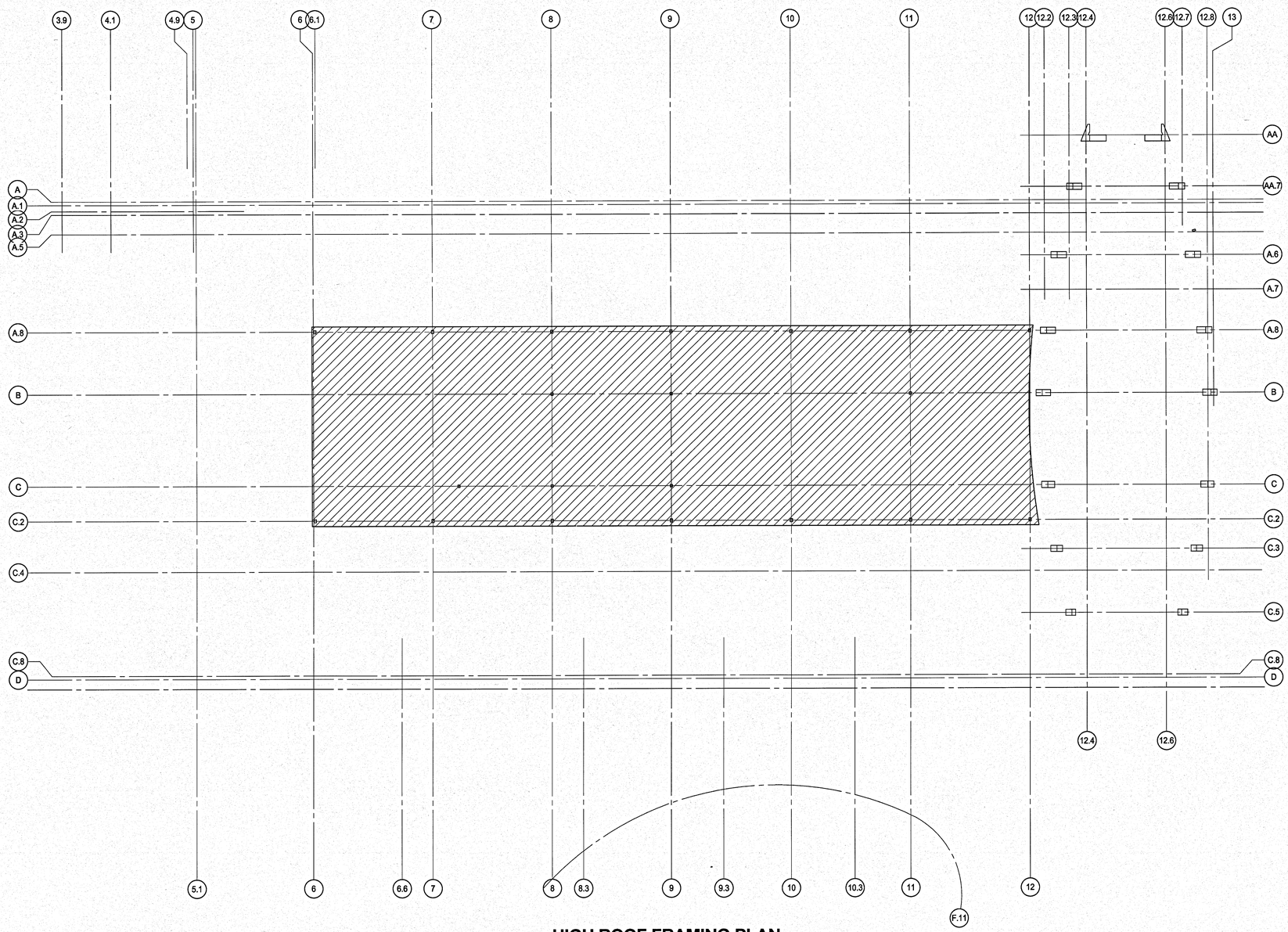

HIGH ROOF FRAMING PLAN

3/32" = 1'-0"

GRAPHIC SCALE

0 16 32 48

SCALE IN FEET

1/16" = 1'-0"

-N-

S025

SIGNATURES	DATE
DRAWN	
ANDREW MYERS	12.18.13
CHECKED	
JAIME E. VASQUEZ	12.18.13
SUBMITTED - ARCHENG OF RECORD	
JAIME E. VASQUEZ	12.18.13
ST of LICENSURE: FL	
LICENSE NO: 49103	
APPROVED	
JOSEPH M. KLEE	12/18/13
BRUCE KINNAIRD	12/18/13

SYM	ZONE		DATE	APPROVED

REVISIONS

WALTER P MOORE
WALTER P. MOORE AND ASSOCIATES, INC.
300 SOUTH ORANGE AVENUE, SUITE 1100
ORLANDO, FLORIDA 32801.8552
PHONE: 407.418.2218 FAX: 407.418.2257
CERTIFICATE OF AUTHORIZATION NO. 3818
507-11003-09
JAIME E. VASQUEZ P.E. NO. 49103
TO THE BEST OF THE ENGINEER'S KNOWLEDGE, THE PLANS AND SPECIFICATIONS COMPLY WITH THE APPLICABLE MINIMUM BUILDING CODES

NATIONAL AERONAUTICS AND SPACE ADMINISTRATION
JOHN F. KENNEDY SPACE CENTER, NASA
KENNEDY SPACE CENTER, FLORIDA

KSC CENTRAL CAMPUS
REPLACEMENT HEADQUARTERS BUILDING
PHASE 1
VOL. 1 OF 4

LOAD KEY PLAN - HIGH ROOF LEVEL

FILE NO.	SIZE	DWG. NO.	
C-12070.00	F	79K39622 VOL 1	
PCN. NO. 98745.1a		SHEET 103	

NOTICE: When Government drawings, specifications, or other data are used for any purpose other than in connection with a definitely related Government procurement operation, the United States Government thereby incurs no responsibility nor obligation whatsoever; and the fact that the Government may have formulated, furnished, or in any way supplied the said drawings, specifications or other data is not to be regarded by implication or otherwise as in any manner licensing the holder or any other person or corporation, or conveying any rights or permission to manufacture, use, or sell any patented invention that may in any way be related thereto.

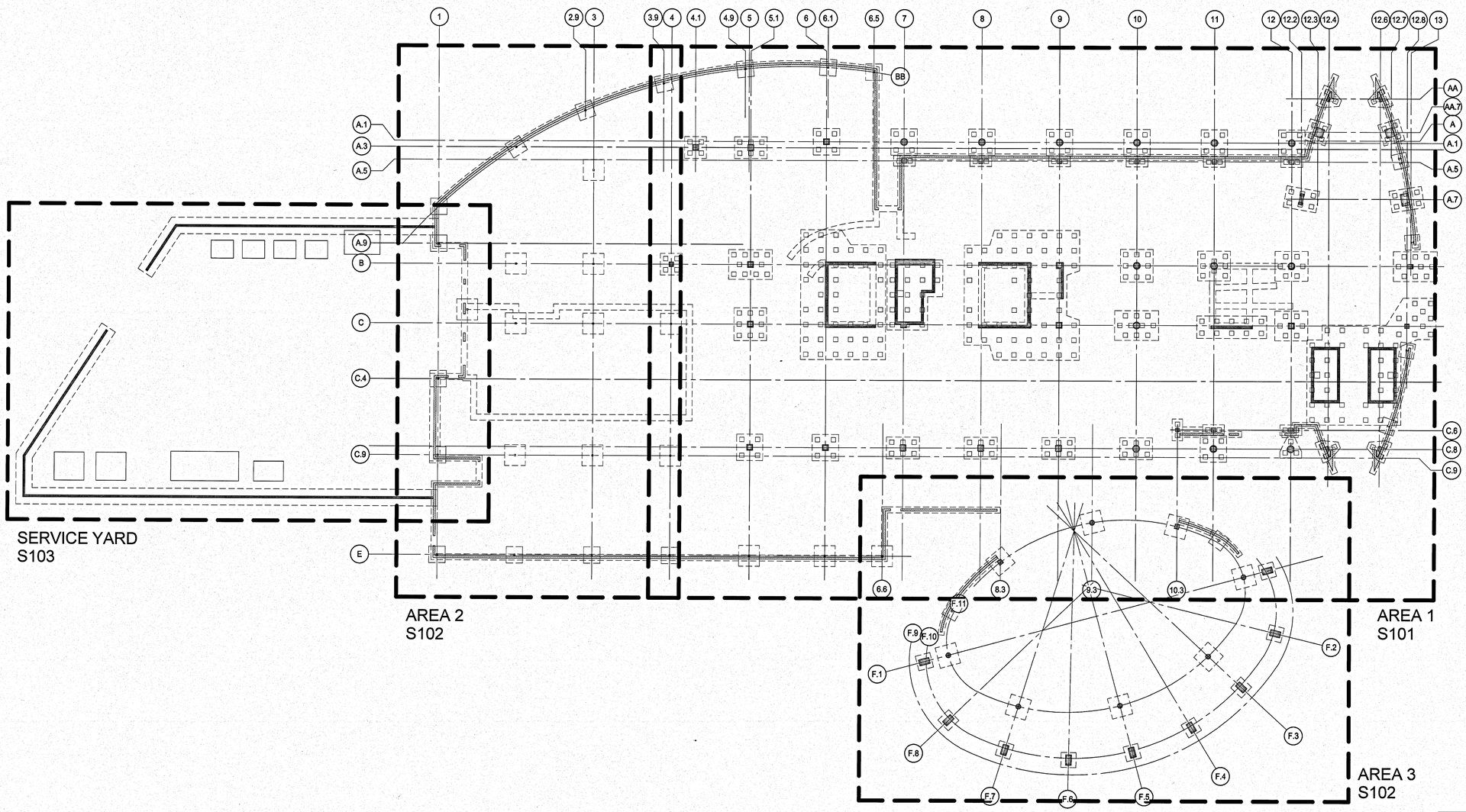

FOUNDATION PLAN - OVERALL

1/16" = 1'-0"

GRAPHIC SCALE
0 16 32 48
SCALE IN FEET
1/16" = 1'-0"

S100

SYM	ZONE		DATE	APPROVED
		REVISIONS		

WALTER P MOORE
WALTER P. MOORE AND ASSOCIATES, INC.
900 SOUTH ORANGE AVENUE, SUITE 1100
ORLANDO, FLORIDA 32801.3332
PHONE: 407.418.2218 FAX: 407.418.2257
CERTIFICATE OF AUTHORIZATION NO. 3818
007-11003.00
JAIME E. VASQUEZ P.E. NO. 49103
TO THE BEST OF THE ENGINEER'S KNOWLEDGE, THE PLANS AND SPECIFICATIONS COMPLY WITH THE APPLICABLE MINIMUM BUILDING CODES

SIGNATURES	DATE
DRAWN	
ANDREW MYERS	12.18.13
CHECKED	
JAIME E. VASQUEZ	12.18.13
SUBMITTED: KRCH/WPM OF RECORD	
JAIME E. VASQUEZ	12.18.13
ST of LICENSURE: FL	
LICENSE NO: 49103	
APPROVED	
JOSEPH M. ALES	12.18.13
BRUCE KINNAIRD	12/18/13

NATIONAL AERONAUTICS AND SPACE ADMINISTRATION
JOHN F. KENNEDY SPACE CENTER, NASA
KENNEDY SPACE CENTER, FLORIDA

KSC CENTRAL CAMPUS
REPLACEMENT HEADQUARTERS BUILDING
PHASE 1
VOL. 1 OF 4

FOUNDATION PLAN - OVERALL

FILE NO.	SIZE	DWG. NO.
C-12070.00	F	79K39622 VOL 1
PCN. NO. 98745.1a		SHEET 104

NOTICE: When Government drawings, specifications, or other data are used for any purpose other than in connection with a definitely related Government procurement operation, the United States Government thereby incurs no responsibility nor obligation whatsoever; and the fact that the Government may have formulated, furnished, or in any way supplied the said drawings, specifications or other data is not to be regarded by implication or otherwise as in any manner licensing the holder or any other person or corporation, or conveying any rights or permission to manufacture, use, or sell any patented invention that may in any way be related thereto.

FOUNDATION LEVEL - AREA 1

1/8" = 1'-0"

PLAN NOTES

1. CIVIL DRAWINGS ELEVATION 11.30' = DATUM ELEVATION 100'-0".
2. TOP OF FOUNDATION ELEVATION IS 98'-0", UNLESS NOTED OTHERWISE ON PLAN. SHEAR WALL FOUNDATIONS AND ELEVATOR PIT FOUNDATIONS SHALL BE AT ELEVATION = 94'-7", UNO ON PLAN.
3. FLOOR STRUCTURE IS A 5" THICK NORMALWEIGHT CONCRETE SLAB-ON-GRADE REINFORCED WITH WWR 6x6-W2.9xW2.9. MECHANICAL ROOM AND STORAGE ROOM SLAB SHALL BE 6" THICK NORMAL WEIGHT CONCRETE SLAB-ON-GRADE REINFORCED WITH WWR 6x6-W4.0xW4.0.
4. PROVIDE 2-#4x4'-0" ADDITIONAL SLAB REINFORCEMENT AT ALL RE-ENTRANT CORNERS.
5. SPREAD FOOTINGS SHALL BE CENTERED ON THE CENTROID OF SUPPORTED COLUMN, UNLESS NOTED OTHERWISE.
6. WALL FOOTINGS SHALL BE CENTERED ON THE SUPPORTED WALL, UNLESS NOTED OTHERWISE. REFER TO ARCH DRAWINGS FOR WALL EXTENTS.
7. REFER TO SHEETS S410-S413 FOR FOUNDATION AND SLAB-ON-GRADE SECTIONS AND DETAILS. REFER TO FOUNDATION PART II IN GENERAL NOTES FOR PILE REQUIREMENTS.
8. REFER TO SHEET S411 FOR FOUNDATION SCHEDULES.
9. REFER TO SHEETS S212-S213 FOR COLUMN SCHEDULES.
10. REFER TO SHEETS S202-S203 FOR SHEAR WALL ELEVATIONS. REFER TO S221 FOR SHEAR WALL PARTIAL PLANS.
11. REFER TO ARCHITECTURAL DRAWINGS FOR EXTENTS AND DIMENSIONS OF RAISED OR DEPRESSED SLAB AREAS, SLOPES, CURBS, AND DRAINS. REFER TO TYPICAL DETAILS FOR REINFORCEMENT REQUIREMENTS.
12. REFER TO MECHANICAL, ELECTRICAL, AND PLUMBING DRAWINGS FOR SLAB PENETRATIONS AND UNDERGROUND UTILITIES. COORDINATE SUMP PUMP PIT LOCATIONS AND SIZES WITH ELEVATOR MFRS AND SUMP PUMP MFRS.
13. CONTRACTOR TO FIELD VERIFY ALL EXISTING CONDITIONS AND DIMENSIONS. NOTIFY ARCHITECT AND STRUCTURAL ENGINEER OF ANY DISCREPANCIES.
14. COORDINATE LOCATION AND EXTENT OF SERVICE YARD FREE-STANDING WALL WITH CIVIL AND ARCHITECTURAL DRAWINGS.
15. HOUSEKEEPING PADS. REFER TO TYPICAL DETAIL AND COORDINATE WITH ARCHITECTURAL AND MEP.
16. REFERENCE S601 FOR CMU TYPICAL DETAILS.
17. GB1 SHALL BE 24"X18" NWC GRADEBEAM WITH TOP OF BEAM AT 99'-0". GRADE BEAM TO BE REINFORCED WITH (12)-#10 (4 EACH FACE) WITH #3 S15 STIRRUPS AT 16" SPACING.
18. MW1 SHALL BE 8" CMU REINFORCED WITH #5@48"; DOWELS TO MATCH VERTICAL REINFORCEMENT.
19. CONTRACTOR SHALL COORDINATE SIZE AND LOCATION OF ALL MEP OPENINGS (INCLUDING THOSE NOT EXPLICITLY DEFINED IN THE STRUCTURAL DRAWINGS) PRIOR TO FABRICATION OF REINFORCEMENT AND CASTING OF CONCRETE.
20. CONTRACTOR SHALL COORDINATE ALL ELEVATOR OPENINGS, PIT DEPTHS, HOIST BEAMS AND SUPPORTS, SUMP PIT DIMENSIONS, AND CLEARANCES AND REQUIREMENTS AND ELEVATOR MANUFACTURER.

KEYPLAN

GRAPHIC SCALE
0 8 16 24
SCALE IN FEET
1/8" = 1'-0"

S101

SYM	ZONE		DATE	APPROVED

REVISIONS

SIGNATURES	DATE
DRAWN	
ANDREW MYERS	12.18.13
CHECKED	
JAIME E. VASQUEZ	12.18.13
SUBMITTED, YACHENG OF RECORD	
JAIME E. VASQUEZ	12.18.13
ST of LICENSURE: FL	
LICENSE NO: 49103	
APPROVED	
JOSEPH MYERS	12-18-13
BRUCE KINNAIRD	12/18/13

WALTER P MOORE
WALTER P. MOORE AND ASSOCIATES, INC.
300 SOUTH ORANGE AVENUE, SUITE 1100
ORLANDO, FLORIDA 32801.3332
PHONE: 407.418.2218 FAX: 407.418.2257
CERTIFICATE OF AUTHORIZATION NO. 3818
597-11223-00
JAIME E. VASQUEZ P.E. NO. 49103
TO THE BEST OF THE ENGINEER'S KNOWLEDGE, THE PLANS AND SPECIFICATIONS COMPLY WITH THE APPLICABLE MINIMUM BUILDING CODES

NATIONAL AERONAUTICS AND SPACE ADMINISTRATION
JOHN F. KENNEDY SPACE CENTER, NASA
KENNEDY SPACE CENTER, FLORIDA

KSC CENTRAL CAMPUS
REPLACEMENT HEADQUARTERS BUILDING
PHASE 1
VOL. 1 OF 4

FOUNDATION PLAN - AREA 1

FILE NO.	SIZE	DWG. NO.
C-12070.00	F	79K39622 VOL 1
PCN. NO. 98745.1a		SHEET 105

KSC FORM 1-11 (3/76)(C/G 3/94)

NOTICE: When Government drawings, specifications, or other data are used for any purpose other than in connection with a definitely related Government procurement operation, the United States Government thereby incurs no responsibility nor obligation whatsoever; and the fact that the Government may have formulated, furnished, or in any way supplied the said drawings, specifications or other data is not to be regarded by implication or otherwise as in any manner licensing the holder or any other person or corporation, or conveying any rights or permission to manufacture, use, or sell any patented invention that may in any way be related thereto.

DIMENSION PLAN FOUNDATION LEVEL - AREA 1

1/8" = 1'-0"

GRAPHIC SCALE

0 8 16 24

SCALE IN FEET
1/8" = 1'-0"

KEYPLAN

S101D

SIGNATURES	DATE
DRAWN	
ANDREW MYERS	12.18.13
CHECKED	
JAIME E. VASQUEZ	12.18.13
SUBMITTED ARCH/ENG OF RECORD	
JAIME E. VASQUEZ	12.18.13
ST of LICENSURE: FL	
LICENSE NO: 49103	
APPROVED	
JOSEPH M. ALES	12.18.13
BRUCE KINNAIRD	12/18/13

SYM | ZONE | DATE APPROVED

REVISIONS

WALTER P MOORE
WALTER P. MOORE AND ASSOCIATES, INC.
800 SOUTH ORANGE AVENUE, SUITE 1180
ORLANDO, FLORIDA 32801.3532
PHONE: 407.418.2218 FAX: 407.418.2267
CERTIFICATE OF AUTHORIZATION NO. 3818
001-11029-00
JAIME E. VASQUEZ P.E. NO. 49103
TO THE BEST OF THE ENGINEER'S KNOWLEDGE, THE PLANS AND SPECIFICATIONS COMPLY WITH THE APPLICABLE MINIMUM BUILDING CODES

NATIONAL AERONAUTICS AND SPACE ADMINISTRATION
JOHN F. KENNEDY SPACE CENTER, NASA
KENNEDY SPACE CENTER, FLORIDA

KSC CENTRAL CAMPUS
REPLACEMENT HEADQUARTERS BUILDING
PHASE 1
VOL. 1 OF 4

DIMENSION PLAN - FOUNDATION - AREA 1

FILE NO.	SIZE	DWG. NO.
C-12070.00	F	79K39622 VOL 1

PCN. NO. 98745.1a | SHEET 106

KSC FORM 1-11 (3/76)(C/G 3/94)

NOTICE: When Government drawings, specifications, or other data are used for any purpose other than in connection with a definitely related Government procurement operation, the United States Government thereby incurs no responsibility nor obligation whatsoever; and the fact that the Government may have formulated, furnished, or in any way supplied the said drawings, specifications or other data is not to be regarded by implication or otherwise as in any manner licensing the holder or any other person or corporation, or conveying any rights or permission to manufacture, use, or sell any patented invention that may in any way be related thereto.

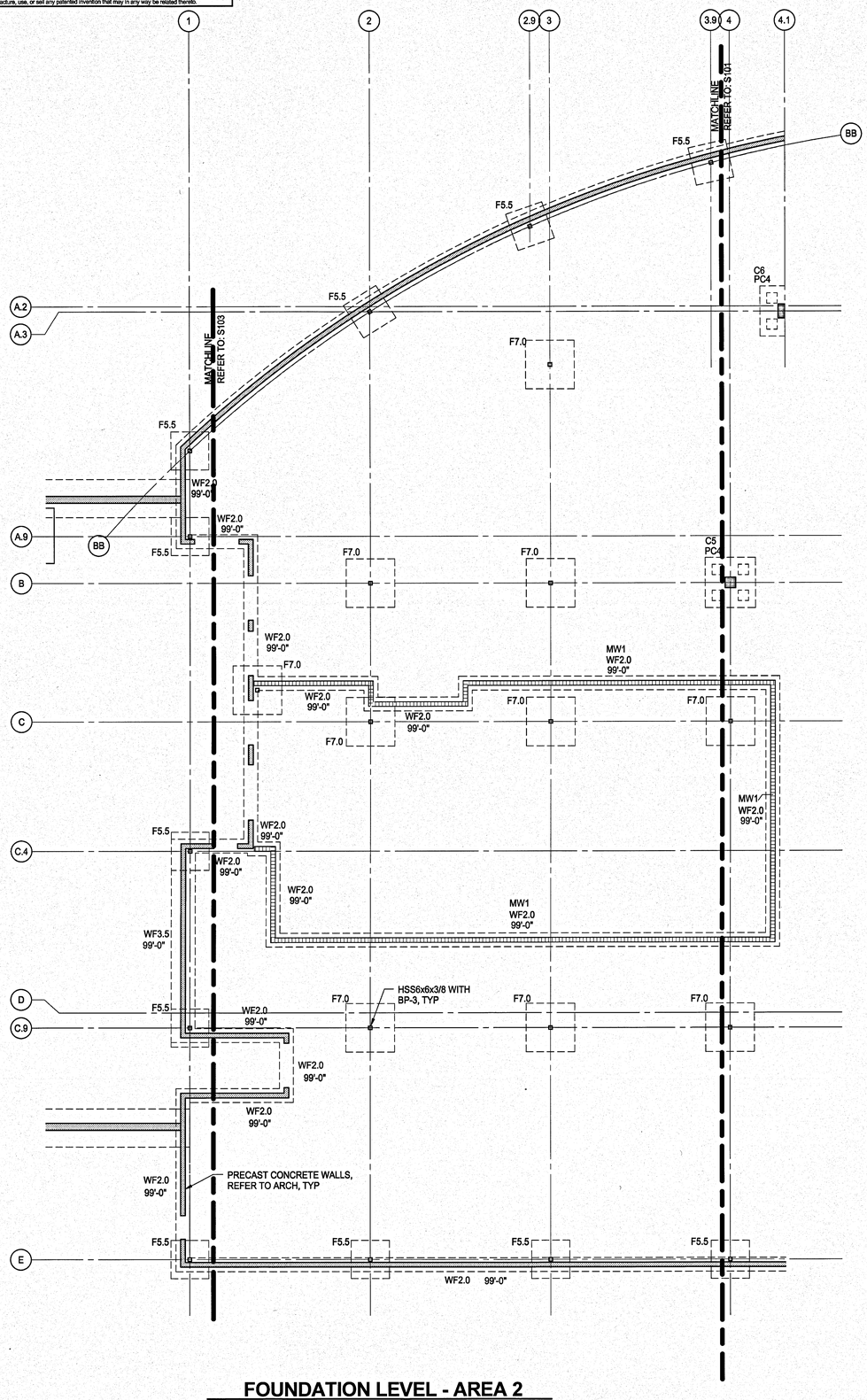

FOUNDATION LEVEL - AREA 2

1/8" = 1'-0"

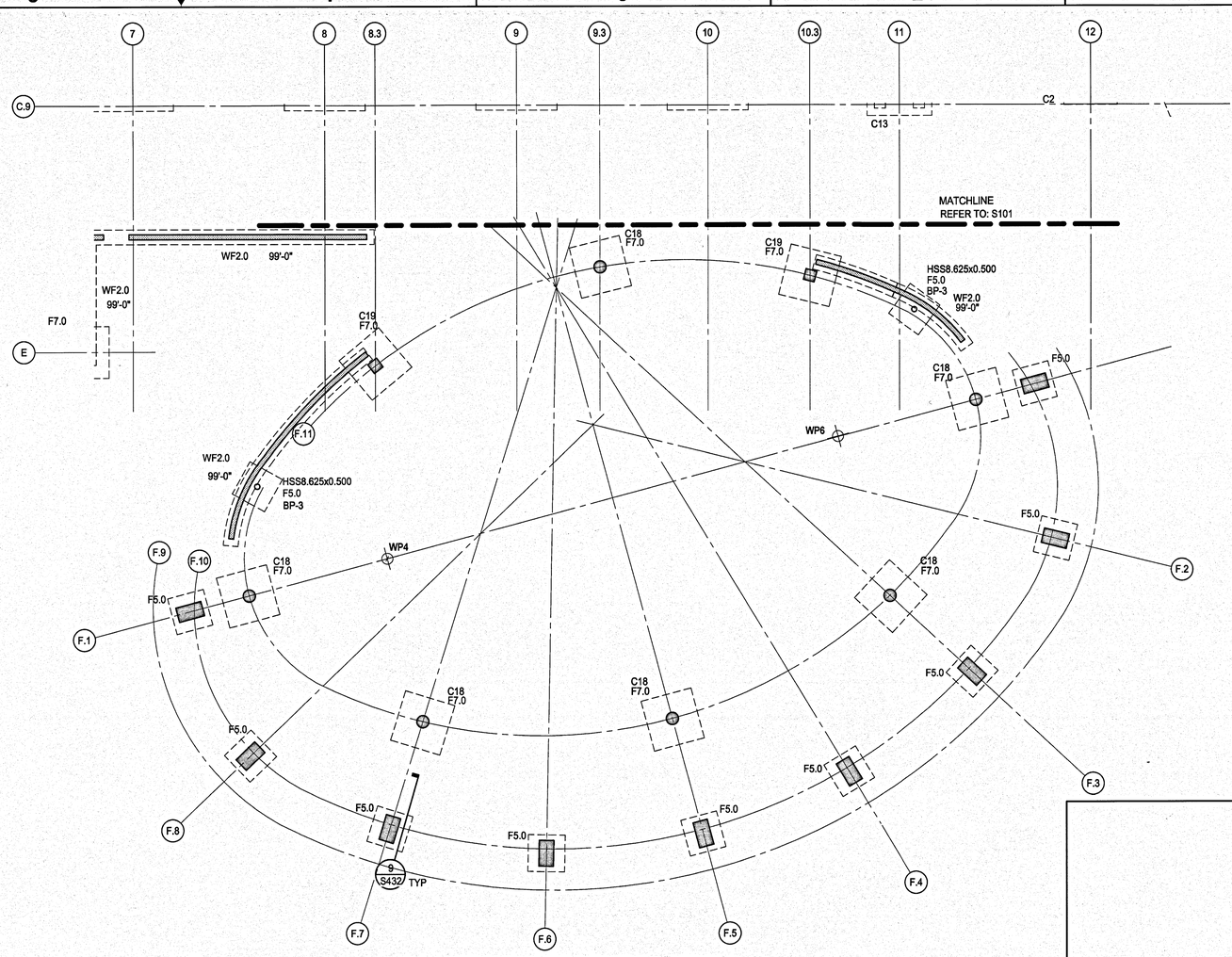

FOUNDATION LEVEL - AREA 3

1/8" = 1'-0"

PLAN NOTES

1. CIVIL DRAWINGS ELEVATION 11.30' = DATUM ELEVATION 100'-0".
2. TOP OF FOUNDATION ELEVATION IS 98'-0", UNLESS NOTED OTHERWISE ON PLAN. SHEAR WALL FOUNDATIONS AND ELEVATOR PIT FOUNDATIONS SHALL BE AT ELEVATION = 94'-7", UNO ON PLAN.
3. FLOOR STRUCTURE IS A 5" THICK NORMALWEIGHT CONCRETE SLAB-ON-GRADE REINFORCED WITH WWR 6x6-W2.9xW2.9. MECHANICAL ROOM AND STORAGE ROOM SLAB SHALL BE 6" THICK NORMAL WEIGHT CONCRETE SLAB-ON-GRADE REINFORCED WITH WWR 6x6-W4.0xW4.0.
4. PROVIDE 2-#4x4'-0" ADDITIONAL SLAB REINFORCEMENT AT ALL RE-ENTRANT CORNERS.
5. SPREAD FOOTINGS SHALL BE CENTERED ON THE CENTROID OF SUPPORTED COLUMN, UNLESS NOTED OTHERWISE.
6. WALL FOOTINGS SHALL BE CENTERED ON THE SUPPORTED WALL, UNLESS NOTED OTHERWISE. REFER TO ARCH DRAWINGS FOR WALL EXTENTS.
7. REFER TO SHEETS S410-S414 FOR FOUNDATION AND SLAB-ON-GRADE SECTIONS AND DETAILS. REFER TO FOUNDATION PART II IN GENERAL NOTES FOR PILE REQUIREMENTS.
8. REFER TO SHEET S411 FOR FOUNDATION SCHEDULES.
9. REFER TO SHEETS S215 FOR COLUMN SCHEDULES AND REFER TO S211-S212 FOR BEAM SCHEDULES.
10. REFER TO SHEETS S202-S203 FOR SHEAR WALL ELEVATIONS. REFER TO S221 FOR SHEAR WALL PARTIAL PLANS.
11. REFER TO ARCHITECTURAL DRAWINGS FOR EXTENTS AND DIMENSIONS OF RAISED OR DEPRESSED SLAB AREAS, SLOPES, CURBS, AND DRAINS. REFER TO TYPICAL DETAILS FOR REINFORCEMENT REQUIREMENTS.
12. REFER TO MECHANICAL, ELECTRICAL, AND PLUMBING DRAWINGS FOR SLAB PENETRATIONS AND UNDERGROUND UTILITIES. COORDINATE SUMP PUMP PIT LOCATIONS AND SIZES WITH ELEVATOR MFRS AND SUMP PUMP MFRS.
13. CONTRACTOR TO FIELD VERIFY ALL EXISTING CONDITIONS AND DIMENSIONS. NOTIFY ARCHITECT AND STRUCTURAL ENGINEER OF ANY DISCREPANCIES.
14. COORDINATE LOCATION AND EXTENT OF SERVICE YARD FREE-STANDING WALL WITH CIVIL AND ARCHITECTURAL DRAWINGS.
15. HOUSEKEEPING PADS. REFER TO TYPICAL DETAIL AND COORDINATE WITH ARCHITECTURAL AND MEP.
16. REFERENCE S601 FOR CMU TYPICAL DETAILS.
17. GB1 SHALL BE 18"X18" NWC GRADEBEAM WITH TOP OF BEAM AT 99'-0". GRADE BEAM TO BE REINFORCED WITH (8)-#8 (3 EACH FACE) WITH #3 S15 STIRRUPS AT 16" SPACING.
18. MW1 SHALL BE 8" CMU REINFORCED WITH #5@48"; DOWELS TO MATCH VERTICAL REINFORCEMENT.
19. CONTRACTOR SHALL COORDINATE SIZE AND LOCATION OF ALL MEP OPENINGS (INCLUDING THOSE NOT EXPLICITLY DEFINED IN THE STRUCTURAL DRAWINGS) PRIOR TO FABRICATION OF REINFORCEMENT AND CASTING OF CONCRETE.
20. CONTRACTOR SHALL COORDINATE ALL ELEVATOR OPENINGS, PIT DEPTHS, HOIST BEAMS AND SUPPORTS, SUMP PIT DIMENSIONS, AND CLEARANCES AND REQUIREMENTS AND ELEVATOR MANUFACTURER.

GRAPHIC SCALE
0 8 16 24
SCALE IN FEET
1/8" = 1'-0"

KEYPLAN

-N-

S102

SYM	ZONE		DATE	APPROVED
		REVISIONS		

WALTER P MOORE
WALTER P. MOORE AND ASSOCIATES, INC.
900 SOUTH ORANGE AVENUE, SUITE 1100
ORLANDO, FLORIDA 32801.3332
PHONE: 407.418.2218 FAX: 407.418.2267
CERTIFICATE OF AUTHORIZATION NO. 3616
007-11023-00
JAIME E. VASQUEZ P.E. NO. 49103
TO THE BEST OF THE ENGINEER'S KNOWLEDGE, THE PLANS AND SPECIFICATIONS COMPLY WITH THE APPLICABLE MINIMUM BUILDING CODES

SIGNATURES	DATE
DRAWN	
ANDREW MYERS	12.18.13
CHECKED	
JAIME E. VASQUEZ	12.18.13
SUBMITTED/SIGNING OF RECORD	
JAIME E. VASQUEZ	12-18-13
ST of LICENSURE: FL	
LICENSE NO: 49103	
APPROVED	
JESSE M. KEEL	12.18.13
BRUCE KINNAIRD	12/18/13

NATIONAL AERONAUTICS AND SPACE ADMINISTRATION
JOHN F. KENNEDY SPACE CENTER, NASA
KENNEDY SPACE CENTER, FLORIDA

KSC CENTRAL CAMPUS
REPLACEMENT HEADQUARTERS BUILDING
PHASE 1
VOL. 1 OF 4

FOUNDATION PLAN - AREA 2 AND 3

FILE NO.	SIZE	DWG. NO.
C-12070.00	F	79K39622 VOL 1
PCN. NO. 98745.1a		SHEET 107

KSC FORM 1-11 (3/76)(C/G 3/94)

NOTICE: When Government drawings, specifications, or other data are used for any purpose other than in connection with a definitely related Government procurement operation, the United States Government thereby incurs no responsibility nor obligation whatsoever; and the fact that the Government may have formulated, furnished, or in any way supplied the said drawings, specifications or other data is not to be regarded by implication or otherwise as in any manner licensing the holder or any other person or corporation, or conveying any rights or permission to manufacture, use, or sell any patented invention that may in any way be related thereto.

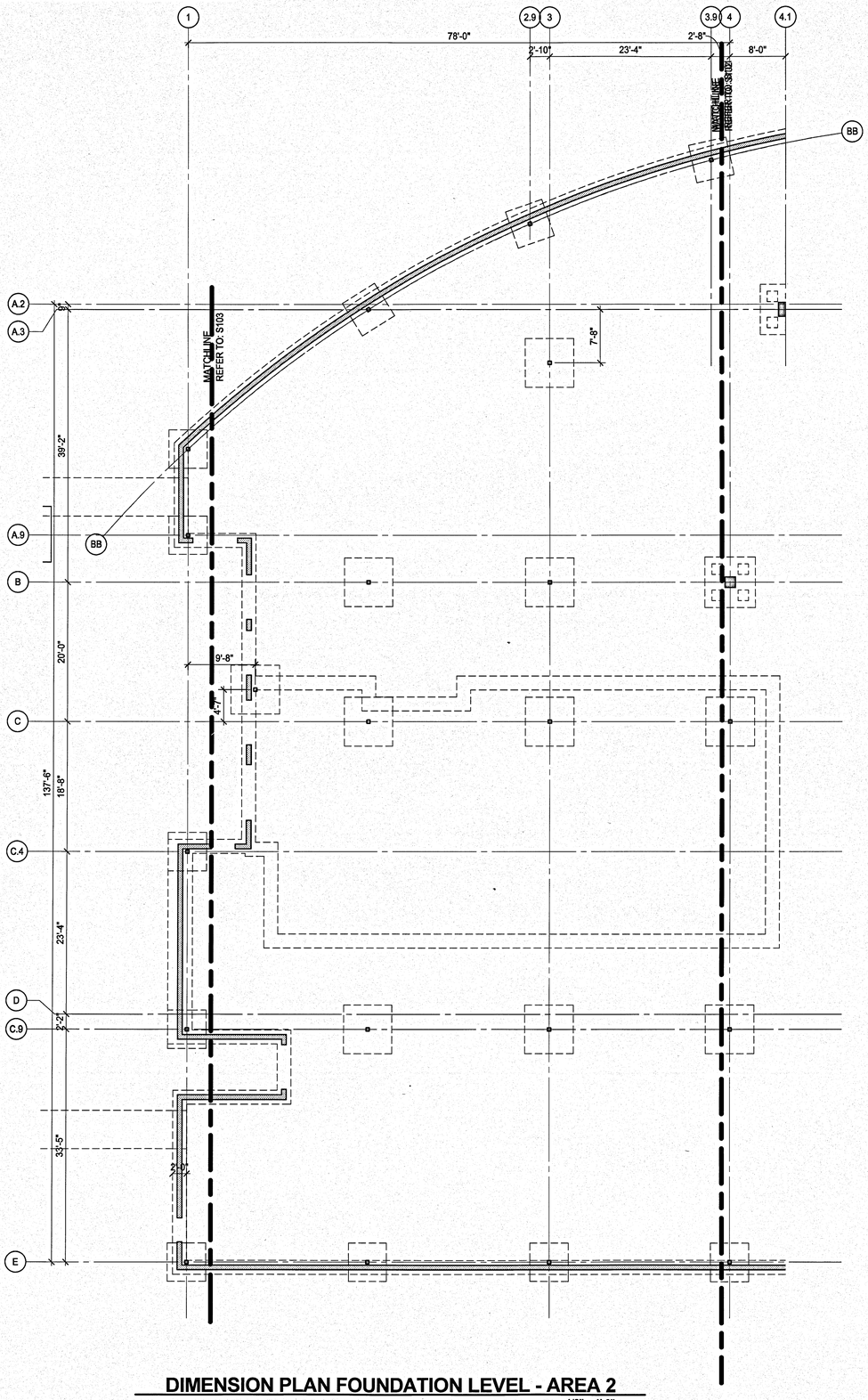

DIMENSION PLAN FOUNDATION LEVEL - AREA 2

1/8" = 1'-0"

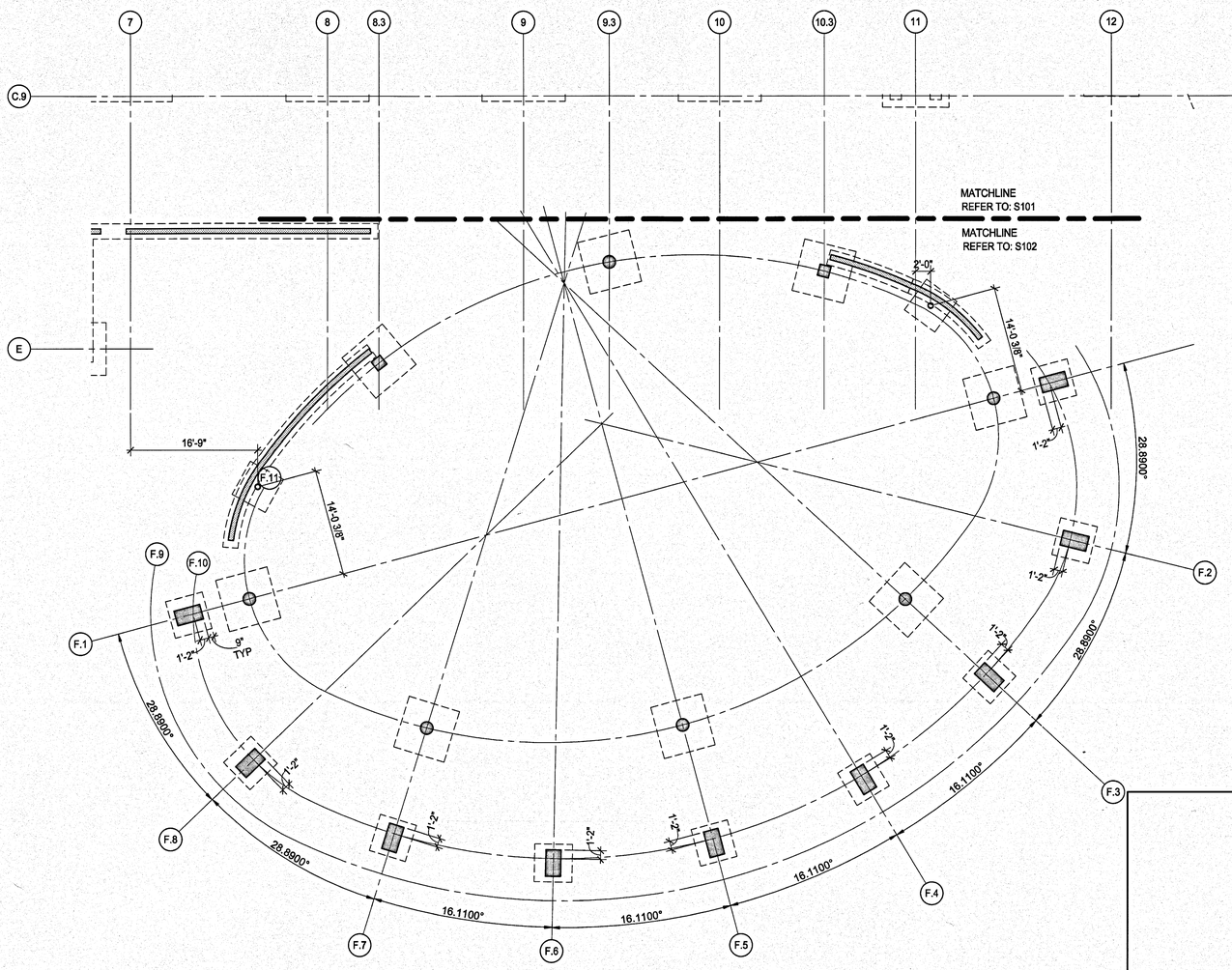

DIMENSION PLAN FOUNDATION LEVEL - AREA 3

1/8" = 1'-0"

GRAPHIC SCALE
0 8 16 24
SCALE IN FEET
1/8" = 1'-0"

KEYPLAN

S102D

SIGNATURES	DATE
DRAWN ANDREW MYERS	12.18.13
CHECKED JAIME E. VASQUEZ	12.18.13
SUBMITTED/ARCHITECT OF RECORD JAIME E. VASQUEZ	12/18/13
ST of LICENSURE: FL LICENSE NO: 49103	
APPROVED JOSEPH M. [illegible]	12/18/13
BRUCE KINNAIRD	12/18/13

SYM | ZONE | REVISIONS | DATE APPROVED

WALTER P MOORE
WALTER P. MOORE AND ASSOCIATES, INC.
800 SOUTH ORANGE AVENUE, SUITE 1100
ORLANDO, FLORIDA 32801.3532
PHONE: 407.418.2218 FAX: 407.418.2257
CERTIFICATE OF AUTHORIZATION NO. 3616
807-11023-00
JAIME E. VASQUEZ P.E. NO. 49103
TO THE BEST OF THE ENGINEER'S KNOWLEDGE, THE PLANS AND SPECIFICATIONS COMPLY WITH THE APPLICABLE MINIMUM BUILDING CODES

NATIONAL AERONAUTICS AND SPACE ADMINISTRATION
JOHN F. KENNEDY SPACE CENTER, NASA
KENNEDY SPACE CENTER, FLORIDA

KSC CENTRAL CAMPUS
REPLACEMENT HEADQUARTERS BUILDING
PHASE 1
VOL. 1 OF 4

DIMENSION PLAN - FOUNDATION PLAN - AREA 2 AND 3

FILE NO.	SIZE	DWG. NO.
C-12070.00	F	79K39622 VOL 1

PCN. NO. 98745.1a | SHEET 108

NOTICE: When Government drawings, specifications, or other data are used for any purpose other than in connection with a definitely related Government procurement operation, the United States Government thereby incurs no responsibility nor obligation whatsoever; and the fact that the Government may have formulated, furnished, or in any way supplied the said drawings, specifications or other data is not to be regarded by implication or otherwise as in any manner licensing the holder or any other person or corporation, or conveying any rights or permission to manufacture, use, or sell any patented invention that may in any way be related thereto.

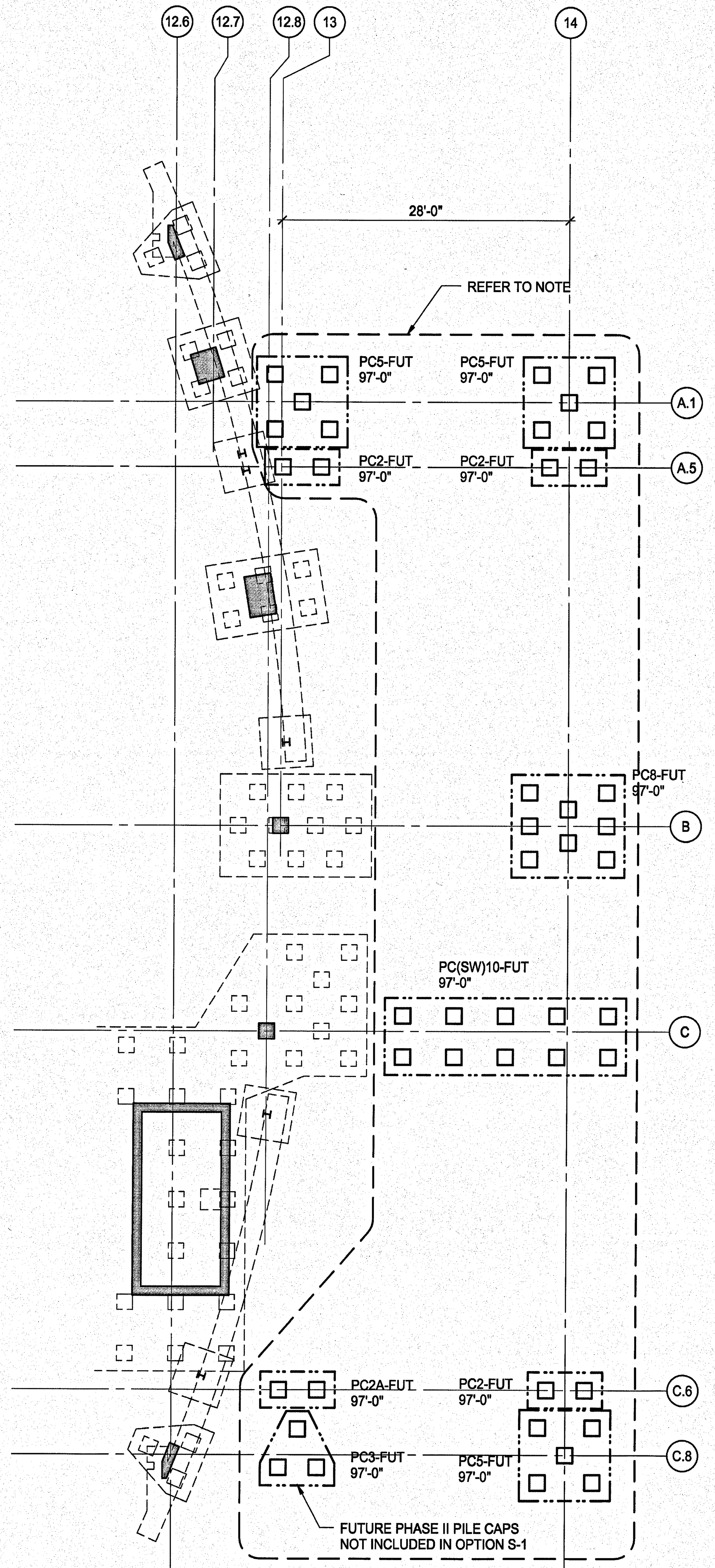

NOTE:
1. PILES FOR FUTURE EXPANSION PHASE II TO BE INCLUDED AS DESIGN OPTION S-1.

FOUNDATION PLAN - OPTION S-1
1/8" = 1'-0"

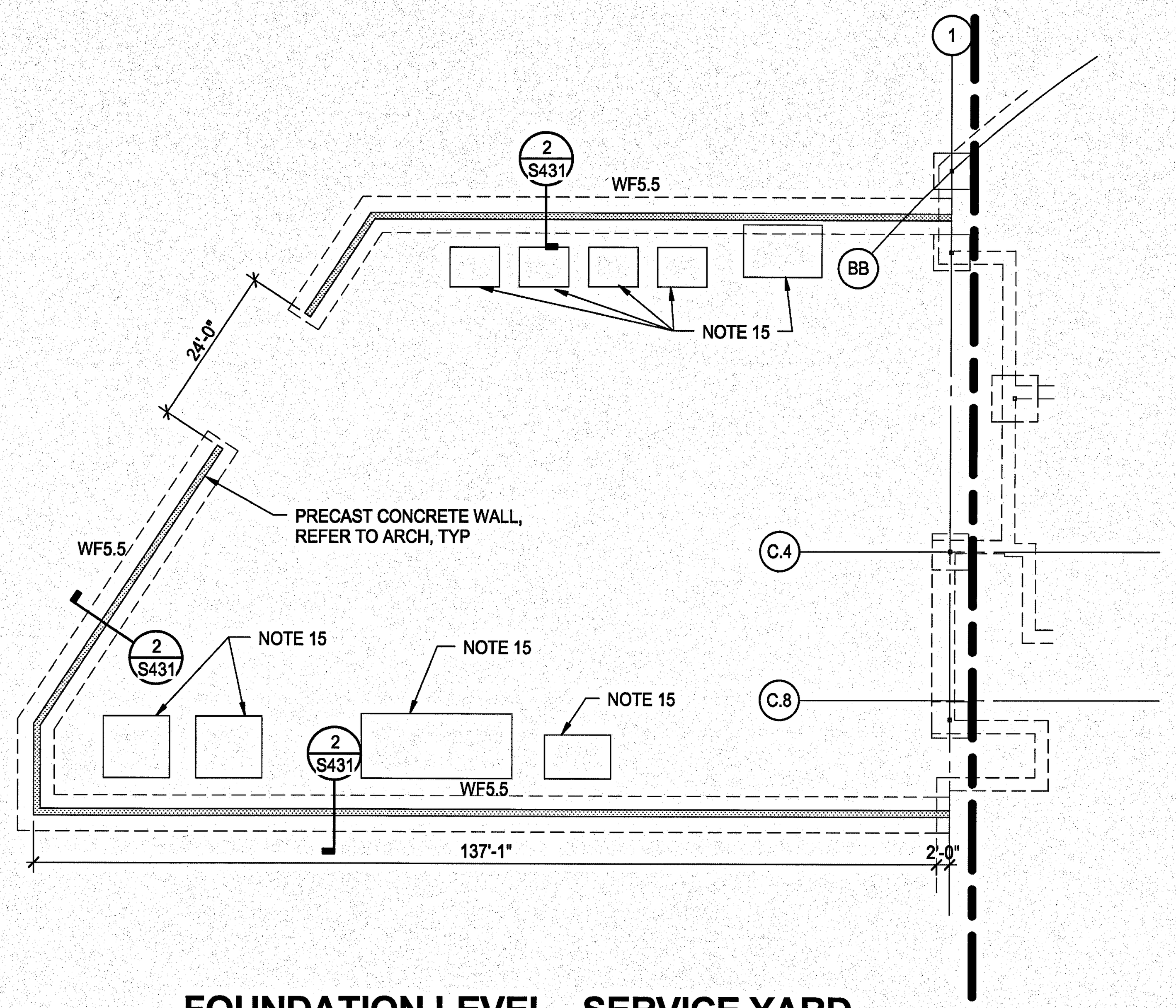

FOUNDATION LEVEL - SERVICE YARD
1/16" = 1'-0"

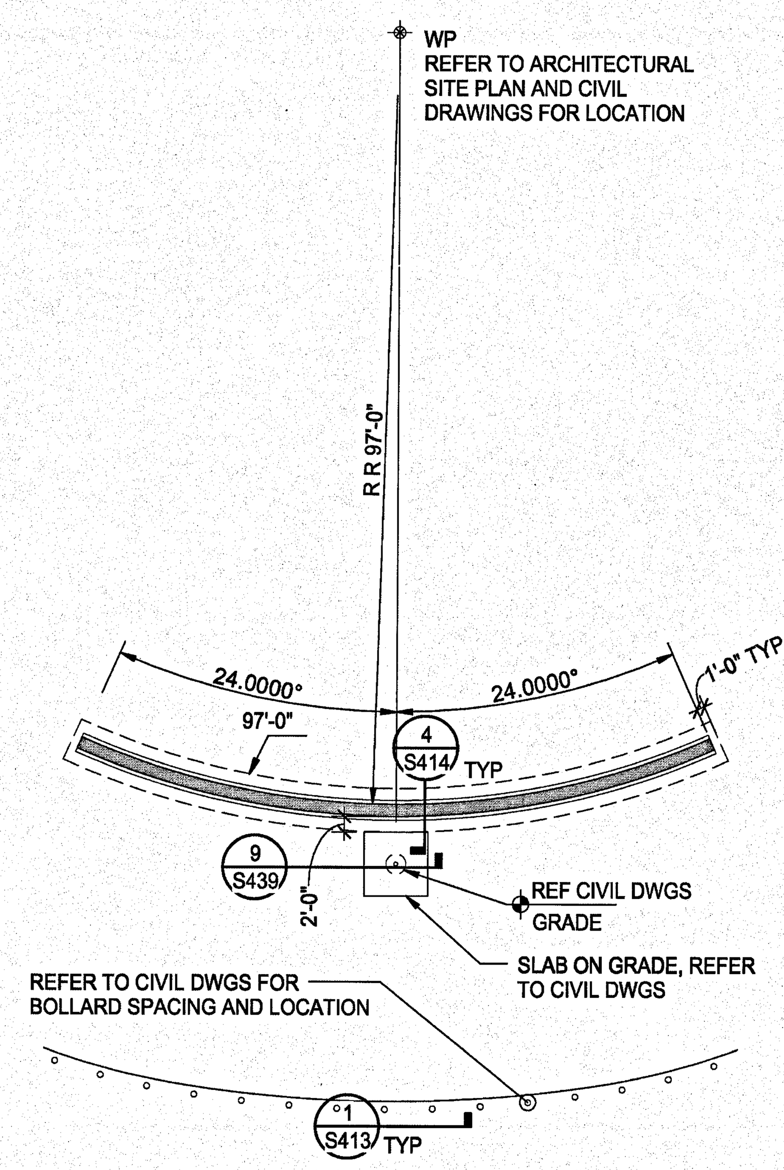

BOLLARDS AND PRECAST SIGN
1/16" = 1'-0"

GRAPHIC SCALE

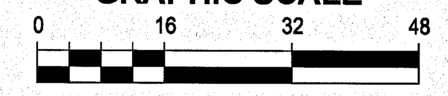

SCALE IN FEET
1/16" = 1'-0"

GRAPHIC SCALE

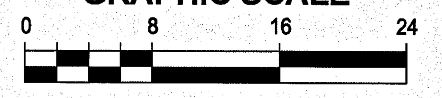

SCALE IN FEET
1/8" = 1'-0"

KEYPLAN

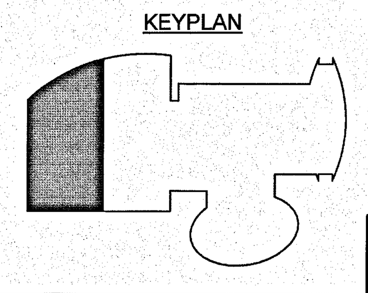

PLAN NOTES
1. CIVIL DRAWINGS ELEVATION 11.30' = DATUM ELEVATION 100'-0".
2. TOP OF FOUNDATION ELEVATION IS 98'-0", UNLESS NOTED OTHERWISE ON PLAN. SHEAR WALL FOUNDATIONS AND ELEVATOR PIT FOUNDATIONS SHALL BE AT ELEVATION = 94'-7", UNO ON PLAN.
3. FLOOR STRUCTURE IS A 5" THICK NORMALWEIGHT CONCRETE SLAB-ON-GRADE REINFORCED WITH WWR 6x6-W2.9xW2.9. MECHANICAL ROOM AND STORAGE ROOM SLAB SHALL BE 6" THICK NORMAL WEIGHT CONCRETE SLAB-ON-GRADE REINFORCED WITH WWR 6x6-W4.0xW4.0.
4. PROVIDE 2-#4x4'-0" ADDITIONAL SLAB REINFORCEMENT AT ALL RE-ENTRANT CORNERS.
5. SPREAD FOOTINGS SHALL BE CENTERED ON THE CENTROID OF SUPPORTED COLUMN, UNLESS NOTED OTHERWISE.
6. WALL FOOTINGS SHALL BE CENTERED ON THE SUPPORTED WALL, UNLESS NOTED OTHERWISE. REFER TO ARCH DRAWINGS FOR WALL EXTENTS.
7. REFER TO SHEETS S410-S413 FOR FOUNDATION AND SLAB-ON-GRADE SECTIONS AND DETAILS. REFER TO FOUNDATION PART II IN GENERAL NOTES FOR PILE REQUIREMENTS.
8. REFER TO SHEET S411 FOR FOUNDATION SCHEDULES.
9. REFER TO SHEETS S212-S213 FOR COLUMN SCHEDULES.
10. REFER TO SHEETS S202-S203 FOR SHEAR WALL ELEVATIONS. REFER TO S221 FOR SHEAR WALL PARTIAL PLANS.
11. REFER TO ARCHITECTURAL DRAWINGS FOR EXTENTS AND DIMENSIONS OF RAISED OR DEPRESSED SLAB AREAS, SLOPES, CURBS, AND DRAINS. REFER TO TYPICAL DETAILS FOR REINFORCEMENT REQUIREMENTS.
12. REFER TO MECHANICAL, ELECTRICAL, AND PLUMBING DRAWINGS FOR SLAB PENETRATIONS AND UNDERGROUND UTILITIES. COORDINATE SUMP PUMP PIT LOCATIONS AND SIZES WITH ELEVATOR MFRS AND SUMP PUMP MFRS.
13. CONTRACTOR TO FIELD VERIFY ALL EXISTING CONDITIONS AND DIMENSIONS. NOTIFY ARCHITECT AND STRUCTURAL ENGINEER OF ANY DISCREPANCIES.
14. COORDINATE LOCATION AND EXTENT OF SERVICE YARD FREE-STANDING WALL WITH CIVIL AND ARCHITECTURAL DRAWINGS.
15. HOUSEKEEPING PADS. REFER TO TYPICAL DETAIL AND COORDINATE WITH ARCHITECTURAL AND MEP.
16. REFERENCE S601 FOR CMU TYPICAL DETAILS.
17. GB1 SHALL BE 24"X18" NWC GRADEBEAM WITH TOP OF BEAM AT 99'-0". GRADE BEAM TO BE REINFORCED WITH (12)-#10 (4 EACH FACE) WITH #3 S15 STIRRUPS AT 16" SPACING.
18. MW1 SHALL BE 8" CMU REINFORCED WITH #5@48"; DOWELS TO MATCH VERTICAL REINFORCEMENT.
19. CONTRACTOR SHALL COORDINATE SIZE AND LOCATION OF ALL MEP OPENINGS (INCLUDING THOSE NOT EXPLICITLY DEFINED IN THE STRUCTURAL DRAWINGS) PRIOR TO FABRICATION OF REINFORCEMENT AND CASTING OF CONCRETE.
20. CONTRACTOR SHALL COORDINATE ALL ELEVATOR OPENINGS, PIT DEPTHS, HOIST BEAMS AND SUPPORTS, SUMP PIT DIMENSIONS, AND CLEARANCES AND REQUIREMENTS AND ELEVATOR MANUFACTURER.

SYM	ZONE		DATE	APPROVED

REVISIONS

WALTER P MOORE
WALTER P. MOORE AND ASSOCIATES, INC.
300 SOUTH ORANGE AVENUE, SUITE 1160
ORLANDO, FLORIDA 32801.3332
PHONE: 407.418.2218 FAX: 407.418.2257
CERTIFICATE OF AUTHORIZATION NO. 3818
S07-11023-00
JAIME E. VASQUEZ P.E. NO. 49103
TO THE BEST OF THE ENGINEER'S KNOWLEDGE, THE PLANS AND SPECIFICATIONS COMPLY WITH THE APPLICABLE MINIMUM BUILDING CODES

SIGNATURES	DATE
DRAWN ANDREW MYERS	12.18.13
CHECKED JAIME E. VASQUEZ	12.18.13
SUBMITTED: ARCH/ENG OF RECORD JAIME E. VASQUEZ	12-18-13
ST of LICENSURE: FL LICENSE NO: 49103	
APPROVED JOSEPH M. ALES	12-18-13
BRUCE KINNAIRD	12/18/13

NATIONAL AERONAUTICS AND SPACE ADMINISTRATION
JOHN F. KENNEDY SPACE CENTER, NASA
KENNEDY SPACE CENTER, FLORIDA

KSC CENTRAL CAMPUS REPLACEMENT HEADQUARTERS BUILDING PHASE 1 VOL. 1 OF 4

FOUNDATION PARTIAL PLANS

S103

FILE NO.	SIZE	DWG. NO.
C-12070.00	F	79K39622 VOL 1

PCN. NO. 98745.1a
SHEET 109

NOTICE: When Government drawings, specifications, or other data are used for any purpose other than in connection with a definitely related Government procurement operation, the United States Government thereby incurs no responsibility nor obligation whatsoever; and the fact that the Government may have formulated, furnished, or in any way supplied the said drawings, specifications or other data is not to be regarded by implication or otherwise as in any manner licensing the holder or any other person or corporation, or conveying any rights or permission to manufacture, use, or sell any patented invention that may in any way be related thereto.

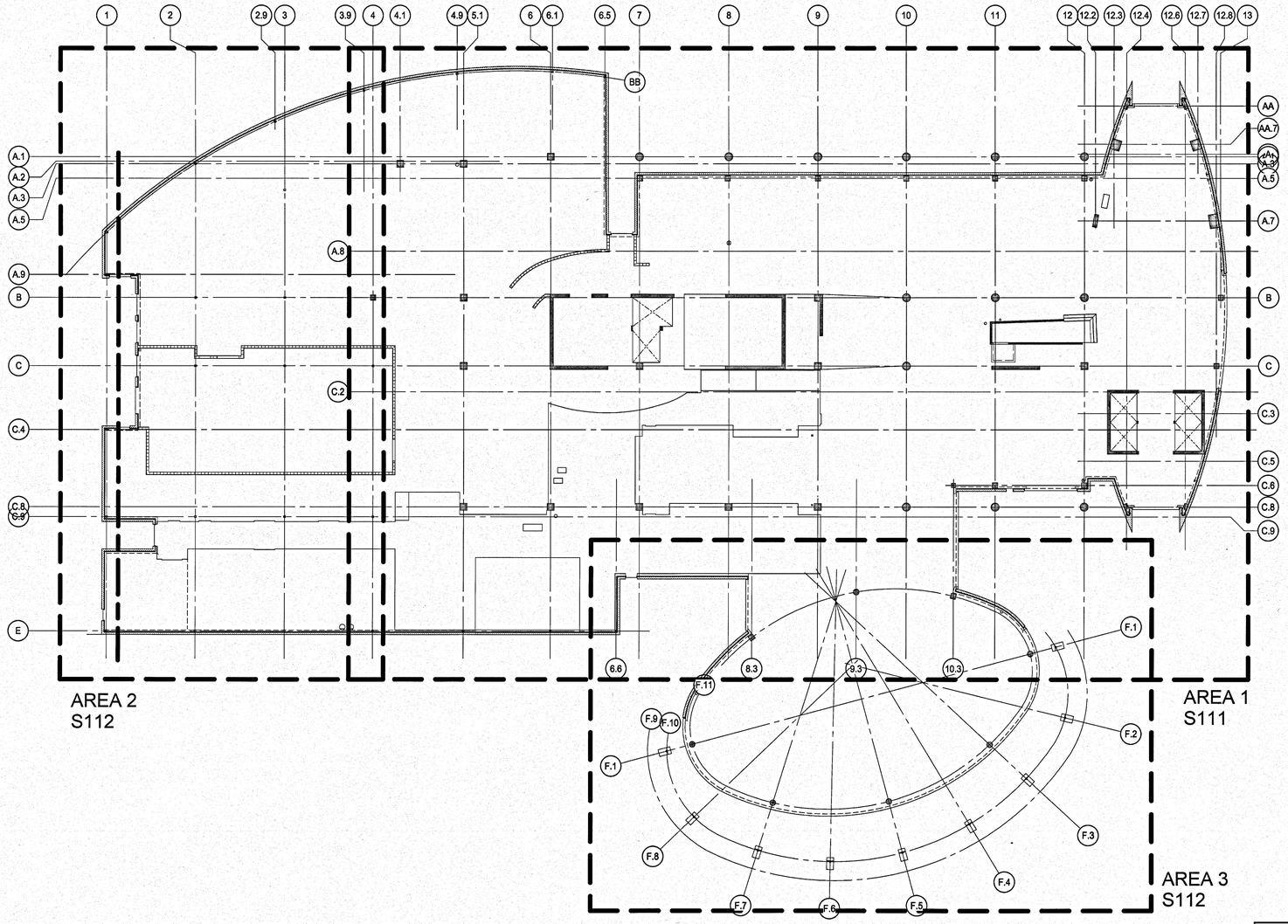

SLAB ON GRADE PLAN - OVERALL

1/16" = 1'-0"

GRAPHIC SCALE
0 16 32 48
SCALE IN FEET
1/16" = 1'-0"

-N-

S110

SYM	ZONE		DATE	APPROVED

REVISIONS

WALTER P MOORE
WALTER P. MOORE AND ASSOCIATES, INC.
300 SOUTH ORANGE AVENUE, SUITE 1100
ORLANDO, FLORIDA 32801.3332
PHONE: 407.418.2215 FAX: 407.418.2257
CERTIFICATE OF AUTHORIZATION NO. 3818
807-110203-02
JAIME E. VASQUEZ P.E. NO. 49103
TO THE BEST OF THE ENGINEER'S KNOWLEDGE, THE PLANS AND SPECIFICATIONS COMPLY WITH THE APPLICABLE MINIMUM BUILDING CODES

SIGNATURES	DATE
DRAWN ANDREW MYERS	12.18.13
CHECKED JAIME E. VASQUEZ	12.18.13
SUBMITTED, ARCHIVIST OF RECORD JAIME E. VASQUEZ	12-18-13
ST of LICENSURE: FL LICENSE NO: 49103	
APPROVED JOSEPH M. PIZZO	12-18-13
BRUCE KINNAIRD	12/18/13

NATIONAL AERONAUTICS AND SPACE ADMINISTRATION
JOHN F. KENNEDY SPACE CENTER, NASA
KENNEDY SPACE CENTER, FLORIDA

KSC CENTRAL CAMPUS
REPLACEMENT HEADQUARTERS BUILDING
PHASE 1
VOL. 1 OF 4

SLAB ON GRADE PLAN - OVERALL

FILE NO.	SIZE	DWG. NO.
C-12070.00	F	79K39622 VOL 1
PCN. NO. 98745.1a		SHEET 110

KSC FORM 1-11 (3/76)(C/G 3/94)

NOTICE: When Government drawings, specifications, or other data are used for any purpose other than in connection with a definitely related Government procurement operation, the United States Government thereby incurs no responsibility nor obligation whatsoever; and the fact that the Government may have formulated, furnished, or in any way supplied the said drawings, specifications or other data is not to be regarded by implication or otherwise as in any manner licensing the holder or any other person or corporation, or conveying any rights or permission to manufacture, use, or sell any patented invention that may in any way be related thereto.

PLAN NOTES

1. CIVIL DRAWINGS ELEVATION 11.30' = DATUM ELEVATION 100'-0".
2. TOP OF FOUNDATION ELEVATION IS 98'-0", UNLESS NOTED OTHERWISE ON PLAN. SHEAR WALL FOUNDATIONS AND ELEVATOR PIT FOUNDATIONS SHALL BE AT ELEVATION = 94'-7", UNO ON PLAN.
3. FLOOR STRUCTURE IS A 5" THICK NORMALWEIGHT CONCRETE SLAB-ON-GRADE REINFORCED WITH WWR 6x6-W2.9xW2.9. MECHANICAL ROOM AND STORAGE ROOM SLAB SHALL BE 6" THICK NORMAL WEIGHT CONCRETE SLAB-ON-GRADE REINFORCED WITH WWR 6x6-W4.0xW4.0.
4. PROVIDE 2-#4x4'-0" ADDITIONAL SLAB REINFORCEMENT AT ALL RE-ENTRANT CORNERS.
5. SPREAD FOOTINGS SHALL BE CENTERED ON THE CENTROID OF SUPPORTED COLUMN, UNLESS NOTED OTHERWISE.
6. WALL FOOTINGS SHALL BE CENTERED ON THE SUPPORTED WALL, UNLESS NOTED OTHERWISE. REFER TO ARCH DRAWINGS FOR WALL EXTENTS.
7. REFER TO SHEETS S410-S413 FOR FOUNDATION AND SLAB-ON-GRADE SECTIONS AND DETAILS. REFER TO FOUNDATION PART II IN GENERAL NOTES FOR PILE REQUIREMENTS.
8. REFER TO SHEET S411 FOR FOUNDATION SCHEDULES.
9. REFER TO SHEETS S212-S213 FOR COLUMN SCHEDULES.
10. REFER TO SHEETS S202-S203 FOR SHEAR WALL ELEVATIONS. REFER TO S221 FOR SHEAR WALL PARTIAL PLANS.
11. REFER TO ARCHITECTURAL DRAWINGS FOR EXTENTS AND DIMENSIONS OF RAISED OR DEPRESSED SLAB AREAS, SLOPES, CURBS, AND DRAINS. REFER TO TYPICAL DETAILS FOR REINFORCEMENT REQUIREMENTS.
12. REFER TO MECHANICAL, ELECTRICAL, AND PLUMBING DRAWINGS FOR SLAB PENETRATIONS AND UNDERGROUND UTILITIES. COORDINATE SUMP PUMP PIT LOCATIONS AND SIZES WITH ELEVATOR MFRS AND SUMP PUMP MFRS.
13. CONTRACTOR TO FIELD VERIFY ALL EXISTING CONDITIONS AND DIMENSIONS. NOTIFY ARCHITECT AND STRUCTURAL ENGINEER OF ANY DISCREPANCIES.
14. COORDINATE LOCATION AND EXTENT OF SERVICE YARD FREE-STANDING WALL WITH CIVIL AND ARCHITECTURAL DRAWINGS.
15. HOUSEKEEPING PADS. REFER TO TYPICAL DETAIL AND COORDINATE WITH ARCHITECTURAL AND MEP.
16. REFERENCE S601 FOR CMU TYPICAL DETAILS.
17. GB1 SHALL BE 24"X18" NWC GRADEBEAM WITH TOP OF BEAM AT 99'-0". GRADE BEAM TO BE REINFORCED WITH (12)-#10 (4 EACH FACE) WITH #3 S15 STIRRUPS AT 16" SPACING.
18. MW1 SHALL BE 8" CMU REINFORCED WITH #5@48"; DOWELS TO MATCH VERTICAL REINFORCEMENT.
19. CONTRACTOR SHALL COORDINATE SIZE AND LOCATION OF ALL MEP OPENINGS (INCLUDING THOSE NOT EXPLICITLY DEFINED IN THE STRUCTURAL DRAWINGS) PRIOR TO FABRICATION OF REINFORCEMENT AND CASTING OF CONCRETE.
20. CONTRACTOR SHALL COORDINATE ALL ELEVATOR OPENINGS, PIT DEPTHS, HOIST BEAMS AND SUPPORTS, SUMP PIT DIMENSIONS, AND CLEARANCES AND REQUIREMENTS AND ELEVATOR MANUFACTURER.

CONTRACTOR TO COORDINATE BRICK LOADING & SUPPORT REQUIREMENTS FOR SALVAGED BRICK WITH COLD-FORMED FRAMING ENGINEER. REFER TO ARCH DWGS FOR EXTENTS, TYP.

4'-0"x1'-9" PAD FOR KENNEDY BUST

REF NOTE 15. CONTRACTOR TO COORD SECURING OF EXISTING JFK BUST AND PEDESTAL TO HOUSEKEEPING PAD. REFER ARCH DWGS

MATCHLINE REFER TO: S112

MATCHLINE REFER TO: S112

SLAB ON GRADE PLAN - AREA 1

1/8" = 1'-0"

KEYPLAN

GRAPHIC SCALE

0 8 16 24

SCALE IN FEET
1/8" = 1'-0"

SIGNATURES	DATE
DRAWN ANDREW MYERS	12.18.13
CHECKED JAIME E. VASQUEZ	12.18.13
SUBMITTED (ARCHENG) OF RECORD JAIME E. VASQUEZ	12-18-13
ST of LICENSURE: FL LICENSE NO: 49103	
APPROVED JOSEPH M. MOES	12-18-13
BRUCE KINNAIRD	12/19/13

S111

REVISIONS

SYM | ZONE | DATE APPROVED

WALTER P MOORE
WALTER P. MOORE AND ASSOCIATES, INC.
300 SOUTH ORANGE AVENUE, SUITE 1100
ORLANDO, FLORIDA 32801.3382
PHONE: 407.418.2219 FAX: 407.418.2267
CERTIFICATE OF AUTHORIZATION NO. 3616
SEV-110026-00
JAIME E. VASQUEZ P.E. NO. 49103
TO THE BEST OF THE ENGINEER'S KNOWLEDGE, THE PLANS AND SPECIFICATIONS COMPLY WITH THE APPLICABLE MINIMUM BUILDING CODES

NATIONAL AERONAUTICS AND SPACE ADMINISTRATION
JOHN F. KENNEDY SPACE CENTER, NASA
KENNEDY SPACE CENTER, FLORIDA

KSC CENTRAL CAMPUS
REPLACEMENT HEADQUARTERS BUILDING
PHASE 1
VOL. 1 OF 4

SLAB ON GRADE PLAN - AREA 1

FILE NO.	SIZE	DWG. NO.
C-12070.00	F	79K39622 VOL 1

PCN. NO. 98745.1a | SHEET 111

NOTICE: When Government drawings, specifications, or other data are used for any purpose other than in connection with a definitely related Government procurement operation, the United States Government thereby incurs no responsibility nor obligation whatsoever; and the fact that the Government may have formulated, furnished, or in any way supplied the said drawings, specifications or other data is not to be regarded by implication or otherwise as in any manner licensing the holder or any other person or corporation, or conveying any rights or permission to manufacture, use, or sell any patented invention that may in any way be related thereto.

SLAB ON GRADE PLAN - AREA 1

1/8" = 1'-0"

GRAPHIC SCALE

0 8 16 24

SCALE IN FEET

1/8" = 1'-0"

KEYPLAN

S111D

KSC FORM 1-11 (3/78)(C/G 3/94)

SYM	ZONE	REVISIONS	DATE APPROVED

WALTER P MOORE
WALTER P. MOORE AND ASSOCIATES, INC.
500 SOUTH ORANGE AVENUE, SUITE 1100
ORLANDO, FLORIDA 32801.3883
PHONE: 407.418.2218 FAX: 407.418.2257
CERTIFICATE OF AUTHORIZATION NO. 3815
807-1100-00
JAIME E. VASQUEZ P.E. NO. 49103
TO THE BEST OF THE ENGINEERS KNOWLEDGE, THE PLANS AND SPECIFICATIONS COMPLY WITH THE APPLICABLE MINIMUM BUILDING CODES

SIGNATURES	DATE
DRAWN ANDREW MYERS	12.18.13
CHECKED JAIME E. VASQUEZ	12.18.13
SUBMITTED, ARCHENG OF RECORD JAIME E. VASQUEZ	12.18.13
ST of LICENSURE: FL	
LICENSE NO: 49103	
APPROVED JOSEPH M. MEES	12.18.13
BRUCE KINNAIRD	12/19/13

NATIONAL AERONAUTICS AND SPACE ADMINISTRATION
JOHN F. KENNEDY SPACE CENTER, NASA
KENNEDY SPACE CENTER, FLORIDA

KSC CENTRAL CAMPUS
REPLACEMENT HEADQUARTERS BUILDING
PHASE 1
VOL. 1 OF 4

DIMENSION PLAN - SLAB ON GRADE AREA 1

FILE NO.	SIZE	DWG. NO.
C-12070.00	F	79K39622 VOL 1

PCN. NO. 98745.1a SHEET 112

NOTICE: When Government drawings, specifications, or other data are used for any purpose other than in connection with a definitely related Government procurement operation, the United States Government thereby incurs no responsibility nor obligation whatsoever; and the fact that the Government may have formulated, furnished, or in any way supplied the said drawings, specifications or other data is not to be regarded by implication or otherwise as in any manner licensing the holder or any other person or corporation, or conveying any rights or permission to manufacture, use, or sell any patented invention that may in any way be related thereto.

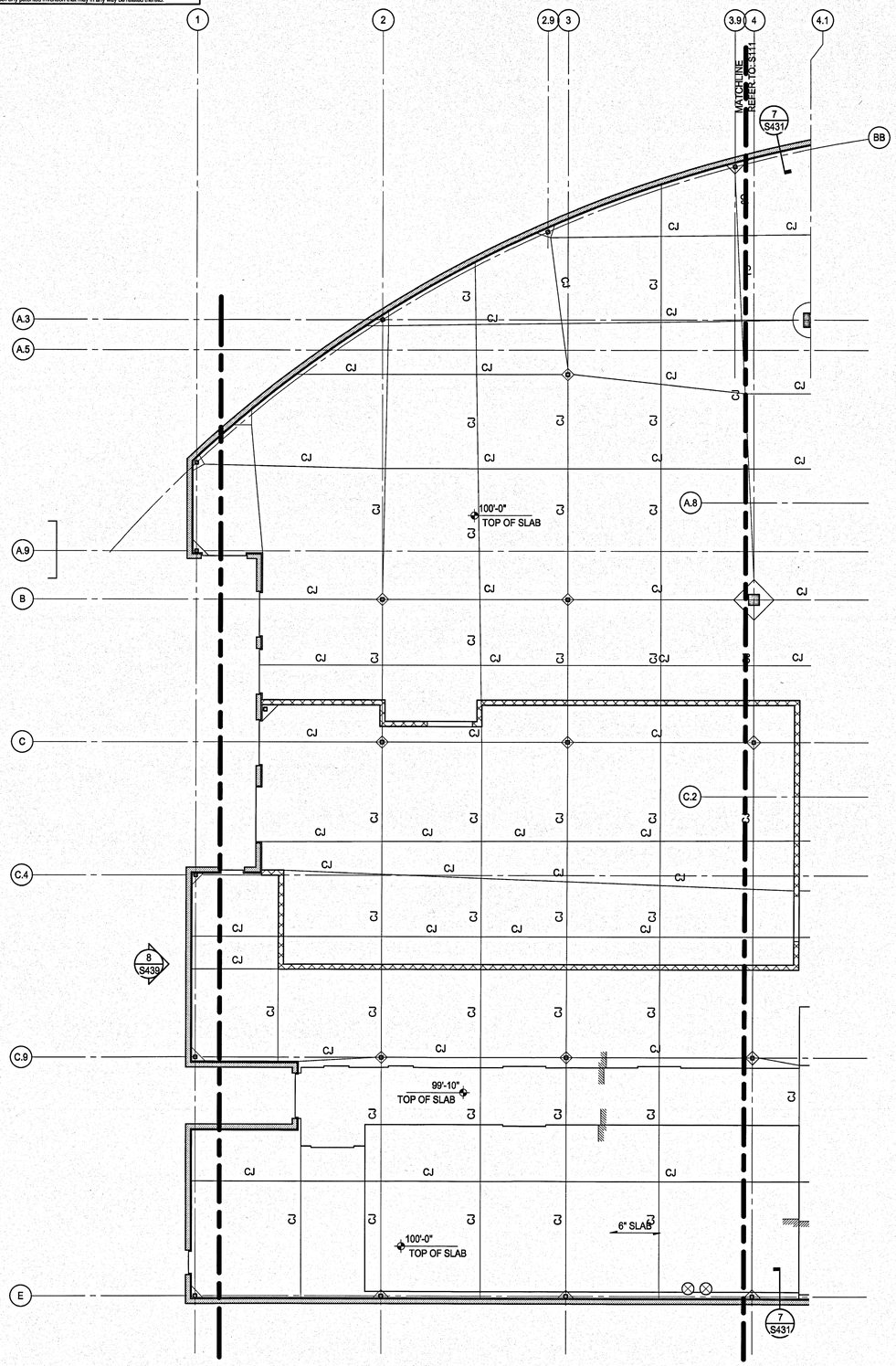

SLAB ON GRADE PLAN - AREA 2

1/8" = 1'-0"

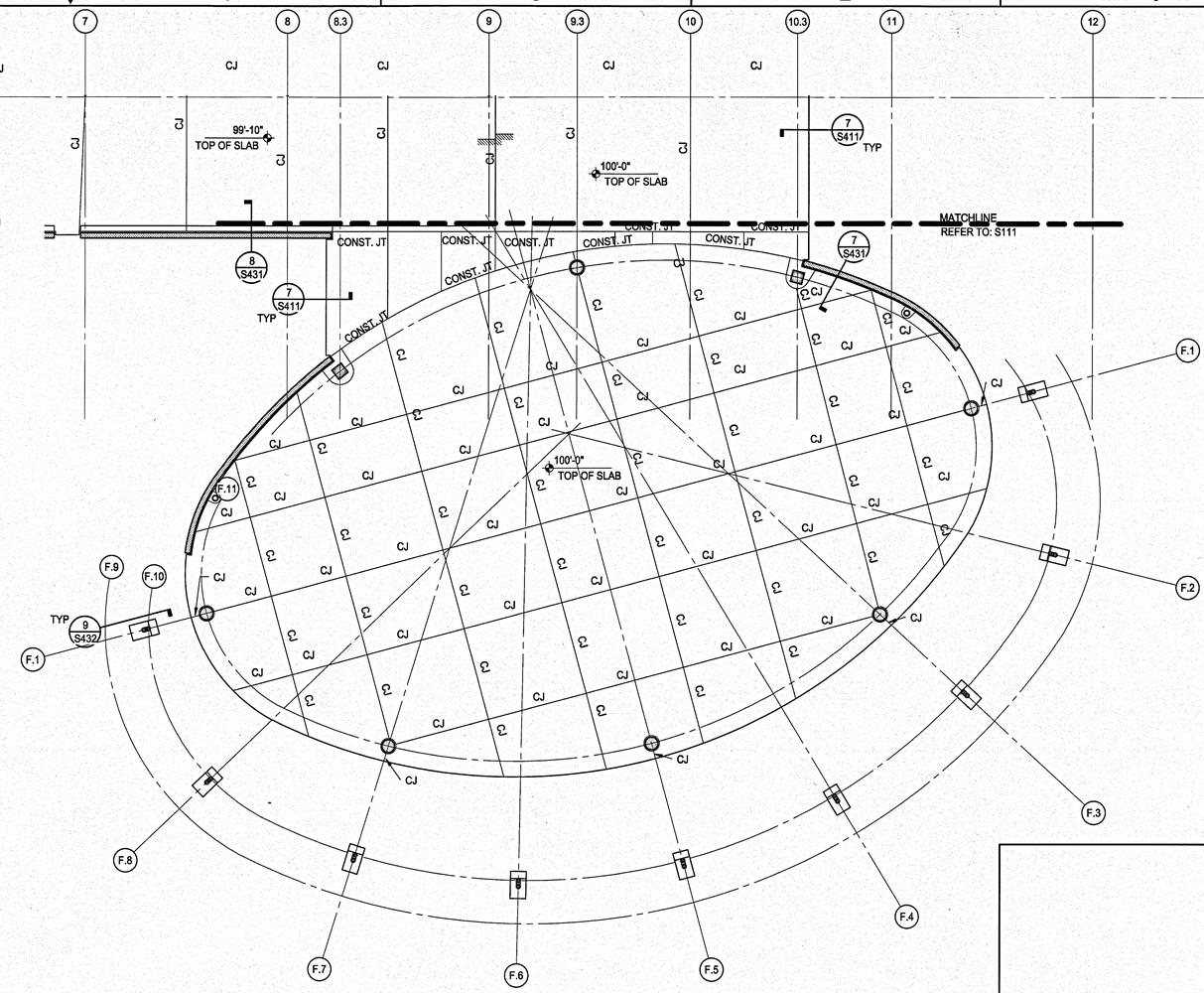

SLAB ON GRADE PLAN - AREA 3

1/8" = 1'-0"

PLAN NOTES

1. CIVIL DRAWINGS ELEVATION 11.30' = DATUM ELEVATION 100'-0".
2. TOP OF FOUNDATION ELEVATION IS 98'-0", UNLESS NOTED OTHERWISE ON PLAN. SHEAR WALL FOUNDATIONS AND ELEVATOR PIT FOUNDATIONS SHALL BE AT ELEVATION = 94'-7", UNO ON PLAN.
3. FLOOR STRUCTURE IS A 5" THICK NORMALWEIGHT CONCRETE SLAB-ON-GRADE REINFORCED WITH WWR 6x6-W2.9xW2.9. MECHANICAL ROOM AND STORAGE ROOM SLAB SHALL BE 6" THICK NORMAL WEIGHT CONCRETE SLAB-ON-GRADE REINFORCED WITH WWR 6x6-W4.0xW4.0.
4. PROVIDE 2-#4x4'-0" ADDITIONAL SLAB REINFORCEMENT AT ALL RE-ENTRANT CORNERS.
5. SPREAD FOOTINGS SHALL BE CENTERED ON THE CENTROID OF SUPPORTED COLUMN, UNLESS NOTED OTHERWISE.
6. WALL FOOTINGS SHALL BE CENTERED ON THE SUPPORTED WALL, UNLESS NOTED OTHERWISE. REFER TO ARCH DRAWINGS FOR WALL EXTENTS.
7. REFER TO SHEETS S410-S413 FOR FOUNDATION AND SLAB-ON-GRADE SECTIONS AND DETAILS. REFER TO FOUNDATION PART II IN GENERAL NOTES FOR PILE REQUIREMENTS.
8. REFER TO SHEET S411 FOR FOUNDATION SCHEDULES.
9. REFER TO SHEETS S212-S213 FOR COLUMN SCHEDULES.
10. REFER TO SHEETS S202-S203 FOR SHEAR WALL ELEVATIONS. REFER TO S221 FOR SHEAR WALL PARTIAL PLANS.
11. REFER TO ARCHITECTURAL DRAWINGS FOR EXTENTS AND DIMENSIONS OF RAISED OR DEPRESSED SLAB AREAS, SLOPES, CURBS, AND DRAINS. REFER TO TYPICAL DETAILS FOR REINFORCEMENT REQUIREMENTS.
12. REFER TO MECHANICAL, ELECTRICAL, AND PLUMBING DRAWINGS FOR SLAB PENETRATIONS AND UNDERGROUND UTILITIES. COORDINATE SUMP PUMP PIT LOCATIONS AND SIZES WITH ELEVATOR MFRS AND SUMP PUMP MFRS.
13. CONTRACTOR TO FIELD VERIFY ALL EXISTING CONDITIONS AND DIMENSIONS. NOTIFY ARCHITECT AND STRUCTURAL ENGINEER OF ANY DISCREPANCIES.
14. COORDINATE LOCATION AND EXTENT OF SERVICE YARD FREE-STANDING WALL WITH CIVIL AND ARCHITECTURAL DRAWINGS.
15. HOUSEKEEPING PADS. REFER TO TYPICAL DETAIL AND COORDINATE WITH ARCHITECTURAL AND MEP.
16. REFERENCE S601 FOR CMU TYPICAL DETAILS.
17. GB1 SHALL BE 18"X18" NWC GRADEBEAM WITH TOP OF BEAM AT 99'-0". GRADE BEAM TO BE REINFORCED WITH (8)-#8 (3 EACH FACE) WITH #3 S15 STIRRUPS AT 16" SPACING.
18. MW1 SHALL BE 8" CMU REINFORCED WITH #5@48"; DOWELS TO MATCH VERTICAL REINFORCEMENT.
19. CONTRACTOR SHALL COORDINATE SIZE AND LOCATION OF ALL MEP OPENINGS (INCLUDING THOSE NOT EXPLICITLY DEFINED IN THE STRUCTURAL DRAWINGS) PRIOR TO FABRICATION OF REINFORCEMENT AND CASTING OF CONCRETE.
20. CONTRACTOR SHALL COORDINATE ALL ELEVATOR OPENINGS, PIT DEPTHS, HOIST BEAMS AND SUPPORTS, SUMP PIT DIMENSIONS, AND CLEARANCES AND REQUIREMENTS AND ELEVATOR MANUFACTURER.

GRAPHIC SCALE
0 8 16 24
SCALE IN FEET
1/8" = 1'-0"

KEYPLAN

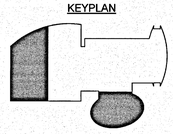

-N-

S112

REVISIONS			
SYM	ZONE		DATE APPROVED

WALTER P MOORE
WALTER P. MOORE AND ASSOCIATES, INC.
500 SOUTH ORANGE AVENUE, SUITE 1100
ORLANDO, FLORIDA 32801.5332
PHONE: 407.418.2218 FAX: 407.418.2267
CERTIFICATE OF AUTHORIZATION NO. 35116
007-11022-00
JAIME E. VASQUEZ P.E. NO. 49103
TO THE BEST OF THE ENGINEER'S KNOWLEDGE, THE PLANS AND SPECIFICATIONS COMPLY WITH THE APPLICABLE MINIMUM BUILDING CODES

SIGNATURES	DATE
DRAWN ANDREW MYERS	12.18.13
CHECKED JAIME E. VASQUEZ	12.18.13
SUBMITTED - ARCHIVING OF RECORD JAIME E. VASQUEZ	12.18.13
ST of LICENSURE: FL LICENSE NO. 49103	
APPROVED JOSEPH M. FLOYD	12.18.13
BRUCE KINNAIRD	12/19/13

NATIONAL AERONAUTICS AND SPACE ADMINISTRATION
JOHN F. KENNEDY SPACE CENTER, NASA
KENNEDY SPACE CENTER, FLORIDA

KSC CENTRAL CAMPUS
REPLACEMENT HEADQUARTERS BUILDING
PHASE 1
VOL. 1 OF 4

SLAB ON GRADE PLAN - AREA 2 AND 3

FILE NO.	SIZE	DWG. NO.
C-12070.00	F	79K39622 VOL 1
PCN. NO. 98745.1a		SHEET 113

NOTICE: When Government drawings, specifications, or other data are used for any purpose other than in connection with a definitely related Government procurement operation, the United States Government thereby incurs no responsibility nor obligation whatsoever; and the fact that the Government may have formulated, furnished, or in any way supplied the said drawings, specifications or other data is not to be regarded by implication or otherwise as in any manner licensing the holder or any other person or corporation, or conveying any rights or permission to manufacture, use, or sell any patented invention that may in any way be related thereto.

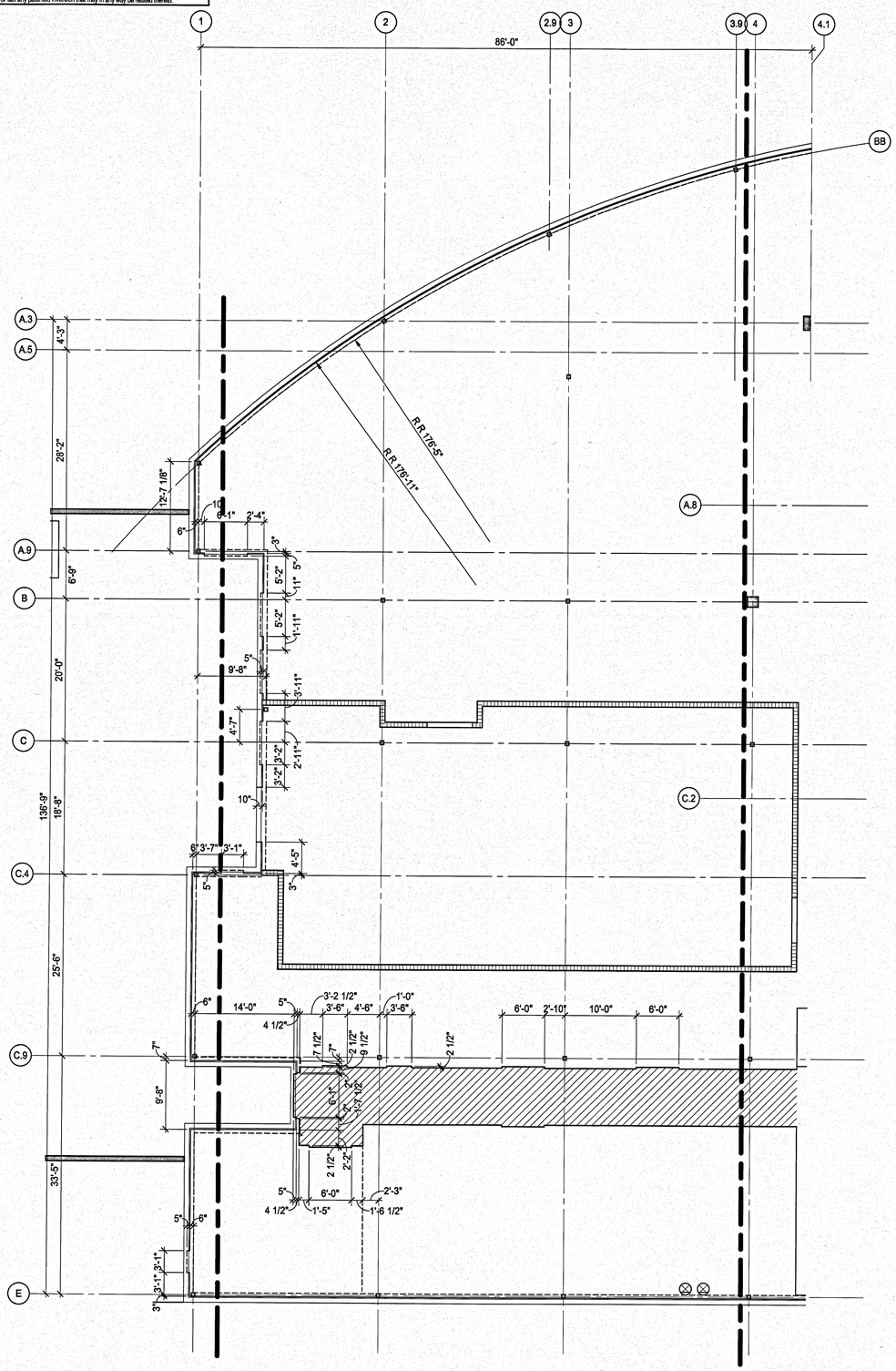

SLAB ON GRADE PLAN - AREA 2

1/8" = 1'-0"

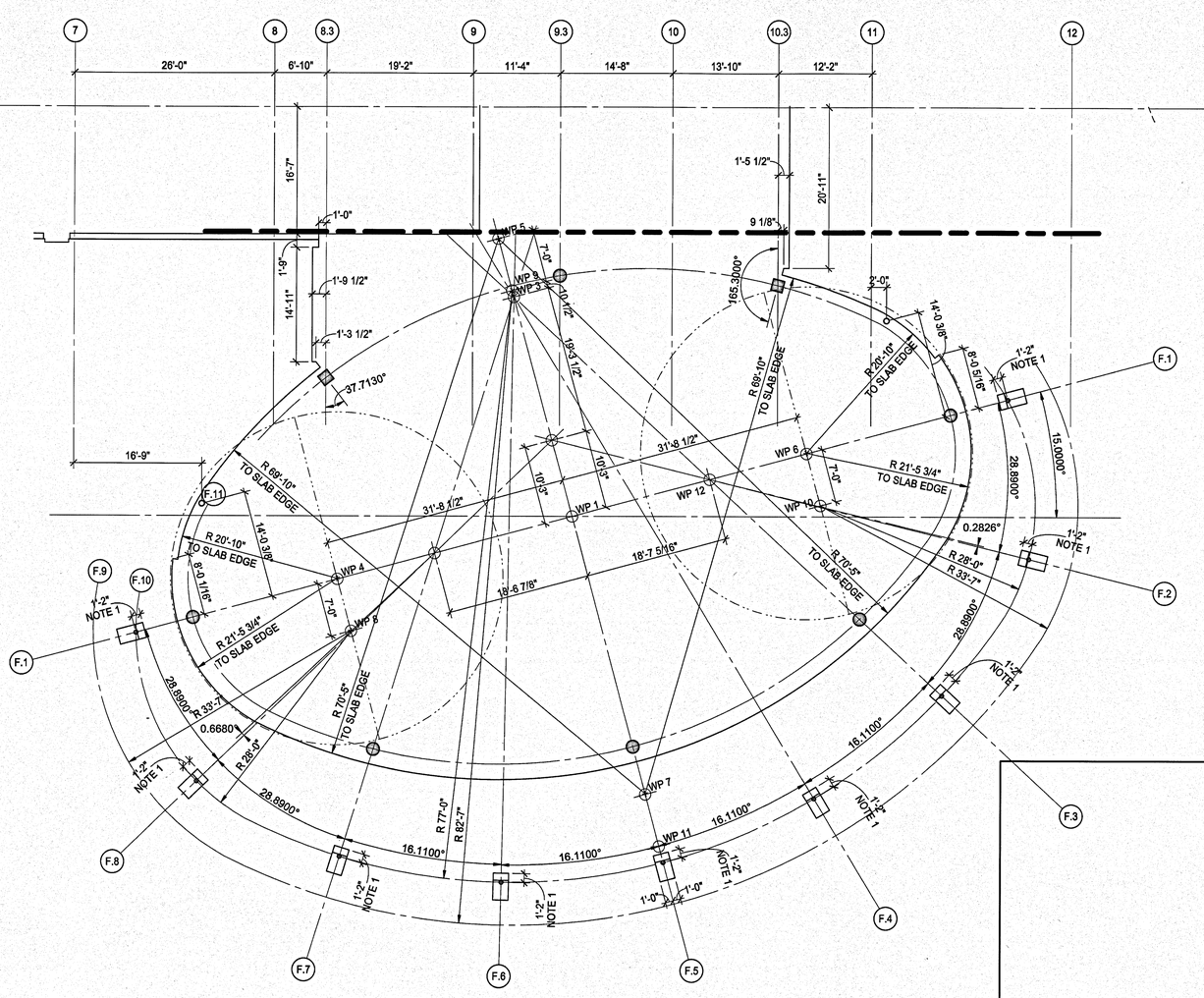

SLAB ON GRADE PLAN - AREA 3

1/8" = 1'-0"

NOTES:
1. CENTERLINE OF COLUMN AT ELEVATION 100'-0" IS LOCATED AT GRID INTERSECTION. DIMENSION NOTED ON PLAN LOCATES BACK OF CONCRETE PEDESTAL FROM GRID INTERSECTION

GRAPHIC SCALE
0 8 16 24
SCALE IN FEET
1/8" = 1'-0"

KEYPLAN

-N-

S112D

SYM	ZONE		DATE APPROVED

REVISIONS

WALTER P MOORE
WALTER P. MOORE AND ASSOCIATES, INC.
300 SOUTH ORANGE AVENUE, SUITE 1100
ORLANDO, FLORIDA 32801-8332
PHONE: 407.418.2218 FAX: 407.418.2257
CERTIFICATE OF AUTHORIZATION NO. 3818
007-11003-00
JAIME E. VASQUEZ P.E. NO. 49103
TO THE BEST OF THE ENGINEER'S KNOWLEDGE, THIS PLANS AND SPECIFICATIONS COMPLY WITH THE APPLICABLE MINIMUM BUILDING CODES

SIGNATURES	DATE
DRAWN ANDREW MYERS	12.18.13
CHECKED JAIME E. VASQUEZ	12.18.13
SUBMITTED/ACCEPTED OF RECORD JAIME E. VASQUEZ	12.18.13
ST of LICENSURE: FL LICENSE NO: 49103	
APPROVED JOSEPH M. ALES	12/18/13
BRUCE KINNAIRD	12/18/13

NATIONAL AERONAUTICS AND SPACE ADMINISTRATION
JOHN F. KENNEDY SPACE CENTER, NASA
KENNEDY SPACE CENTER, FLORIDA

KSC CENTRAL CAMPUS
REPLACEMENT HEADQUARTERS BUILDING
PHASE 1
VOL. 1 OF 4

DIMENSION PLAN - SLAB ON GRADE PLAN - AREA 2 AND 3

FILE NO.	SIZE	DWG. NO.
C-12070.00	F	79K39622 VOL 1
PCN. NO. 98745.1a		SHEET 114

KSC FORM 1-11 (3/76)(C/G 3/94)

NOTICE: When Government drawings, specifications, or other data are used for any purpose other than in connection with a definitely related Government procurement operation, the United States Government thereby incurs no responsibility nor obligation whatsoever; and the fact that the Government may have formulated, furnished, or in any way supplied the said drawings, specifications or other data is not to be regarded by implication or otherwise as in any manner licensing the holder or any other person or corporation, or conveying any rights or permission to manufacture, use, or sell any patented invention that may in any way be related thereto.

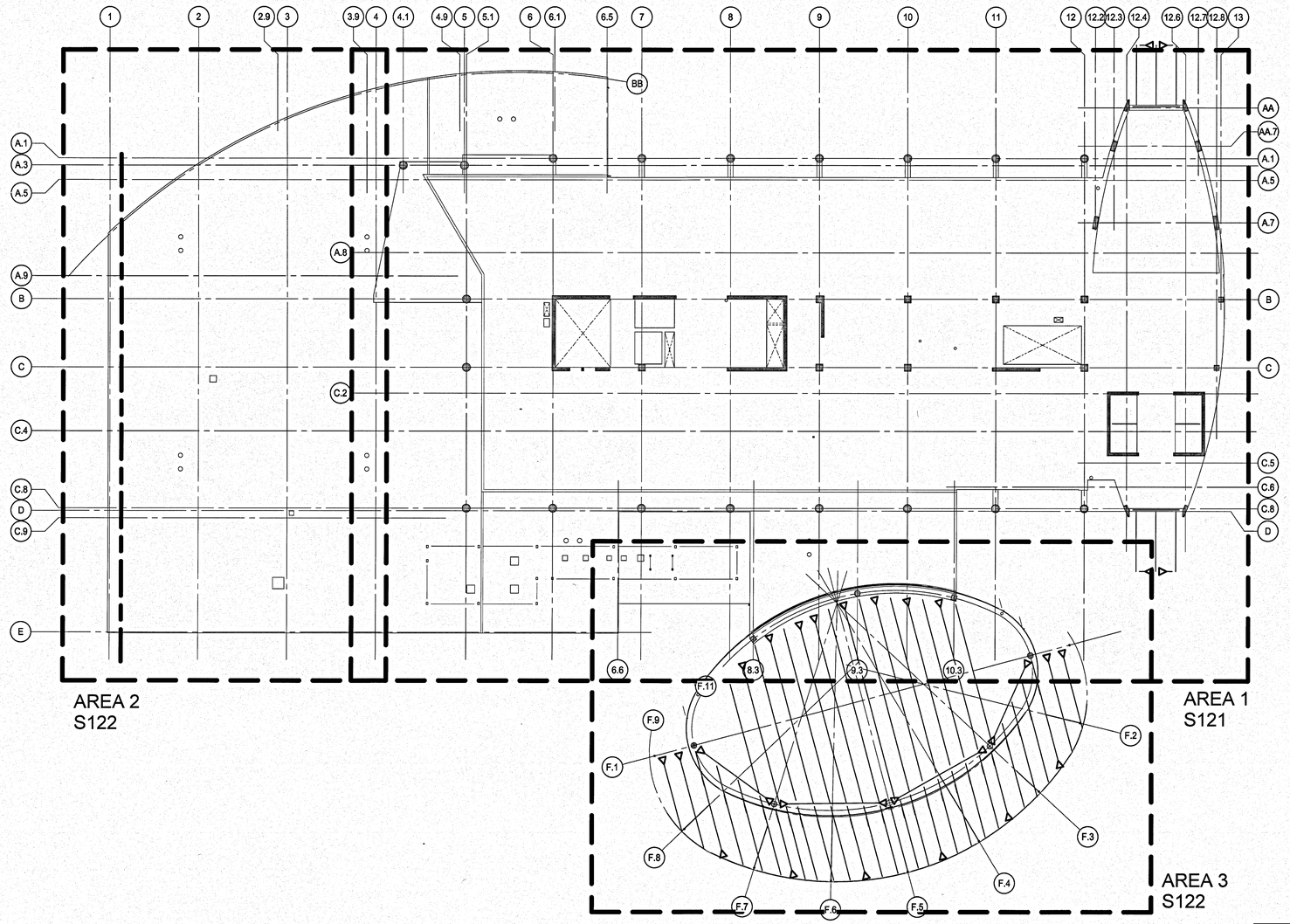

FLOOR FRAMING PLAN - 2ND LEVEL - OVERALL

1/16" = 1'-0"

GRAPHIC SCALE
0 16 32 48
SCALE IN FEET
1/16" = 1'-0"

-N-

S120

SYM	ZONE		DATE	APPROVED

REVISIONS

WALTER P MOORE
WALTER P. MOORE AND ASSOCIATES, INC.
300 SOUTH ORANGE AVENUE, SUITE 1100
ORLANDO, FLORIDA 32801.3332
PHONE: 407.418.2218 FAX: 407.418.2257
CERTIFICATE OF AUTHORIZATION NO. 3818
807-110203-00
JAIME E. VASQUEZ P.E. NO. 49103
TO THE BEST OF THE ENGINEER'S KNOWLEDGE, THE PLANS AND SPECIFICATIONS COMPLY WITH THE APPLICABLE MINIMUM BUILDING CODES

SIGNATURES	DATE
DRAWN ANDREW MYERS	12.18.13
CHECKED JAIME E. VASQUEZ	12.18.13
SUBMITTING ARCHITECT OF RECORD JAIME E. VASQUEZ	12.18.13
ST of LICENSURE: FL LICENSE NO: 49103	
APPROVED JOSEPH M. PALEN	12.18.13
BRUCE KINNAIRD	12/18/13

NATIONAL AERONAUTICS AND SPACE ADMINISTRATION
JOHN F. KENNEDY SPACE CENTER, NASA
KENNEDY SPACE CENTER, FLORIDA

KSC CENTRAL CAMPUS
REPLACEMENT HEADQUARTERS BUILDING
PHASE 1
VOL. 1 OF 4

FLOOR FRAMING PLAN - 2ND LEVEL OVERALL

FILE NO.	SIZE	DWG. NO.
C-12070.00	F	79K39622 VOL 1
PCN. NO. 98745.1a		SHEET 115

KSC FORM 1-11 (3/75)(C/G 3/94)

NOTICE: When Government drawings, specifications, or other data are used for any purpose other than in connection with a definitely related Government procurement operation, the United States Government thereby incurs no responsibility nor obligation whatsoever; and the fact that the Government may have formulated, furnished, or in any way supplied the said drawings, specifications or other data is not to be regarded by implication or otherwise as in any manner licensing the holder or any other person or corporation, or conveying any rights or permission to manufacture, use, or sell any patented invention that may in any way be related thereto.

FLOOR FRAMING PLAN - 2ND LEVEL - AREA 1

1/8" = 1'-0"

PLAN NOTES

1. CIVIL DRAWINGS ELEVATION 11.30' = DATUM ELEVATION 100'-0".
2. TYPICAL SLAB CONSTRUCTION SHALL BE NORMAL WEIGHT CONCRETE 5" THICK WITH #4@ 12" EACH WAY, CENTERED IN THE SLAB THICKNESS, UNO.
3. PROVIDE (2) #4x4'-0" ADDITIONAL SLAB REINF AT ALL RE-ENTRANT CORNERS.
4. REFER TO SHEET S215 FOR COLUMN SCHEDULES.
5. REFER TO SHEETS S202-S203 FOR SHEAR WALL ELEVATIONS.
6. REFER TO ARCHITECTURAL DRAWINGS FOR EXTENTS AND DIMENSIONS OF RAISED OR DEPRESSED SLAB AREAS, SLOPES, CURBS, AND DRAINS. REFER TO TYPICAL DETAILS FOR REINFORCEMENT REQUIREMENTS.
7. CONTRACTOR SHALL COORDINATE ALL MECHANICAL, ELECTRICAL, AND PLUMBING PENETRATIONS AND OPENINGS (INCLUDING THOSE NOT EXPLICITLY DEFINED IN THE STRUCTURAL DRAWINGS) PRIOR TO FABRICATION OF REINFORCEMENT AND CASTING OF CONCRETE.
8. FP1 SHALL BE A 7" DIAMETER WEB OPENING CENTERED IN THE DEPTH OF THE BEAM.
9. REFER TO SLAB ON GRADE PLAN FOR BALANCE OF DIMENSION INFORMATION.
10. COMPOSITE ROOF DECK SHALL BE NORMAL WEIGHT CONCRETE 3.5" THICK OVER 18 GAGE, 2" DEEP (G60) COMPOSITE METAL DECK REINFORCED WITH 6x6 - W2.1xW2.1 WWR (TOTAL SLAB THICKNESS = 5.5".
11. S1 = 6" NWT. CONCRETE SLAB REINFORCED WITH #5@12 EA. WAY TOP AND BOTTOM
12. CONNECTIONS OF COMPOSITE SLAB ROOF BEAMS TO CIP CONCRETE STRUCTURE SHALL BE MADE WITH SHORT SLOTTED HOLES PARALLEL TO THE BEAM AXIS.
13. LOW RISE STEEL FRAMING (INCLUDING CAFETERIA SHALL BE ERECTED ONLY AFTER THE TOWER ROOF FRAMING PLAN IS IN PLACE.
14. ROOF DECK SHALL BE 18 GAGE 1.5" METAL ROOF DECK.
15. AT LEVELS 3 THROUGH ROOF, ALL PAN-FORMED BEAMS BETWEEN GRIDS 5.1 AND 12 SHALL BE CAMBERED 1.0" AT MID-SPAN BETWEEN GRIDS A-B AND C-D AS SHOWN EXCEPT THAT PERIMETER BEAMS AND BEAMS CENTERED ON NUMBERED GRIDS SHALL NOT RECEIVE CAMBER. BEAMS OTHER THAN 25" IN DEPTH SHALL NOT RECEIVE CAMBER.
16. PROVIDE (2) ADDITIONAL #4 BARS WITHIN 12" OF OPENING EDGE WHERE NOTED. PROVIDE STANDARD ACI HOOK AT SHEAR WALL, AND STRAIGHT DEVELOPMENT LENGTH BEYOND EDGE OF OPENING.
17. ALL STEEL ROOF AND COMPOSITE ROOF FRAMING REACTIONS NOT INDICIATED ON PLAN SHALL BE DESIGNED FOR A MINIMUM 12 KIP ULTIMATE SHEAR REACTION AT EACH END.
18. CONTRACTOR SHALL COORDINATE ALL ELEVATOR OPENINGS, PIT DEPTHS, HOIST BEAMS AND SUPPORTS, SUMP PIT DIMENSIONS AND REQUIREMENTS WITH ELEVATOR MFR.
19. PROVIDE STD HOOK OF SLAB REINFORCEMENT CENTER IN SHEAR WALLS

KEYPLAN

GRAPHIC SCALE 0 8 16 24 — SCALE IN FEET 1/8" = 1'-0"

REVISIONS			
SYM	ZONE		DATE APPROVED

WALTER P MOORE
WALTER P. MOORE AND ASSOCIATES, INC.
500 SOUTH ORANGE AVENUE, SUITE 1100
ORLANDO, FLORIDA 32801-3332
PHONE: 407.418.2218 FAX: 407.418.2267
CERTIFICATE OF AUTHORIZATION NO. 3818
407-11005-00

JAIME E. VASQUEZ P.E. NO. 49103
TO THE BEST OF THE ENGINEER'S KNOWLEDGE, THE PLANS AND SPECIFICATIONS COMPLY WITH THE APPLICABLE MINIMUM BUILDING CODES

SIGNATURES	DATE
DRAWN ANDREW MYERS	12.18.13
CHECKED JAIME E. VASQUEZ	12.18.13
SUBMITTED, ACCHING OF RECORD JAIME E. VASQUEZ	12.18.13
ST of LICENSURE: FL LICENSE NO: 49103	
APPROVED JOSEPH M. ALES	12.18.13
BRUCE KINNAIRD	12/19/13

NATIONAL AERONAUTICS AND SPACE ADMINISTRATION
JOHN F. KENNEDY SPACE CENTER, NASA
KENNEDY SPACE CENTER, FLORIDA

KSC CENTRAL CAMPUS
REPLACEMENT HEADQUARTERS BUILDING
PHASE 1
VOL. 1 OF 4
FLOOR FRAMING PLAN - 2ND LVL AREA 1

FILE NO.	SIZE	DWG. NO.
C-12070.00	F	79K39622 VOL 1

PCN. NO. 98745.1a — SHEET 116

S121

KSC FORM 1-11 (3/76)(C/G 3/94)

NOTICE: When Government drawings, specifications, or other data are used for any purpose other than in connection with a definitely related Government procurement operation, the United States Government thereby incurs no responsibility nor obligation whatsoever; and the fact that the Government may have formulated, furnished, or in any way supplied the said drawings, specifications or other data is not to be regarded by implication or otherwise as in any manner licensing the holder or any other person or corporation, or conveying any rights or permission to manufacture, use, or sell any patented invention that may in any way be related thereto.

DIMENSION PLAN - 2ND LEVEL - AREA 1

1/8" = 1'-0"

GRAPHIC SCALE

0 8 16 24

SCALE IN FEET
1/8" = 1'-0"

KEYPLAN

S121D

KSC FORM 1-11 (3/76)(O/G 3/94)

SYM	ZONE	REVISIONS	DATE	APPROVED

WALTER P MOORE
WALTER P. MOORE AND ASSOCIATES, INC.
500 SOUTH ORANGE AVENUE, SUITE 1100
ORLANDO, FLORIDA 32801.3332
PHONE: 407.418.2218 FAX: 407.418.2267
CERTIFICATE OF AUTHORIZATION NO. 3018
007-11023.00
JAIME E. VASQUEZ P.E. NO. 49103
TO THE BEST OF THE ENGINEER'S KNOWLEDGE, THE PLANS AND SPECIFICATIONS COMPLY WITH THE APPLICABLE MINIMUM BUILDING CODES

SIGNATURES	DATE
DRAWN	
ANDREW MYERS	12.18.13
CHECKED	
JAIME E. VASQUEZ	12.18.13
SUBMITTED, ARCHITECT OF RECORD	
JAIME E. VASQUEZ	12/18/13
ST of LICENSURE: FL	
LICENSE NO: 49103	
APPROVED	
JOSEPH M. ALES	12/18/13
BRUCE KINNAIRD	12/19/13

NATIONAL AERONAUTICS AND SPACE ADMINISTRATION
JOHN F. KENNEDY SPACE CENTER, NASA
KENNEDY SPACE CENTER, FLORIDA

KSC CENTRAL CAMPUS
REPLACEMENT HEADQUARTERS BUILDING
PHASE 1
VOL. 1 OF 4

DIMENSION PLAN - 2ND LVL - AREA 1

FILE NO.	SIZE	DWG. NO.
C-12070.00	F	79K39622 VOL 1

PCN. NO. 98745.1a SHEET 117

NOTICE: When Government drawings, specifications, or other data are used for any purpose other than in connection with a definitely related Government procurement operation, the United States Government thereby incurs no responsibility nor obligation whatsoever; and the fact that the Government may have formulated, furnished, or in any way supplied the said drawings, specifications or other data is not to be regarded by implication or otherwise as in any manner licensing the holder or any other person or corporation, or conveying any rights or permission to manufacture, use, or sell any patented invention that may in any way be related thereto.

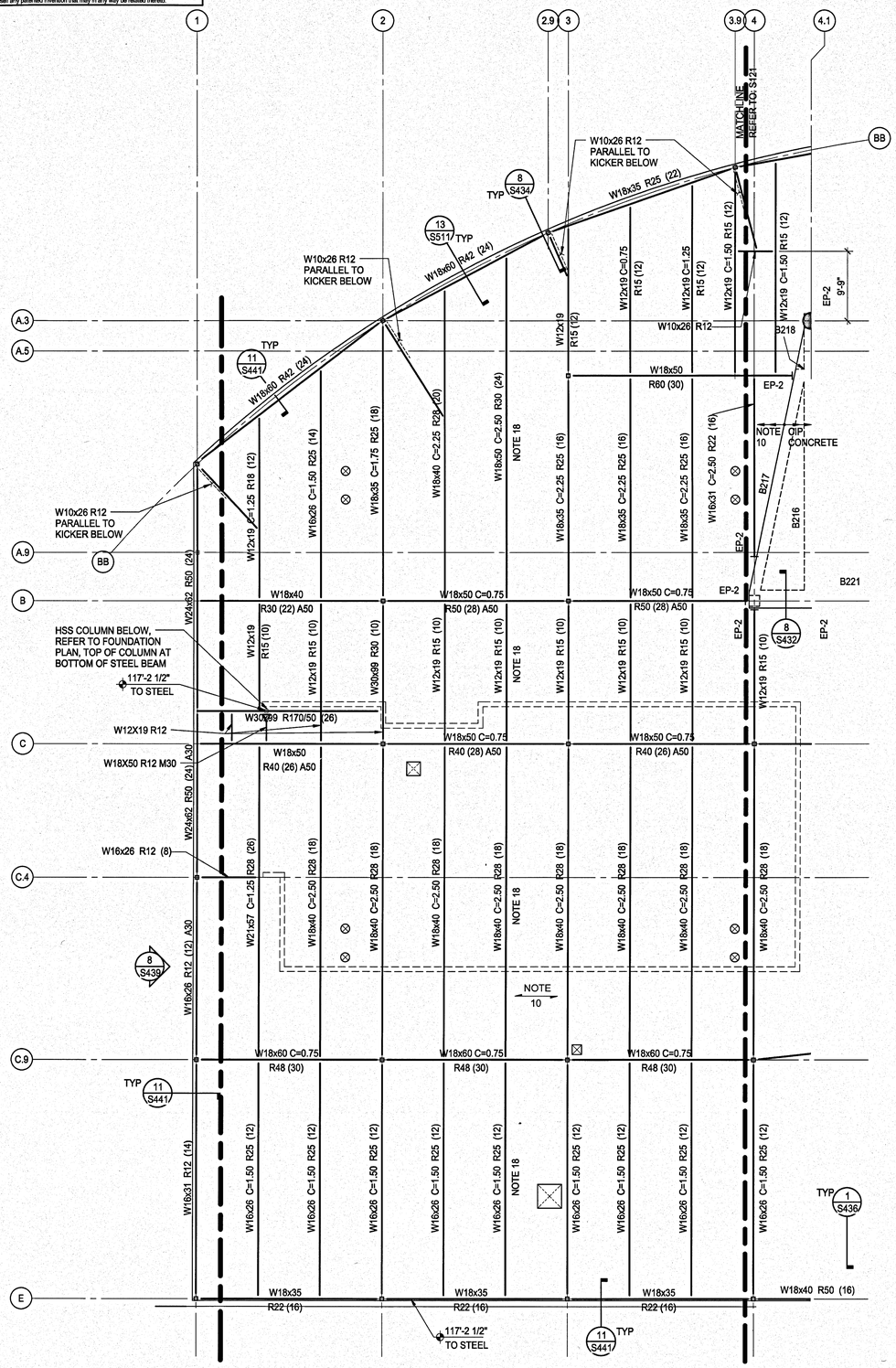

ROOF FRAMING PLAN - 2ND LEVEL - AREA 2

1/8" = 1'-0"

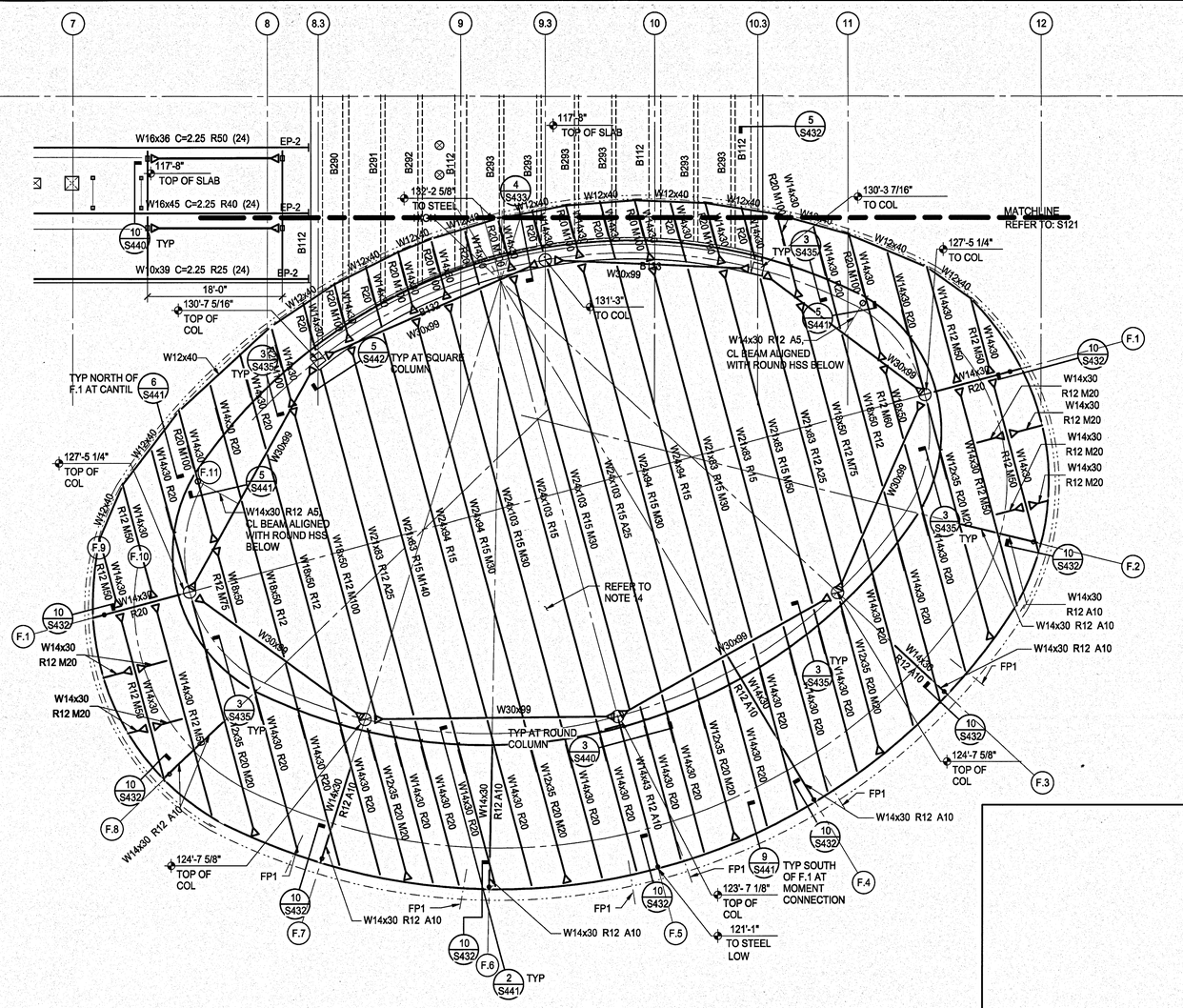

ROOF FRAMING PLAN - 2ND LEVEL - AREA 3

1/8" = 1'-0"

PLAN NOTES

1. CIVIL DRAWINGS ELEVATION 11.30' = DATUM ELEVATION 100'-0".
2. TYPICAL SLAB CONSTRUCTION SHALL BE NORMAL WEIGHT CONCRETE 5" THICK WITH #4 @12" EACH WAY, CENTERED IN THE SLAB THICKNESS, UNO.
3. PROVIDE (2) #4x4'-0" ADDITIONAL SLAB REINFORCEMENT AT ALL RE-ENTRANT CORNERS.
4. REFER TO SHEET S215 FOR COLUMN SCHEDULES.
5. REFER TO SHEETS S202-S203 FOR SHEAR WALL ELEVATIONS.
6. REFER TO ARCHITECTURAL DRAWINGS FOR EXTENTS AND DIMENSIONS OF RAISED OR DEPRESSED SLAB AREAS, SLOPES, CURBS, AND DRAINS. REFER TO TYPICAL DETAILS FOR REINFORCEMENT REQUIREMENTS.
7. REFER TO MECHANICAL, ELECTRICAL, AND PLUMBING DRAWINGS FOR ALL PENETRATIONS AND OPENINGS (INCLUDING THOSE NOT EXPLICITLY DEFINED IN THE STRUCTURAL DRAWINGS) PRIOR TO FABRICATION OF REINFORCEMENT AND CASTING OF CONCRETE.
8. FP1 SHALL BE A 7" DIAMETER WEB OPENING CENTERED IN THE DEPTH OF THE BEAM.
9. REFER TO SLAB ON GRADE PLAN FOR BALANCE OF DIMENSION INFORMATION.
10. COMPOSITE ROOF DECK SHALL BE NORMAL WEIGHT CONCRETE 3.5" THICK OVER 18 GAGE, 2" DEEP (G60) COMPOSITE METAL DECK REINFORCED WITH 6x6 - W2.1xW2.1 WWR (TOTAL SLAB THICKNESS = 5.5".
11. S1 = 6" NWT. CONCRETE SLAB REINFORCED WITH #5@12 EA. WAY TOP AND BOTTOM
12. CONNECTIONS OF COMPOSITE SLAB ROOF BEAMS TO CIP CONCRETE STRUCTURE SHALL BE MADE WITH SHORT SLOTTED HOLES PARALLEL TO THE BEAM AXIS.
13. LOW RISE STEEL FRAMING (INCLUDING CAFETERIA SHALL BE ERECTED ONLY AFTER THE TOWER ROOF FRAMING PLAN IS IN PLACE.
14. ROOF DECK SHALL BE 18 GAGE 1.5" METAL ROOF DECK.
15. AT LEVELS 3 THROUGH ROOF, ALL PAN-FORMED BEAMS BETWEEN GRIDS 5.1 AND 12 SHALL BE CAMBERED 1" AT MID-SPAN BETWEEN GRIDS A-B AND C-D AS SHOWN EXCEPT THAT PERIMETER BEAMS AND BEAMS CENTERED ON NUMBERED GRIDS SHALL NOT RECEIVE CAMBER. BEAMS 29" IN DEPTH SHALL NOT RECEIVE CAMBER.
16. PROVIDE (2) ADDITIONAL #4 BARS WITHIN 12" OF OPENING EDGE. PROVIDE STANDARD ACI HOOK AT SHEAR WALL, AND STRAIGHT DEVELOPMENT LENGTH BEYOND EDGE OF OPENING.
17. ALL STEEL ROOF AND COMPOSITE ROOF FRAMING REACTIONS NOT INDICIATED ON PLAN SHALL BE DESIGNED FOR A MINIMUM 12 KIP ULTIMATE SHEAR REACTION AT EACH END.
18. PLACE (4) #4 CONTINUOUS BARS CENTER IN SLAB @ 6" SPACING ALONG BEAMS OR GRIDS WHERE INDICATED.

GRAPHIC SCALE
0 8 16 24
SCALE IN FEET
1/8" = 1'-0"

KEYPLAN

S122

SYM	ZONE		DATE	APPROVED
		REVISIONS		

WALTER P MOORE
WALTER P. MOORE AND ASSOCIATES, INC.
300 SOUTH ORANGE AVENUE, SUITE 1100
ORLANDO, FLORIDA 32801,3332
PHONE: 407.418.2218 FAX: 407.418.2267
CERTIFICATE OF AUTHORIZATION NO. 3818
500-11203-00
JAIME E. VASQUEZ P.E. NO. 49103
TO THE BEST OF THE ENGINEER'S KNOWLEDGE, THE PLANS AND SPECIFICATIONS COMPLY WITH THE APPLICABLE MINIMUM BUILDING CODES

SIGNATURES	DATE
DRAWN ANDREW MYERS	12.18.13
CHECKED JAIME E. VASQUEZ	12.18.13
SUBMITTED: ARCHITECT OF RECORD JAIME E. VASQUEZ	12.18.13
ST of LICENSURE: FL LICENSE NO: 49103	
APPROVED JOSEPH M. ALES	12.18.13
BRUCE KINNAIRD	12/18/13

NATIONAL AERONAUTICS AND SPACE ADMINISTRATION
JOHN F. KENNEDY SPACE CENTER, NASA
KENNEDY SPACE CENTER, FLORIDA

KSC CENTRAL CAMPUS
REPLACEMENT HEADQUARTERS BUILDING
PHASE 1
VOL. 1 OF 4
ROOF FRAMING PLAN - 2ND LVL AREA 2 & 3

FILE NO.	SIZE	DWG. NO.
C-12070.00	F	79K39622 VOL 1
PCN. NO. 98745.1a		SHEET 118

NOTICE: When Government drawings, specifications, or other data are used for any purpose other than in connection with a definitely related Government procurement operation, the United States Government thereby incurs no responsibility nor obligation whatsoever; and the fact that the Government may have formulated, furnished, or in any way supplied the said drawings, specifications or other data is not to be regarded by implication or otherwise as in any manner licensing the holder or any other person or corporation, or conveying any rights or permission to manufacture, use, or sell any patented invention that may in any way be related thereto.

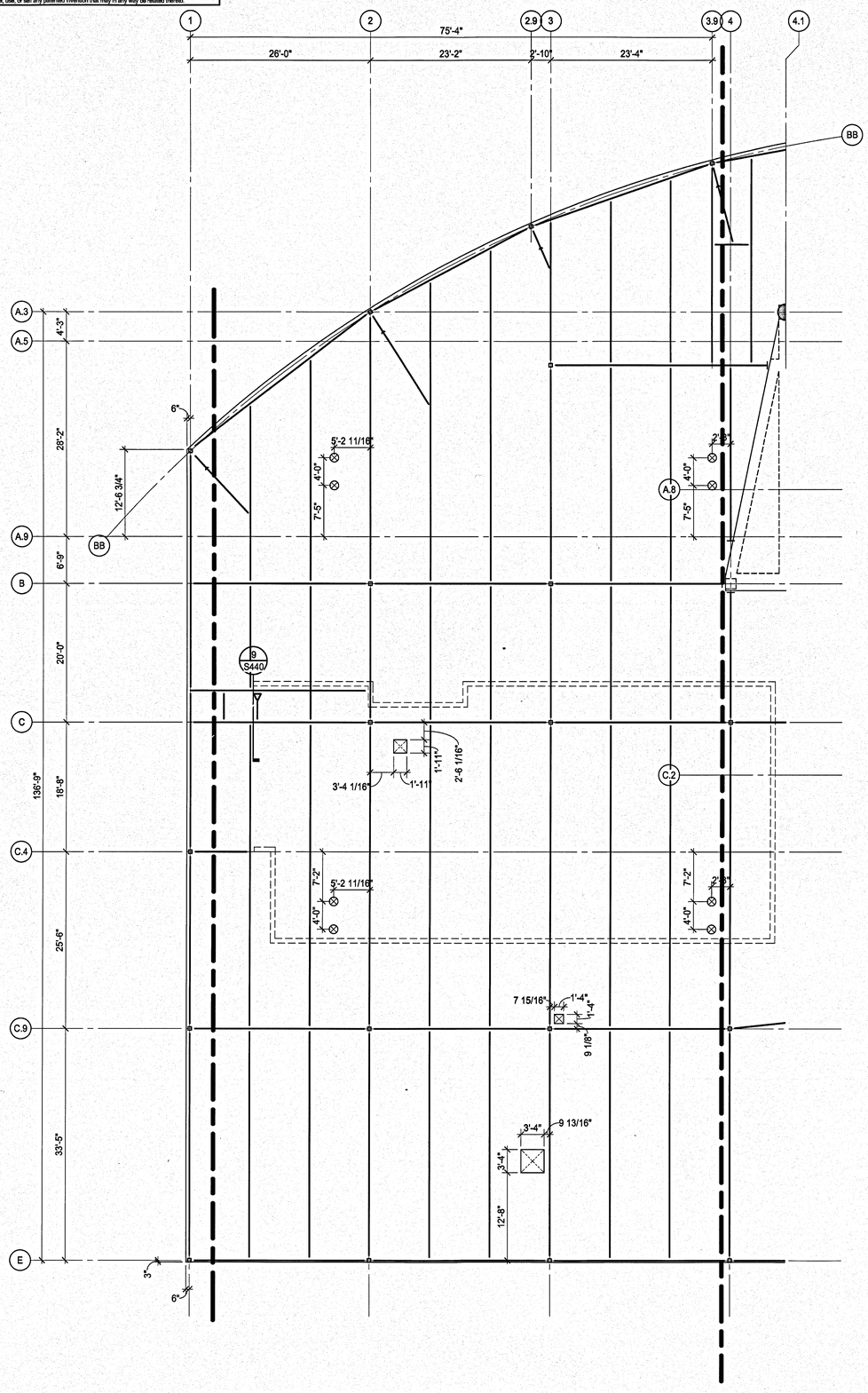

ROOF DIMENSION PLAN - 2ND LEVEL - AREA 2

1/8" = 1'-0"

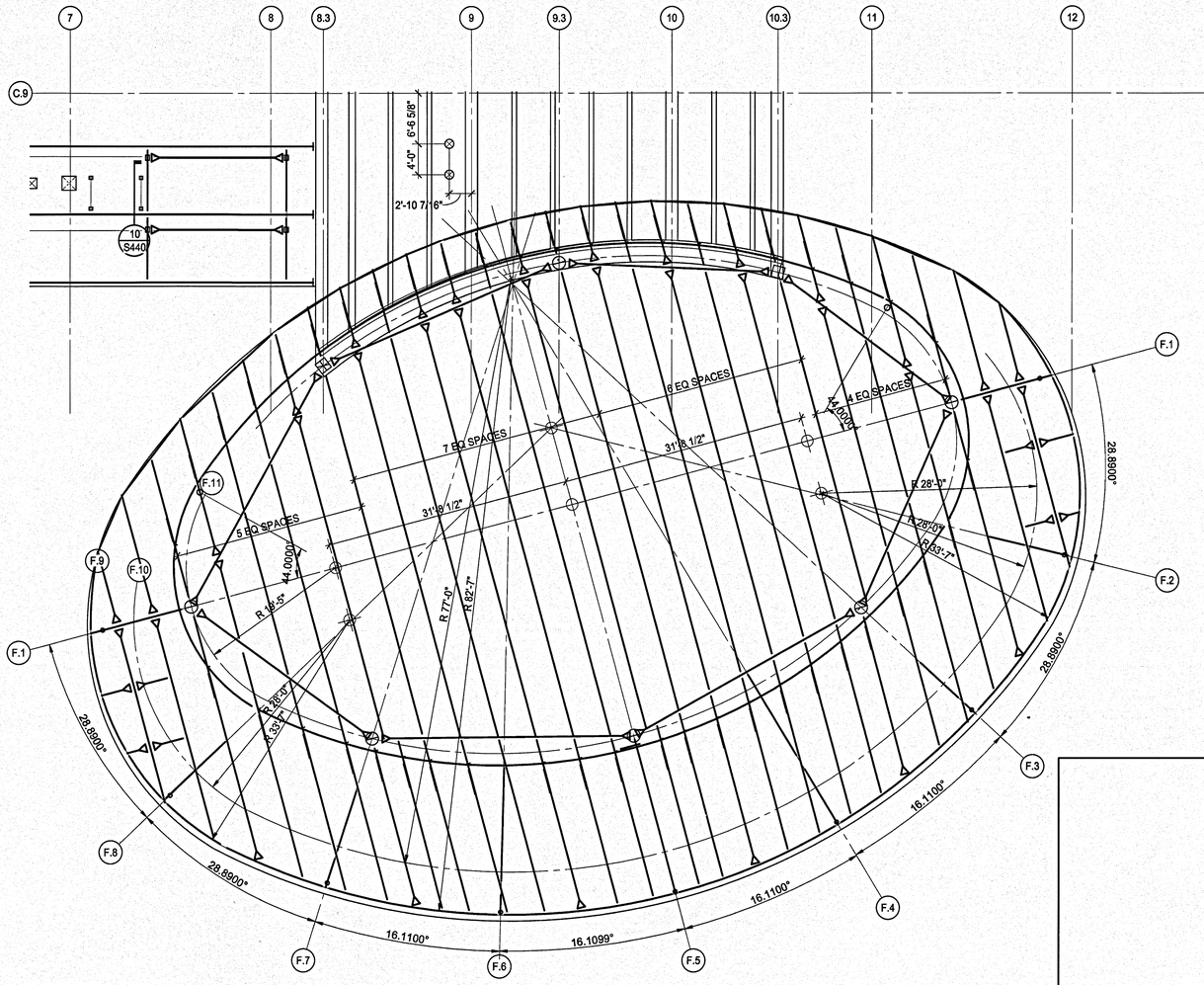

ROOF DIMENSION PLAN - 2ND LEVEL - AREA 3

1/8" = 1'-0"

KEYPLAN

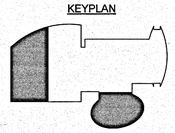

GRAPHIC SCALE

0 8 16 24

SCALE IN FEET
1/8" = 1'-0"

S122D

SYM	ZONE		DATE	APPROVED
		REVISIONS		

WALTER P MOORE
WALTER P. MOORE AND ASSOCIATES, INC.
300 SOUTH ORANGE AVENUE, SUITE 1150
ORLANDO, FLORIDA 32801,3332
PHONE: 407.418.2218 FAX: 407.418.2267
CERTIFICATE OF AUTHORIZATION NO. 3818
S07-11029-00
JAIME E. VASQUEZ P.E. NO. 49103
TO THE BEST OF THE ENGINEER'S KNOWLEDGE, THE PLANS AND SPECIFICATIONS COMPLY WITH THE APPLICABLE MINIMUM BUILDING CODES

SIGNATURES	DATE
DRAWN ANDREW MYERS	12.18.13
CHECKED JAIME E. VASQUEZ	12.18.13
SUBMITTED, ARCHENG OF RECORD JAIME E. VASQUEZ	12.18.13
ST of LICENSURE: FL LICENSE NO: 49103	
APPROVED JOSEPH W. ALES	12.18.13
BRUCE KINNAIRD	12/18/13

NATIONAL AERONAUTICS AND SPACE ADMINISTRATION
JOHN F. KENNEDY SPACE CENTER, NASA
KENNEDY SPACE CENTER, FLORIDA

KSC CENTRAL CAMPUS
REPLACEMENT HEADQUARTERS BUILDING
PHASE 1
VOL. 1 OF 4

DIMENSION PLAN - 2ND LVL - AREA 2 AND 3

FILE NO.	SIZE	DWG. NO.
C-12070.00	F	79K39622 VOL 1

PCN. NO. 98745.1a SHEET 119

KSC FORM 1-11 (3/76)(C/G 3/94)

NOTICE: When Government drawings, specifications, or other data are used for any purpose other than in connection with a definitely related Government procurement operation, the United States Government thereby incurs no responsibility nor obligation whatsoever; and the fact that the Government may have formulated, furnished, or in any way supplied the said drawings, specifications or other data is not to be regarded by implication or otherwise as in any manner licensing the holder or any other person or corporation, or conveying any rights or permission to manufacture, use, or sell any patented invention that may in any way be related thereto.

PLAN NOTES

1. CIVIL DRAWINGS ELEVATION 11.30' = DATUM ELEVATION 100'-0".
2. TYPICAL SLAB CONSTRUCTION SHALL BE NORMAL WEIGHT CONCRETE 5" THICK WITH #4@ 12" EACH WAY, CENTERED IN THE SLAB THICKNESS, UNO.
3. PROVIDE (2) #4x4'-0" ADDITIONAL SLAB REINF AT ALL RE-ENTRANT CORNERS.
4. REFER TO SHEET S215 FOR COLUMN SCHEDULES.
5. REFER TO SHEETS S202-S203 FOR SHEAR WALL ELEVATIONS.
6. REFER TO ARCHITECTURAL DRAWINGS FOR EXTENTS AND DIMENSIONS OF RAISED OR DEPRESSED SLAB AREAS, SLOPES, CURBS, AND DRAINS. REFER TO TYPICAL DETAILS FOR REINFORCEMENT REQUIREMENTS.
7. CONTRACTOR SHALL COORDINATE ALL MECHANICAL, ELECTRICAL, AND PLUMBING PENETRATIONS AND OPENINGS (INCLUDING THOSE NOT EXPLICITLY DEFINED IN THE STRUCTURAL DRAWINGS) PRIOR TO FABRICATION OF REINFORCEMENT AND CASTING OF CONCRETE.
8. FP1 SHALL BE A 7" DIAMETER WEB OPENING CENTERED IN THE DEPTH OF THE BEAM.
9. REFER TO SLAB ON GRADE PLAN FOR BALANCE OF DIMENSION INFORMATION.
10. COMPOSITE ROOF DECK SHALL BE NORMAL WEIGHT CONCRETE 3.5" THICK OVER 18 GAGE, 2" DEEP (G60) COMPOSITE METAL DECK REINFORCED WITH 6x6 - W2.1xW2.1 WWR (TOTAL SLAB THICKNESS = 5.5".
11. S1 = 6" NWT. CONCRETE SLAB REINFORCED WITH #5@12 EA. WAY TOP AND BOTTOM
12. CONNECTIONS OF COMPOSITE SLAB ROOF BEAMS TO CIP CONCRETE STRUCTURE SHALL BE MADE WITH SHORT SLOTTED HOLES PARALLEL TO THE BEAM AXIS.
13. LOW RISE STEEL FRAMING (INCLUDING CAFETERIA SHALL BE ERECTED ONLY AFTER THE TOWER ROOF FRAMING PLAN IS IN PLACE.
14. ROOF DECK SHALL BE 18 GAGE 1.5" METAL ROOF DECK.
15. AT LEVELS 3 THROUGH ROOF, ALL PAN-FORMED BEAMS BETWEEN GRIDS 5.1 AND 12 SHALL BE CAMBERED 1.0" AT MID-SPAN BETWEEN GRIDS A-B AND C-D AS SHOWN EXCEPT THAT PERIMETER BEAMS AND BEAMS CENTERED ON NUMBERED GRIDS SHALL NOT RECEIVE CAMBER. BEAMS OTHER THAN 25" IN DEPTH SHALL NOT RECEIVE CAMBER.
16. PROVIDE (2) ADDITIONAL #4 BARS WITHIN 12" OF OPENING EDGE WHERE NOTED. PROVIDE STANDARD ACI HOOK AT SHEAR WALL, AND STRAIGHT DEVELOPMENT LENGTH BEYOND EDGE OF OPENING.
17. ALL STEEL ROOF AND COMPOSITE ROOF FRAMING REACTIONS NOT INDICIATED ON PLAN SHALL BE DESIGNED FOR A MINIMUM 12 KIP ULTIMATE SHEAR REACTION AT EACH END.
18. CONTRACTOR SHALL COORDINATE ALL ELEVATOR OPENINGS, PIT DEPTHS, HOIST BEAMS AND SUPPORTS, SUMP PIT DIMENSIONS AND REQUIREMENTS WITH ELEVATOR MFR.
19. PROVIDE STD HOOK OF SLAB REINFORCEMENT CENTER IN SHEAR WALLS

GLAZING BRACE, TYP

HSS5x5x1/4 BELOW BO STL EL= 129'-7" TYPICAL

REFER TO NOTE 15

PRECAST GRAVITY CONNECTION TO ADJACENT BEAMS OR PANELS ONLY

POUR STRIP REF 4/S424

WIDENED BEAM B121

WIDENED BEAM B751

WIDENED BEAM

TYP FRAMING ABOVE

135'-0" TOP OF SLAB

7" STEP

HSS5x5x1/4 BELOW BO STL EL= 129'-7" TYPICAL

HSS8.000x0.312 TAPERED

PRECAST GRAVITY CONNECTION TO ADJACENT BEAMS OR PANELS ONLY

POUR STRIP REF 4/S424

HSS8.000x0.312 TAPERED

FLOOR FRAMING PLAN - 3RD LEVEL

1/8" = 1'-0"

GRAPHIC SCALE
0 8 16 24
SCALE IN FEET
1/8" = 1'-0"

S131

SYM	ZONE		DATE	APPROVED

REVISIONS

WALTER P MOORE
WALTER P. MOORE AND ASSOCIATES, INC.
300 SOUTH ORANGE AVENUE, SUITE 1100
ORLANDO, FLORIDA 32801.8332
PHONE: 407.418.2218 FAX: 407.418.2257
CERTIFICATE OF AUTHORIZATION NO. 3818
907-11023-00
JAIME E. VASQUEZ P.E. NO. 49103
TO THE BEST OF THE ENGINEER'S KNOWLEDGE, THIS PLANS AND SPECIFICATIONS COMPLY WITH THE APPLICABLE MINIMUM BUILDING CODES

SIGNATURES	DATE
DRAWN	
ANDREW MYERS	12.18.13
CHECKED	
JAIME E. VASQUEZ	12.18.13
SUBMITTED, ARCHITECT OF RECORD	
JAIME E. VASQUEZ	12.18.13
ST of LICENSURE: FL	
LICENSE NO: 49103	
APPROVED	
ROBERT M. GRAVES	12.18.13
BRUCE KINNAIRD	12/18/13

NATIONAL AERONAUTICS AND SPACE ADMINISTRATION
JOHN F. KENNEDY SPACE CENTER, NASA
KENNEDY SPACE CENTER, FLORIDA

KSC CENTRAL CAMPUS
REPLACEMENT HEADQUARTERS BUILDING
PHASE 1
VOL. 1 OF 4
FLOOR FRAMING PLAN - 3RD LVL
AREA 1

FILE NO.	SIZE	DWG. NO.
C-12070.00	F	79K39622 VOL 1
PCN. NO. 98745.1a		SHEET 120

KSC FORM 1-11 (3/76)(C/G 3/94)

NOTICE: When Government drawings, specifications, or other data are used for any purpose other than in connection with a definitely related Government procurement operation, the United States Government thereby incurs no responsibility nor obligation whatsoever; and the fact that the Government may have formulated, furnished, or in any way supplied the said drawings, specifications or other data is not to be regarded by implication or otherwise as in any manner licensing the holder or any other person or corporation, or conveying any rights or permission to manufacture, use, or sell any patented invention that may in any way be related thereto.

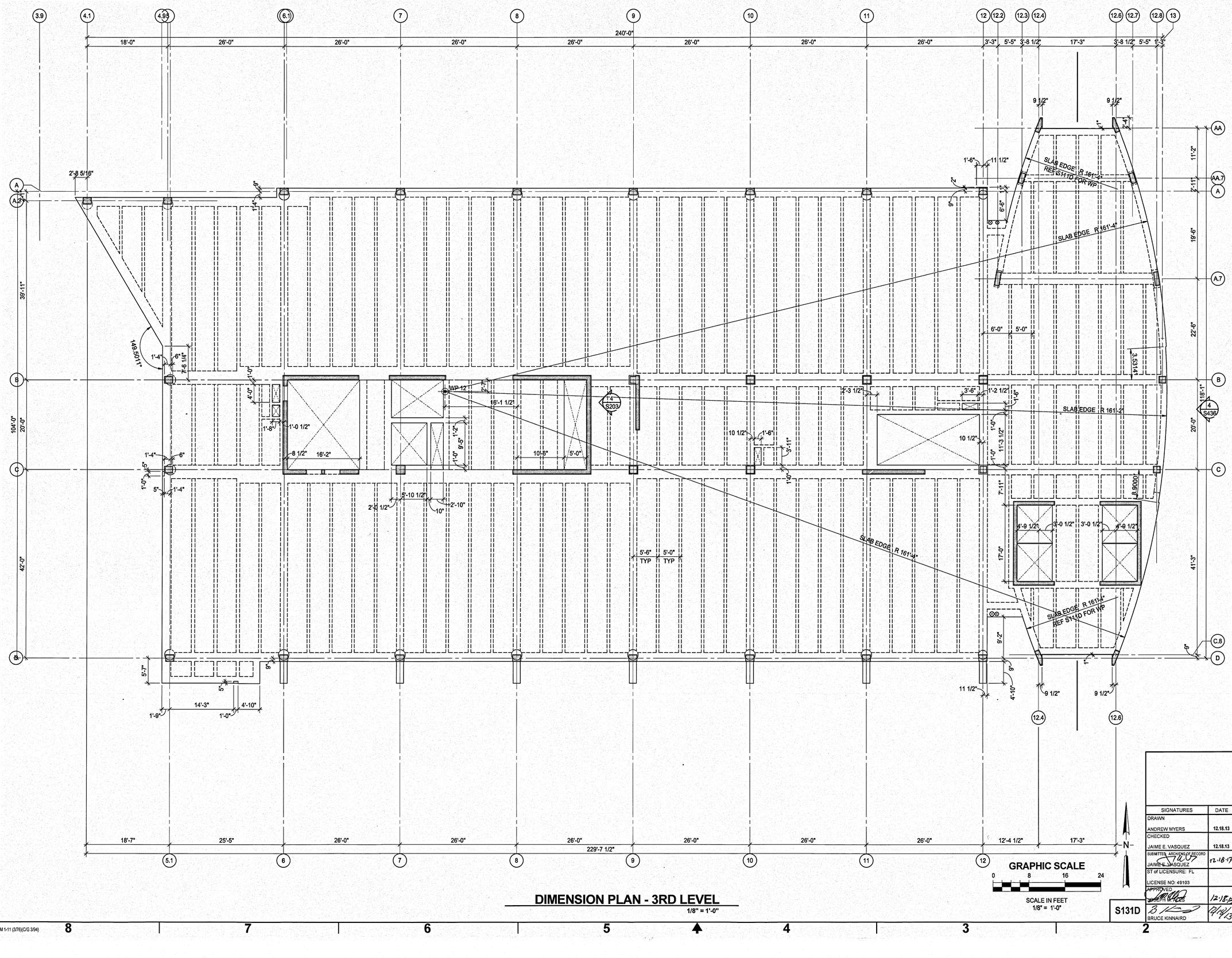

DIMENSION PLAN - 3RD LEVEL

1/8" = 1'-0"

SYM	ZONE		DATE	APPROVED

REVISIONS

WALTER P MOORE
WALTER P. MOORE AND ASSOCIATES, INC.
500 SOUTH ORANGE AVENUE, SUITE 1100
ORLANDO, FLORIDA 32801.3332
PHONE: 407.418.2218 FAX: 407.418.2267
CERTIFICATE OF AUTHORIZATION NO. 3616
500-11003-00
JAIME E. VASQUEZ P.E. NO. 49103
TO THE BEST OF THE ENGINEER'S KNOWLEDGE, THE PLANS AND SPECIFICATIONS COMPLY WITH THE APPLICABLE MINIMUM BUILDING CODES

SIGNATURES	DATE
DRAWN	
ANDREW MYERS	12.18.13
CHECKED	
JAIME E. VASQUEZ	12.18.13
SUBMITTED, ARCHIVING OF RECORD	
JAIME E. VASQUEZ	12.18.13
ST of LICENSURE: FL	
LICENSE NO: 49103	
APPROVED	
JOSEPH P. COSS	12.18.13
BRUCE KINNAIRD	12/18/13

NATIONAL AERONAUTICS AND SPACE ADMINISTRATION
JOHN F. KENNEDY SPACE CENTER, NASA
KENNEDY SPACE CENTER, FLORIDA

KSC CENTRAL CAMPUS
REPLACEMENT HEADQUARTERS BUILDING
PHASE 1
VOL. 1 OF 4

DIMENSION PLAN - 3RD LVL - AREA 1

FILE NO.	SIZE	DWG. NO.
C-12070.00	F	79K39622 VOL 1
PCN. NO. 98745.1a		SHEET 121

S131D

KSC FORM 1-11 (3/78)(C/G 3/94)

NOTICE: When Government drawings, specifications, or other data are used for any purpose other than in connection with a definitely related Government procurement operation, the United States Government thereby incurs no responsibility nor obligation whatsoever; and the fact that the Government may have formulated, furnished, or in any way supplied the said drawings, specifications or other data is not to be regarded by implication or otherwise as in any manner licensing the holder or any other person or corporation, or conveying any rights or permission to manufacture, use, or sell any patented invention that may in any way be related thereto.

PLAN NOTES

1. CIVIL DRAWINGS ELEVATION 11.30' = DATUM ELEVATION 100'-0".
2. TYPICAL SLAB CONSTRUCTION SHALL BE NORMAL WEIGHT CONCRETE 5" THICK WITH #4@ 12" EACH WAY, CENTERED IN THE SLAB THICKNESS, UNO.
3. PROVIDE (2) #4x4'-0" ADDITIONAL SLAB REINF AT ALL RE-ENTRANT CORNERS.
4. REFER TO SHEET S215 FOR COLUMN SCHEDULES.
5. REFER TO SHEETS S202-S203 FOR SHEAR WALL ELEVATIONS.
6. REFER TO ARCHITECTURAL DRAWINGS FOR EXTENTS AND DIMENSIONS OF RAISED OR DEPRESSED SLAB AREAS, SLOPES, CURBS, AND DRAINS. REFER TO TYPICAL DETAILS FOR REINFORCEMENT REQUIREMENTS.
7. CONTRACTOR SHALL COORDINATE ALL MECHANICAL, ELECTRICAL, AND PLUMBING PENETRATIONS AND OPENINGS (INCLUDING THOSE NOT EXPLICITLY DEFINED IN THE STRUCTURAL DRAWINGS) PRIOR TO FABRICATION OF REINFORCEMENT AND CASTING OF CONCRETE.
8. FP1 SHALL BE A 7" DIAMETER WEB OPENING CENTERED IN THE DEPTH OF THE BEAM.
9. REFER TO SLAB ON GRADE PLAN FOR BALANCE OF DIMENSION INFORMATION.
10. COMPOSITE ROOF DECK SHALL BE NORMAL WEIGHT CONCRETE 3.5" THICK OVER 18 GAGE, 2" DEEP (G60) COMPOSITE METAL DECK REINFORCED WITH 6x6 - W2.1xW2.1 WWR (TOTAL SLAB THICKNESS = 5.5".
11. S1 = 6" NWT. CONCRETE SLAB REINFORCED WITH #5@12 EA. WAY TOP AND BOTTOM
12. CONNECTIONS OF COMPOSITE SLAB ROOF BEAMS TO CIP CONCRETE STRUCTURE SHALL BE MADE WITH SHORT SLOTTED HOLES PARALLEL TO THE BEAM AXIS.
13. LOW RISE STEEL FRAMING (INCLUDING CAFETERIA SHALL BE ERECTED ONLY AFTER THE TOWER ROOF FRAMING PLAN IS IN PLACE.
14. ROOF DECK SHALL BE 18 GAGE 1.5" METAL ROOF DECK.
15. AT LEVELS 3 THROUGH ROOF, ALL PAN-FORMED BEAMS BETWEEN GRIDS 5.1 AND 12 SHALL BE CAMBERED 1.0" AT MID-SPAN BETWEEN GRIDS A-B AND C-D AS SHOWN EXCEPT THAT PERIMETER BEAMS AND BEAMS CENTERED ON NUMBERED GRIDS SHALL NOT RECEIVE CAMBER. BEAMS OTHER THAN 25" IN DEPTH SHALL NOT RECEIVE CAMBER.
16. PROVIDE (2) ADDITIONAL #4 BARS WITHIN 12" OF OPENING EDGE WHERE NOTED. PROVIDE STANDARD ACI HOOK AT SHEAR WALL, AND STRAIGHT DEVELOPMENT LENGTH BEYOND EDGE OF OPENING.
17. ALL STEEL ROOF AND COMPOSITE ROOF FRAMING REACTIONS NOT INDICIATED ON PLAN SHALL BE DESIGNED FOR A MINIMUM 12 KIP ULTIMATE SHEAR REACTION AT EACH END.
18. CONTRACTOR SHALL COORDINATE ALL ELEVATOR OPENINGS, PIT DEPTHS, HOIST BEAMS AND SUPPORTS, SUMP PIT DIMENSIONS AND REQUIREMENTS WITH ELEVATOR MFR.
19. PROVIDE STD HOOK OF SLAB REINFORCEMENT CENTER IN SHEAR WALLS

FLOOR FRAMING PLAN - 4TH LEVEL

1/8" = 1'-0"

GRAPHIC SCALE

0 8 16 24

SCALE IN FEET
1/8" = 1'-0"

SYM	ZONE		DATE	APPROVED

REVISIONS

WALTER P MOORE
WALTER P. MOORE AND ASSOCIATES, INC.
900 SOUTH ORANGE AVENUE, SUITE 1100
ORLANDO, FLORIDA 32801.3892
PHONE: 407.418.2218 FAX: 407.418.2267
CERTIFICATE OF AUTHORIZATION NO. 3818
JAIME E. VASQUEZ, P.E. NO. 49103
TO THE BEST OF THE ENGINEER'S KNOWLEDGE, THE PLANS AND SPECIFICATIONS COMPLY WITH THE APPLICABLE MINIMUM BUILDING CODES

SIGNATURES	DATE
DRAWN ANDREW MYERS	12.18.13
CHECKED JAIME E. VASQUEZ	12.18.13
SUBMITTED JAIME E. VASQUEZ	12.18.13
ST of LICENSURE: FL LICENSE NO: 49103	
APPROVED JOSEPH MYERS	12.18.13
BRUCE KINNAIRD	12/18/13

NATIONAL AERONAUTICS AND SPACE ADMINISTRATION
JOHN F. KENNEDY SPACE CENTER, NASA
KENNEDY SPACE CENTER, FLORIDA

KSC CENTRAL CAMPUS
REPLACEMENT HEADQUARTERS BUILDING
PHASE 1
VOL. 1 OF 4
FLOOR FRAMING PLAN - 4TH LVL
AREA 1

FILE NO.	SIZE	DWG. NO.
C-12070.00	F	79K39622 VOL 1
PCN. NO. 98745.1a		SHEET 122

S141

KSC FORM 1-11 (3/76)(C/G 3/94)

NOTICE: When Government drawings, specifications, or other data are used for any purpose other than in connection with a definitely related Government procurement operation, the United States Government thereby incurs no responsibility nor obligation whatsoever; and the fact that the Government may have formulated, furnished, or in any way supplied the said drawings, specifications or other data is not to be regarded by implication or otherwise as in any manner licensing the holder or any other person or corporation, or conveying any rights or permission to manufacture, use, or sell any patented invention that may in any way be related thereto.

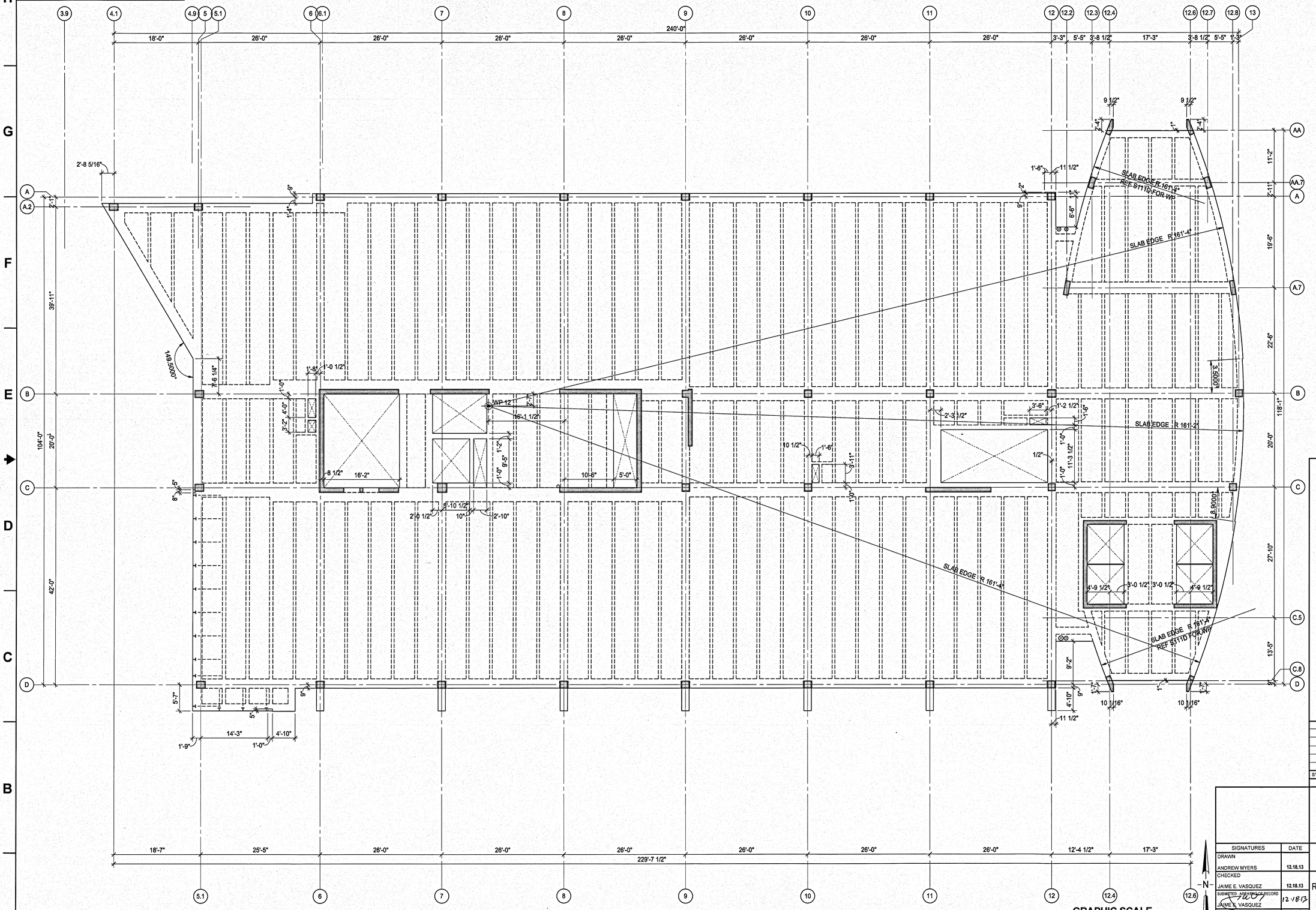

DIMENSION PLAN - 4TH LEVEL

1/8" = 1'-0"

S141D

SIGNATURES	DATE
DRAWN	
ANDREW MYERS	12.18.13
CHECKED	
JAIME E. VASQUEZ	12.18.13
SUBMITTED AND/OR AS RECORD	
JAIME E. VASQUEZ	12/18/13
ST of LICENSURE: FL	
LICENSE NO: 49103	
APPROVED	
JOSEPH M. PIES	12-18-13
BRUCE KINNAIRD	12/18/13

SYM | ZONE | DATE | APPROVED

REVISIONS

WALTER P MOORE
WALTER P. MOORE AND ASSOCIATES, INC.
300 SOUTH ORANGE AVENUE, SUITE 1100
ORLANDO, FLORIDA 32801,3382
PHONE: 407.418.2218 FAX: 407.418.2257
CERTIFICATE OF AUTHORIZATION NO. 3818
500.11025.00
JAIME E. VASQUEZ P.E. NO. 49103
TO THE BEST OF THE ENGINEER'S KNOWLEDGE, THE PLANS AND SPECIFICATIONS COMPLY WITH THE APPLICABLE MINIMUM BUILDING CODES

NATIONAL AERONAUTICS AND SPACE ADMINISTRATION
JOHN F. KENNEDY SPACE CENTER, NASA
KENNEDY SPACE CENTER, FLORIDA

KSC CENTRAL CAMPUS
REPLACEMENT HEADQUARTERS BUILDING
PHASE 1
VOL. 1 OF 4

DIMENSION PLAN - 4TH LVL - AREA 1

FILE NO.	SIZE	DWG. NO.
C-12070.00	F	79K39622 VOL 1

PCN. NO. 98745.1a | SHEET 123

KSC FORM 1-11 (3/76)(C/G 3/94)

NOTICE: When Government drawings, specifications, or other data are used for any purpose other than in connection with a definitely related Government procurement operation, the United States Government thereby incurs no responsibility nor obligation whatsoever; and the fact that the Government may have formulated, furnished, or in any way supplied the said drawings, specifications or other data is not to be regarded by implication or otherwise as in any manner licensing the holder or any other person or corporation, or conveying any rights or permission to manufacture, use, or sell any patented invention that may in any way be related thereto.

PLAN NOTES
1. CIVIL DRAWINGS ELEVATION 11.30' = DATUM ELEVATION 100'-0".
2. TYPICAL SLAB CONSTRUCTION SHALL BE NORMAL WEIGHT CONCRETE 5" THICK WITH #4@ 12" EACH WAY, CENTERED IN THE SLAB THICKNESS, UNO.
3. PROVIDE (2) #4x4'-0" ADDITIONAL SLAB REINF AT ALL RE-ENTRANT CORNERS.
4. REFER TO SHEET S215 FOR COLUMN SCHEDULES.
5. REFER TO SHEETS S202-S203 FOR SHEAR WALL ELEVATIONS.
6. REFER TO ARCHITECTURAL DRAWINGS FOR EXTENTS AND DIMENSIONS OF RAISED OR DEPRESSED SLAB AREAS, SLOPES, CURBS, AND DRAINS. REFER TO TYPICAL DETAILS FOR REINFORCEMENT REQUIREMENTS.
7. CONTRACTOR SHALL COORDINATE ALL MECHANICAL, ELECTRICAL, AND PLUMBING PENETRATIONS AND OPENINGS (INCLUDING THOSE NOT EXPLICITLY DEFINED IN THE STRUCTURAL DRAWINGS) PRIOR TO FABRICATION OF REINFORCEMENT AND CASTING OF CONCRETE.
8. FP1 SHALL BE A 7" DIAMETER WEB OPENING CENTERED IN THE DEPTH OF THE BEAM.
9. REFER TO SLAB ON GRADE PLAN FOR BALANCE OF DIMENSION INFORMATION.
10. COMPOSITE ROOF DECK SHALL BE NORMAL WEIGHT CONCRETE 3.5" THICK OVER 18 GAGE, 2" DEEP (G60) COMPOSITE METAL DECK REINFORCED WITH 6x6 - W2.1xW2.1 WWR (TOTAL SLAB THICKNESS = 5.5".
11. S1 = 6" NWT. CONCRETE SLAB REINFORCED WITH #5@12 EA. WAY TOP AND BOTTOM
12. CONNECTIONS OF COMPOSITE SLAB ROOF BEAMS TO CIP CONCRETE STRUCTURE SHALL BE MADE WITH SHORT SLOTTED HOLES PARALLEL TO THE BEAM AXIS.
13. LOW RISE STEEL FRAMING (INCLUDING CAFETERIA SHALL BE ERECTED ONLY AFTER THE TOWER ROOF FRAMING PLAN IS IN PLACE.
14. ROOF DECK SHALL BE 18 GAGE 1.5" METAL ROOF DECK.
15. AT LEVELS 3 THROUGH ROOF, ALL PAN-FORMED BEAMS BETWEEN GRIDS 5.1 AND 12 SHALL BE CAMBERED 1.0" AT MID-SPAN BETWEEN GRIDS A-B AND C-D AS SHOWN EXCEPT THAT PERIMETER BEAMS AND BEAMS CENTERED ON NUMBERED GRIDS SHALL NOT RECEIVE CAMBER. BEAMS OTHER THAN 25" IN DEPTH SHALL NOT RECEIVE CAMBER.
16. PROVIDE (2) ADDITIONAL #4 BARS WITHIN 12" OF OPENING EDGE WHERE NOTED. PROVIDE STANDARD ACI HOOK AT SHEAR WALL, AND STRAIGHT DEVELOPMENT LENGTH BEYOND EDGE OF OPENING.
17. ALL STEEL ROOF AND COMPOSITE ROOF FRAMING REACTIONS NOT INDICIATED ON PLAN SHALL BE DESIGNED FOR A MINIMUM 12 KIP ULTIMATE SHEAR REACTION AT EACH END.
18. CONTRACTOR SHALL COORDINATE ALL ELEVATOR OPENINGS, PIT DEPTHS, HOIST BEAMS AND SUPPORTS, SUMP PIT DIMENSIONS AND REQUIREMENTS WITH ELEVATOR MFR.
19. PROVIDE STD HOOK OF SLAB REINFORCEMENT CENTER IN SHEAR WALLS

FLOOR FRAMING PLAN - 5TH LEVEL
1/8" = 1'-0"

GRAPHIC SCALE
0 8 16 24
SCALE IN FEET
1/8" = 1'-0"

S151

SYM	ZONE		DATE APPROVED

REVISIONS

WALTER P MOORE
WALTER P. MOORE AND ASSOCIATES, INC.
800 SOUTH ORANGE AVENUE, SUITE 1100
ORLANDO, FLORIDA 32801.8332
PHONE: 407.418.2218 FAX: 407.416.2257
CERTIFICATE OF AUTHORIZATION NO. 3818
007-11002-00
JAIME E. VASQUEZ P.E. NO. 49103
TO THE BEST OF THE ENGINEER'S KNOWLEDGE, THE PLANS AND SPECIFICATIONS COMPLY WITH THE APPLICABLE MINIMUM BUILDING CODES

SIGNATURES	DATE
DRAWN ANDREW MYERS	12.18.13
CHECKED JAIME E. VASQUEZ	12.18.13
SUBMITTED: ARCHENG OF RECORD JAIME E. VASQUEZ	12.18.13
ST of LICENSURE-FL LICENSE NO. 49103	12.18.13
APPROVED JOSEPH M. ALES	12.18.13
BRUCE KINNAIRD	12/18/13

NATIONAL AERONAUTICS AND SPACE ADMINISTRATION
JOHN F. KENNEDY SPACE CENTER, NASA
KENNEDY SPACE CENTER, FLORIDA

KSC CENTRAL CAMPUS
REPLACEMENT HEADQUARTERS BUILDING
PHASE 1
VOL. 1 OF 4
FLOOR FRAMING PLAN - 5TH LVL
AREA 1

FILE NO.	SIZE	DWG. NO.
C-12070.00	F	79K39622 VOL 1
PCN. NO. 98745.1a		SHEET 124

KSC FORM 1-11 (3/76)(C/G 3/94)

NOTICE: When Government drawings, specifications, or other data are used for any purpose other than in connection with a definitely related Government procurement operation, the United States Government thereby incurs no responsibility nor obligation whatsoever; and the fact that the Government may have formulated, furnished, or in any way supplied the said drawings, specifications or other data is not to be regarded by implication or otherwise as in any manner licensing the holder or any other person or corporation, or conveying any rights or permission to manufacture, use, or sell any patented invention that may in any way be related thereto.

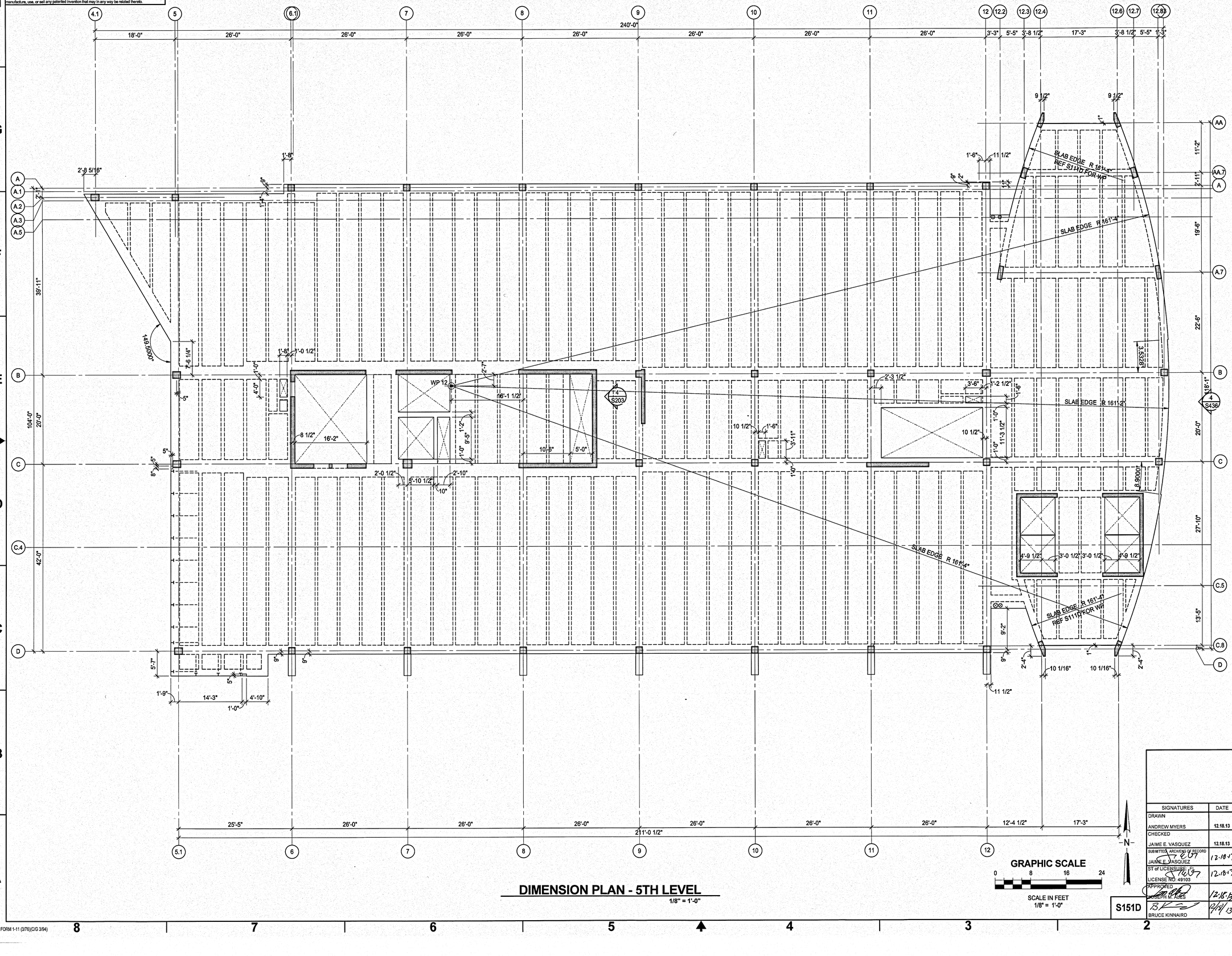

DIMENSION PLAN - 5TH LEVEL

1/8" = 1'-0"

GRAPHIC SCALE

0 8 16 24

SCALE IN FEET
1/8" = 1'-0"

S151D

SIGNATURES	DATE
DRAWN ANDREW MYERS	12.18.13
CHECKED JAIME E. VASQUEZ	12.18.13
SUBMITTED, ARCHENG OF RECORD JAIME E. VASQUEZ	12.18.13
ST of LICENSURE: FL LICENSE NO. 49103	12.18.13
APPROVED JOSEPH M. ALES	12.18.13
BRUCE KINNAIRD	12/19/13

REVISIONS

SYM | ZONE | DATE APPROVED

WALTER P MOORE
WALTER P. MOORE AND ASSOCIATES, INC.
300 SOUTH ORANGE AVENUE, SUITE 1100
ORLANDO, FLORIDA 32801.3332
PHONE: 407.418.2218 FAX: 407.418.2267
CERTIFICATE OF AUTHORIZATION NO. 3816
EDC-1025-00
JAIME E. VASQUEZ P.E. NO. 49103
TO THE BEST OF THE ENGINEER'S KNOWLEDGE, THE PLANS AND SPECIFICATIONS COMPLY WITH THE APPLICABLE MINIMUM BUILDING CODES

NATIONAL AERONAUTICS AND SPACE ADMINISTRATION
JOHN F. KENNEDY SPACE CENTER, NASA
KENNEDY SPACE CENTER, FLORIDA

KSC CENTRAL CAMPUS
REPLACEMENT HEADQUARTERS BUILDING
PHASE 1
VOL. 1 OF 4

DIMENSION PLAN - 5TH LVL - AREA 1

FILE NO.	SIZE	DWG. NO.
C-12070.00	F	79K39622 VOL 1
PCN. NO. 98745.1a		SHEET 125

KSC FORM 1-11 (3/76)(C/G 3/94)

NOTICE: When Government drawings, specifications, or other data are used for any purpose other than in connection with a definitely related Government procurement operation, the United States Government thereby incurs no responsibility nor obligation whatsoever; and the fact that the Government may have formulated, furnished, or in any way supplied the said drawings, specifications or other data is not to be regarded by implication or otherwise as in any manner licensing the holder or any other person or corporation, or conveying any rights or permission to manufacture, use, or sell any patented invention that may in any way be related thereto.

PLAN NOTES

1. CIVIL DRAWINGS ELEVATION 11.30' = DATUM ELEVATION 100'-0".
2. TYPICAL SLAB CONSTRUCTION SHALL BE NORMAL WEIGHT CONCRETE 5" THICK WITH #4@ 12" EACH WAY, CENTERED IN THE SLAB THICKNESS, UNO.
3. PROVIDE (2) #4x4'-0" ADDITIONAL SLAB REINF AT ALL RE-ENTRANT CORNERS.
4. REFER TO SHEET S215 FOR COLUMN SCHEDULES.
5. REFER TO SHEETS S202-S203 FOR SHEAR WALL ELEVATIONS.
6. REFER TO ARCHITECTURAL DRAWINGS FOR EXTENTS AND DIMENSIONS OF RAISED OR DEPRESSED SLAB AREAS, SLOPES, CURBS, AND DRAINS. REFER TO TYPICAL DETAILS FOR REINFORCEMENT REQUIREMENTS.
7. CONTRACTOR SHALL COORDINATE ALL MECHANICAL, ELECTRICAL, AND PLUMBING PENETRATIONS AND OPENINGS (INCLUDING THOSE NOT EXPLICITLY DEFINED IN THE STRUCTURAL DRAWINGS) PRIOR TO FABRICATION OF REINFORCEMENT AND CASTING OF CONCRETE.
8. FP1 SHALL BE A 7" DIAMETER WEB OPENING CENTERED IN THE DEPTH OF THE BEAM.
9. REFER TO SLAB ON GRADE PLAN FOR BALANCE OF DIMENSION INFORMATION.
10. COMPOSITE ROOF DECK SHALL BE NORMAL WEIGHT CONCRETE 3.5" THICK OVER 18 GAGE, 2" DEEP (C60) COMPOSITE METAL DECK REINFORCED WITH 6x6 - W2.1xW2.1 WWR (TOTAL SLAB THICKNESS = 5.5".
11. S1 = 6" NWT. CONCRETE SLAB REINFORCED WITH #5@12 EA. WAY TOP AND BOTTOM
12. CONNECTIONS OF COMPOSITE SLAB ROOF BEAMS TO CIP CONCRETE STRUCTURE SHALL BE MADE WITH SHORT SLOTTED HOLES PARALLEL TO THE BEAM AXIS.
13. LOW RISE STEEL FRAMING (INCLUDING CAFETERIA SHALL BE ERECTED ONLY AFTER THE TOWER ROOF FRAMING PLAN IS IN PLACE.
14. ROOF DECK SHALL BE 18 GAGE 1.5" METAL ROOF DECK.
15. AT LEVELS 3 THROUGH ROOF, ALL PAN-FORMED BEAMS BETWEEN GRIDS 5.1 AND 12 SHALL BE CAMBERED 1.0" AT MID-SPAN BETWEEN GRIDS A-B AND C-D AS SHOWN EXCEPT THAT PERIMETER BEAMS AND BEAMS CENTERED ON NUMBERED GRIDS SHALL NOT RECEIVE CAMBER. BEAMS OTHER THAN 25" IN DEPTH SHALL NOT RECEIVE CAMBER.
16. PROVIDE (2) ADDITIONAL #4 BARS WITHIN 12" OF OPENING EDGE WHERE NOTED. PROVIDE STANDARD ACI HOOK AT SHEAR WALL, AND STRAIGHT DEVELOPMENT LENGTH BEYOND EDGE OF OPENING.
17. ALL STEEL ROOF AND COMPOSITE ROOF FRAMING REACTIONS NOT INDICATED ON PLAN SHALL BE DESIGNED FOR A MINIMUM 12 KIP ULTIMATE SHEAR REACTION AT EACH END.
18. CONTRACTOR SHALL COORDINATE ALL ELEVATOR OPENINGS, PIT DEPTHS, HOIST BEAMS AND SUPPORTS, SUMP PIT DIMENSIONS AND REQUIREMENTS WITH ELEVATOR MFR.
19. PROVIDE STD HOOK OF SLAB REINFORCEMENT CENTER IN SHEAR WALLS

FLOOR FRAMING PLAN - 6TH LEVEL

1/8" = 1'-0"

GRAPHIC SCALE
0 8 16 24
SCALE IN FEET
1/8" = 1'-0"

N

S161

SYM	ZONE		DATE	APPROVED

REVISIONS

WALTER P MOORE
WALTER P. MOORE AND ASSOCIATES, INC.
300 SOUTH ORANGE AVENUE, SUITE 1100
ORLANDO, FLORIDA 32801.3592
PHONE: 407.418.2218 FAX: 407.418.2257
CERTIFICATE OF AUTHORIZATION NO. 3818
807-1203.00
JAIME E. VASQUEZ P.E. NO. 49103
TO THE BEST OF THE ENGINEER'S KNOWLEDGE, THE PLANS AND SPECIFICATIONS COMPLY WITH THE APPLICABLE MINIMUM BUILDING CODES

SIGNATURES	DATE
DRAWN ANDREW MYERS	12.18.13
CHECKED JAIME E. VASQUEZ	12.18.13
SUBMITTED, ARCHIVING OF RECORD JAIME E. VASQUEZ	12.18.13
ST of LICENSURE, FL LICENSE NO: 49103	12.18.13
APPROVED JOSEPH M. PLISE	12.18.13
BRUCE KINNAIRD	12/18/13

NATIONAL AERONAUTICS AND SPACE ADMINISTRATION
JOHN F. KENNEDY SPACE CENTER, NASA
KENNEDY SPACE CENTER, FLORIDA

KSC CENTRAL CAMPUS
REPLACEMENT HEADQUARTERS BUILDING
PHASE 1
VOL. 1 OF 4
FLOOR FRAMING PLAN - 6TH LVL
AREA 1

FILE NO.	SIZE	DWG. NO.
C-12070.00	F	79K39622 VOL 1
PCN. NO. 98745.1a		SHEET 126

NOTICE: When Government drawings, specifications, or other data are used for any purpose other than in connection with a definitely related Government procurement operation, the United States Government thereby incurs no responsibility nor obligation whatsoever; and the fact that the Government may have formulated, furnished, or in any way supplied the said drawings, specifications or other data is not to be regarded by implication or otherwise as in any manner licensing the holder or any other person or corporation, or conveying any rights or permission to manufacture, use, or sell any patented invention that may in any way be related thereto.

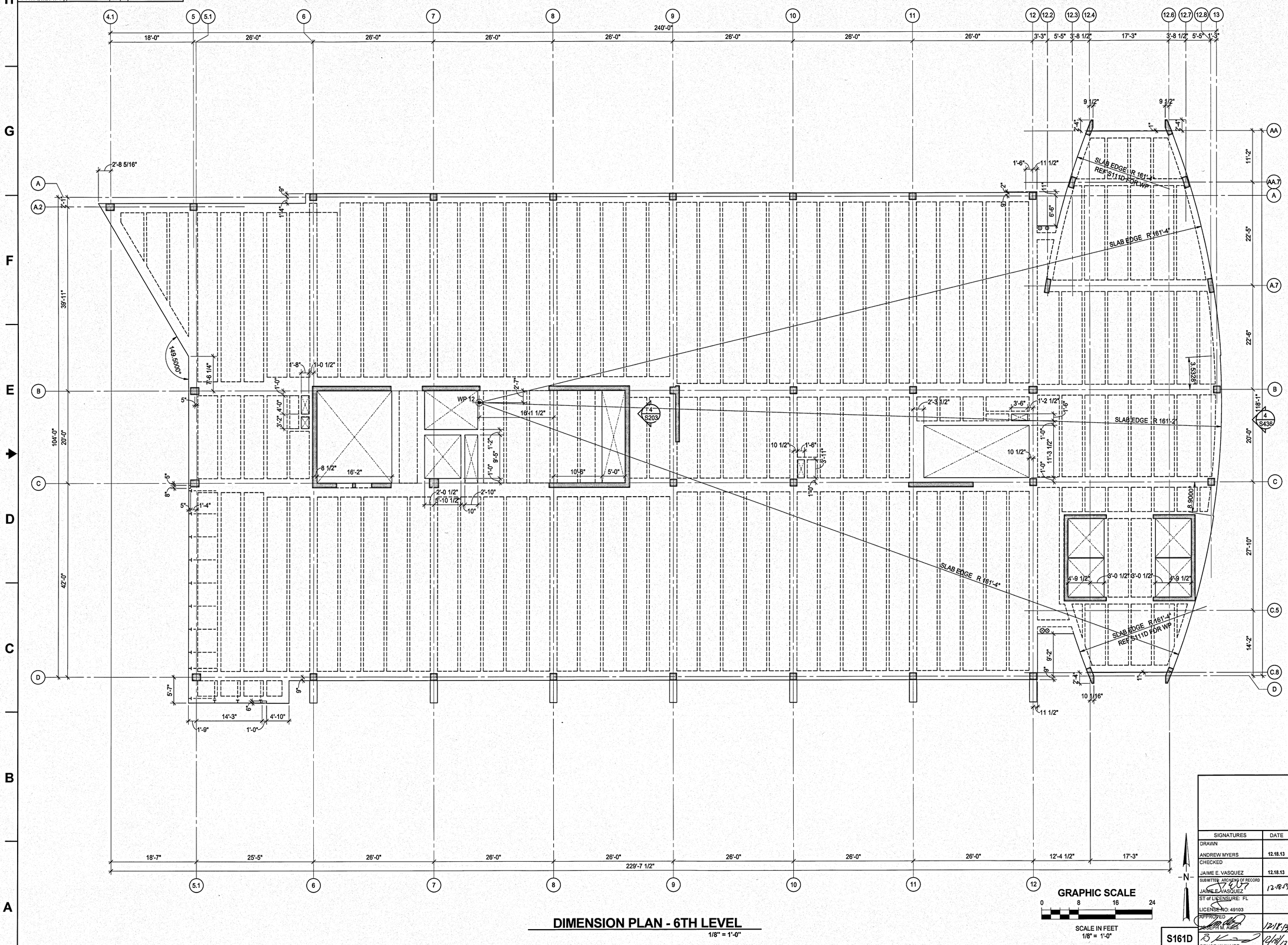

DIMENSION PLAN - 6TH LEVEL

1/8" = 1'-0"

GRAPHIC SCALE

0 8 16 24

SCALE IN FEET
1/8" = 1'-0"

N

S161D

SYM	ZONE		DATE	APPROVED

REVISIONS

WALTER P MOORE
WALTER P. MOORE AND ASSOCIATES, INC.
500 SOUTH ORANGE AVENUE, SUITE 1100
ORLANDO, FLORIDA 32801.3332
PHONE: 407.418.2218 FAX: 407.418.2257
CERTIFICATE OF AUTHORIZATION NO. 3616
607-1102/552
JAIME E. VASQUEZ P.E. NO. 49103
TO THE BEST OF THE ENGINEER'S KNOWLEDGE, THE PLANS AND SPECIFICATIONS COMPLY WITH THE APPLICABLE MINIMUM BUILDING CODES

SIGNATURES	DATE
DRAWN ANDREW MYERS	12.18.13
CHECKED JAIME E. VASQUEZ	12.18.13
SUBMITTED: ARCHIENG OF RECORD JAIME E. VASQUEZ	12-18-13
ST of LICENSURE: FL LICENSE NO. 49103	
APPROVED JOSEPH M. JUGS	12/18/13
BRUCE KINNAIRD	12/18/13

NATIONAL AERONAUTICS AND SPACE ADMINISTRATION
JOHN F. KENNEDY SPACE CENTER, NASA
KENNEDY SPACE CENTER, FLORIDA

KSC CENTRAL CAMPUS
REPLACEMENT HEADQUARTERS BUILDING
PHASE 1
VOL. 1 OF 4

DIMENSION PLAN - 6TH LVL - AREA 1

FILE NO.	SIZE	DWG. NO.
C-12070.00	F	79K39622 VOL 1

PCN. NO. 98745.1a SHEET 127

KSC FORM 1-11 (3/76)(C/G 3/94)

NOTICE: When Government drawings, specifications, or other data are used for any purpose other than in connection with a definitely related Government procurement operation, the United States Government thereby incurs no responsibility nor obligation whatsoever; and the fact that the Government may have formulated, furnished, or in any way supplied the said drawings, specifications or other data is not to be regarded by implication or otherwise as in any manner licensing the holder or any other person or corporation, or conveying any rights or permission to manufacture, use, or sell any patented invention that may in any way be related thereto.

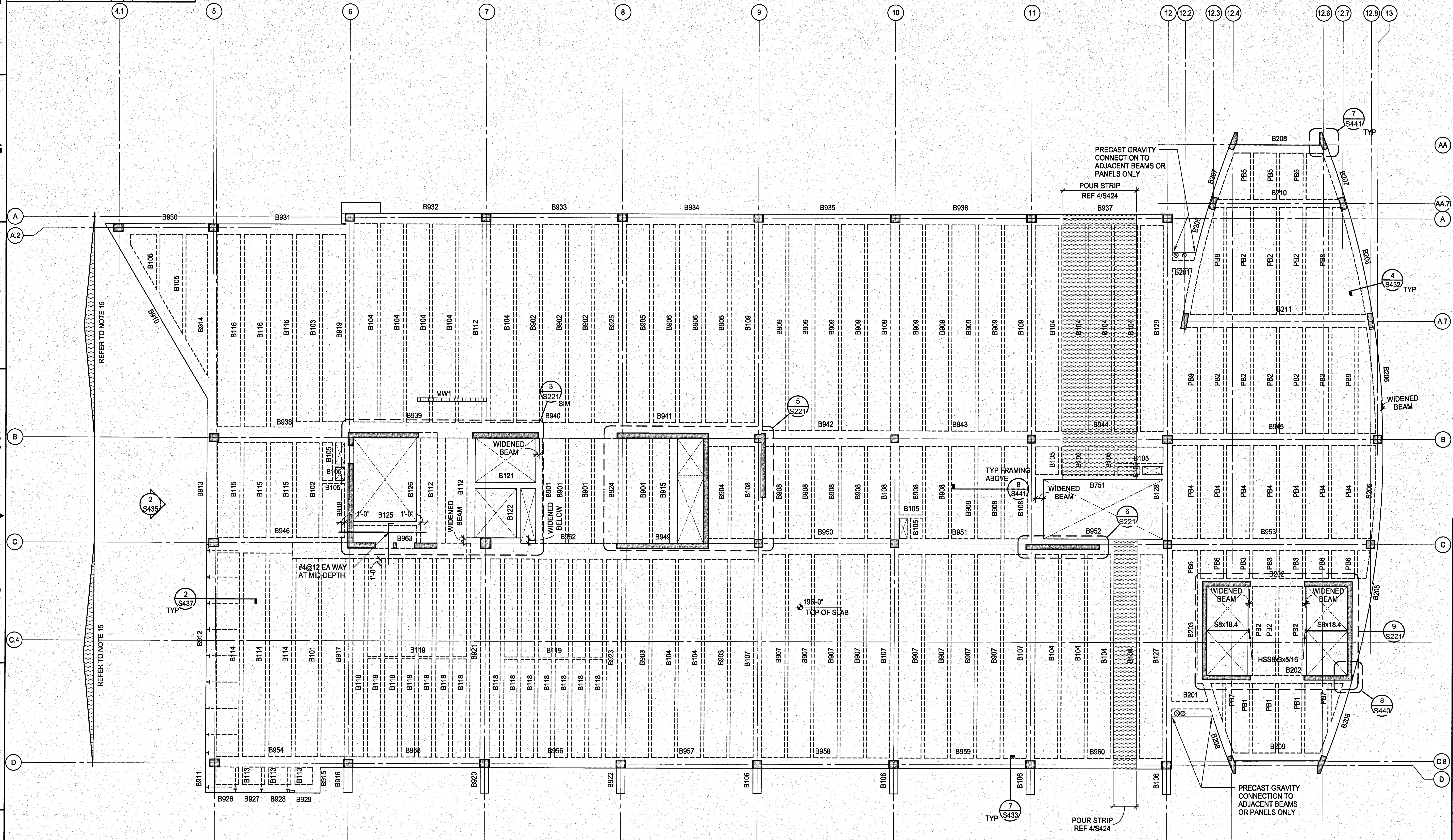

FLOOR FRAMING PLAN - 7TH LEVEL

1/8" = 1'-0"

GRAPHIC SCALE

0 8 16 24

SCALE IN FEET
1/8" = 1'-0"

PLAN NOTES

1. CIVIL DRAWINGS ELEVATION 11.30' = DATUM ELEVATION 100'-0".
2. TYPICAL SLAB CONSTRUCTION SHALL BE NORMAL WEIGHT CONCRETE 5" THICK WITH #4@ 12" EACH WAY, CENTERED IN THE SLAB THICKNESS, UNO.
3. PROVIDE (2) #4x4'-0" ADDITIONAL SLAB REINF AT ALL RE-ENTRANT CORNERS.
4. REFER TO SHEET S215 FOR COLUMN SCHEDULES.
5. REFER TO SHEETS S202-S203 FOR SHEAR WALL ELEVATIONS.
6. REFER TO ARCHITECTURAL DRAWINGS FOR EXTENTS AND DIMENSIONS OF RAISED OR DEPRESSED SLAB AREAS, SLOPES, CURBS, AND DRAINS. REFER TO TYPICAL DETAILS FOR REINFORCEMENT REQUIREMENTS.
7. CONTRACTOR SHALL COORDINATE ALL MECHANICAL, ELECTRICAL, AND PLUMBING PENETRATIONS AND OPENINGS (INCLUDING THOSE NOT EXPLICITLY DEFINED IN THE STRUCTURAL DRAWINGS) PRIOR TO FABRICATION OF REINFORCEMENT AND CASTING OF CONCRETE.
8. FP1 SHALL BE A 7" DIAMETER WEB OPENING CENTERED IN THE DEPTH OF THE BEAM.
9. REFER TO SLAB ON GRADE PLAN FOR BALANCE OF DIMENSION INFORMATION.
10. COMPOSITE ROOF DECK SHALL BE NORMAL WEIGHT CONCRETE 3.5" THICK OVER 18 GAGE, 2" DEEP (G60) COMPOSITE METAL DECK REINFORCED WITH 6x6 - W2.1xW2.1 WWR (TOTAL SLAB THICKNESS = 5.5".
11. S1 = 6" NWT. CONCRETE SLAB REINFORCED WITH #5@12 EA. WAY TOP AND BOTTOM
12. CONNECTIONS OF COMPOSITE SLAB ROOF BEAMS TO CIP CONCRETE STRUCTURE SHALL BE MADE WITH SHORT SLOTTED HOLES PARALLEL TO THE BEAM AXIS.
13. LOW RISE STEEL FRAMING (INCLUDING CAFETERIA SHALL BE ERECTED ONLY AFTER THE TOWER ROOF FRAMING PLAN IS IN PLACE.
14. ROOF DECK SHALL BE 18 GAGE 1.5" METAL ROOF DECK.
15. AT LEVELS 3 THROUGH ROOF, ALL PAN-FORMED BEAMS BETWEEN GRIDS 5.1 AND 12 SHALL BE CAMBERED 1.0" AT MID-SPAN BETWEEN GRIDS A-B AND C-D AS SHOWN EXCEPT THAT PERIMETER BEAMS AND BEAMS CENTERED ON NUMBERED GRIDS SHALL NOT RECEIVE CAMBER. BEAMS OTHER THAN 25" IN DEPTH SHALL NOT RECEIVE CAMBER.
16. PROVIDE (2) ADDITIONAL #4 BARS WITHIN 12" OF OPENING EDGE WHERE NOTED. PROVIDE STANDARD ACI HOOK AT SHEAR WALL, AND STRAIGHT DEVELOPMENT LENGTH BEYOND EDGE OF OPENING.
17. ALL STEEL ROOF AND COMPOSITE ROOF FRAMING REACTIONS NOT INDICIATED ON PLAN SHALL BE DESIGNED FOR A MINIMUM 12 KIP ULTIMATE SHEAR REACTION AT EACH END.
18. CONTRACTOR SHALL COORDINATE ALL ELEVATOR OPENINGS, PIT DEPTHS, HOIST BEAMS AND SUPPORTS, SUMP PIT DIMENSIONS AND REQUIREMENTS WITH ELEVATOR MFR.
19. PROVIDE STD HOOK OF SLAB REINFORCEMENT CENTER IN SHEAR WALLS

SYM	ZONE		DATE	APPROVED

REVISIONS

WALTER P MOORE
WALTER P. MOORE AND ASSOCIATES, INC.
300 SOUTH ORANGE AVENUE, SUITE 1150
ORLANDO, FLORIDA 32801.3332
PHONE: 407.418.2218 FAX: 407.418.2257
CERTIFICATE OF AUTHORIZATION NO. 3818
S07-11023-00
JAIME E. VASQUEZ P.E. NO. 49103
TO THE BEST OF THE ENGINEER'S KNOWLEDGE, THE PLANS AND SPECIFICATIONS COMPLY WITH THE APPLICABLE MINIMUM BUILDING CODES

SIGNATURES	DATE
DRAWN ANDREW MYERS	12.18.13
CHECKED JAIME E. VASQUEZ	12.18.13
SUBMITTED: ARCH/ENG OF RECORD JAIME E. VASQUEZ	
ST of LICENSURE: FL LICENSE NO: 49103	
APPROVED JOSEPH M. ALES	
BRUCE KINNAIRD	

NATIONAL AERONAUTICS AND SPACE ADMINISTRATION
JOHN F. KENNEDY SPACE CENTER, NASA
KENNEDY SPACE CENTER, FLORIDA

KSC CENTRAL CAMPUS
REPLACEMENT HEADQUARTERS BUILDING
PHASE 1
VOL. 1 OF 4
FLOOR FRAMING PLAN - 7TH LVL AREA 1

FILE NO.	SIZE	DWG. NO.
C-12070.00	F	79K39622 VOL 1

PCN. NO. 98745.1a SHEET 128

S171

NOTICE: When Government drawings, specifications, or other data are used for any purpose other than in connection with a definitely related Government procurement operation, the United States Government thereby incurs no responsibility nor obligation whatsoever; and the fact that the Government may have formulated, furnished, or in any way supplied the said drawings, specifications or other data is not to be regarded by implication or otherwise as in any manner licensing the holder or any other person or corporation, or conveying any rights or permission to manufacture, use, or sell any patented invention that may in any way be related thereto.

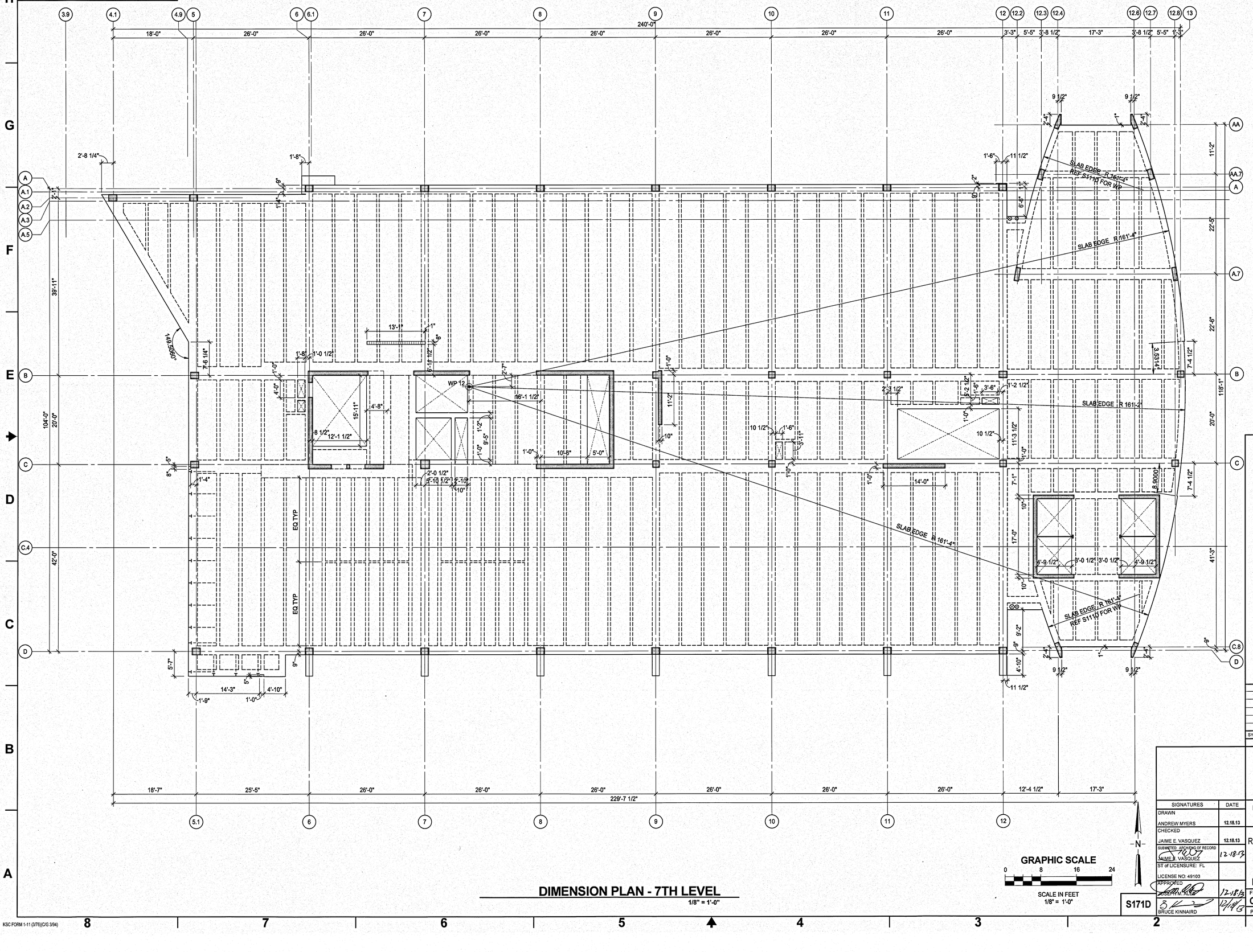

DIMENSION PLAN - 7TH LEVEL

1/8" = 1'-0"

KSC FORM 1-11 (3/76)(C/G 3/94)

SYM	ZONE		DATE	APPROVED
		REVISIONS		

WALTER P MOORE
WALTER P. MOORE AND ASSOCIATES, INC.
800 SOUTH ORANGE AVENUE, SUITE 1100
ORLANDO, FLORIDA 32801.3532
PHONE: 407.418.2218 FAX: 407.418.2257
CERTIFICATE OF AUTHORIZATION NO. 3818
807-11003-00
JAIME E. VASQUEZ P.E. NO. 49103
TO THE BEST OF THE ENGINEERS KNOWLEDGE, THE PLANS AND SPECIFICATIONS COMPLY WITH THE APPLICABLE MINIMUM BUILDING CODES

SIGNATURES	DATE
DRAWN	
ANDREW MYERS	12.18.13
CHECKED	
JAIME E. VASQUEZ	12.18.13
SUBMITTED, ARCHITECT OF RECORD	
JAIME E. VASQUEZ	12.18.13
ST of LICENSURE: FL	
LICENSE NO: 49103	
APPROVED	
[illegible]	12.18.13
BRUCE KINNAIRD	12/18/13

NATIONAL AERONAUTICS AND SPACE ADMINISTRATION
JOHN F. KENNEDY SPACE CENTER, NASA
KENNEDY SPACE CENTER, FLORIDA

KSC CENTRAL CAMPUS
REPLACEMENT HEADQUARTERS BUILDING
PHASE 1
VOL. 1 OF 4

DIMENSION PLAN - 7TH LVL - AREA 1

FILE NO.	SIZE	DWG. NO.	
C-12070.00	F	79K39622 VOL 1	
PCN. NO. 98745.1a		SHEET 129	

S171D

NOTICE: When Government drawings, specifications, or other data are used for any purpose other than in connection with a definitely related Government procurement operation, the United States Government thereby incurs no responsibility nor obligation whatsoever; and the fact that the Government may have formulated, furnished, or in any way supplied the said drawings, specifications or other data is not to be regarded by implication or otherwise as in any manner licensing the holder or any other person or corporation, or conveying any rights or permission to manufacture, use, or sell any patented invention that may in any way be related thereto.

PLAN NOTES

1. CIVIL DRAWINGS ELEVATION 11.30' = DATUM ELEVATION 100'-0".
2. TYPICAL SLAB CONSTRUCTION SHALL BE NORMAL WEIGHT CONCRETE 5" THICK WITH #4@ 12" EACH WAY, CENTERED IN THE SLAB THICKNESS, UNO.
3. PROVIDE (2) #4x4'-0" ADDITIONAL SLAB REINF AT ALL RE-ENTRANT CORNERS.
4. REFER TO SHEET S215 FOR COLUMN SCHEDULES.
5. REFER TO SHEETS S202-S203 FOR SHEAR WALL ELEVATIONS.
6. REFER TO ARCHITECTURAL DRAWINGS FOR EXTENTS AND DIMENSIONS OF RAISED OR DEPRESSED SLAB AREAS, SLOPES, CURBS, AND DRAINS. REFER TO TYPICAL DETAILS FOR REINFORCEMENT REQUIREMENTS.
7. CONTRACTOR SHALL COORDINATE ALL MECHANICAL, ELECTRICAL, AND PLUMBING PENETRATIONS AND OPENINGS (INCLUDING THOSE NOT EXPLICITLY DEFINED IN THE STRUCTURAL DRAWINGS) PRIOR TO FABRICATION OF REINFORCEMENT AND CASTING OF CONCRETE.
8. FP1 SHALL BE A 7" DIAMETER WEB OPENING CENTERED IN THE DEPTH OF THE BEAM.
9. REFER TO SLAB ON GRADE PLAN FOR BALANCE OF DIMENSION INFORMATION.
10. COMPOSITE ROOF DECK SHALL BE NORMAL WEIGHT CONCRETE 3.5" THICK OVER 18 GAGE, 2" DEEP (G60) COMPOSITE METAL DECK REINFORCED WITH 6x6 - W2.1xW2.1 WWR (TOTAL SLAB THICKNESS = 5.5".
11. S1 = 6" NWT. CONCRETE SLAB REINFORCED WITH #5@12 EA. WAY TOP AND BOTTOM
12. CONNECTIONS OF COMPOSITE SLAB ROOF BEAMS TO CIP CONCRETE STRUCTURE SHALL BE MADE WITH SHORT SLOTTED HOLES PARALLEL TO THE BEAM AXIS.
13. LOW RISE STEEL FRAMING (INCLUDING CAFETERIA SHALL BE ERECTED ONLY AFTER THE TOWER ROOF FRAMING PLAN IS IN PLACE.
14. ROOF DECK SHALL BE 18 GAGE 1.5" METAL ROOF DECK.
15. AT LEVELS 3 THROUGH ROOF, ALL PAN-FORMED BEAMS BETWEEN GRIDS 5.1 AND 12 SHALL BE CAMBERED 1.0" AT MID-SPAN BETWEEN GRIDS A-B AND C-D AS SHOWN EXCEPT THAT PERIMETER BEAMS AND BEAMS CENTERED ON NUMBERED GRIDS SHALL NOT RECEIVE CAMBER. BEAMS OTHER THAN 25" IN DEPTH SHALL NOT RECEIVE CAMBER.
16. PROVIDE (2) ADDITIONAL #4 BARS WITHIN 12" OF OPENING EDGE WHERE NOTED. PROVIDE STANDARD ACI HOOK AT SHEAR WALL, AND STRAIGHT DEVELOPMENT LENGTH BEYOND EDGE OF OPENING.
17. ALL STEEL ROOF AND COMPOSITE ROOF FRAMING REACTIONS NOT INDICIATED ON PLAN SHALL BE DESIGNED FOR A MINIMUM 12 KIP ULTIMATE SHEAR REACTION AT EACH END.
18. CONTRACTOR SHALL COORDINATE ALL ELEVATOR OPENINGS, PIT DEPTHS, HOIST BEAMS AND SUPPORTS, SUMP PIT DIMENSIONS AND REQUIREMENTS WITH ELEVATOR MFR.
19. PROVIDE STD HOOK OF SLAB REINFORCEMENT CENTER IN SHEAR WALLS

WEST STAIR PRESSURIZATION PARTIAL PLAN

1/8" = 1'-0"

ROOF FRAMING PLAN

1/8" = 1'-0"

GRAPHIC SCALE
0 8 16 24
SCALE IN FEET
1/8" = 1'-0"

SYM	ZONE		DATE	APPROVED

REVISIONS

WALTER P MOORE
WALTER P. MOORE AND ASSOCIATES, INC.
300 SOUTH ORANGE AVENUE, SUITE 1100
ORLANDO, FLORIDA 32801.3332
PHONE: 407.418.2218 FAX: 407.418.2257
CERTIFICATE OF AUTHORIZATION NO. 3818
807-11005-00
JAIME E. VASQUEZ P.E. NO. 49103
TO THE BEST OF THE ENGINEERS KNOWLEDGE, THE PLANS AND SPECIFICATIONS COMPLY WITH THE APPLICABLE MINIMUM BUILDING CODES

SIGNATURES	DATE
DRAWN ANDREW MYERS	12.18.13
CHECKED JAIME E. VASQUEZ	12.18.13
SUBMITTED: ARCHENG OF RECORD JAIME E. VASQUEZ ST of LICENSURE: FL LICENSE NO: 49103	12.18.13
APPROVED JOSEPH M. AKES	12.18.13
BRUCE KINNAIRD	12/18/13

NATIONAL AERONAUTICS AND SPACE ADMINISTRATION
JOHN F. KENNEDY SPACE CENTER, NASA
KENNEDY SPACE CENTER, FLORIDA

KSC CENTRAL CAMPUS
REPLACEMENT HEADQUARTERS BUILDING
PHASE 1
VOL. 1 OF 4

ROOF FRAMING PLAN - AREA 1

FILE NO.	SIZE	DWG. NO.
C-12070.00	F	79K39622 VOL 1
PCN. NO. 98745.1a		SHEET 130

S181

KSC FORM 1-11 (3/76)(C/G 3/94)

NOTICE: When Government drawings, specifications, or other data are used for any purpose other than in connection with a definitely related Government procurement operation, the United States Government thereby incurs no responsibility nor obligation whatsoever; and the fact that the Government may have formulated, furnished, or in any way supplied the said drawings, specifications or other data is not to be regarded by implication or otherwise as in any manner licensing the holder or any other person or corporation, or conveying any rights or permission to manufacture, use, or sell any patented invention that may in any way be related thereto.

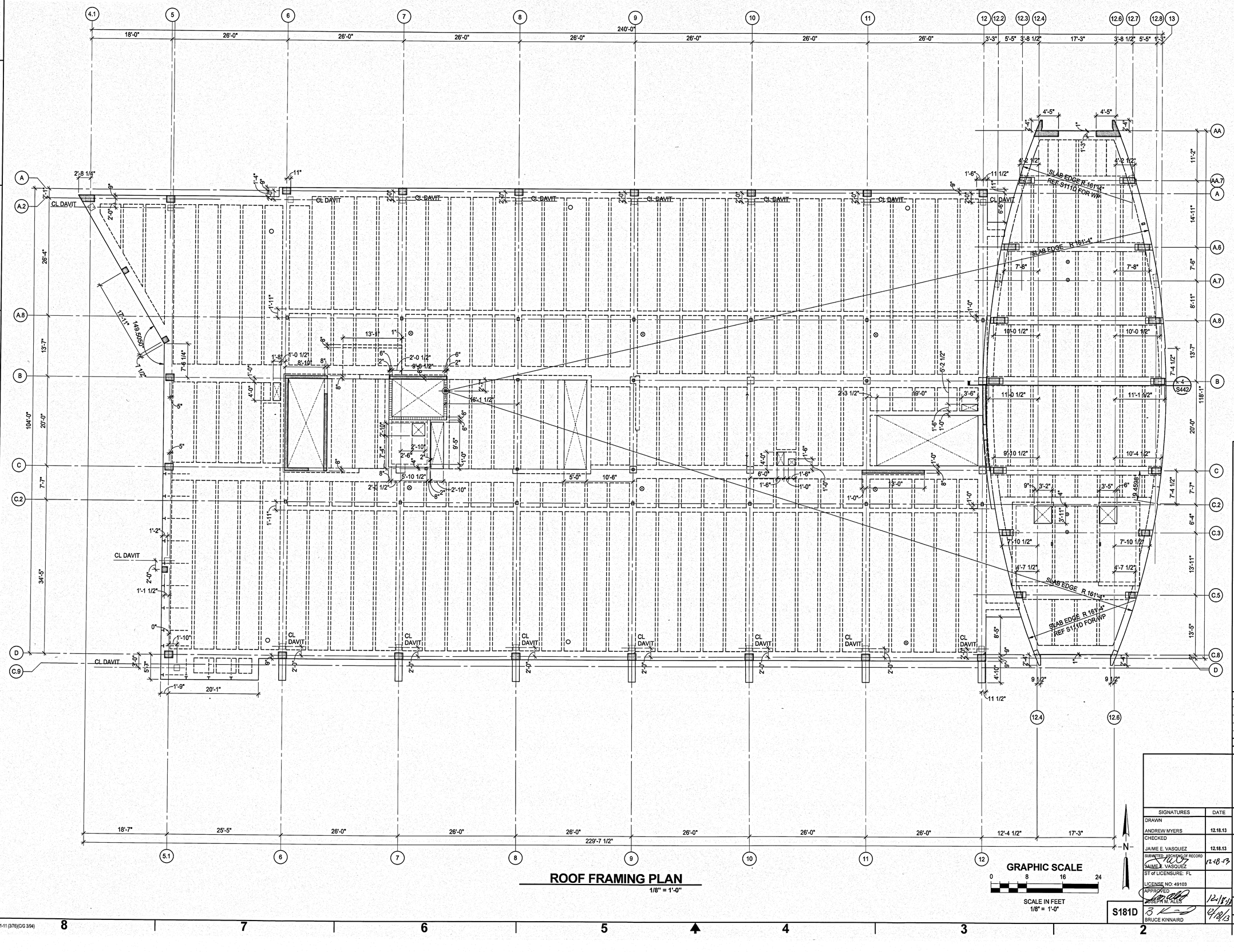

ROOF FRAMING PLAN
1/8" = 1'-0"

S181D

SIGNATURES	DATE
DRAWN ANDREW MYERS	12.18.13
CHECKED JAIME E. VASQUEZ	12.18.13
SUBMITTED - ARCHIVES OF RECORD JAIME E. VASQUEZ	12.18.13
ST of LICENSURE: FL LICENSE NO: 49103	
APPROVED JOSEPH M. ALES	12/18/13
BRUCE KINNAIRD	4/18/13

SYM	ZONE		DATE APPROVED
REVISIONS			

WALTER P MOORE
WALTER P. MOORE AND ASSOCIATES, INC.
800 SOUTH ORANGE AVENUE, SUITE 1160
ORLANDO, FLORIDA 32801.3532
PHONE: 407.418.2218 FAX: 407.418.2257
CERTIFICATE OF AUTHORIZATION NO. 3818
007-11003-00
JAIME E. VASQUEZ P.E. NO. 49103
TO THE BEST OF THE ENGINEERS KNOWLEDGE, THE PLANS AND SPECIFICATIONS COMPLY WITH THE APPLICABLE MINIMUM BUILDING CODES

NATIONAL AERONAUTICS AND SPACE ADMINISTRATION
JOHN F. KENNEDY SPACE CENTER, NASA
KENNEDY SPACE CENTER, FLORIDA

KSC CENTRAL CAMPUS
REPLACEMENT HEADQUARTERS BUILDING
PHASE 1
VOL. 1 OF 4
DIMENSION PLAN - ROOF FRAMING PLAN - AREA 1

FILE NO.	SIZE	DWG. NO.
C-12070.00	F	79K39622 VOL 1
PCN. NO. 98745.1a		SHEET 131

KSC FORM 1-11 (3/76)(C/G 3/94)

NOTICE: When Government drawings, specifications, or other data are used for any purpose other than in connection with a definitely related Government procurement operation, the United States Government thereby incurs no responsibility nor obligation whatsoever; and the fact that the Government may have formulated, furnished, or in any way supplied the said drawings, specifications or other data is not to be regarded by implication or otherwise as in any manner licensing the holder or any other person or corporation, or conveying any rights or permission to manufacture, use, or sell any patented invention that may in any way be related thereto.

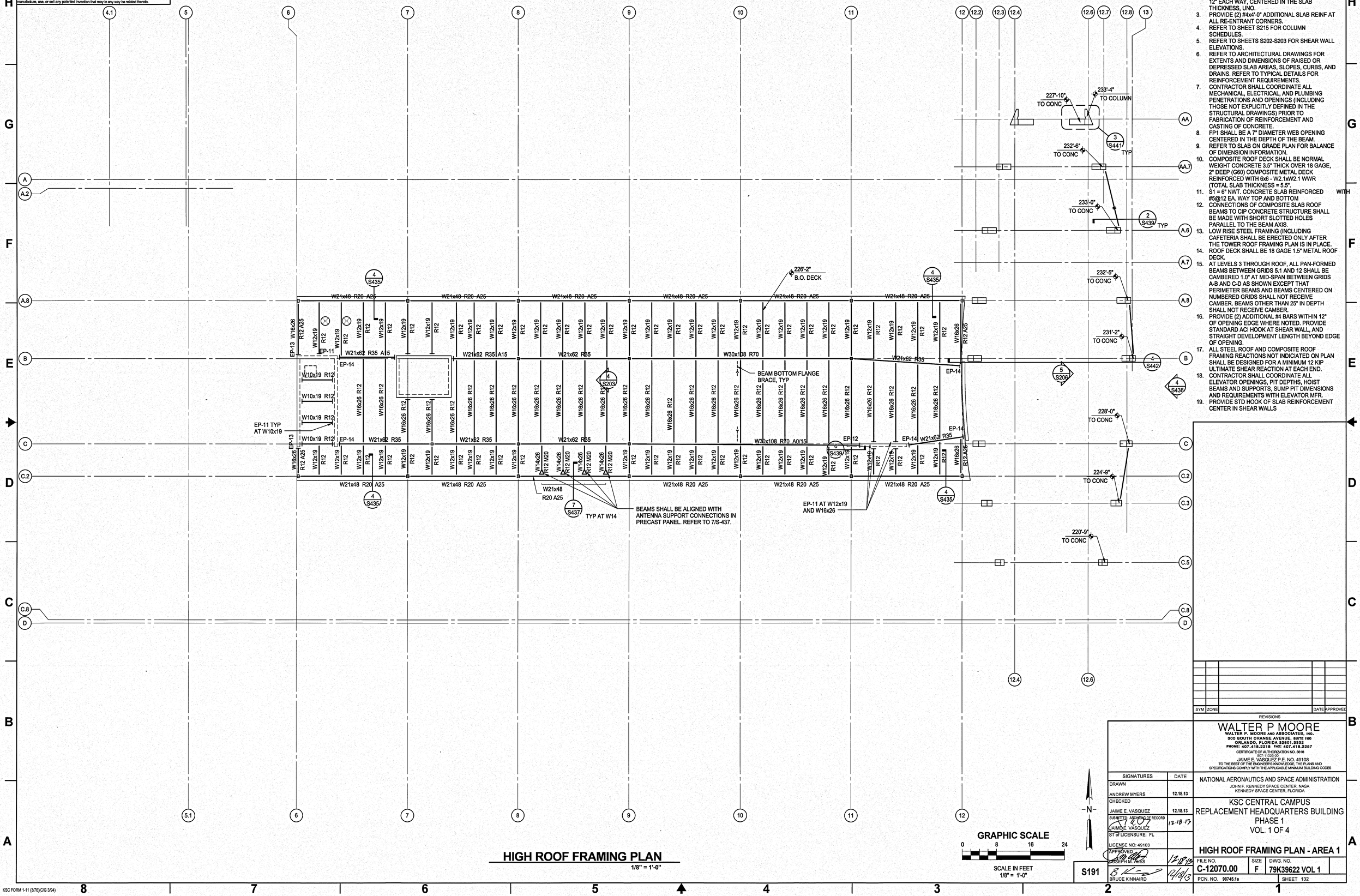

HIGH ROOF FRAMING PLAN
1/8" = 1'-0"

PLAN NOTES
1. CIVIL DRAWINGS ELEVATION 11.30' = DATUM ELEVATION 100'-0".
2. TYPICAL SLAB CONSTRUCTION SHALL BE NORMAL WEIGHT CONCRETE 5" THICK WITH #4@ 12" EACH WAY, CENTERED IN THE SLAB THICKNESS, UNO.
3. PROVIDE (2) #4x4'-0" ADDITIONAL SLAB REINF AT ALL RE-ENTRANT CORNERS.
4. REFER TO SHEET S215 FOR COLUMN SCHEDULES.
5. REFER TO SHEETS S202-S203 FOR SHEAR WALL ELEVATIONS.
6. REFER TO ARCHITECTURAL DRAWINGS FOR EXTENTS AND DIMENSIONS OF RAISED OR DEPRESSED SLAB AREAS, SLOPES, CURBS, AND DRAINS. REFER TO TYPICAL DETAILS FOR REINFORCEMENT REQUIREMENTS.
7. CONTRACTOR SHALL COORDINATE ALL MECHANICAL, ELECTRICAL AND PLUMBING PENETRATIONS AND OPENINGS (INCLUDING THOSE NOT EXPLICITLY DEFINED IN THE STRUCTURAL DRAWINGS) PRIOR TO FABRICATION OF REINFORCEMENT AND CASTING OF CONCRETE.
8. FP1 SHALL BE A 7" DIAMETER WEB OPENING CENTERED IN THE DEPTH OF THE BEAM.
9. REFER TO SLAB ON GRADE PLAN FOR BALANCE OF DIMENSION INFORMATION.
10. COMPOSITE ROOF DECK SHALL BE NORMAL WEIGHT CONCRETE 3.5" THICK OVER 18 GAGE, 2" DEEP (G60) COMPOSITE METAL DECK REINFORCED WITH 6x6 - W2.1xW2.1 WWR (TOTAL SLAB THICKNESS = 5.5".
11. S1 = 6" NWT. CONCRETE SLAB REINFORCED WITH #5@12 EA. WAY TOP AND BOTTOM
12. CONNECTIONS OF COMPOSITE SLAB ROOF BEAMS TO CIP CONCRETE STRUCTURE SHALL BE MADE WITH SHORT SLOTTED HOLES PARALLEL TO THE BEAM AXIS.
13. LOW RISE STEEL FRAMING (INCLUDING CAFETERIA SHALL BE ERECTED ONLY AFTER THE TOWER ROOF FRAMING PLAN IS IN PLACE.
14. ROOF DECK SHALL BE 18 GAGE 1.5" METAL ROOF DECK.
15. AT LEVELS 3 THROUGH ROOF, ALL PAN-FORMED BEAMS BETWEEN GRIDS 5.1 AND 12 SHALL BE CAMBERED 1.0" AT MID-SPAN BETWEEN GRIDS A-B AND C-D AS SHOWN EXCEPT THAT PERIMETER BEAMS AND BEAMS CENTERED ON NUMBERED GRIDS SHALL NOT RECEIVE CAMBER. BEAMS OTHER THAN 25" IN DEPTH SHALL NOT RECEIVE CAMBER.
16. PROVIDE (2) ADDITIONAL #4 BARS WITHIN 12" OF OPENING EDGE WHERE NOTED. PROVIDE STANDARD ACI HOOK AT SHEAR WALL, AND STRAIGHT DEVELOPMENT LENGTH BEYOND EDGE OF OPENING.
17. ALL STEEL ROOF AND COMPOSITE ROOF FRAMING REACTIONS NOT INDICIATED ON PLAN SHALL BE DESIGNED FOR A MINIMUM 12 KIP ULTIMATE SHEAR REACTION AT EACH END.
18. CONTRACTOR SHALL COORDINATE ALL ELEVATOR OPENINGS, PIT DEPTHS, HOIST BEAMS AND SUPPORTS, SUMP PIT DIMENSIONS AND REQUIREMENTS WITH ELEVATOR MFR.
19. PROVIDE STD HOOK OF SLAB REINFORCEMENT CENTER IN SHEAR WALLS

GRAPHIC SCALE
0 8 16 24
SCALE IN FEET
1/8" = 1'-0"

N

S191

SYM	ZONE		DATE	APPROVED

REVISIONS

WALTER P MOORE
WALTER P. MOORE AND ASSOCIATES, INC.
500 SOUTH ORANGE AVENUE, SUITE 1100
ORLANDO, FLORIDA 32801.3852
PHONE: 407.418.2218 FAX: 407.418.2257
CERTIFICATE OF AUTHORIZATION NO. 3018
1007-1102/702
JAIME E. VASQUEZ P.E. NO. 49103
TO THE BEST OF THE ENGINEER'S KNOWLEDGE, THE PLANS AND SPECIFICATIONS COMPLY WITH THE APPLICABLE MINIMUM BUILDING CODES

SIGNATURES	DATE
DRAWN ANDREW MYERS	12.18.13
CHECKED JAIME E. VASQUEZ	12.18.13
SUBMITTED AS ENGINEER OF RECORD JAIME E. VASQUEZ	12.18.13
ST of LICENSURE: FL LICENSE NO: 49103	
APPROVED JOSEPH M. ALES	12/18/13
BRUCE KINNAIRD	12/18/13

NATIONAL AERONAUTICS AND SPACE ADMINISTRATION
JOHN F. KENNEDY SPACE CENTER, NASA
KENNEDY SPACE CENTER, FLORIDA

KSC CENTRAL CAMPUS
REPLACEMENT HEADQUARTERS BUILDING
PHASE 1
VOL. 1 OF 4

HIGH ROOF FRAMING PLAN - AREA 1

FILE NO.	SIZE	DWG. NO.	
C-12070.00	F	79K39622 VOL 1	
PCN. NO. 98745.1a		SHEET 132	

KSC FORM 1-11 (3/76)(C/G 3/94)

NOTICE: When Government drawings, specifications, or other data are used for any purpose other than in connection with a definitely related Government procurement operation, the United States Government thereby incurs no responsibility nor obligation whatsoever; and the fact that the Government may have furnished, furnished, or in any way supplied the said drawings, specifications or other data is not to be regarded by implication or otherwise as in any manner licensing the holder or any other person or corporation, or conveying any rights or permission to manufacture, use, or sell any patented invention that may in any way be related thereto.

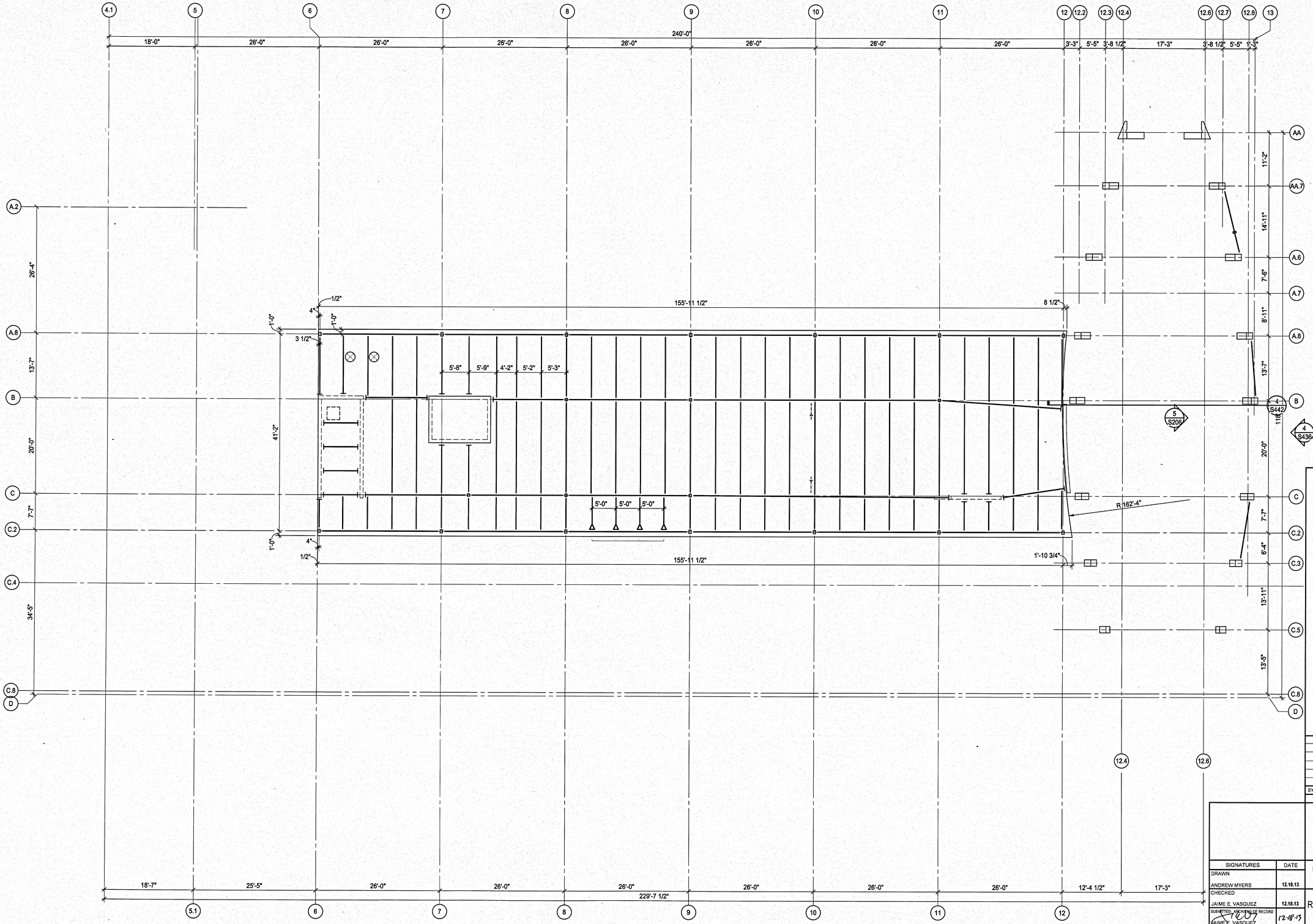

DIMENSION PLAN - HIGH ROOF

1/8" = 1'-0"

S191D

SIGNATURES	DATE
DRAWN	
ANDREW MYERS	12.18.13
CHECKED	
JAIME E. VASQUEZ	12.18.13
SUBMITTED, AUTHORIZED OF RECORD	
JAIME E. VASQUEZ	12.18.13
ST of LICENSURE: FL	
LICENSE NO: 49103	
APPROVED	
JOSEPH M. ALES	12.18.13
BRUCE KINNAIRD	12/18/13

SYM	ZONE		DATE	APPROVED

REVISIONS

WALTER P MOORE
WALTER P. MOORE AND ASSOCIATES, INC.
800 SOUTH ORANGE AVENUE, SUITE 1100
ORLANDO, FLORIDA 32801-8932
PHONE: 407.418.2219 FAX: 407.418.2267
CERTIFICATE OF AUTHORIZATION NO. 3818
027-11000-00
JAIME E. VASQUEZ P.E. NO. 49103
TO THE BEST OF THE ENGINEER'S KNOWLEDGE, THE PLANS AND SPECIFICATIONS COMPLY WITH THE APPLICABLE MINIMUM BUILDING CODES

NATIONAL AERONAUTICS AND SPACE ADMINISTRATION
JOHN F. KENNEDY SPACE CENTER, NASA
KENNEDY SPACE CENTER, FLORIDA

KSC CENTRAL CAMPUS
REPLACEMENT HEADQUARTERS BUILDING
PHASE 1
VOL 1 OF 4

DIMENSION PLAN - HIGH ROOF
FRAMING PLAN - AREA 1

FILE NO.	SIZE	DWG. NO.
C-12070.00	F	79K39622 VOL 1
PCN. NO. 98745.1a		SHEET 133

KSC FORM 1-11 (3/76)(C/G 3/94)

NOTICE: When Government drawings, specifications, or other data are used for any purpose other than in connection with a definitely related Government procurement operation, the United States Government thereby incurs no responsibility nor obligation whatsoever; and the fact that the Government may have formulated, furnished, or in any way supplied the said drawings, specifications or other data is not to be regarded by implication or otherwise as in any manner licensing the holder or any other person or corporation, or conveying any rights or permission to manufacture, use, or sell any patented invention that may in any way be related thereto.

NOTES :
1. REFER TO SHEET S221 FOR SHEAR WALL PARTIAL PLANS AND TYPICAL REINFORCEMENT.
2. REFER TO MECHANICAL, ELECTRICAL, AND PLUMBING DRAWINGS FOR SHEAR WALL PENETRATIONS. COORDINATE ALL SLEEVES AND PENETRATIONS NOT SHOWN WITH MEP DRAWINGS. CONTRACTOR SHALL COORDINATE SIZE AND LOCATION OF ALL MEP OPENINGS (INCLUDING THOSE NOT EXPLICITLY DEFINED IN THE STRUCTURAL DRAWINGS) PRIOR TO FABRICATION OF REINFORCEMENT AND CASTING OF CONCRETE.
3. PROVIDE ADDITIONAL REINFORCEMENT AROUND MEP, FP, AND TECH OPENINGS IN SHEAR WALL PER DETAIL 3/S422.
4. SHEAR WALL REINFORCEMENT DOWELS TO MATCH VERTICAL REINFORCEMENT.
5. REFER TO CONCRETE SPECIFICATIONS FOR CLASSES OF CONCRETE MATRIX.
6. COORDINATE PLACEMENT OF ALL EMBEDDED ITEMS WITH OTHER TRADES.
7. CONTRACTOR TO VERIFY SIZE OF ELEVATOR DOOR ROUGH OPENINGS WITH ELEVATOR MFR PRIOR TO FABRICATION.
8. COORDINATE CALL BUTTON BLOCKOUTS AND EMBEDDED CONDUITS WITH ARCHITECTURAL AND MANUFACTURERS DRAWINGS.

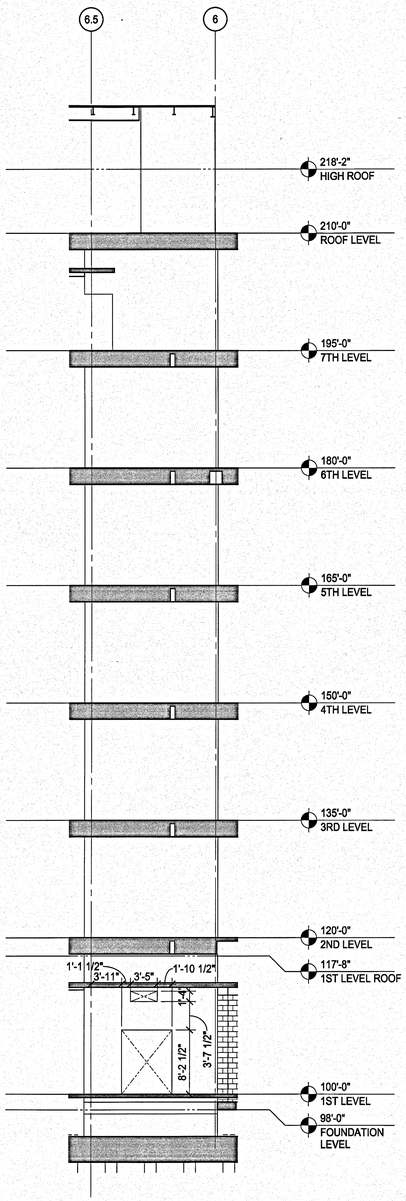

NORTH ELEVATION - SHEARWALL 1 (1)
1/8" = 1'-0"

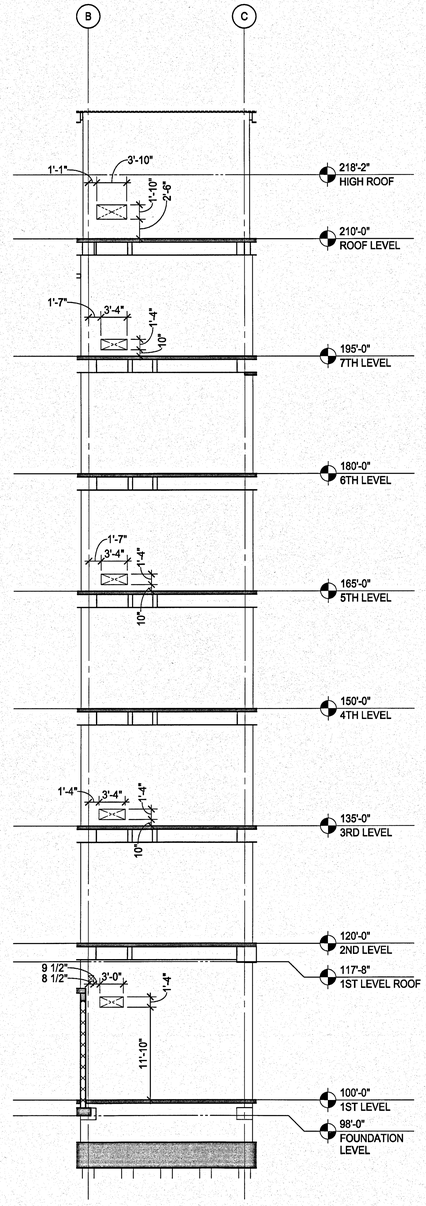

WEST ELEVATION - SHEARWALL 1 (2)
1/8" = 1'-0"

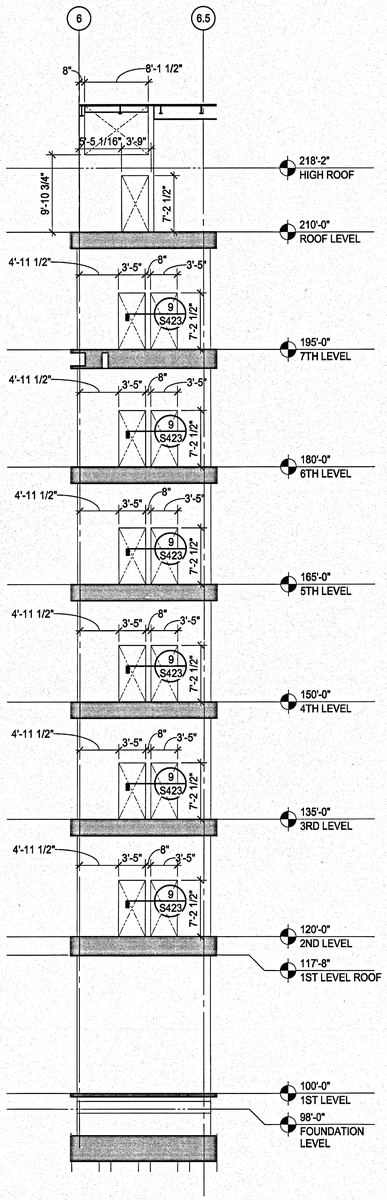

SOUTH ELEVATION - SHEARWALL 1 (3)
1/8" = 1'-0"

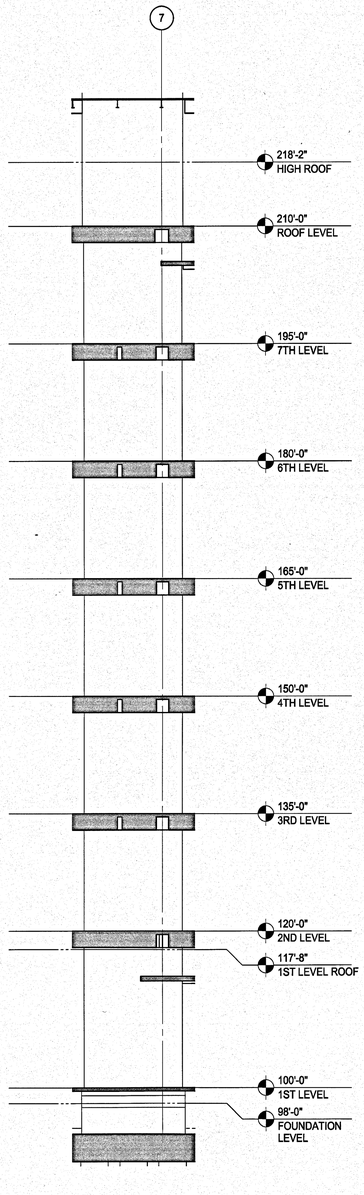

NORTH ELEVATION - SHEARWALL 2 (4)
1/8" = 1'-0"

SYM	ZONE		DATE	APPROVED

REVISIONS

WALTER P MOORE
WALTER P. MOORE AND ASSOCIATES, INC.
300 SOUTH ORANGE AVENUE, SUITE 1100
ORLANDO, FLORIDA 32801.8332
PHONE: 407.418.2218 FAX: 407.418.2267
CERTIFICATE OF AUTHORIZATION NO. 3818
007-11023-00
JAIME E. VASQUEZ P.E. NO. 49103
TO THE BEST OF THE ENGINEER'S KNOWLEDGE, THE PLANS AND SPECIFICATIONS COMPLY WITH THE APPLICABLE MINIMUM BUILDING CODES

SIGNATURES	DATE
DRAWN ANDREW MYERS	12.18.13
CHECKED JAIME E. VASQUEZ	12.18.13
SUBMITTED, ARCHITECT OF RECORD JAIME E. VASQUEZ	12.18.13
ST of LICENSURE: FL LICENSE NO: 49103	
APPROVED JOSEPH B. ROSS	12.18.13
BRUCE KINNAIRD	12/18/13

NATIONAL AERONAUTICS AND SPACE ADMINISTRATION
JOHN F. KENNEDY SPACE CENTER, NASA
KENNEDY SPACE CENTER, FLORIDA

KSC CENTRAL CAMPUS
REPLACEMENT HEADQUARTERS BUILDING
PHASE 1
VOL. 1 OF 4

SHEARWALL ELEVATIONS

FILE NO.	SIZE	DWG. NO.
C-12070.00	F	79K39622 VOL 1
PCN. NO. 98745.1a		SHEET 134

S202

NOTICE: When Government drawings, specifications, or other data are used for any purpose other than in connection with a definitely related Government procurement operation, the United States Government thereby incurs no responsibility nor obligation whatsoever; and the fact that the Government may have formulated, furnished, or in any way supplied the said drawings, specifications or other data is not to be regarded by implication or otherwise as in any manner licensing the holder or any other person or corporation, or conveying any rights or permission to manufacture, use, or sell any patented invention that may in any way be related thereto.

NOTES :
1. REFER TO SHEET S221 FOR SHEAR WALL PARTIAL PLANS AND TYPICAL REINFORCEMENT.
2. REFER TO MECHANICAL, ELECTRICAL, AND PLUMBING DRAWINGS FOR SHEAR WALL PENETRATIONS. COORDINATE ALL SLEEVES AND PENETRATIONS NOT SHOWN WITH MEP DRAWINGS. CONTRACTOR SHALL COORDINATE SIZE AND LOCATION OF ALL MEP OPENINGS (INCLUDING THOSE NOT EXPLICITLY DEFINED IN THE STRUCTURAL DRAWINGS) PRIOR TO FABRICATION OF REINFORCEMENT AND CASTING OF CONCRETE.
3. PROVIDE ADDITIONAL REINFORCEMENT AROUND MEP, FP, AND TECH OPENINGS IN SHEAR WALL PER DETAIL 3/S422.
4. SHEAR WALL REINFORCEMENT DOWELS TO MATCH VERTICAL REINFORCEMENT.
5. REFER TO CONCRETE SPECIFICATIONS FOR CLASSES OF CONCRETE MATRIX.
6. COORDINATE PLACEMENT OF ALL EMBEDDED ITEMS WITH OTHER TRADES.
7. CONTRACTOR TO VERIFY SIZE OF ELEVATOR DOOR ROUGH OPENINGS WITH ELEVATOR MFR PRIOR TO FABRICATION.
8. COORDINATE CALL BUTTON BLOCKOUTS AND EMBEDDED CONDUITS WITH ARCHITECTURAL AND MANUFACTURERS DRAWINGS.

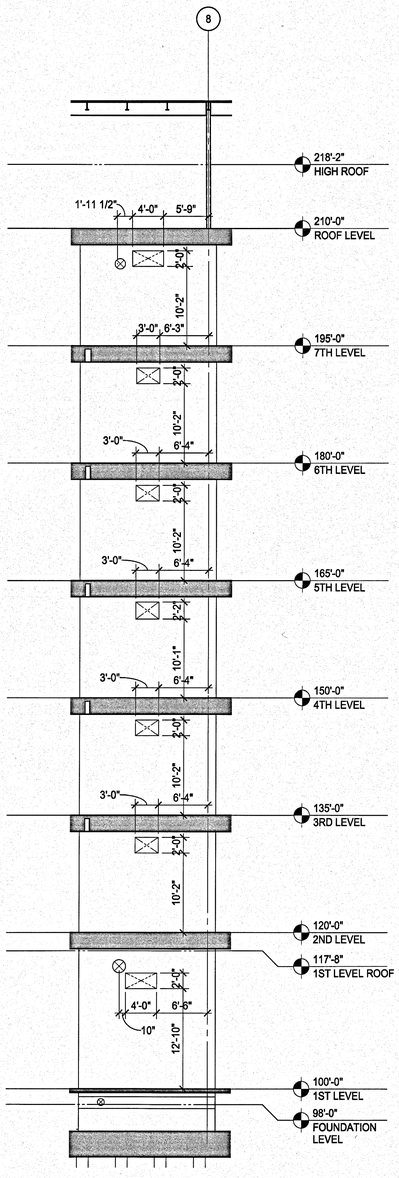

NORTH ELEVATION - SHEARWALL 3 (1)
1/8" = 1'-0"

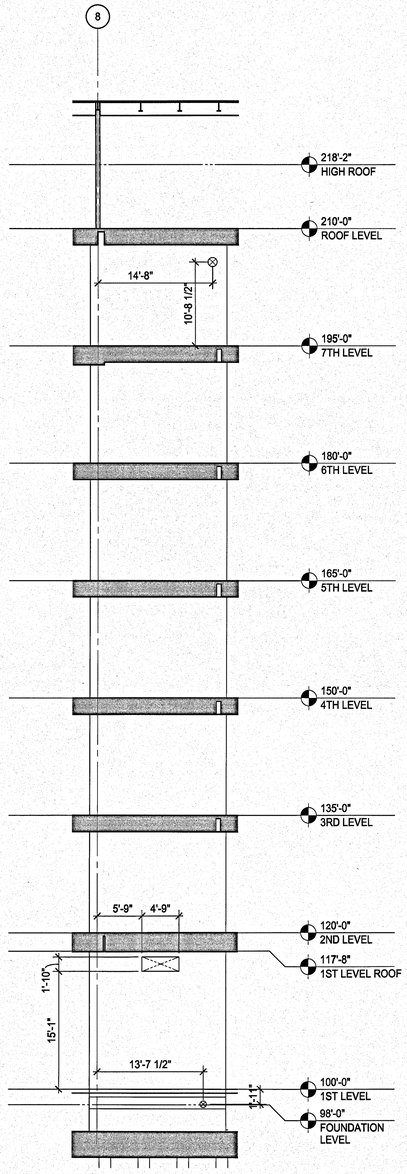

SOUTH ELEVATION - SHEARWALL 3 (2)
1/8" = 1'-0"

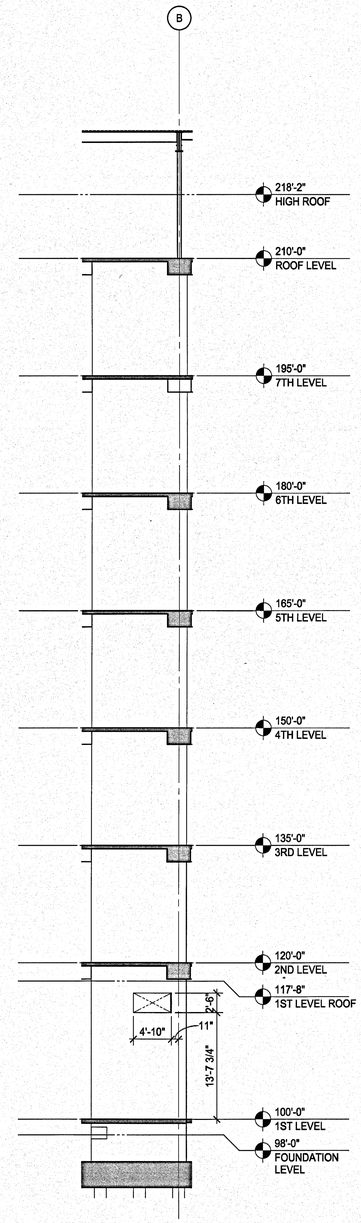

EAST ELEVATION - SHEARWALL 4 (3)
1/8" = 1'-0"

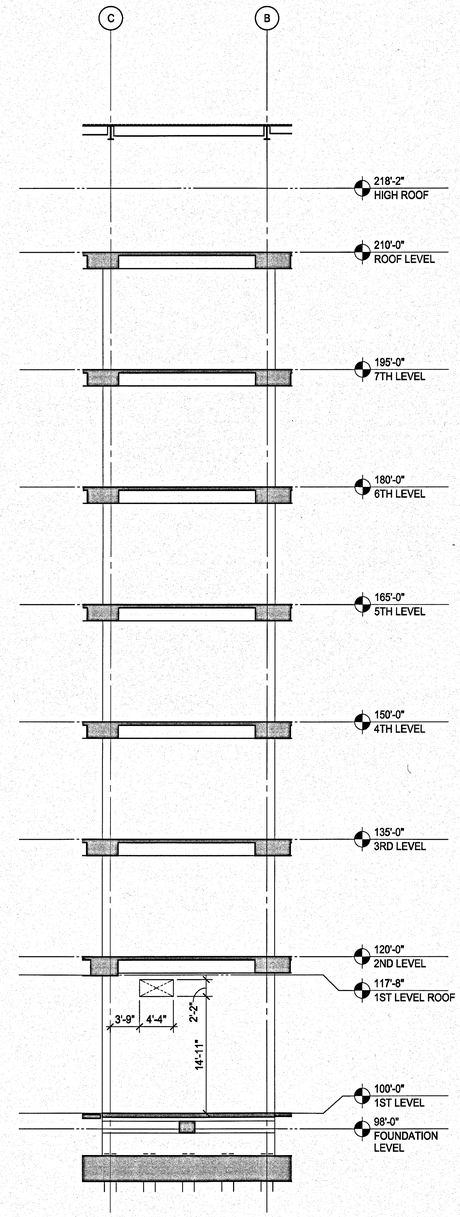

EAST ELEVATION - SHEARWALL 3 (4)
1/8" = 1'-0"

SIGNATURES	DATE
DRAWN ANDREW MYERS	12.18.13
CHECKED JAIME E. VASQUEZ	12.18.13
SUBMITTED BY/PRINCIPLE OF RECORD JAIME E. VASQUEZ	12.18.13
ST of LICENSURE: FL LICENSE NO: 49103	
APPROVED JOSEPH M. TUBB	12.18.13
BRUCE KINNAIRD	12/18/13

S203

SYM | ZONE | DATE APPROVED

REVISIONS

WALTER P MOORE
WALTER P. MOORE AND ASSOCIATES, INC.
300 SOUTH ORANGE AVENUE, SUITE 1100
ORLANDO, FLORIDA 32801.3882
PHONE: 407.418.2218 FAX: 407.418.2267
CERTIFICATE OF AUTHORIZATION NO. 3616
507-11202-00
JAIME E. VASQUEZ P.E. NO. 49103
TO THE BEST OF THE ENGINEER'S KNOWLEDGE, THIS PLANS AND SPECIFICATIONS COMPLY WITH THE APPLICABLE MINIMUM BUILDING CODES

NATIONAL AERONAUTICS AND SPACE ADMINISTRATION
JOHN F. KENNEDY SPACE CENTER, NASA
KENNEDY SPACE CENTER, FLORIDA

KSC CENTRAL CAMPUS
REPLACEMENT HEADQUARTERS BUILDING
PHASE 1
VOL. 1 OF 4

SHEARWALL ELEVATIONS

FILE NO.	SIZE	DWG. NO.
C-12070.00	F	79K39622 VOL 1
PCN. NO. 98745.1a		SHEET 135

NOTICE: When Government drawings, specifications, or other data are used for any purpose other than in connection with a definitely related Government procurement operation, the United States Government thereby incurs no responsibility nor obligation whatsoever; and the fact that the Government may have formulated, furnished, or in any way supplied the said drawings, specifications or other data is not to be regarded by implication or otherwise as in any manner licensing the holder or any other person or corporation, or conveying any rights or permission to manufacture, use, or sell any patented invention that may in any way be related thereto.

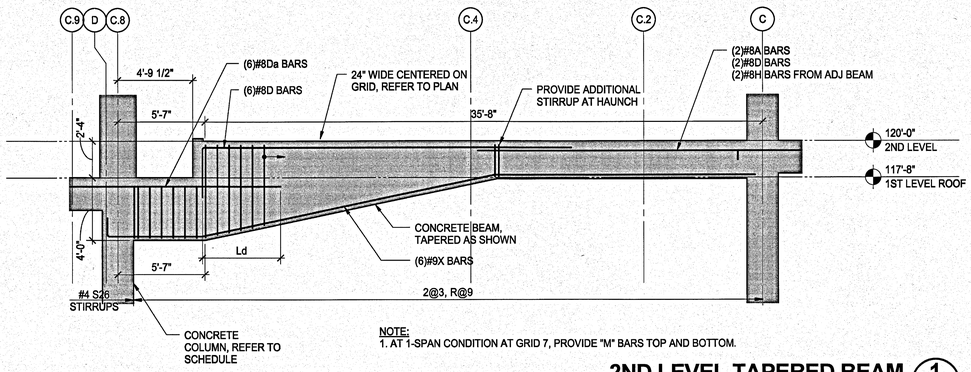

NOTE:
1. AT 1-SPAN CONDITION AT GRID 7, PROVIDE "M" BARS TOP AND BOTTOM.

2ND LEVEL TAPERED BEAM 1
1/4" = 1'-0"

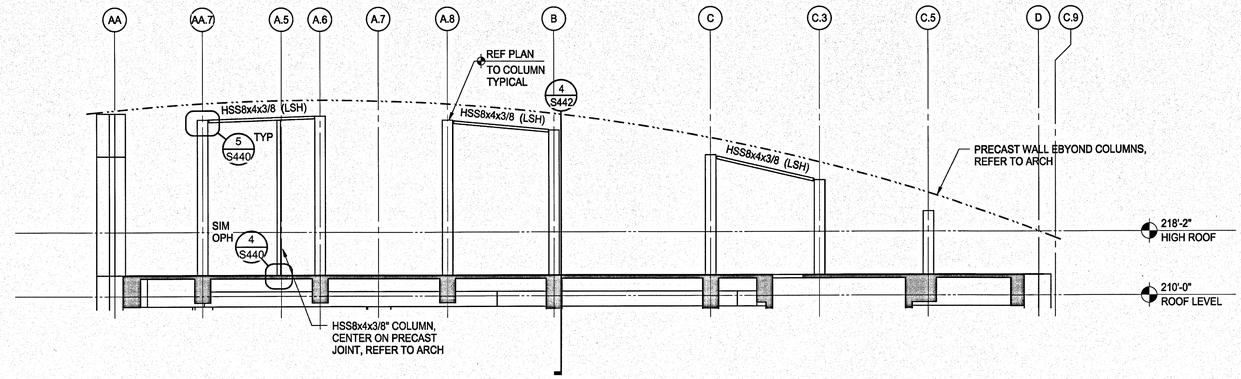

NOTE:
1. EXTERIOR STEEL AND CONNECTIONS SHALL BE HOT-DIP GALVANIZED.

PRECAST BRACING ELEVATION 5
1/8" = 1'-0"

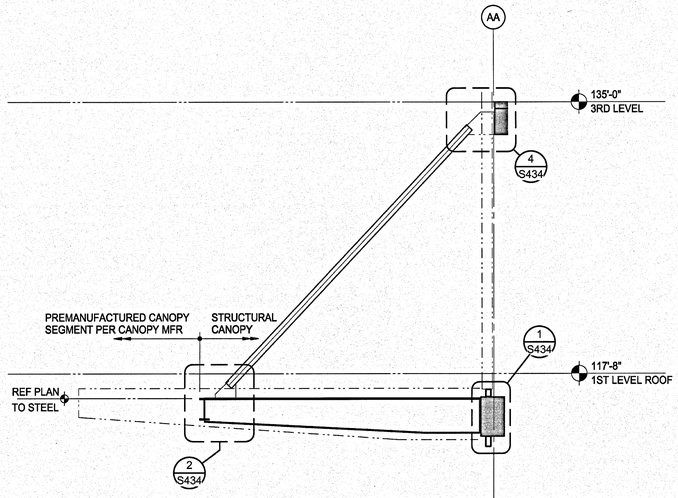

LOBBY TOWER CANOPY ELEVATION 2
1/4" = 1'-0"

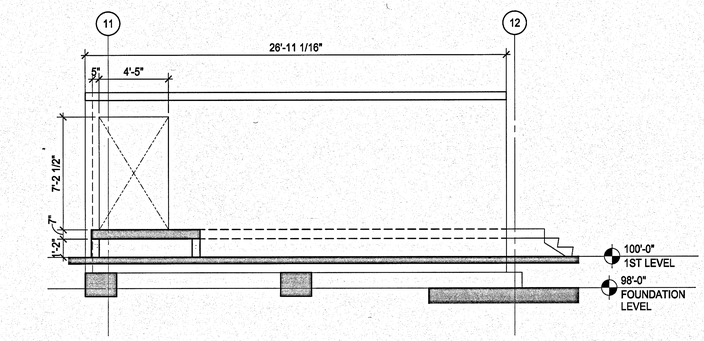

STAIR ELEVATION 6
1/4" = 1'-0"

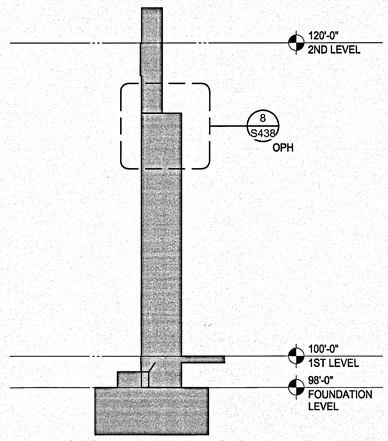

SECTION 3
1/4" = 1'-0"

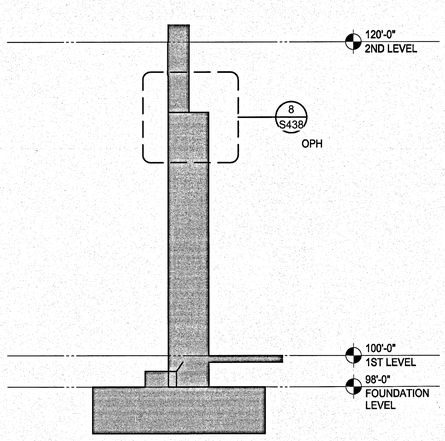

SECTION 4
1/4" = 1'-0"

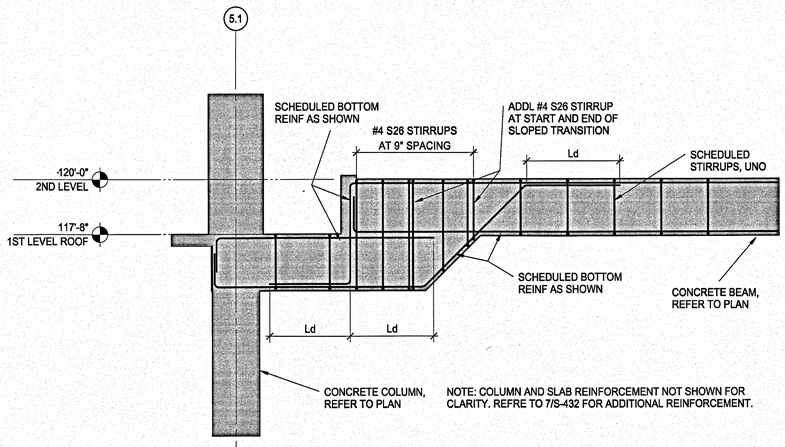

NOTE: COLUMN AND SLAB REINFORCEMENT NOT SHOWN FOR CLARITY. REFRE TO 7/S-432 FOR ADDITIONAL REINFORCEMENT.

2ND LEVEL STEPPED GIRDER 7
3/8" = 1'-0"

SIGNATURES	DATE
DRAWN ANDREW MYERS	12.18.13
CHECKED JAIME E. VASQUEZ	12.18.13
SUBMITTED AS ENGR. OF RECORD JAIME E. VASQUEZ	12.18.13
ST of LICENSURE: FL LICENSE NO: 49103	
APPROVED JOSEPH P. DAY	12.18.13
BRUCE KINNAIRD	12/18/13

SYM | ZONE | DATE | APPROVED

REVISIONS

WALTER P MOORE
WALTER P. MOORE AND ASSOCIATES, INC.
800 SOUTH ORANGE AVENUE, SUITE 1100
ORLANDO, FLORIDA 32801.5332
PHONE: 407.418.2218 FAX: 407.418.2257
CERTIFICATE OF AUTHORIZATION NO. 3918
507-11023-00
JAIME E. VASQUEZ P.E. NO. 49103
TO THE BEST OF THE ENGINEER'S KNOWLEDGE, THE PLANS AND SPECIFICATIONS COMPLY WITH THE APPLICABLE MINIMUM BUILDING CODES

NATIONAL AERONAUTICS AND SPACE ADMINISTRATION
JOHN F. KENNEDY SPACE CENTER, NASA
KENNEDY SPACE CENTER, FLORIDA

KSC CENTRAL CAMPUS
REPLACEMENT HEADQUARTERS BUILDING
PHASE 1
VOL. 1 OF 4

FRAMING ELEVATIONS

FILE NO.	SIZE	DWG. NO.
C-12070.00	F	79K39622 VOL 1

PCN. NO. 98745.1a | SHEET 136

S206

NOTICE: When Government drawings, specifications, or other data are used for any purpose other than in connection with a definitely related Government procurement operation, the United States Government thereby incurs no responsibility nor obligation whatsoever; and the fact that the Government may have formulated, furnished, or in any way supplied the said drawings, specifications or other data is not to be regarded by implication or otherwise as in any manner licensing the holder or any other person or corporation, or conveying any rights or permission to manufacture, use, or sell any patented invention that may in any way be related thereto.

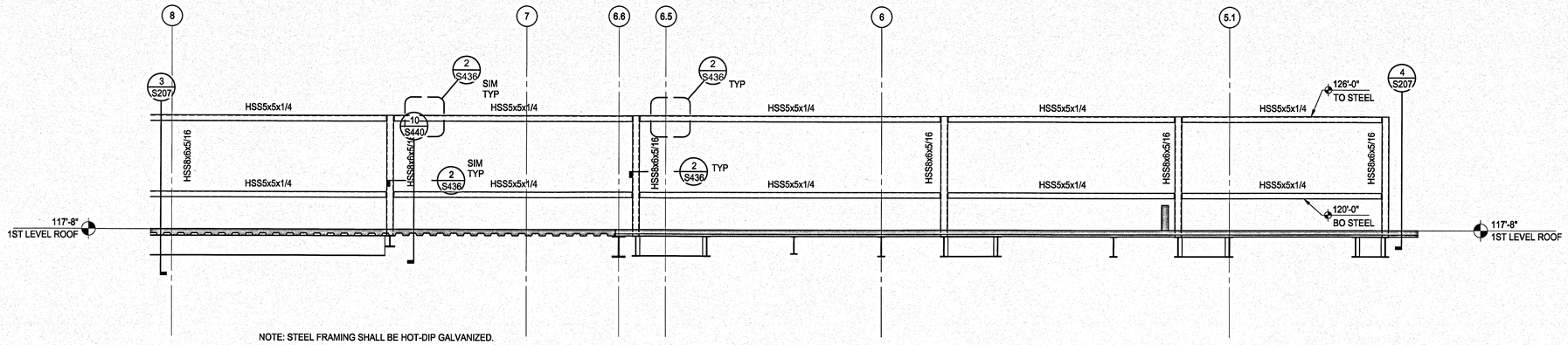

NOTE: STEEL FRAMING SHALL BE HOT-DIP GALVANIZED.

MECHANICAL SCREENWALL - NORTH ELEVATION 1

1/4" = 1'-0"

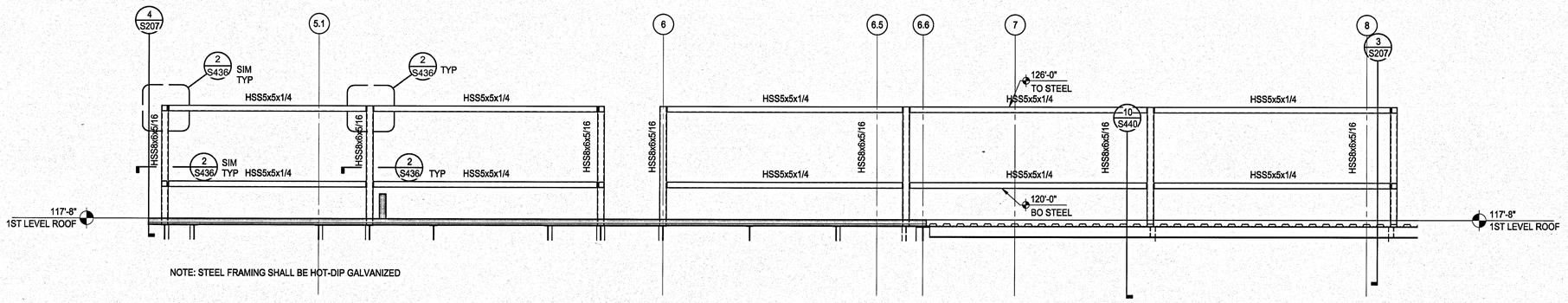

NOTE: STEEL FRAMING SHALL BE HOT-DIP GALVANIZED

MECHANICAL SCREENWALL - SOUTH ELEVATION 2

1/4" = 1'-0"

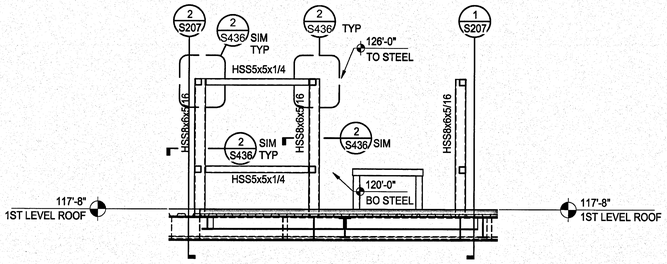

NOTE: STEEL FRAMING SHALL BE HOT-DIP GALVANIZED.

MECHANICAL SCREENWALL - WEST ELEVATION 3

1/4" = 1'-0"

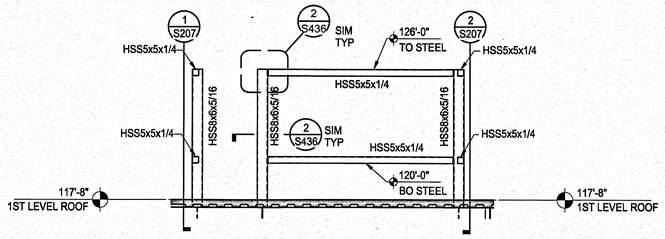

NOTE: STEEL FRAMING SHALL BE HOT-DIP GALVANIZED

MECHANICAL SCREENWALL - EAST ELEVATION 4

1/4" = 1'-0"

SYM	ZONE		DATE	APPROVED

REVISIONS

WALTER P MOORE
WALTER P. MOORE AND ASSOCIATES, INC.
300 SOUTH ORANGE AVENUE, SUITE 1100
ORLANDO, FLORIDA 32801.3332
PHONE: 407.418.2218 FAX: 407.418.2257
CERTIFICATE OF AUTHORIZATION NO. 3816
W07-11029-00
JAIME E. VASQUEZ P.E. NO. 49103
TO THE BEST OF THE ENGINEER'S KNOWLEDGE, THE PLANS AND SPECIFICATIONS COMPLY WITH THE APPLICABLE MINIMUM BUILDING CODES

SIGNATURES	DATE
DRAWN ANDREW MYERS	12.18.13
CHECKED JAIME E. VASQUEZ	12.18.13
SUBMITTED: ARCHITECT OF RECORD JAIME E. VASQUEZ	12.18.13
ST of LICENSURE: FL LICENSE NO: 49103	
APPROVED JOSEPH M. ALES	12/18/13
BRUCE KINNAIRD	12/18/13

NATIONAL AERONAUTICS AND SPACE ADMINISTRATION
JOHN F. KENNEDY SPACE CENTER, NASA
KENNEDY SPACE CENTER, FLORIDA

KSC CENTRAL CAMPUS
REPLACEMENT HEADQUARTERS BUILDING
PHASE 1
VOL. 1 OF 4

FRAMING ELEVATIONS

S207

FILE NO.	SIZE	DWG. NO.
C-12070.00	F	79K39622 VOL 1
PCN. NO. 98745.1a		SHEET 137

NOTICE: When Government drawings, specifications, or other data are used for any purpose other than in connection with a definitely related Government procurement operation, the United States Government thereby incurs no responsibility nor obligation whatsoever; and the fact that the Government may have formulated, furnished, or in any way supplied the said drawings, specifications or other data is not to be regarded by implication or otherwise as in any manner licensing the holder or any other person or corporation, or conveying any rights or permission to manufacture, use, or sell any patented invention that may in any way be related thereto.

CONCRETE BEAM SCHEDULE (L1-7)

MARK	SIZE WIDTH (IN)	SIZE DEPTH (IN)	REINFORCEMENT TOP BAR LEFT END	REINFORCEMENT BOTTOM BAR	REINFORCEMENT TOP BAR	REINFORCEMENT TOP BAR RIGHT END	STIRRUPS SIZE	STIRRUPS TYPE	STIRRUPS SPACING (EACH END FROM FACE OF SUPPORT)	REMARKS
B101	7	25	1-#9D	1-#9X, 1-#10V			#3	S13	2@3/6@6/R@9	BUNDLE BOTTOM REINFORCEMENT VERTICALLY
B102	7	25		1-#9T	2-#9H		#3	S13	2@3/6@6/R@9	
B103	7	25		1-#9X, 1-#10V		1-#9D	#3	S13	2@3/6@6/R@9	BUNDLE BOTTOM REINFORCEMENT VERTICALLY
B104	7	25	1-#9D	1-#11M, 1-#11V		1-#9D	#3	S13	2@3/6@6/R@9	ADDL (3)-#6 IN SLAB, CENTER ON BEAM, 12" SPACING MAX
B105	7	25	1-#6D	1-#8M		1-#6D	#3	S13	2@3/R@10	
B106	19	18					#3	S16	2@3/R@9	REFER TO ADJACENT BEAM FOR REINFORCEMENT
B107	19	25	2-#9R, 2-#9S	2-#8Z, 2-#8T			#3	S15	2@3/R@9	
B108	19	25		2-#8T	2-#8H, 2-#8J		#3	S15	2@3/R@9	
B109	19	25		2-#8X, 2-#8V		2-#8D	#3	S15	2@3/R@9	
B110	19	18					#3	S16	2@3/R@10	REFER TO ADJACENT BEAM FOR REINFORCEMENT
B111	19	25	2-#9R, 2-#9S	2-#9Y, 2-#9X, 2-#9V		2-#9D	#3	S15	2@3/R@10	
B112	19	25	2-#9D	2-#8M, 3-#8V		2-#9D	#3	S15	2@3/R@10	
B113	9	25					#3	S34	2@3/R@9	REFER TO ADJACENT BEAM FOR REINFORCEMENT
B114	9	25	2-#8R	2-#10Z			#3	S34	2@3/6@6/R@9	
B115	9	25		1-#9T	2-#8H, 1-#8J		#3	S34	2@3/6@6/R@9	
B116	9	25		2-#9X		2-#8D	#3	S34	2@3/6@6/R@9	
B117	9	29	2-#8D	2-#10M		2-#8D	#3	S34	2@3/R@9	
B118	9	29	2-#8D	2-#10M, 2-#8W		2-#8D	#3	S34	2@3/R@9	
B119	5	29	1-#6D	1-#6M		2-#8D	#3	S13	2@3/R@9	
B121	14	25	2-#6D	1-#10M		2-#6D	#4	S14	2@3/R@9	
B122	10	25	1-#6D	1-#10M		1-#6D	#3	S14	2@3/R@10	
B123	7	29	1-#9D	1-#11M, 1-#11V		1-#9D	#3	S13	2@3/6@6/R@9	
B124	18	21	2-#9D	2-#9M		2-#9D	#3	S15	2@3/R@10	FACE BARS: 3-#9 EACH FACE, EXTEND Ld INTO ADJACENT BEAM
B125	9	25	2-#6D	2-#8M		2-#6D	#3	S15	1@5/R@11	
B126	9	25	2-#6D	2-#8M		2-#6D	#3	S15	1@5/R@11	
B127	22	25	2-#9R, 2-#9S	2-#8Z, 2-#8T			#3	S15	2@3/R@10	
B128	22	25		2-#8T	2-#8H, 2-#8J		#3	S15	2@3/R@10	
B129	22	25		2-#8X, 2-#8V		2-#8D	#3	S15	2@3/R@10	
B130	9	25	1-#9D	1-#10M, 2-#10V		1-#9D	#3	S34	2@3/R@9	ADDL (3)-#6 IN SLAB, CENTER ON BM, 12" SPA MAX
B132	34	25	6-#8D(2i)	2-#8V, 4-#8X(2i)			#4	S28	2@3/R@6	
B133	34	25	4-#8A(2i) 4-#8B	2-#8V, 4-#8X(2i)		6-#8D(2i)	#4	S28	2@3/R@6	
B201	18	25	2-#8K	2-#8X(2i)		1-#8B	#3	S3	2@3/R@10	
B202	18	25		2-#8X(2i), 2-#8V		2-#8D, 1-#8E	#3	S3	2@3/R@6	
B203	12	25	2-#8D	2-#8M		2-#8D	#4	S15	2@3/R@6	
B205	16	25	2-#8D	2-#8X(2i)			#3	S3	2@3/R@10	
B206	16	25	2-#8A	2-#8T(2i)			#3	S3	2@3/R@10	
B207	16	25	2-#8A	2-#8X(2i)		2-#8D	#3	S3	2@3/R@10	
B208	18	25	2-#6D	2-#8M(2i)		2-#9D	#3	S15	1@5/R@10	
B209	18	25	3-#7D	2-#8M(2i), 1-#8V		3-#7D	#3	S16	2@3/R@10	3-#6 FACE BARS EA FACE
B210	18	25	2-#6D	2-#9M, 2-#9V, 1-#9W		2-#8D	#3	S14	2@3/R@10	
B211	30	25	2-#6D	2-#10M, 4-#10V, 4-#10W		2-#8D	#3	S26	2@3/R@9	
B212	18	25	2-#8D	2-#8X			#3	S3	2@3/R@10	
B213	18	25	2-#8A	2-#8T			#3	S3	2@3/R@10	
B214	18	25	2-#8A	2-#8X		2-#8D	#3	S3	2@3/R@10	
B215	20	32	2-#6D	2-#8M, 2-#8V, 2-#8W		2-#6D	#3	S14	2@3/R@12	
B216	30	32	4-#6D	2-#8M, 4-#8V		4-#6D 4-#8E	#3	S26	2@3/R@13	
B217	18	32	2-#6D 3-#6E	2-#6M(2i), 2-#6V		2-#6D	#3	S15	2@3/R@13	
B218	22	32					#3	S14	2@3/R@13	REFER TO BACKSPAN
B219	22	32	5-#6R	3-#6Y, 2-#6X		5-#6D	#3	S15	2@3/R@13	
B220	30	32	2-#6D 4-#6E	2-#8M(2i), 2-#6V, 1-#6W		2-#6D 4-#6E	#3	S27	2@3/R@13	
B221	30	32	2-#6D 4-#6E	2-#8M(2i), 2-#6V, 1-#6W		2-#6D 4-#6E	#3	S27	2@3/R@13	
B230	18	25	2-#9D 2-#9E	2-#9X 2-#9V			#3	S15	2@3/R@10	
B231	18	25	2-#9A 4-#9B	2-#9T 2-#9V 2-#9W			#3	S15	2@3/R@10	
B232	18	25	4-#9A 2-#9B	2-#9T 1-#9W			#3	S15	2@3/R@10	
B233	18	25	2-#9A 2-#9B	2-#9T 2-#9W			#3	S15	2@3/R@10	
B234	18	25	2-#9A 3-#9B	2-#9T 1-#9W			#3	S15	2@3/R@10	
B235	18	25	2-#9A 2-#9B	2-#9X 1-#9V		2-#9D 2-#9E	#3	S15	2@3/R@10	
B240	18	29	2-#6D	2-#8M 2-#8V			#3	S15	2@3/R@12	
B241	18	25		2-#6T	2-#8H 2-#8J		#3	S15	2@3/R@10	
B242	18	25		2-#8X 2-#8V 1-#6W		2-#6D	#3	S15	2@3/R@9	
B250	7	29	1-#6D	1-#8M, 1-#8V			#3	S13	2@3/R@12	BUNDLE BOTTOM REINFORCEMENT VERTICALLY
B251	7	25		1-#8T	2-#6H 1-#6J		#3	S13	2@3/R@10	
B252	7	25		1-#8X, 1-#8V		1-#6D	#3	S13	2@3/R@10	BUNDLE BOTTOM REINFORCEMENT VERTICALLY
B253	7	29	1-#8D	1-#10M, 1-#8V		1-#8D	#3	S13	2@3/R@11	BUNDLE BOTTOM REINFORCEMENT VERTICALLY
B254	7	25	1-#9D	1-#11M, 1-#11V		1-#9D	#3	S13	2@3/R@10	BUNDLE BOTTOM REINFORCEMENT VERTICALLY
B290	10	25	1-#9D	1-#11M, 1-#11V		1-#9D	#3	S13	2@3/6@6/R@9	ADDL (3)-#6 IN SLAB, CENTER ON BEAM, 12" SPACING MAX
B291	7	25	1-#9D	1-#11M, 1-#11V		1-#9D	#3	S13	2@3/6@6/R@9	ADDL (3)-#6 IN SLAB, CENTER ON BEAM, 12" SPACING MAX
B292	7	25	1-#9D	1-#11M, 1-#11V		1-#9D	#3	S13	2@3/6@6/R@9	ADDL (3)-#6 IN SLAB, CENTER ON BEAM, 12" SPACING MAX
B293	7	25	1-#9D	1-#11M, 1-#11V		1-#9D	#3	S13	2@3/6@6/R@9	ADDL (3)-#6 IN SLAB, CENTER ON BEAM, 12" SPACING MAX
B300	27	29	2-#8D	2-#8X(2i) 3-#8V 1-#8W			#3	S27	2@3/R@12	
B301	27	29		2-#8T(2i) 2-#8W	2-#8H 5-#8J		#3	S27	2@3/R@12	
B302	27	29		2-#8T(2i) 2-#10V 1-#8W			#3	S27	2@3/7@6/R@12	
B303	27	29		2-#8T(2i) 2-#10V 1-#8W	2-#8H 4-#10H		#3	S27	2@3/6@7/R@12	
B304	27	29		2-#8T(2i) 2-#10V 1-#10W			#3	S27	2@3/6@7/R@12	
B305	27	29		2-#8T(2i) 2-#8V	2-#10H 4-#8J		#3	S27	2@3/R@12	
B306	27	29		2-#8T(2i) 2-#8V			#3	S27	2@3/R@12	
B307	27	29	2-#8A 4-#8B	2-#8X(2i) 3-#8V 1-#8W		2-#8D	#3	S27	2@3/R@12	
B309	21	29	2-#8D 3-#8E	2-#6M(2i) 3-#8V			#3	S15	2@3/20@7/R@12	
B310	21	25		2-#8T(2i)	2-#8H 4-#8J		#3	S15	2@3/R@10	
B311	21	32		2-#6X(2i) 3-#8V 1-#8W		2-#8D 4-#8E	#3	S15	2@3/9@5/R@10	
B312	30	29	2-#8D 4-#6E	2-#8X 3-#8V 2-#6W			#3	S26	2@3/R@12	
B313	30	29		2-#6T 3-#6V	2-#10H 6-#8J		#3	S26	2@3/R@12	
B314	30	29		2-#8T 6-#8V 2-#6W			#3	S26	2@3/15@5/R@12	
B315	30	29		2-#6T 3-#6V	2-#8H 4-#8J		#3	S26	2@3/R@12	
B316	30	29		2-#8T 2-#8V 3-#6W			#3	S26	2@3/10@4/R@7	
B317	30	29	6-#8A 4-#10B	2-#8T 3-#10V 2-#8W			#3	S26	2@3/15@4/R@8	

CONCRETE BEAM SCHEDULE (L1-7)

MARK	SIZE WIDTH (IN)	SIZE DEPTH (IN)	REINFORCEMENT TOP BAR LEFT END	REINFORCEMENT BOTTOM BAR	REINFORCEMENT TOP BAR	REINFORCEMENT TOP BAR RIGHT END	STIRRUPS SIZE	STIRRUPS TYPE	STIRRUPS SPACING (EACH END FROM FACE OF SUPPORT)	REMARKS
B318	30	29	3-#8A 3-#8B	2-#6T 3-#6V 2-#8X 2-#8Y			#3	S26	2@3/R@12	
B319	30	25	3-#10A 4-#10B	2-#8M 6-#8V 1-#8W		2-#8D	#3	S26	2@3/R@10	
B751	12	25		2-#7M, 1-#7V	6-#9M		#3	S15	2@3/R@7	
B901	7	25	1-#8D	1-#8X			#3	S13	2@3/R@10	BUNDLE LONG. REINF. VERT.
B902	7	25	1-#10A 1-#8B	1-#10X 1-#8W		1-#10D	#3	S13	2@3/R@9	BUNDLE LONG. REINF. VERT.
B903	7	25	1-#10D	1-#10X 1-#8W			#3	S13	2@3/R@9	BUNDLE LONG. REINF. VERT.
B904	7	25		1-#8T	1-#10H 1-#10J		#3	S13	2@3/R@10	
B905	9	25		2-#10X 1-#6W		1-#10D	#3	S34	2@3/R@9	BUNDLE BOTTOM REINFORCEMENT HORIZ
B906	9	25	2-#6D	2-#11M		2-#6D	#3	S34	2@3/R@10	
B907	7	25	2-#10D	1-#10X 1-#10V			#3	S13	2@3/R@6	BUNDLE ALL LONGITUDINAL REINFORCEMENT VERTICALLY
B908	7	25		1-#8T	2-#10H		#3	S13	2@3/R@10	
B909	7	25		2-#10X		2-#10D	#3	S34	2@3/R@10	BUNDLE BOTTOM REINFORCEMENT VERTICALLY
B910	26	25	2-#10D(2i), 6-#8E	2-#10M(2i), 6-#10V		2-#10D	#3	S27	2@3/R@10	
B911	24	25					#3	S15	2@3/R@10	REFER TO BACKSPAN
B912	24	25	3-#6S 2-#8R	2-#6Y 2-#6T(2i) 3-#6V 1-#6W			#3	S15	2@3/R@10	
B913	24	25		2-#6T(2i)	2-#8H 4-#8J		#3	S15	2@3/R@10	
B914	24	25		2-#8X(2i) 3-#6V 1-#6W		3-#6E 2-#8D	#3	S15	2@3/16@6/R@10	
B915	18	25		4-#8M	2-#8M		#3	S15	2@3/R@10	FACE BARS: 5-#4 EACH FACE
B916	19	18					#3	S14	2@3/R@6	REFER TO BACKSPAN.
B917	19	25	5-#6S 2-#8R	2-#6Y 2-#6X 2-#6V 2-#6W			#3	S14	2@3/R@10	
B918	19	25		2-#6T	2-#6H 2-#6J 2-#6W		#3	S14	2@3/R@10	
B919	19	25		2-#6X 2-#6V 2-#6W		2-#6D 3-#6E	#3	S14	2@3/R@10	
B920	19	18	2-#10R, 3-#10S				#3	S14	2@3/R@7	REFER TO BACKSPAN
B921	21	29	3-#10D	2-#8Y, 4-#10X		3-#8D	#3	S14	2@3/R@10	
B922	19	18					#3	S14	2@3/R@6	REFER TO BACKSPAN.
B923	19	25	2-#8R 5-#6S	2-#6Y 2-#6X 2-#6V 3-#6W			#3	S14	2@3/R@9	
B924	19	25		2-#6T	4-#6H 2-#8J		#3	S14	2@3/R@10	
B925	19	25		2-#6X 3-#6V 1-#6W		2-#6D 3-#6E	#3	S14	2@3/R@9	
B926	18	25	2-#6D	2-#6X 2-#6V			#3	S15	2@3/R@10	
B927	18	25	4-#6B	2-#6T 2-#6V			#3	S15	2@3/R@10	
B928	18	25		2-#6T 2-#6Y		2-#6N 2-#6Q	#3	S15	2@3/R@10	
B929	18	25					#3	S15	2@3/R@10	REFER TO BACKSPAN
B930	24	25	2-#6D(2i), 3-#6E	2-#6X(2i) 2-#6V			#3	S27	2@3/R@10	
B931	24	25	2-#6A(2i), 4-#6B	2-#6T(2i) 1-#6V 2-#6W			#3	S27	2@3/R@10	
B932	24	25	2-#8A(2i), 4-#6B	2-#6T(2i) 1-#6V 2-#6W			#3	S27	2@3/R@10	
B933	24	25	2-#8A(2i), 4-#6B	2-#6T(2i) 1-#6V 2-#6W			#3	S27	2@3/R@10	
B934	24	25	2-#8A(2i), 4-#6B	2-#6T(2i) 1-#6V 2-#6W			#3	S27	2@3/R@10	
B935	24	25	2-#8A(2i), 5-#6B	2-#6T(2i) 1-#6V 2-#6W			#3	S27	2@3/R@10	
B936	24	25	2-#8A(2i), 4-#6B	2-#6T(2i) 1-#6V 2-#6W			#3	S27	2@3/R@10	
B937	24	25	2-#8A(2i), 5-#6B	2-#6X(2i) 3-#6V 1-#6W		2-#6D 3-#6E	#3	S27	2@3/R@10	
B938	36	25	2-#8D 5-#6E	2-#8X 4-#8V 2-#8W			#3	S26	2@3/R@10	
B939	36	25	2-#8A 5-#8B	2-#6T 4-#6V			#3	S26	2@3/R@10	
B940	36	25	2-#8A 5-#6B	2-#6T 4-#6V 2-#6W			#3	S26	2@3/R@10	
B941	36	25		2-#6T 4-#6V	2-#8H 5-#8J		#3	S26	2@3/R@10	
B942	36	25		2-#8T 4-#8V 2-#6W			#3	S26	2@3/R@7	
B943	36	25	7-#8A 3-#10B	2-#8T 4-#8V 2-#6W			#3	S26	2@3/R@7	
B944	36	25		2-#8T 5-#6V	5-#8H 6-#8J		#3	S26	2@3/R@10	
B945	28	25	2-#10B	2-#10X 6-#10V		2-#10D	#3	S26	2@3/13@6/R@10	
B946	36	25	3-#8D 5-#6E	2-#8X 5-#8V 2-#8W			#3	S26	2@3/R@9	
B947	36	25		4-#6V 2-#6T	2-#8H 6-#8J		#3	S26	2@3/R@10	
B948	36	25		2-#8T 3-#8V 2-#8W			#3	S26	2@3/R@8	
B949	36	25		4-#6V 2-#6T	2-#8H 5-#8J		#3	S26	2@3/R@10	
B950	36	25		2-#8T 3-#8V 2-#6W			#3	S26	2@3/R@7	
B951	36	25	2-#8A 9-#8B	2-#8T 3-#8V 2-#8W			#3	S26	2@3/R@7	
B952	36	25		4-#6V 2-#6T	3-#8H 6-#8J		#3	S26	2@3/R@10	
B953	28	25	1-#8B	2-#10X 3-#10V 3-#8W		2-#10D	#3	S26	2@3/R@10	
B954	24	25	2-#8D(2i), 4-#6E	2-#8X(2i) 2-#10V 2-#8W			#4	S27	2@3/22@6/R@10	
B955	24	29	2-#8A(2i), 6-#8B	2-#8T(2i) 2-#8V 2-#6W			#4	S27	1@1/12@3/R@6	
B956	24	29	2-#8A(2i), 6-#8B	2-#8T(2i) 2-#8V 2-#6W			#4	S27	1@1/12@3/R@6	
B957	24	25	2-#8A(2i), 5-#8B	2-#6T(2i) 2-#6V 2-#6W			#4	S27	2@3/R@10	
B958	24	25	2-#8A(2i), 4-#8B	2-#6T(2i) 2-#6V 2-#6W			#4	S27	2@3/R@10	
B959	24	25	2-#8A(2i), 4-#8B	2-#6T(2i) 2-#6V 2-#6W			#4	S27	2@3/R@10	
B960	24	25	2-#8A(2i), 5-#8B	2-#6X(2i) 3-#6V 1-#6W		2-#8D 4-#6E	#4	S27	2@3/R@10	
B961	19	29		4-#8M		2-#8D 2-#8E	#3	S14	2@3/R@9	
B962	36	29		2-#8T 3-#8V 2-#8W			#3	S26	2@3/R@8	
B963	36	29		4-#6V 2-#6T	2-#8H 6-#8J		#3	S26	2@3/R@10	
B966	12	25	2-#6D	2-#6M 1-#6V		2-#6D	#3	S15	2@3/R@10	
B967	49	25	3-#6D 4-#6E	2-#6M(2i) 7-#6V		3-#6D 4-#6E	#3	S19	2@3/R@10	
B969	24	25	4-#8A(2i), 4-#8B	2-#8T(2i) 2-#8V 2-#6W			#4	S27	2@3/R@10	
B970	24	25	2-#8A(2i), 6-#8B	2-#8T(2i) 2-#8V 2-#6W			#4	S27	2@3/R@10	
PB1	7	25	2-#6D	1-#6X			#4	S13	2@3/R@10	
PB2	7	25	2-#6A	1-#6X			#4	S13	2@3/R@10	
PB3	7	25		1-#6T	2-#6H		#4	S13	2@3/R@10	
PB4	7	25		1-#7T			#4	S13	2@3/R@10	
PB5	7	25		1-#6X		2-#6K	#4	S13	2@3/R@10	
PB6	7	25	2-#6K	1-#6X			#4	S13	2@3/R@10	
PB7	7	25	2-#6D	1-#6M		2-#6D	#4	S13	2@3/R@10	
PB8	7	25	2-#6A	1-#8X		2-#6D	#4	S13	2@3/R@10	
PB9	7	25	2-#6A	1-#8X		2-#6D	#4	S13	2@3/R@10	

NOTES:
1. REFER TO 8/S403 FOR TYPICAL BAR PLACEMENT NOTES.
2. REFER TO 7/S403 FOR BAR DESIGNATION DEFINITIONS.
3. REFER TO 9/S403 FOR STIRRUP DEFINITIONS.

SYM	ZONE		DATE	APPROVED
		REVISIONS		

WALTER P MOORE
WALTER P. MOORE AND ASSOCIATES, INC.
300 SOUTH ORANGE AVENUE, SUITE 1100
ORLANDO, FLORIDA 32801.8382
PHONE: 407.418.2218 FAX: 407.418.2267
CERTIFICATE OF AUTHORIZATION NO. 3818
007-11029-00
JAIME E. VASQUEZ P.E. NO. 49103
TO THE BEST OF THE ENGINEER'S KNOWLEDGE, THE PLANS AND SPECIFICATIONS COMPLY WITH THE APPLICABLE MINIMUM BUILDING CODES

SIGNATURES	DATE
DRAWN	
ANDREW MYERS	12.18.13
CHECKED	
JAIME E. VASQUEZ	12.18.13
SUBMITTED AS PART OF RECORD	
JAIME D VASQUEZ	12.18.13
ST of LICENSURE: FL	
LICENSE NO: 49103	
APPROVED	
BRUCE A. KINNAIRD	12.18.13
BRUCE KINNAIRD	12/18/13

NATIONAL AERONAUTICS AND SPACE ADMINISTRATION
JOHN F. KENNEDY SPACE CENTER, NASA
KENNEDY SPACE CENTER, FLORIDA

KSC CENTRAL CAMPUS
REPLACEMENT HEADQUARTERS BUILDING
PHASE 1
VOL. 1 OF 4

CONCRETE BEAM SCHEDULE

FILE NO.	SIZE	DWG. NO.	
C-12070.00	F	79K39622 VOL 1	
PCN. NO. 98745.1a		SHEET 138	

S211

NOTICE: When Government drawings, specifications, or other data are used for any purpose other than in connection with a definitely related Government procurement operation, the United States Government thereby incurs no responsibility nor obligation whatsoever; and the fact that the Government may have formulated, furnished, or in any way supplied the said drawings, specifications or other data is not to be regarded by implication or otherwise as in any manner licensing the holder or any other person or corporation, or conveying any rights or permission to manufacture, use, or sell any patented invention that may in any way be related thereto.

CONCRETE BEAM SCHEDULE (LROOF)

MARK	SIZE WIDTH (IN)	SIZE DEPTH (IN)	REINFORCEMENT TOP BAR LEFT END	REINFORCEMENT BOTTOM BAR	REINFORCEMENT TOP BAR	REINFORCEMENT TOP BAR RIGHT END	STIRRUPS SIZE	STIRRUPS TYPE	STIRRUPS SPACING (EACH END FROM FACE OF SUPPORT)	REMARKS
B105	7	25	1-#6D	1-#8M		1-#6D	#3	S13	2@3/R@10	
B122	10	25	1-#6D	1-#10M		1-#6D	#3	S14	2@3/R@10	
B201	18	25	2-#8K	2-#8X(2i)		1-#8B	#3	S3	2@3/R@10	
B701	7	25	1-#6D	1-#6X			#3	S13	2@3/R@10	
B702	7	25	1-#6A	1-#6T			#3	S13	2@3/R@10	
B703	7	25		1-#6T	1-#6H		#3	S13	2@3/R@10	
B704	7	25		1-#6T			#3	S13	2@3/R@10	
B705	7	25		1-#6T	1-#6H		#3	S13	2@3/R@10	
B706	7	25		1-#6T			#3	S13	2@3/R@10	
B707	7	25	1-#6A	1-#6T			#3	S13	2@3/R@10	
B708	7	25	1-#6A	1-#6X		1-#6D	#3	S13	2@3/R@10	
B709	7	25	1-#6K	1-#6X			#3	S13	2@3/R@10	
B710	7	25		1-#6T			#3	S13	2@3/R@10	
B711	7	25		1-#6T	1-#6H		#3	S13	2@3/R@10	
B712	7	25		1-#6T			#3	S13	2@3/R@10	
B713	7	25	1-#6A	1-#6X		1-#6D	#3	S13	2@3/R@10	
B715	24	42		6-#8M(2i)	6-#8M		#3	S15	2@3/R@10	PROVIDE (4)-#5 BARS EACH FACE SPACED EQUALLY THROUGH DEPTH OF BEAM
B716	24	42		6-#8M	6-#8M		#3	S14	2@3/R@10	PROVIDE (4)-#5 BARS EACH FACE SPACED EQUALLY THROUGH DEPTH OF BEAM
B717	24	42		6-#8M	6-#8M		#3	S14	2@3/R@10	PROVIDE (4)-#5 BARS EACH FACE SPACED EQUALLY THROUGH DEPTH OF BEAM
B718	24	42		7-#8M	6-#8M		#3	S14	2@3/20@10/R@19	PROVIDE (4)-#5 BARS EACH FACE SPACED EQUALLY THROUGH DEPTH OF BEAM
B721	24	42	2-#6D	2-#9M 2-#6V 2-#6W		2-#6D	#3	S14	2@3/R@19	PROVIDE (4)-#5 BARS EACH FACE SPACED EQUALLY THROUGH DEPTH OF BEAM
B722	24	42		6-#8M	6-#8M		#3	S14	2@3/R@10	PROVIDE (4)-#5 BARS EACH FACE SPACED EQUALLY THROUGH DEPTH OF BEAM
B723	24	42		6-#8M(2i)	6-#8M		#3	S15	2@3/R@10	PROVIDE (4)-#5 BARS EACH FACE SPACED EQUALLY THROUGH DEPTH OF BEAM
B724	7	25	1-#6K	1-#6X			#3	S13	2@3/R@10	
B725	7	25		1-#6T			#3	S13	2@3/R@10	
B726	7	25		1-#6T	1-#6H		#3	S13	2@3/R@10	
B727	7	25		1-#6X		1-#6D	#3	S13	2@3/R@10	
B730	7	25	1-#6D	1-#6M		1-#6D	#3	S13	2@3/R@10	
B731	7	25	1-#6D	1-#8M		1-#6D	#3	S13	2@3/R@10	
B732	7	25					#3	S13	2@3/R@10	REFER TO BACKSPAN
B733	7	25	1-#11R	1-#9Y 1-#9T			#3	S13	2@3/R@10	BUNDLE LONGITUDINAL REINFORCEMENT VERTICALLY
B734	7	25		1-#9T	1-#9H 1-#6J		#3	S13	2@3/R@10	BUNDLE LONGITUDINAL REINFORCEMENT VERTICALLY
B735	7	25		1-#9X 1-#6V		1-#9D	#3	S13	2@3/R@10	BUNDLE LONGITUDINAL REINFORCEMENT VERTICALLY
B736	7	25	1-#10D	1-#10X 1-#10V			#3	S13	2@3/R@8	BUNDLE LONGITUDINAL REINFORCEMENT VERTICALLY
B737	7	25		1-#8T	1-#10H 1-#8J		#3	S13	2@3/R@10	BUNDLE LONGITUDINAL REINFORCEMENT VERTICALLY
B738	7	25		1-#10X 1-#10V		1-#10D	#3	S13	2@3/R@6	BUNDLE LONGITUDINAL REINFORCEMENT VERTICALLY
B739	7	25	1-#8D	1-#8X 1-#8V			#3	S13	2@3/R@10	BUNDLE LONGITUDINAL REINFORCEMENT VERTICALLY
B740	7	25		1-#6T	1-#8H 1-#6J		#3	S13	2@3/R@10	BUNDLE LONGITUDINAL REINFORCEMENT VERTICALLY
B741	7	25		1-#8X 1-#8V		1-#8D	#3	S13	2@3/R@10	BUNDLE LONGITUDINAL REINFORCEMENT VERTICALLY
B742	7	25	1-#10D	1-#10M 1-#10V		1-#10D	#3	S13	2@3/R@9	BUNDLE LONGITUDINAL REINFORCEMENT VERTICALLY
B743	7	25	2-#10K	1-#8X			#3	S13	2@3/R@5	
B744	7	25		1-#10X 1-#8V		1-#10D	#3	S13	2@3/13@5/R@9	BUNDLE LONGITUDINAL REINFORCEMENT VERTICALLY
B745	7	25	1-#10D	1-#10M 1-#10V		1-#10D	#3	S13	2@3/R@9	BUNDLE LONGITUDINAL REINFORCEMENT VERTICALLY
B746	18	25	2-#6D	2-#6M 2-#6V		2-#6D	#3	S15	2@3/R@10	
B747	18	25	2-#6D	2-#6X 1-#6V			#3	S15	2@3/R@10	
B748	18	25	4-#6B	2-#6T 1-#6V			#3	S15	2@3/R@10	
B749	18	25	2-#6B	2-#6Y 2-#6T		2-#6R 2-#6P	#3	S15	2@3/R@10	
B750	18	25					#3	S15	2@3/R@10	REFER TO BACKSPAN
B751	12	25		2-#7M, 1-#7V	6-#9M		#3	S15	2@3/R@7	
B756	19	18					#3	S14	2@3/R@7	REFER TO BACKSPAN
B757	19	25	2-#8R 3-#6S	2-#6Y 3-#6X 2-#6V 1-#6W			#3	S14	2@3/R@10	
B758	19	25		2-#6T	2-#6H 3-#6J		#3	S14	2@3/R@10	
B759	19	25		2-#6X 3-#6V 2-#6W		2-#6D 3-#6E	#3	S14	2@3/R@10	
B760	19	18					#3	S3	2@3/R@7	REFER TO BACKSPAN
B761	19	25	3-#8R 3-#8S	2-#6Y 2-#8X 2-#10V 2-#10W		2-#8D	#3	S3	2@3/R@7	
B762	19	25		2-#6M 2-#6V	2-#6M		#3	S15	2@3/R@10	
B763	21	25	2-#8D 2-#10D	2-#10M 3-#10V 1-#10W		2-#8D 2-#10D	#3	S14	2@3/R@10	
B764	19	18					#3	S14	2@3/R@7	REFER TO BACKSPAN
B765	19	25	3-#8S 2-#8R	2-#8Y 2-#8X 2-#6V			#3	S14	2@3/R@10	
B766	19	25		2-#6T	2-#8H 2-#6J		#3	S14	2@3/R@10	
B767	19	25	2-#8B 1-#6B	2-#8X 2-#8V 2-#6W		3-#8D	#3	S14	2@3/R@9	
B768	19	18					#3	S14	2@3/R@7	REFER TO BACKSPAN
B769	19	25	3-#8S 2-#8R	2-#6Y 2-#6X 3-#6V 1-#6W			#3	S14	2@3/R@10	
B770	19	25		2-#6T	2-#8H 2-#8J		#3	S14	2@3/R@10	
B771	19	25	2-#6B	2-#6X 2-#8V 2-#8W		2-#8D 3-#6E	#3	S14	2@3/R@10	
B772	24	25	3-#6E 2-#6D	2-#6X(2i) 2-#6V			#3	S15	2@3/R@10	
B773	24	25	2-#6A 3-#6B	2-#6T(2i) 2-#6V			#3	S15	2@3/R@10	
B774	24	25	2-#6A 3-#6B	2-#6T(2i) 2-#6V			#3	S15	2@3/R@10	
B775	24	25	2-#6A 3-#6B	2-#6T(2i) 2-#6V			#3	S15	2@3/R@10	
B776	24	25	2-#6A 3-#6B	2-#6T 2-#6V 1-#6W			#3	S15	2@3/R@10	
B777	24	25	2-#6A 3-#6B	2-#6T(2i) 2-#6V			#3	S15	2@3/R@10	
B778	24	25	2-#6A 3-#6B	2-#6T(2i) 2-#6V			#3	S15	2@3/R@10	
B779	24	25	2-#8A 3-#6B	2-#6X(2i) 2-#6V 1-#6W		3-#6E 2-#6D	#3	S15	2@3/R@10	
B780	24	25	3-#6E 3-#6D	2-#8X(2i) 2-#8V 2-#8W			#3	S15	2@3/10@4/R@8	
B781	24	25	2-#8A 4-#8B	2-#6T(2i) 1-#6V 1-#6W			#3	S15	2@3/R@10	
B782	24	25	2-#6A 4-#6B	2-#6T(2i) 1-#6V 1-#6W			#3	S15	2@3/R@10	
B783	24	25	2-#6A 4-#6B	2-#6T(2i) 1-#6V 1-#6W			#3	S15	2@3/R@10	
B784	24	25	2-#6A 4-#6B	2-#6T(2i) 1-#6V 1-#6W			#3	S15	2@3/R@10	
B785	24	25	2-#6A 4-#6B	2-#6T(2i) 1-#6V 1-#6W			#3	S15	2@3/R@10	

CONCRETE BEAM SCHEDULE (LROOF)

MARK	SIZE WIDTH (IN)	SIZE DEPTH (IN)	REINFORCEMENT TOP BAR LEFT END	REINFORCEMENT BOTTOM BAR	REINFORCEMENT TOP BAR	REINFORCEMENT TOP BAR RIGHT END	STIRRUPS SIZE	STIRRUPS TYPE	STIRRUPS SPACING (EACH END FROM FACE OF SUPPORT)	REMARKS
B786	24	25	2-#8A 3-#8B	2-#6X(2i) 2-#6V 1-#6W		3-#6E 2-#6D	#3	S15	2@3/R@10	
B787	26	25	2-#8D 3-#8E	2-#10M(2i) 4-#10V 1-#10W		2-#8D	#3	S27	2@3/R@10	
B789	24	25	2-#8R 3-#6S	2-#6Y 2-#6T(2i) 3-#6V			#3	S15	2@3/R@10	
B790	24	25		2-#6T(2i)	2-#8H 3-#8J		#3	S15	2@3/R@10	
B791	24	25		2-#6X(2i) 3-#6V 1-#6W		2-#6D 3-#6E	#3	S15	2@3/R@10	
B792	19	25					#3	S15	2@3/R@7	REFER TO BACKSPAN
B793	24	25	2-#6R 3-#8S	2-#8X(2i) 2-#6Y 3-#8V			#3	S15	2@3/R@10	
B794	24	25		2-#6T	2-#8H 3-#6J		#3	S15	2@3/R@10	
B795	24	25		2-#8X 3-#8V		2-#6D 3-#6E	#3	S15	2@3/R@10	
B796	48	25	2-#8D, 6-#6E	2-#8X, 4-#6V, 1-#6W			#3	S26	2@3/R@10	
B797	36	25	2-#6A, 6-#6B	2-#6T, 4-#6V			#3	S26	2@3/R@10	
B798	36	25	2-#6A, 6-#6B	2-#6T, 4-#6V, 1-#6W			#3	S26	2@3/R@10	
B799	36	25	4-#6A, 4-#6B	2-#6T, 4-#6V			#3	S26	2@3/R@10	
B800	36	25	5-#8B, 2-#6A	4-#6V, 2-#6T, 3-#6W			#3	S26	2@3/R@10	
B801	36	25	4-#6A, 7-#8B	4-#6V, 2-#6T, 3-#6W			#3	S26	2@3/R@10	
B802	36	25	2-#8A 6-#8B	4-#6T 4-#6W		2-#9D 6-#9A	#4	S26	2@3/R@10	
B803	24	57		6-#9X	6-#9M		#4	S26	5@3/R@10	
B804	48	25	2-#8D, 6-#6E	2-#8X, 4-#6V, 1-#6W			#3	S26	2@3/R@10	
B805	36	25		2-#8T, 4-#6V	6-#6J, 2-#8H		#3	S26	2@3/R@10	
B806	36	25		2-#8T, 4-#6V, 2-#6W			#3	S26	2@3/R@10	
B807	36	25	4-#6A, 4-#6B	2-#6T, 4-#6V			#3	S26	2@3/R@10	
B808	36	25	2-#6A, 7-#6B	2-#6T, 2-#6W, 4-#6V			#3	S26	2@3/R@10	
B809	36	25	4-#8A, 4-#8B	3-#6T, 5-#6W			#3	S26	2@3/R@10	
B810	36	25	2-#8A 6-#8B	4-#6T 4-#6W		2-#9D 6-#9A	#3	S27	2@3/R@10	
B811	24	57		6-#9X	6-#9M		#3	S26	5@3/R@10	
B812	12	25		1-#7M	1-#7M		#3	S13	2@3/R@10	
B817	18	48	4-#7D (2i)	4-#7X (2i)			#4	S16	2@3/R@8	FACE BARS: 5-#4 EACH FACE
B818	18	48	2-#7A(2) 2-#7B	2-#7T(2i) 2-#7V			#4	S16	2@3/R@6	FACE BARS: 5-#4 EACH FACE
B819	18	48	2-#7H(2) 2-#7J	2-#7T(2i) 2-#7V			#4	S16	2@3/R@8	FACE BARS: 5-#4 EACH FACE
B820	18	48		2-#7T(2i) 2-#7V			#4	S16	2@3/R@8	FACE BARS: 5-#4 EACH FACE
B821	18	48	2-#7A(2) 2-#9B	2-#7T(2i) 2-#7V			#4	S16	2@3/R@8	FACE BARS: 5-#4 EACH FACE
B822	18	48	2-#7A(2) 2-#7B	4-#7X (2i)		4-#7D (2i)	#4	S16	2@3/R@8	FACE BARS: 5-#4 EACH FACE
B915	18	25		4-#8M	2-#8M		#3	S15	2@3/R@10	FACE BARS: 5-#4 EACH FACE
B964	20	25	2-#8B	2-#8T 2-#8V 2-#8W		2-#8B	#3	S14	2@3/R@10	
B965	14	25	2-#6D	2-#6M 2-#6V		2-#6D	#3	S15	2@3/R@10	
B968	28	25		4-#8M	4-#8M		#3	S15	2@3/R@10	

NOTES:
1. REFER TO 8/S403 FOR TYPICAL BAR PLACEMENT NOTES.
2. REFER TO 7/S403 FOR BAR DESIGNATION DEFINITIONS.
3. REFER TO 9/S403 FOR STIRRUP DEFINITIONS.

SYM	ZONE		DATE	APPROVED
		REVISIONS		

WALTER P MOORE
WALTER P. MOORE AND ASSOCIATES, INC.
300 SOUTH ORANGE AVENUE, SUITE 1100
ORLANDO, FLORIDA 32801.3332
PHONE: 407.418.2218 FAX: 407.418.2257
CERTIFICATE OF AUTHORIZATION NO. 3818

JAIME E. VASQUEZ P.E. NO. 49103
TO THE BEST OF THE ENGINEER'S KNOWLEDGE, THE PLANS AND SPECIFICATIONS COMPLY WITH THE APPLICABLE MINIMUM BUILDING CODES

SIGNATURES	DATE
DRAWN ANDREW MYERS	12.18.13
CHECKED JAIME E. VASQUEZ	12.18.13
SUBMITTED: ARCHIVING OF RECORD JAIME E. VASQUEZ	12.18.13
ST of LICENSURE: FL LICENSE NO: 49103	
APPROVED JOSEPH M. ALES	12.18.13
BRUCE KINNAIRD	12/20/13

NATIONAL AERONAUTICS AND SPACE ADMINISTRATION
JOHN F. KENNEDY SPACE CENTER, NASA
KENNEDY SPACE CENTER, FLORIDA

KSC CENTRAL CAMPUS
REPLACEMENT HEADQUARTERS BUILDING
PHASE 1
VOL. 1 OF 4

CONCRETE BEAM SCHEDULE

FILE NO.	SIZE	DWG. NO.
C-12070.00	F	79K39622 VOL 1
PCN. NO. 98745.1a		SHEET 139

S212

NOTICE: When Government drawings, specifications, or other data are used for any purpose other than in connection with a definitely related Government procurement operation, the United States Government thereby incurs no responsibility nor obligation whatsoevrec; and the fact that the Government may have formulated, furnished, or in any way supplied the said drawings, specifications or other data is not to be regarded by implication or otherwise as in any manner licensing the holder or any other person or corporation, or conveying any rights or permission to manufacture, use, or sell any patented invention that may in any way be related thereto.

CONCRETE COLUMN SCHEDULE

CONCRETE STRENGTH F'c (PSI)	COLUMN MARK	C1	C2	C3	C4	C5	C6	C7	C8	C9	C10	C11	C12	C13	C14	C15	C16	C17	C18	C19	C20	C21
	FLOOR LEVEL																					
6000	REFER TO NOTE 4 ROOF LEVEL 210'-0"	18x18 8-#8 - (3F) #3@12"	18x18 8-#8 - (3F) #3@12"	18x18 8-#8 - (3F) #3@12"	18x22 10-#10 - (4L-3S) #4@16"		18x22 10-#11 - (4L-3S) #4@16"						18x18 8-#8 - (3F) #3@16"	18x18 8-#8 - (3F) #3@16"	18x18 8-#10 - (3F) #4@16"						18x18 8-#9 - (3F) #3@12"	
6000	7TH LEVEL 195'-0"	18x18 8-#8 - (3F) #3@12"	18x18 8-#8 - (3F) #3@12"	18x18 8-#8 - (3F) #3@12"	18x22 10-#10 - (4L-3S) #4@16"		18x22 10-#11 - (4L-3S) #4@16"	18x18 8-#10 - (3F) #4@10"	18x18 8-#9 - (3F) #3@18"	24x24 12-#9 - (4F) #3@12"	18X18 8-#10 - (3F) #4@16"	18x18 8-#9 - (3F) #4@16"	18x18 8-#8 - (3F) #3@16"	18x18 8-#8 - (3F) #3@16"	18x18 8-#10 - (3F) #4@16"	12x28 8-#8 - (4L-2S) #3@12"	12x36 10-#9 - (5L-2S) #4@12"	12x36 10-#10 - (5L-2S) #4@10"			18x18 8-#9 - (3F) #3@12"	18x22 10-#9 - (4L-3S) #4@16"
6000	6TH LEVEL 180'-0"	18x18 8-#8 - (3F) #3@16"	18x18 8-#8 - (3F) #3@16"	18x18 8-#8 - (3F) #3@16"	18x22 10-#9 - (4L-3S) #4@16"		18x22 10-#10 - (4L-3S) #4@16"	18x18 8-#10 - (3F) #4@10"	18x18 8-#9 - (3F) #3@18"	24x24 12-#8 - (4F) #3@12"	18X18 8-#10 - (3F) #4@16"	18x18 8-#9 - (3F) #4@16"	18x18 8-#8 - (3F) #3@16"	18x18 8-#8 - (3F) #3@16"	18x18 8-#10 - (3F) #3@18"	12x28 8-#8 - (4L-2S) #3@12"	12x36 10-#9 - (5L-2S) #3@12"	12x36 10-#10 - (5L-2S) #3@12"			18x18 8-#9 - (3F) #3@12"	18x22 10-#9 - (4L-3S) #4@16"
6000	5TH LEVEL 165'-0"	18x18 8-#8 - (3F) #3@16"	18x18 8-#8 - (3F) #3@16"	18x18 8-#8 - (3F) #3@16"	18x22 10-#9 - (4L-3S) #4@16"		18x22 10-#10 - (4L-3S) #4@16"	18x18 8-#10 - (3F) #4@10"	18x18 8-#9 - (3F) #3@18"	24x24 12-#8 - (4F) #3@12"	18X18 8-#10 - (3F) #3@12"	18x18 8-#9 - (3F) #3@18"	18x18 8-#8 - (3F) #3@16"	18x18 8-#8 - (3F) #3@16"	18x18 8-#10 - (3F) #3@18"	12x28 8-#8 - (4L-2S) #3@12"	12x36 10-#9 - (5L-2S) #3@12"	12x36 10-#10 - (5L-2S) #3@12"			18x18 8-#9 - (3F) #3@12"	18x22 10-#9 - (4L-3S) #4@16"
6000	4TH LEVEL 150'-0"	18x18 8-#8 - (3F) #3@16"	18x18 8-#8 - (3F) #3@16"	18x18 8-#8 - (3F) #3@16"	18x22 10-#9 - (4L-3S) #4@16"		18x22 10-#10 - (4L-3S) #4@16"	18x18 8-#10 - (3F) #4@10"	18x18 8-#9 - (3F) #3@18"	24x24 12-#8 - (4F) #3@12"	18X18 8-#10 - (3F) #3@12"	18x18 8-#9 - (3F) #3@18"	18x18 8-#8 - (3F) #3@16"	18x18 8-#8 - (3F) #3@16"	18x18 8-#10 - (3F) #3@18"	12x28 8-#8 - (4L-2S) #3@12"	12x36 10-#9 - (5L-2S) #3@12"	12x36 10-#10 - (5L-2S) #3@12"			18x18 8-#9 - (3F) #3@12"	18x22 10-#11 - (4L-3S) #4@16"
6000	3RD LEVEL 135'-0"	18x22 10-#8 - (4L-3S) #3@16"	18x22 10-#8 - (4L-3S) #3@16"	18x22 10-#8 - (4L-3S) #3@16"	18x22 10-#9 - (4L-3S) #3@16"		18x22 10-#10 - (4L-3S) #4@16"	18x18 8-#10 - (3F) #4@10"	20x20 12-#9 - (4F) #3@18"	24x24 12-#8 - (4F) #3@12"	20x20 12-#8 - (4F) #3@12"	18x18 8-#9 - (3F) #3@18"	18x22 10-#11 - (4L-3S) #4@18"	18x22 10-#11 - (4L-3S) #4@18"	18x22 10-#10 - (4L-3S) #3@18"	12x28 8-#8 - (4L-2S) #3@12"	12x36 10-#10 - (5L-2S) #3@12"	12x36 10-#10 - (5L-2S) #3@12"			18x22 10-#9 - (4L-3S) #3@16"	20x22 12-#10 - (4F) #3@18"
6000	2ND LEVEL 120'-0"	28"Ø 10-#8 #3@16"	24"Ø 10-#8 #3@16"	28"Ø 10-#8 #3@16"	28"Ø 10-#8 #3@16"		28"Ø 10-#10 #3@18"	24x24 12-#10 - (4F) #4@16"	24x24 12-#9 - (4F) #3@18"	24x24 12-#8 - (4F) #3@12"	24x24 12-#8 - (4F) #3@12"	18x18 8-#9 - (3F) #3@18"	28"Ø 12-#11 #4@18"	28"Ø 12-#11 #4@18"	28"Ø 10-#10 #3@18"	16x36 14-#10 (6L-3S) #3@16"	14x44 14-#8 - (6L-3S) #3@14"	16x48 18-#10 - (8L-3S) #3@16"			28"Ø 10-#8 #3@16"	24x24 12-#10 - (4F) #3@18"
6000	1ST LEVEL 100'-0"	28"Ø 10-#8 #3@16"	28"Ø 10-#8 #3@16"	24x24 12-#8 - (4F) #3@16"	24x24 12-#8 - (4F) #3@16"	18x18 8-#7 - (3F) #3@14"	24x24 12-#10 - (4F) #3@18"	24x24 12-#10 - (4F) #4@16"	28"Ø 12-#9 #3@18"	24x24 12-#9 - (4F) #3@12"	24x24 12-#9 - (4F) #3@12"	18x18 8-#9 - (3F) #3@18"	24x24 12-#11 - (4F) #4@18"	28"Ø 12-#11 #4@18"	24x24 12-#10 - (4F) #3@18"	31x36 16-#9 - (5F) #3@18"	14x44 14-#8 - (6L-3S) #3@14"	31x48 22-#10 - (8L-5S) #3@18"	20"Ø 10-#9 #3@18"	18x18 8-#11 - (3F) #3@18"	24x24 12-#8 - (4F) #3@16"	28"Ø 12-#10 #3@18"
6000	FOUNDATION 98'-0"	28"Ø 10-#8 #3@16"	28"Ø 10-#8 #3@16"	24x24 12-#8 - (4F) #3@16"	24x24 12-#8 - (4F) #3@16"	18x18 8-#7 - (3F) #3@14"	24x24 12-#10 - (4F) #3@18"	24x24 12-#10 - (4F) #4@16"	28"Ø 12-#9 #3@18"	24x24 12-#9 - (4F) #3@12"	24x24 12-#9 - (4F) #3@12"	18x18 8-#9 - (3F) #3@18"	24x24 12-#11 - (4F) #4@18"	28"Ø 12-#11 #4@18"	24x24 12-#10 - (4F) #3@18"	31x36 16-#9 - (5F) #3@18"	14x44 14-#8 - (6L-3S) #3@14"	31x48 22-#10 - (8L-5S) #3@18"	20"Ø 10-#9 #3@18"	18x18 8-#11 - (3F) #3@18"	24x24 12-#8 - (4F) #3@16"	28"Ø 12-#10 #3@18"

NOTES:

1. REFER TO COLUMN SCHEDULE FOR COLUMN CONCRETE STRENGTH, COLUMN SIZE, VERTICAL REINFORCEMENT SIZE AND ARRANGEMENT, AND TIE SIZE AND SPACING.
2. REFER TO COLUMN SPLICE DETAILS IN THE TYPICAL DETAILS FOR ADDITIONAL INFORMATION ABOUT COLUMN VERTICAL REINFORCEMENT AND TIES.
3. SQUARE AND RECTANGULAR COLUMNS AS INDICATED IN THE COLUMN SCHEDULE UNDER "BAR ARRANGEMENT" SHALL HAVE VERTICAL REINFORCING STEEL DISTRIBUTED AMONG THE FOUR COLUMN FACES ACCORDING TO THE FOLLOWING NOTATION:
   SQUARE COLUMNS:
   a. 4F = EQUAL NUMBER OF BARS WITH A SYMMETRICAL ARRANGEMENT ON EACH OF THE FOUR COLUMN FACES.
   b. 2F = EQUAL NUMBER OF BARS WITH A SYMMETRICAL ARRANGEMENT ON TWO OPPOSITE COLUMN FACES. SEE DETAIL NOTED ON COLUMN SCHEDULE FOR BAR ORIENTATION.
   c. x-y="x" BARS ON ONE FACE AND "y" BARS ON OTHER FACE. SEE DETAIL NOTED ON COLUMN SCHEDULE FOR BAR ORIENTATION (EXAMPLE: 4-3=4 BARS ON ONE FACE AND 3 BARS ON OTHER FACE).
   RECTANGULAR COLUMNS:
   a. xE = "x" NUMBER OF BARS WITH A SYMMETICAL ARRANGEMENT ON EACH OF THE COLUMN FACES (EXAMPLE: 4E = 4 BARS ON EACH COLUMN FACE).
   b. xL-yS = "x" NUMBER OF BARS PLACED SYMMETRICALLY ON THE LONG FACE OF THE COLUMN AND "y" NUMBER OF BARS SPACED SYMMETRICALLY ON THE SHORT FACE OF THE COLUMN (EXAMPLE: 2L-3S = 2 BARS EACH LONG FACE, 3 BARS EACH SHORT FACE).
4. COLUMNS EXTENDING ABOVE ROOF LEVEL SHALL HAVE REINFORCEMENT MATCHING THAT CALLED OUT AT THE ROOF LEVEL IN THE COLUMN SCHEDULE, UNLESS NOTED OTHERWISE.

LINK BEAM SCHEDULE

MARK	SIZE	HORIZONTAL REINFORCMENT		STIRRUPS			FACE BARS	REMARKS
	DEPTH	TOP	BOTTOM	SIZE	TYPE	SPACING	EACH FACE	
L1	65	(2)-#6	(2)-#6	#5	S15	2@3/R@12	(3)-#5	
L2	42	(2)-#6	(2)-#6	#5	S15	2@3/R@12	(3)-#5	
L3	42	(2)-#6	(2)-#6	#5	S15	2@3/R@12	(3)-#5	HOOK BARS 90°AT EDGE OF WALL
L4	36	(2)-#6	(2)-#6	#5	S15	2@3/R@10	(3)-#5	
L5	36	(2)-#6	(2)-#6	#5	S15	2@3/R@6	(3)-#5	

NOTES:
1. WIDTH OF LINK BEAM SHALL ALWAYS MATCH WALL THICKNESS. REFER TO S221 FOR SHEAR WALL THICKNESSES.
2. LINK BEAM REINFORCEMENT SHALL EXTEND BEYOND LARGEST ADJACENT OPENING BY A DISTANCE OF Ld. IF DISTANCE BEYOND IS LESS THAT Ld, HOOKED BARS SHALL BE PROVIDED EXTENDING A MINIMUM OF Ldh BEYOND THE OPENINGS. REFER TO S401 AND S402 FOR DEVELOPMENT LENGTH SCHEDULES.
3. BOTTOM OF LINK BEAM TO MATCH TOP OF PILE CAP OF TOP OF ADJACENT OPENING. REFER TO S221 FOR SHEAR WALL ELEVATIONS AND LINK BEAM TAGS.

SYM	ZONE		DATE	APPROVED
		REVISIONS		

WALTER P MOORE
WALTER P. MOORE AND ASSOCIATES, INC.
300 SOUTH ORANGE AVENUE, SUITE 1100
ORLANDO, FLORIDA 32801.8383
PHONE: 407.418.2218 FAX: 407.418.2257
CERTIFICATE OF AUTHORIZATION NO. 3818
S07111009-00
JAIME E. VASQUEZ P.E. NO. 49103
TO THE BEST OF THE ENGINEER'S KNOWLEDGE, THE PLANS AND SPECIFICATIONS COMPLY WITH THE APPLICABLE MINIMUM BUILDING CODES

SIGNATURES	DATE
DRAWN ANDREW MYERS	12.18.13
CHECKED JAIME E. VASQUEZ	12.18.13
SUBMITTED, ARCHIVE OF RECORD JAIME E. VASQUEZ ST of LICENSURE: FL LICENSE NO: 49103	12.18.13
APPROVED OSCAR MORES	12/18/13
BRUCE KINNAIRD	12/19/13

NATIONAL AERONAUTICS AND SPACE ADMINISTRATION
JOHN F. KENNEDY SPACE CENTER, NASA
KENNEDY SPACE CENTER, FLORIDA

KSC CENTRAL CAMPUS
REPLACEMENT HEADQUARTERS BUILDING
PHASE 1
VOL. 1 OF 4

COLUMN SCHEDULE

FILE NO.	SIZE	DWG. NO.	
C-12070.00	F	79K39622 VOL 1	
PCN. NO. 98745.1a		SHEET 140	

S215

NOTICE: When Government drawings, specifications, or other data are used for any purpose other than in connection with a definitely related Government procurement operation, the United States Government thereby incurs no responsibility nor obligation whatsoever; and the fact that the Government may have formulated, furnished, or in any way supplied the said drawings, specifications or other data is not to be regarded by implication or otherwise as in any manner licensing the holder or any other person or corporation, or conveying any rights or permission to manufacture, use, or sell any patented invention that may in any way be related thereto.

NOTES:

1. ALL SHEAR WALLS SHALL HAVE TWO LAYERS OF REINFORCEMENT, UNO.
2. REFER TO MECHANICAL, ELECTRICAL, AND PLUMBING DRAWINGS FOR ADDITIONAL PENETRATIONS THROUGH SHEAR WALLS. REFER TO TYPICAL DETAILS FOR ADDITIONAL REINFORCEMENT REQUIRED AT OPENINGS.

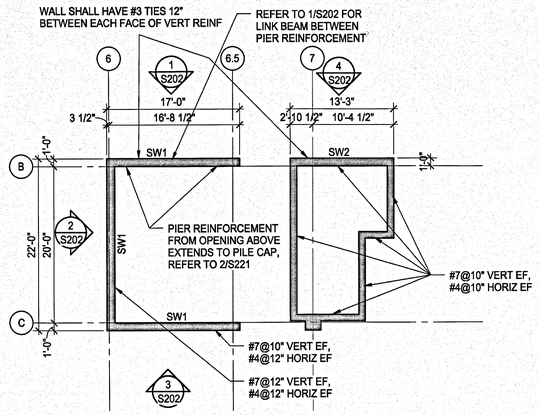

PARTIAL PLAN - SHEARWALL 1 AND 2 - FOUNDATION 1

1/8" = 1'-0"

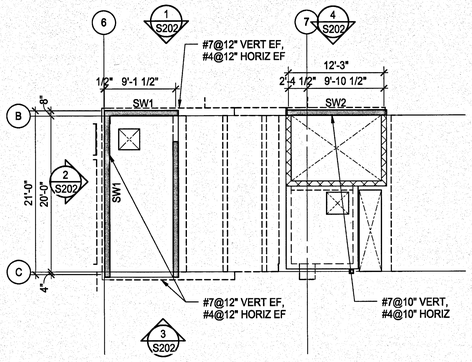

PARTIAL PLAN - SHEARWALL 1 AND 2 - ROOF LEVEL 4

1/8" = 1'-0"

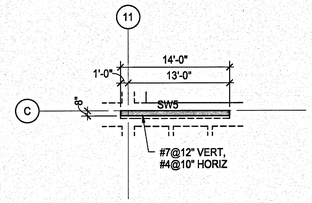

PARTIAL PLAN - SHEARWALL 5 - ROOF LEVEL 7

1/8" = 1'-0"

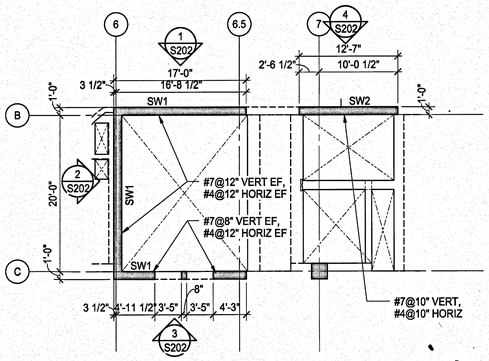

PARTIAL PLAN - SHEARWALL 1 AND 2 - 1ST LEVEL 2

1/8" = 1'-0"

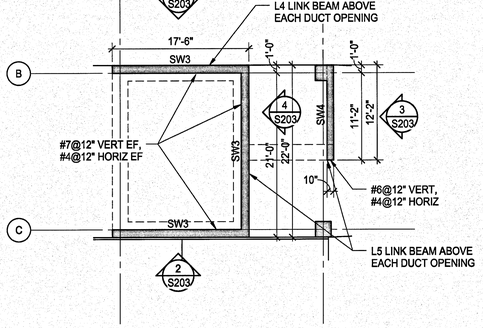

PARTIAL PLAN - SHEARWALL 3 AND 4 5

1/8" = 1'-0"

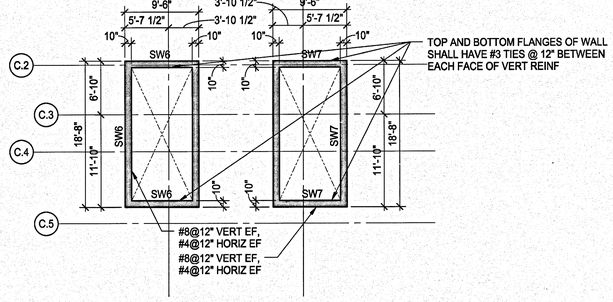

PARTIAL PLAN - SHEARWALL 6 AND 7 - FOUNDATION 8

1/8" = 1'-0"

PARTIAL PLAN - SHEARWALL 1 AND 2 - 2ND-6TH LEVEL (7TH LEVEL SIMILAR) 3

1/8" = 1'-0"

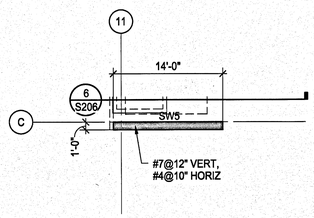

PARTIAL PLAN - SHEARWALL 5 FOUNDATION-7TH LEVEL 6

1/8" = 1'-0"

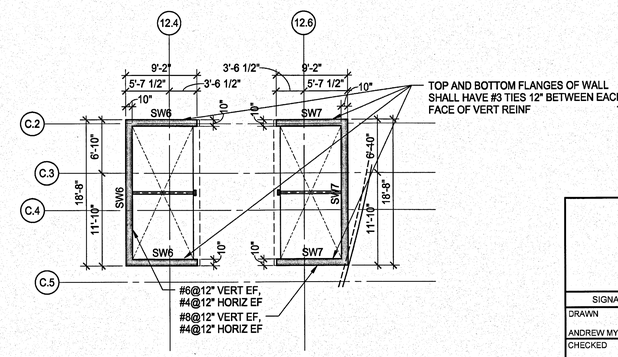

PARTIAL PLAN - SHEARWALL 6 AND 7 1ST LEVEL-ROOF LEVEL 9

1/8" = 1'-0"

SYM	ZONE	REVISIONS	DATE	APPROVED

WALTER P MOORE
WALTER P. MOORE AND ASSOCIATES, INC.
300 SOUTH ORANGE AVENUE, SUITE 1100
ORLANDO, FLORIDA 32801.3382
PHONE: 407.418.2218 FAX: 407.418.2267
CERTIFICATE OF AUTHORIZATION NO. 3616
007-11023-00
JAIME E. VASQUEZ P.E. NO. 49103
TO THE BEST OF THE ENGINEER'S KNOWLEDGE, THE PLANS AND SPECIFICATIONS COMPLY WITH THE APPLICABLE MINIMUM BUILDING CODES

SIGNATURES	DATE
DRAWN	
ANDREW MYERS	12.18.13
CHECKED	
JAIME E. VASQUEZ	12.18.13
SUBMITTED AS RECORD	
JAIME E. VASQUEZ	12.18.13
ST of LICENSURE: FL	
LICENSE NO: 49103	
APPROVED	
BRUCE KINNAIRD	12/18/13

NATIONAL AERONAUTICS AND SPACE ADMINISTRATION
JOHN F. KENNEDY SPACE CENTER, NASA
KENNEDY SPACE CENTER, FLORIDA

KSC CENTRAL CAMPUS
REPLACEMENT HEADQUARTERS BUILDING
PHASE 1
VOL. 1 OF 4

SHEARWALL PARTIAL PLANS

FILE NO.	SIZE	DWG. NO.
C-12070.00	F	79K39622 VOL 1
PCN. NO. 98745.1a		SHEET 141

S221

NOTICE: When Government drawings, specifications, or other data are used for any purpose other than in connection with a definitely related Government procurement operation, the United States Government thereby incurs no responsibility nor obligation whatsoever; and the fact that the Government may have formulated, furnished, or in any way supplied the said drawings, specifications or other data is not to be regarded by implication or otherwise as in any manner licensing the holder or any other person or corporation, or conveying any rights or permission to manufacture, use, or sell any patented invention that may in any way be related thereto.

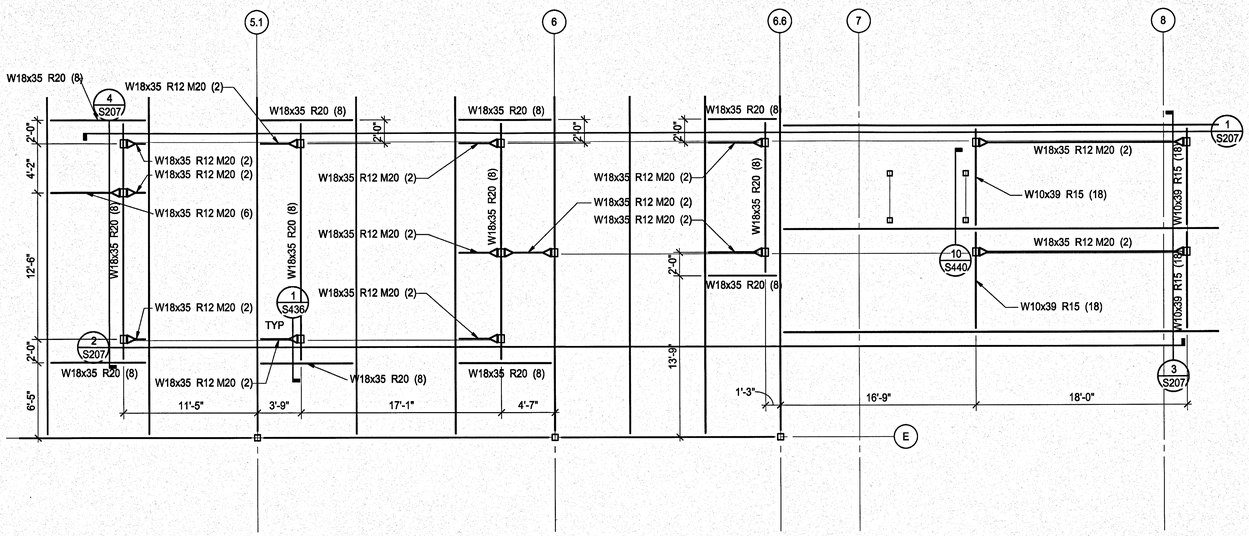

2ND LEVEL ROOF PARTIAL 1
3/16" = 1'-0"

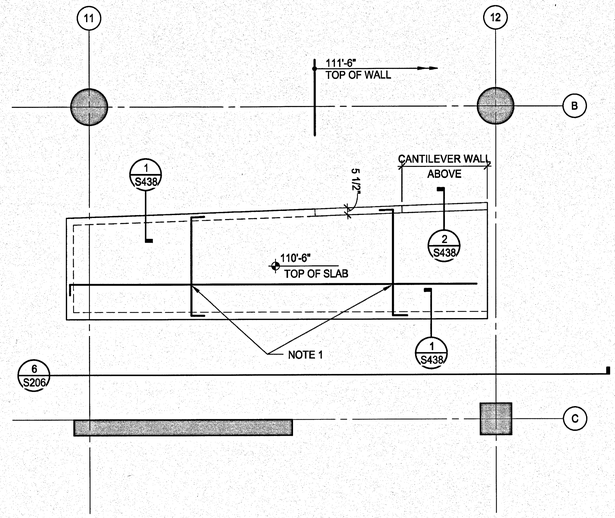

EAST STAIR ROOF/ PARTIAL PLAN 3
1/4" = 1'-0"

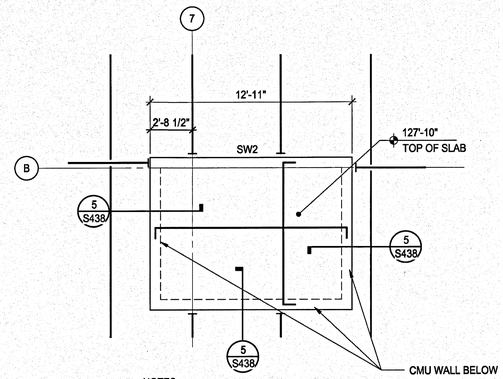

NOTES:
1. SLAB CONSTRUCTION SHALL BE NORMAL WEIGHT CONCRETE SLAB REINFORCED WITH #4@12 EACH WAYTOP AND BOTTOM.

SHEAR WALL 2 ROOF SLAB PARTIAL PLAN 5
1/4" = 1'-0"

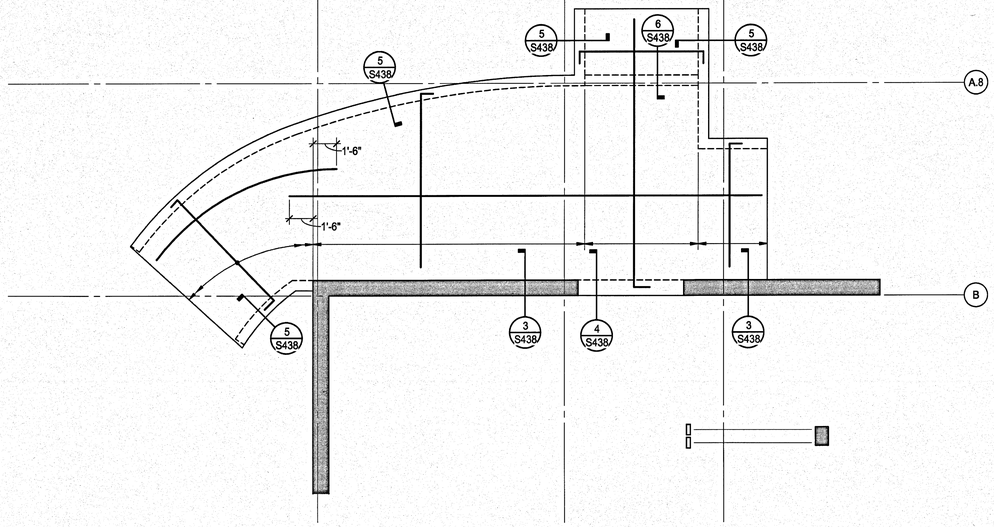

NOTES:
1. SLAB CONSTRUCTION SHALL BE 7" THICK NORMAL WEIGHT CONCRETE SLAB REINFORCED WITH #4@12" EACH WAY TOP AND BOTTOM.

GROUND FLOOR LOBBY ROOF SLAB PARTIAL PLAN 2
1/4" = 1'-0"

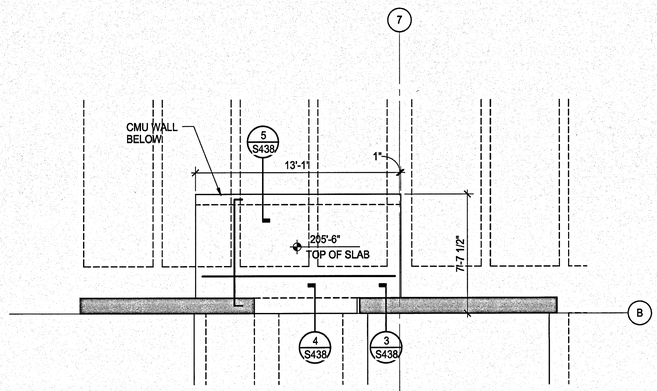

NOTES:
1. SLAB CONSTRUCTION SHALL BE 7" NORMAL WEIGHT CONCRETE SLAB REINFORCED WITH #4@12" EACH WAY CENTERED IN SLAB DEPTH.

FLOOR FRAMING PLAN - 7TH LEVEL 4
1/4" = 1'-0"

SIGNATURES	DATE
DRAWN ANDREW MYERS	12.18.13
CHECKED JAIME E. VASQUEZ	12.18.13
SUBMITTED, AS NOTED ON RECORD JAIME E. VASQUEZ ST of LICENSURE: FL LICENSE NO: 49103	12-18-13
APPROVED JOSEPH M. ACES	12/18/13
BRUCE KINNAIRD	12/18/13

S231

SYM | ZONE | DATE | APPROVED

REVISIONS

WALTER P MOORE
WALTER P. MOORE AND ASSOCIATES, INC.
500 SOUTH ORANGE AVENUE, SUITE 1100
ORLANDO, FLORIDA 32801.3382
PHONE: 407.418.2218 FAX: 407.418.2267
CERTIFICATE OF AUTHORIZATION NO. 3616
507-11023-00
JAIME E. VASQUEZ P.E. NO. 49103
TO THE BEST OF THE ENGINEER'S KNOWLEDGE, THE PLANS AND SPECIFICATIONS COMPLY WITH THE APPLICABLE MINIMUM BUILDING CODES

NATIONAL AERONAUTICS AND SPACE ADMINISTRATION
JOHN F. KENNEDY SPACE CENTER, NASA
KENNEDY SPACE CENTER, FLORIDA

KSC CENTRAL CAMPUS
REPLACEMENT HEADQUARTERS BUILDING
PHASE 1
VOL. 1 OF 4

FRAMING PARTIAL PLANS

FILE NO.	SIZE	DWG. NO.
C-12070.00	F	79K39622 VOL 1

PCN. NO. 98745.1a | SHEET 142

NOTICE: When Government drawings, specifications, or other data are used for any purpose other than in connection with a definitely related Government procurement operation, the United States Government thereby incurs no responsibility nor obligation whatsoever; and the fact that the Government may have formulated, furnished, or in any way supplied the said drawings, specifications or other data is not to be regarded by implication or otherwise as in any manner licensing the holder or any other person or corporation, or conveying any rights or permission to manufacture, use, or sell any patented invention that may in any way be related thereto.

CLASSES OF CONCRETE MATRIX

CONCRETE USAGE	MINIMUM COMPRESSIVE STRENGTH [f'c]	CONCRETE TYPE	EXPOSURE CLASSES	MAXIMUM W/CM RATIO	PERMISSIBLE AIR CONTENT	REQUIRED CEMENT REPLACEMENT	MAXIMUM AGGREGATE SIZE	ADDITIONAL REMARKS
SHALLOW FOUNDATIONS								
GRADE BEAMS	4,000 PSI AT 56 DAYS	NWC	C1	N/A	N/A	40-70%	1"	
SHEAR WALL FOUNDATIONS	4,000 PSI AT 56 DAYS	NWC	C1	N/A	N/A	40-70%	1-1/2"	
PLINTHS, SUPPORTING STEEL COLUMNS	4,000 PSI AT 28 DAYS	NWC	C1	0.48	N/A	25-50%	1"	
PLINTHS, SUPPORTING CONCRETE COLUMNS	5,000 PSI AT 28 DAYS	NWC	C1	0.48	N/A	25-50%	1"	
PLINTHS, ALL OTHERS	4,000 PSI AT 28 DAYS	NWC	C1	0.48	N/A	25-50%	1"	
SPREAD FOOTINGS	4,000 PSI AT 56 DAYS	NWC	C1	N/A	N/A	40-70%	1-1/2"	
FOUNDATION WALLS								
SHEAR WALLS	6,000 PSI AT 28 DAYS	NWC	C1	0.48	N/A	25-50%	1"	
RETAINING WALLS	4,000 PSI AT 28 DAYS	NWC	C1	0.48	N/A	25-50%	1"	
ALL OTHER FOUNDATION WALLS	4,000 PSI AT 28 DAYS	NWC	C1	0.48	N/A	25-50%	1"	
SLABS-ON-GRADE								
ALL SLABS-ON-GRADE	4,000 PSI AT 28 DAYS	NWC	C1	0.45	N/A	0-50%	1-1/2"	
FLOOR/ROOF FRAMING								
ELEVATED FLOOR SYSTEMS	5,000 PSI AT 28 DAYS	NWC	C1	0.45	N/A	15-50%	1"	
TOPPING SLAB, ALL OTHERS	3,000 PSI AT 28 DAYS	NWC	C1	0.45	N/A	0-50%	3/4"	
COLUMNS								
CAST-IN-PLACE COLUMNS	6,000 PSI AT 28 DAYS	NWC	C1	0.48	N/A	25-50%	1"	
WALLS								
PILASTERS IN WALLS	6,000 PSI AT 28 DAYS	NWC	C1	0.48	N/A	25-50%	1"	
PRECAST WALLS	5,000 PSI AT 28 DAYS	NWC	C1	0.48	N/A	0-50%	1"	
SHEAR WALLS	6,000 PSI AT 28 DAYS	NWC	C1	0.48	N/A	25-50%	1"	
VEHICLE BARRIER WALLS	4,000 PSI AT 28 DAYS	NWC	C1	N/A	N/A	25-50%	1"	

NOTES:

1. ALL CONCRETE SHALL BE CONSIDERED TO BE IN EXPOSURE CLASS F0, S0, P0, AND C0 ACCORDING TO ACI 318-08 UNLESS NOTED OTHERWISE IN TABLE ABOVE, IN NOTES BELOW, OR ELSEWHERE ON THE STRUCTURAL DRAWINGS.
2. CONCRETE NOTED ABOVE OR ON PLAN TO BE IN EXPOSURE CLASSES F1, F2, F3, S1, S2, S3, P1, C1, OR C2 SHALL BE PROPORTIONED TO COMPLY WITH ACI 318-08 TABLES 4.3.1, 4.4.1, AND 4.4.2 IN ADDITION TO THE NOTATIONS IN THE TABLE ABOVE AND THE STRICTER REQUIREMENTS SHALL GOVERN. REFER TO THE SPECIFICATIONS FOR OTHER REQUIREMENTS FOR VARIOUS EXPOSURE CLASSES RELATIVE TO CEMENT TYPE, AIR ENTRAINMENT REQUIREMENTS, CHLORIDE ION LIMITS, AND POZZOLAN LIMITS.
3. WHERE INDICATED IN THE "ADDITIONAL REMARKS" COLUMN OF THE TABLE ABOVE, CONCRETE SHALL BE PROPORTIONED FOR A MAXIMUM ALLOWABLE UNIT SHRINKAGE OF 0.035% MEASURED AT 28 DAYS AFTER CURING IN LIME WATER AS DETERMINED BY ASTM C157, USING AIR STORAGE.

SLAB TENSION DEVELOPMENT AND LAP SPLICE LENGTHS
GRADE 60 REINFORCEMENT, NORMALWEIGHT CONCRETE

BAR SIZE	LAP CLASS	f'c = 3000 PSI		f'c = 4000 PSI		f'c = 5000 PSI		f'c = 6000 PSI	
		BOTTOM BARS	OTHER BARS	BOTTOM BARS	OTHER BARS	BOTTOM BARS	OTHER BARS	BOTTOM BARS	OTHER BARS
#3	A	12	13	12	12	12	12	12	12
	B	16	17	16	16	16	16	16	16
#4	A	17	22	15	19	13	17	12	16
	B	23	29	20	25	17	23	16	21
#5	A	25	32	21	28	19	25	18	23
	B	33	42	28	37	25	33	24	30
#6	A	33	43	29	37	26	34	24	31
	B	43	56	38	49	34	45	32	41
#7	A	53	69	46	60	42	54	38	49
	B	69	90	60	78	55	71	50	64
#8	A	66	86	57	74	51	67	47	61
	B	86	112	75	97	67	88	62	80
#9	A	80	104	69	90	62	81	57	74
	B	104	136	90	117	81	106	75	97
#10	A	96	125	83	108	75	97	68	88
	B	125	163	108	141	98	127	89	115
#11	A	113	146	98	127	87	114	80	104
	B	147	190	128	166	114	149	104	136

00860-FL-DELSP-03
© COPYRIGHT WALTER P. MOORE AND ASSOCIATES, INC. 2009

NOTES:

1. ALL SPLICE LENGTHS ARE IN INCHES.
2. THIS TABLE SHALL BE USED FOR SLABS ONLY. REFER TO OTHER DEVELOPMENT LENGTH TABLES FOR OTHER MEMBERS.
3. THE TENSION DEVELOPMENT LENGTH (Ld) IS EQUAL TO THE SCHEDULED "CLASS A" LAP SPLICE LENGTH.
4. A BOTTOM BAR IS DEFINED AS ANY BAR THAT DOES NOT HAVE MORE THAN 12" OF FRESH CONCRETE BELOW THE BAR.
5. OTHER BARS INCLUDE TOP BARS AND ALL OTHER BARS THAT HAVE MORE THAN 12" OF FRESH CONCRETE BELOW THE BAR. FOR TOP REINFORCEMENT IN SLABS THAT ARE 12" THICK OR LESS, TABULATED SPLICE LENGTHS FOR BOTTOM BARS SHALL BE USED.
6. FOR EPOXY-COATED BARS, MULTIPLY THE TABULATED SPLICE LENGTHS OF BOTTOM BARS BY 1.5 AND THE TABULATED SPLICE LENGTHS OF OTHER BARS BY 1.3.
7. WHEN LAP SPLICING BARS OF DIFFERENT SIZES, THE LAP LENGTH IS DETERMINED BY THE SMALLER BAR BUT MAY NOT BE LESS THAN THE "CLASS A" SPLICE LENGTH OF THE LARGER BAR.

TYPICAL SLAB TENSION DEVELOPMENT AND LAP SPLICE LENGTHS (3)

NO SCALE

COMPRESSION DEVELOPMENT AND LAP SPLICE LENGTHS
GRADE 60 REINFORCEMENT

BAR SIZE	DEVELOPMENT LENGTH				LAP LENGTH
	f'c=3000 PSI	f'c=4000 PSI	f'c=5000 PSI	f'c=6000 PSI	ALL f'c
#3	9	8	8	8	12
#4	11	10	9	9	15
#5	14	12	12	12	19
#6	17	15	14	14	23
#7	20	17	16	16	27
#8	22	19	18	18	30
#9	25	22	21	21	34
#10	28	25	23	23	39
#11	31	27	26	26	43

NOTES:

1. ALL SPLICE LENGTHS ARE IN INCHES.
2. DEVELOPMENT LENGTHS LISTED ABOVE SHALL ONLY BE USED FOR BAR END TERMINATIONS (NOT LAPS) SPECIFICALLY DESIGNATED AS COMPRESSION BARS.
3. LAP LENGTHS LISTED ABOVE SHALL ONLY BE USED FOR BAR LAP SPLICES SPECIFICALLY DESIGNATED AS COMPRESSION SPLICES.
4. IF BAR TERMINATIONS OR SPLICES ARE NOT SPECIFICALLY DESIGNATED AS COMPRESSION, THE APPROPRIATE TENSION DEVELOPMENT LENGTH SHALL BE USED.
5. WHEN BARS OF DIFFERENT SIZE ARE LAP SPLICED, THE SPLICE LENGTH SHALL BE THE LARGER OF EITHER THE DEVELOPMENT LENGTH OF THE LARGER BAR OR THE LAP LENGTH OF THE SMALLER BAR.
6. LENGTHS LISTED ARE VALID FOR BOTH NORMALWEIGHT AND LIGHTWEIGHT CONCRETE.

00860-CL-COMDL-01
© COPYRIGHT WALTER P. MOORE AND ASSOCIATES, INC. 2009

TYPICAL COMPRESSION DEVELOPMENT AND LAP SPLICE LENGTHS (9)

NO SCALE

WALL VERTICAL BAR TENSION DEVELOPMENT AND LAP SPLICE LENGTHS
GRADE 60 REINFORCEMENT, NORMALWEIGHT CONCRETE

BAR SIZE	LAP CLASS	f'c = 3000 PSI		f'c = 4000 PSI		f'c = 5000 PSI		f'c = 6000 PSI	
		CATEGORY 1	CATEGORY 2	CATEGORY 1	CATEGORY 2	CATEGORY 1	CATEGORY 2	CATEGORY 1	CATEGORY 2
#4	A	17	17	15	15	15	15	15	15
	B	22	22	19	19	17	17	16	16
#5	A	21	25	19	21	19	19	19	19
	B	27	32	24	28	21	25	19	23
#6	A	25	33	23	29	23	26	23	24
	B	33	43	28	37	25	34	23	31
#7	A	41	48	35	42	32	38	29	34
	B	53	63	46	54	41	49	38	45
#8	A	51	55	44	48	40	43	36	39
	B	66	72	57	62	51	56	47	51
#9	A	62	62	54	54	48	48	44	44
	B	81	81	70	70	63	63	57	57
#10	A	71	71	61	61	55	55	50	50
	B	92	92	80	80	71	71	65	65
#11	A	84	84	73	73	65	65	60	60
	B	109	109	95	95	85	85	77	77

00860-WL-DELSP-02
© COPYRIGHT WALTER P. MOORE AND ASSOCIATES, INC. 2009

NOTES:

1. ALL SPLICE LENGTHS ARE IN INCHES.
2. THIS TABLE SHALL BE USED FOR WALL VERTICAL BARS ONLY. REFER TO OTHER DEVELOPMENT LENGTH TABLES FOR WALL HORIZONTAL BARS AND OTHER MEMBERS.
3. THE TENSION DEVELOPMENT LENGTH (Ld) IS EQUAL TO THE SCHEDULED "CLASS A" LAP SPLICE LENGTH.
4. FOR DETERMINING THE BAR CATEGORY, "db" IS DEFINED AS THE DIAMETER OF THE LARGER BAR BEING SPLICED.
5. THE "CATEGORY 1" LAP LENGTH SHALL BE USED WHEN THE CLEAR SPACING BETWEEN BARS AT THE SPLICE IS EQUAL TO OR GREATER THAN 3db.
6. THE "CATEGORY 2" LAP LENGTH SHALL BE USED WHEN THE CLEAR SPACING BETWEEN BARS AT THE SPLICE IS LESS THAN 3db AND GREATER THAN 2db.
7. WHEN THE CLEAR SPACING BETWEEN BARS AT THE SPLICE IS EQUAL TO OR LESS THAN 2db, SPLICES SHALL BE STAGGERED SO THAT NO MORE THAN 50% OF BARS ARE SPLICED AT ANY GIVEN LOCATION. REFER TO "TYPICAL CLEAR SPACING CRITERIA OF LAP SPLICED BARS, STAGGERED SPLICES" FOR CRITERIA TO DETERMINE CLEAR SPACING "S" FOR BARS AT STAGGERED SPLICES.
8. FOR EPOXY-COATED BARS, MULTIPLY THE TABULATED SPLICE LENGTHS BY 1.5.
9. WHEN LAP SPLICING BARS OF DIFFERENT SIZES, THE LAP LENGTH IS DETERMINED BY THE SMALLER BAR BUT MAY NOT BE LESS THAN THE "CLASS A" SPLICE LENGTH OF THE LARGER BAR.

TYPICAL WALL VERTICAL BAR TENSION DEVELOPMENT AND LAP SPLICE LENGTHS (1)

NO SCALE

WALL HORIZONTAL BAR
TENSION DEVELOPMENT AND LAP SPLICE LENGTHS
GRADE 60 REINFORCEMENT, NORMALWEIGHT CONCRETE

BAR SIZE	LAP CLASS	f'c = 3000 PSI	f'c = 4000 PSI	f'c = 5000 PSI	f'c = 6000 PSI
#3	A	13	12	12	12
	B	17	16	16	16
#4	A	22	19	17	16
	B	29	25	23	21
#5	A	32	28	25	23
	B	42	37	33	30
#6	A	43	37	34	31
	B	56	49	45	41
#7	A	69	60	54	49
	B	90	78	71	64
#8	A	86	74	67	61
	B	112	97	88	80
#9	A	104	90	81	74
	B	136	117	106	97
#10	A	125	108	97	88
	B	163	141	127	115
#11	A	146	127	114	104
	B	190	166	149	136

00860-WL-DELSP-01
© COPYRIGHT WALTER P. MOORE AND ASSOCIATES, INC. 2009

NOTES:

1. ALL SPLICE LENGTHS ARE IN INCHES.
2. THIS TABLE SHALL BE USED FOR WALL HORIZONTAL BARS ONLY. REFER TO OTHER DEVELOPMENT LENGTH TABLES FOR WALL VERTICAL BARS AND OTHER MEMBERS.
3. THE TENSION DEVELOPMENT LENGTH (Ld) IS EQUAL TO THE SCHEDULED "CLASS A" LAP SPLICE LENGTH.
4. FOR EPOXY-COATED BARS, MULTIPLY THE TABULATED SPLICE LENGTHS BY 1.3.
5. WHEN LAP SPLICING BARS OF DIFFERENT SIZES, THE LAP LENGTH IS DETERMINED BY THE SMALLER BAR BUT MAY NOT BE LESS THAN THE "CLASS A" SPLICE LENGTH OF THE LARGER BAR.

TYPICAL WALL HORIZONTAL BAR TENSION DEVELOPMENT AND LAP SPLICE LENGTHS (7)

NO SCALE

COLUMN TENSION DEVELOPMENT AND LAP SPLICE LENGTHS
GRADE 60 REINFORCEMENT, NORMALWEIGHT CONCRETE

BAR SIZE	LAP CLASS	f'c = 3000 PSI		f'c = 4000 PSI		f'c = 5000 PSI		f'c = 6000 PSI	
		CATEGORY 1	CATEGORY 2	CATEGORY 1	CATEGORY 2	CATEGORY 1	CATEGORY 2	CATEGORY 1	CATEGORY 2
#5	A	19	21	19	19	19	19	19	19
	B	24	27	21	24	19	21	19	19
#6	A	23	30	23	26	23	23	23	23
	B	30	38	26	33	23	30	23	27
#7	A	33	44	29	38	27	34	27	31
	B	43	57	37	49	33	44	31	40
#8	A	39	52	34	45	30	40	30	37
	B	50	67	43	58	39	52	36	47
#9	A	44	59	38	51	34	46	34	42
	B	57	76	50	66	45	59	41	54
#10	A	51	66	44	57	39	51	39	47
	B	66	85	57	74	51	66	47	60
#11	A	57	71	49	62	44	55	43	51
	B	74	92	64	80	57	72	52	66

00860-CL-DELSP-01
© COPYRIGHT WALTER P. MOORE AND ASSOCIATES, INC. 2009

NOTES:

1. ALL SPLICE LENGTHS ARE IN INCHES.
2. THIS TABLE SHALL BE USED FOR COLUMNS ONLY. REFER TO OTHER DEVELOPMENT LENGTH TABLES FOR OTHER MEMBERS.
3. THE TENSION DEVELOPMENT LENGTH (Ld) IS EQUAL TO THE SCHEDULED "CLASS A" LAP SPLICE LENGTH.
4. FOR DETERMINING THE BAR CATEGORY, "db" IS DEFINED AS THE DIAMETER OF THE LARGER BAR BEING SPLICED.
5. THE "CATEGORY 1" LAP LENGTH SHALL BE USED WHEN THE CLEAR SPACING BETWEEN BARS AT THE SPLICE IS EQUAL TO OR GREATER THAN 3db.
6. THE "CATEGORY 2" LAP LENGTH SHALL BE USED WHEN THE LEAR SPACING BETWEEN BARS AT THE SPLICE IS LESS THAN db AND GREATER THAN 2db.
7. WHEN THE CLEAR SPACING BETWEEN BARS AT THE SPLICE IS EQUAL TO OR LESS THAN 2db, SPLICES SHALL BE TAGGERED SO THAT NO MORE THAN 50% OF BARS ARE PLICED AT ANY GIVEN LOCATION. REFER TO "TYPICAL CLEAR SPACING CRITERIA OF LAP SPLICED BARS, STAGGERED SPLICES" FOR CRITERIA TO DETERMINE CLEAR SPACING "S" OR BARS AT STAGGERED SPLICES.
8. IN CASES WHERE BAR SPACING IS NOT THE SAME AT DIFFERENT COLUMN FACES, THE SMALLER SPACING SHALL BE USED TO DETERMINE THE APPLICABLE SPLICE ATEGORY.
9. FOR EPOXY-COATED BARS, MULTIPLY THE TABULATED PLICE LENGTHS BY 1.5.
10. WHEN LAP SPLICING BARS OF DIFFERENT SIZES, THE LAP LENGTH IS DETERMINED BY THE SMALLER BAR BUT MAY NOT BE LESS THAN THE "CLASS A" SPLICE LENGTH OF THE LARGER BAR.

TYPICAL COLUMN TENSION DEVELOPMENT AND LAP SPLICE LENGTHS (2)

NO SCALE

BEAM AND GIRDER TENSION DEVELOPMENT AND LAP SPLICE LENGTHS
GRADE 60 REINFORCEMENT, NORMALWEIGHT CONCRETE

BAR SIZE	LAP CLASS	f'c = 3000 PSI		f'c = 4000 PSI		f'c = 5000 PSI		f'c = 6000 PSI	
		BOTTOM BARS	OTHER BARS	BOTTOM BARS	OTHER BARS	BOTTOM BARS	OTHER BARS	BOTTOM BARS	OTHER BARS
#3	A	12	13	12	12	12	12	12	12
	B	16	17	16	16	16	16	16	16
#4	A	16	20	14	18	12	16	12	15
	B	21	26	19	24	16	21	16	20
#5	A	23	29	20	25	18	23	16	21
	B	30	38	26	33	24	30	21	28
#6	A	31	40	27	35	24	31	22	28
	B	41	52	36	46	32	41	29	37
#7	A	46	60	40	52	36	46	33	42
	B	60	78	52	68	47	60	43	55
#8	A	60	78	52	67	46	60	42	55
	B	78	102	68	88	60	78	55	72
#9	A	64	84	56	72	50	65	46	59
	B	84	110	73	94	65	85	60	77
#10	A	72	93	62	81	56	72	51	66
	B	94	121	81	106	73	94	67	86
#11	A	85	110	74	96	66	86	60	78
	B	111	143	97	125	86	112	78	102

00860-FL-DELSP-01
© COPYRIGHT WALTER P. MOORE AND ASSOCIATES, INC. 2009

NOTES:

1. ALL SPLICE LENGTHS ARE IN INCHES.
2. THIS TABLE SHALL BE USED FOR BEAMS AND GIRDERS ONLY. REFER TO OTHER DEVELOPMENT LENGTH TABLES FOR OTHER MEMBERS.
3. THE TENSION DEVELOPMENT LENGTH (Ld) IS EQUAL TO THE SCHEDULED "CLASS A" LAP SPLICE LENGTH.
4. A BOTTOM BAR IS DEFINED AS ANY BAR THAT DOES NOT HAVE MORE THAN 12" OF FRESH CONCRETE BELOW THE BAR.
5. OTHER BARS INCLUDE TOP BARS, FACE BARS, AND ALL OTHER BARS THAT HAVE MORE THAN 12" OF FRESH CONCRETE BELOW THE BAR.
6. FOR EPOXY-COATED BARS, MULTIPLY THE TABULATED SPLICE LENGTHS OF BOTTOM BARS BY 1.5 AND THE TABULATED SPLICE LENGTHS OF OTHER BARS BY 1.3.
7. WHEN LAP SPLICING BARS OF DIFFERENT SIZES, THE LAP LENGTH IS DETERMINED BY THE SMALLER BAR BUT MAY NOT BE LESS THAN THE "CLASS A" SPLICE LENGTH OF THE LARGER BAR.

TYPICAL BEAM AND GIRDER TENSION DEVELOPMENT AND LAP SPLICE LENGTHS (8)

NO SCALE

SYM	ZONE	REVISIONS	DATE	APPROVED

WALTER P MOORE
WALTER P. MOORE AND ASSOCIATES, INC.
300 SOUTH ORANGE AVENUE, SUITE 1150
ORLANDO, FLORIDA 32801.3332
PHONE: 407.418.2218 FAX: 407.418.2257
CERTIFICATE OF AUTHORIZATION NO. 3818
S07-11023-00
JAIME E. VASQUEZ P.E. NO. 49103
TO THE BEST OF THE ENGINEER'S KNOWLEDGE, THE PLANS AND SPECIFICATIONS COMPLY WITH THE APPLICABLE MINIMUM BUILDING CODES

SIGNATURES	DATE
DRAWN ANDREW MYERS	12.18.13
CHECKED JAIME E. VASQUEZ	12.18.13
SUBMITTED: ARCH/ENG OF RECORD JAIME E. VASQUEZ	12.18.13
ST of LICENSURE: FL LICENSE NO: 49103	
APPROVED JOSEPH M. ALES	12/18/13
BRUCE KINNAIRD	12/18/13

NATIONAL AERONAUTICS AND SPACE ADMINISTRATION
JOHN F. KENNEDY SPACE CENTER, NASA
KENNEDY SPACE CENTER, FLORIDA

KSC CENTRAL CAMPUS
REPLACEMENT HEADQUARTERS BUILDING
PHASE 1
VOL. 1 OF 4

CONCRETE TYPICAL DETAILS

S401

FILE NO. C-12070.00 | SIZE F | DWG. NO. 79K39622 VOL 1
PCN. NO. 98745.1a | SHEET 143

NOTICE: When Government drawings, specifications, or other data are used for any purpose other than in connection with a definitely related Government procurement operation, the United States Government thereby incurs no responsibility nor obligation whatsoever; and the fact that the Government may have formulated, furnished, or in any way supplied the said drawings, specifications or other data is not to be regarded by implication or otherwise as in any manner licensing the holder or any other person or corporation, or conveying any rights or permission to manufacture, use, or sell any patented invention that may in any way be related thereto.

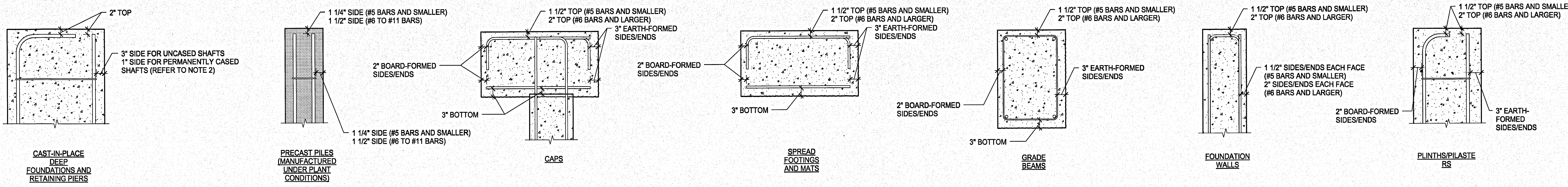

NOTES:
1. REFER TO "NOTES FOR TYPICAL CLEAR CONCRETE COVER FOR REINFORCING STEEL" FOR ADDITIONAL INFORMATION.
2. SIDE COVER FOR DEEP FOUNDATIONS CAST INSIDE OF STEEL CASING SHALL BE MEASURED FROM INSIDE FACE OF CASING.
3. FOR PRECAST ELEMENTS NOT MANUFACTURED UNDER PLANT CONDITIONS, COVERS NOTED FOR CAST-IN-PLACE ELEMENTS SHALL BE USED.

TYPICAL CLEAR CONCRETE COVER FOR REINFORCING STEEL IN FOUNDATION ELEMENTS (1)

NO SCALE

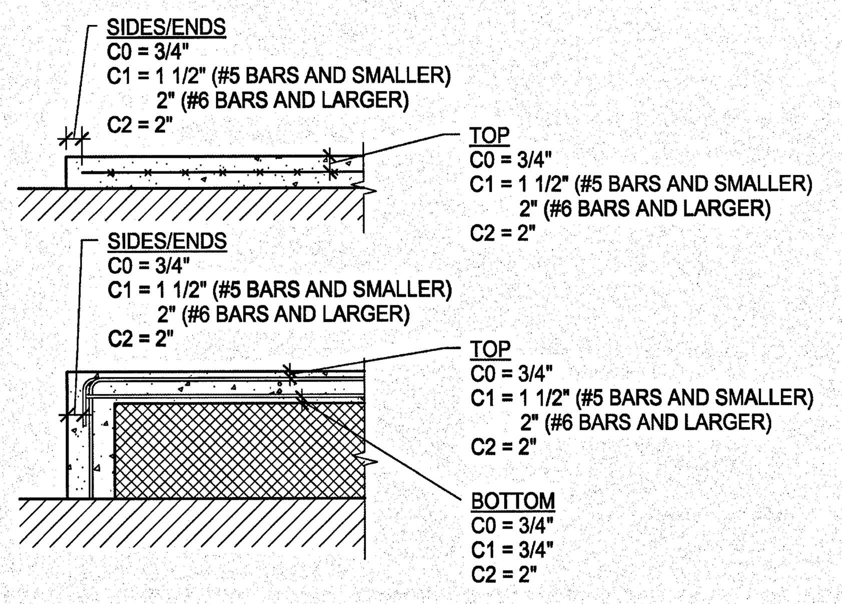

NOTES:
1. REFER TO "NOTES FOR TYPICAL CLEAR CONCRETE COVER FOR REINFORCING STEEL" FOR ADDITIONAL INFORMATION.

TYPICAL CLEAR CONCRETE COVER FOR REINFORCING STEEL IN TOPPING SLABS (2)

NO SCALE

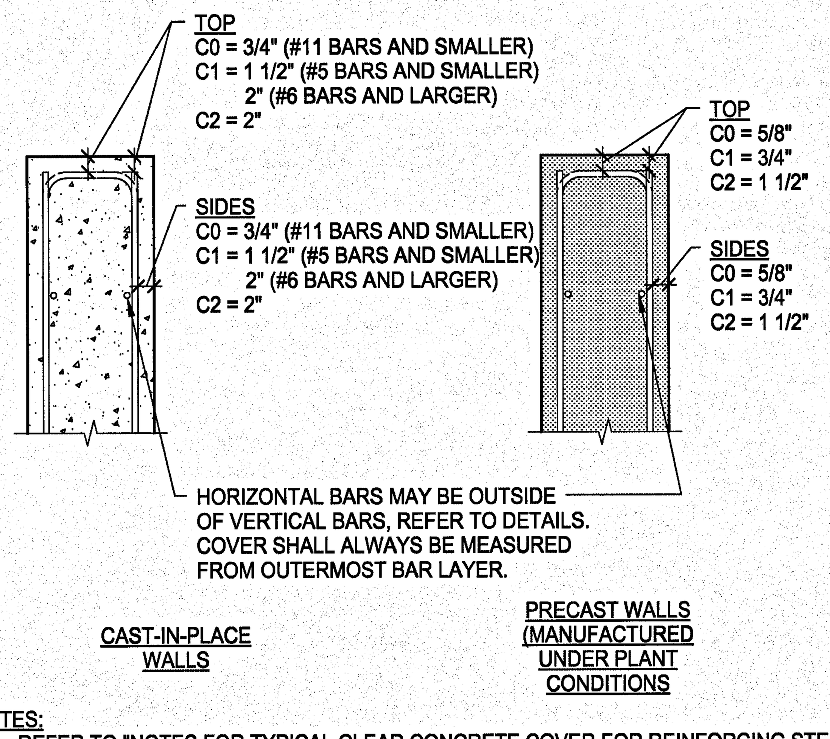

NOTES:
1. REFER TO "NOTES FOR TYPICAL CLEAR CONCRETE COVER FOR REINFORCING STEEL" FOR ADDITIONAL INFORMATION.
2. FOR TILT-UP WALLS AND PRECAST WALLS NOT MANUFACTURED UNDER PLANT CONDITIONS, COVERS NOTED FOR CAST-IN-PLACE WALLS SHALL BE USED.

TYPICAL CLEAR CONCRETE COVER FOR REINFORCING STEEL IN WALLS (5)

NO SCALE

DEVELOPMENT LENGTHS OF STANDARD HOOKS IN TENSION GRADE 60 REINFORCEMENT, NORMALWEIGHT CONCRETE													
BAR SIZE	f'c=3000 PSI		f'c=4000 PSI		f'c=5000 PSI		f'c=6000 PSI		f'c=7000 PSI		f'c=8000 PSI		BAR SIZE
	Lhb	0.7 Lhb	Lhb	0.7 Lhb	Lhb	0.7 Lhb	Lhb	0.7 Lhb	Lhb	0.7 Lhb	Lhb	0.7 Lhb	
#3	9	7	8	6	7	6	6	6	6	6	6	6	#3
#4	11	8	10	7	9	7	8	6	8	6	7	6	#4
#5	14	10	12	9	11	8	10	7	9	7	9	7	#5
#6	17	12	15	11	13	10	12	9	11	8	11	8	#6
#7	20	14	17	12	15	11	14	10	13	10	12	9	#7
#8	22	16	19	14	17	12	16	12	15	11	14	10	#8
#9	25	18	22	16	20	14	18	13	17	12	16	12	#9
#10	28	20	25	18	22	16	20	14	19	14	18	13	#10
#11	31	22	27	19	24	17	22	16	21	15	19	14	#11
#14	38	-	33	-	29	-	27	-	25	-	23	-	#14
#18	50	-	43	-	39	-	35	-	33	-	31	-	#18

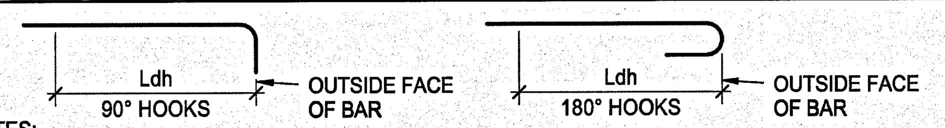

NOTES:
1. Ldh = DEVELOPMENT LENGTH OF STANDARD HOOKS IN TENSION (INCHES).
2. Ldh = Lhb UNLESS CONDITIONS OF NOTE 3 ARE SATISFIED.
3. Ldh = 0.7Lhb FOR #11 BARS AND SMALLER WHEN SIDE COVER (NORMAL TO PLANE OF HOOK) IS NOT LESS THAN 2 1/2 INCHES AND FOR 90° HOOKS COVER ON BAR EXTENSION BEYOND HOOK IS NOT LESS THAN 2 INCHES.
4. HOOKS ARE NOT CONSIDERED EFFECTIVE FOR DEVELOPING BARS IN COMPRESSION.
5. Ldh SHALL BE MULTIPLIED BY 1.2 FOR EPOXY-COATED HOOKED REINFORCING BARS.

TYPICAL DEVELOPMENT LENGTHS OF STANDARD HOOKS IN TENSION (7)

NO SCALE

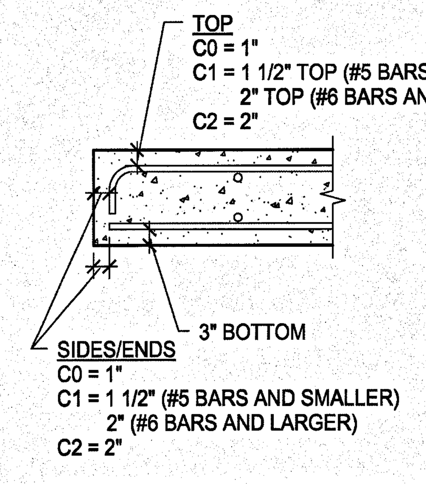

NOTES:
1. REFER TO "NOTES FOR TYPICAL CLEAR CONCRETE COVER FOR REINFORCING STEEL" FOR ADDITIONAL INFORMATION.

TYPICAL CLEAR CONCRETE COVER FOR REINFORCING STEEL IN SLABS-ON-GRADE (3)

NO SCALE

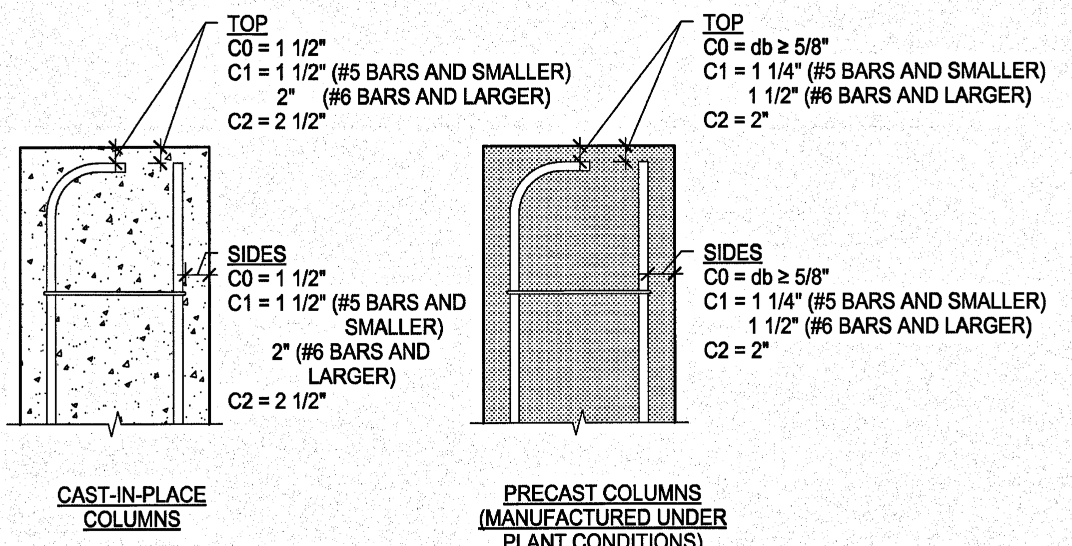

NOTES:
1. REFER TO "NOTES FOR TYPICAL CLEAR CONCRETE COVER FOR REINFORCING STEEL" FOR ADDITIONAL INFORMATION.
2. FOR PRECAST COLUMNS NOT MANUFACTURED UNDER PLANT CONDITIONS, COVERS NOTED FOR CAST-IN-PLACE COLUMNS SHALL BE USED.

TYPICAL CLEAR CONCRETE COVER FOR REINFORCING STEEL IN COLUMNS (4)

NO SCALE

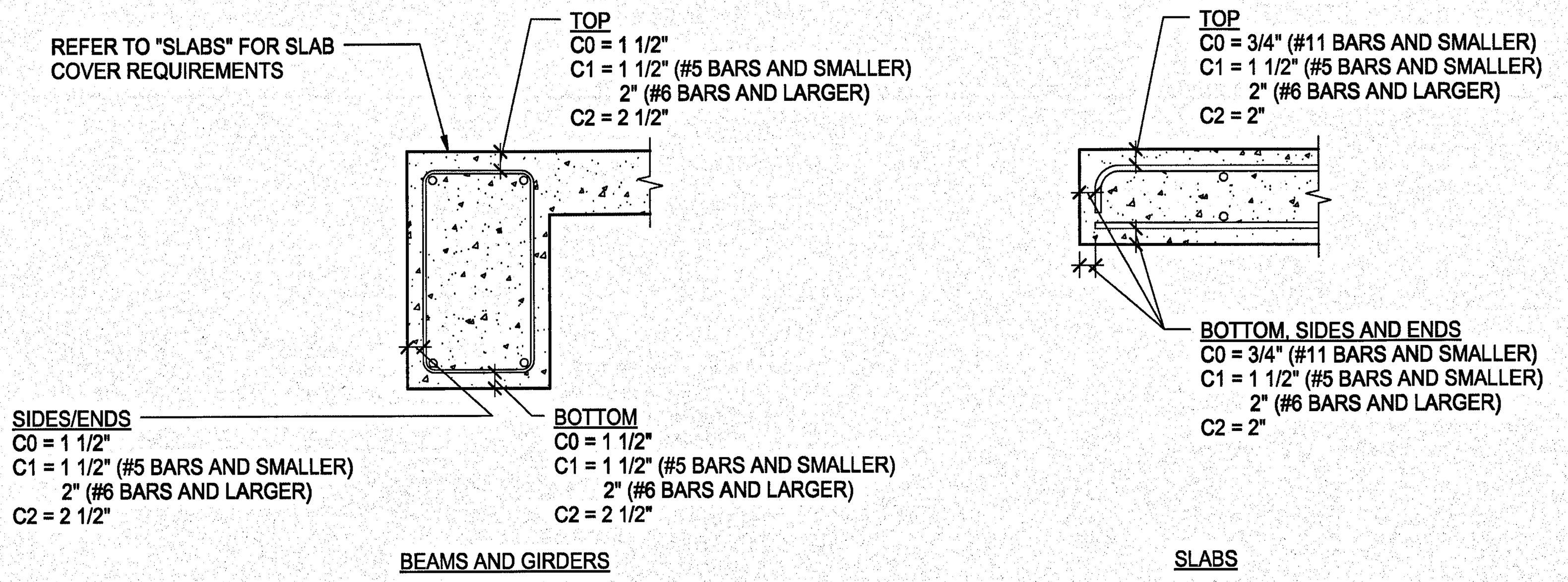

NOTES:
1. REFER TO "NOTES FOR TYPICAL CLEAR CONCRETE COVER FOR REINFORCING STEEL" FOR ADDITIONAL INFORMATION.

TYPICAL CLEAR CONCRETE COVER FOR REINFORCING STEEL IN CAST-IN-PLACE ELEVATED FRAMING (6)

NO SCALE

NOTES:
1. CONCRETE PROFILES AND REINFORCING STEEL CONFIGURATIONS ARE SCHEMATIC AND ARE PROVIDED FOR ESTABLISHING TYPICAL CLEAR CONCRETE COVERS ONLY. REFER TO STRUCTURAL PLANS AND DETAILS FOR ALL OTHER INFORMATION.
2. ALL COVERS SHOWN ARE CLEAR FROM THE OUTERMOST SURFACE OF REINFORCING STEEL TO THE CLOSEST OUTER SURFACE OF THE CONCRETE, INCLUDING REVEALS, DRIP GROOVES, OR RUSTICATIONS.
3. WHERE COVERS ARE DIFFERENT AS A FUNCTION OF BAR SIZE, DETAILER SHALL ADJUST LOCATION OF TRANSVERSE REINFORCING STEEL AS REQUIRED SUCH THAT CLEAR COVERS ARE MET FOR BOTH TRANSVERSE AND LONGITUDINAL STEEL.
4. C0, C1, AND C2 REFER TO THE CORROSION EXPOSURE CLASS OF THE CONCRETE ELEMENT. REFER TO THE CLASSES OF CONCRETE MATRIX AND GENERAL NOTES FOR ADDITIONAL INFORMATION.

NOTES FOR TYPICAL CLEAR CONCRETE COVER FOR REINFORCING STEEL (8)

NO SCALE

SYM	ZONE	REVISIONS	DATE	APPROVED

WALTER P MOORE
WALTER P. MOORE AND ASSOCIATES, INC.
300 SOUTH ORANGE AVENUE, SUITE 1150
ORLANDO, FLORIDA 32801.3332
PHONE: 407.418.2218 FAX: 407.418.2257
CERTIFICATE OF AUTHORIZATION NO. 3818
S07-11023-00
JAIME E. VASQUEZ P.E. NO. 49103
TO THE BEST OF THE ENGINEER'S KNOWLEDGE, THE PLANS AND SPECIFICATIONS COMPLY WITH THE APPLICABLE MINIMUM BUILDING CODES

SIGNATURES	DATE
DRAWN ANDREW MYERS	12.18.13
CHECKED JAIME E. VASQUEZ	12.18.13
SUBMITTED: ARCH/ENG OF RECORD JAIME E. VASQUEZ	12.18.13
ST of LICENSURE: FL LICENSE NO: 49103	
APPROVED JOSEPH M. ALES	12.18.13
BRUCE KINNAIRD	12/18/13

NATIONAL AERONAUTICS AND SPACE ADMINISTRATION
JOHN F. KENNEDY SPACE CENTER, NASA
KENNEDY SPACE CENTER, FLORIDA

KSC CENTRAL CAMPUS
REPLACEMENT HEADQUARTERS BUILDING
PHASE 1
VOL. 1 OF 4

CONCRETE TYPICAL DETAILS

S402

FILE NO. C-12070.00 | SIZE F | DWG. NO. 79K39622 VOL 1
PCN. NO. 98745.1a | SHEET 144

NOTICE: When Government drawings, specifications, or other data are used for any purpose other than in connection with a definitely related Government procurement operation, the United States Government thereby incurs no responsibility nor obligation whatsoever; and the fact that the Government may have formulated, furnished, or in any way supplied the said drawings, specifications or other data is not to be regarded by implication or otherwise as in any manner licensing the holder or any other person or corporation, or conveying any rights or permission to manufacture, use, or sell any patented invention that may in any way be related thereto.

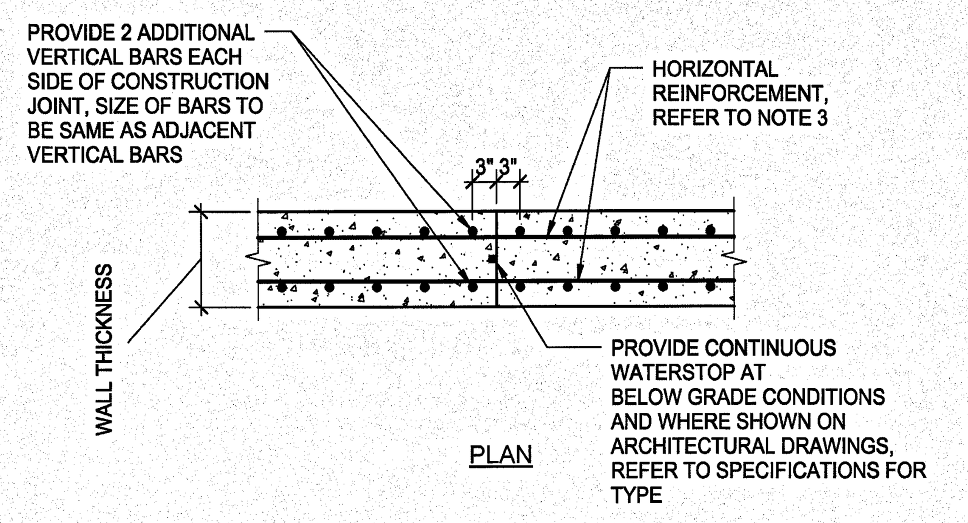

NOTES:
1. WHERE CONSTRUCTION JOINT LOCATIONS ARE NOT SHOWN ON THE DRAWINGS, SUBMIT PROPOSED WALL JOINT LOCATIONS FOR APPROVAL PRIOR TO DETAILING REINFORCEMENT AND A MINIMUM OF TWO WEEKS PRIOR TO POUR. JOINTS SHALL BE SPACED NO CLOSER THAN 5'-0" FROM CORNERS AND PILASTERS.
2. WHERE WALL SPANS HORIZONTALLY TO SUPPORT VERTICAL OR LATERAL LOADS, JOINTS SHALL BE LOCATED IN MIDDLE THIRD OF WALL SPANS, UNLESS NOTED OTHERWISE. REFER TO PLANS FOR LOCATIONS WHERE WALLS ARE SO DESIGNED.
3. SPLICES OF HORIZONTAL REINFORCEMENT ARE ALLOWED BUT NOT REQUIRED AT CONSTRUCTION JOINTS. REFER TO OTHER TYPICAL DETAILS FOR WALL REINFORCEMENT SPLICE LENGTHS.

© COPYRIGHT WALTER P. MOORE AND ASSOCIATES, INC. 2011

TYPICAL VERTICAL CONSTRUCTION JOINT AT CONCRETE WALL (VISUALLY NON-CRITICAL) (1)

NO SCALE

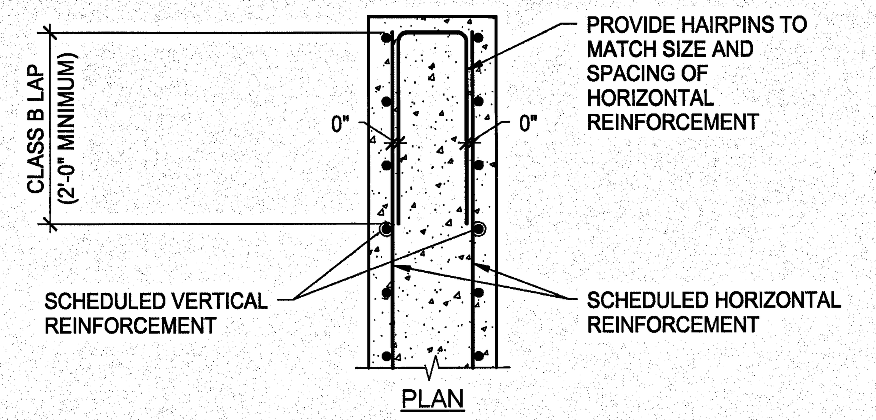

NOTES:
1. REFER TO OTHER DETAILS FOR REQUIRED WALL THICKNESS AND REINFORCEMENT.
2. THERE SHALL BE NO VERTICAL CONSTRUCTION JOINTS IN WALLS WITHIN 5'-0" OF ENDS, UNLESS SPECIFICALLY DETAILED ON THE DRAWINGS.

© COPYRIGHT WALTER P. MOORE AND ASSOCIATES, INC. 2010

TYPICAL REINFORCEMENT SPLICE AT CONCRETE WALL END (4)

NO SCALE

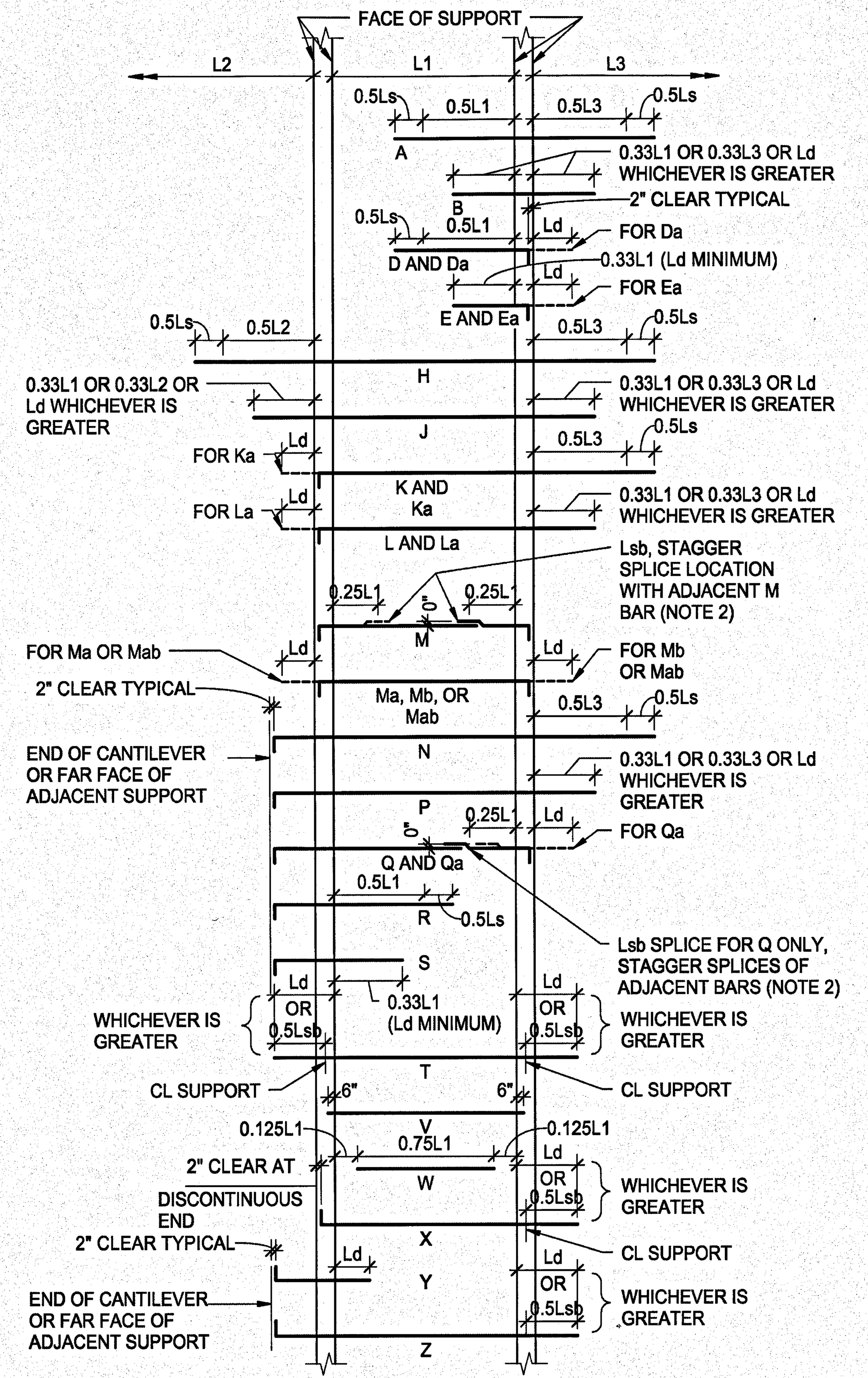

NOTES:
1. REFER TO TYPICAL BAR PLACEMENT NOTES.
2. BOTTOM BAR SPLICES IN SLAB OLUMN STRIPS NOT PERMITTED AT EXTERIOR OR CANTILEVERED UPPORTS.

© COPYRIGHT WALTER P. MOORE AND ASSOCIATES, INC. 2009

TYPICAL BAR PLACEMENT DIAGRAM CONCRETE BEAM AND/OR ONE WAY SLAB (7)

NO SCALE

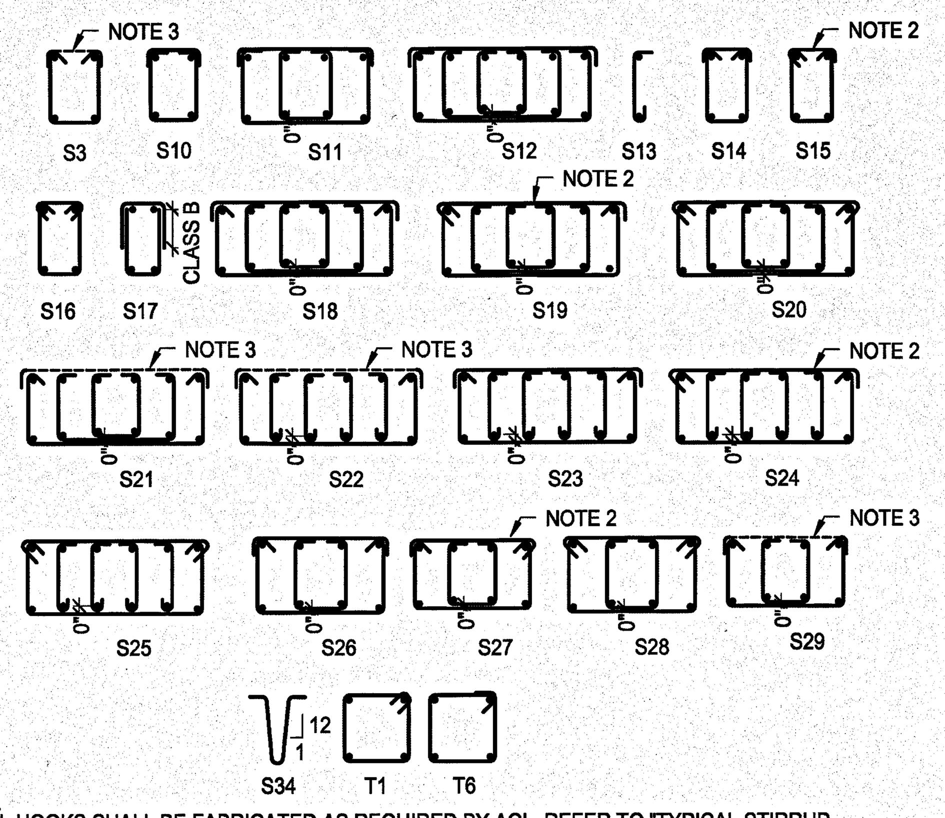

NOTES:
1. ALL HOOKS SHALL BE FABRICATED AS REQUIRED BY ACI. REFER TO "TYPICAL STIRRUP AND TIE HOOK TYPES."
2. THE TOP CAP FOR CLOSED STIRRUPS S15, S19, S24, AND S27 SHALL BE PLACED SUCH THAT THE 135° HOOK END IS NOT ON THE SIDE CONFINED BY THE SLAB.
3. PROVIDE TOP CAP FOR OPEN STIRRUPS S3, S21, S22, AND S29 TO MATCH SCHEDULED STIRRUP SIZE AT 48".

© COPYRIGHT WALTER P. MOORE AND ASSOCIATES, INC. 2010

TYPICAL STIRRUP TYPES (9)

NO SCALE

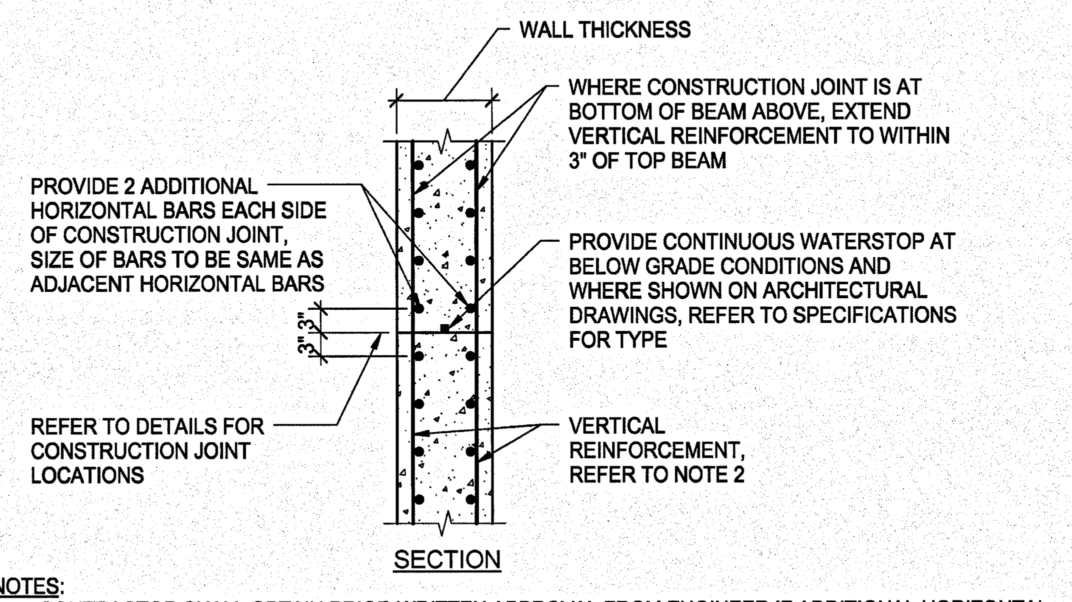

NOTES:
1. CONTRACTOR SHALL OBTAIN PRIOR WRITTEN APPROVAL FROM ENGINEER IF ADDITIONAL HORIZONTAL CONSTRUCTION JOINTS NOT SHOWN ON THE DRAWINGS ARE DESIRED.
2. SPLICES OF VERTICAL REINFORCEMENT ARE ALLOWED BUT NOT REQUIRED AT CONSTRUCTION JOINTS. WHERE SPLICE IS DESIRED AT CONSTRUCTION JOINT, PROVIDE CLASS B LAP SPLICES WITH NO MORE THAN 50% OF THE BARS IN ANY FACE SPLICED AT THE JOINT. SPLICED BARS SHALL BE STAGGERED WITH UNSPLICED BARS. REFER TO OTHER TYPICAL DETAILS FOR WALL REINFORCEMENT SPLICE LENGTHS.

© COPYRIGHT WALTER P. MOORE AND ASSOCIATES, INC. 2011

TYPICAL HORIZONTAL CONSTRUCTION JOINT AT CONCRETE WALL (2)

NO SCALE

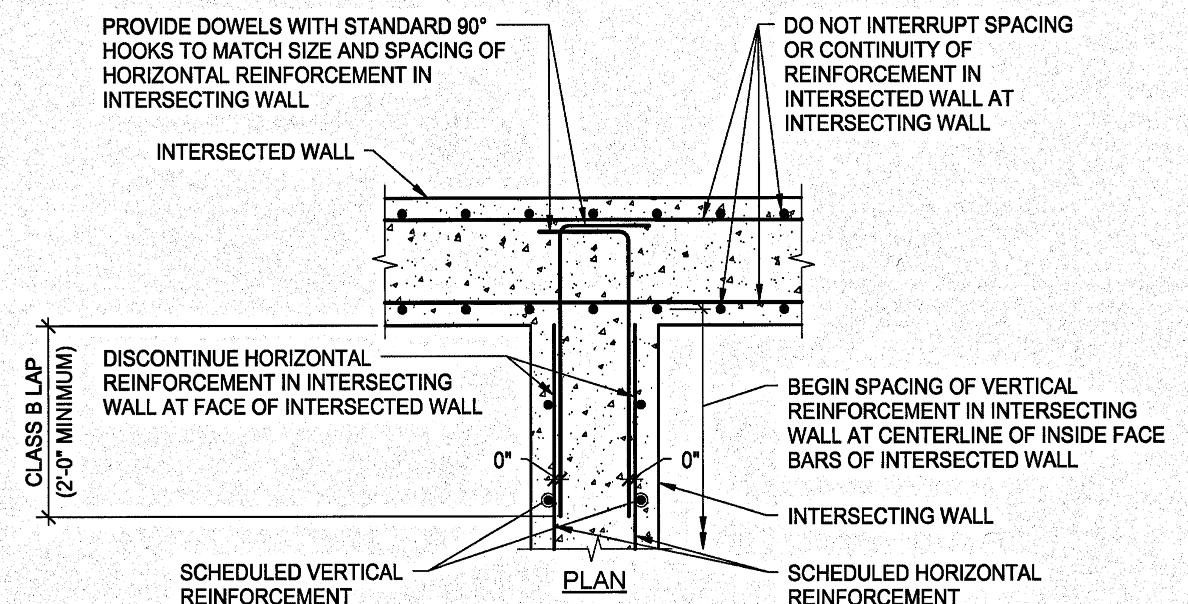

NOTES:
1. REFER TO OTHER DETAILS FOR REQUIRED WALL THICKNESSES AND REINFORCEMENT.
2. THERE SHALL BE NO VERTICAL CONSTRUCTION JOINTS IN WALLS WITHIN 5'-0" OF INTERSECTIONS, UNLESS SPECIFICALLY DETAILED ON THE DRAWINGS.

© COPYRIGHT WALTER P. MOORE AND ASSOCIATES, INC. 2010

TYPICAL REINFORCEMENT SPLICE AT CONCRETE WALL INTERSECTION (5)

NO SCALE

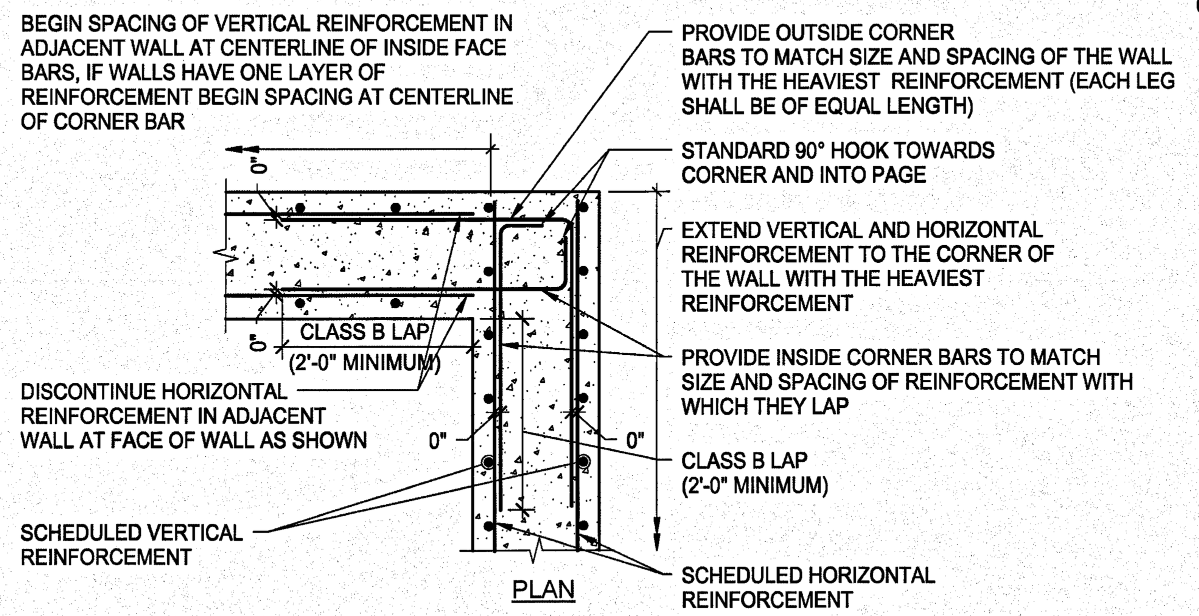

NOTES:
1. REFER TO OTHER DETAILS FOR REQUIRED WALL THICKNESS AND REINFORCEMENT.
2. THERE SHALL BE NO VERTICAL CONSTRUCTION JOINTS IN WALLS WITHIN 5'-0" OF CORNERS, UNLESS SPECIFICALLY DETAILED ON THE DRAWINGS.

© COPYRIGHT WALTER P. MOORE AND ASSOCIATES, INC. 2010

TYPICAL REINFORCEMENT SPLICE AT CONCRETE WALL CORNER (3)

NO SCALE

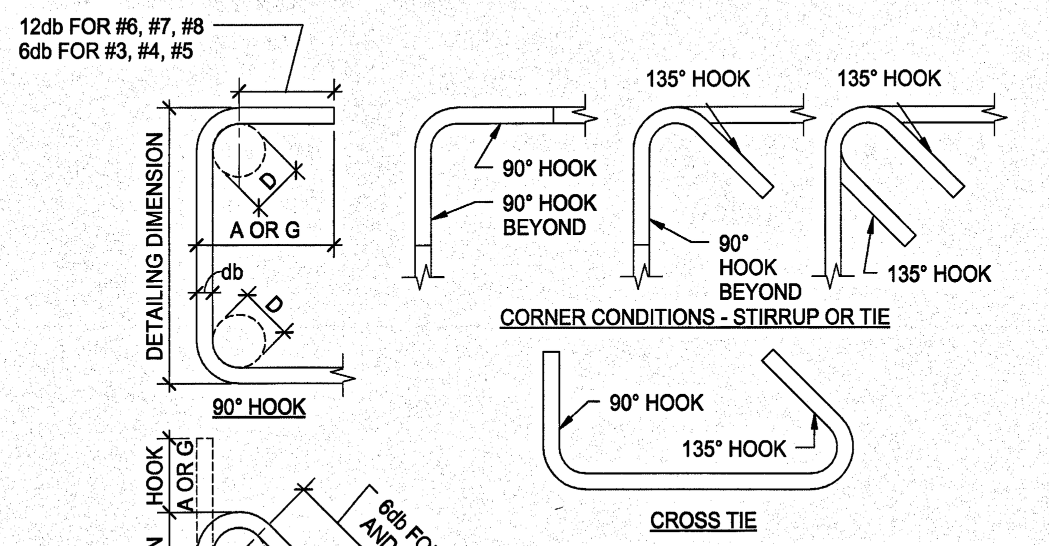

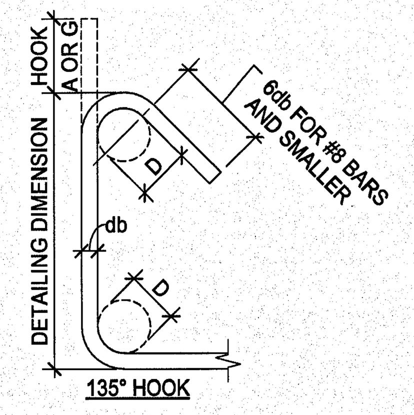

STIRRUP AND TIE HOOKS			
BAR SIZE	D (INCHES)	90° HOOK A OR G (INCHES)	135° HOOK A OR G (INCHES)
#3	1 1/2	4	4
#4	2	4 1/2	4 1/2
#5	2 1/2	6	5 1/2

D = INSIDE DIAMETER OF BEND

© COPYRIGHT WALTER P. MOORE AND ASSOCIATES, INC. 2010

TYPICAL STIRRUP AND TIE HOOK TYPES (6)

NO SCALE

NOTES:
1. SCHEDULED LEFT (L) AND RIGHT (R) ENDS OF MEMBERS ARE RELATIVE TO THE ORIENTATION OF THE MEMBER MARK, AS SHOWN BELOW:

2. (ni) NOTED IN BEAM SCHEDULE AFTER BAR TYPE INDICATES MINIMUM NUMBER OF BARS ("n") WHICH ARE INTEGRITY BARS AND SHALL BE PLACED WITHIN THE VERTICAL COLUMN REINFORCING STEEL CAGE. REMAINDER OF BARS MAY BE PLACED WITHIN, OR OUTSIDE, THE COLUMN CAGE. FOR EXAMPLE, 4-#6A(2i) INDICATES A TOTAL OF (4) #6 "A" BARS, 2 OF WHICH ARE CLASSIFIED AS "INTEGRITY BARS" AND MUST BE PLACED WITHIN THE COLUMN CAGE. PROVIDE SUPPLEMENTAL BARS AS REQUIRED FOR STIRRUPS PER NOTE 10.
3. Ld EQUALS TENSION DEVELOPMENT LENGTH, UNLESS NOTED OTHERWISE IN SCHEDULE.
4. Lsb EQUALS BAR "CLASS B" TENSION LAP SPLICE LENGTH, UNLESS NOTED OTHERWISE IN SCHEDULE.
5. Ls EQUALS:
   a) BAR "CLASS B" TENSION LAP SPLICE LENGTH Lsb FOR BAR GROUPS SCHEDULED WITH INTEGRITY ("i") BARS. FOR EXAMPLE, 4-#6A(2i) INDICATES THE (4) #6 "A" BARS SHALL HAVE A "CLASS B" LAP SPLICE.
   b) BAR TENSION DEVELOPMENT LENGTH Ld FOR BAR GROUPS WITHOUT INTEGRITY BARS.FOR EXAMPLE, 4-#6A INDICATES THE (4) #6 "A" BARS SHALL HAVE SPLICE LENGTH EQUAL TO Ld.
   c) OTHER SPLICE LENGTH NOTED IN BEAM/GIRDER/SLAB SCHEDULE.
6. HOOKS SHOWN ARE GRAPHICAL REPRESENTATIONS AND MAY NOT REFLECT ACTUAL CONDITION. UNLESS NOTED OTHERWISE, TOP HOOKS SHALL HOOK DOWN AND BOTTOM HOOKS SHALL HOOK UP.
7. ALL HOOKS SHOWN ARE STANDARD HOOKS (90° OR 180°).
8. SPLICES IN SCHEDULED BARS LESS THAN 60'-0" LENGTH ARE NOT PERMITTED. SPLICES IN SCHEDULED BARS MORE THAN 60'-0" LENGTH SHALL BE REFERRED TO ENGINEER FOR APPROVAL.
9. UNLESS A SPECIFIC BAR TYPE IS SHOWN IN THE SCHEDULE, FACE BARS SHALL BE CONTINUOUS FOR THE FULL LENGTH OF THE MEMBER. EXTEND FACE BARS A DISTANCE Ld FROM CENTERLINE OF CONTINUOUS SUPPORTS AND PROVIDE 90° HOOKS AT DISCONTINUOUS ENDS. NUMBER OF BARS SHOWN ON SCHEDULE SHALL BE PROVIDED ON EACH FACE OF MEMBER.
10. EVERY SINGLE STIRRUP LEG MUST BE HOOKED AROUND A LONGITUDINAL REINFORCING BAR WHERE THE NUMBER OF SCHEDULED TOP OR BOTTOM LONGITUDINAL REINFORCING BARS IS LESS THAN THE NUMBER OF STIRRUP LEGS AT ANY POINT WITHIN THE BEAM SPAN, PROVIDE ADDITIONAL #4 LONGITUDINAL BARS AS REQUIRED SUCH THAT EVERY STIRRUP LEG IS HOOKED AROUND A LONGITUDINAL BAR. LAP ADDITIONAL #4 BARS 2'-0" WITH SCHEDULED REINFORCEMENT WHERE APPLICABLE.

00860-FL-BPLB-01N
© COPYRIGHT WALTER P. MOORE AND ASSOCIATES, INC. 2009

TYPICAL BAR PLACEMENT NOTES (8)

NO SCALE

SYM	ZONE		DATE	APPROVED

REVISIONS

WALTER P MOORE
WALTER P. MOORE AND ASSOCIATES, INC.
300 SOUTH ORANGE AVENUE, SUITE 1150
ORLANDO, FLORIDA 32801.3332
PHONE: 407.418.2218 FAX: 407.418.2257
CERTIFICATE OF AUTHORIZATION NO. 3818
S07-11023-00
JAIME E. VASQUEZ P.E. NO. 49103
TO THE BEST OF THE ENGINEER'S KNOWLEDGE, THE PLANS AND SPECIFICATIONS COMPLY WITH THE APPLICABLE MINIMUM BUILDING CODES

SIGNATURES	DATE
DRAWN ANDREW MYERS	12.18.13
CHECKED JAIME E. VASQUEZ	12.18.13
SUBMITTED: ARCH/ENG OF RECORD JAIME E. VASQUEZ	12.18.13
ST of LICENSURE: FL LICENSE NO: 49103	
APPROVED JOSEPH M. ALES	12.18.13
BRUCE KINNAIRD	12/18/13

NATIONAL AERONAUTICS AND SPACE ADMINISTRATION
JOHN F. KENNEDY SPACE CENTER, NASA
KENNEDY SPACE CENTER, FLORIDA

KSC CENTRAL CAMPUS
REPLACEMENT HEADQUARTERS BUILDING
PHASE 1
VOL. 1 OF 4

CONCRETE TYPICAL DETAILS

FILE NO.	SIZE	DWG. NO.
C-12070.00	F	79K39622 VOL 1

PCN. NO. 98745.1a — SHEET 145

S403

NOTICE: When Government drawings, specifications, or other data are used for any purpose other than in connection with a definitely related Government procurement operation, the United States Government thereby incurs no responsibility nor obligation whatsoever; and the fact that the Government may have formulated, furnished, or in any way supplied the said drawings, specifications or other data is not to be regarded by implication or otherwise as in any manner licensing the holder or any other person or corporation, or conveying any rights or permission to manufacture, use, or sell any patented invention that may in any way be related thereto.

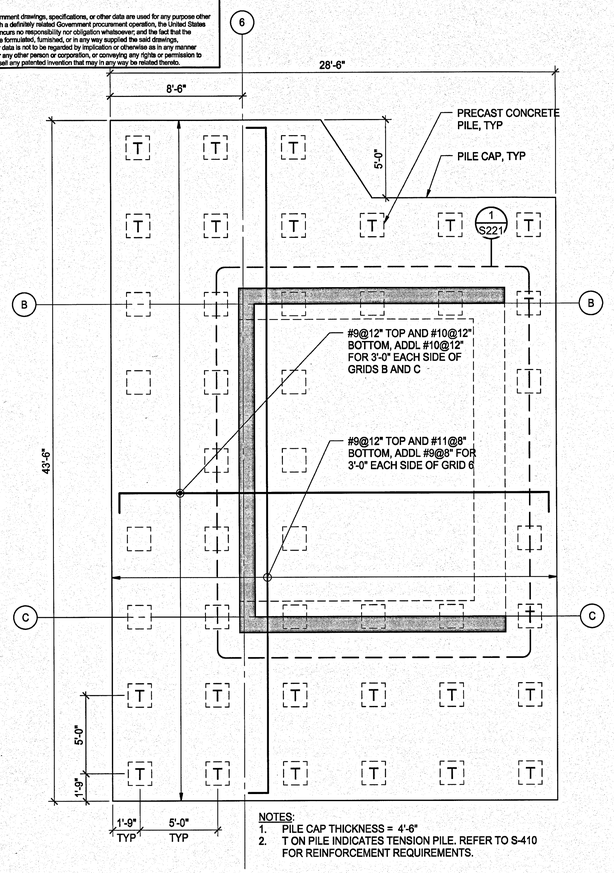

NOTES:
1. PILE CAP THICKNESS = 4'-6"
2. T ON PILE INDICATES TENSION PILE. REFER TO S-410 FOR REINFORCEMENT REQUIREMENTS.

SHEAR WALL PILE CAP PC(SW)-43 (1)
1/4" = 1'-0"

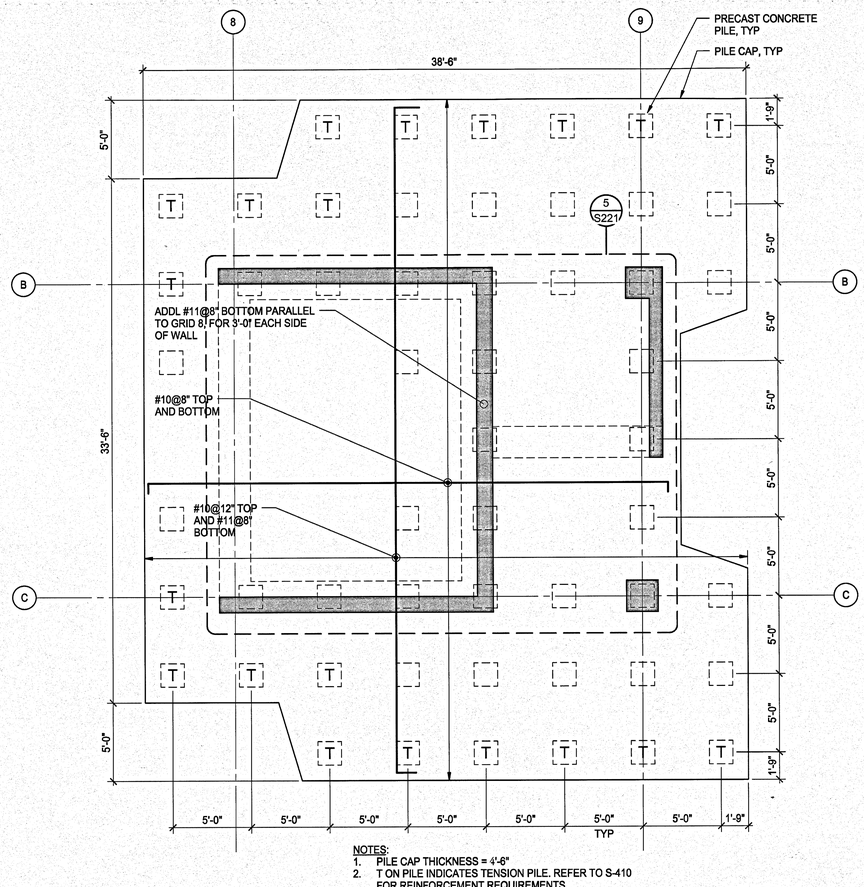

NOTES:
1. PILE CAP THICKNESS = 4'-6"
2. T ON PILE INDICATES TENSION PILE. REFER TO S-410 FOR REINFORCEMENT REQUIREMENTS.

SHEAR WALL PILE CAP PC(SW)-54 (3)
1/4" = 1'-0"

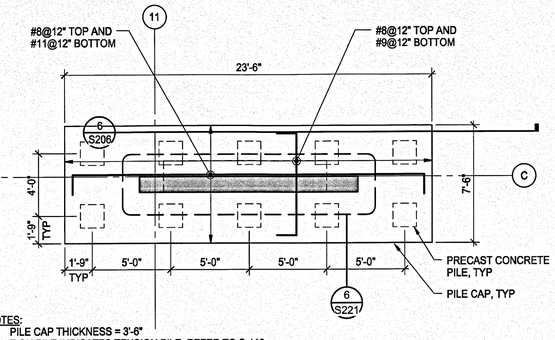

NOTES:
1. PILE CAP THICKNESS = 3'-6"
2. T ON PILE INDICATES TENSION PILE. REFER TO S-410 FOR REINFORCEMENT REQUIREMENTS

SHEAR WALL PILE CAP PC(SW)-10 (5)
1/4" = 1'-0"

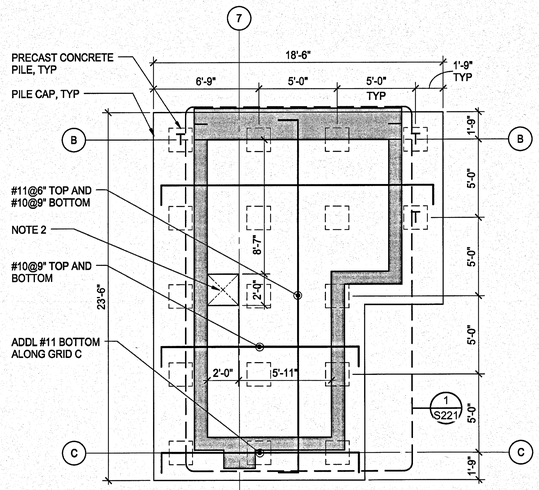

NOTES:
1. PILE CAP THICKNESS = 3'-6"
2. SUMP PIT 2'-0"x2'-0"x2'-0" DEEP
3. WHERE PILE CAP REINFORCEMENT IS INTERRUPTED BY SUMP PIT OR OTHER PENETRATIONS, PLACE 1/2 OF THE INTERUPPTED REINFORCEMENT ON EACH SIDE OF OPENING.
4. T ON PILE INDICATES TENSION PILE. REFER TO S-410 FOR REINFORCEMENT REQUIREMENTS.

SHEAR WALL PILE CAP PC(SW)-17 (2)
1/4" = 1'-0"

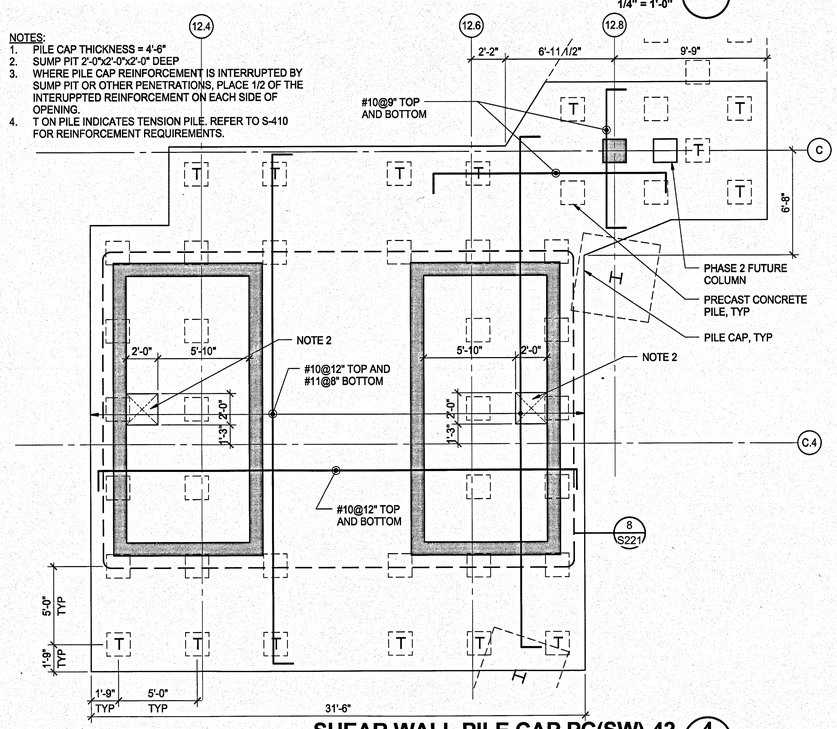

SHEAR WALL PILE CAP PC(SW)-42 (4)
1/4" = 1'-0"

SIGNATURES	DATE
DRAWN	
ANDREW MYERS	12.18.13
CHECKED	
JAIME E. VASQUEZ	12.18.13
SUBMITTED - ARCHIVING OF RECORD	
JAIME E. VASQUEZ	12.18.13
ST of LICENSURE: FL	
LICENSE NO: 49103	
APPROVED	
JOSEPH M. REES	12.18.13
BRUCE KINNAIRD	6/19/13

S409

SYM | ZONE | DATE APPROVED

REVISIONS

WALTER P MOORE
WALTER P. MOORE AND ASSOCIATES, INC.
300 SOUTH ORANGE AVENUE, SUITE 1100
ORLANDO, FLORIDA 32801.3382
PHONE: 407.418.2218 FAX: 407.418.2267
CERTIFICATE OF AUTHORIZATION NO. 3616
GCP-1105.00
JAIME E. VASQUEZ P.E. NO. 49103
TO THE BEST OF THE ENGINEER'S KNOWLEDGE, THE PLANS AND SPECIFICATIONS COMPLY WITH THE APPLICABLE MINIMUM BUILDING CODES

NATIONAL AERONAUTICS AND SPACE ADMINISTRATION
JOHN F. KENNEDY SPACE CENTER, NASA
KENNEDY SPACE CENTER, FLORIDA

KSC CENTRAL CAMPUS
REPLACEMENT HEADQUARTERS BUILDING
PHASE 1
VOL. 1 OF 4

SHEAR WALL PILE CAP DETAILS

FILE NO.	SIZE	DWG. NO.
C-12070.00	F	79K39622 VOL 1
PCN. NO. 98745.1a		SHEET 146

NOTICE: When Government drawings, specifications, or other data are used for any purpose other than in connection with a definitely related Government procurement operation, the United States Government thereby incurs no responsibility nor obligation whatsoever; and the fact that the Government may have formulated, furnished, or in any way supplied the said drawings, specifications or other data is not to be regarded by implication or otherwise as in any manner licensing the holder or any other person or corporation, or conveying any rights or permission to manufacture, use, or sell any patented invention that may in any way be related thereto.

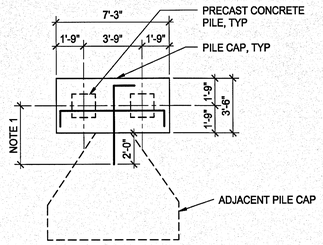

PC2

NOTE: EXTEND PC2 TO FACE OF ADJACENT PILE CAP AS REQD.

PILE CAP LAYOUT (PC-2) 1
NO SCALE

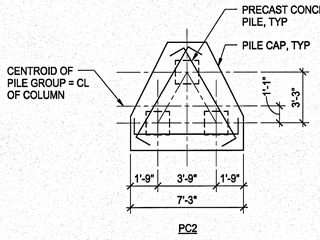

PC2

PILE CAP LAYOUT (PC-3) 2
NO SCALE

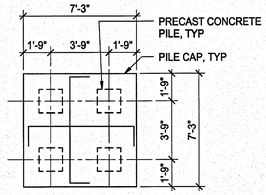

PC4

PILE CAP LAYOUT (PC-4) 3
NO SCALE

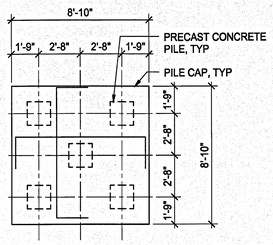

PC5

PILE CAP LAYOUT (PC-5) 4
NO SCALE

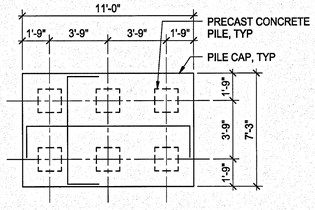

PC6

PILE CAP LAYOUT (PC-6) 5
NO SCALE

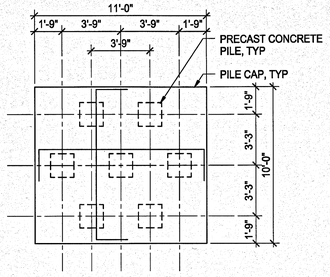

PC7

PILE CAP LAYOUT (PC-7) 7
NO SCALE

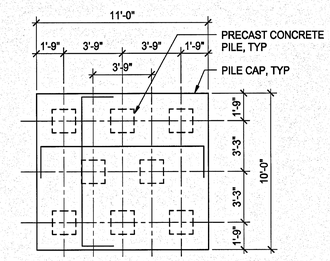

PC8

PILE CAP LAYOUT (PC-8) 8
NO SCALE

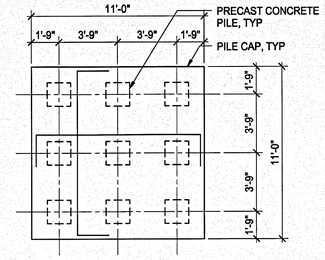

PC9

PILE CAP LAYOUT (PC-9) 10
NO SCALE

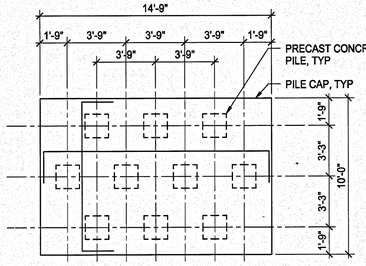

PC10

PILE CAP LAYOUT (PC-10) 11
NO SCALE

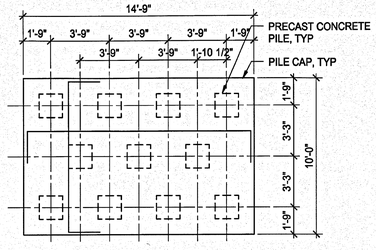

PC11

PILE CAP LAYOUT (PC-11) 13
NO SCALE

PILE CAP SCEDULE								
MARK	LONG DIM	SHORT DIM	DEPTH	REINF BOTT LONG	REINF TOP LONG	REINF BOTT SHORT	REINF TOP SHORT	REMARKS
PC2	7'-3"	3'-6"	3'-6"	5-#9H	-	6-#4H	-	NOTE 8
PC3	REF DETAIL	REF DETAIL	3'-0"	4-#10H 3-WAYS	-	-	-	
PC4	7'-3"	7'-3"	3'-0"	8-#9H	-	8-#9H	-	
PC5	8'-10"	8'-10"	3'-6"	11-#9H	-	11-#9H	-	
PC6	11'-0"	7'-3"	4'-3"	12-#9H	-	12-#9H	-	
PC7	11'-0"	10'-0"	4'-0"	11-#10H	-	13-#9H	-	
PC8	11'-0"	10'-0"	4'-0"	12-#10H	-	13-#10H	-	
PC9	11'-0"	11'-0"	4'-8"	14-#10H	-	14-#10H	-	
PC10	14'-9"	10'-0"	4'-8"	13-#11	-	15-#10H	-	
PC11	14'-9"	10'-0"	5'-0"	15-#11	-	18-#10H	-	

NOTES:
1. REINFOREMENT SHALL BE EVENLY SPACED UNLESS NOTED OTHERWISE.
2. "H" DENOTES HOOK BOTH ENDS OF REINFORCING BARS.
3. REINFORCING BAR BOTTOM COVER = 7"
4. PILE SPACING SHALL BE AS NOTED ON THE PILE CAP DETAILS.
5. PILE EMBEDMENT SHALL BE 4".
6. PILE EDGE DISTANCE SHALL BE 1'-9" UNLESS NOTED OTHERWISE.
7. DESIGN PILE LENGTH IS MEASURED FROM BOTTOM OF PILE CAP.
8. EXTEND SHORT DIRECTION REINF INTO ADJACENT PILE CAP AS SHOWN IN PC2, UNLESS OTHERWISE NOTED.

PILE CAP SCHEDULE 14
NO SCALE

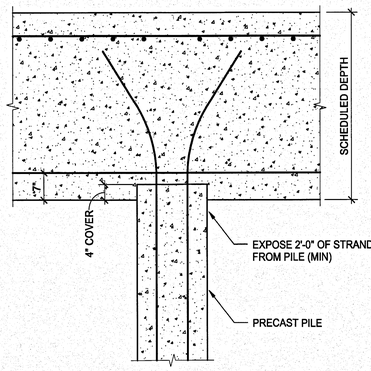

TENSION PILE CONNECTION TO PILECAP - ALTERNATE 6
3/4" = 1'-0"

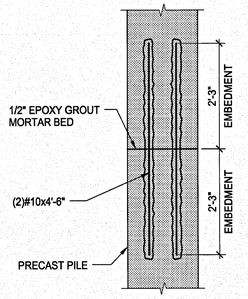

TYPICAL DETAIL CONCRETE PILE SPLICE 9
3/4" = 1'-0"

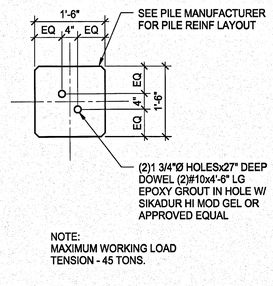

NOTE:
MAXIMUM WORKING LOAD TENSION - 45 TONS.

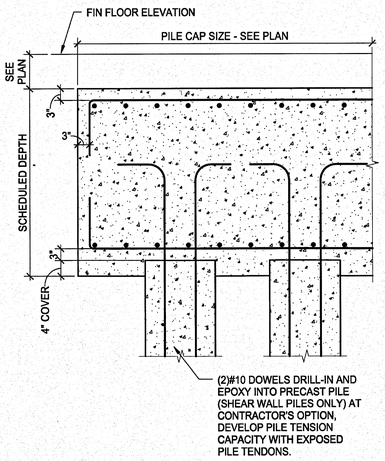

PILE CAP DETAIL 12
3/4" = 1'-0"

PC4

PILE CAP LAYOUT (PC-4) 3
NO SCALE

SYM	ZONE	REVISIONS	DATE APPROVED

WALTER P MOORE
WALTER P. MOORE AND ASSOCIATES, INC.
800 SOUTH ORANGE AVENUE, SUITE 1100
ORLANDO, FLORIDA 32801.3332
PHONE: 407.418.2218 FAX: 407.418.2257
CERTIFICATE OF AUTHORIZATION NO. 3019
007-110D3-00
JAIME E. VASQUEZ P.E. NO. 49103
TO THE BEST OF THE ENGINEER'S KNOWLEDGE, THE PLANS AND SPECIFICATIONS COMPLY WITH THE APPLICABLE MINIMUM BUILDING CODES

SIGNATURES	DATE
DRAWN ANDREW MYERS	12.18.13
CHECKED JAIME E. VASQUEZ	12.18.13
SUBMITTED - ARCHIENG OF RECORD JAIME E. VASQUEZ	12.18.13
ST of LICENSURE: FL	
LICENSE NO: 49103	
APPROVED JOSEPH M. REES	12/18/13
BRUCE KINNAIRD	12/18/13

NATIONAL AERONAUTICS AND SPACE ADMINISTRATION
JOHN F. KENNEDY SPACE CENTER, NASA
KENNEDY SPACE CENTER, FLORIDA

KSC CENTRAL CAMPUS
REPLACEMENT HEADQUARTERS BUILDING
PHASE 1
VOL. 1 OF 4

PILE CAP DETAILS

FILE NO.	SIZE	DWG. NO.
C-12070.00	F	79K39622 VOL 1
PCN. NO. 98745.1a		SHEET 147

S410

NOTICE: When Government drawings, specifications, or other data are used for any purpose other than in connection with a definitely related Government procurement operation, the United States Government thereby incurs no responsibility nor obligation whatsoever; and the fact that the Government may have formulated, furnished, or in any way supplied the said drawings, specifications or other data is not to be regarded by implication or otherwise as in any manner licensing the holder or any other person or corporation, or conveying any rights or permission to manufacture, use, or sell any patented invention that may in any way be related thereto.

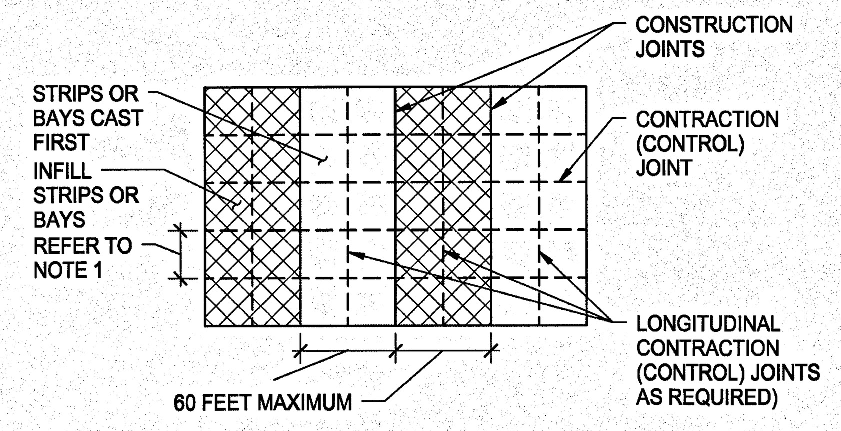

NOTES:
1. REFER TO "TYPICAL CONSTRUCTION AND CONTROL JOINTS - SLAB-ON-GRADE" FOR ADDITIONAL INFORMATION, INCLUDING JOINT SPACING REQUIREMENTS.

03251-FN-SOG-10
© COPYRIGHT WALTER P. MOORE AND ASSOCIATES, INC. 2010

TYPICAL LONG STRIP CONSTRUCTION SCHEMATIC JOINT LAYOUT (1)
NO SCALE

DIAMOND-SHAPED LOAD PLATE SCHEDULE		
SLAB DEPTH (INCHES)	PLATE SIZE (INCHES)	PLATE SPACING (INCHES)
5 TO 6	1/4x4 1/2x4 1/2	18
6 1/2 TO 8	3/8x4 1/2x4 1/2	18

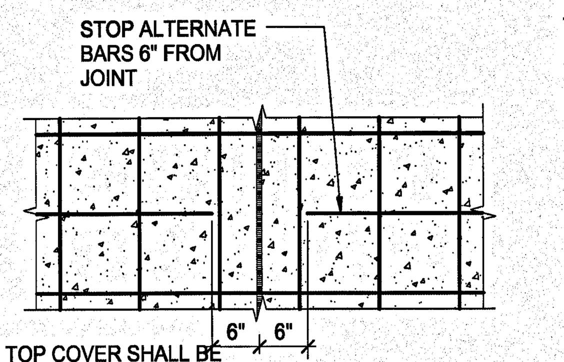

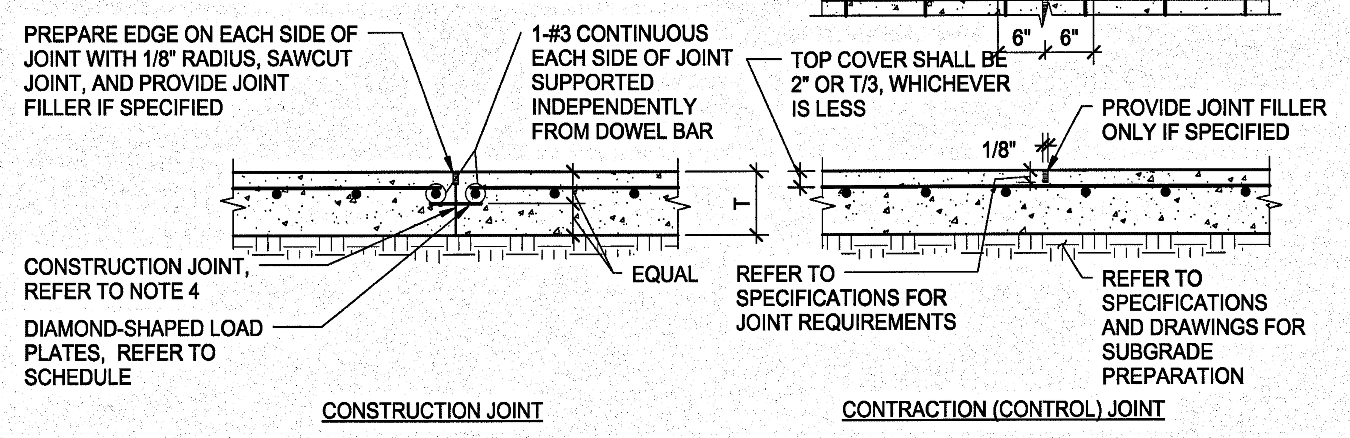

NOTES:
1. REFER TO PLAN FOR SLAB THICKNESS (T) AND REINFORCEMENT.
2. SLAB REINFORCEMENT SHALL BE CHAIRED BY SOIL SUPPORTED SLAB BOLSTERS.
3. LONG STRIP CONSTRUCTION METHOD SHALL BE USED IN PLACING CONCRETE FOR ALL SLABS-ON-GRADE UNLESS NOTED OTHERWISE. REFER TO "TYPICAL LONG STRIP CONSTRUCTION SCHEMATIC JOINT LAYOUT" FOR COMPLETE PLACING SEQUENCE. AT CONTRACTOR'S OPTION, LARGER SLAB AREAS MAY BE POURED PROVIDED THE EARLY-ENTRY DRY-CUT METHOD OF INSTALLING CONTRACTION JOINTS IS USED. REFER TO THE SPECIFICATIONS.
4. AT CONSTRUCTION JOINTS, BREAK BOND BETWEEN NEW AND PREVIOUSLY PLACED SLAB BY SPRAYING OR PAINTING EXPOSED SIDES OF JOINT WITH A CURING COMPOUND, BONDBREAKER, OR FORM OIL.
5. AT CONTRACTION (CONTROL) JOINTS, MAKE SAW CUT AS SOON AS SLAB IS ABLE TO SUPPORT WEIGHT OF WORKERS AND SAWING EQUIPMENT WITHOUT DAMAGE TO FINISH SURFACE OF SLAB. REFER TO SPECIFICATIONS.
6. PROVIDE CONTRACTION OR CONSTRUCTION JOINTS AT EVERY COLUMN LINE AND IN BETWEEN THE COLUMN LINES SUCH THAT THE JOINT SPACING DOES NOT EXCEED 36 TIMES THE SLAB THICKNESS NOR 20 FEET, WHICHEVER IS LESS.

03251-FN-SOG-01A
© COPYRIGHT WALTER P. MOORE AND ASSOCIATES, INC. 2010

TYPICAL CONSTRUCTION AND CONTROL JOINTS - SLAB-ON-GRADE - LIGHT TRAFFIC (ALTERNATE) (4)
NO SCALE

WALL FOOTING SCHEDULE				
MARK	WIDTH	DEPTH	TOP REINF	BOTTOM REINF
WF2.0	2'-0"	1'-0"		(4)-#5 (LONG) #4@12" (SHORT)
WF3.5	3'-6"	1'-6"	(5)-#7 (LONG) #5@9" (SHORT)	(5)-#7 (LONG) #5@9" (SHORT)
WF5.5	5'-6"	1'-3"		#6@12" (LONG) #6@10" (SHORT)
WF66"	5'-6"	1'-6"		#6@12" (EA WAY)

WALL FOOTING SCHEDULE (9)
NO SCALE

SPREAD FOOTING SCHEDULE					
MARK	LENGTH	WIDTH	DEPTH	TOP REINF (EACH WAY)	BOTTOM REINF (EACH WAY)
F5.0	5'-0"	5'-0"	1'-2"	(7)-#4	(7)-#4
F5.5	5'-6"	5'-6"	1'-2"		(6)-#5
F7.0	7'-0"	7'-0"	1'-6"		(6)-#6

SPREAD FOOTING SCHEDULE (10)
NO SCALE

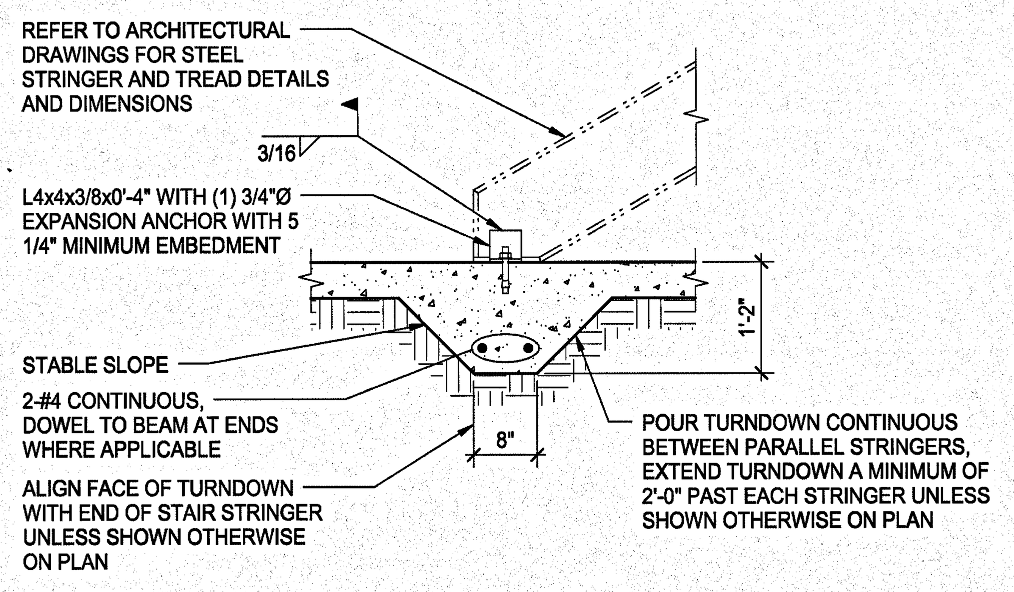

NOTES:
1. CONTRACTOR SHALL COORDINATE STAIR STRINGER LOCATIONS WITH ARCHITECTURAL DRAWINGS AND PROVIDE TURNDOWNS WHERE REQUIRED WHETHER SHOWN ON STRUCTURAL DRAWINGS OR NOT.
2. ATTACHMENT ANGLE SHALL BE HIDDEN BENEATH FIRST TREAD WHERE OPEN RISERS ARE USED. COORDINATE LOCATION WITH THE ARCHITECT.

03300-FN-SOG-01
© COPYRIGHT WALTER P. MOORE AND ASSOCIATES, INC. 2010

TYPICAL SLAB-ON-GRADE TURNDOWN AT STEEL STAIR (2)
NO SCALE

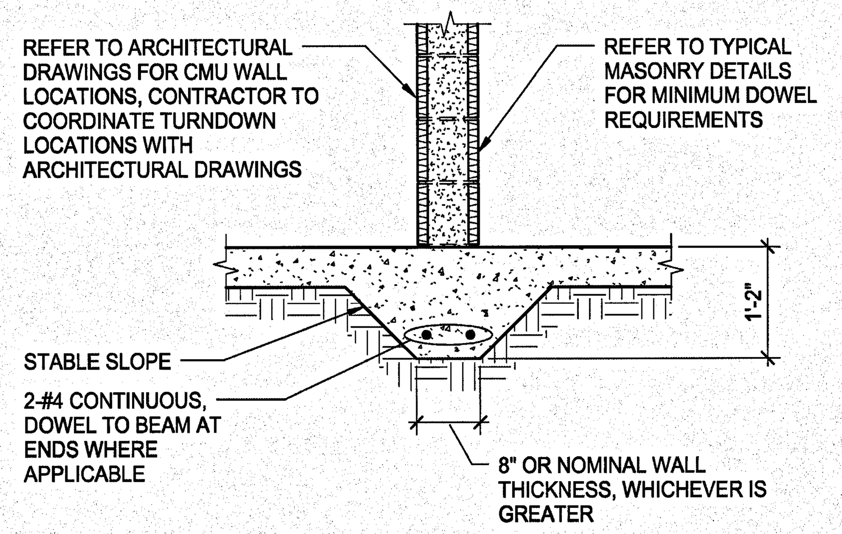

03300-FN-SOG-06
© COPYRIGHT WALTER P. MOORE AND ASSOCIATES, INC. 2010

TYPICAL INTERIOR SLAB-ON-GRADE TURNDOWN (5)
NO SCALE

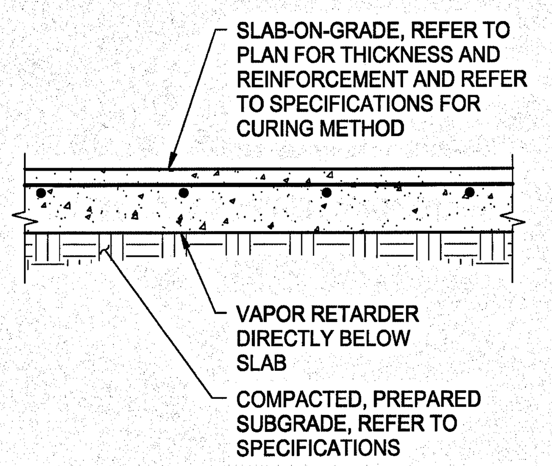

03300-FN-SUBPR-01B
© COPYRIGHT WALTER P. MOORE AND ASSOCIATES, INC. 2010

TYPICAL SLAB-ON-GRADE SUBGRADE PREPARATION (6)
NO SCALE

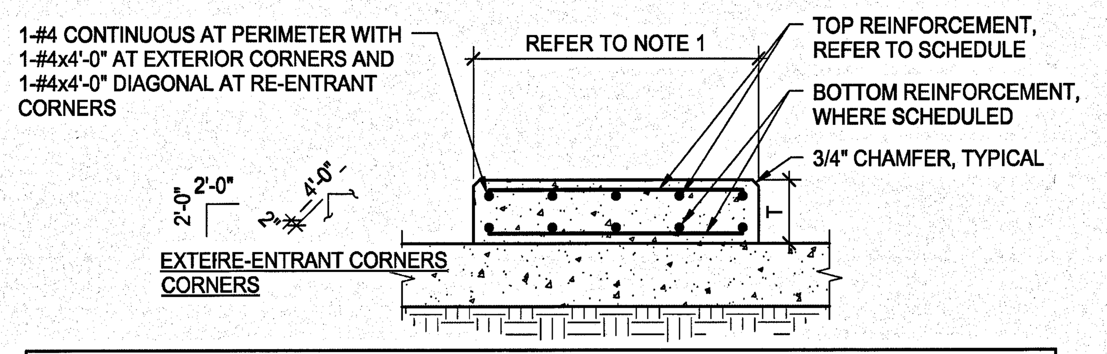

HOUSEKEEPING PAD REINFORCEMENT SCHEDULE		
PAD THICKNESS	TOP REINFORCEMENT	BOTTOM REINFORCEMENT
T = 4"	WWR 4x4-W2.9xW2.9 OR #3@12" EACH WAY	NONE
4" < T <= 6"	WWR 4x4-W4xW4 OR #4@18" EACH WAY	NONE
6" < T <= 8"	WWR 4x4-W6xW6 OR #4@12" EACH WAY	NONE
8" < T <= 12"	#4@18" EACH WAY	#4@18" EACH WAY
12" < T <= 16"	#4@12" EACH WAY	#4@12" EACH WAY

NOTES:
1. REFER TO ARCHITECTURAL, STRUCTURAL, OR MEP DRAWINGS FOR HOUSEKEEPING PAD PLAN DIMENSIONS AND THICKNESS (4" MINIMUM THICKNESS).
2. CONTRACTOR SHALL COORDINATE DIMENSIONS AND OTHER SPECIAL REQUIREMENTS WITH EQUIPMENT MANUFACTURERS AND PROVIDE WHERE REQUIRED WHETHER SHOWN ON STRUCTURAL DRAWINGS OR NOT.

03300-FN-SOG-10
© COPYRIGHT WALTER P. MOORE AND ASSOCIATES, INC. 2010

TYPICAL HOUSEKEEPING PAD OVER SLAB-ON-GRADE (3)
NO SCALE

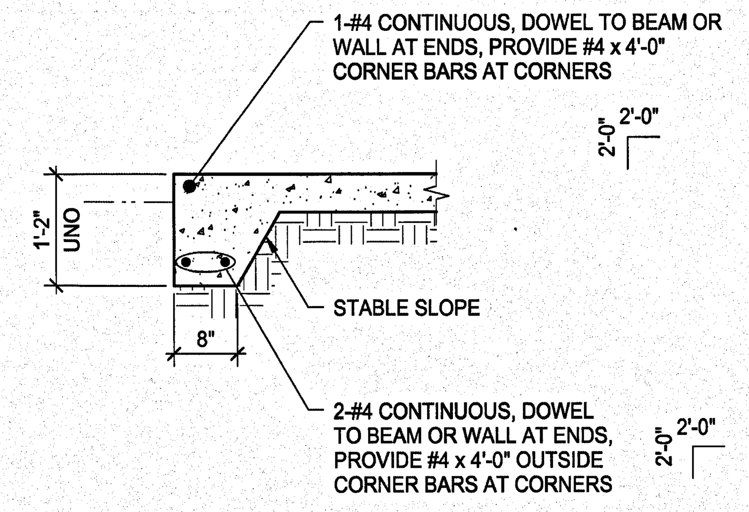

03300-FN-SOG-03
© COPYRIGHT WALTER P. MOORE AND ASSOCIATES, INC. 2010

TYPICAL EXTERIOR SLAB-ON-GRADE TURNDOWN (7)
NO SCALE

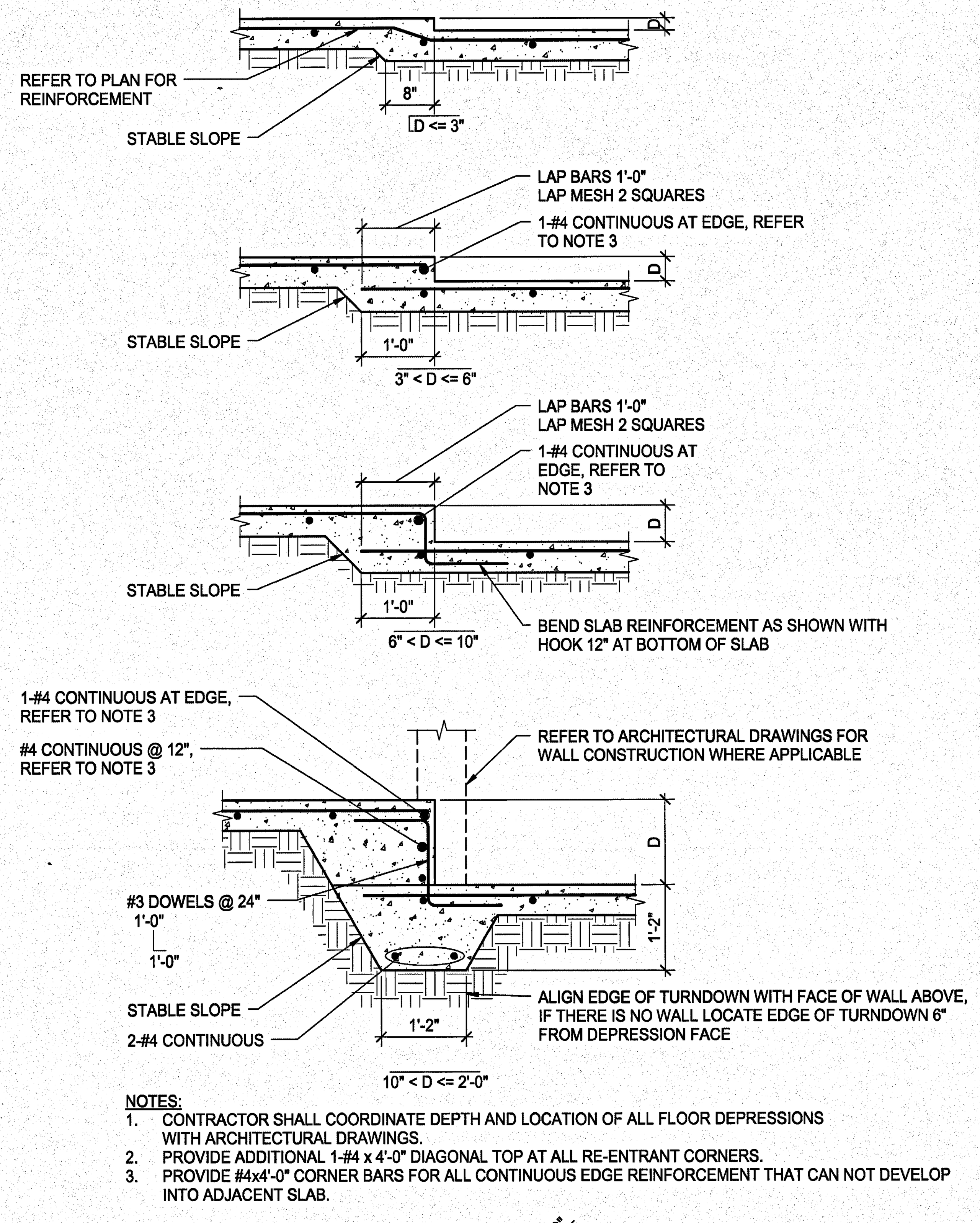

NOTES:
1. CONTRACTOR SHALL COORDINATE DEPTH AND LOCATION OF ALL FLOOR DEPRESSIONS WITH ARCHITECTURAL DRAWINGS.
2. PROVIDE ADDITIONAL 1-#4 x 4'-0" DIAGONAL TOP AT ALL RE-ENTRANT CORNERS.
3. PROVIDE #4x4'-0" CORNER BARS FOR ALL CONTINUOUS EDGE REINFORCEMENT THAT CAN NOT DEVELOP INTO ADJACENT SLAB.

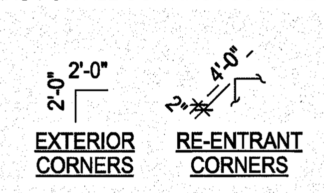

03300-FN-SOG-05
© COPYRIGHT WALTER P. MOORE AND ASSOCIATES, INC. 2010

TYPICAL SLAB-ON-GRADE DEPRESSIONS (8)
NO SCALE

SYM	ZONE	REVISIONS	DATE	APPROVED

WALTER P MOORE
WALTER P. MOORE AND ASSOCIATES, INC.
300 SOUTH ORANGE AVENUE, SUITE 1150
ORLANDO, FLORIDA 32801.3332
PHONE: 407.418.2218 FAX: 407.418.2257
CERTIFICATE OF AUTHORIZATION NO. 3818
S07-11023-00
JAIME E. VASQUEZ P.E. NO. 49103
TO THE BEST OF THE ENGINEER'S KNOWLEDGE, THE PLANS AND SPECIFICATIONS COMPLY WITH THE APPLICABLE MINIMUM BUILDING CODES

SIGNATURES	DATE
DRAWN ANDREW MYERS	12.18.13
CHECKED JAIME E. VASQUEZ	12.18.13
SUBMITTED: ARCH/ENG OF RECORD JAIME E. VASQUEZ	12.18.13
ST of LICENSURE: FL LICENSE NO: 49103	
APPROVED JOSEPH M. ALES	12.18.13
BRUCE KINNAIRD	12/18/13

NATIONAL AERONAUTICS AND SPACE ADMINISTRATION
JOHN F. KENNEDY SPACE CENTER, NASA
KENNEDY SPACE CENTER, FLORIDA

KSC CENTRAL CAMPUS
REPLACEMENT HEADQUARTERS BUILDING
PHASE 1
VOL. 1 OF 4

FOUNDATION TYPICAL DETAILS

S411

FILE NO.	SIZE	DWG. NO.
C-12070.00	F	79K39622 VOL 1

PCN. NO. 98745.1a
SHEET 148

NOTICE: When Government drawings, specifications, or other data are used for any purpose other than in connection with a definitely related Government procurement operation, the United States Government thereby incurs no responsibility nor obligation whatsoever; and the fact that the Government may have formulated, furnished, or in any way supplied the said drawings, specifications or other data is not to be regarded by implication or otherwise as in any manner licensing the holder or any other person or corporation, or conveying any rights or permission to manufacture, use, or sell any patented invention that may in any way be related thereto.

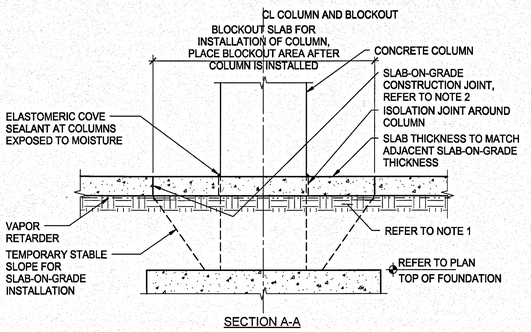

SECTION A-A

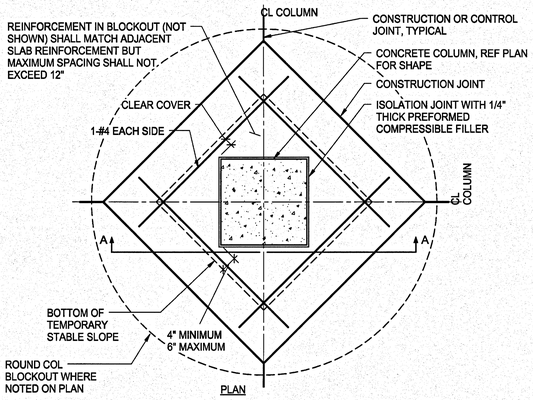

PLAN

NOTES:
1. REFER TO "TYPICAL SLAB-ON-GRADE SUBGRADE PREPARATION" FOR SUBGRADE PREPARATION REQUIREMENTS.
2. REFER TO "TYPICAL CONSTRUCTION AND CONTROL JOINTS - SLAB-ON-GRADE" FOR CONSTRUCTION AND CONTROL JOINT REQUIREMENTS.

03300-PA-BOD-16
© COPYRIGHT WALTER P. MOORE AND ASSOCIATES, INC. 2013

TYPICAL SLAB-ON-GRADE BLOCKOUT AROUND CONCRETE COLUMNS (1)
NO SCALE

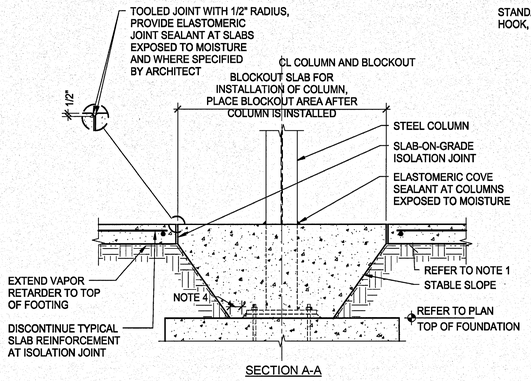

SECTION A-A

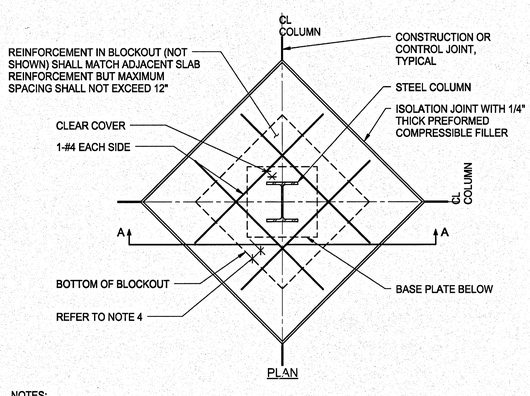

PLAN

NOTES:
1. REFER TO "TYPICAL SLAB-ON-GRADE SUBGRADE PREPARATION" FOR SUBGRADE PREPARATION REQUIREMENTS INCLUDING LOCATION OF VAPOR RETARDER RELATIVE TO SLAB AND GRANULAR BASE AND WHETHER FINE-GRADE GRANULAR MATERIAL IS REQUIRED.
2. REFER TO "TYPICAL CONSTRUCTION AND CONTROL JOINTS - SLAB-ON-GRADE" FOR CONSTRUCTION AND CONTROL JOINT REQUIREMENTS.
3. CONTRACTOR TO COORDINATE REQUIRED SIZE OF BLOCKOUT FOR STRUCTURAL STEEL COLUMNS WITH STEEL ERECTOR. SUBMIT THE DESIRED BLOCKOUT SIZE TO ARCHITECT FOR APPROVAL.
4. BLOCKOUT SHALL BE SIZED TO PROVIDE 3" MINIMUM CONCRETE COVER ALL AROUND COLUMN AND BASE PLATE.

03300-PA-BOD-06
© COPYRIGHT WALTER P. MOORE AND ASSOCIATES, INC. 2013

TYPICAL SLAB-ON-GRADE BLOCKOUT AROUND STEEL COLUMNS (3)
NO SCALE

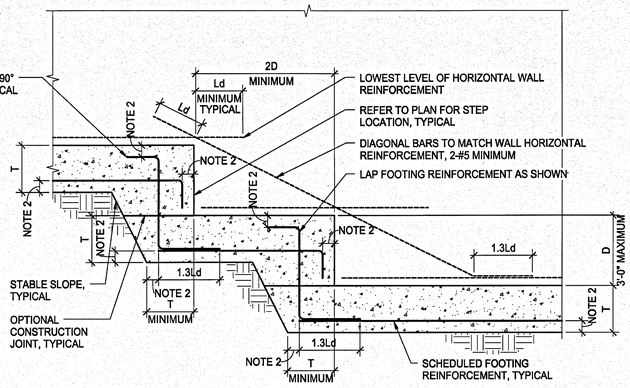

NOTES:
1. "T" IS THE THICKNESS OF THE CONTINUOUS WALL FOOTING. REFER TO PLAN OR DETAILS.
2. REFER TO OTHER DETAILS FOR CONCRETE CLEAR COVER REQUIREMENTS.

03300-PA-STRT-01
© COPYRIGHT WALTER P. MOORE AND ASSOCIATES, INC. 2011

TYPICAL STEPPED CONCRETE WALL FOOTING (5)
NO SCALE

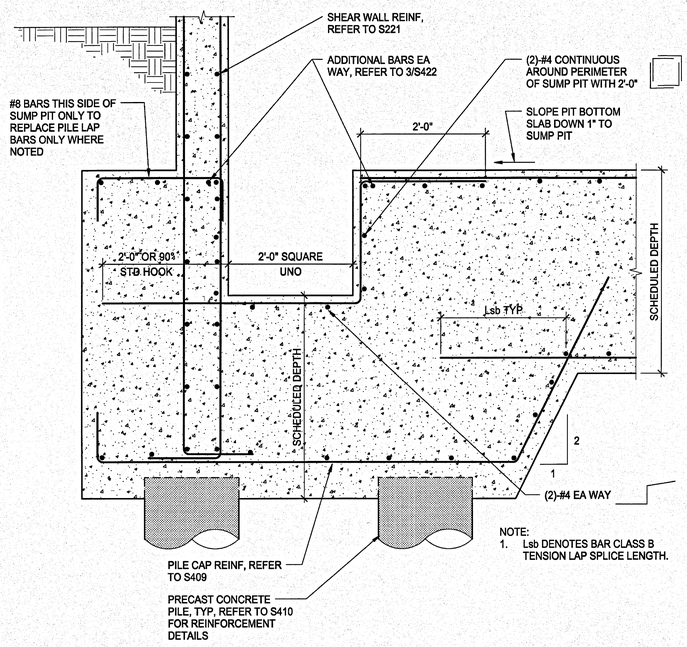

NOTE:
1. Lsb DENOTES BAR CLASS B TENSION LAP SPLICE LENGTH.

PILE CAP REINF AT SUMP PIT (8)
NO SCALE

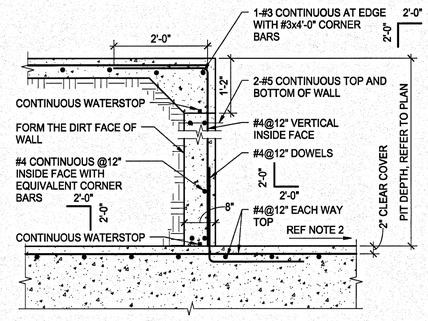

NOTES:
1. BRACE WALL AS REQUIRED UNTIL UPPER SLAB IS POURED AND HAS REACHED A STRENGTH OF 2500 PSI MINIMUM.
2. REFER TO PLAN FOR SUMP PIT, WHERE REQUIRED. SLOPE PIT BOTTOM SLAB 1" TO SUMP PIT.
3. REFER TO OTHER DETAILS FOR ELEVATOR SILL ANGLE AND DIVIDER BEAM CONNECTIONS, WHERE APPLICABLE.
4. GENERAL CONTRACTOR TO COORDINATE ELEVATOR PIT SIZE, DEPTH, SILL DETAIL, AND BLOCKOUT REQUIREMENTS WITH ELEVATOR MANUFACTURER'S APPROVED SHOP DRAWINGS.
5. WHERE ELEVATOR PIT SLAB IS BLOCKED OUT TO ALLOW FOR PLACEMENT OF HYDRAULIC ELEVATOR JACK, FILL BLOCKOUT WITH CONCRETE AFTER JACK IS SET.

03300-PA-SLRT-01
© COPYRIGHT WALTER P. MOORE AND ASSOCIATES, INC. 2013

TYPICAL ELEVATOR PIT (6)
NO SCALE

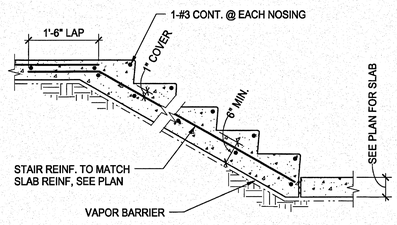

NOTES:
SEE ARCH'L FOR STAIR DIMENSIONS.

TYPICAL SLAB ON GRADE STAIR (2)
NO SCALE

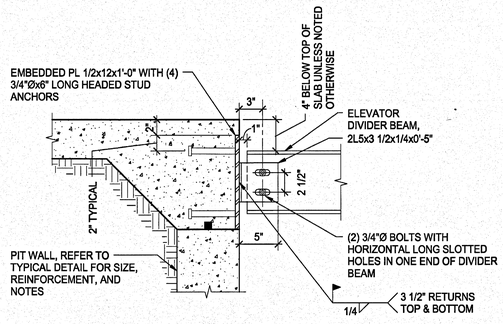

03300-PA-SLRT-03
© COPYRIGHT WALTER P. MOORE AND ASSOCIATES, INC. 2013

TYPICAL ELEVATOR DIVIDER BEAM CONNECTION TO PIT WALL (4)
NO SCALE

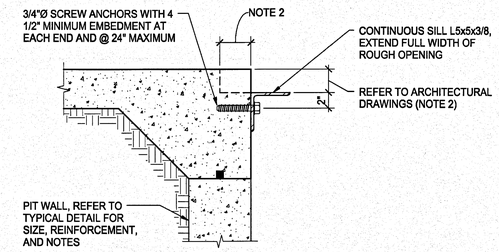

NOTES:
1. PROVIDE CONTINUOUS ELEVATOR SILL ANGLE AT THRESHOLD OF ELEVATOR OPENINGS IF REQUIRED BY ELEVATOR MANUFACTURER. REFER TO ARCHITECTURAL DRAWINGS FOR LOCATIONS.
2. VERIFY SIZE AND APPLICABILITY OF BLOCKOUT WITH ARCHITECTURAL AND ELEVATOR MANUFACTURER'S DRAWINGS.

03300-PA-SLRT-02
© COPYRIGHT WALTER P. MOORE AND ASSOCIATES, INC. 2013

TYPICAL ELEVATOR SILL ANGLE CONNECTION TO PIT WALL (7)
NO SCALE

SYM	ZONE	REVISIONS	DATE	APPROVED

WALTER P MOORE
WALTER P. MOORE AND ASSOCIATES, INC.
800 SOUTH ORANGE AVENUE, SUITE 1100
ORLANDO, FLORIDA 32801.3332
PHONE: 407.418.2218 FAX: 407.418.2257
CERTIFICATE OF AUTHORIZATION NO. 2818
007-11023.00
JAIME E. VASQUEZ P.E. NO. 49103
TO THE BEST OF THE ENGINEER'S KNOWLEDGE, THE PLANS AND SPECIFICATIONS COMPLY WITH THE APPLICABLE MINIMUM BUILDING CODES

SIGNATURES	DATE
DRAWN ANDREW MYERS	12.18.13
CHECKED JAIME E. VASQUEZ	12.18.13
SUBMITTED: ARCHITECT OF RECORD JAIME E. VASQUEZ	12.18.13
ST of LICENSURE: FL LICENSE NO: 49103	
APPROVED JOSEPH M. ALES	12/18/13
BRUCE KINNAIRD	12/18/13

NATIONAL AERONAUTICS AND SPACE ADMINISTRATION
JOHN F. KENNEDY SPACE CENTER, NASA
KENNEDY SPACE CENTER, FLORIDA

KSC CENTRAL CAMPUS
REPLACEMENT HEADQUARTERS BUILDING
PHASE 1
VOL. 1 OF 4

FOUNDATION TYPICAL DETAILS

S412

FILE NO.	SIZE	DWG. NO.
C-12070.00	F	79K39622 VOL 1
PCN. NO. 98745.1a		SHEET 149

KSC FORM 1-11 (3/76)(C/G 3/94)

NOTICE: When Government drawings, specifications, or other data are used for any purpose other than in connection with a definitely related Government procurement operation, the United States Government thereby incurs no responsibility nor obligation whatsoever; and the fact that the Government may have formulated, furnished, or in any way supplied the said drawings, specifications or other data is not to be regarded by implication or otherwise as in any manner licensing the holder or any other person or corporation, or conveying any rights or permission to manufacture, use, or sell any patented invention that may in any way be related thereto.

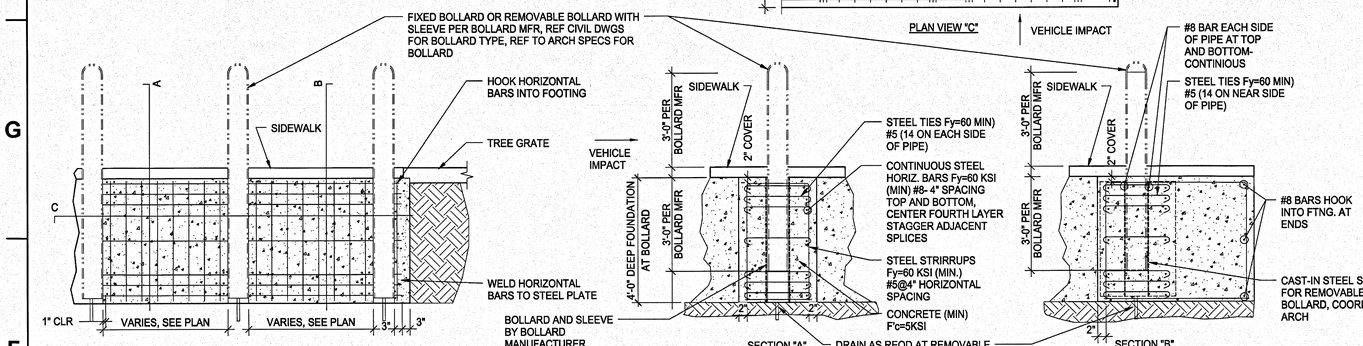

15000 LB VEHICLE AT 50 MPH ANTI-RAM BOLLARD DETAIL 1
NO SCALE

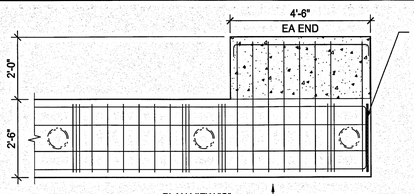

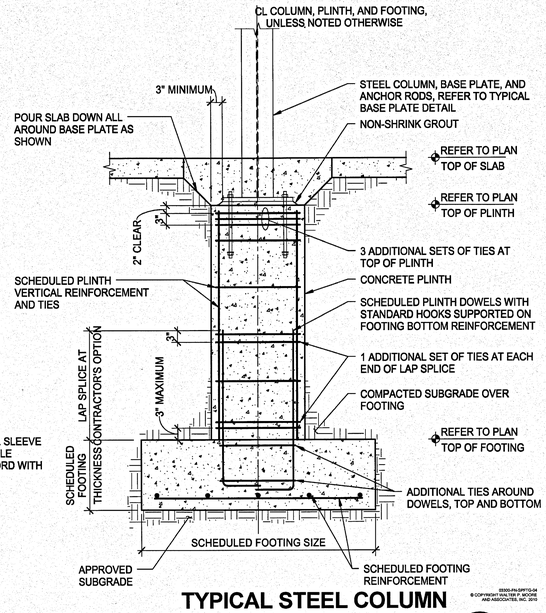

TYPICAL STEEL COLUMN ON SPREAD FOOTING WITH PLINTH 5
NO SCALE

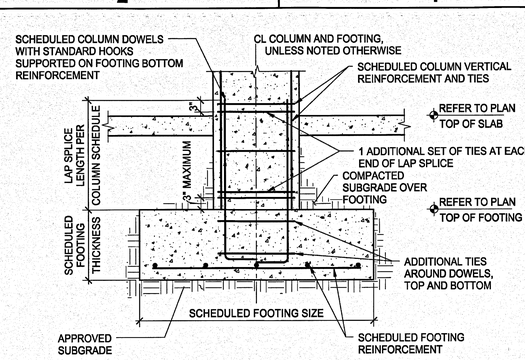

TYPICAL CONCRETE COLUMN ON SPREAD FOOTING 8
NO SCALE

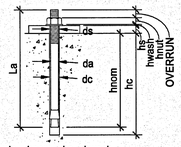

La ≥ La,min = hnom + hs + hwash + hnut + OVERRUN

EXPANSION AND UNDERCUT

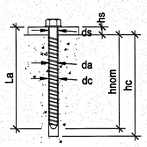

La ≥ La,min = hnom + hs

SCREW

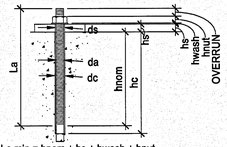

La ≥ La,min = hnom + hs + hwash + hnut + OVERRUN

ADHESIVE

ANCHOR SIZE FOR ORDER: "da" DIAMETER x "La" ANCHOR LENGTH
DRILLED HOLE: "dc" DIAMETER x "hc" DEEP

DEFINITIONS:

da = DIAMETER OF ANCHOR (IN)
dc = DIAMETER OF HOLE IN CONCRETE = DIAMETER OF DRILL BIT (IN)
ds = DIAMETER OF HOLE IN STEEL ATTACHMENT (IN)

La,min = MINIMUM LENGTH OF ANCHOR (IN)
La = ORDERED LENGTH OF ANCHOR (IN)

hnom = NOMINAL EMBEDMENT DEPTH (IN)
hc = DEPTH OF HOLE IN CONCRETE (IN)
hs = THICKNESS OF STEEL ATTACHMENT (IN)
hwash = THICKNESS OF WASHER (IN)
hnut = HEIGHT OF HEX NUT (IN)
OVERRUN = 1/4" UNLESS NOTED OTHERWISE

CONTRACTOR AND INSTALLER NOTES:

1. ONLY POST-INSTALLED ANCHOR PRODUCTS SPECIFIED IN THE CONTRACT DOCUMENTS SHALL BE USED WHERE SPECIFIED IN THE CONTRACT DOCUMENTS. THE CONTRACTOR SHALL PROVIDE SIGNED AND SEALED CALCULATIONS TO THE ENGINEER OF RECORD (EOR) FOR ANCHOR PRODUCTS SUBSTITUTED FOR THOSE INDICATED IN THE CONTRACT DOCUMENTS. THE CONTRACTOR SHALL OBTAIN APPROVAL FROM THE EOR PRIOR TO USING POST-INSTALLED ANCHORS FOR MISSING OR MISPLACED CAST-IN ANCHORS AND REINFORCEMENT.
2. ANCHOR LENGTHS SPECIFIED IN THE CONTRACT DOCUMENTS INDICATE THE *NOMINAL EMBEDMENT DEPTH.* REFER TO THE ANCHOR TYPE FOR THE DEFINITION OF NOMINAL EMBEDMENT DEPTH "hnom". IT IS THE RESPONSIBILITY OF THE CONTRACTOR TO DETERMINE THE CORRECT ANCHOR LENGTH "La" FOR ORDER BASED ON THE SPECIFIED NOMINAL EMBEDMENT DEPTH, ATTACHMENT THICKNESS AND OTHER ANCHOR CHARACTERISTICS NOTED.
3. MINIMUM ANCHOR LENGTH "La,min" IS DETERMINED AS SHOWN FOR EACH ANCHOR. ORDER AND INSTALL AN ANCHOR LENGTH EQUAL TO OR GREATER THAN THIS VALUE. INSTALLED ANCHOR LENGTHS SHALL NOT HAVE NOMINAL EMBEDMENT DEPTHS THAT EXCEED THEIR CORRESPONDING MINIMUM CONCRETE THICKNESS LIMITS. REFER TO ANCHOR'S ICC-ES EVALUATION SERVICE REPORT (ESR).
4. REFER TO THE ANCHOR'S ICC-ES EVALUATION SERVICE REPORT (ESR) FOR DRILL BIT TYPE AND DIAMETER, AND DEPTH OF HOLE TO BE DRILLED IN THE CONCRETE.
5. FOLLOW THE MANUFACTURER'S PRINTED INSTALLATION INSTRUCTIONS (MPII).

TYPICAL POST-INSTALLED ANCHOR INFORMATION 2
NO SCALE

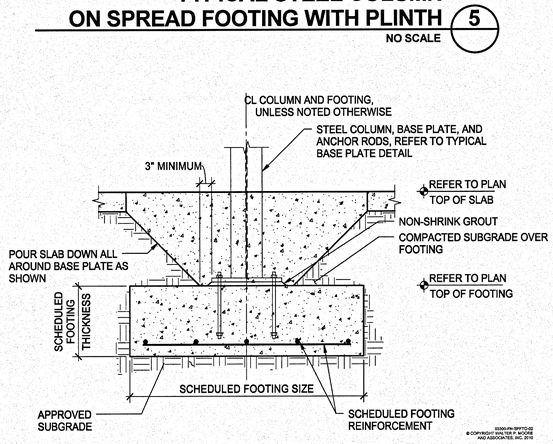

TYPICAL STEEL COLUMN ON SPREAD FOOTING 6
NO SCALE

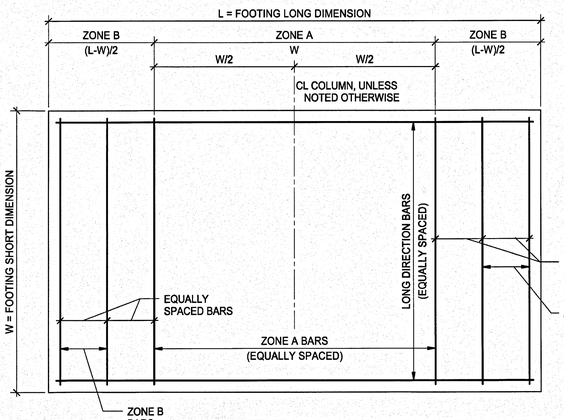

NOTES:

1. THIS DETAIL SHALL BE USED FOR ALL RECTANGULAR FOOTINGS UNLESS LAYOUT OF BARS IS OTHERWISE SPECIFIED ON DRAWINGS.
2. REBAR STEEL DETAILER SHALL PROVIDE BAR PLACEMENT DIAGRAMS FOR EACH RECTANGULAR FOOTING.
3. DEFINITIONS:
   N = TOTAL NUMBER OF BARS IN SHORT DIRECTION
   Na = NUMBER OF BARS IN ZONE A
   Na = 2N/(L/W + 1), ROUNDED UP TO THE NEAREST INTEGER
   Nb = NUMBER OF BARS IN ZONE B
   Nb = (N-Na)/2

TYPICAL BAR PLACEMENT DIAGRAM FOR RECTANGULAR SPREAD FOOTING 3
NO SCALE

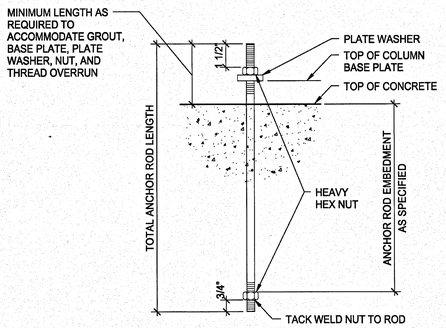

NOTES:

1. REFER TO COLUMN SCHEDULE FOR ANCHOR ROD SIZE AND EMBEDMENT.
2. UNLESS NOTED OTHERWISE, ALL ANCHOR ROD NUTS SHALL BE TIGHTENED TO A "SNUG TIGHT" CONDITION AS DEFINED BY AISC AFTER THE CONCRETE IS AT LEAST 14 DAYS OLD.
3. THE HOLE IN THE PLATE WASHER SHALL BE 1/16" LARGER THAN THE ROD DIAMETER.

TYPICAL ANCHOR ROD TYPE "A" 4
NO SCALE

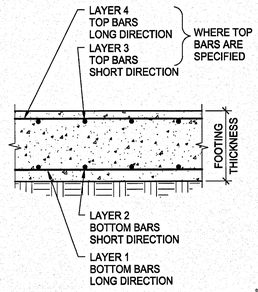

TYPICAL BAR LAYER DIAGRAM, RECTRANGULAR SPREAD FOOTING 7
NO SCALE

SYM	ZONE	REVISIONS	DATE APPROVED

WALTER P MOORE
WALTER P. MOORE AND ASSOCIATES, INC.
500 SOUTH ORANGE AVENUE, SUITE 1100
ORLANDO, FLORIDA 32801.3832
PHONE: 407.418.2218 FAX: 407.418.2267
CERTIFICATE OF AUTHORIZATION NO. 3616
JAIME E. VASQUEZ P.E. NO. 49103
TO THE BEST OF THE ENGINEER'S KNOWLEDGE, THE PLANS AND SPECIFICATIONS COMPLY WITH THE APPLICABLE MINIMUM BUILDING CODES

SIGNATURES	DATE
DRAWN ANDREW MYERS	12.18.13
CHECKED JAIME E. VASQUEZ	12.18.13
SUBMITTED - ARCHING OF RECORD JAIME E. VASQUEZ	12.18.13
ST of LICENSURE: FL LICENSE NO: 49103	
APPROVED JOSEPH M. ALES	12/18/13
BRUCE KINNAIRD	12/18/13

NATIONAL AERONAUTICS AND SPACE ADMINISTRATION
JOHN F. KENNEDY SPACE CENTER, NASA
KENNEDY SPACE CENTER, FLORIDA

KSC CENTRAL CAMPUS
REPLACEMENT HEADQUARTERS BUILDING
PHASE 1
VOL. 1 OF 4

FOUNDATION TYPICAL DETAILS

FILE NO.	SIZE	DWG. NO.
C-12070.00	F	79K39622 VOL 1
PCN. NO. 98745.1a		SHEET 150

S413

KSC FORM 1-11 (3/76)(C/G 3/94)

NOTICE: When Government drawings, specifications, or other data are used for any purpose other than in connection with a definitely related Government procurement operation, the United States Government thereby incurs no responsibility nor obligation whatsoever; and the fact that the Government may have formulated, furnished, or in any way supplied the said drawings, specifications or other data is not to be regarded by implication or otherwise as in any manner licensing the holder or any other person or corporation, or conveying any rights or permission to manufacture, use, or sell any patented invention that may in any way be related thereto.

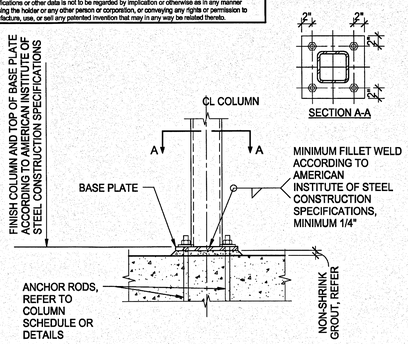

NOTES:
1. USE OVERSIZED HOLES FOR ANCHOR RODS ACCORDING TO AMERICAN INSTITUTE OF STEEL CONSTRUCTION.
2. PLATE WASHERS WITH STANDARD HOLES SHALL BE INSTALLED OVER OVERSIZED HOLES.
3. CONTRACTOR SHALL PROVIDE TEMPLATE FOR ANCHOR ROD INSTALLATION.
4. MINIMUM GROUT THICKNESS IS 1" UNLESS NOTED OTHERWISE ON PLANS, DETAILS, OR IN GROUT THICKNESS SCHEDULE.

TYPICAL RECTANGULAR/SQUARE HSS COLUMN BASE CONNECTION 1

NO SCALE

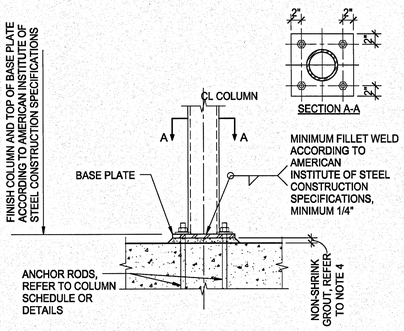

NOTES:
1. USE OVERSIZED HOLES FOR ANCHOR RODS ACCORDING TO AMERICAN INSTITUTE OF STEEL CONSTRUCTION.
2. PLATE WASHERS WITH STANDARD HOLES SHALL BE INSTALLED OVER OVERSIZED HOLES.
3. CONTRACTOR SHALL PROVIDE TEMPLATE FOR ANCHOR ROD INSTALLATION.
4. MINIMUM GROUT THICKNESS IS 1" UNLESS NOTED OTHERWISE ON PLANS, DETAILS, OR IN GROUT THICKNESS SCHEDULE.

TYPICAL ROUND HSS COLUMN BASE CONNECTION 2

NO SCALE

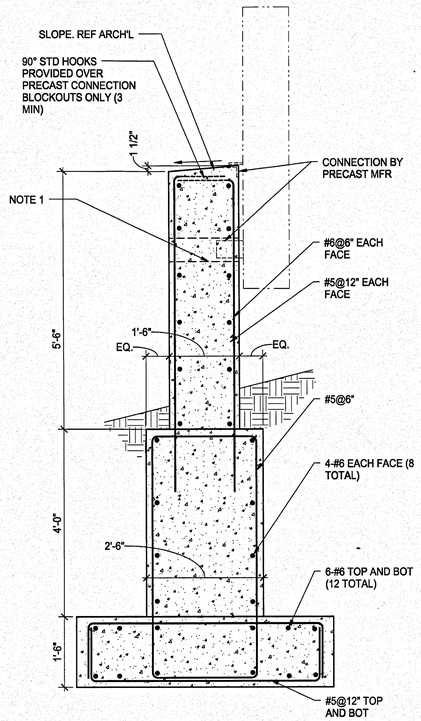

NOTE:
1. 8"x8" BLOCKOUT, COORDINATE SIZE AND LOCATION WITH PRECAST MFR. DRY-PACK WITH NON-METALLIC NON-SHRINK GROUT AFTER ERECTION
2. REFER TO 3/S422 FOR ADDITIONAL REINFORCEMENT TO BE PROVIDED AROUND PRECAST BLOCKOUTS

ANTI-RAM MONUMENTAL SIGN SUPPORT 4

3/4" = 1'-0"

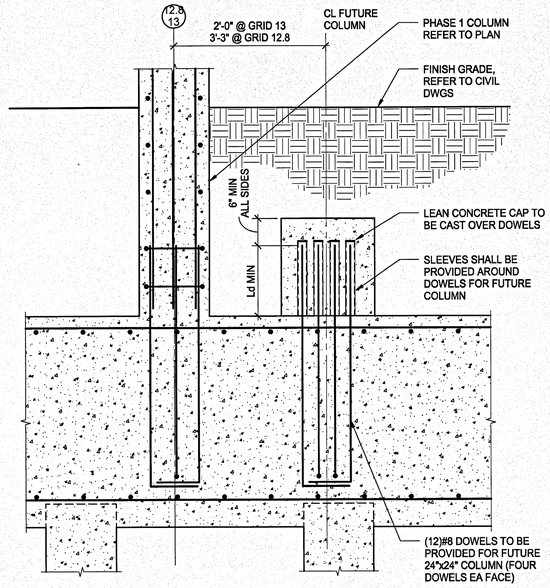

FUTURE COLUMN DOWELS DETAIL 5

3/4" = 1'-0"

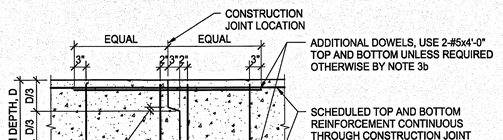

NOTES:
1. CONTRACTOR SHALL SUBMIT PROPOSED CONSTRUCTION JOINT LAYOUT AS A SHOP DRAWING FOR APPROVAL PRIOR TO DETAILING REINFORCEMENT AND A MINIMUM OF TWO WEEKS PRIOR TO POUR.
2. CONSTRUCTION JOINT LOCATIONS SHALL BE COORDINATED WITH REINFORCING STEEL SUPPLIER AND ERECTOR.
3. ACCEPTABLE JOINT LOCATIONS ARE AS FOLLOWS:
   a. FOR BEAMS NOT SUPPORTING INTERSECTING BEAMS, PLACE JOINT WITHIN MIDDLE THIRD OF SPAN.
   b. FOR BEAMS SUPPORTING INTERSECTING BEAMS, CHECK WITH STRUCTURAL ENGINEER FOR JOINT LOCATIONS AND DOWEL REQUIREMENTS.
4. SHOP DRAWINGS SHALL SHOW ALL REQUIRED ADDITIONAL REINFORCEMENT AT JOINTS.

©2201-FIN-GFORM-00
© COPYRIGHT WALTER P. MOORE AND ASSOCIATES, INC. 2013

TYPICAL CONSTRUCTION JOINT IN GRADE BEAM 8

NO SCALE

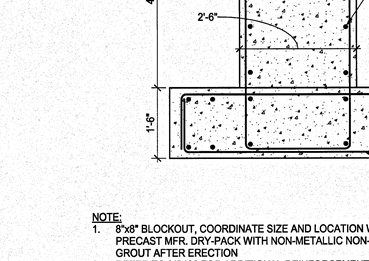

BASE PLATE SCHEDULE 6

1 1/2" = 1'-0"

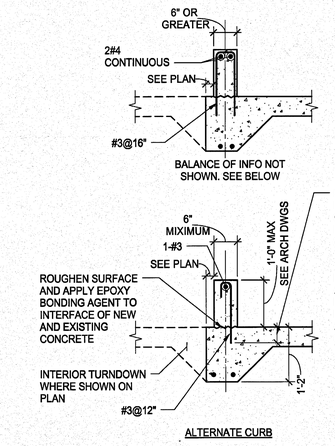

NOTE:
REFERENCE 7/S411 FOR BLANCE OF INFORMATION NOT SHOWN.

TYPICAL CONCRETE CURB DETAILS 3

NO SCALE

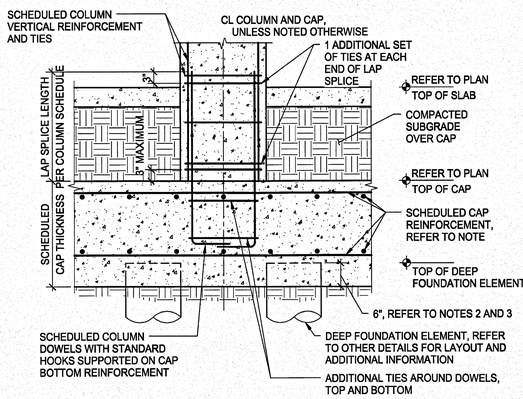

NOTES:
1. UNLESS NOTED OTHERWISE, PLACE LONG DIRECTION REINFORCEMENT IN OUTSIDE LAYER. REFER TO SCHEDULE FOR HOOK REQUIREMENTS.
2. SCHEDULED CAP THICKNESS ACCOUNTS FOR A 6" EMBEDMENT TO ACCOMMODATE A DEEP FOUNDATION CUT-OFF TOLERANCE OF -3" WHILE MAINTAINING THE REQUIRED MINIMUM EMBEDMENT OF 3". FOR GRAVITY COLUMNS ONLY, OR AT OTHER LOCATIONS APPROVED BY THE ENGINEER-OF-RECORD, CAP THICKNESS MAY BE REDUCED BY A MAXIMUM OF 3", PROVIDED THAT:
   A. THE TOP OF CAP ELEVATION REMAINS AT THE PROPER ELEVATION,
   B. THE PLACEMENT OF ALL REINFORCEMENT RELATIVE TO THE TOP OF CAP IS MAINTAINED, AND
   C. A MINIMUM EMBEDMENT OF 3" IS PROVIDED FOR ALL DEEP FOUNDATION ELEMENTS.

CAP THICKNESS MUST BE INCREASED AS REQUIRED TO MAINTAIN A MINIMUM 3" EMBEDMENT FOR ALL DEEP FOUNDATION ELEMENTS THAT FALL OUTSIDE THE -3" CUT-OFF TOLERANCE.

©2201-FIN-FCAP-01
© COPYRIGHT WALTER P. MOORE AND ASSOCIATES, INC. 2013

TYPICAL CONCRETE COLUMN ON CAP 7

NO SCALE

SYM	ZONE		DATE	APPROVED

REVISIONS

WALTER P MOORE
WALTER P. MOORE AND ASSOCIATES, INC.
800 SOUTH ORANGE AVENUE, SUITE 1100
ORLANDO, FLORIDA 32801-3552
PHONE: 407.418.2218 FAX: 407.418.2267
CERTIFICATE OF AUTHORIZATION NO. 3818
807-11023-00
JAIME E. VASQUEZ P.E. NO. 49103
TO THE BEST OF THE ENGINEERS KNOWLEDGE, THE PLANS AND SPECIFICATIONS COMPLY WITH THE APPLICABLE MINIMUM BUILDING CODES

SIGNATURES	DATE
DRAWN ANDREW MYERS	12.18.13
CHECKED JAIME E. VASQUEZ	12.18.13
SUBMITTED: ARCHITECT OF RECORD JAIME E. VASQUEZ	12.18.13
ST OF LICENSURE: FL LICENSE NO: 49103	
APPROVED JOSEPH M. ALES	12/18/13
BRUCE KINNAIRD	12/18/13

NATIONAL AERONAUTICS AND SPACE ADMINISTRATION
JOHN F. KENNEDY SPACE CENTER, NASA
KENNEDY SPACE CENTER, FLORIDA

KSC CENTRAL CAMPUS
REPLACEMENT HEADQUARTERS BUILDING
PHASE 1
VOL. 1 OF 4

FOUNDATION TYPICAL DETAILS

FILE NO.	SIZE	DWG. NO.
C-12070.00	F	79K39622 VOL 1
PCN. NO. 98745.1a		SHEET 151

S414

KSC FORM 1-11 (3/76)(C/G 3/94)

NOTICE: When Government drawings, specifications, or other data are used for any purpose other than in connection with a definitely related Government procurement operation, the United States Government thereby incurs no responsibility nor any obligation whatsoever; and the fact that the Government may have formulated, furnished, or in any way supplied the said drawings, specifications or other data is not to be regarded by implication or otherwise as in any manner licensing the holder or any other person or corporation, or conveying any rights or permission to manufacture, use, or sell any patented invention that may in any way be related thereto.

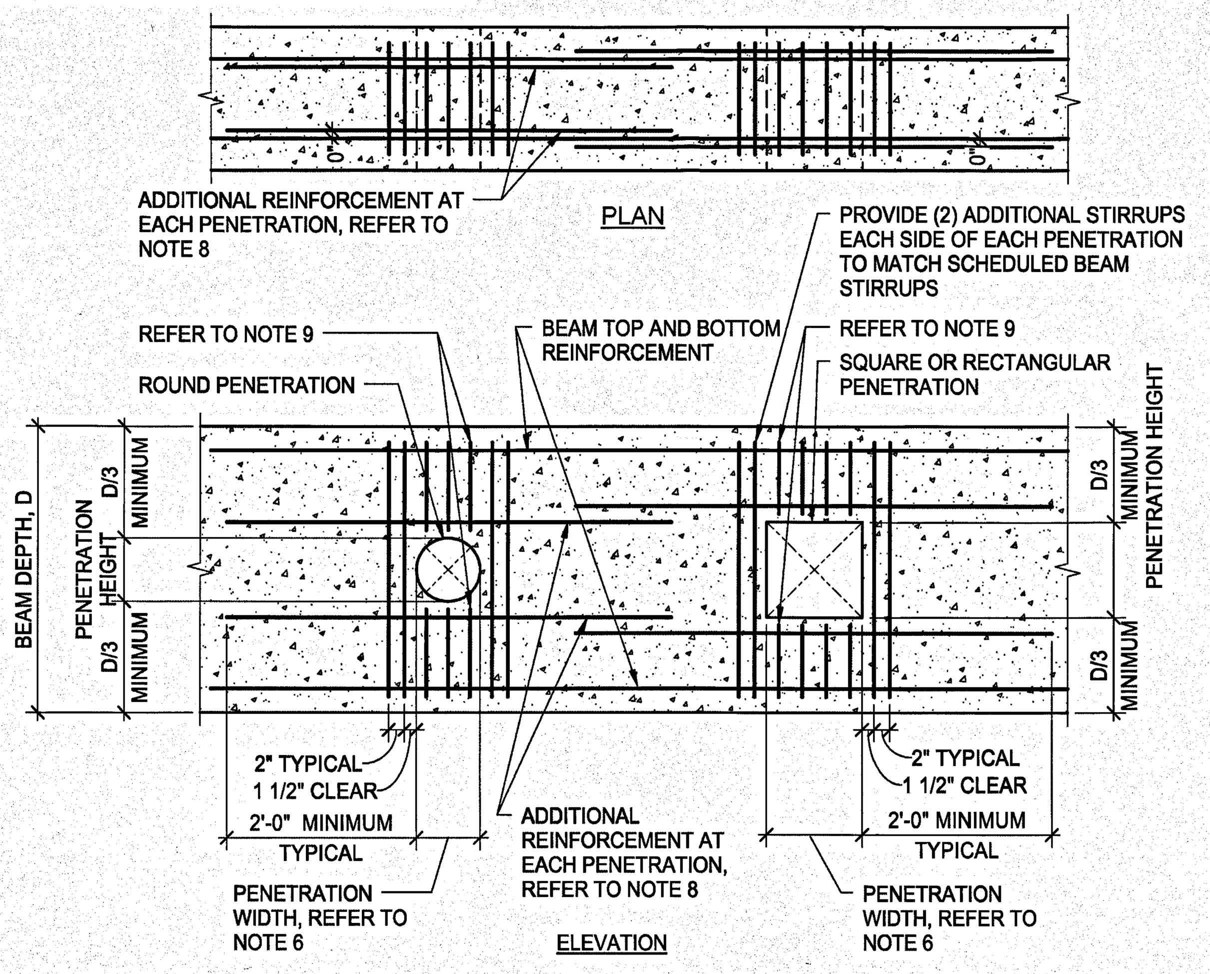

NOTES:
1. GENERAL CONTRACTOR SHALL COORDINATE LOCATION, SIZE, AND ELEVATION AND INCLUDE IN HIS CONTRACT PRICE ALL REQUIRED HORIZONTAL PENETRATIONS THROUGH CONCRETE BEAMS WHETHER SHOWN ON STRUCTURAL DRAWINGS OR NOT.
2. WHERE BEAM PENETRATIONS ARE REQUIRED BUT ARE NOT SPECIFICALLY DETAILED ON THE STRUCTURAL DRAWINGS, CONTRACTOR SHALL SUBMIT DRAWINGS SHOWING DIMENSIONS AND LOCATIONS OF ALL REQUIRED PENETRATIONS FOR REVIEW AND APPROVAL.
3. "D" DENOTES THE DEPTH OF BEAM.
4. CLEAR SPACING BETWEEN PENETRATIONS SHALL BE 24" MINIMUM UNLESS NOTED OTHERWISE BY THE STRUCTURAL ENGINEER.
5. PENETRATIONS SHALL BE LOCATED ACCORDING TO THE FOLLOWING CRITERIA:
   a. FOR BEAMS NOT SUPPORTING INTERSECTING BEAMS LOCATE PENETRATIONS WITHIN TWO FEET EITHER SIDE OF BEAM MIDSPAN.
   b. FOR BEAMS SUPPORTING INTERSECTING BEAMS CHECK WITH STRUCTURAL ENGINEER.
6. PENETRATION WIDTH MUST NOT EXCEED PENETRATION HEIGHT, UNLESS NOTED OTHERWISE ON THE STRUCTURAL DRAWINGS.
7. FOR LOCATIONS AND/OR SIZES OF PENETRATIONS NOT CONFORMING TO THE ABOVE CRITERIA AND NOT OTHERWISE DETAILED ON THE STRUCTURAL DRAWINGS, CONTRACTOR SHALL COORDINATE REQUIRED ADDITIONAL REINFORCEMENT WITH THE STRUCTURAL ENGINEER.
8. PROVIDE THE FOLLOWING REINFORCEMENT AT EACH SLEEVE, UNLESS NOTED OTHERWISE ON THE STRUCTURAL DRAWINGS:
   1-#5 TOP AND BOTTOM AT BEAMS WITH WIDTHS LESS THAN 9".
   2-#5 TOP AND BOTTOM AT BEAMS WITH 2-LEG STIRRUPS.
   4-#5 TOP AND BOTTOM AT BEAMS WITH 4-LEG STIRRUPS.
   "N"-#5 TOP AND BOTTOM AT BEAMS WITH "N"-LEG STIRRUPS.
9. PROVIDE ADDITIONAL STIRRUPS ABOVE AND BELOW PENETRATIONS AT SPACING NOT TO EXCEED ONE THIRD OF THE SCHEDULED STIRRUP SPACING, UNLESS DETAILED OTHERWISE ON THE STRUCTURAL DRAWINGS.
10. SCHEDULED BEAM STIRRUPS NOT SHOWN FOR CLARITY.

03300-FL-BMOPG-01
© COPYRIGHT WALTER P. MOORE AND ASSOCIATES, INC. 2012

TYPICAL HORIZONTAL PENETRATION IN CONCRETE BEAM (1)
NO SCALE

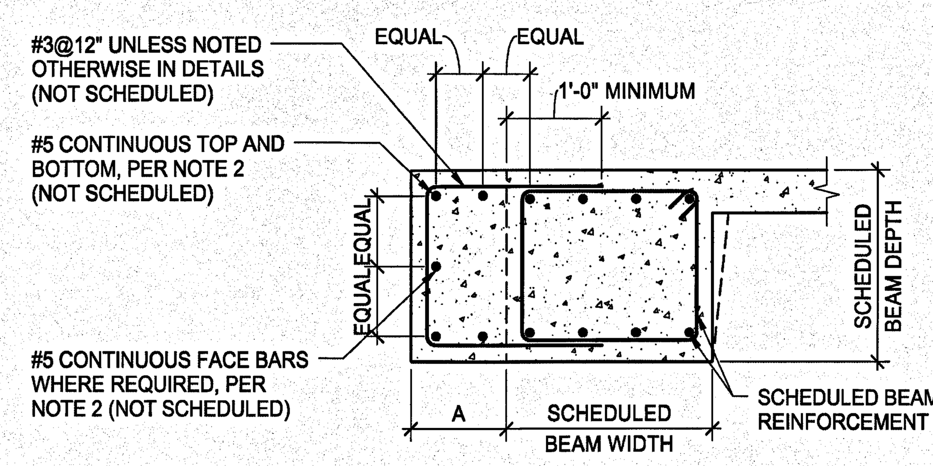

NOTES:
1. REFER TO PLAN FOR WIDENED DIMENSION "A".
2. FOR BEAMS WIDENED 3" OR MORE, PROVIDE THE FOLLOWING ADDITIONAL REINFORCEMENT (FACE BARS ARE ONLY REQUIRED WHEN DEPTH OF WIDENED BEAM SECTION EXCEEDS 22"):

3"≤A≤12":	1-#5 TOP, 1-#5 BOTTOM, AND #5@12" FACE BARS
12"<A≤24":	2-#5 TOP, 2-#5 BOTTOM, AND #5@8" FACE BARS
24"<A≤36":	3-#5 TOP, 3-#5 BOTTOM, AND #5@6" FACE BARS
A>36":	CONSULT WITH STRUCTURAL ENGINEER

03300-FL-PNJST-19
© COPYRIGHT WALTER P. MOORE AND ASSOCIATES, INC. 2012

TYPICAL WIDENED CONCRETE BEAM (4)
NO SCALE

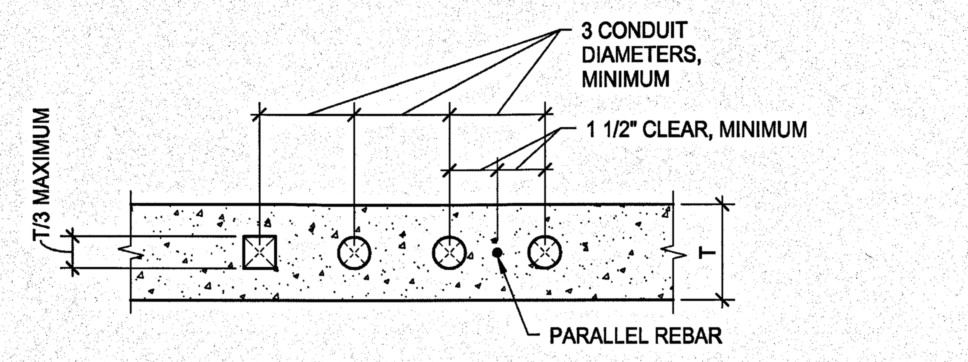

NOTES:
1. PLACE ALL CONDUITS, WHETHER IN SINGLE OR MULTIPLE LAYERS, WITHIN THE CENTER THIRD OF THE OVERALL SLAB THICKNESS.
2. DO NOT SPACE CONDUITS CLOSER THAN THREE DIAMETERS OR WIDTHS ON CENTER.
3. DO NOT EMBED CONDUITS AND PIPES OF ALUMINUM IN STRUCTURAL CONCRETE.
4. PLACE THE CONDUITS BETWEEN TOP AND BOTTOM SLAB REINFORCEMENT AND LOCATE AS CLOSE AS POSSIBLE TO THE MID-DEPTH OF THE SLAB.
5. PROVIDE THE SAME MINIMUM CONCRETE COVER FOR CONDUITS AS THAT OF THE SLAB MAIN REINFORCEMENT.
6. DO NOT PLACE CONDUIT ADJACENT TO NOR TIE CONDUIT TO PARALLEL REINFORCING BARS.

03300-FL-SLCON-01
© COPYRIGHT WALTER P. MOORE AND ASSOCIATES, INC. 2010

TYPICAL CONDUITS EMBEDDED IN STRUCTURAL SLABS (7)
NO SCALE

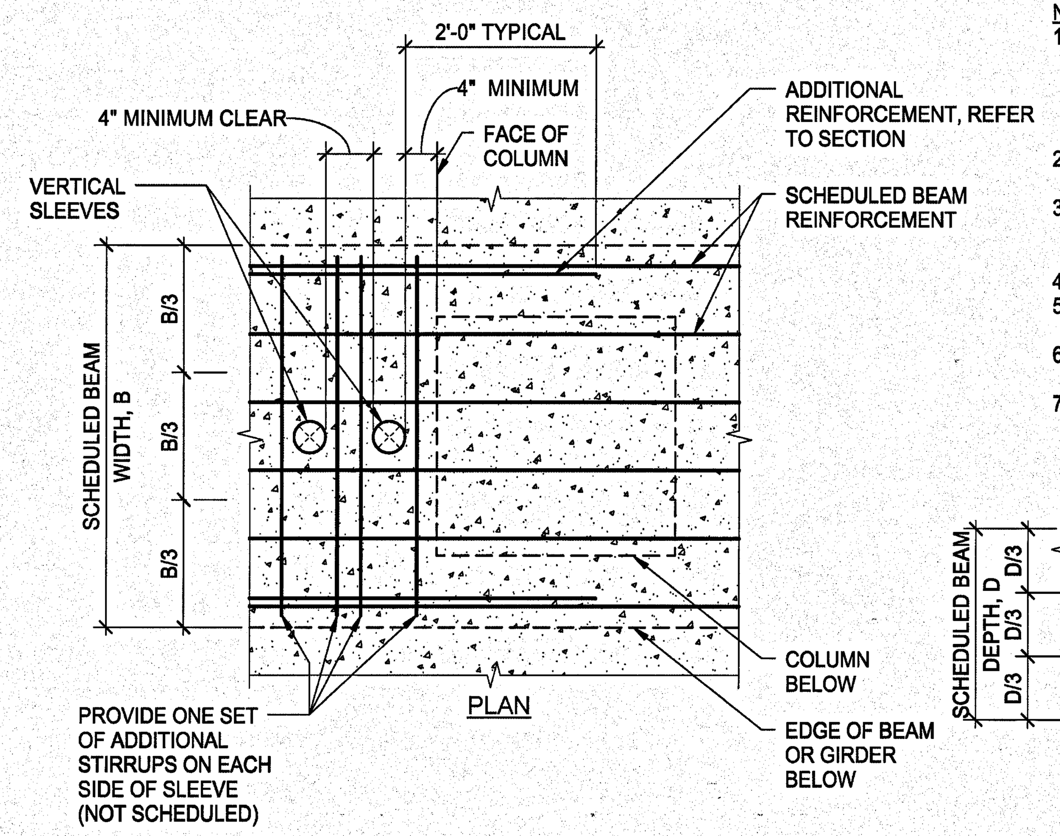

NOTES:
1. GENERAL CONTRACTOR SHALL COORDINATE REQUIRED BEAM SLEEVES WITH MECHANICAL, ELECTRICAL, AND PLUMBING CONTRACTORS. REQUIRED SLEEVES MAY OR MAY NOT BE SHOWN ON THE STRUCTURAL DRAWINGS. GENERAL CONTRACTOR SHALL SUBMIT PLAN SHOWING LAYOUT OF ALL SLEEVES WITH FORMWORK SHOP DRAWING SUBMITTAL.
2. SLEEVES SHALL BE LOCATED WITHIN THE MIDDLE THIRD OF THE SCHEDULED BEAM WIDTH.
3. CONTINUOUS BEAM REINFORCEMENT MAY BE SLIGHTLY DISPLACED (3" MAXIMUM) OR ADJACENT BARS BUNDLED (2 BAR BUNDLES MAXIMUM) TO FACILITATE SLEEVE INSTALLATION. DO NOT CUT, OFFSET, OR BEND REINFORCEMENT.
4. SLEEVES OCCURRING ON OPPOSITE SIDES OF A COLUMN MUST BE IN LINE.
5. THE OUTSIDE DIAMETER OF A SLEEVE MAY NOT EXCEED 15% OF THE SCHEDULED WIDTH OF THE BEAM THROUGH WHICH IT MUST PASS.
6. THE CONTRACTOR SHALL CONTACT THE ENGINEER OF RECORD WHEN A SLEEVE SIZE OR LOCATION DOES NOT MEET THE ABOVE CONDITIONS.
7. SCHEDULED BEAM STIRRUPS NOT SHOWN FOR CLARITY.

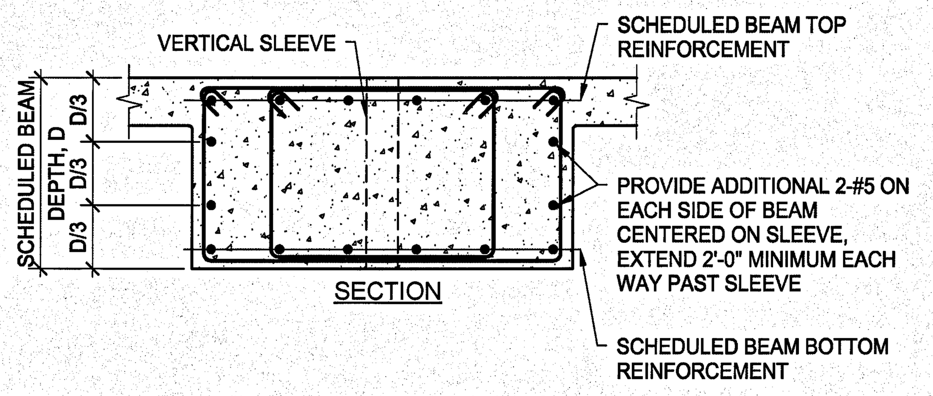

TYPICAL VERTICAL PENETRATION IN CONCRETE BEAM (2)
NO SCALE

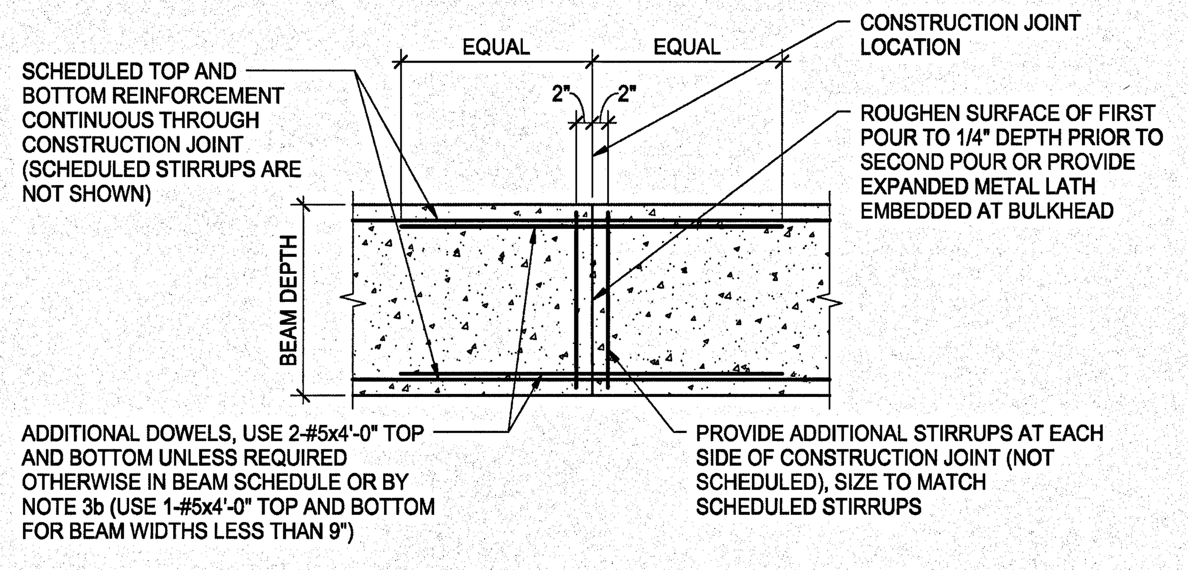

NOTES:
1. CONTRACTOR SHALL SUBMIT PROPOSED CONSTRUCTION JOINT LAYOUT AS A SHOP DRAWING FOR APPROVAL PRIOR TO DETAILING REINFORCEMENT AND A MINIMUM OF TWO WEEKS PRIOR TO FIRST POUR.
2. CONSTRUCTION JOINT LOCATIONS SHALL BE COORDINATED WITH REINFORCING STEEL SUPPLIER AND ERECTOR.
3. ACCEPTABLE JOINT LOCATIONS ARE AS FOLLOWS:
   a. FOR BEAMS NOT SUPPORTING INTERSECTING BEAMS, PLACE JOINT WITHIN MIDDLE THIRD OF SPAN.
   b. FOR BEAMS SUPPORTING INTERSECTING BEAMS, CHECK WITH STRUCTURAL ENGINEER FOR JOINT LOCATIONS AND DOWEL REQUIREMENTS.
4. SHOP DRAWINGS SHALL SHOW ALL REQUIRED ADDITIONAL REINFORCEMENT AT JOINTS.

03251-FL-PNJST-01
© COPYRIGHT WALTER P. MOORE AND ASSOCIATES, INC. 2012

TYPICAL CONSTRUCTION JOINT IN CONCRETE BEAM (5)
NO SCALE

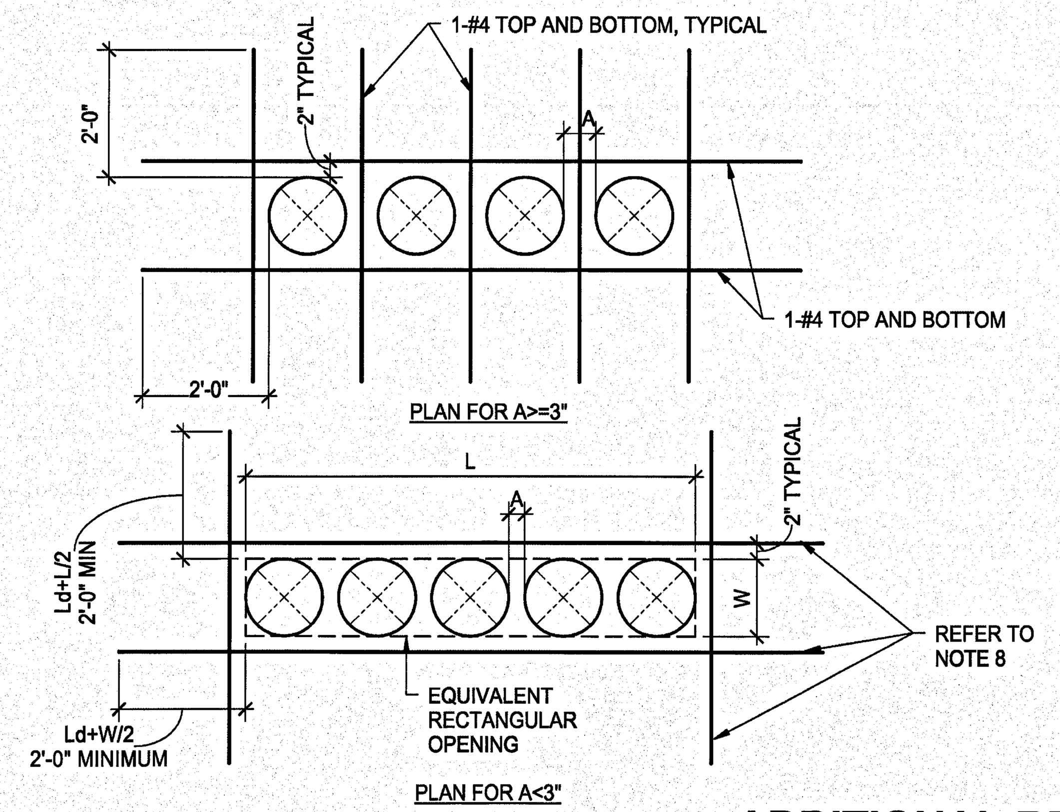

NOTES:
1. WHERE CLEAR SPACING BETWEEN ADJACENT SLEEVES IS LESS THAN 3", THE SLEEVE GROUP SHALL BE TREATED AS AN EQUIVALENT RECTANGULAR OPENING WITH LENGTH "L" AND WIDTH "W" AS SHOWN.
2. WHERE CLEAR SPACING BETWEEN ADJACENT SLEEVES IS GREATER THAN OR EQUAL TO 3", SCHEDULED SLAB BAR REINFORCEMENT SHALL BE OFFSET AS REQUIRED TO MISS SLEEVES.
3. REINFORCEMENT SHOWN IS IN ADDITION TO SCHEDULED SLAB REINFORCEMENT.
4. SCHEDULED SLAB MESH REINFORCEMENT MAY BE CUT AS REQUIRED TO MISS PIPE SLEEVES.
5. REFER TO MECHANICAL, ELECTRICAL, AND PLUMBING DRAWINGS FOR LOCATION AND SIZE OF SLEEVES.
6. ISOLATED PIPE SLEEVES THAT ARE SMALLER THAN 5" AND DO NOT INTERRUPT REINFORCEMENT DO NOT REQUIRE THE USE OF THIS DETAIL.
7. THIS DETAIL SHOULD NOT BE USED FOR OPENING GROUPS WITH DIAMETERS LARGER THAN 12". CONSULT STRUCTURAL ENGINEER FOR FRAMING OF SUCH CONDITIONS.
8. PROVIDE HALF OF INTERRUPTED REINFORCEMENT PLUS ONE ADDITIONAL BAR OF SAME SIZE ON EACH SIDE OF EQUIVALENT RECTANGULAR OPENING. PROVIDE A MINIMUM OF 1-#4 TOP AND BOTTOM EACH SIDE OF OPENING.

ADDITIONAL REINFORCEMENT AROUND PIPE SLEEVES (3)
NO SCALE

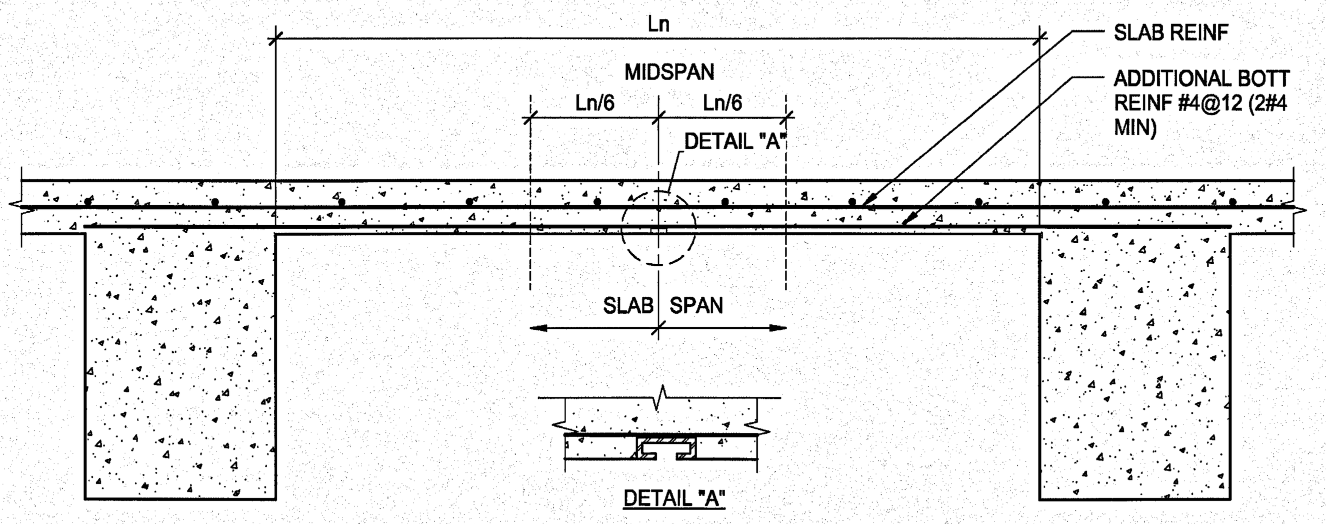

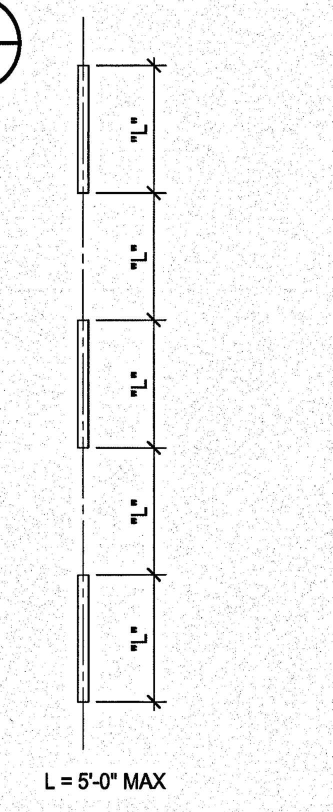

SCHEMATIC PLAN
DISCRETE UNISTRUT PLACEMENT

NOTES:
1. UNISTRUT OR ANY OTHER CONTINUOUS INSERT THAT BLOCKS OUT CONCRETE SHOULD BE PLACED PARALLEL TO SLAB SPAN. IF NOT, DISCRETE LENGTHS OF UNISTRUT MAY BE PLACED PERENDICULAR WITHIN Ln/6 OF MIDSPAN. SEE DETAIL DISCRETE UNISTRUT PLACEMENT THIS SHEET.
2. UNISTRUT MAY NOT BE DEEPER THAN SLAB BOTTOM STEEL CLEAR COVER OR 1".
3. FOR ANY OTHER CONDITIONS, CONSULT ENGINEER.

TYPICAL DETAIL UNISTRUT EMBEDED IN ONE-WAY SLAB (6)
NO SCALE

SYM	ZONE		DATE	APPROVED

REVISIONS

WALTER P MOORE
WALTER P. MOORE AND ASSOCIATES, INC.
300 SOUTH ORANGE AVENUE, SUITE 1160
ORLANDO, FLORIDA 32801.3332
PHONE: 407.418.2218 FAX: 407.418.2257
CERTIFICATE OF AUTHORIZATION NO. 3818
S07-11023-00
JAIME E. VASQUEZ P.E. NO. 49103
TO THE BEST OF THE ENGINEER'S KNOWLEDGE, THE PLANS AND SPECIFICATIONS COMPLY WITH THE APPLICABLE MINIMUM BUILDING CODES

SIGNATURES	DATE
DRAWN ANDREW MYERS	12.18.13
CHECKED JAIME E. VASQUEZ	12.18.13
SUBMITTED: ARCH/ENG OF RECORD JAIME E. VASQUEZ	12.18.13
ST of LICENSURE: FL LICENSE NO: 49103	
APPROVED JOSEPH M. ALES	12.18.13
BRUCE KINNAIRD	12/18/13

NATIONAL AERONAUTICS AND SPACE ADMINISTRATION
JOHN F. KENNEDY SPACE CENTER, NASA
KENNEDY SPACE CENTER, FLORIDA

KSC CENTRAL CAMPUS
REPLACEMENT HEADQUARTERS BUILDING
PHASE 1
VOL. 1 OF 4

TYPICAL DETAILS

FILE NO.	SIZE	DWG. NO.
C-12070.00	F	79K39622 VOL 1

PCN. NO. 98745.1a
S421

NOTICE: When Government drawings, specifications, or other data are used for any purpose other than in connection with a definitely related Government procurement operation, the United States Government thereby incurs no responsibility nor obligation whatsoever; and the fact that the Government may have formulated, furnished, or in any way supplied the said drawings, specifications or other data is not to be regarded by implication or otherwise as in any manner licensing the holder or any other person or corporation, or conveying any rights or permission to manufacture, use, or sell any patented invention that may in any way be related thereto.

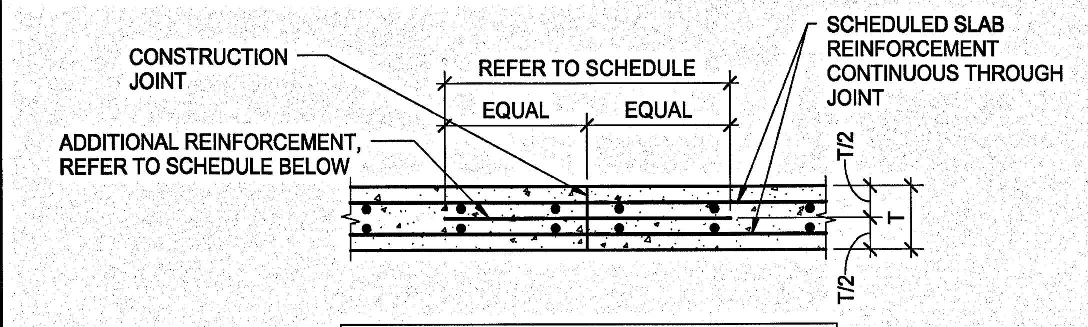

ADDITIONAL REINFORCEMENT SCHEDULE	
SLAB THICKNESS	REINFORCEMENT
T=4"	#4x2'-6" @ 18"
4"<T<=6"	#4x2'-6" @ 12"
6"<T<=8"	#5x3'-0" @ 12"
8<T<=12"	#6x3'-8" @ 12"

NOTES:
1. CONSTRUCTION JOINTS SHOULD BE LOCATED ON THE MIDDLE THIRD OF THE SLAB SPAN.
2. CONCRETE SURFACE AT CONSTRUCTION JOINT SHALL BE CLEAN AND FREE OF LAITANCE.
3. DO NOT USE FOR POST-TENSIONED SLABS.

© COPYRIGHT WALTER P. MOORE AND ASSOCIATES, INC.

TYPICAL CONSTRUCTION JOINT IN CONCRETE STRUCTURAL SLAB (1)

NO SCALE

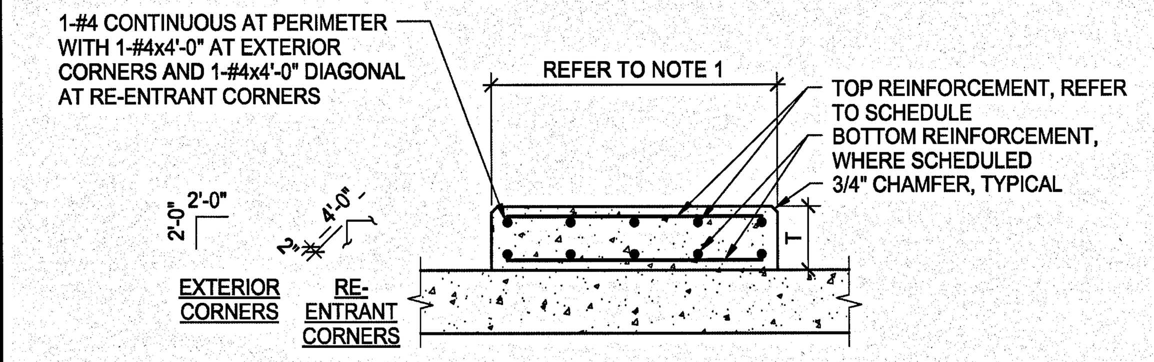

HOUSEKEEPING PAD REINFORCEMENT SCHEDULE		
PAD THICKNESS	TOP REINFORCEMENT	BOTTOM REINFORCEMENT
T = 4"	WWR 4x4-W2.9xW2.9 OR #3@12" EACH WAY	NONE
4" < T <= 6"	WWR 4x4-W4xW4 OR #4@18" EACH WAY	NONE
6" < T <= 8"	WWR 4x4-W6xW6 OR #4@12" EACH WAY	NONE
8" < T <= 12"	#4@18" EACH WAY	#4@18" EACH WAY
12" < T <= 16"	#4@12" EACH WAY	#4@12" EACH WAY

NOTES:
1. REFER TO ARCHITECTURAL, STRUCTURAL, OR MEP DRAWINGS FOR HOUSEKEEPING PAD PLAN DIMENSIONS AND THICKNESS (4" MINIMUM THICKNESS).
2. CONTRACTOR SHALL COORDINATE DIMENSIONS AND OTHER SPECIAL REQUIREMENTS WITH EQUIPMENT MANUFACTURERS AND PROVIDE WHERE REQUIRED WHETHER SHOWN ON STRUCTURAL DRAWINGS OR NOT.

© COPYRIGHT WALTER P. MOORE AND ASSOCIATES, INC.

TYPICAL HOUSEKEEPING PAD OVER STRUCTURAL SLAB (2)

NO SCALE

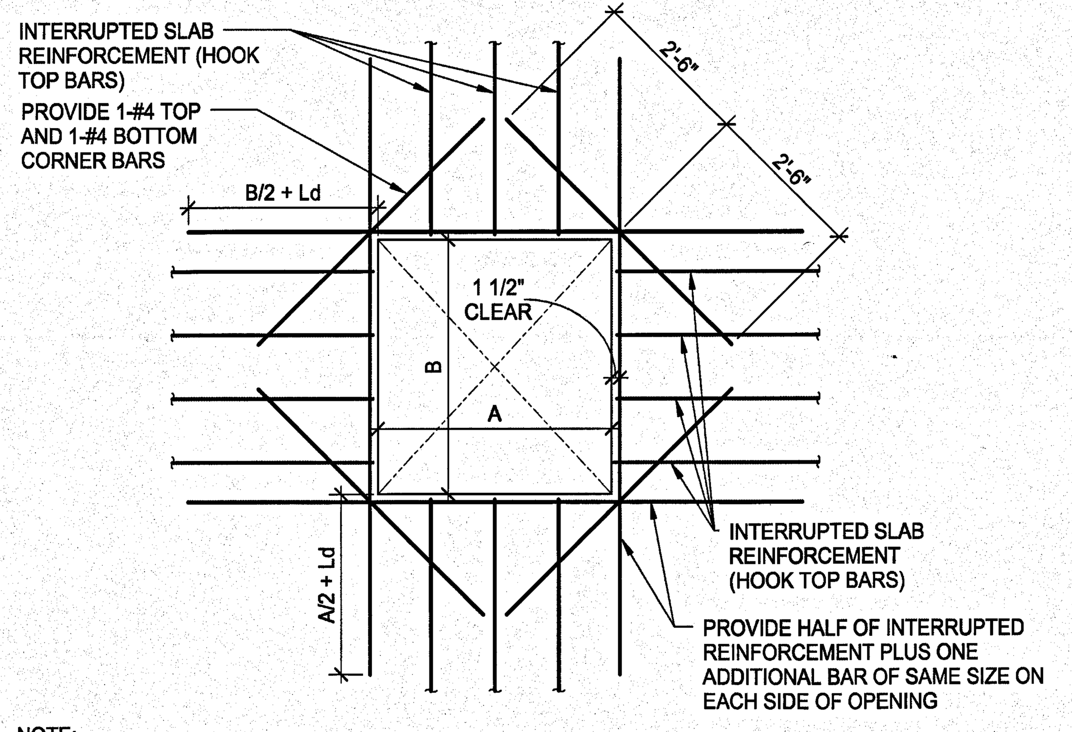

NOTE:
THIS DETAIL APPLIES TO A MAXIMUM OPENING SIZE OF 6'-0" PERPENDICULAR TO FLEXURAL REINFORCEMENT AND 10'-0" PERPENDICULAR TO TEMPERATURE REINFORCEMENT. FOR TWO-WAY SLABS, THIS DETAIL APPLIES TO A MAXIMUM OPENING SIZE OF 6'-0" x 6'-0".

© COPYRIGHT WALTER P. MOORE AND ASSOCIATES, INC.

TYPICAL OPENING IN CONCRETE SLAB (3)

NO SCALE

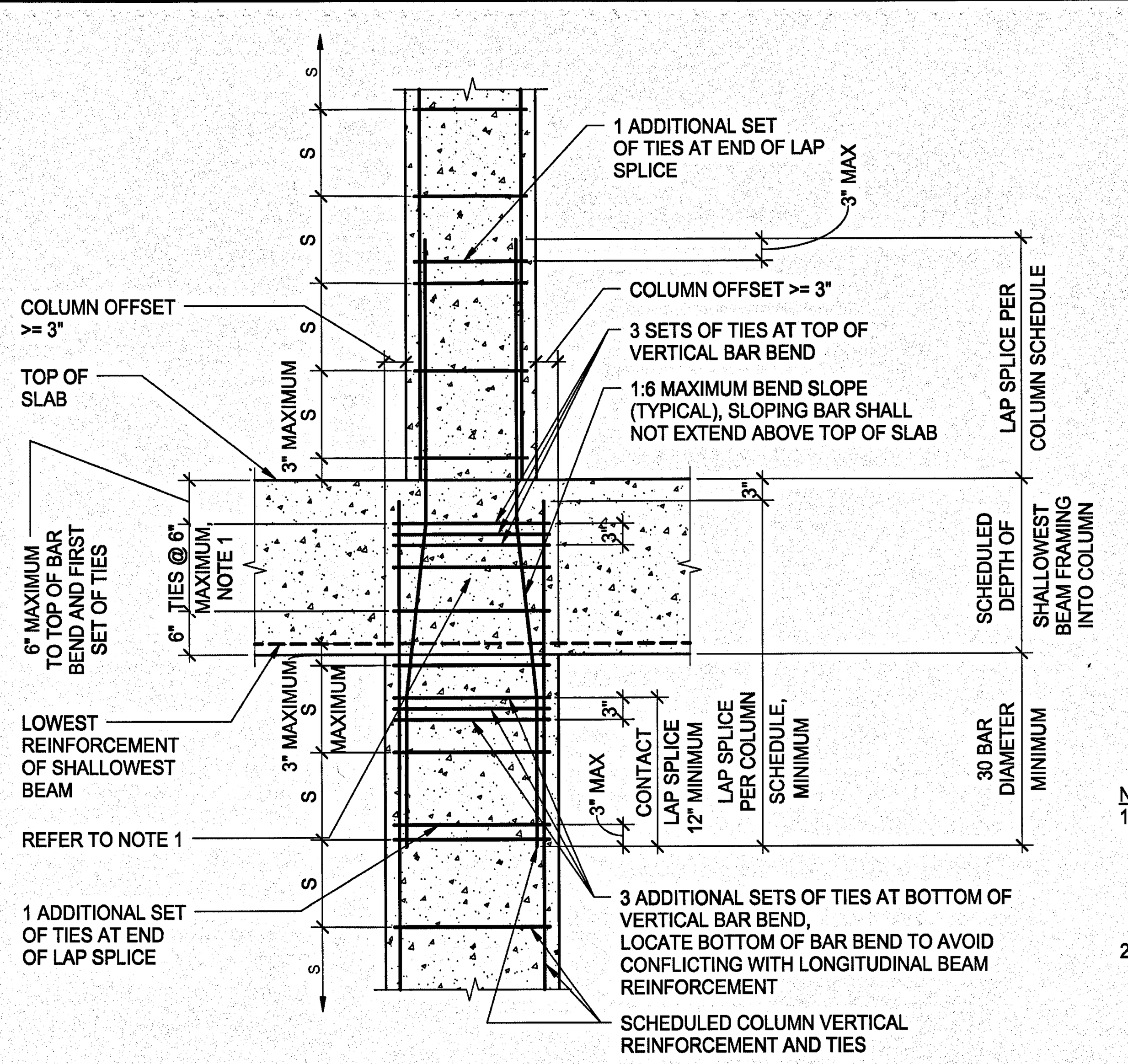

NOTES:
1. PROVIDE COLUMN TIES AT TOP OF VERTICAL BAR BEND AND AT 6" MAXIMUM WITHIN THE FLOOR CONSTRUCTION AT ALL COLUMNS AS SHOWN. THE TIES WITHIN THE FLOOR CONSTRUCTION MAY BE OMITTED WITHIN THE DEPTH OF THE SHALLOWEST MEMBER FRAMING INTO THE JOINT ONLY AT INTERIOR COLUMNS WHERE BEAMS HAVING A WIDTH NO LESS THAN 1/2 OF THE COLUMN WIDTH FRAME INTO ALL FOUR SIDES OF THE COLUMN AND WHERE NO MORE THAN 12" OF COLUMN WIDTH REMAINS UNCOVERED ON EITHER SIDE OF ANY OF THE BEAMS.
2. "S" DENOTES SCHEDULED TIE SPACING.
3. TERMINATE DISCONTINUED COLUMN VERTICAL REINFORCING BAR ITS SCHEDULED SPLICE LENGTH ABOVE THE FLOOR. DO NOT DISCONTINUE A CORNER BAR.

© COPYRIGHT WALTER P. MOORE AND ASSOCIATES, INC.

TYPICAL COLUMN SPLICE AT FLOOR LINE BEAM AND SLAB CONSTRUCTION COLUMN OFFSETS >= 3" (TWO SIDES) (4)

NO SCALE

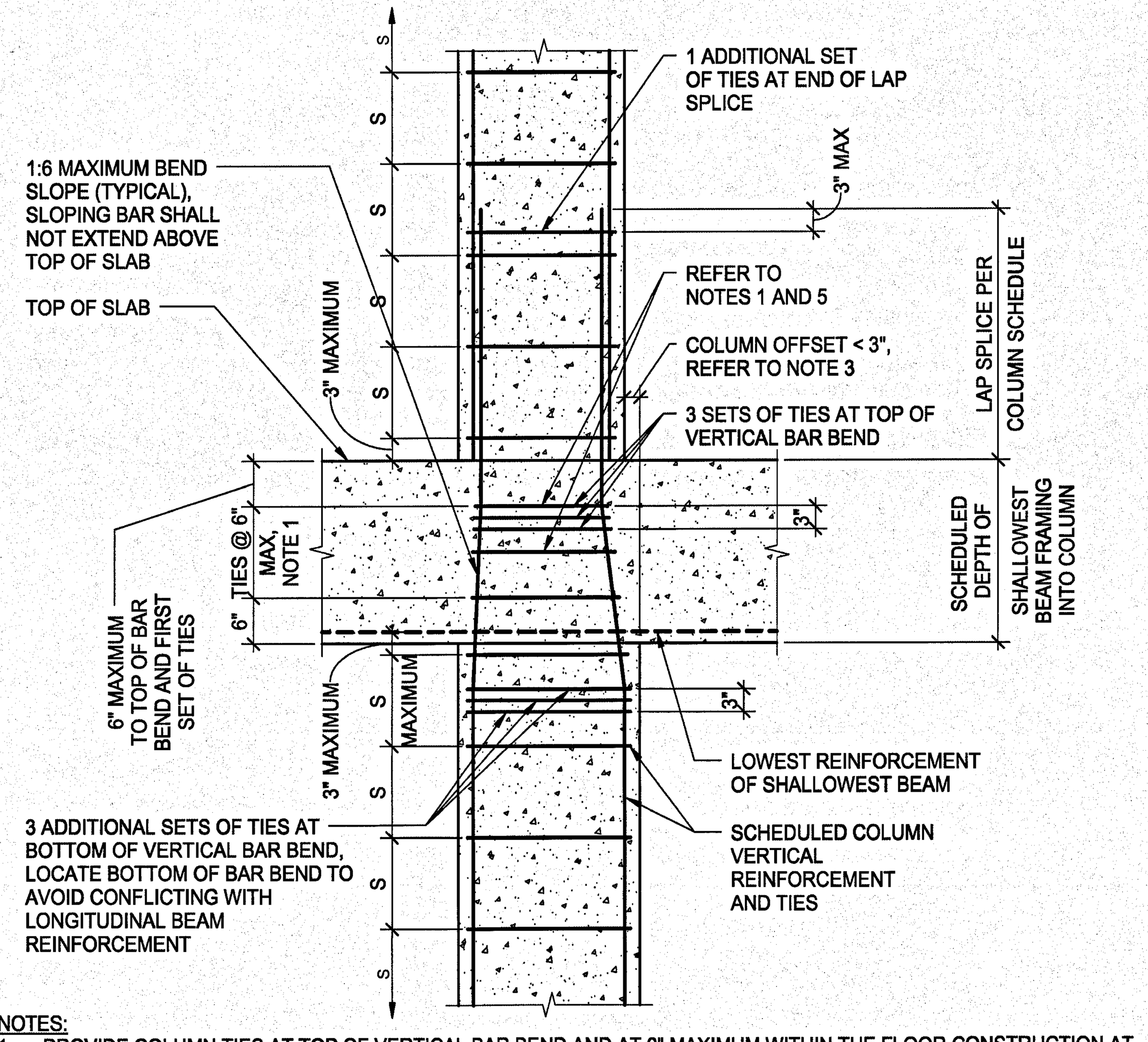

NOTES:
1. PROVIDE COLUMN TIES AT TOP OF VERTICAL BAR BEND AND AT 6" MAXIMUM WITHIN THE FLOOR CONSTRUCTION AT ALL COLUMNS AS SHOWN. THE TIES WITHIN THE FLOOR CONSTRUCTION MAY BE OMITTED WITHIN THE DEPTH OF THE SHALLOWEST MEMBER FRAMING INTO THE JOINT ONLY AT INTERIOR COLUMNS WHERE BEAMS HAVING A WIDTH NO LESS THAN 3/4 OF THE COLUMN WIDTH FRAME INTO ALL FOUR SIDES OF THE COLUMN AND WHERE NO MORE THAN 4" OF COLUMN WIDTH REMAINS UNCOVERED ON EITHER SIDE OF ANY OF THE BEAMS.
2. "S" DENOTES SCHEDULED TIE SPACING.
3. THIS TYPICAL DETAIL IS APPLICABLE FOR COLUMNS WITH OR WITHOUT OFFSETS FROM 0" TO LESS THAN 3" ON ANY FACE FROM COLUMN ABOVE THE FLOOR.
4. TERMINATE DISCONTINUED COLUMN VERTICAL REINFORCING BAR ITS SCHEDULED SPLICE LENGTH ABOVE THE FLOOR. DO NOT DISCONTINUE A CORNER BAR.
5. AT LOCATIONS WITHIN SLOPED PORTION OF VERTICAL BARS:
   A. FOR RECTANGULAR TIES, SUBSTITUTE EACH ONE-PIECE PERIMETER TIE WITH TWO-PIECE TIES.
   B. PROVIDE CROSS-TIES OF VARYING LENGTHS AS REQUIRED OR PROVIDE TWO-PIECE CROSS-TIES.
   C. LAP SPLICE TWO-PIECE TIES 15" FOR #3 TIES, 20" FOR #4 TIES, AND 24" FOR #5 TIES.

© COPYRIGHT WALTER P. MOORE AND ASSOCIATES, INC.

TYPICAL COLUMN SPLICE AT FLOOR LINE BEAM AND SLAB CONSTRUCTION COLUMN OFFSETS < 3" (5)

NO SCALE

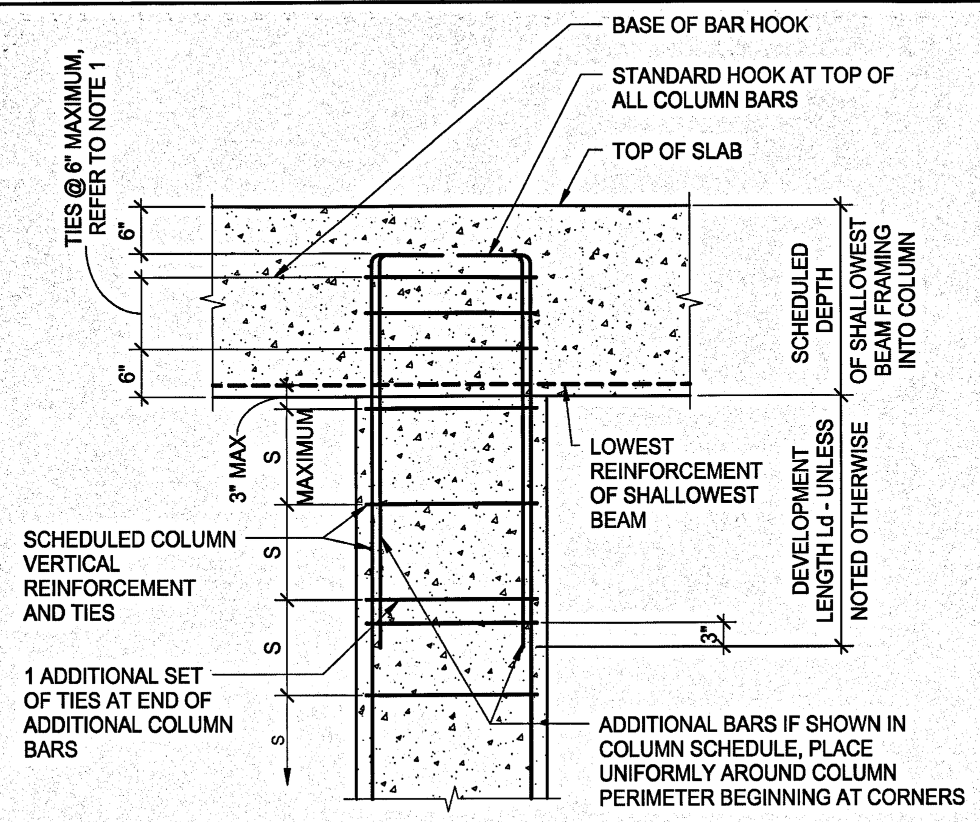

NOTES:
1. PROVIDE COLUMN TIES AT 6" MAXIMUM WITHIN THE FLOOR CONSTRUCTION AT ALL COLUMNS AS SHOWN. THE TIES WITHIN THE FLOOR CONSTRUCTION MAY BE OMITTED WITHIN THE DEPTH OF THE SHALLOWEST MEMBER FRAMING INTO THE JOINT ONLY AT INTERIOR COLUMNS WHERE BEAMS HAVING A WIDTH NO LESS THAN 1/2 OF THE COLUMN WIDTH FRAME INTO ALL FOUR SIDES OF THE COLUMN AND WHERE NO MORE THAN 12" OF COLUMN WIDTH REMAINS UNCOVERED ON EITHER SIDE OF ANY OF THE BEAMS.
2. "S" DENOTES SCHEDULED TIE SPACING.

© COPYRIGHT WALTER P. MOORE AND ASSOCIATES, INC.

TYPICAL COLUMN TERMINATION BEAM AND SLAB CONSTRUCTION (6)

NO SCALE

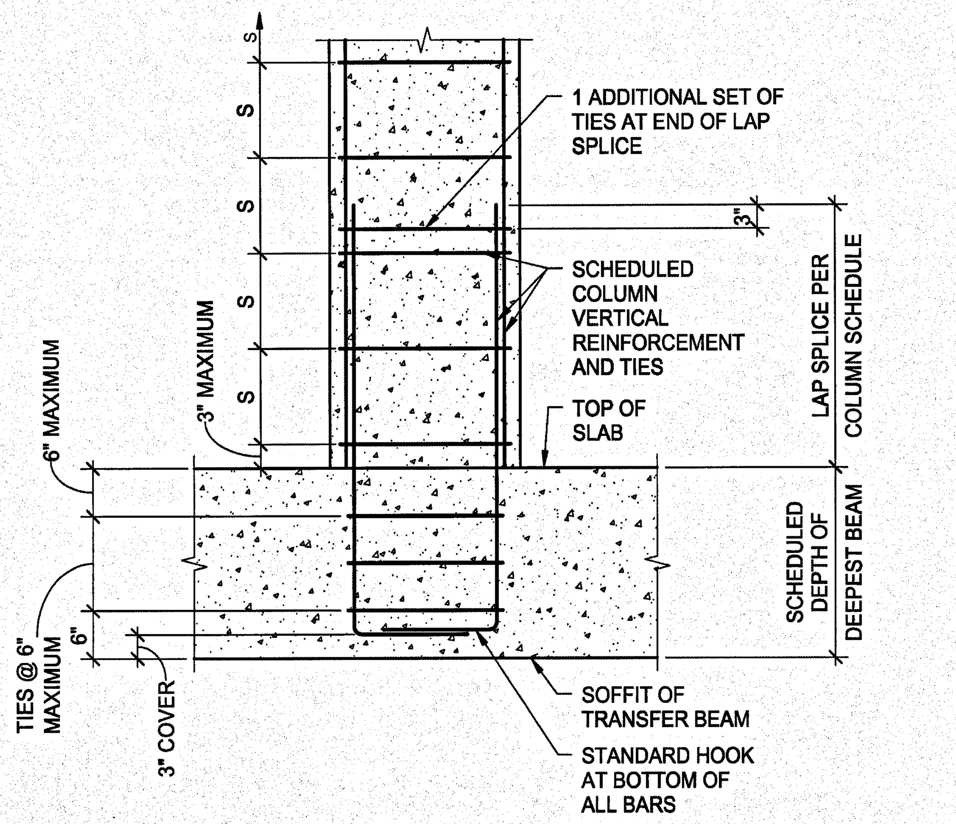

NOTES:
1. PROVIDE COLUMN TIES AT 6" MAXIMUM WITHIN THE FLOOR CONSTRUCTION AT ALL COLUMNS AS SHOWN. THE TIES WITHIN THE FLOOR CONSTRUCTION MAY BE OMITTED WITHIN THE DEPTH OF THE SHALLOWEST MEMBER FRAMING INTO THE JOINT ONLY AT INTERIOR COLUMNS WHERE BEAMS HAVING A WIDTH NO LESS THAN 1/2 OF THE COLUMN WIDTH FRAME INTO ALL FOUR SIDES OF THE COLUMN AND WHERE NO MORE THAN 12" OF COLUMN WIDTH REMAINS UNCOVERED ON EITHER SIDE OF ANY OF THE BEAMS.
2. "S" DENOTES SCHEDULED TIE SPACING.

© COPYRIGHT WALTER P. MOORE AND ASSOCIATES, INC.

TYPICAL COLUMN SPLICE AT TRANSFER BEAM (7)

NO SCALE

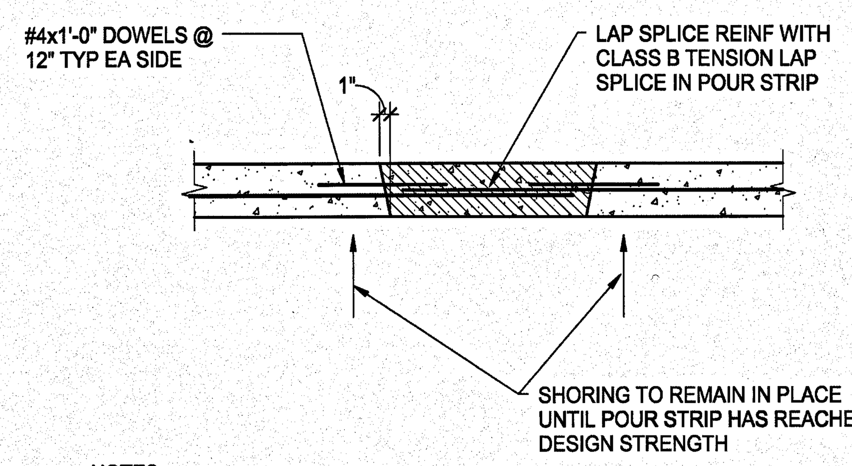

NOTES:
1. REFERENCE GENERAL NOTES FOR POUR STRIP DURATIONS.
2. IN AREAS WHERE THE CONCRETE SURFACES ARE TO BE LEFT EXPOSED, THE CONCRETE SURFACES SHALL BE RUBBED WITH A SMOOTH RUBBED FINISH TO VISUALLY BLEND TOGETHER THE SURFACES CAST AT THREE DIFFERENT TIMES.

DETAIL (8)

1" = 1'-0"

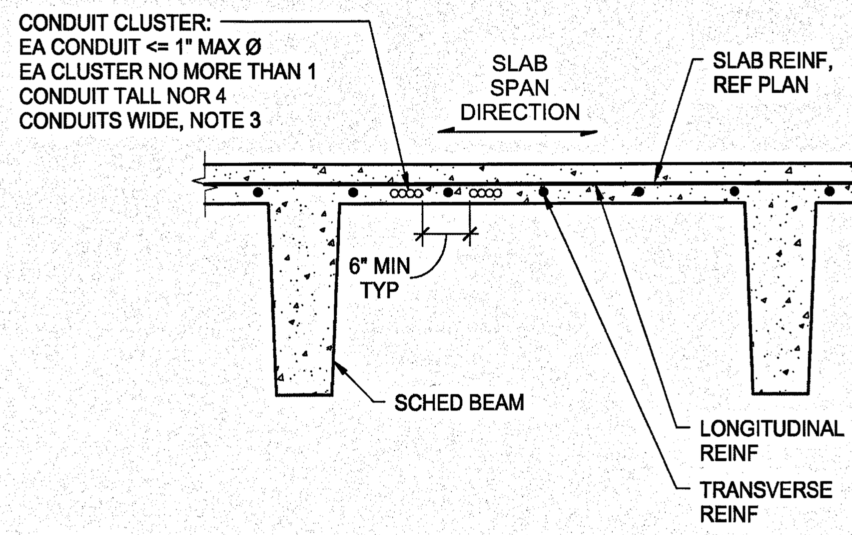

NOTES:
1. DO NOT CUT OR DISPLACE REINFORCING STEEL.
2. DO NOT PLACE CONDUIT ADJACENT TO NOR TIE CONDUIT TO PARALLEL REINFORCING BARS.
3. PLACE CONDUITS BELOW LONGITUDINAL REINFORCEMENT IF CONDUITS ARE ORIENTED IN THE SLAB SPAN DIRECTION, PLACE THEM ABOVE TRANSVERSE REINFORCEMENT.
4. BEAM OR JOIST REINFORCEMENT NOT SHOWN FOR CLARITY.

CONDUIT CLUSTERS EMBEDDED IN STRUCTURAL SLABS (9)

3/4" = 1'-0"

SYM	ZONE		DATE	APPROVED

REVISIONS

WALTER P MOORE
WALTER P. MOORE AND ASSOCIATES, INC.
300 SOUTH ORANGE AVENUE, SUITE 1150
ORLANDO, FLORIDA 32801.3332
PHONE: 407.418.2218 FAX: 407.418.2257
CERTIFICATE OF AUTHORIZATION NO. 3818
S07-11023-00
JAIME E. VASQUEZ P.E. NO. 49103
TO THE BEST OF THE ENGINEER'S KNOWLEDGE, THE PLANS AND SPECIFICATIONS COMPLY WITH THE APPLICABLE MINIMUM BUILDING CODES

SIGNATURES	DATE
DRAWN ANDREW MYERS	12.18.13
CHECKED JAIME E. VASQUEZ	12.18.13
SUBMITTED: ARCH/ENG OF RECORD JAIME E. VASQUEZ	12-18-13
ST of LICENSURE: FL LICENSE NO: 49103	
APPROVED JOSEPH M. ALES	12-18-13
BRUCE KINNAIRD	12/18/13

NATIONAL AERONAUTICS AND SPACE ADMINISTRATION
JOHN F. KENNEDY SPACE CENTER, NASA
KENNEDY SPACE CENTER, FLORIDA

KSC CENTRAL CAMPUS
REPLACEMENT HEADQUARTERS BUILDING
PHASE 1
VOL. 1 OF 4

TYPICAL DETAILS

S422

FILE NO.	SIZE	DWG. NO.
C-12070.00	F	79K39622 VOL 1

PCN. NO. 98745.1a

NOTICE: When Government drawings, specifications, or other data are used for any purpose other than in connection with a definitely related Government procurement operation, the United States Government thereby incurs no responsibility nor obligation whatsoever; and the fact that the Government may have formulated, furnished, or in any way supplied the said drawings, specifications or other data is not to be regarded by implication or otherwise as in any manner licensing the holder or any other person or corporation, or conveying any rights or permission to manufacture, use, or sell any patented invention that may in any way be related thereto.

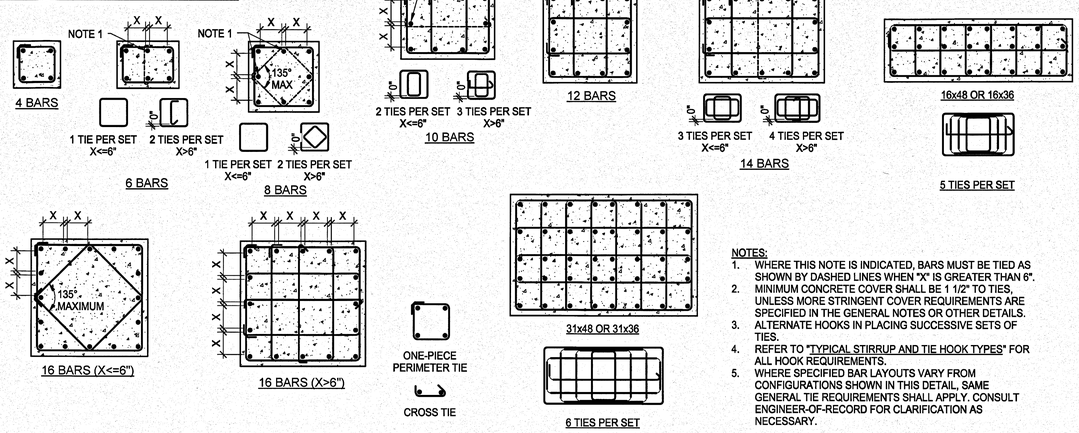

NOTES:
1. WHERE THIS NOTE IS INDICATED, BARS MUST BE TIED AS SHOWN BY DASHED LINES WHEN "X" IS GREATER THAN 6".
2. MINIMUM CONCRETE COVER SHALL BE 1 1/2" TO TIES, UNLESS MORE STRINGENT COVER REQUIREMENTS ARE SPECIFIED IN THE GENERAL NOTES OR OTHER DETAILS.
3. ALTERNATE HOOKS IN PLACING SUCCESSIVE SETS OF TIES.
4. REFER TO "TYPICAL STIRRUP AND TIE HOOK TYPES" FOR ALL HOOK REQUIREMENTS.
5. WHERE SPECIFIED BAR LAYOUTS VARY FROM CONFIGURATIONS SHOWN IN THIS DETAIL, SAME GENERAL TIE REQUIREMENTS SHALL APPLY. CONSULT ENGINEER-OF-RECORD FOR CLARIFICATION AS NECESSARY.

TYPICAL COLUMN TIE REQUIREMENTS FOR PREASSEMBLED CAGES SQUARE OR RECTANGULAR COLUMNS (1)

NO SCALE

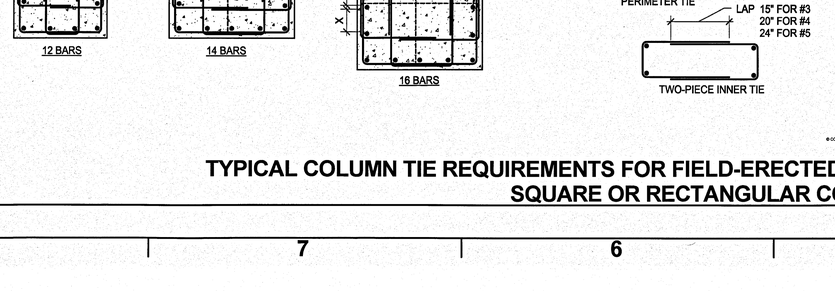

NOTES:
1. WHERE THIS NOTE IS INDICATED, BARS MUST BE TIED AS SHOWN BY DASHED LINES WHEN "X" IS GREATER THAN 6".
2. MINIMUM CONCRETE COVER SHALL BE 1 1/2" TO TIES, UNLESS MORE STRINGENT REQUIREMENTS ARE SPECIFIED IN THE GENERAL NOTES OR OTHER DETAILS.
3. ALTERNATE HOOKS IN PLACING SUCCESSIVE SETS OF TIES.
4. REFER TO "TYPICAL STIRRUP AND TIE HOOK TYPES" FOR ALL HOOK REQUIREMENTS.
5. WHERE SPECIFIED BAR LAYOUTS VARY FROM CONFIGURATIONS SHOWN IN THIS DETAIL, SAME GENERAL TIE REQUIREMENTS SHALL APPLY. CONSULT ENGINEER-OF-RECORD FOR CLARIFICATION AS NECESSARY.

TYPICAL COLUMN TIE REQUIREMENTS FOR PREASSEMBLED CAGES SQUARE OR RECTANGULAR COLUMNS - VERTICAL BARS IN TWO FACES ONLY (2)

NO SCALE

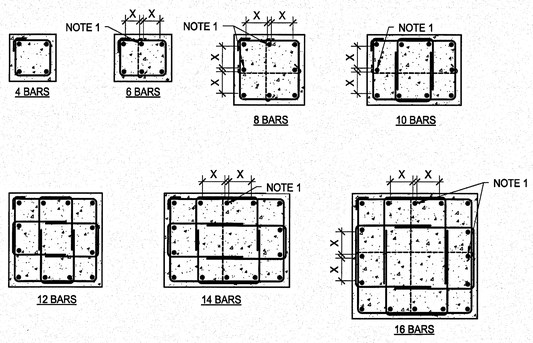

NOTES:
1. WHERE THIS NOTE IS INDICATED, BARS MUST BE TIED AS SHOWN BY DASHED LINES WHEN "X" IS GREATER THAN 6".
2. MINIMUM CONCRETE COVER SHALL BE 1 1/2" TO TIES, UNLESS MORE STRINGENT COVER REQUIREMENTS ARE SPECIFIED IN THE GENERAL NOTES OR OTHER DETAILS.
3. ALTERNATE HOOKS IN PLACING SUCCESSIVE SETS OF TIES.
4. REFER TO "TYPICAL STIRRUP AND TIE HOOK TYPES" FOR ALL HOOK REQUIREMENTS.
5. ALL COLUMNS SHALL HAVE (1) ONE-PIECE PERIMETER TIE. ALL OTHER TIES SHALL BE TWO-PIECE TIES OR CROSS TIES.
6. TWO-PIECE TIES MUST BE SECURELY TIED TO COLUMN VERTICAL BARS AND TO EACH OTHER TO PREVENT DISPLACEMENT DURING CONCRETE PLACEMENT.
7. WHERE SPECIFIED BAR LAYOUTS VARY FROM CONFIGURATIONS SHOWN IN THIS DETAIL, SAME GENERAL TIE REQUIREMENTS SHALL APPLY. CONSULT ENGINEER-OF-RECORD FOR CLARIFICATION AS NECESSARY.

TYPICAL COLUMN TIE REQUIREMENTS FOR FIELD-ERECTED CAGES SQUARE OR RECTANGULAR COLUMNS (3)

NO SCALE

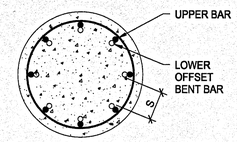

NOTES:
1. LOWER COLUMN VERTICAL BARS SHALL BE OFFSET BENT RADIALLY IN THE SHOP TOWARD THE INTERIOR OF THE COLUMN AS SHOWN.
2. "S" IS THE CLEAR BAR SPACING TO BE USED FOR DETERMINATION OF TENSION SPLICE LENGTH CATEGORY.
3. WHEN CLEAR BAR SPACING IS NOT THE SAME AT DIFFERENT COLUMN FACES, SMALLER SPACING SHALL BE USED TO DETERMINE THE APPLICABLE SPLICE CATEGORY.
4. REFER TO "TYPICAL CLEAR SPACING CRITERIA OF LAP SPLICED BARS, STAGGERED SPLICES" FOR CRITERIA TO DETERMINE CLEAR SPACING FOR BARS AT STAGGERED SPLICES.

TYPICAL NORMAL LAP SPLICE CIRCULAR COLUMNS (5)

NO SCALE

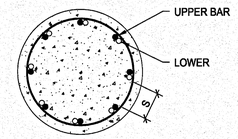

NOTES:
1. LOWER COLUMN VERTICAL BARS SHALL NOT BE OFFSET BENT. UPPER STRAIGHT BARS SHALL HAVE TANGENTIAL LAP WITH LOWER BARS.
2. "S" IS THE CLEAR BAR SPACING TO BE USED FOR DETERMINATION OF TENSION SPLICE LENGTH CATEGORY.
3. WHEN CLEAR BAR SPACING IS NOT THE SAME AT DIFFERENT COLUMN FACES, SMALLER SPACING SHALL BE USED TO DETERMINE THE APPLICABLE SPLICE CATEGORY.
4. REFER TO "TYPICAL CLEAR SPACING CRITERIA OF LAP SPLICED BARS, STAGGERED SPLICES" FOR CRITERIA TO DETERMINE CLEAR SPACING FOR BARS AT STAGGERED SPLICES.

TYPICAL TANGENTIAL LAP SPLICE CIRCULAR COLUMNS (8)

NO SCALE

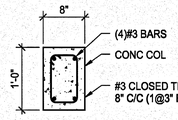

NOTES:
1. COLUMN SHALL BE CAST SPEARATELY FROM SHEARWALLS.
2. PROVIDE COMPRESSIBLE FILLER MATERIAL BETWEEN COLUMN AND SHEAR WALL.
3. COLUMN MIX SHALL HAVE PEA-ROCK COARSE AGGREGATE.

8"x12" CONCRETE COLUMN BETWEEN DOORS (9)

NO SCALE

NOTES:
1. ENDS OF CIRCULAR TIES SHALL TERMINATE WITH STANDARD HOOKS THAT ENGAGE A LONGITUDINAL COLUMN BAR AT CONTRACTOR'S OPTION, ONE ADDITIONAL #4 LONGITUDINAL BAR MAY BE ADDED AT EACH SPLICE LOCATION TO ANCHOR ONE OF THE HOOKS. THIS IS TO SIMPLIFY TIE FABRICATION WHEN THE NUMBER AND SPACING OF LONGITUDINAL COLUMN BARS VARIES THROUGHOUT THE PROJECT.
2. REFER TO TYPICAL DETAIL FOR TIE HOOK DIMENSIONS.

TYPICAL COLUMN TIE REQUIREMENTS CIRCULAR COLUMNS (6)

NO SCALE

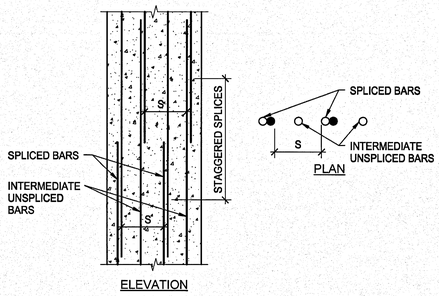

NOTES:
1. "S" = CLEAR BAR SPACING TO BE USED FOR DETERMINATION OF TENSION SPLICE LENGTH CATEGORY

TYPICAL CLEAR SPACING CRITERIA OF LAP SPLICED BARS, STAGGERED SPLICES (7)

NO SCALE

SYM	ZONE	REVISIONS	DATE	APPROVED

WALTER P MOORE
WALTER P. MOORE AND ASSOCIATES, INC.
500 SOUTH ORANGE AVENUE, SUITE 1100
ORLANDO, FLORIDA 32801-3332
PHONE: 407.418.2218 FAX: 407.418.2267
CERTIFICATE OF AUTHORIZATION NO. 3018
057-11205-00
JAIME E. VASQUEZ P.E. NO. 49103
TO THE BEST OF THE ENGINEER'S KNOWLEDGE, THE PLANS AND SPECIFICATIONS COMPLY WITH THE APPLICABLE MINIMUM BUILDING CODES

SIGNATURES	DATE
DRAWN ANDREW MYERS	12.18.13
CHECKED JAIME E. VASQUEZ	12.18.13
SUBMITTED: ARCH/ENG OF RECORD JAIME E. VASQUEZ	12.18.13
ST of LICENSURE: FL LICENSE NO: 49103	
APPROVED JOSEPH M. ALES	12.18.13
BRUCE KINNAIRD	12/18/13

NATIONAL AERONAUTICS AND SPACE ADMINISTRATION
JOHN F. KENNEDY SPACE CENTER, NASA
KENNEDY SPACE CENTER, FLORIDA

KSC CENTRAL CAMPUS
REPLACEMENT HEADQUARTERS BUILDING
PHASE 1
VOL. 1 OF 4

TYPICAL DETAILS

S423

FILE NO.	SIZE	DWG. NO.
C-12070.00	F	79K39622 VOL 1
PCN. NO. 98745.1a		SHEET 154

NOTICE: When Government drawings, specifications, or other data are used for any purpose other than in connection with a definitely related Government procurement operation, the United States Government thereby incurs no responsibility nor obligation whatsoever; and the fact that the Government may have formulated, furnished, or in any way supplied the said drawings, specifications or other data is not to be regarded by implication or otherwise as in any manner licensing the holder or any other person or corporation, or conveying any rights or permission to manufacture, use, or sell any patented invention that may in any way be related thereto.

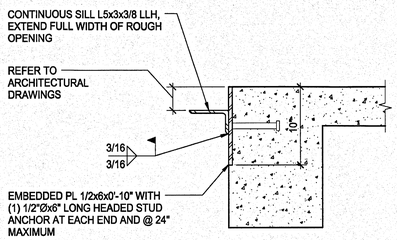

NOTES:
1. PROVIDE CONTINUOUS ELEVATOR SILL ANGLE AT THRESHOLD OF ELEVATOR OPENINGS IF REQUIRED BY ELEVATOR MANUFACTURER. REFER TO ARCHITECTURAL DRAWINGS FOR LOCATIONS.

03300-FL-ES-VEL-01A
© COPYRIGHT WALTER P. MOORE AND ASSOCIATES, INC. 2012

TYPICAL ELEVATOR SILL ANGLE CONNECTION TO CONCRETE BEAM (1)
NO SCALE

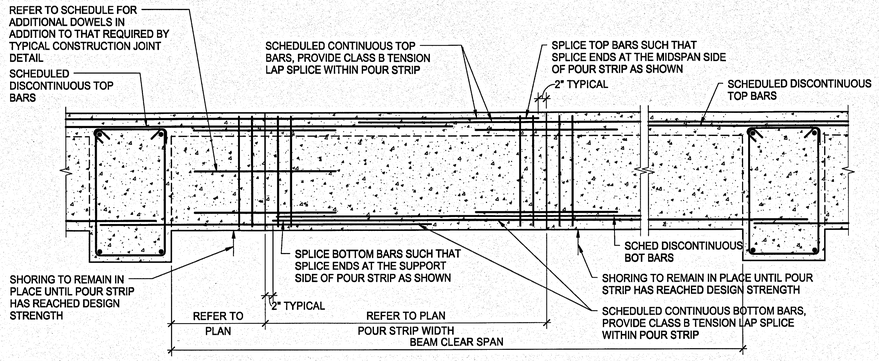

NOTES:
1. REFERENCE GENERAL NOTES FOR POUR STRIP DURATION.
2. IN AREAS WHERE CONCRETE SURFACES ARE TO BE LEFT EXPOSED, THE CONCRETE SURFACES SHALL BE RUBBED WITH A SMOOTH RUBBED FINISH TO VISUALLY BLEND TOGETHER THE SURFACES CAST AT THREE DIFFERENT TIMES.
3. EXTEND SLAB REINFORCEMENT THROUGH CONSTRUCTION JOINT EACH SIDE OF POUR STRIP. REFER TO "TYPICAL CONSTRUCTION JOINT IN CONCRETE STRUCTURAL SLAB" FOR ADDITIONAL SLAB REINFORCEMENT AT EACH SIDE OF POUR STRIP.
4. ALL BARS SHALL BE TERMINATED WITHIN THE POUR STRIP. NO BAR SHALL CROSS THE POUR STRIP WITHOUT BEING SPLICED.

TYPICAL POUR STRIP THROUGH BEAMS (4)
NO SCALE

03310-FL-PSTRP-01
© COPYRIGHT WALTER P. MOORE AND ASSOCIATES, INC. 2012

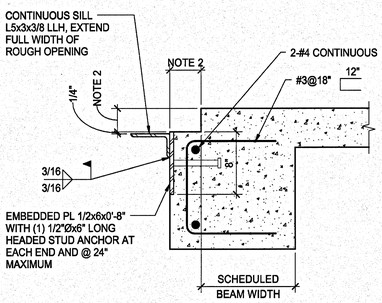

NOTES:
1. PROVIDE CONTINUOUS ELEVATOR SILL ANGLE AT THRESHOLD OF ELEVATOR OPENINGS IF REQUIRED BY ELEVATOR MANUFACTURER. REFER TO ARCHITECTURAL DRAWINGS FOR LOCATIONS.
2. VERIFY SIZE OF BLOCKOUT IN BEAM WITH ARCHITECTURAL AND ELEVATOR MANUFACTURER'S DRAWINGS.

03300-FL-ELVSL-01
© COPYRIGHT WALTER P. MOORE AND ASSOCIATES, INC. 2012

TYPICAL ELEVATOR SILL ANGLE CONNECTION TO CONCRETE BEAM (2)
NO SCALE

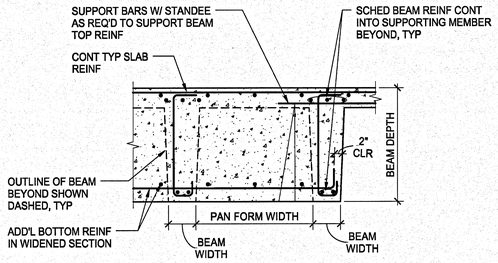

SECTION A-A

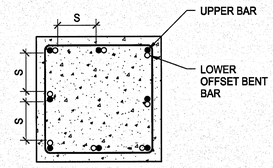

NOTES:
1. LOWER COLUMN VERTICAL BARS SHALL BE OFFSET BENT IN THE SHOP TOWARD THE INTERIOR OF THE COLUMN AS SHOWN.
2. "S" IS THE CLEAR BAR SPACING TO BE USED FOR DETERMINATION OF TENSION SPLICE LENGTH CATEGORY.
3. WHEN CLEAR BAR SPACING IS NOT THE SAME AT DIFFERENT COLUMN FACES, SMALLER SPACING SHALL BE USED TO DETERMINE THE APPLICABLE SPLICE CATEGORY.
4. REFER TO "TYPICAL CLEAR SPACING CRITERIA OF LAP SPLICED BARS, STAGGERED SPLICES" FOR CRITERIA TO DETERMINE CLEAR SPACING FOR BARS AT STAGGERED SPLICES.

03306-DL-CLSP-48
© COPYRIGHT WALTER P. MOORE AND ASSOCIATES, INC. 2009

TYPICAL TANGENTIAL LAP SPLICE SQUARE OR RECTANGULAR COLUMNS (6)
NO SCALE

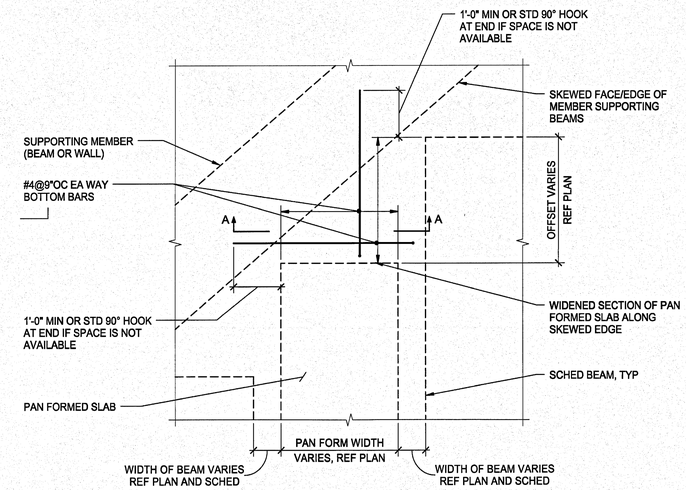

PLAN

REINFORCING IN WIDENED SECTION AT END OF SKEWED PAN FORM (5)
3/4" = 1'-0"

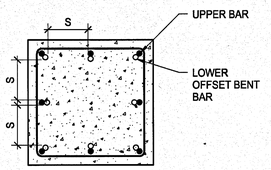

NOTES:
1. LOWER COLUMN VERTICAL BARS SHALL BE OFFSET BENT IN THE SHOP TOWARD THE INTERIOR OF THE COLUMN AS SHOWN.
2. "S" IS THE CLEAR BAR SPACING TO BE USED FOR DETERMINATION OF TENSION SPLICE LENGTH CATEGORY.
3. WHEN CLEAR BAR SPACING IS NOT THE SAME AT DIFFERENT COLUMN FACES, SMALLER SPACING SHALL BE USED TO DETERMINE THE APPLICABLE SPLICE CATEGORY.
4. REFER TO "TYPICAL CLEAR SPACING CRITERIA OF LAP SPLICED BARS, STAGGERED SPLICES" FOR CRITERIA TO DETERMINE CLEAR SPACING FOR BARS AT STAGGERED SPLICES.

03306-DL-CLCOL-04
© COPYRIGHT WALTER P. MOORE AND ASSOCIATES, INC. 2009

TYPICAL NORMAL LAP SPLICE SQUARE OR RECTANGULAR COLUMNS (7)
NO SCALE

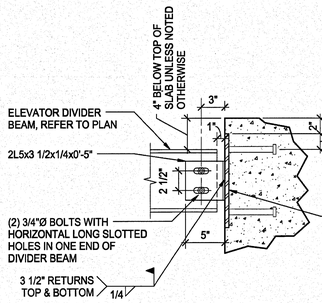

03300-FL-ELVBM-01
© COPYRIGHT WALTER P. MOORE AND ASSOCIATES, INC. 2012

TYPICAL ELEVATOR DIVIDER BEAM CONNECTION TO CONCRETE BEAM OR WALL (3)
NO SCALE

SYM	ZONE		DATE	APPROVED

REVISIONS

WALTER P MOORE
WALTER P. MOORE AND ASSOCIATES, INC.
900 SOUTH ORANGE AVENUE, SUITE 1100
ORLANDO, FLORIDA 32801.8852
PHONE: 407.418.2218 FAX: 407.418.2257
CERTIFICATE OF AUTHORIZATION NO. 3818
SO7-11009-00
JAIME E. VASQUEZ P.E. NO. 49103
TO THE BEST OF THE ENGINEER'S KNOWLEDGE, THE PLANS AND SPECIFICATIONS COMPLY WITH THE APPLICABLE MINIMUM BUILDING CODES

SIGNATURES	DATE
DRAWN ANDREW MYERS	12.18.13
CHECKED JAIME E. VASQUEZ	12.18.13
SUBMITTED, ARCHIVED RECORD JAIME E. VASQUEZ	12.18.13
ST of LICENSURE: FL LICENSE NO: 49103	
APPROVED JOSEPH M. ALES	12-18-13
BRUCE KINNAIRD	12/18/13

NATIONAL AERONAUTICS AND SPACE ADMINISTRATION
JOHN F. KENNEDY SPACE CENTER, NASA
KENNEDY SPACE CENTER, FLORIDA

KSC CENTRAL CAMPUS
REPLACEMENT HEADQUARTERS BUILDING
PHASE 1
VOL. 1 OF 4

TYPICAL DETAILS

S424

FILE NO.	SIZE	DWG. NO.
C-12070.00	F	79K39622 VOL 1
PCN. NO. 98745.1a		SHEET 155

KSC FORM 1-11 (3/76)(C/G 3/94)

NOTICE: When Government drawings, specifications, or other data are used for any purpose other than in connection with a definitely related Government procurement operation, the United States Government thereby incurs no responsibility nor obligation whatsoever; and the fact that the Government may have formulated, furnished, or in any way supplied the said drawings, specifications or other data is not to be regarded by implication or otherwise as in any manner licensing the holder or any other person or corporation, or conveying any rights or permission to manufacture, use, or sell any patented invention that may in any way be related thereto.

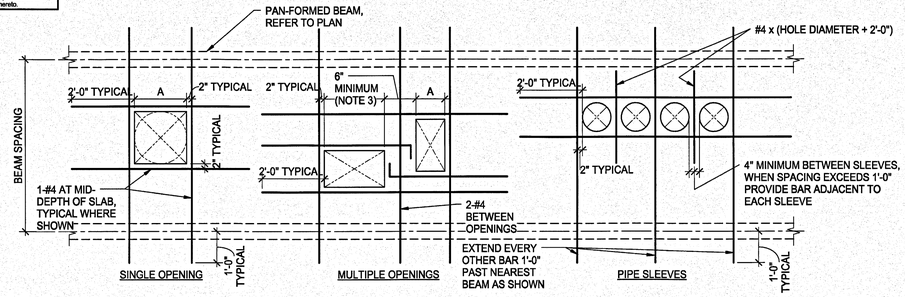

NOTES:
1. COORDINATE OPENING SIZES AND LOCATIONS WITH ARCHITECTURAL AND MECHANICAL DRAWINGS.
2. "A" IS THE OPENING DIMENSION IN THE DIRECTION PARALLEL TO THE PAN-FORMED BEAMS. THIS DETAIL IS APPLICABLE FOR A MAXIMUM "A" DIMENSION OF 4'-0". VERIFY FRAMING WITH ENGINEER FOR OPENINGS GREATER THAN 4'-0".
3. WHEN SPACING BETWEEN MULTIPLE OPENINGS IS 2'-0" OR GREATER, REINFORCEMENT SHALL BE PLACED AS SHOWN FOR SINGLE OPENING CONDITIONS.
4. SLAB REINFORCEMENT SHALL BE CUT AROUND SLAB OPENINGS AND SHALL EXTEND TO WITHIN 2" OF OPENINGS ON ALL SIDES.
5. OPENINGS OR GROUPS OF OPENINGS 10" AND SMALLER DO NOT REQUIRE ADDITIONAL REINFORCEMENT.
6. THIS DETAIL SHOWS TYPICAL CONDITIONS. VERIFY REINFORCING STEEL PLACEMENT WITH ENGINEER FOR SPECIAL CASES.
7. PROVIDE REINFORCEMENT AS SHOWN FOR SQUARE, RECTANGULAR, OR ROUND OPENINGS.

S3300-FL-PN-ST-02
© COPYRIGHT WALTER P. MOORE AND ASSOCIATES, INC. 2011

TYPICAL OPENINGS IN CONCRETE PAN-FORMED BEAM SLAB (1)
NO SCALE

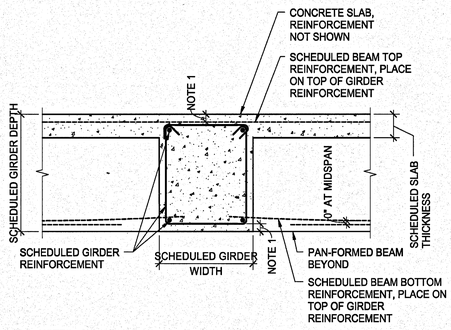

NOTES:
1. REFER TO OTHER DETAILS FOR CONCRETE CLEAR COVER REQUIREMENTS.
2. PAN-FORMED BEAM STIRRUPS HAVE BEEN OMITTED FOR CLARITY.

S3300-FL-PN-ST-11
© COPYRIGHT WALTER P. MOORE AND ASSOCIATES, INC. 2011

TYPICAL INTERIOR GIRDER AND PAN-FORMED BEAM REINFORCEMENT PLACEMENT (SAME DEPTH) (2)
NO SCALE

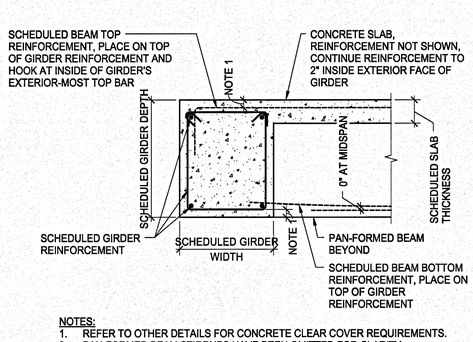

NOTES:
1. REFER TO OTHER DETAILS FOR CONCRETE CLEAR COVER REQUIREMENTS.
2. PAN-FORMED BEAM STIRRUPS HAVE BEEN OMITTED FOR CLARITY.

S3300-FL-PN-ST-12
© COPYRIGHT WALTER P. MOORE AND ASSOCIATES, INC. 2011

TYPICAL EXTERIOR GIRDER AND PAN-FORMED BEAM REINFORCEMENT PLACEMENT (SAME DEPTH) (4)
NO SCALE

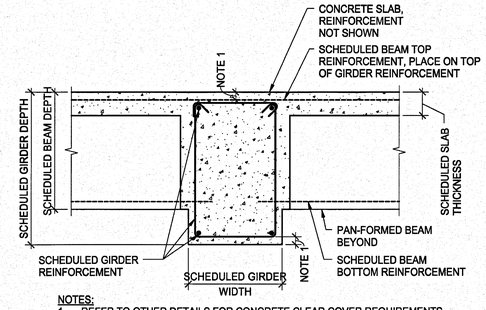

NOTES:
1. REFER TO OTHER DETAILS FOR CONCRETE CLEAR COVER REQUIREMENTS.
2. PAN-FORMED BEAM STIRRUPS HAVE BEEN OMITTED FOR CLARITY.

S3300-FL-PN-ST-13
© COPYRIGHT WALTER P. MOORE AND ASSOCIATES, INC. 2011

TYPICAL INTERIOR GIRDER AND PAN-FORMED BEAM REINFORCEMENT PLACEMENT (DEEPER GIRDER) (3)
NO SCALE

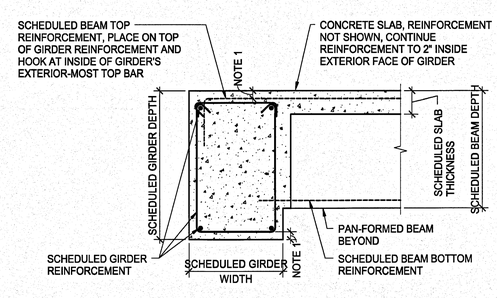

NOTES:
1. REFER TO OTHER DETAILS FOR CONCRETE CLEAR COVER REQUIREMENTS.
2. PAN-FORMED BEAM STIRRUPS HAVE BEEN OMITTED FOR CLARITY.

S3300-FL-PN-ST-14
© COPYRIGHT WALTER P. MOORE AND ASSOCIATES, INC. 2011

TYPICAL EXTERIOR GIRDER AND PAN-FORMED BEAM REINFORCEMENT PLACEMENT (DEEPER GIRDER) (5)
NO SCALE

SYM	ZONE		DATE	APPROVED
		REVISIONS		

WALTER P MOORE
WALTER P. MOORE AND ASSOCIATES, INC.
800 SOUTH ORANGE AVENUE, SUITE 1100
ORLANDO, FLORIDA 32801.2932
PHONE: 407.418.2218 FAX: 407.418.2257
CERTIFICATE OF AUTHORIZATION NO. 3818
807-11023-00
JAIME E. VASQUEZ P.E. NO. 49103
TO THE BEST OF THE ENGINEER'S KNOWLEDGE, THE PLANS AND SPECIFICATIONS COMPLY WITH THE APPLICABLE MINIMUM BUILDING CODES

SIGNATURES	DATE
DRAWN ANDREW MYERS	12.18.13
CHECKED JAIME E. VASQUEZ	12.18.13
SUBMITTED: ARCHITECT OF RECORD JAIME E. VASQUEZ	12-18-13
ST OF LICENSURE: FL LICENSE NO: 49103	
APPROVED JOSEPH M. ALES	12/18/13
BRUCE KINNAIRD	12/18/13

NATIONAL AERONAUTICS AND SPACE ADMINISTRATION
JOHN F. KENNEDY SPACE CENTER, NASA
KENNEDY SPACE CENTER, FLORIDA

KSC CENTRAL CAMPUS
REPLACEMENT HEADQUARTERS BUILDING
PHASE 1
VOL. 1 OF 4

TYPICAL DETAILS

FILE NO.	SIZE	DWG. NO.
C-12070.00	F	79K39622 VOL 1
PCN. NO. 98745.1a		SHEET 156

S425

NOTICE: When Government drawings, specifications, or other data are used for any purpose other than in connection with a definitely related Government procurement operation, the United States Government thereby incurs no responsibility nor obligation whatsoever; and the fact that the Government may have formulated, furnished, or in any way supplied the said drawings, specifications or other data is not to be regarded by implication or otherwise as in any manner licensing the holder or any other person or corporation, or conveying any rights or permission to manufacture, use, or sell any patented invention that may in any way be related thereto.

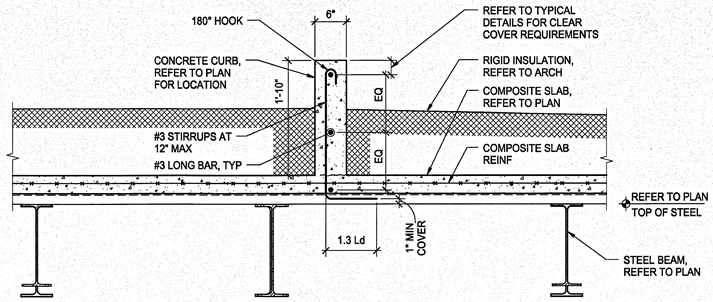

COMPOSITE ROOF CURB 4
1" = 1'-0"

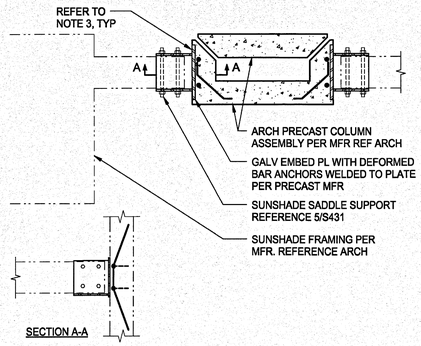

NOTE:
1. REFERENCE 5/S431 FOR BALANCE OF INFORMATION NOT SHOWN.
2. REFERENCE ARCHITECTURAL FOR LOCATION AND ELEVATION OF SADDLE.
3. EMBED PLATE NOT TO EXCEED 11"x1'-0 1/2" IN PLAN SIZE.

SUGGESTED SUNSHADE SADDLE CONNECTION TO PRECAST CLADDING 6
3/4" = 1'-0"

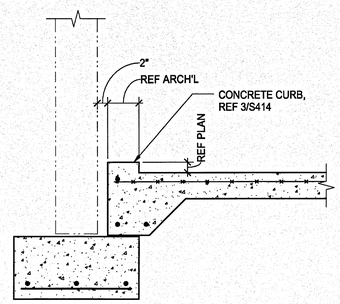

NOTES:
1. REFERENCE 7/S431 FOR BALANCE OF INFORMATION NOT SHOWN.

SLAB-ON-GRADE PERIMETER DETAIL 8
NO SCALE

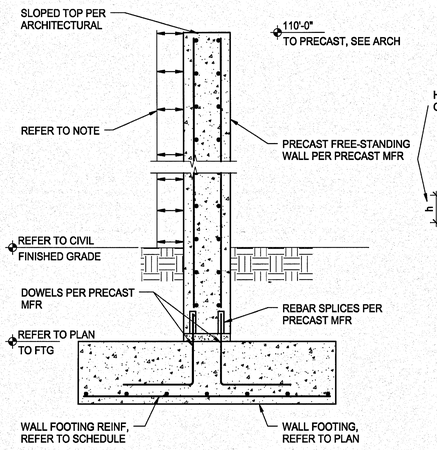

NOTE:
1. PRECAST WALL AND CONNECTIONS TO FOOTING SHALL BE DESIGNED BY THE PRECAST MANUFACTURER'S DELEGATED ENGINEER TO RESIST ULTIMATE WIND PRESSURES IN DETAIL A-A.

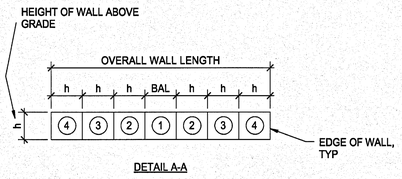

DETAIL A-A

WALL ZONE	PRESSURE (PSF)
4	±118
3	±103
2	±79
1	±60

NOTE:
1. ULTIMATE WIND PRESSURES PER ASCE 7-10. PRESSURES MAY BE REDUCED BY 15% IF ASCE 7-10 LOAD COMBINATIONS ARE USED IN DESIGN.

SERVICE YARD WALL 2
NO SCALE

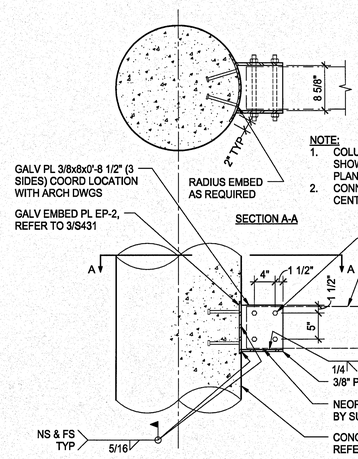

NOTE:
1. COLUMN REINFORCEMENT NOT SHOWN FOR CLARITY, REFER TO PLAN.
2. CONNECTION IS SYMM ABOUT CENTERLINE, EXCEPT AT ENDS.

SECTION A-A

SUNSHADE SADDLE CONNECTION 5
1" = 1'-0"

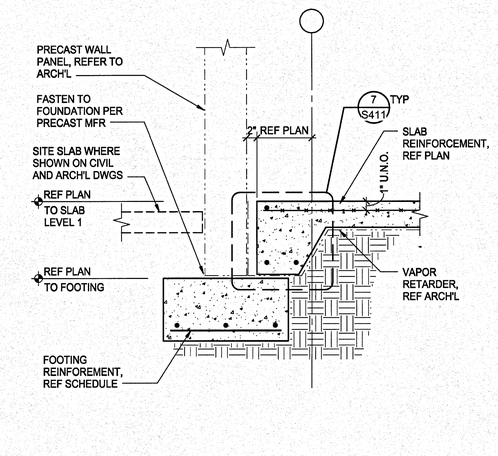

SLAB-ON-GRADE PERIMETER DETAIL 7
1" = 1'-0"

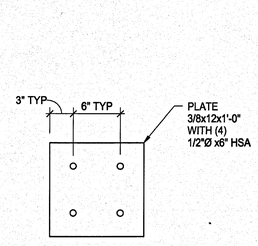

EP-1

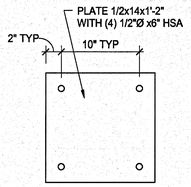

EP-3

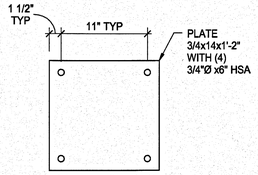

EP-2

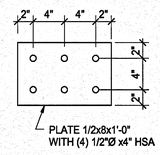

EP-4

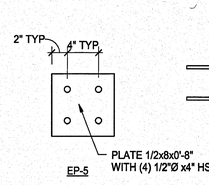

EP-5

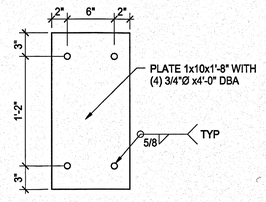

EP-6

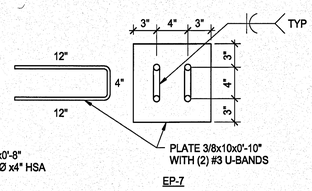

EP-7

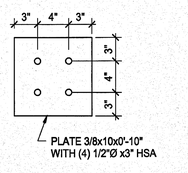

EP-8

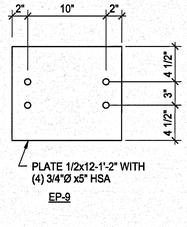

EP-9

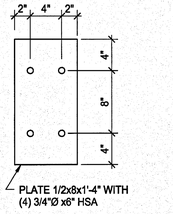

EP-10

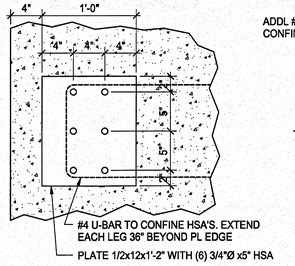

EP-11

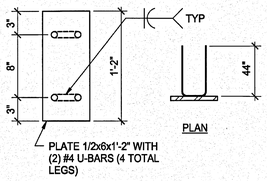

EP-12

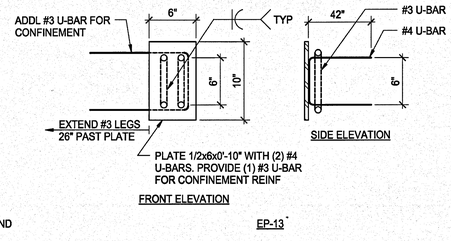

EP-13

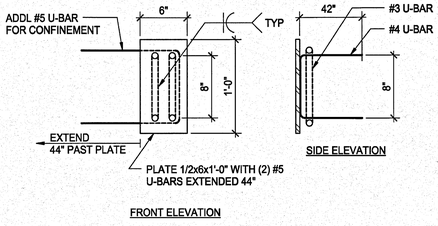

EP-14

EMBED PLATE SCHEDULE 3
1 1/2" = 1'-0"

SYM	ZONE		DATE	APPROVED

REVISIONS

WALTER P MOORE
WALTER P. MOORE AND ASSOCIATES, INC.
800 SOUTH ORANGE AVENUE, SUITE 1100
ORLANDO, FLORIDA 32801.3332
PHONE: 407.418.2218 FAX: 407.418.2267
CERTIFICATE OF AUTHORIZATION NO. 35118
WO: 110009.00
JAIME E. VASQUEZ P.E. NO. 49103
TO THE BEST OF THE ENGINEER'S KNOWLEDGE, THE PLANS AND SPECIFICATIONS COMPLY WITH THE APPLICABLE MINIMUM BUILDING CODES

SIGNATURES	DATE
DRAWN ANDREW MYERS	12.18.13
CHECKED JAIME E. VASQUEZ	12.18.13
SUBMITTED, ARCHITECT OF RECORD JAIME E. VASQUEZ	12-18-13
ST of LICENSURE: FL LICENSE NO. 49103	
APPROVED JOSEPH M. ALES	12/18/13
BRUCE KINNAIRD	12/18/13

NATIONAL AERONAUTICS AND SPACE ADMINISTRATION
JOHN F. KENNEDY SPACE CENTER, NASA
KENNEDY SPACE CENTER, FLORIDA

KSC CENTRAL CAMPUS
REPLACEMENT HEADQUARTERS BUILDING
PHASE 1
VOL. 1 OF 4

FRAMING SECTIONS AND DETAILS

S431

FILE NO.	SIZE	DWG. NO.
C-12070.00	F	79K39622 VOL 1
PCN. NO. 98745.1a		SHEET 157

NOTICE: When Government drawings, specifications, or other data are used for any purpose other than in connection with a definitely related Government procurement operation, the United States Government thereby incurs no responsibility nor obligation whatsoever; and the fact that the Government may have formulated, furnished, or in any way supplied the said drawings, specifications or other data is not to be regarded by implication or otherwise as in any manner licensing the holder or any other person or corporation, or conveying any rights or permission to manufacture, use, or sell any patented invention that may in any way be related thereto.

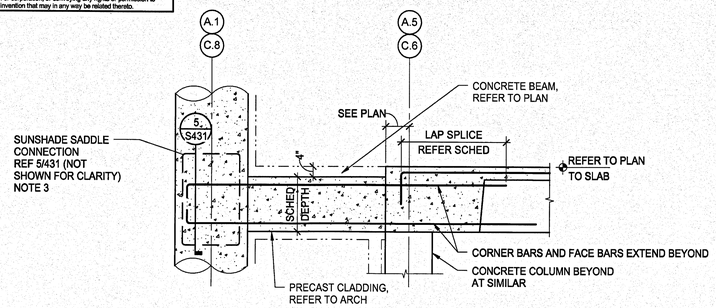

NOTE:
1. REFERENCE BEAM SCHEDULE FOR REINFORCEMENT.
2. PRECAST CONNECTIONS TO PER PRECAST MANUFACTURER.
3. REFERENCE ARCHITECTURAL FOR LOCATION ELEVATION OF SUNSHADES.

COLUMN BRACE AT 2ND LEVEL COLUMNS 1
1/2" = 1'-0"

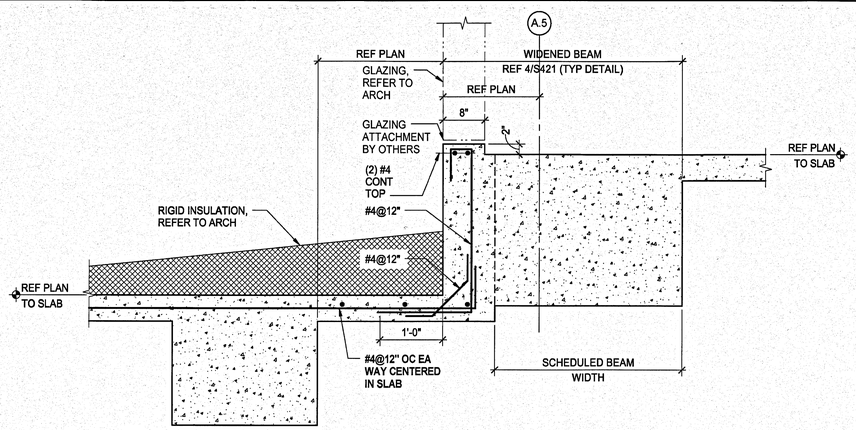

NOTE: BEAM REINFORCEMENT NOT SHOWN FOR CLARITY. REFER TO BEAM SCHEDULE.

CONCRETE STEP AT 2ND LEVEL ROOF 6
1" = 1'-0"

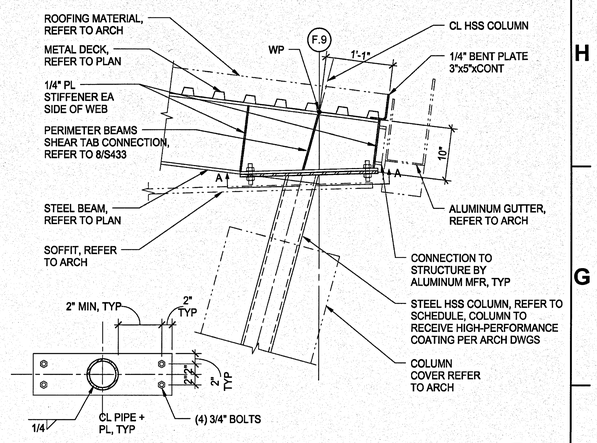

COLUMN AT CAFETERIA ROOF 10
1" = 1'-0"

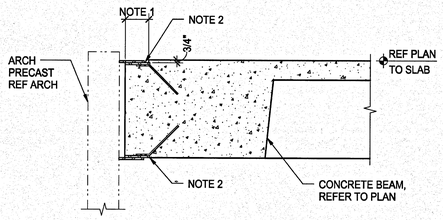

NOTE:
1. COORDINATE SIZE AND LOCATION OF POCKETS FOR PRECAST CONNECTIONS WITH PRECAST MANUFACTURER DRAWINGS.
2. PRECAST CONNECTIONS AS REQUIRED PER MANUFACTURER.
3. BEAM REINFORCEMENT NOT SHOWN FOR CLARITY. REFER TO BEAM SCHEDULE.
4. REFER TO PRECAST ELEVATIONS FOR SUPPORT CONDITION TYPE (LATERAL/GRAVITY REQUIREMENTS)

PRECAST SUPPORT AT CONCRETE BEAM 2
3/4" = 1'-0"

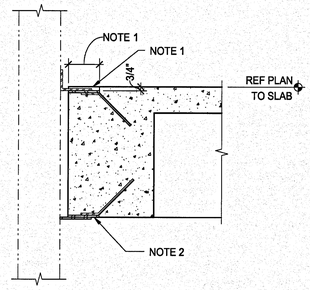

NOTES:
1. COORDINATE SIZE AND LOCATION OF POCKET FOR CURTAIN WALL (OR PRECAST) CONNECTION WITH CURTAIN WALL (OR PRECAST) MFR.
2. CONNECTION AS REQUIRED PER MFR.
3. OMIT CONNECTION AT SIMILAR.
4. BEAM REINFORCEMENT NOT SHOWN FOR CLARITY. REFER TO BEAM SCHEDULE.
5. REFER TO PRECAST ELEVATIONS FOR SUPPORT CONDITION TYPE (LATERAL/GRAVITY REQUIREMENTS)

PRECAST SUPPORT AT CONCRETE BEAM 4
1" = 1'-0"

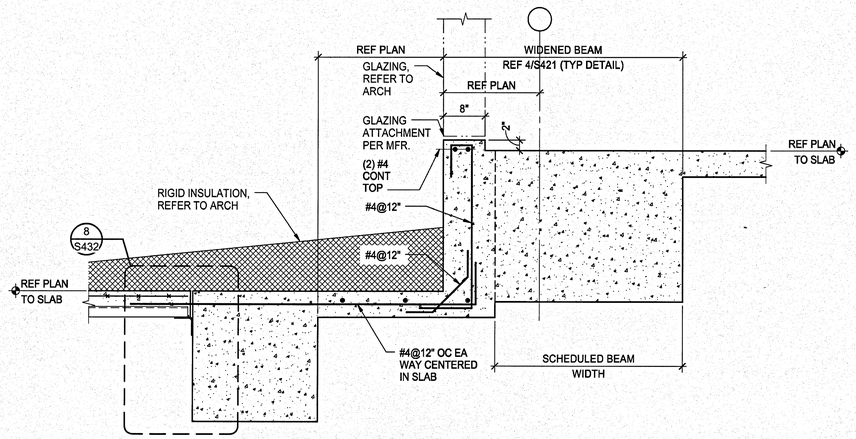

NOTE: BEAM REINFORCEMENT NOT SHOWN FOR CLARITY. REFER TO BEAM SCHEDULE.

CONCRETE STEP AT 2ND LEVEL ROOF 7
1" = 1'-0"

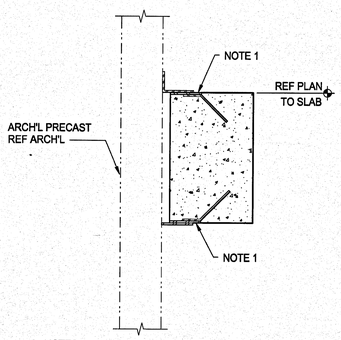

NOTES:
1. PRECAST CONNECTIONS PER MANUFACTURER.
2. BEAM REINFORCEMENT NOT SHOWN FOR CLARITY. REFER TO BEAM SCHEDULE.
3. REFER TO PRECAST ELEVATIONS FOR SUPPORT CONDITION TYPE (LATERAL/GRAVITY REQUIREMENTS)

PRECAST SUPPORT AT CONCRETE BEAM 3
1" = 1'-0"

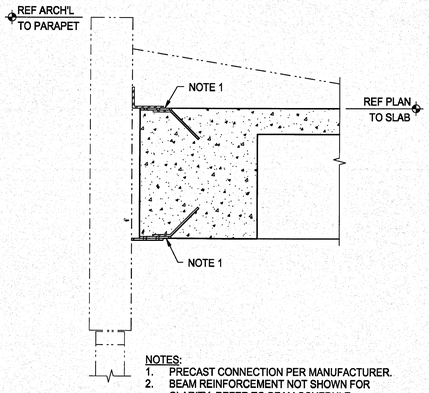

NOTES:
1. PRECAST CONNECTION PER MANUFACTURER.
2. BEAM REINFORCEMENT NOT SHOWN FOR CLARITY. REFER TO BEAM SCHEDULE.
3. REFER TO PRECAST ELEVATIONS FOR SUPPORT CONDITION TYPE (LATERAL/GRAVITY REQUIREMENTS)

PRECAST SUPPORT AT CONCRETE BEAM 5
1" = 1'-0"

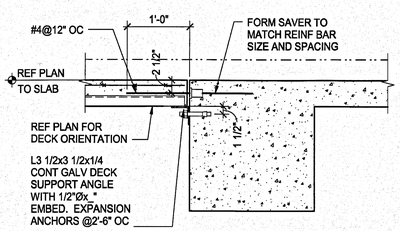

COMPOSITE DECK AT CIP BEAM 8
1" = 1'-0"

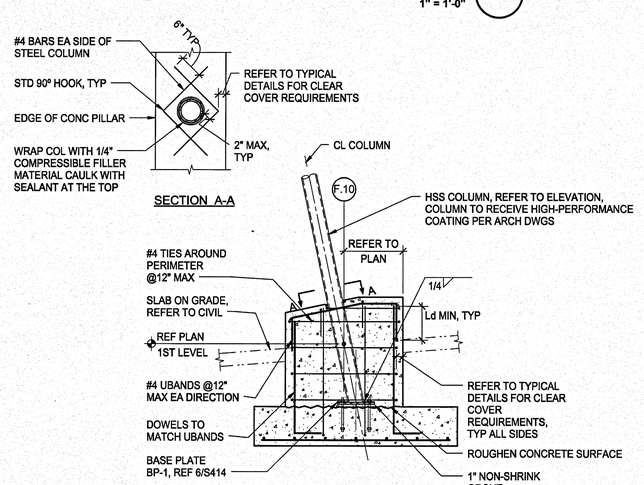

NOTE: REFER TO ARCH DWGS FOR PEDESTAL DIMENSIONS.

COLUMN AT CAFETERIA PEDESTAL 9
1/2" = 1'-0"

SYM	ZONE		DATE	APPROVED

REVISIONS

WALTER P MOORE
WALTER P. MOORE AND ASSOCIATES, INC.
800 SOUTH ORANGE AVENUE, SUITE 1100
ORLANDO, FLORIDA 32801.5932
PHONE: 407.418.2218 FAX: 407.418.2257
CERTIFICATE OF AUTHORIZATION NO. 3818
JAIME E. VASQUEZ P.E. NO. 49103
TO THE BEST OF THE ENGINEER'S KNOWLEDGE, THE PLANS AND SPECIFICATIONS COMPLY WITH THE APPLICABLE MINIMUM BUILDING CODES

SIGNATURES	DATE
DRAWN ANDREW MYERS	12.18.13
CHECKED JAIME E. VASQUEZ	12.18.13
SUBMITTED, ARCH/ENG OF RECORD JAIME E. VASQUEZ	12.18.13
ST of LICENSURE: FL LICENSE NO: 49103	
APPROVED JOSEPH M. ALES	12.18.13
BRUCE KINNAIRD	12/18/13

NATIONAL AERONAUTICS AND SPACE ADMINISTRATION
JOHN F. KENNEDY SPACE CENTER, NASA
KENNEDY SPACE CENTER, FLORIDA

KSC CENTRAL CAMPUS
REPLACEMENT HEADQUARTERS BUILDING
PHASE 1
VOL. 1 OF 4

FRAMING SECTIONS AND DETAILS

FILE NO.	SIZE	DWG. NO.
C-12070.00	F	79K39622 VOL 1

PCN. NO. 98745.1a | SHEET 158

S432

KSC FORM 1-11 (3/76)(C/G 3/94)

NOTICE: When Government drawings, specifications, or other data are used for any purpose other than in connection with a definitely related Government procurement operation, the United States Government thereby incurs no responsibility nor obligation whatsoever; and the fact that the Government may have formulated, furnished, or in any way supplied the said drawings, specifications or other data is not to be regarded by implication or otherwise as in any manner licensing the holder or any other person or corporation, or conveying any rights or permission to manufacture, use, or sell any patented invention that may in any way be related thereto.

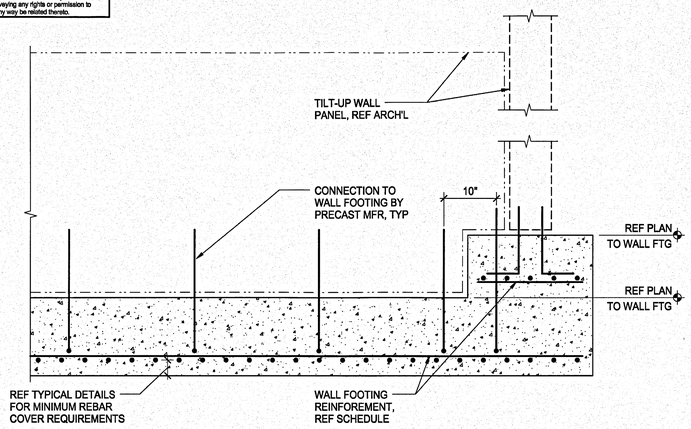

SERVICE YARD WALL FIRST LEVEL INTERSECTION 1
NO SCALE

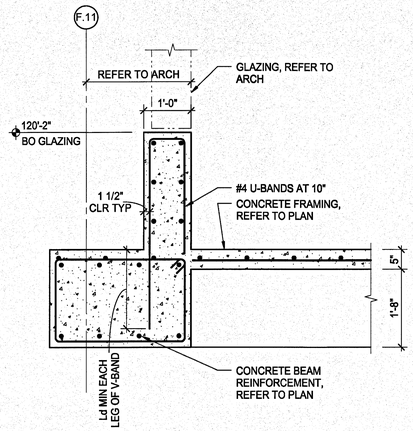

RIBBON WINDOW SUPPORT CURB 4
3/4" = 1'-0"

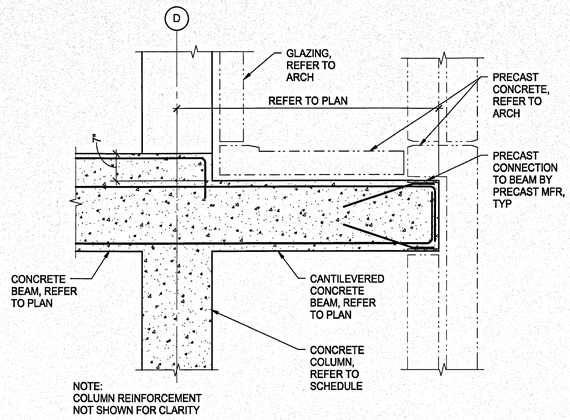

PRECAST SUPPORT AT CIP CANTILEVER 7
3/4" = 1'-0"

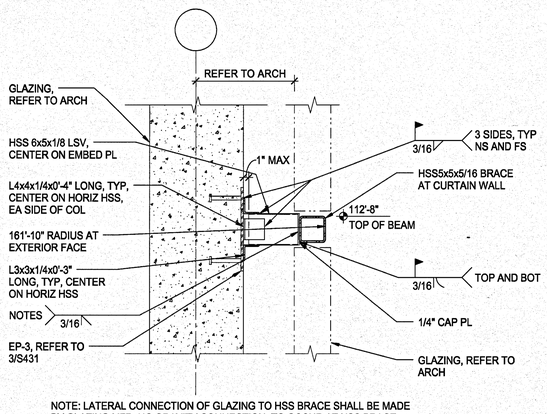

GLAZING BRACE AT LOBBY TOWER 2
1" = 1'-0"

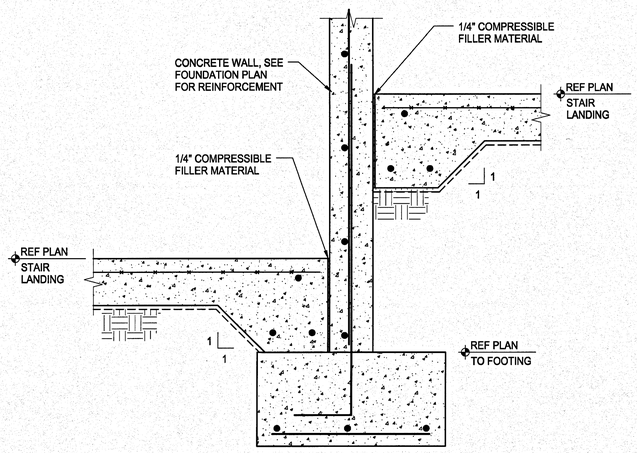

STEP AT STAIR LANDING 5
1 1/2" = 1'-0"

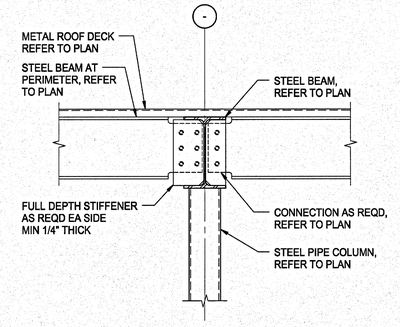

PERIMETER BEAM CONNECTION DETAIL 8
1" = 1'-0"

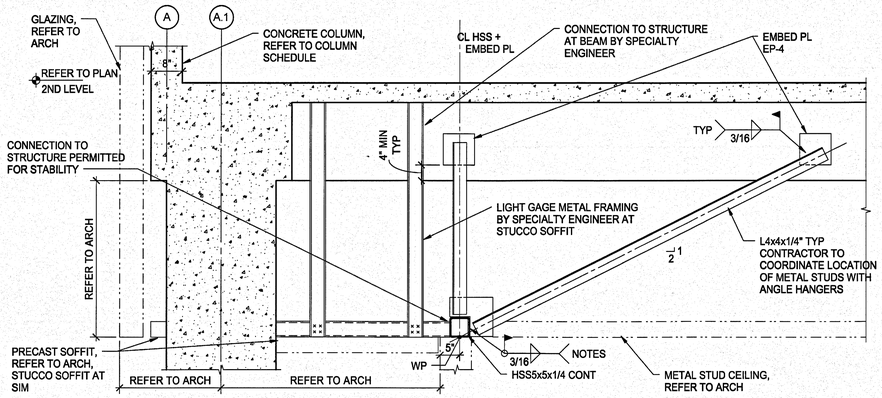

NOTES:
1. CONNECTIONS OF PRECAST AND GLAZING TO CIP AND STEEL STRUCTURE BY RESPECTIVE MFR.
2. CONCRETE REINFORCEMENT NOT SHOWN FOR CLARITY.
3. LIGHT GAGE FRAMING SHOWN DEPICTS SCHEMATIC INTENT. SPECIALTY ENGINEER TO REVISE FRAMING AS NEEDED AND DESIGN FRAMING TO RESIST APPLIED LOADS AND PROVIDE STABILITY.
4. REFER TO COMPONENTS AND CLADDING DRAWINGS FOR WIND PRESSURES.

2ND LEVEL GLAZING SUPPORT 3
NO SCALE

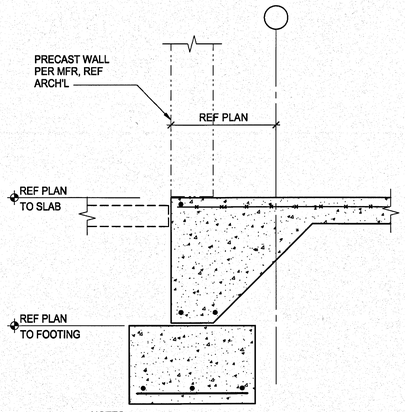

NOTES:
1. REFERENCE 8/S431 FOR BALANCE OF INFORMATION NOT SHOWN.

SLAB-ON-GRADE PERIMETER DETAIL 6
1" = 1'-0"

SYM	ZONE		DATE	APPROVED
		REVISIONS		

WALTER P MOORE
WALTER P. MOORE AND ASSOCIATES, INC.
900 SOUTH ORANGE AVENUE, SUITE 1100
ORLANDO, FLORIDA 32801-3332
PHONE: 407.418.2218 FAX: 407.418.2267
CERTIFICATE OF AUTHORIZATION NO. 3018
007-11220.00
JAIME E. VASQUEZ P.E. NO. 49103
TO THE BEST OF THE ENGINEER'S KNOWLEDGE, THE PLANS AND SPECIFICATIONS COMPLY WITH THE APPLICABLE MINIMUM BUILDING CODES

SIGNATURES	DATE
DRAWN ANDREW MYERS	12.18.13
CHECKED JAIME E. VASQUEZ	12.18.13
SUBMITTED: ARCHITECT OF RECORD JAIME E. VASQUEZ	12.18.13
ST of LICENSURE: FL LICENSE NO: 49103	
APPROVED JOSEPH M. ALES	12.18.13
BRUCE KINNAIRD	12/19/13

NATIONAL AERONAUTICS AND SPACE ADMINISTRATION
JOHN F. KENNEDY SPACE CENTER, NASA
KENNEDY SPACE CENTER, FLORIDA

KSC CENTRAL CAMPUS
REPLACEMENT HEADQUARTERS BUILDING
PHASE 1
VOL. 1 OF 4

FRAMING SECTIONS AND DETAILS

FILE NO.	SIZE	DWG. NO.
C-12070.00	F	79K39622 VOL 1
PCN. NO. 98745.1a		SHEET 159

S433

NOTICE: When Government drawings, specifications, or other data are used for any purpose other than in connection with a definitely related Government procurement operation, the United States Government thereby incurs no responsibility nor obligation whatsoever; and the fact that the Government may have formulated, furnished, or in any way supplied the said drawings, specifications or other data is not to be regarded by implication or otherwise as in any manner licensing the holder or any other person or corporation, or conveying any rights or permission to manufacture, use, or sell any patented invention that may in any way be related thereto.

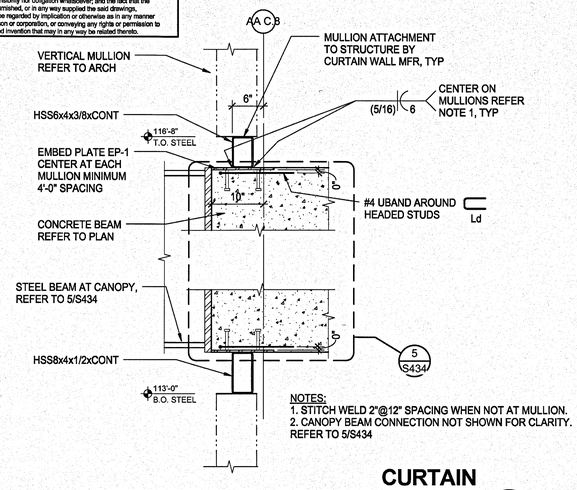

NOTES:
1. STITCH WELD 2"@12" SPACING WHEN NOT AT MULLION.
2. CANOPY BEAM CONNECTION NOT SHOWN FOR CLARITY. REFER TO 5/S434

CURTAIN WALL SUPPORT AT LOBBY CANOPY 1
NO SCALE

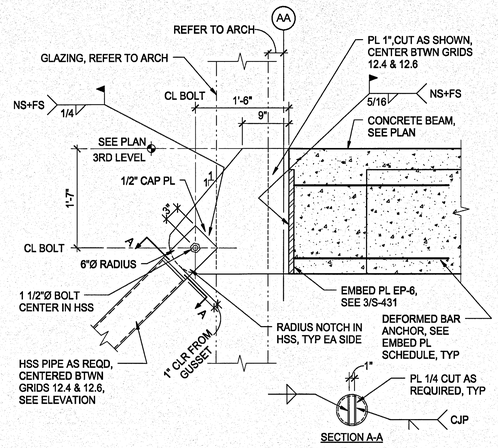

SECTION A-A

LOBBY CANOPY HIGH STRUT CONNECTION 4
NO SCALE

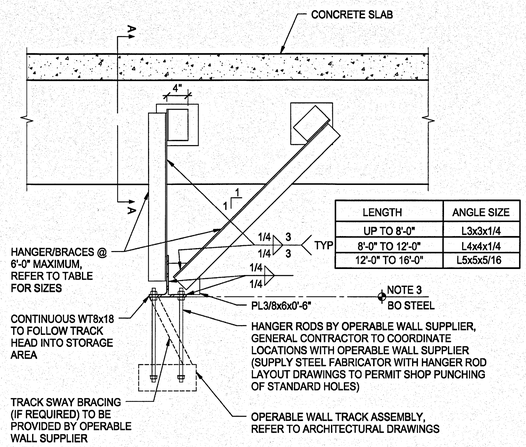

LENGTH	ANGLE SIZE
UP TO 8'-0"	L3x3x1/4
8'-0" TO 12'-0"	L4x4x1/4
12'-0" TO 16'-0"	L5x5x5/16

OPERABLE WALL SUPPORT BETWEEN BEAMS 7
NO SCALE

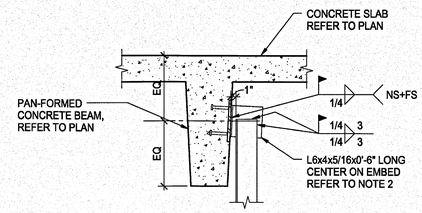

SECTION A-A

NOTES:
1. CONCRETE BEAM AND SLAB REINFORCEMENT NOT SHOWN FOR CLARITY.
2. CONNECTION ROTATED AT SIM, REFER TO DETAIL FOR ORIENTATION.
3. BOTTOM OF STEEL ELEVATION, ACCORDING TO THE PARTITION MANUFACTURER SHALL BE 1'-0" ABOVE CEILING ELEVATION. COORDINATE WITH ARCHITECTURAL AND PARTITION MANUFACTURER.

SECTION A-A

NOTES:
1. CONNECTION OF PREMANUFACTURED ALUMINUM CANOPY PER MANUFACTURER. TRANSFER SHEAR TO END PLATE ONLY AND MOMENT TO TAPERED BEAMS TOP AND BOTTOM FLANGE ONLY.
2. STEEL FABRICATOR TO COORDINATE BOLT HOLES AND OTHER CONNECTION REQUIREMENTS WITH ALUMINUM CANOPY MFR.
3. REFER TO COMPONENTS AND CLADDING PRESSURE TABLES IN GENERAL NOTES FOR SOFFIT OVERHANG PRESSURES.

LOBBY CANOPY GUSSET CONNECTION 2
3/4" = 1'-0"

NOTE:
1. REFER TO COMPONENTS AND CLADDING PRESSURE TABLES IN GENERAL NOTES FOR SOFFIT OVERHANG PRESSURES.

SECTION AA

LOBBY CANOPY AT TOWER 5
NO SCALE

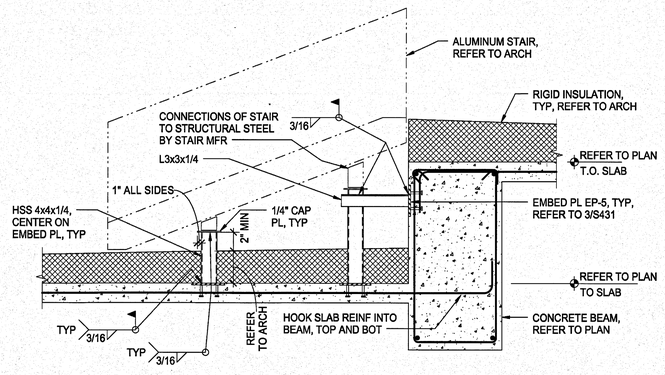

NOTE: CONTRACTOR TO COORDINATE PLACEMENT OF HSS SUPPORTS AND EMBEDS WITH STAIR MFR.

ROOF STAIR SUPPORTS 3
3/4" = 1'-0"

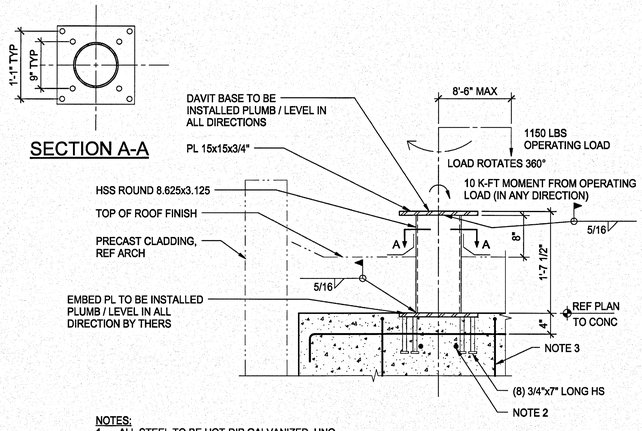

NOTES:
1. ALL STEEL TO BE HOT-DIP GALVANIZED, UNO.
2. PROVIDE (2) #4x4'-0" EA WAY. HOOK BARS WHERE STRAIGHT BAR WILL NOT FIT.
3. PROVIDE (1) ADDITIONAL STIRRUP EA DIDE OF EMBED PLATE, 3" CLEAR FROM STUDS (TYP).

WINDOW WASHING DAVIT PEDESTAL 6
1" = 1'-0"

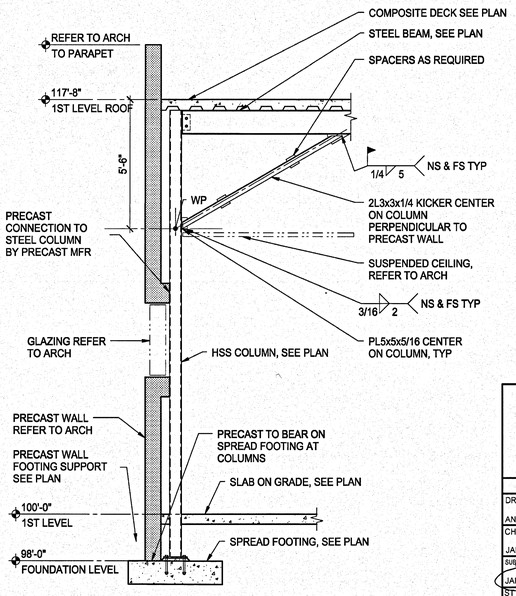

COLUMN BRACE AT EXTERIOR PRECAST 8
3/8" = 1'-0"

SYM	ZONE		DATE	APPROVED
		REVISIONS		

WALTER P MOORE
WALTER P. MOORE AND ASSOCIATES, INC.
300 SOUTH ORANGE AVENUE, SUITE 1100
ORLANDO, FLORIDA 32801.5032
PHONE: 407.418.2219 FAX: 407.418.2257
CERTIFICATE OF AUTHORIZATION NO. 3818
007-11023-00
JAIME E. VASQUEZ P.E. NO. 49103
TO THE BEST OF THE ENGINEER'S KNOWLEDGE, THE PLANS AND SPECIFICATIONS COMPLY WITH THE APPLICABLE MINIMUM BUILDING CODES

SIGNATURES	DATE
DRAWN	
ANDREW MYERS	12.18.13
CHECKED	
JAIME E. VASQUEZ	12.18.13
SUBMITTED, AR/ENG OF RECORD	12.18.13
JAIME E. VASQUEZ	
ST OF LICENSURE: FL	
LICENSE NO: 49103	
APPROVED	
JOSEPH M. KLES	12.18.13
BRUCE KINNAIRD	12/18/13

NATIONAL AERONAUTICS AND SPACE ADMINISTRATION
JOHN F. KENNEDY SPACE CENTER, NASA
KENNEDY SPACE CENTER, FLORIDA

KSC CENTRAL CAMPUS
REPLACEMENT HEADQUARTERS BUILDING
PHASE 1
VOL. 1 OF 4

FRAMING SECTIONS AND DETAILS

FILE NO.	SIZE	DWG. NO.
C-12070.00	F	79K39622 VOL 1

PCN. NO. 98745.1a | SHEET 160

S434

KSC FORM 1-11 (3/76)(C/G 3/94)

NOTICE: When Government drawings, specifications, or other data are used for any purpose other than in connection with a definitely related Government procurement operation, the United States Government thereby incurs no responsibility nor obligation whatsoever; and the fact that the Government may have formulated, furnished, or in any way supplied the said drawings, specifications or other data is not to be regarded by implication or otherwise as in any manner licensing the holder or any other person or corporation, or conveying any rights or permission to manufacture, use, or sell any patented invention that may in any way be related thereto.

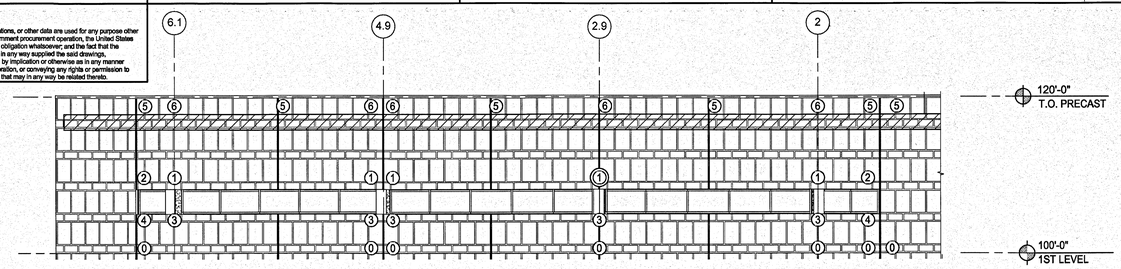

NOTES:
1. THE DETAIL ABOVE SHOWS THE ONLY LOCATIONS WHERE LOADS CAN BE TRANSFERRED TO THE STRUCTURE AND LOCATIONS WHERE PANELS HAVE BEEN ASSUMED TO BE SUPPORTED BY OTHER ADJACENT PANELS.

⓪ GRAVITY AND LATERAL SUPPORT FROM CONTINUOUS STRIP FOOTING

① GRAVITY SUPPORT. PRECAST UPPER PANEL BEARS ON LOWER PRECAST PANEL. LATERAL SUPPORT FROM COLUMN.

② GRAVITY AND LATERAL SUPPORT FROM ADJACENT PRECAST PANEL AS REQUIRED.

③ LATERAL SUPPORT FROM STEEL COLUMN

④ LATERAL SUPPORT FROM ADJACENT PRECAST PANEL AS REQUIRED.

⑤ LATERAL SUPPORT FROM ROOF TOP OF ROOF STEEL BEAM AS REQUIRED.

⑥ GRAVITY AND LATERAL SUPPORT FROM TOP OF ROOF STEEL BEAM IF REQUIRED.

LOW RISE PRECAST SUPPORT POINTS 1
NO SCALE

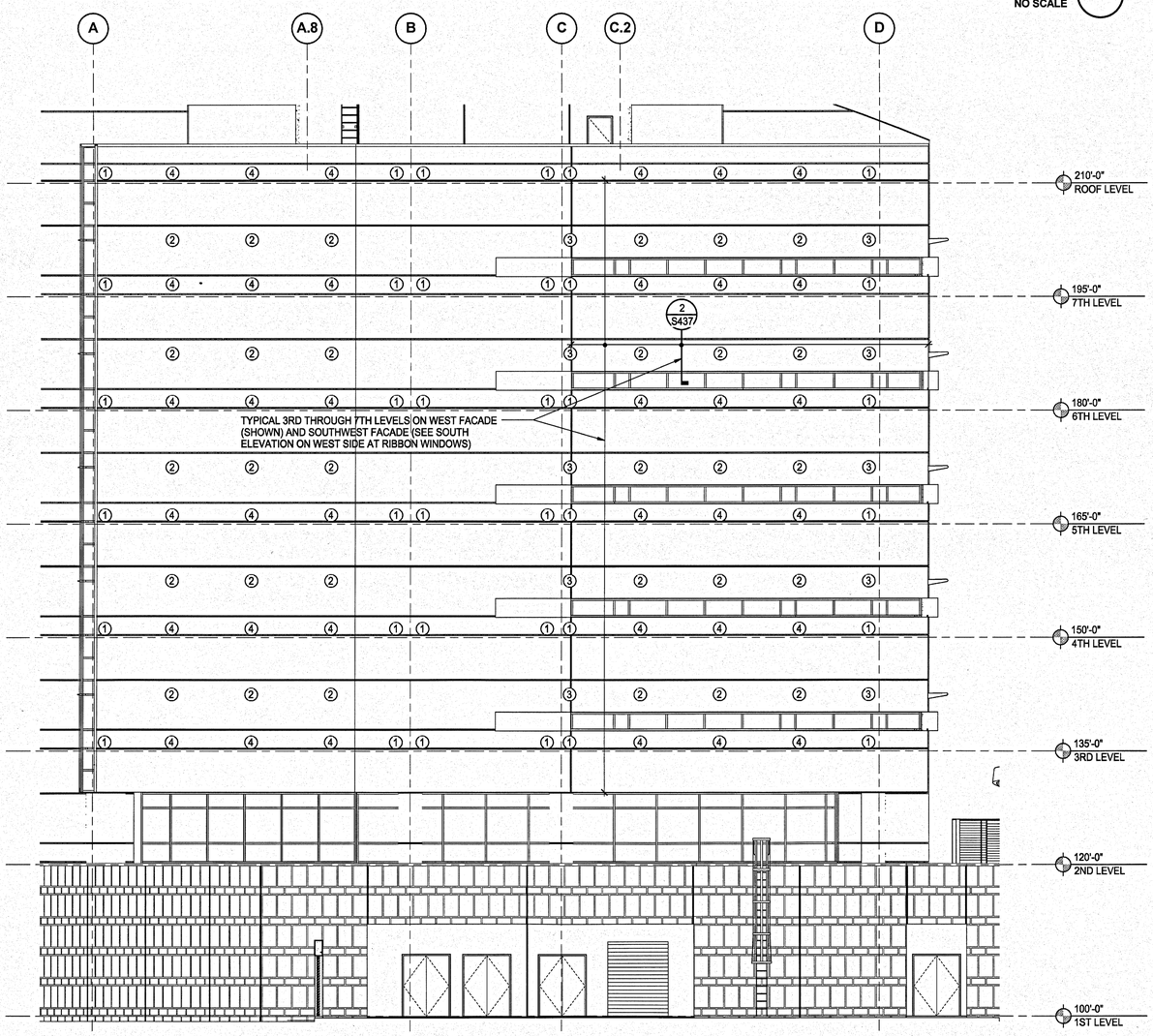

TOWER WEST SIDE PRECAST SUPPORT POINTS 2
NO SCALE

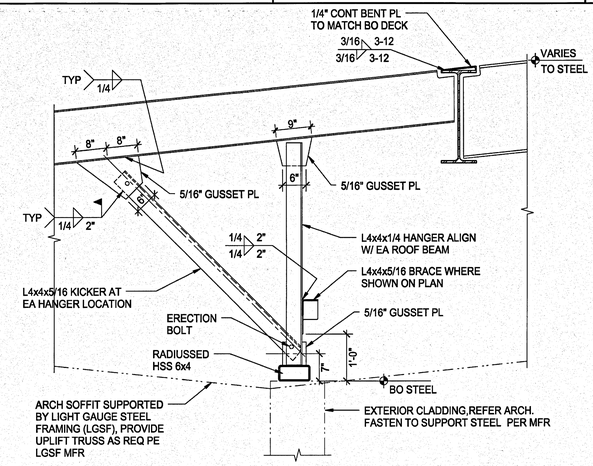

CAFETERIA GLAZING BRACE DETAIL 3
3/4" = 1'-0"

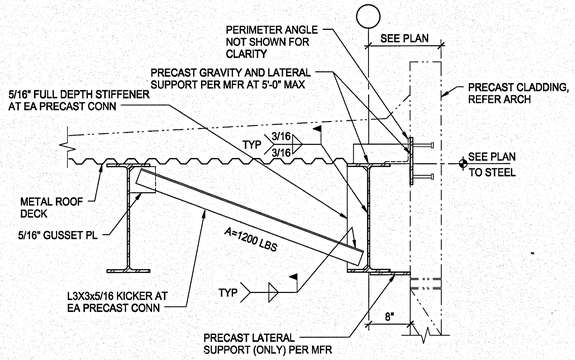

PENTHOUSE ROOF PERIMETER DETAIL 4
1" = 1'-0"

NOTES:
1. THE DETAIL ABOVE SHOWS THE ONLY LOCATIONS WHERE LOADS CAN BE TRANSFERRED TO THE STRUCTURE

① GRAVITY SUPPORT FROM FLOOR. SUPPORT SHALL NOT BE FURTHER THAN 3FT FROM COLUMN CENTER LINE.

② LATERAL SUPPORT PROVIDED BY BRACES SUPPLIED BY PRECAST MANUFACTURER.

③ LATERAL SUPPORT FROM CONCRETE COLUMN.

④ LATERAL SUPPORT FROM FLOOR SLAB AS REQUIRED.

SYM	ZONE		DATE	APPROVED

REVISIONS

WALTER P MOORE
WALTER P. MOORE AND ASSOCIATES, INC.
300 SOUTH ORANGE AVENUE, SUITE 1180
ORLANDO, FLORIDA 32801,3382
PHONE: 407.418.2218 FAX: 407.418.2267
CERTIFICATE OF AUTHORIZATION NO. 3818
EOR11029.00
JAIME E. VASQUEZ P.E. NO. 49103
TO THE BEST OF THE ENGINEER'S KNOWLEDGE, THE PLANS AND SPECIFICATIONS COMPLY WITH THE APPLICABLE MINIMUM BUILDING CODES

SIGNATURES	DATE
DRAWN ANDREW MYERS	12.18.13
CHECKED JAIME E. VASQUEZ	12.18.13
SUBMITTED, ARCHITECT OF RECORD JAIME E. VASQUEZ	12.18.13
ST of LICENSURE: FL LICENSE NO: 49103	
APPROVED JOSEPH M. ALES	12.18.13
BRUCE KINNAIRD	12/19/13

NATIONAL AERONAUTICS AND SPACE ADMINISTRATION
JOHN F. KENNEDY SPACE CENTER, NASA
KENNEDY SPACE CENTER, FLORIDA

KSC CENTRAL CAMPUS
REPLACEMENT HEADQUARTERS BUILDING
PHASE 1
VOL. 1 OF 4

FRAMING SECTIONS AND DETAILS

S435

FILE NO.	SIZE	DWG. NO.	
C-12070.00	F	79K39622 VOL 1	
PCN. NO. 98745.1a		SHEET 161	

NOTICE: When Government drawings, specifications, or other data are used for any purpose other than in connection with a definitely related Government procurement operation, the United States Government thereby incurs no responsibility nor obligation whatsoever; and the fact that the Government may have formulated, furnished, or in any way supplied the said drawings, specifications or other data is not to be regarded by implication or otherwise as in any manner licensing the holder or any other person or corporation, or conveying any rights or permission to manufacture, use, or sell any patented invention that may in any way be related thereto.

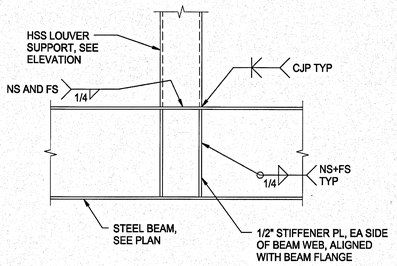

MECHANICAL SCREEN WALL SUPPORT 1

1" = 1'-0"

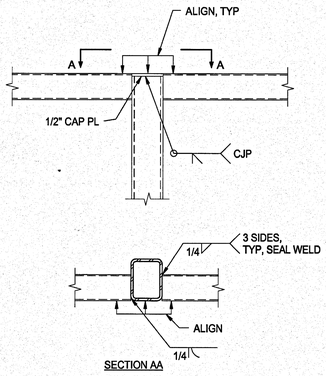

NOTES:
1. FRAMING CONFIGURATION VARIES AT SIM SEE PLAN

MECHANICAL SCREEN WALL SUPPORT 2

1" = 1'-0"

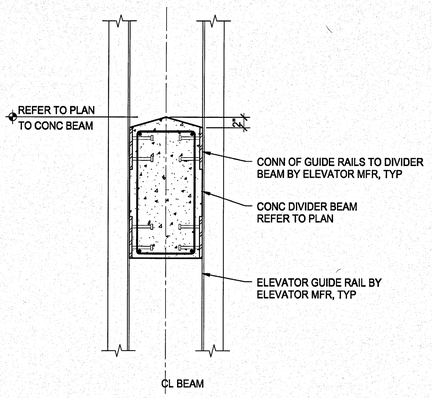

NOTE:
1. CONTRACTOR TO COORDINATE PLACEMENT OF GUIDE RAIL CONNECTIONS WITH CONCRETE BEAM REINFORCEMENT.

TYPICAL CONCRETE ELEVATOR DIVIDER BEAM 3

1" = 1'-0"

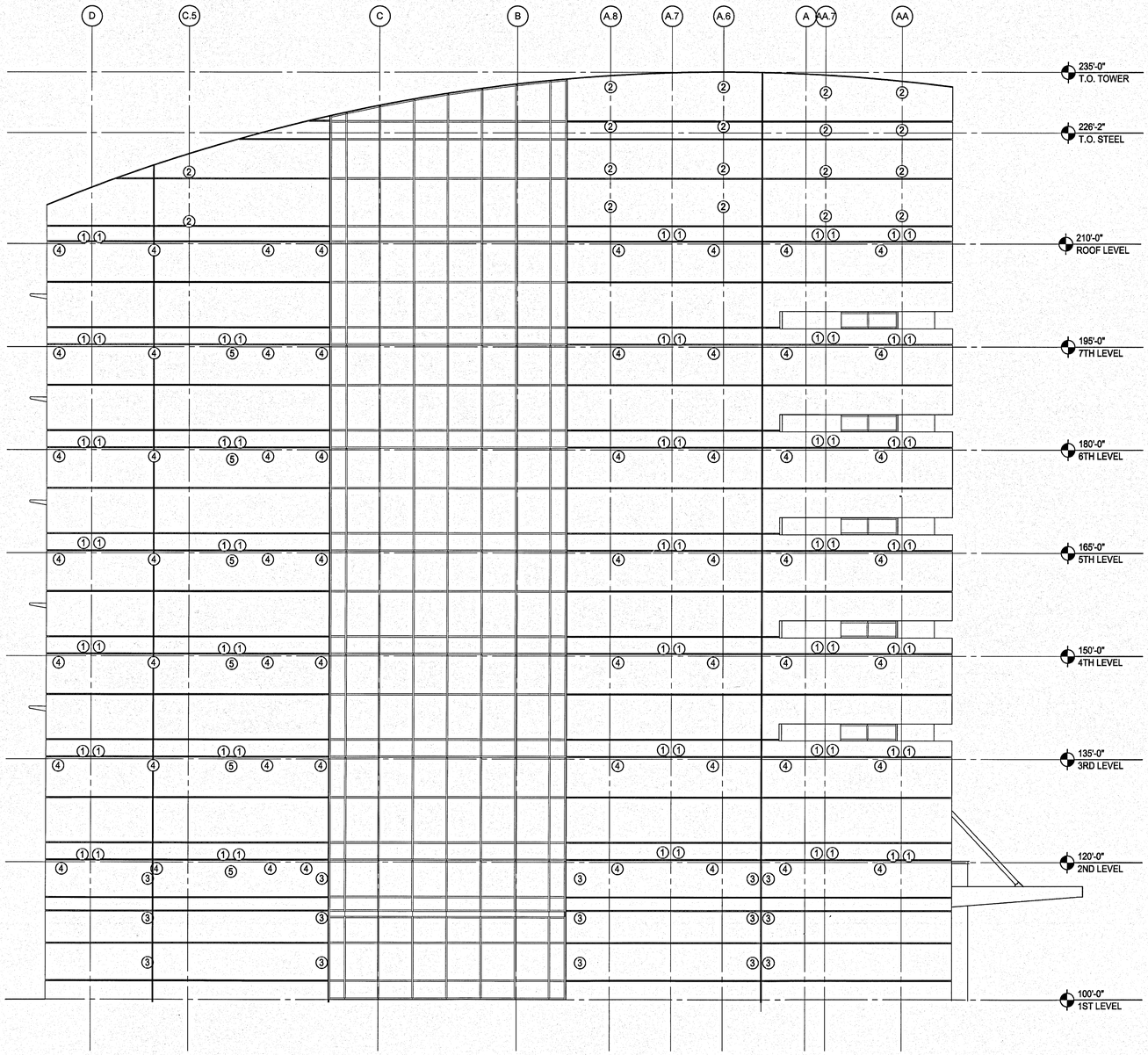

NOTES:
1. THE DETAIL ABOVE SHOWS THE ONLY LOCATIONS WHERE LOADS CAN BE TRANSFERRED TO THE STRUCTURE
(1) GRAVITY SUPPORT FROM FLOOR. SUPPORT SHALL NOT BE FURTHER THAN 3FT FROM COLUMN CENTER LINE.
(2) GRAVITY/LATERAL SUPPORT BY CONCRETE COLUMN.
(3) LATERAL SUPPORT FROM STEEL COLUMN.
(4) LATERAL SUPPORT FROM FLOOR SLAB OR CONCRETE BEAM AS REQD.
(5) LATERAL SUPPORT FROM SHEAR WALL

TOWER EAST SIDE PRECAST SUPPORT POINTS 4

1/8" = 1'-0"

SYM	ZONE	REVISIONS	DATE APPROVED

WALTER P MOORE
WALTER P. MOORE AND ASSOCIATES, INC.
300 SOUTH ORANGE AVENUE, SUITE 1100
ORLANDO, FLORIDA 32801-3332
PHONE: 407.418.2218 FAX: 407.418.2257
CERTIFICATE OF AUTHORIZATION NO. 28118
007-11223-00
JAIME E. VASQUEZ P.E. NO. 49103
TO THE BEST OF THE ENGINEER'S KNOWLEDGE, THE PLANS AND SPECIFICATIONS COMPLY WITH THE APPLICABLE MINIMUM BUILDING CODES

SIGNATURES	DATE
DRAWN ANDREW MYERS	12.18.13
CHECKED JAIME E. VASQUEZ	12.18.13
SUBMITTED AND SEALED RECORD JAIME E. VASQUEZ	12-18-13
ST of LICENSURE: FL LICENSE NO. 49103	
APPROVED JOSEPH M. RIGGS	12-18-13
BRUCE KINNAIRD	12/18/13

NATIONAL AERONAUTICS AND SPACE ADMINISTRATION
JOHN F. KENNEDY SPACE CENTER, NASA
KENNEDY SPACE CENTER, FLORIDA

KSC CENTRAL CAMPUS
REPLACEMENT HEADQUARTERS BUILDING
PHASE 1
VOL. 1 OF 4

FRAMING SECTIONS AND DETAILS

FILE NO.	SIZE	DWG. NO.
C-12070.00	F	79K39622 VOL 1
PCN. NO. 98745.1a		SHEET 162

S436

NOTICE: When Government drawings, specifications, or other data are used for any purpose other than in connection with a definitely related Government procurement operation, the United States Government thereby incurs no responsibility nor obligation whatsoever; and the fact that the Government may have formulated, furnished, or in any way supplied the said drawings, specifications or other data is not to be regarded by implication or otherwise as in any manner licensing the holder or any other person or corporation, or conveying any rights or permission to manufacture, use, or sell any patented invention that may in any way be related thereto.

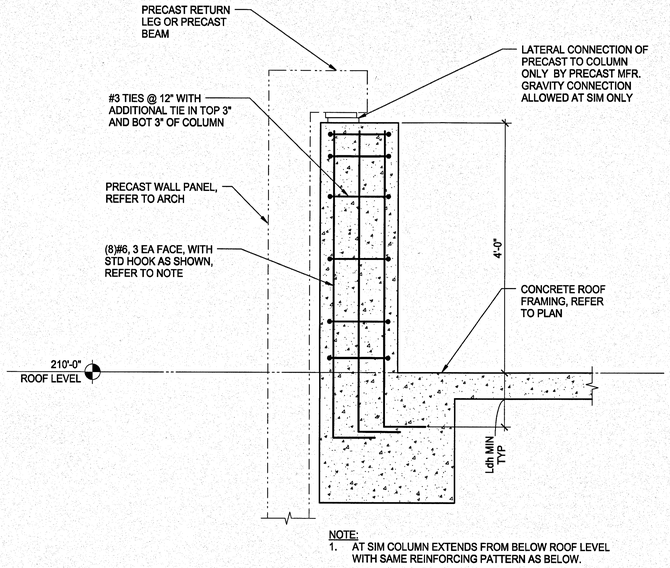

NOTE:
1. AT SIM COLUMN EXTENDS FROM BELOW ROOF LEVEL WITH SAME REINFORCING PATTERN AS BELOW.

ROOF COLUMN PARAPET 1
1" = 1'-0"

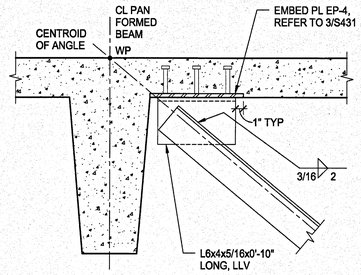

BRACE DETAIL 3
1 1/2" = 1'-0"

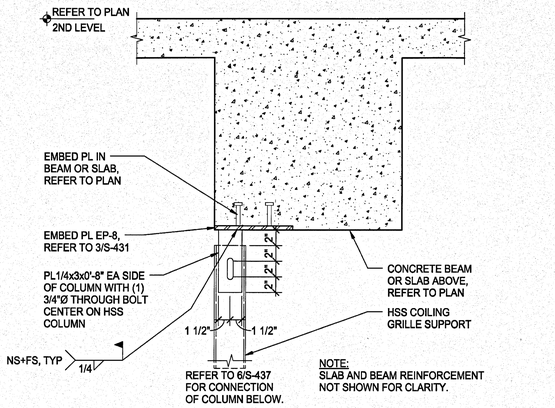

NOTE:
SLAB AND BEAM REINFORCEMENT NOT SHOWN FOR CLARITY.

COILING GRILLE SUPPORT COLUMN (TOP) 5
1 1/2" = 1'-0"

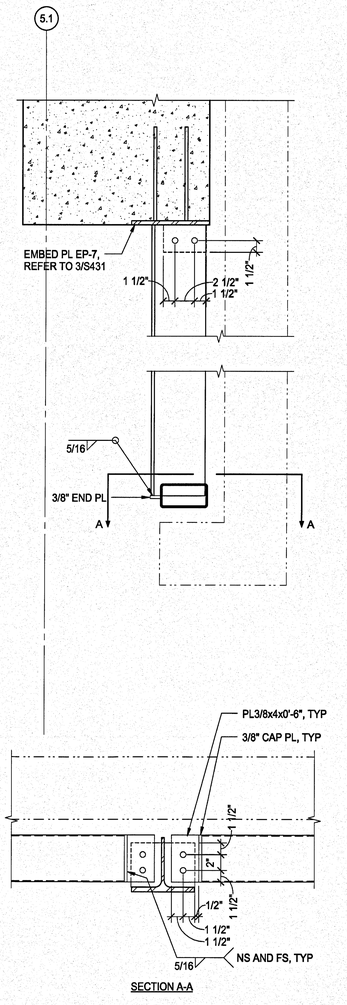

RIBBON WINDOW BRACE DETAIL 4
1 1/2" = 1'-0"

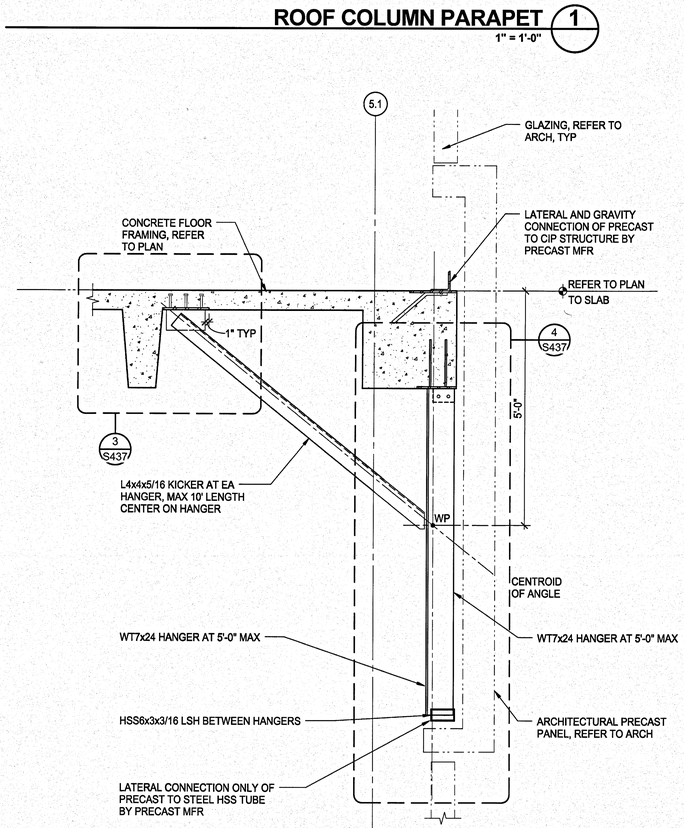

NOTE: BEAM REINFORCEMENT NOT SHOWN FOR CLARITY.

PRECAST BRACING AT RIBBON WINDOW 2
3/4" = 1'-0"

SECTION A-A

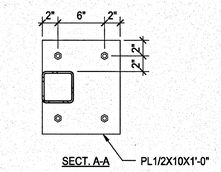

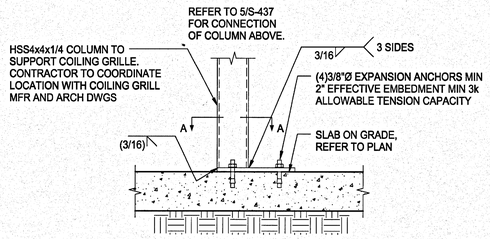

COILING GRILLE SUPPORT COLUMN (BOTTOM) 6
1 1/2" = 1'-0"

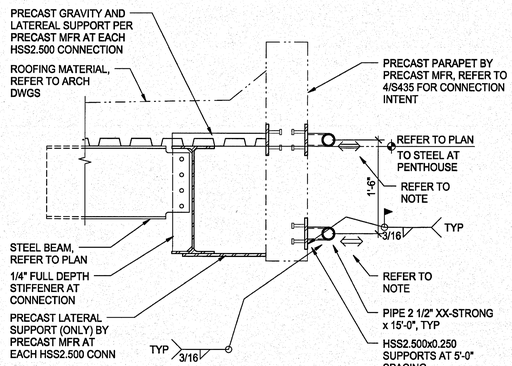

NOTE:
5K ULTIMATE WIND LOAD OCCURS IN ANY PLAN DIRECTION (NOT APPLICABLE TO GRAVITY) AT EA HSS 2.500 CONN.

ANTENNA SUPPORT AT PENTHOUSE ROOF 7
1" = 1'-0"

SYM	ZONE	REVISIONS	DATE APPROVED

WALTER P MOORE
WALTER P. MOORE AND ASSOCIATES, INC.
900 SOUTH ORANGE AVENUE, SUITE 1100
ORLANDO, FLORIDA 32801.3332
PHONE: 407.418.2210 FAX: 407.418.2267
CERTIFICATE OF AUTHORIZATION NO. 3818
SSY-11093-00
JAIME E. VASQUEZ P.E. NO. 49103
TO THE BEST OF THE ENGINEER'S KNOWLEDGE, THE PLANS AND SPECIFICATIONS COMPLY WITH THE APPLICABLE MINIMUM BUILDING CODES

SIGNATURES	DATE
DRAWN ANDREW MYERS	12.18.13
CHECKED JAIME E. VASQUEZ	12.18.13
SUBMITTED, ARCHITECT OF RECORD JAIME E. VASQUEZ	12.18.13
ST of LICENSURE: FL LICENSE NO: 49103	
APPROVED JOSEPH M. ALES	12/18/13
BRUCE KINNAIRD	12/18/13

NATIONAL AERONAUTICS AND SPACE ADMINISTRATION
JOHN F. KENNEDY SPACE CENTER, NASA
KENNEDY SPACE CENTER, FLORIDA

KSC CENTRAL CAMPUS
REPLACEMENT HEADQUARTERS BUILDING
PHASE 1
VOL. 1 OF 4

FRAMING SECTIONS AND DETAILS

FILE NO.	SIZE	DWG. NO.
C-12070.00	F	79K39622 VOL 1
PCN. NO. 98745.1a		SHEET 163

S437

KSC FORM 1-11 (3/78)(C/G 3/94)

NOTICE: When Government drawings, specifications, or other data are used for any purpose other than in connection with a definitely related Government procurement operation, the United States Government thereby incurs no responsibility nor obligation whatsoever; and the fact that the Government may have formulated, furnished, or in any way supplied the said drawings, specifications or other data is not to be regarded by implication or otherwise as in any manner licensing the holder or any other person or corporation, or conveying any rights or permission to manufacture, use, or sell any patented invention that may in any way be related thereto.

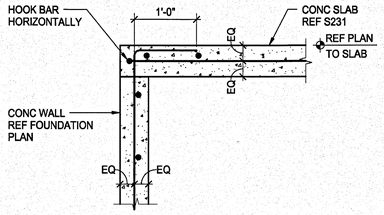

SECTION 1
1" = 1'-0"

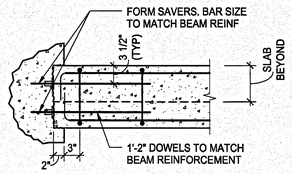

DETAIL A

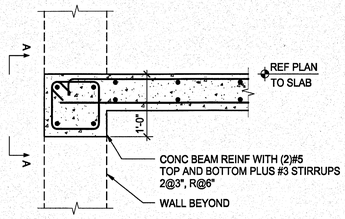

NOTES:
1. SEE PLAN FOR SLAB REINFORCEMENT.

SECTION AT BEAM 4
1" = 1'-0"

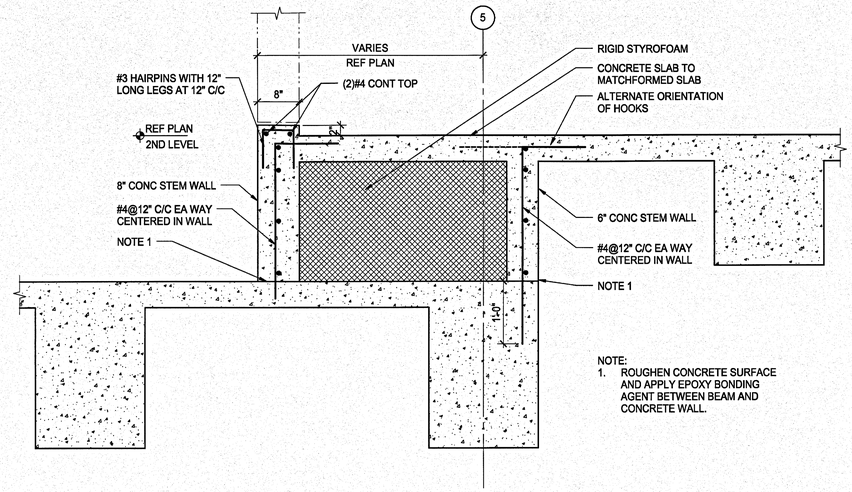

NOTE:
1. ROUGHEN CONCRETE SURFACE AND APPLY EPOXY BONDING AGENT BETWEEN BEAM AND CONCRETE WALL.

WEST ROOF STEP AT CIP LOW ROOF 7
1" = 1'-0"

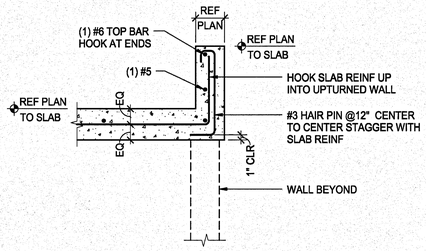

SECTION TROUGH UPTURNED WALL 2
1" = 1'-0"

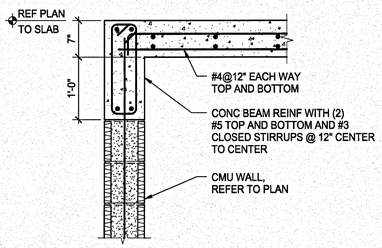

NOTE:
1. SEE PLAN FOR SLAB REINFORCEMENT.

SECTION AT RATED LOBBY SLAB 5
1" = 1'-0"

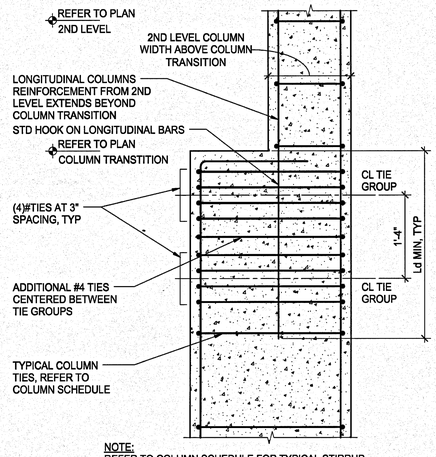

NOTE:
REFER TO COLUMN SCHEDULE FOR TYPICAL STIRRUP SIZE, SPACING AND LONGITUDINAL REINFORCEMENT.

COLUMN TRANSITION REINFORCEMENT 8
1" = 1'-0"

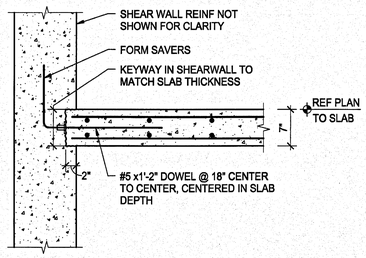

NOTES:
1. SEE PLAN FOR SLAB REINFORCEMENT.

SLAB SUPPORT AT SHEARWALL 3
1" = 1'-0"

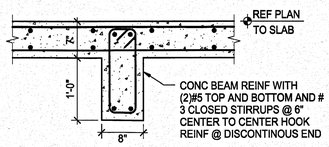

NOTE:
1. SEE PLAN FOR REINFORCEMENT.

SECTION AT BEAM 6
1" = 1'-0"

SYM	ZONE		DATE	APPROVED
		REVISIONS		

WALTER P MOORE
WALTER P. MOORE AND ASSOCIATES, INC.
800 SOUTH ORANGE AVENUE, SUITE 1100
ORLANDO, FLORIDA 32801.3552
PHONE: 407.418.2218 FAX: 407.418.2257
CERTIFICATE OF AUTHORIZATION NO. 3818
807-11023-00
JAIME E. VASQUEZ P.E. NO. 49103
TO THE BEST OF THE ENGINEER'S KNOWLEDGE, THE PLANS AND SPECIFICATIONS COMPLY WITH THE APPLICABLE MINIMUM BUILDING CODES

SIGNATURES	DATE
DRAWN ANDREW MYERS	12.18.13
CHECKED JAIME E. VASQUEZ	12.18.13
SUBMITTED, ARCHITECT OF RECORD JAIME E. VASQUEZ	12.18.13
ST of LICENSURE: FL LICENSE NO: 49103	
APPROVED JOSEPH M. AKES	12.18.13
BRUCE KINNAIRD	12/18/13

NATIONAL AERONAUTICS AND SPACE ADMINISTRATION
JOHN F. KENNEDY SPACE CENTER, NASA
KENNEDY SPACE CENTER, FLORIDA

KSC CENTRAL CAMPUS
REPLACEMENT HEADQUARTERS BUILDING
PHASE 1
VOL. 1 OF 4

FRAMING SECTIONS AND DETAILS

S438

FILE NO.	SIZE	DWG. NO.
C-12070.00	F	79K39622 VOL 1
PCN. NO. 98745.1a		SHEET 164

KSC FORM 1-11 (3/76)(C/G 3/94)

NOTICE: When Government drawings, specifications, or other data are used for any purpose other than in connection with a definitely related Government procurement operation, the United States Government thereby incurs no responsibility nor obligation whatsoever; and the fact that the Government may have formulated, furnished, or in any way supplied the said drawings, specifications or other data is not to be regarded by implication or otherwise as in any manner licensing the holder or any other person or corporation, or conveying any rights or permission to manufacture, use, or sell any patented invention that may in any way be related thereto.

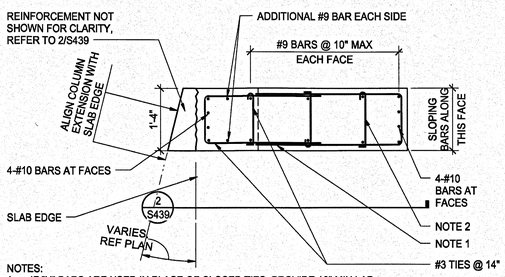

NOTES:
1. IF "U" BARS ARE USED IN PLACE OF CLOSED TIES, PROVIDE 16" MIN LAP.
2. WHERE CLEAR SPACING BETWEEN VERTICAL BARS EXCEEDS 6", PROVIDE CROSS TIES AT EVERY VERTICAL BAR AS SHOWN, OTHERWISE PROVIDE CROSS TIES AT EVERY OTHER VERTICAL BAR.
3. DOWEL BARS NOT SHOWN FOR CLARITY.

SECTION AT BASE OF TAPERED COLUMN 1
3/4" = 1'-0"

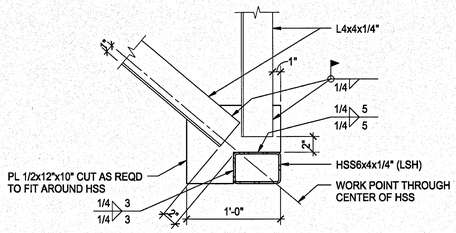

CURTAIN WALL CONNECTION 3
1 1/2" = 1'-0"

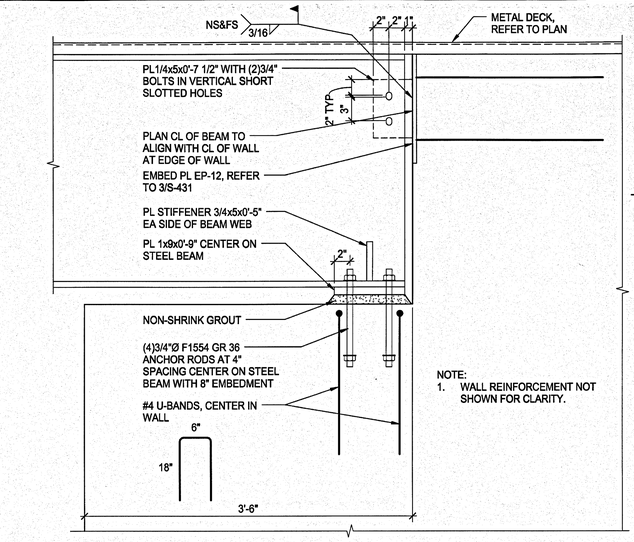

NOTE:
1. WALL REINFORCEMENT NOT SHOWN FOR CLARITY.

PENTHOUSE ROOF BEARING AT WALL 6
1 1/2" = 1'-0"

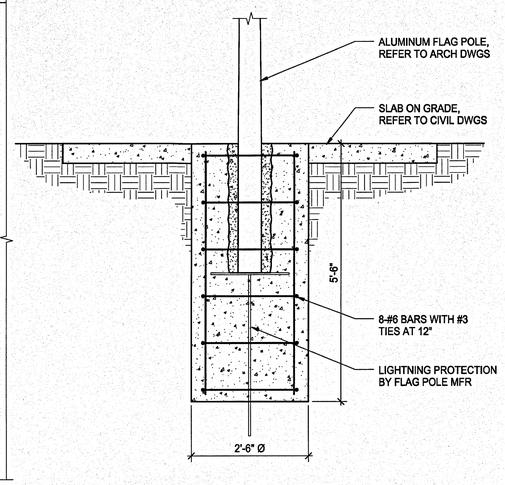

FLAG POLE FOUNDATION 9
3/4" = 1'-0"

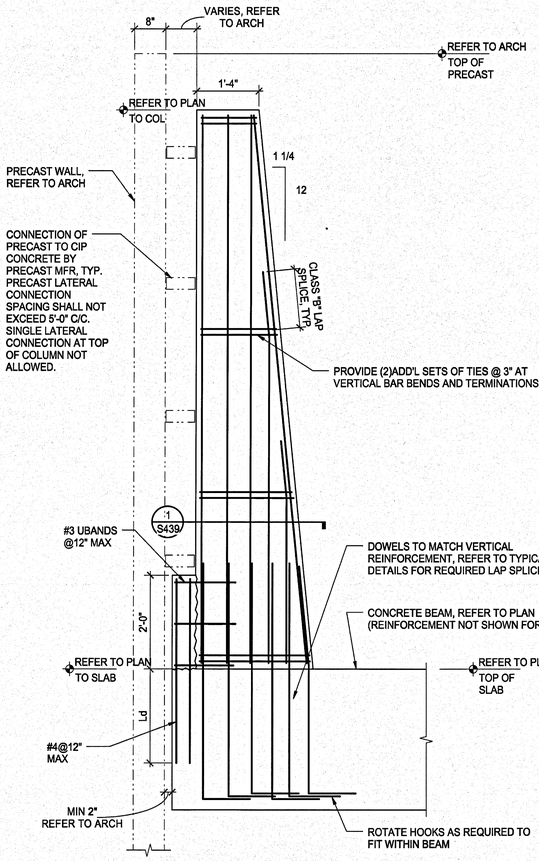

TYPICAL TAPARED COLUMN ELEVATION 2
3/4" = 1'-0"

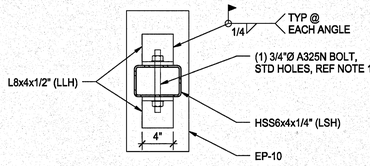

NOTE:
1. AT SIM, USE SHORT-SLOTTED HOLES WITH SLOTS PARALLEL TO BEAM AXIS.

CURTAIN WALL CONNECTION DETAIL 4
1 1/2" = 1'-0"

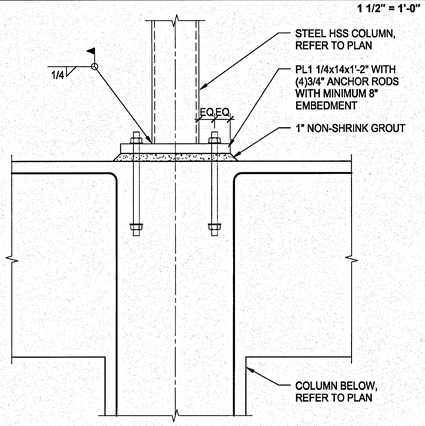

NOTE:
1. BEAM REINFORCEMENT AND COLUMN TIES NOT SHOWN FOR CLARITY.
2. AT SIM BASE PL 3/4" THICK.

ROOF COLUMN BASE 7
1 1/2" = 1'-0"

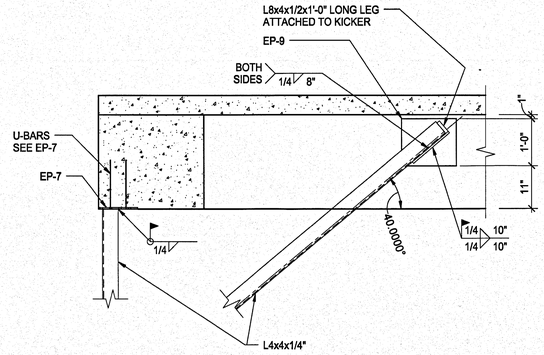

KICKER/ HANGER FRAMING DETAIL 5
3/4" = 1'-0"

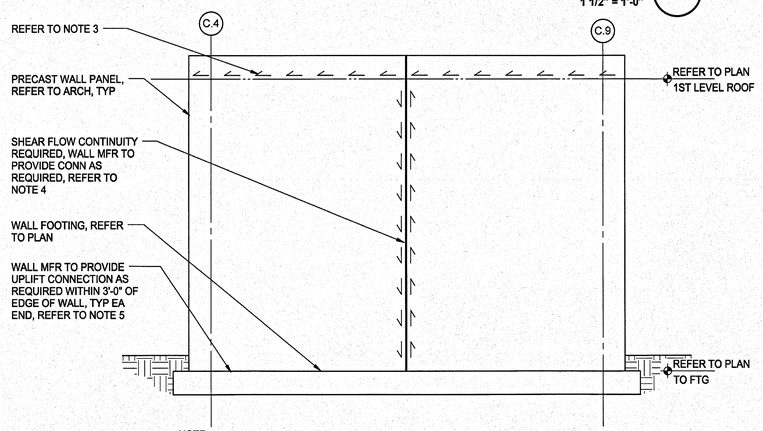

NOTE:
1. INTERSECTING WALLS NOT SHOWN FOR CLARITY.
2. WALL SHALL BE DESIGNED TO RESIST LOADS IN DIRECTION INDICATED AND OPP DIRECTION.
3. ULTIMATE WIND LOAD OF 1000 LB/FT 1ST LEVEL ROOF FOR FULL LENGTH OF WALLS SHOWN.
4. ULTIMATE WIND LOAD OF 200 LB/FT ALONG FULL HEIGHT OF WALL JOINT AS SHOWN.
5. ULTIMATE WIND LOAD OF 20K AT EA UPLIFT CONN AS NOTED.

PRECAST SHEAR WALL - LOW ROOF 8
1/4" = 1'-0"

S439

SYM	ZONE		DATE	APPROVED
		REVISIONS		

WALTER P MOORE
WALTER P. MOORE AND ASSOCIATES, INC.
300 SOUTH ORANGE AVENUE, SUITE 1180
ORLANDO, FLORIDA 32801.3932
PHONE: 407.418.2218 FAX: 407.418.2257
CERTIFICATE OF AUTHORIZATION NO. 3818
507-11003-00
JAIME E. VASQUEZ P.E. NO. 49103
TO THE BEST OF THE ENGINEER'S KNOWLEDGE, THE PLANS AND SPECIFICATIONS COMPLY WITH THE APPLICABLE MINIMUM BUILDING CODES

SIGNATURES	DATE
DRAWN ANDREW MYERS	12.18.13
CHECKED JAIME E. VASQUEZ	12.18.13
SUBMITTED: ARCHIVE OF RECORD JAIME E. VASQUEZ	12.18.13
ST of LICENSURE: FL LICENSE NO: 49103	
APPROVED JOSEPH M. MILES	12/18/13
BRUCE KINNAIRD	12/18/13

NATIONAL AERONAUTICS AND SPACE ADMINISTRATION
JOHN F. KENNEDY SPACE CENTER, NASA
KENNEDY SPACE CENTER, FLORIDA

KSC CENTRAL CAMPUS
REPLACEMENT HEADQUARTERS BUILDING
PHASE 1
VOL. 1 OF 4

FRAMING SECTIONS AND DETAILS

FILE NO.	SIZE	DWG. NO.
C-12070.00	F	79K39622 VOL 1
PCN. NO. 98745.1a		SHEET 165

NOTICE: When Government drawings, specifications, or other data are used for any purpose other than in connection with a definitely related Government procurement operation, the United States Government thereby incurs no responsibility nor obligation whatsoever; and the fact that the Government may have formulated, furnished, or in any way supplied the said drawings, specifications or other data is not to be regarded by implication or otherwise as in any manner licensing the holder or any other person or corporation, or conveying any rights or permission to manufacture, use, or sell any patented invention that may in any way be related thereto.

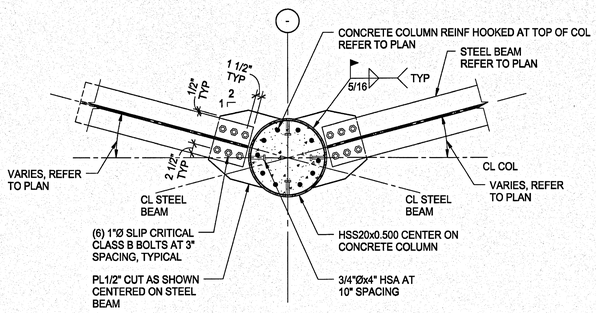

COLUMN COLLAR CONNECTION (LOWER) 1
3/4" = 1'-0"

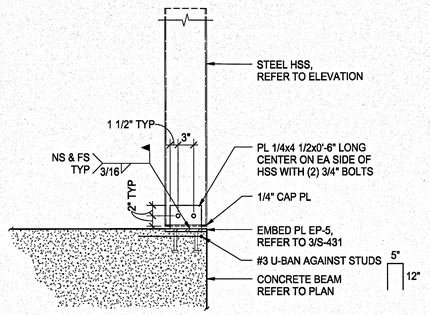

PRECAST COLUMN BRACE 4
1" = 1'-0"

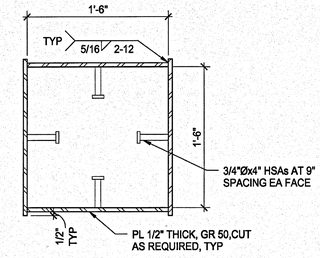

18" SQUARE BUILT-UP HSS 7
1 1/2" = 1'-0"

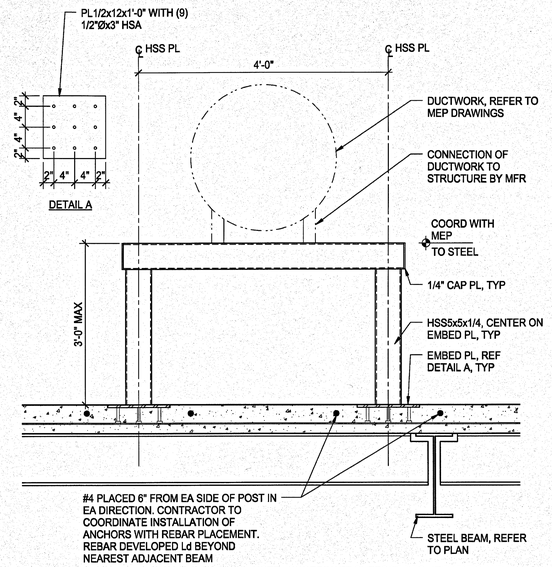

NOTE: COORDINATE SUPPORT REQUIREMENTS AND LOCATIONS WITH MEP DWGS AND EQUIPMENT MANUFACTURERS PRIOR TO INSTALLATION OF REBAR AND POST-INSTALLED ANCHORS REQD FOR SUPPORT.

DUCTWORK SUPPORT 10
1" = 1'-0"

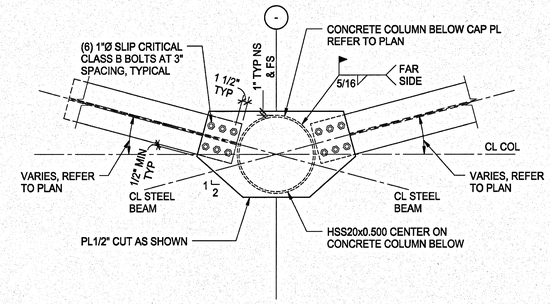

NOTE:
1. METAL DECK NOT SHOWN FOR CLARITY.

COLUMN COLLAR CONNECTION (UPPER) 2
3/4" = 1'-0"

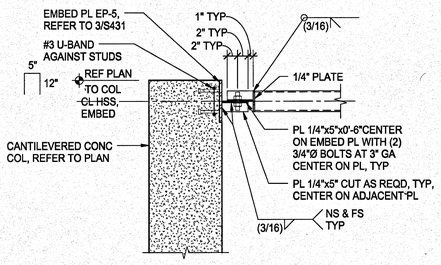

NOTE:
1.COLUMN REINFORCEMENT NOT SHOWN FOR CLARITY.

PRECAST BEAM BRACE 5
1" = 1'-0"

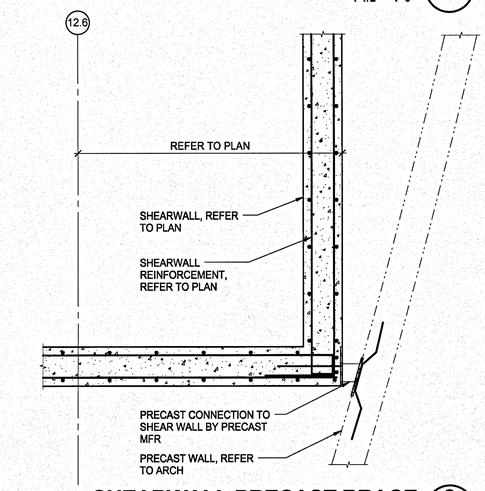

SHEARWALL PRECAST BRACE 8
NO SCALE

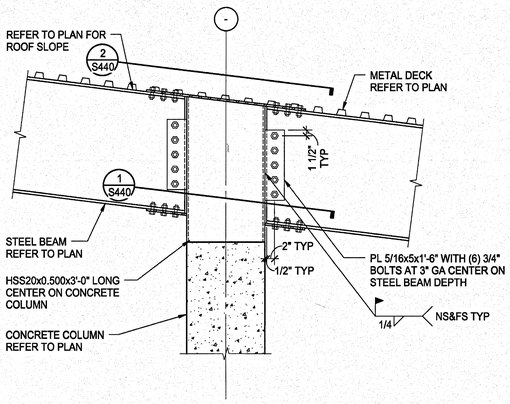

COLUMN COLLAR CONNECTION 3
3/4" = 1'-0"

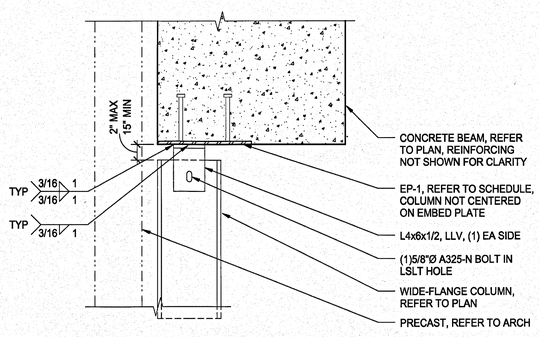

WIDE FLANGE COLUMN CONNECTION DETAIL 6
1 1/2" = 1'-0"

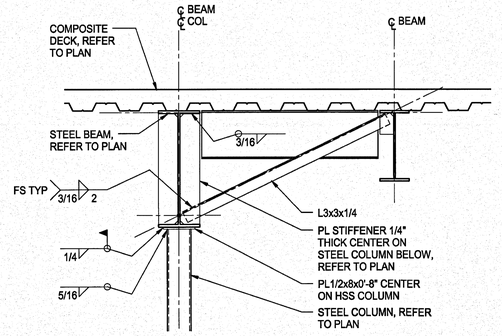

STEEL BEAM BRACE AT HSS COL 9
3/4" = 1'-0"

SYM	ZONE		DATE	APPROVED

REVISIONS

WALTER P MOORE
WALTER P. MOORE AND ASSOCIATES, INC.
800 SOUTH ORANGE AVENUE, SUITE 100
ORLANDO, FLORIDA 32801.3382
PHONE: 407.418.2218 FAX: 407.418.2267
CERTIFICATE OF AUTHORIZATION NO. 3818
SEI-1100-00
JAIME E. VASQUEZ P.E. NO. 49103
TO THE BEST OF THE ENGINEER'S KNOWLEDGE, THE PLANS AND SPECIFICATIONS COMPLY WITH THE APPLICABLE MINIMUM BUILDING CODES

SIGNATURES	DATE
DRAWN ANDREW MYERS	12.18.13
CHECKED JAIME E. VASQUEZ	12.18.13
SUBMITTED, ARCHITECT OF RECORD JAIME E. VASQUEZ	12.18.13
ST of LICENSURE: FL LICENSE NO: 49103	
APPROVED JOSEPH M. ALES	12.18.13
BRUCE KINNAIRD	12/18/13

NATIONAL AERONAUTICS AND SPACE ADMINISTRATION
JOHN F. KENNEDY SPACE CENTER, NASA
KENNEDY SPACE CENTER, FLORIDA

KSC CENTRAL CAMPUS
REPLACEMENT HEADQUARTERS BUILDING
PHASE 1
VOL. 1 OF 4

FRAMING SECTIONS AND DETAILS

FILE NO.	SIZE	DWG. NO.
C-12070.00	F	79K39622 VOL 1

PCN. NO. 98745.1a | SHEET 166

S440

KSC FORM 1-11 (3/78)(C/G 3/94)

NOTICE: When Government drawings, specifications, or other data are used for any purpose other than in connection with a definitely related Government procurement operation, the United States Government thereby incurs no responsibility nor obligation whatsoever; and the fact that the Government may have formulated, furnished, or in any way supplied the said drawings, specifications or other data is not to be regarded by implication or otherwise as in any manner licensing the holder or any other person or corporation, or conveying any rights or permission to manufacture, use, or sell any patented invention that may in any way be related thereto.

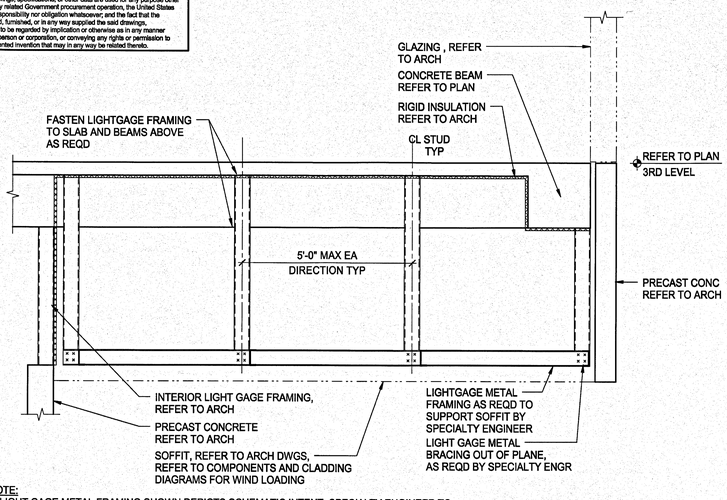

NOTE:
1. LIGHT GAGE METAL FRAMING SHOWN DEPICTS SCHEMATIC INTENT. SPECIALTY ENGINEER TO REVISE FRAMING AS NEEDED AND DESIGN FRAMING TO RESIST APPLIED LOADS AND PROVIDE STABILITY.

ALCOVE SOFFIT FRAMING 1
1/2" = 1'-0"

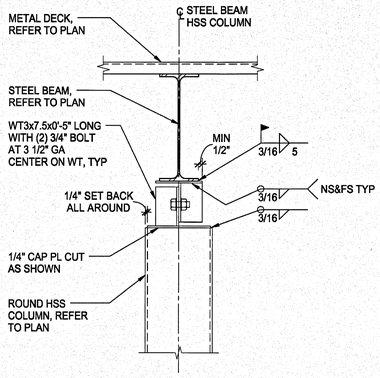

PIPE COLUMN CONNECTION AT ROOF 5
1 1/2" = 1'-0"

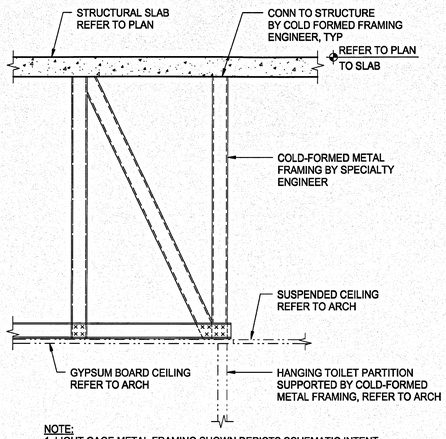

NOTE:
1. LIGHT GAGE METAL FRAMING SHOWN DEPICTS SCHEMATIC INTENT. SPECIALTY ENGINEER TO REVISE FRAMING AS NEEDED AND DESIGN FRAMING TO RESIST APPLIED LOADS AND PROVIDE STABILITY.

HANGING TOILET PARTITION SUPPORT 8
3/4" = 1'-0"

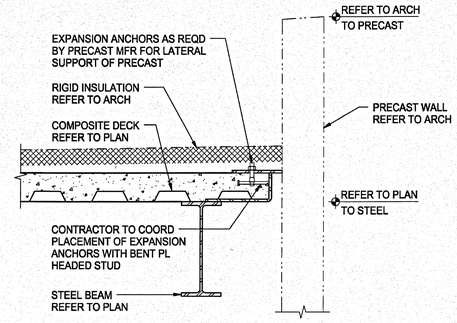

PRECAST SUPPORT TO LOW ROOF 11
1" = 1'-0"

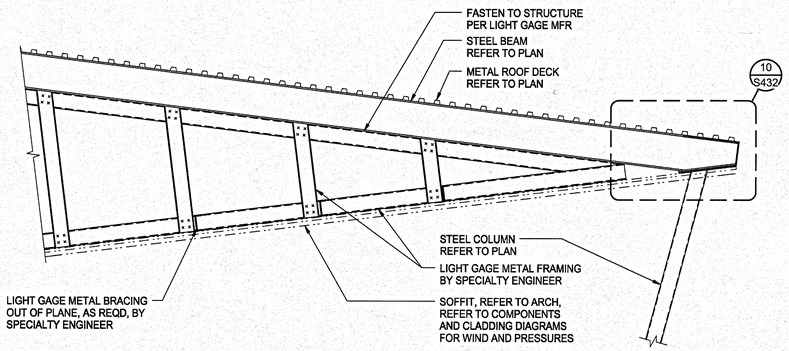

NOTE:
1. LIGHT GAGE METAL FRAMING SHOWN DEPICTS SCHEMATIC INTENT. SPECIALTY ENGINEER TO REVISE FRAMING AS NEEDED AND DESIGN FRAMING TO RESIST APPLIED LOADS AND PROVIDE STABILITY.

CAFETERIA SOFFIT FRAMING 2
1/2" = 1'-0"

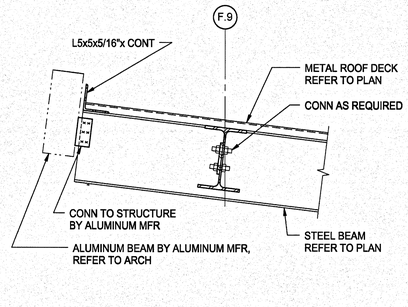

CAFETERIA ROOF DECK EDGE SUPPORT 6
1" = 1'-0"

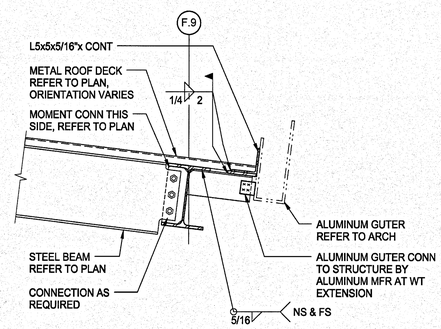

CAFETERIA ROOF DECK EDGE SUPPORT 9
1" = 1'-0"

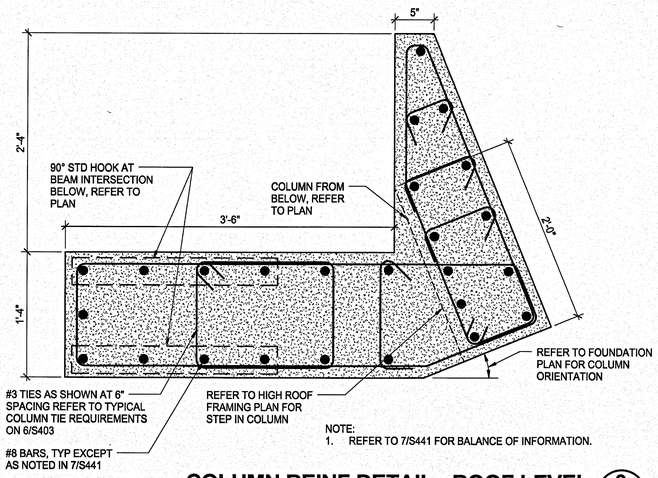

NOTE:
1. REFER TO 7/S441 FOR BALANCE OF INFORMATION.

COLUMN REINF DETAIL - ROOF LEVEL 3
1 1/2" = 1'-0"

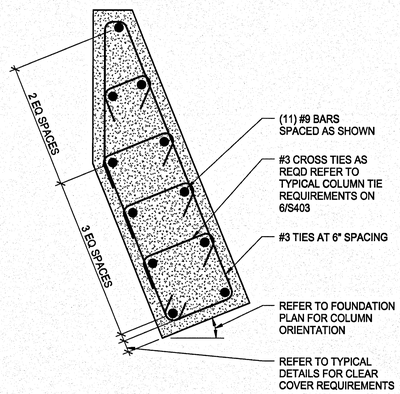

COLUMN REINF DETAIL - FND TO 7TH LEVEL 7
1 1/2" = 1'-0"

SYM	ZONE		DATE	APPROVED
		REVISIONS		

WALTER P MOORE
WALTER P. MOORE AND ASSOCIATES, INC.
800 SOUTH ORANGE AVENUE, SUITE 1180
ORLANDO, FLORIDA 32801-3332
PHONE: 407.418.2218 FAX: 407.418.2267
CERTIFICATE OF AUTHORIZATION NO. 3818
JAIME E. VASQUEZ P.E. NO. 49103
TO THE BEST OF THE ENGINEER'S KNOWLEDGE, THE PLANS AND SPECIFICATIONS COMPLY WITH THE APPLICABLE MINIMUM BUILDING CODES

SIGNATURES	DATE
DRAWN ANDREW MYERS	12.18.13
CHECKED JAIME E. VASQUEZ	12.18.13
SUBMITTED: ARCHITECT OF RECORD JAIME E. VASQUEZ	12.18.13
ST of LICENSURE: FL LICENSE NO: 49103	
APPROVED JOSEPH M. ALES	12-18-13
BRUCE KINNAIRD	12/18/13

NATIONAL AERONAUTICS AND SPACE ADMINISTRATION
JOHN F. KENNEDY SPACE CENTER, NASA
KENNEDY SPACE CENTER, FLORIDA

KSC CENTRAL CAMPUS
REPLACEMENT HEADQUARTERS BUILDING
PHASE 1
VOL. 1 OF 4

FRAMING SECTIONS AND DETAILS

S441

FILE NO.	SIZE	DWG. NO.
C-12070.00	F	79K39622 VOL 1

PCN. NO. 98745.1a | SHEET 167

NOTICE: When Government drawings, specifications, or other data are used for any purpose other than in connection with a definitely related Government procurement operation, the United States Government thereby incurs no responsibility nor obligation whatsoever; and the fact that the Government may have formulated, furnished, or in any way supplied the said drawings, specifications or other data is not to be regarded by implication or otherwise as in any manner licensing the holder or any other person or corporation, or conveying any rights or permission to manufacture, use, or sell any patented invention that may in any way be related thereto.

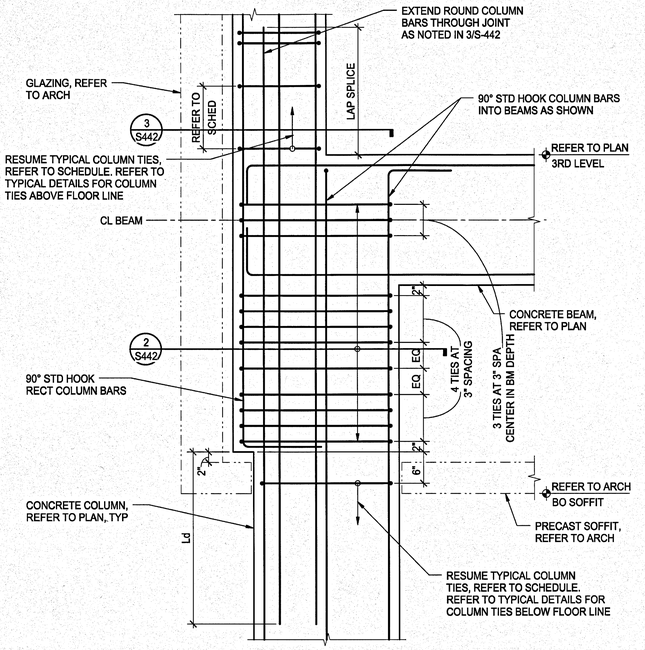

ROUND COLUMN TRANSITION (LEVEL 3) 1
1" = 1'-0"

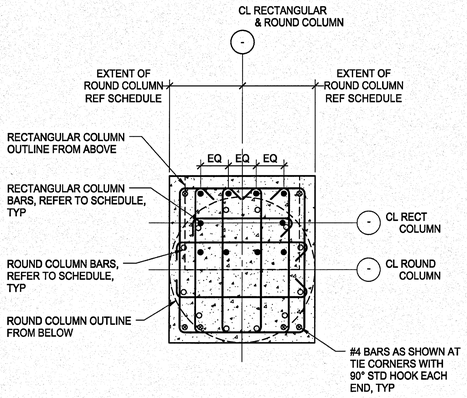

ROUND/RECT COLUMN TRANSFER 2
1" = 1'-0"

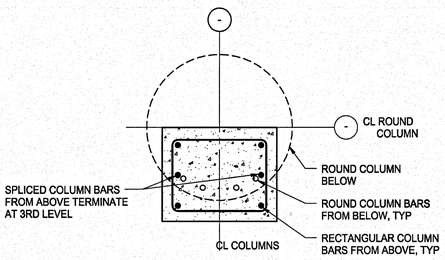

NOTE:
REFER TO COLUMN SCHEDULE AND TYPICAL DETAILS FOR BALANCE OF INFORMATION.

LAP SPLICE ABOVE FLOOR LINE 3
1" = 1'-0"

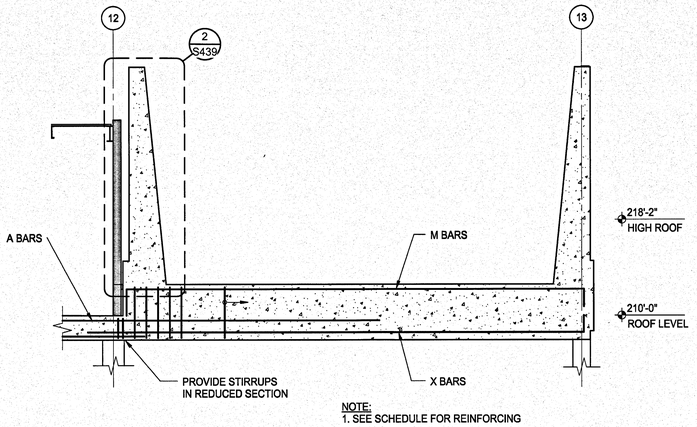

NOTE:
1. SEE SCHEDULE FOR REINFORCING

HIGH ROOF STEP 4
3/16" = 1'-0"

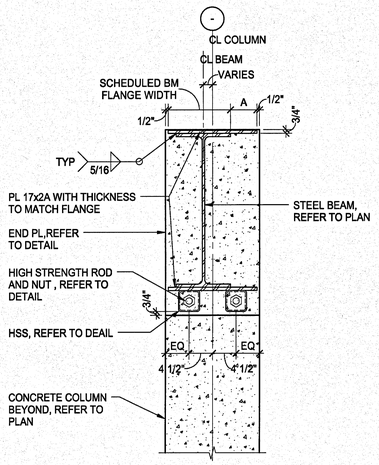

SQUARE COLUMN MOMENT DETAIL 5
1" = 1'-0"

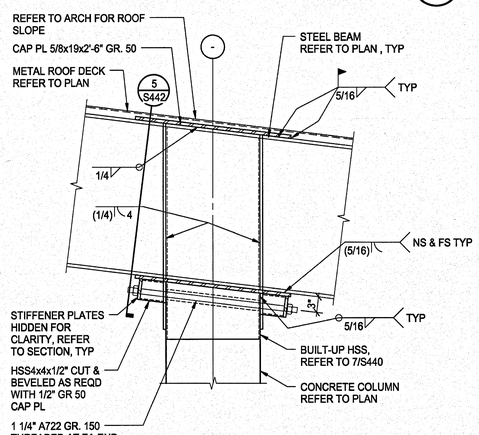

SQUARE COLUMN/BEAM MOMENT CONNECTION 6
1" = 1'-0"

SYM	ZONE	REVISIONS	DATE APPROVED

WALTER P MOORE
WALTER P. MOORE AND ASSOCIATES, INC.
300 SOUTH ORANGE AVENUE, SUITE 1100
ORLANDO, FLORIDA 32801.3832
PHONE: 407.418.2218 FAX: 407.418.2267
CERTIFICATE OF AUTHORIZATION NO. 3818
007-111003-00
JAIME E. VASQUEZ, P.E. NO. 49103
TO THE BEST OF THE ENGINEER'S KNOWLEDGE, THE PLANS AND SPECIFICATIONS COMPLY WITH THE APPLICABLE MINIMUM BUILDING CODES

SIGNATURES	DATE
DRAWN	
ANDREW MYERS	12.18.13
CHECKED	
JAIME E. VASQUEZ	12.18.13
SUBMITTED, APPROVING OF RECORD	
JAIME E. VASQUEZ	12.18.13
ST of LICENSURE: FL	
LICENSE NO: 49103	
APPROVED	
JOSEPH M. ALES	12.18.13
BRUCE KINNAIRD	12/18/13

NATIONAL AERONAUTICS AND SPACE ADMINISTRATION
JOHN F. KENNEDY SPACE CENTER, NASA
KENNEDY SPACE CENTER, FLORIDA

KSC CENTRAL CAMPUS
REPLACEMENT HEADQUARTERS BUILDING
PHASE 1
VOL. 1 OF 4

FRAMING SECTIONS AND DETAILS

S442	FILE NO. C-12070.00	SIZE F	DWG. NO. 79K39622 VOL 1	
	PCN. NO. 98745.1a		SHEET 168	

KSC FORM 1-11 (3/76)(C/G 3/94)

NOTICE: When Government drawings, specifications, or other data are used for any purpose other than in connection with a definitely related Government procurement operation, the United States Government thereby incurs no responsibility nor obligation whatsoever; and the fact that the Government may have formulated, furnished, or in any way supplied the said drawings, specifications or other data is not to be regarded by implication or otherwise as in any manner licensing the holder or any other person or corporation, or conveying any rights or permission to manufacture, use, or sell any patented invention that may in any way be related thereto.

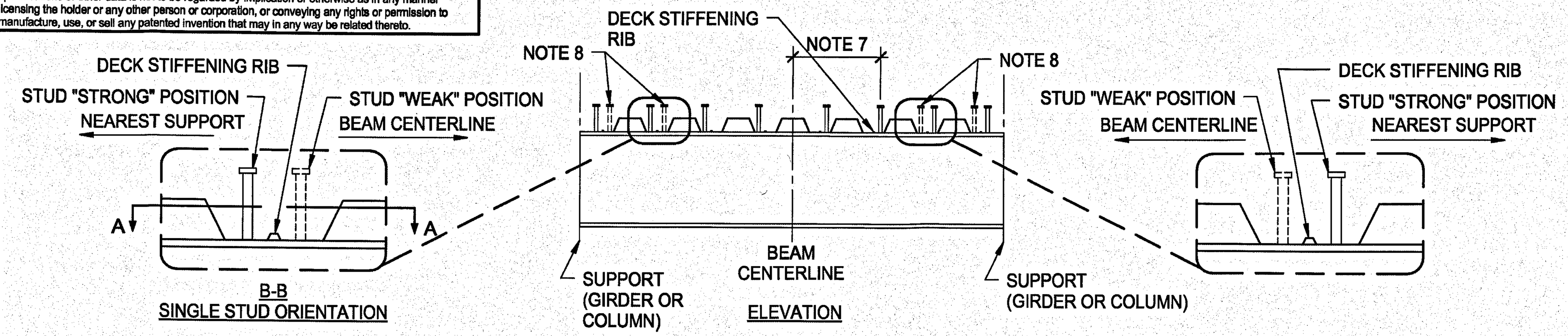

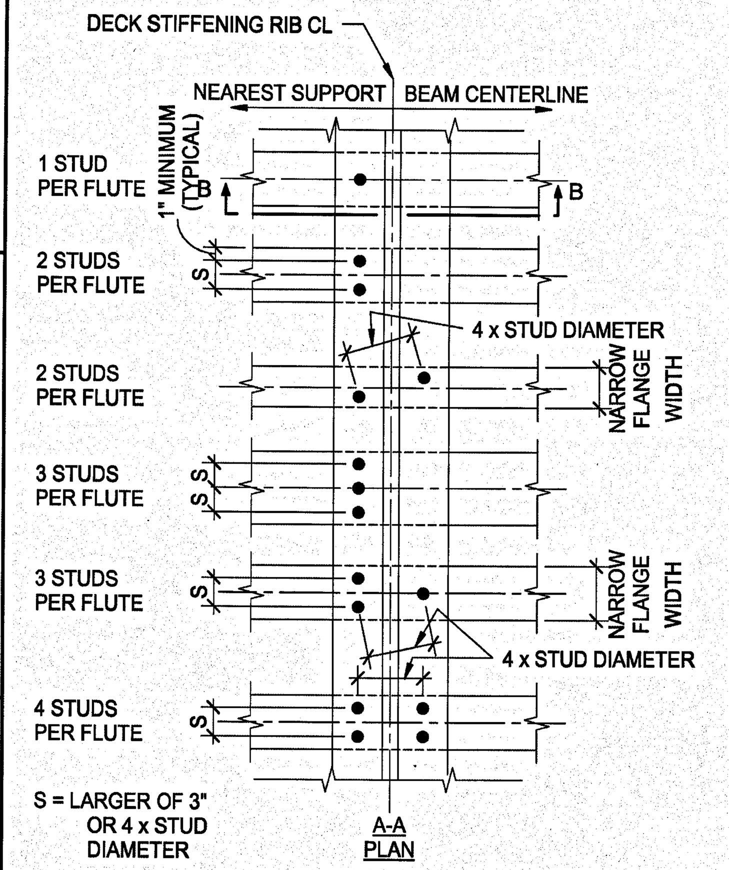

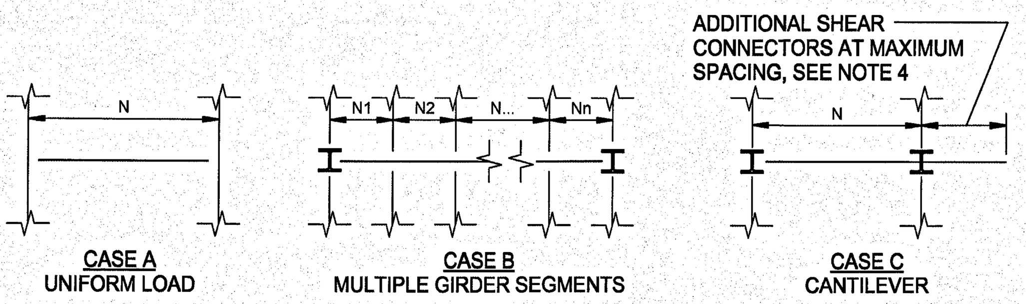

NOTES:
1. N = NUMBER OF SHEAR CONNECTORS SPECIFIED ON PLAN. SHEAR CONNECTORS SHALL BE DISTRIBUTED ALONG THE LENGTH OF THE BEAM AS SHOWN IN CASES A THROUGH C.
2. REFER TO GENERAL NOTES FOR PLAN NOTATION.
3. REFER TO GENERAL NOTES FOR SHEAR CONNECTOR DIAMETER AND LENGTH.
4. MAXIMUM SPACING OF SHEAR CONNECTORS SHALL BE AS FOLLOWS:
   a. BEAMS PERPENDICULAR TO DECK SPAN: SMALLER OF 36" OR 8 TIMES TOTAL SLAB THICKNESS
   b. BEAMS PARALLEL TO DECK SPAN: 8 TIMES TOTAL SLAB THICKNESS
5. WHERE THE SPECIFIED NUMBER OF SHEAR CONNECTORS IS LESS THAN THE BEAM SPAN LENGTH DIVIDED BY THE MAXIMUM SPACING (SEE NOTE 4), ADDITIONAL SHEAR CONNECTORS SHALL BE PROVIDED SUCH THAT THE MAXIMUM SPACING IS NOT EXCEEDED AT ANY LOCATION IN THE SPAN.
6. WHERE STEEL DECK CORRUGATIONS DO NOT ALLOW FOR AN EVEN SPACING OF SHEAR CONNECTORS WITH ONE STUD IN EACH FLUTE, ADDITIONAL STUDS IN A SECOND ROW (OR THIRD ROW WHERE REQUIRED) SHALL BE PLACED SUCH THAT THE HIGHEST DENSITY OF SHEAR CONNECTORS OCCURS NEAR THE BEAM SUPPORT.
7. EACH SHEAR CONNECTOR TO BE PLACED IN "STRONG" POSITION (FURTHEST FROM BEAM CENTERLINE).
8. SHEAR CONNECTORS MAY ONLY BE PLACED IN "WEAK" POSITION WHEN THERE ARE MULTIPLE STUDS PER FLUTE. REFER TO PLAN VIEW AT LEFT FOR PERMISSIBLE CONFIGURATIONS.

SHEAR CONNECTORS HAVE HIGHEST CAPACITIES WHEN PLACED AS SHOWN. IF STUDS ARE NOT PLACED PER THIS DETAIL, 25% MORE STUDS MUST BE INSTALLED. EQUALLY SPACE ADDITIONAL STUDS ALONG THE BEAM.

TYPICAL SHEAR CONNECTOR PLACEMENT DIAGRAMS - STUDS IN "STRONG" POSITION (1)

NO SCALE

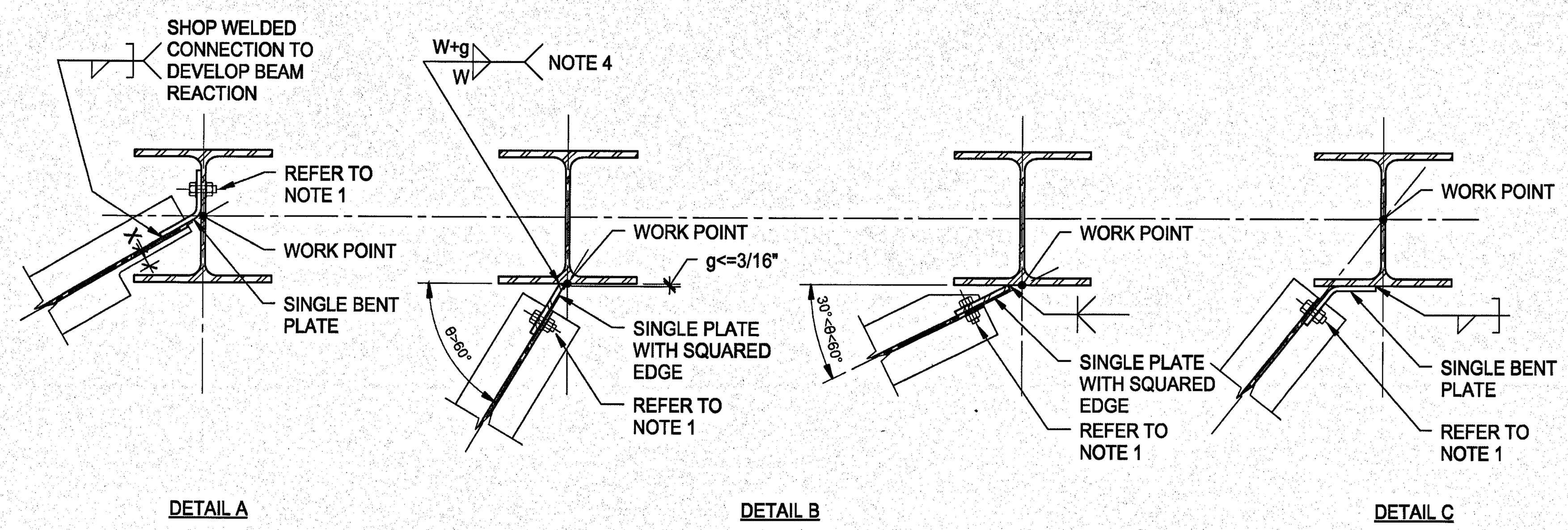

NOTES:
1. SNUG-TIGHTENED BOLTED CONNECTION USING A325 BOLTS IN HORIZONTAL SHORT-SLOTTED HOLES. RESISTANCE BY BOLTS TOSHEAR SHALL BE BY SHEAR/BEARING.
2. FABRICATOR SHALL ASSUME WORKPOINT TO BE LOCATED AT CENTERLINE OF COLUMN FOR VALUES OF X >= 1" AND PROVIDE CONNECTION AS SPECIFIED IN DETAIL A. FABRICATOR SHALL ASSUME LOCATION OF WORKPOINT TO BE AT COLUMN FLANGE-WEB INTERSECTION AND PROVIDE CONNECTION AS SPECIFIED IN DETAIL B WHERE CLEARANCE DOES NOT EXIST FOR DETAIL A TO APPLY. FABRICATOR SHALL APPLY DETAIL C ONLY WHEN LOCATION OF WORKPOINT MUST BE LOCATED AT COLUMN CENTERLINE AND CLEARANCE DOES NOT EXIST FOR DETAIL A TO APPLY. LOCATION OF WORKPOINTS SHALL BE APPROVED BY THE ENGINEER PRIOR TO SHOP DRAWING SUBMITTAL. DETAIL C SHALL NOT BE USED FOR LOADS GREATER THAN 40K.
3. SINGLE PLATE CONNECTION MAY BE USED ONLY WHERE WORKPOINT IS AT INTERSECTION OF COLUMN FLANGE AND WEB.
4. SINGLE BENT PLATES SHALL BE DESIGNED FOLLOWING PROCEDURES OUTLINED IN THE AMERICAN INSTITUTE OF STEEL CONSTRUCTION MANUAL. MINIMUM FILLET WELD SIZE, W, SHALL BE 5/8 TIMES THE PLATE THICKNESS.
5. REFER TO SPECIFICATIONS FOR CONNECTION DESIGN CRITERIA.

TYPICAL SKEWED SHEAR CONNECTION AT COLUMN (2)

NO SCALE

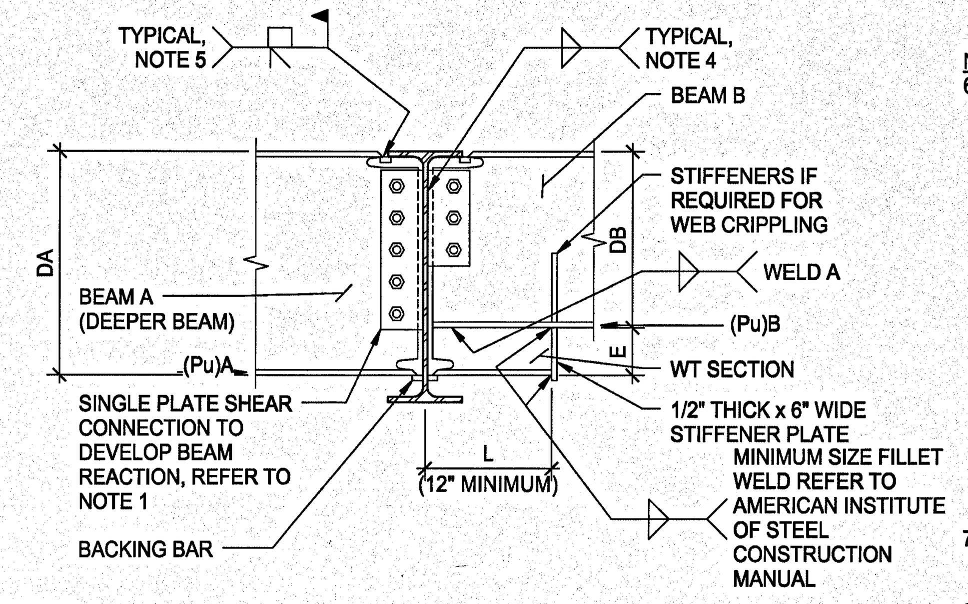

NOTES:
1. BOLTS IN WEB CONNECTION MAY BE SNUG-TIGHTENED OR PRETENSIONED A325 OR A490 BOLTS WITH HORIZONTAL SHORT-SLOTTED HOLES IN PLATE. IF BOLTS ARE TO BE PRETENSIONED, SNUG-TIGHTEN BOLTS PRIOR TO WELDING FLANGES AND PRETENSION AFTER WELDING FLANGES.
2. REFER TO SPECIFICATIONS FOR CONNECTION DESIGN CRITERIA.
3. PROVIDE PREDESIGNED SHEAR CONNECTIONS AS SHOWN IN AMERICAN INSTITUTE OF STEEL CONSTRUCTION MANUAL WHERE APPLICABLE.
4. MINIMUM FILLET WELD SIZE FOR SINGLE PLATE SHEAR CONNECTIONS SHALL BE 5/8 TIMES THE PLATE THICKNESS.
5. IF MOMENT IS SHOWN ON DRAWINGS, PARTIAL PENETRATION WELD TO DEVELOP MOMENT CAN BE USED IN LIEU OF COMPLETE JOINT PENETRATION WELD.

NOTES CONTINUED:

6. IF MOMENT IS INDICATED ON DRAWINGS:

$$(Pu)_A = \frac{(Mu)_A}{0.95D_A} \quad \text{AND} \quad (Pu)_B = \frac{(Mu)_B}{0.95D_B}$$

IF MOMENT IS NOT SHOWN:

$$(Pu)_A = \frac{0.9FyZx_A}{0.95D_A} \quad \text{AND} \quad (Pu)_B = \frac{0.9FyZx_B}{0.95D_B}$$

Pu = MINIMUM OF $(Pu)_A$ AND $(Pu)_B$ (KIPS).

WHERE: Fy = YIELD STRENGTH OF BEAM (KSI).
Zx_A, Zx_B = PLASTIC MODULUS OF BEAM (IN^3).
D_A, D_B = DEPTH OF BEAM (INCHES).
E = ECCENTRICITY (INCHES).

7. WELD A SHALL BE DESIGNED TO DEVELOP THE FOLLOWING FORCES:
   a. SHEAR: $V = Pu$ (KIPS).
   b. MOMENT: $M = Pu \times E$ (KIP-INCHES).
8. FLANGE THICKNESS AND WIDTH OF WT SECTION SHALL BE EQUAL TO OR LARGER THAN THAT OF DEEPER BEAM.
9. YIELD STRENGTH OF WT SHALL BE THE SAME AS THAT OF DEEPER BEAM.
10. WEB OF BEAM B SHALL BE INVESTIGATED FOR WEB CRIPPLING AND REINFORCED IF REQUIRED.
11. WT SECTION WEB SHALL BE DESIGNED TO DEVELOP MOMENT M AND SHEAR V DEFINED IN NOTE 7 ABOVE AS FOLLOWS:

$$L = \sqrt{\frac{4M}{0.9Fyt_s}} \text{ (INCHES)}$$

$$L = \frac{V}{0.54Fyt_s} \text{ (INCHES)}$$

WHERE t_s = WT STEM THICKNESS (INCHES).
L = WT LENGTH (INCHES).
L SHALL BE TAKEN AS THE LARGER VALUE OF THE TWO EQUATIONS ABOVE BUT SHALL NOT BE LESS THAN 12 INCHES.

TYPICAL BEAM-TO-BEAM MOMENT CONNECTION (3)

05120-CN-BMBM-07
© COPYRIGHT WALTER P. MOORE AND ASSOCIATES, INC. 2013

NO SCALE

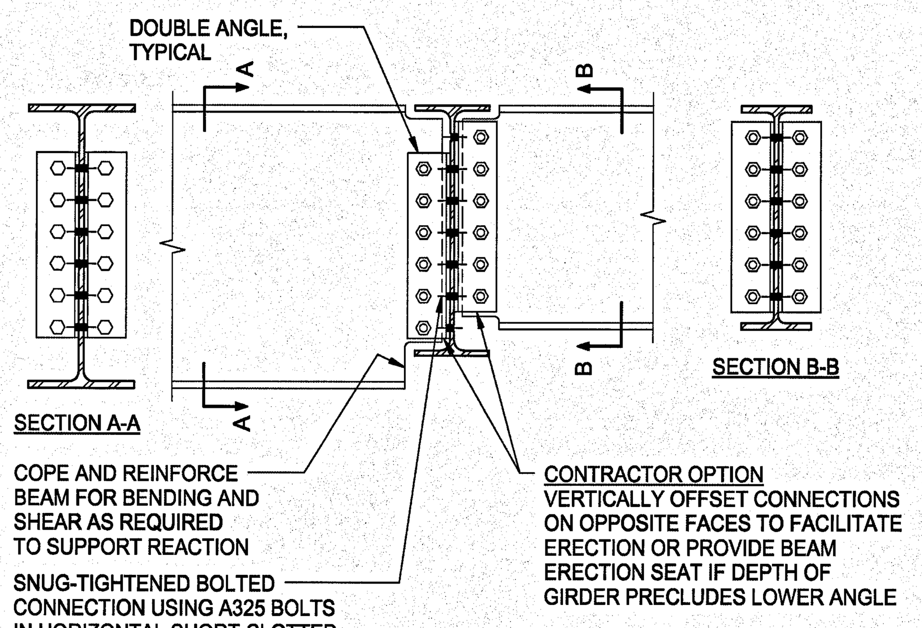

NOTES:
1. REFER TO SPECIFICATIONS FOR CONNECTION DESIGN CRITERIA.
2. PROVIDE PREDESIGNED SHEAR CONNECTIONS AS SHOWN IN AMERICAN INSTITUTE OF STEEL CONSTRUCTION MANUAL WHERE APPLICABLE.

TYPICAL BEAM-TO-BEAM SHEAR CONNECTION (4)

NO SCALE

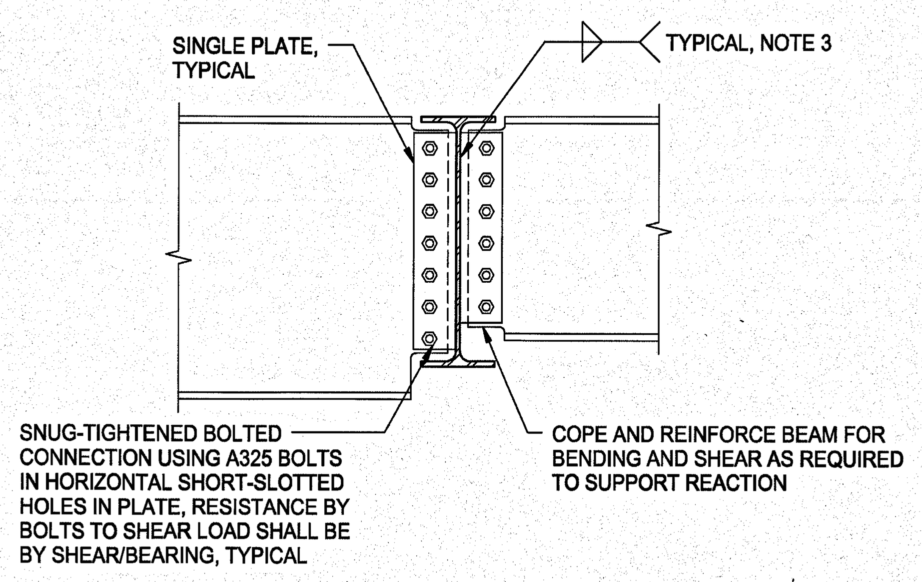

NOTES:
1. REFER TO SPECIFICATIONS FOR CONNECTION DESIGN CRITERIA.
2. PROVIDE PREDESIGNED SHEAR CONNECTIONS AS SHOWN IN AMERICAN INSTITUTE OF STEEL CONSTRUCTION MANUAL WHERE APPLICABLE.
3. MINIMUM FILLET WELD SIZE SHALL BE 5/8 TIMES THE PLATE THICKNESS.

TYPICAL BEAM-TO-BEAM SHEAR CONNECTION (5)

NO SCALE

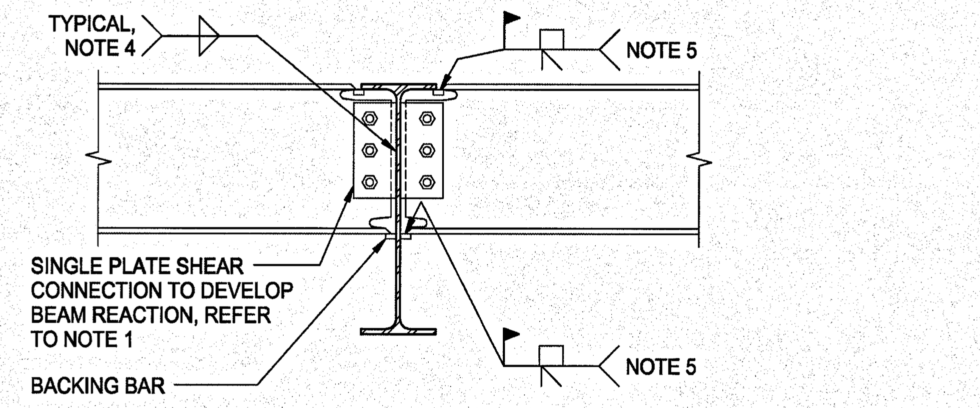

NOTES:
1. BOLTS IN WEB CONNECTION MAY BE SNUG-TIGHTENED OR PRETENSIONED A325 OR A490 BOLTS WITH HORIZONTAL SHORT-SLOTTED HOLES IN PLATE. IF BOLTS ARE TO BE PRETENSIONED, SNUG-TIGHTEN BOLTS PRIOR TO WELDING FLANGES AND PRETENSION AFTER WELDING FLANGES.
2. REFER TO SPECIFICATIONS FOR CONNECTION DESIGN CRITERIA.
3. PROVIDE PREDESIGNED SHEAR CONNECTIONS AS SHOWN IN AMERICAN INSTITUTE OF STEEL CONSTRUCTION LRFD MANUAL WHERE APPLICABLE.
4. MINIMUM FILLET WELD SIZE FOR SINGLE PLATE SHEAR CONNECTIONS SHALL BE 5/8 TIMES THE PLATE THICKNESS.
5. IF MOMENT IS SHOWN ON DRAWINGS, PARTIAL PENETRATION WELD TO DEVELOP MOMENT CAN BE USED IN LIEU OF COMPLETE JOINT PENETRATION WELD. FOR THIS CASE, WELD SHALL BE REQUIRED TO DEVELOP THE BEAM FLANGE FORCE COMPUTED AS FOLLOWS: $Pu = (Mu)/(0.95D)$,
WHERE: Mu = DESIGN MOMENT (KIP-FEET).
D = BEAM DEPTH (INCHES).
Pu = BEAM FLANGE FORCE (KIPS).

TYPICAL BEAM-TO-BEAM MOMENT CONNECTION (6)

05120-CN-BMBM-08
© COPYRIGHT WALTER P. MOORE AND ASSOCIATES, INC. 2013

NO SCALE

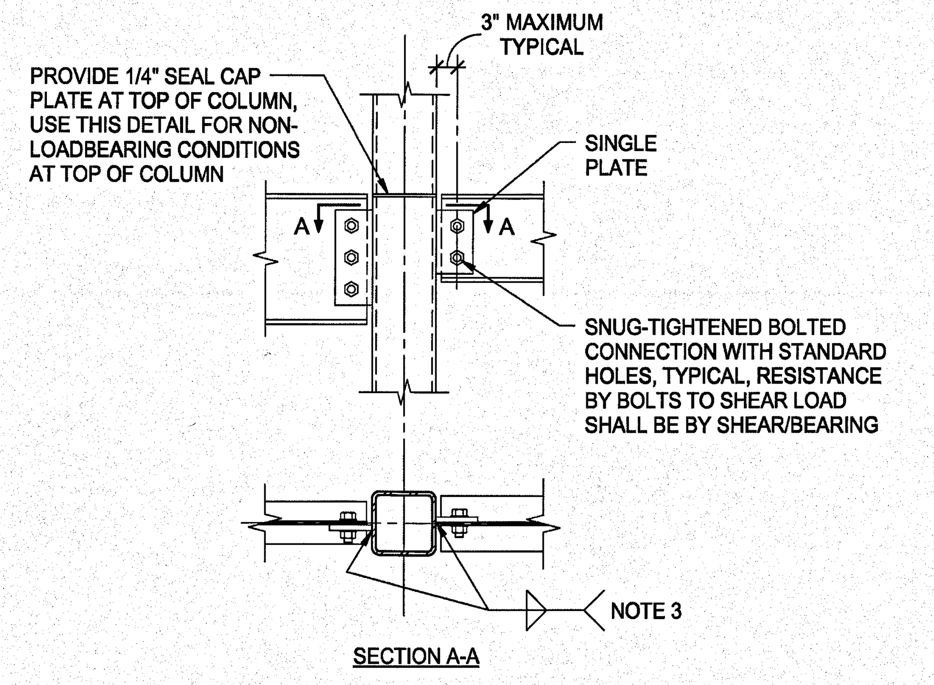

NOTES:
1. REFER TO SPECIFICATIONS FOR CONNECTION DESIGN CRITERIA.
2. REFER TO PLAN FOR CONNECTION DESIGN REACTIONS.
3. MINIMUM FILLET WELD SIZE SHALL BE 5/8 TIMES THE PLATE THICKNESS.

TYPICAL SHEAR CONNECTION AT RECTANGULAR/SQUARE HSS COLUMN (7)

NO SCALE

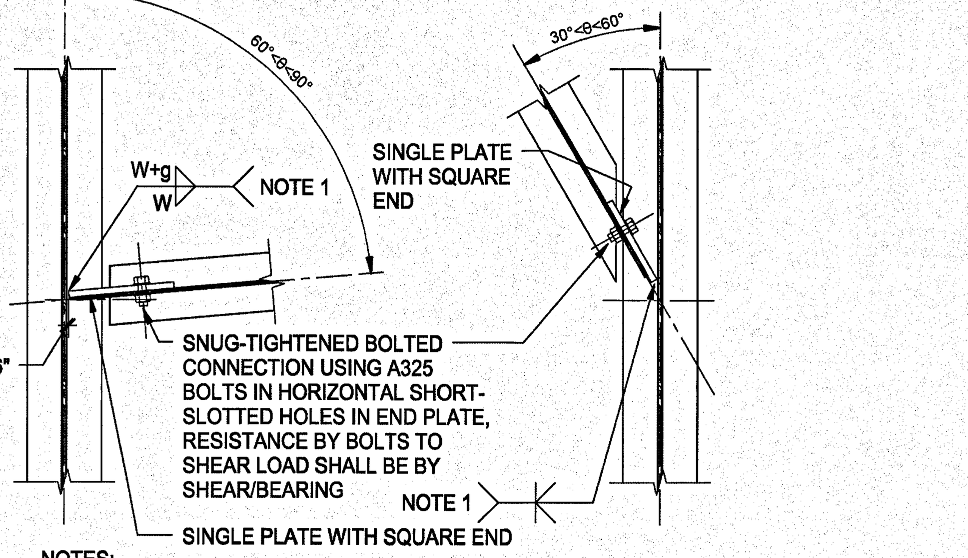

NOTES:
1. REFER TO AMERICAN INSTITUTE OF STEEL CONSTRUCTION MANUAL FOR SINGLE PLATE WELDING REQUIREMENTS. MINIMUM FILLET WELD SIZE, W, SHALL BE 5/8 TIMES THE PLATE THICKNESS.
2. REFER TO SPECIFICATIONS FOR CONNECTION DESIGN CRITERIA.

TYPICAL SKEWED BEAM-TO-BEAM SHEAR CONNECTION (8)

NO SCALE

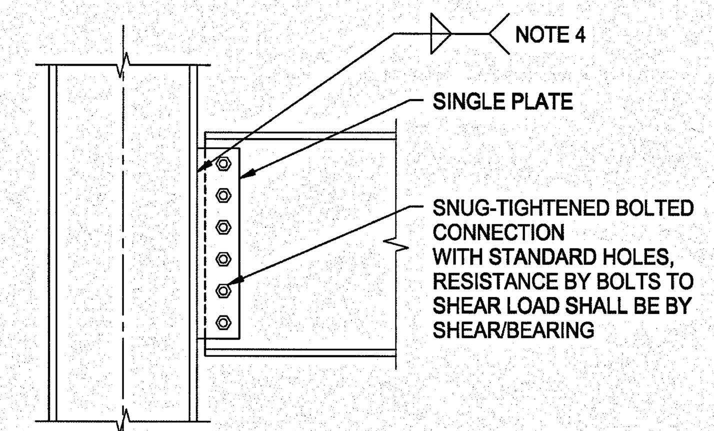

NOTES:
1. REFER TO SPECIFICATIONS FOR CONNECTION DESIGN CRITERIA.
2. REFER TO PLAN FOR CONNECTION DESIGN REACTIONS.
3. PROVIDE PREDESIGNED CONNECTIONS AS SHOWN IN AMERICAN INSTITUTE OF STEEL CONSTRUCTION MANUAL WHERE APPLICABLE.
4. MINIMUM FILLET WELD SIZE SHALL BE 5/8 TIMES THE PLATE THICKNESS.

TYPICAL SHEAR CONNECTION AT COLUMN FLANGE (9)

NO SCALE

SYM	ZONE		DATE	APPROVED

REVISIONS

WALTER P MOORE
WALTER P. MOORE AND ASSOCIATES, INC.
300 SOUTH ORANGE AVENUE, SUITE 1160
ORLANDO, FLORIDA 32801.3332
PHONE: 407.418.2218 FAX: 407.418.2257
CERTIFICATE OF AUTHORIZATION NO. 3818
S07-11023-00
JAIME E. VASQUEZ P.E. NO. 49103
TO THE BEST OF THE ENGINEER'S KNOWLEDGE, THE PLANS AND SPECIFICATIONS COMPLY WITH THE APPLICABLE MINIMUM BUILDING CODES

SIGNATURES	DATE
DRAWN ANDREW MYERS	12.18.13
CHECKED JAIME E. VASQUEZ	12.18.13
SUBMITTED: ARCH/ENG OF RECORD JAIME E. VASQUEZ	12.18.13
ST of LICENSURE: FL LICENSE NO: 49103	
APPROVED JOSEPH M. ALES	12.18.13
BRUCE KINNAIRD	12/18/13

NATIONAL AERONAUTICS AND SPACE ADMINISTRATION
JOHN F. KENNEDY SPACE CENTER, NASA
KENNEDY SPACE CENTER, FLORIDA

KSC CENTRAL CAMPUS
REPLACEMENT HEADQUARTERS BUILDING
PHASE 1
VOL. 1 OF 4

STEEL FRAMING TYPICAL DETAILS

FILE NO.	SIZE	DWG. NO.
C-12070.00	F	79K39622 VOL 1

PCN. NO. 98745.1a
SHEET 169

S501

NOTICE: When Government drawings, specifications, or other data are used for any purpose other than in connection with a definitely related Government procurement operation, the United States Government thereby incurs no responsibility nor obligation whatsoever; and the fact that the Government may have formulated, furnished, or in any way supplied the said drawings, specifications or other data is not to be regarded by implication or otherwise as in any manner licensing the holder or any other person or corporation, or conveying any rights or permission to manufacture, use, or sell any patented invention that may in any way be related thereto.

ROOF DECK FASTENING REQUIREMENTS:

1. UNLESS NOTED OTHERWISE, THE ATTACHMENT PATTERN FOR STEEL ROOF DECK TO STRUCTURAL STEEL SHALL BE A FOLLOWS:

   a. FASTENING OF DECK TO EACH SUPPORT MEMBER:

FASTENER	PATTERN
5/8" PUDDLE WELD	36/7

   b. FASTENING OF DECK TO SUPPORT MEMBERS PARALLEL TO DECK RIBS WHERE SHOWN ON PLAN:

FASTENER	MAXIMUM SPACING
5/8" PUDDLE WELD	12" (IN THE FIELD)
5/8" PUDDLE WELD	12" (IN THE FIELD)

   c. SIDE LAP OF ADJACENT DECK UNITS:

SIDE LAP FASTENER	MAXIMUM SPACING
#10 TEK SCREWS	6"

2. FASTENING TO THE SUPPORTING MEMBER AT DECK SIDE LAPS SHALL BE ON BOTH SIDES OF THE LAP FOR INTERLOCKING LAPS OF THROUGH BOTH PLIES OF DECK FOR OVERLAPPING LAPS.

TYPICAL ROOF DECK FASTENING REQUIREMENTS 1

NO SCALE

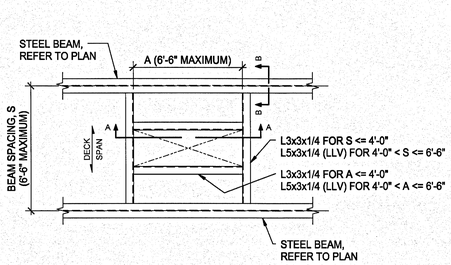

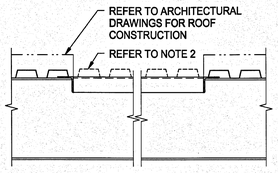

SECTION A-A

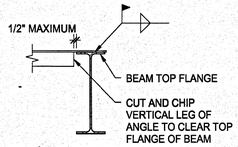

SECTION B-B

NOTES:
1. COORDINATE OPENING SIZES AND LOCATIONS WITH ARCHITECTURAL AND MECHANICAL DRAWINGS.
2. ROOF DECK SHALL BE CONTINUOUS OVER FRAMED OPENINGS. DO NOT CUT OPENINGS UNTIL IMMEDIATELY BEFORE THEY ARE NEEDED.
3. VERIFY FRAMING WITH ENGINEER WHERE DIMENSIONS EXCEED MAXIMUM DIMENSIONS SHOWN IN THIS DETAIL.
4. REFER TO SPECIFICATIONS FOR OPENINGS WHERE THE LONGEST DIMENSION IS 10" OR LESS.

05120-RF-SBM-01
© COPYRIGHT VOLTER P. MOORE AND ASSOCIATES, INC. 2011

TYPICAL FRAMED OPENING IN ROOF DECK 2

NO SCALE

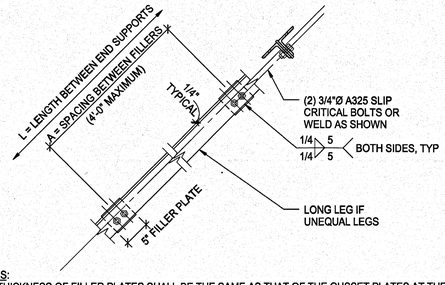

NOTES:
1. THICKNESS OF FILLER PLATES SHALL BE THE SAME AS THAT OF THE GUSSET PLATES AT THE END CONNECTION.
2. THE SPACING BETWEEN THE FILLER PLATES SHALL BE SUCH THAT THE GOVERNING LOCAL SLENDERNESS RATIO (A/R) OF THE SINGLE ANGLES, BETWEEN THE FILLER, IS LESS THAN 75% OF THE GOVERNING SLENDERNESS RATIO (L/R) OF THE DOUBLE ANGLES BETWEEN END SUPPORTS. PROVIDE A MINIMUM OF (2) INTERMEDIATE FILLER PLATES PER DOUBLE ANGLE.
3. R = RADIUS OF GYRATION.
4. AT CONTRACTOR'S OPTION, A325 SLIP CRITICAL BOLTS MAY BE REPLACED BY FILLET WELDS AS SHOWN.

05120-CON-BRACE-34
© COPYRIGHT WALTER P. MOORE AND ASSOCIATES, INC. 2010

FILLER PLATE SPACING CRITERIA FOR DOUBLE ANGLES 3

NO SCALE

SYM	ZONE		DATE	APPROVED

REVISIONS

WALTER P MOORE
WALTER P. MOORE AND ASSOCIATES, INC.
300 SOUTH ORANGE AVENUE, SUITE 1100
ORLANDO, FLORIDA 32801.3332
PHONE: 407.418.2218 FAX: 407.418.2257
CERTIFICATE OF AUTHORIZATION NO. 3018
057-11023-00
JAIME E. VASQUEZ P.E. NO. 49103
TO THE BEST OF THE ENGINEER'S KNOWLEDGE, THE PLANS AND SPECIFICATIONS COMPLY WITH THE APPLICABLE MINIMUM BUILDING CODES

SIGNATURES	DATE
DRAWN ANDREW MYERS	12.18.13
CHECKED JAIME E. VASQUEZ	12.18.13
SUBMITTED: ARCHENG OF RECORD JAIME E. VASQUEZ	12.18.13
ST OF LICENSURE: FL LICENSE NO: 49103	
APPROVED JOSEPH M. ALES	12/18/13
BRUCE KINNAIRD	12/18/13

NATIONAL AERONAUTICS AND SPACE ADMINISTRATION
JOHN F. KENNEDY SPACE CENTER, NASA
KENNEDY SPACE CENTER, FLORIDA

KSC CENTRAL CAMPUS
REPLACEMENT HEADQUARTERS BUILDING
PHASE 1
VOL. 1 OF 4

STEEL FRAMING TYPICAL DETAILS

S502

FILE NO.	SIZE	DWG. NO.	
C-12070.00	F	79K39622 VOL 1	
PCN. NO. 98745.1a		SHEET 170	

NOTICE: When Government drawings, specifications, or other data are used for any purpose other than in connection with a definitely related Government procurement operation, the United States Government thereby incurs no responsibility nor obligation whatsoever; and the fact that the Government may have formulated, furnished, or in any way supplied the said drawings, specifications or other data is not to be regarded by implication or otherwise as in any manner licensing the holder or any other person or corporation, or conveying any rights or permission to manufacture, use, or sell any patented invention that may in any way be related thereto.

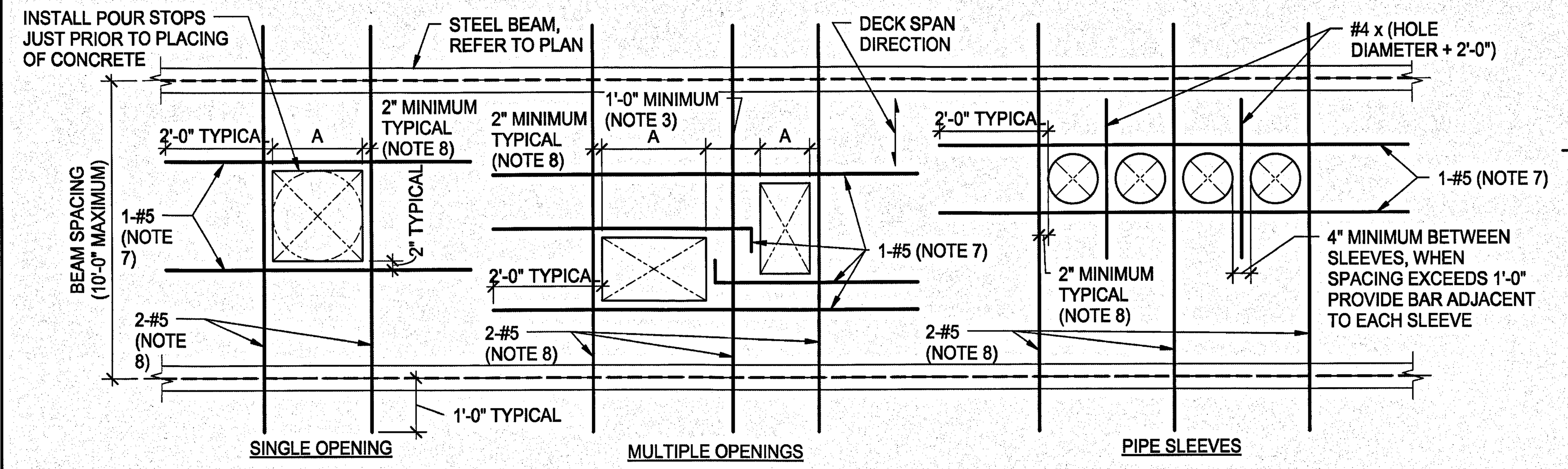

NOTES:

1. COORDINATE OPENING SIZES AND LOCATIONS WITH ARCHITECTURAL AND MECHANICAL DRAWINGS.
2. "A" IS THE OPENING DIMENSION IN THE DIRECTION PERPENDICULAR TO THE DECK SPAN. THIS DETAIL IS APPLICABLE FOR A MAXIMUM "A" DIMENSION OF 4'-0". REFER TO PLAN OR OTHER DETAILS FOR FRAMING OF OPENINGS GREATER THAN 4'-0".
3. WHEN SPACING BETWEEN MULTIPLE OPENINGS IS 2'-0" OR GREATER, REINFORCEMENT SHALL BE PLACED AS SHOWN FOR SINGLE OPENING CONDITIONS.
4. SLAB REINFORCEMENT SHALL BE CUT AROUND SLAB OPENINGS AND SHALL EXTEND TO WITHIN 2" OF OPENINGS ON ALL SIDES.
5. OPENINGS OR GROUPS OF OPENINGS 10" AND SMALLER DO NOT REQUIRE ADDITIONAL REINFORCEMENT.
6. FIELD-CUT OPENINGS IN DECK AFTER CONCRETE SLAB HAS BEEN PLACED AND HAS ATTAINED AT LEAST 75% OF ITS SPECIFIED 28-DAY COMPRESSIVE STRENGTH. DO NOT FIELD-CUT DECK UNTIL IMMEDIATELY BEFORE OPENING IS NEEDED.
7. REINFORCEMENT PERPENDICULAR TO DECK SPAN SHALL BE PLACED ON TOP OF DECK FLUTES AND SHALL BE CHAIRED TO PROVIDE ADEQUATE COVER.
8. REINFORCEMENT PARALLEL TO DECK SPAN SHALL BE PLACED IN THE NEAREST LOWER FLUTE THAT PROVIDES AT LEAST 2" EDGE DISTANCE AND SHALL BE CHAIRED TO PROVIDE ADEQUATE COVER.
9. THIS DETAIL SHOWS TYPICAL CONDITIONS. VERIFY REINFORCING STEEL PLACEMENT WITH ENGINEER FOR SPECIAL CASES OR WHEN DIMENSIONS EXCEED MAXIMUM DIMENSIONS SHOWN IN THIS DETAIL.
10. PROVIDE REINFORCEMENT AS SHOWN FOR SQUARE, RECTANGULAR, OR ROUND OPENINGS.

TYPICAL OPENINGS IN COMPOSITE SLAB (A <= 4'-0") 1

NO SCALE

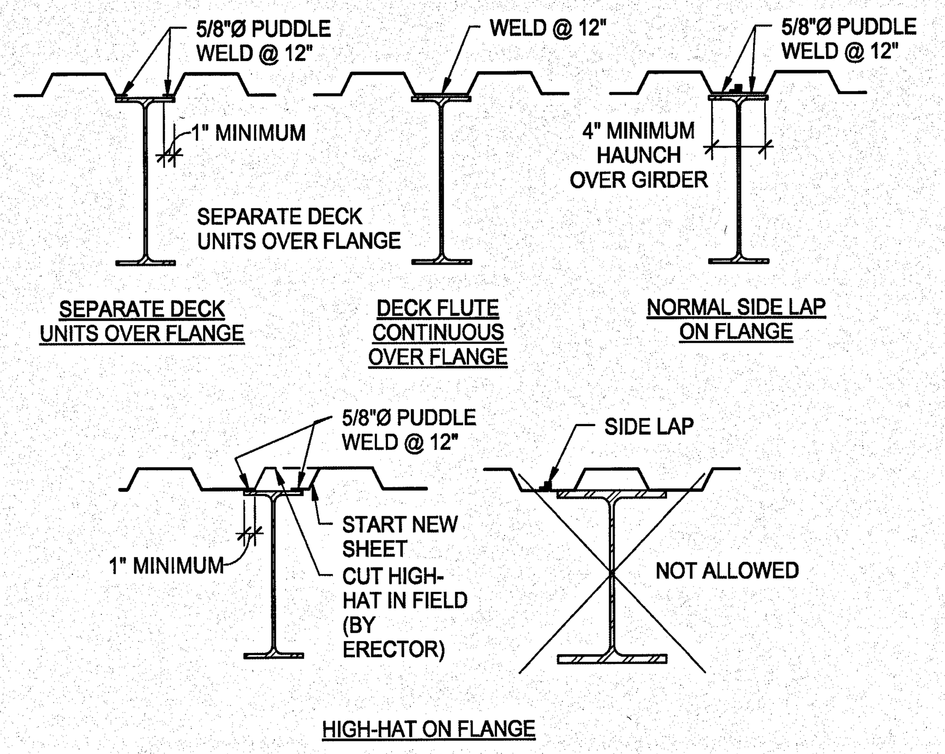

TYPICAL COMPOSITE STEEL DECK DETAILS AT GIRDER 7

NO SCALE

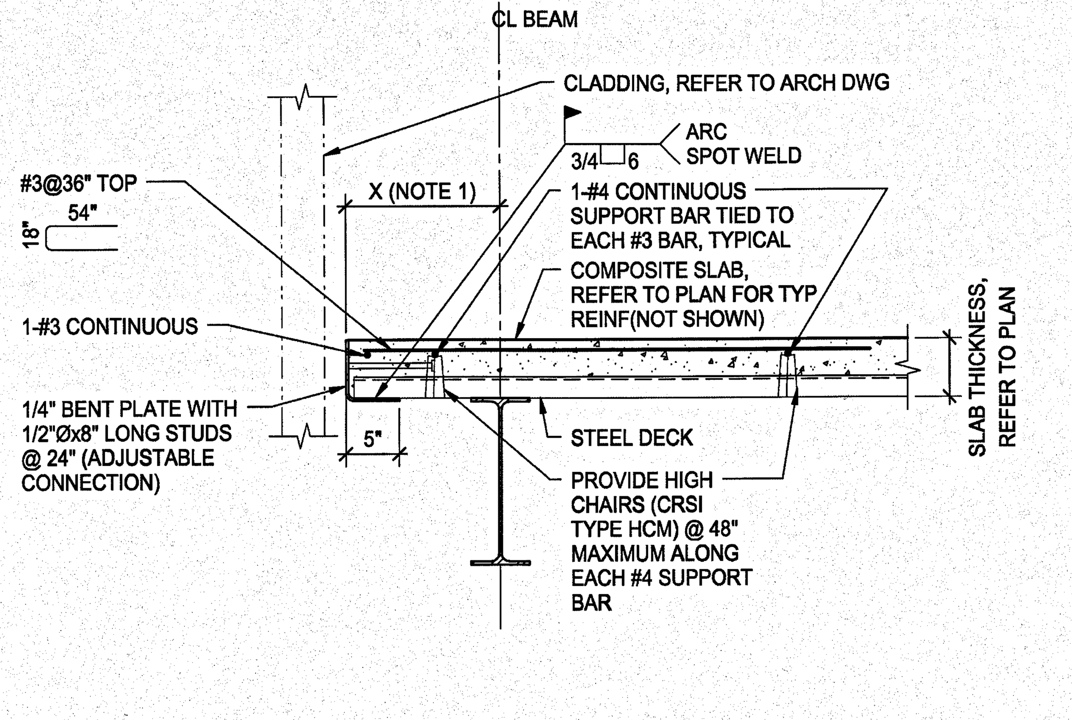

NOTES:

1. REFER TO PLAN FOR SLAB EDGE DIMENSIONS. THIS DETAIL DOES NOT APPLY WHEN DISTANCE "X" EXCEEDS 1'-6".

COMPOSITE SLAB EDGE CONDITION 10

NO SCALE

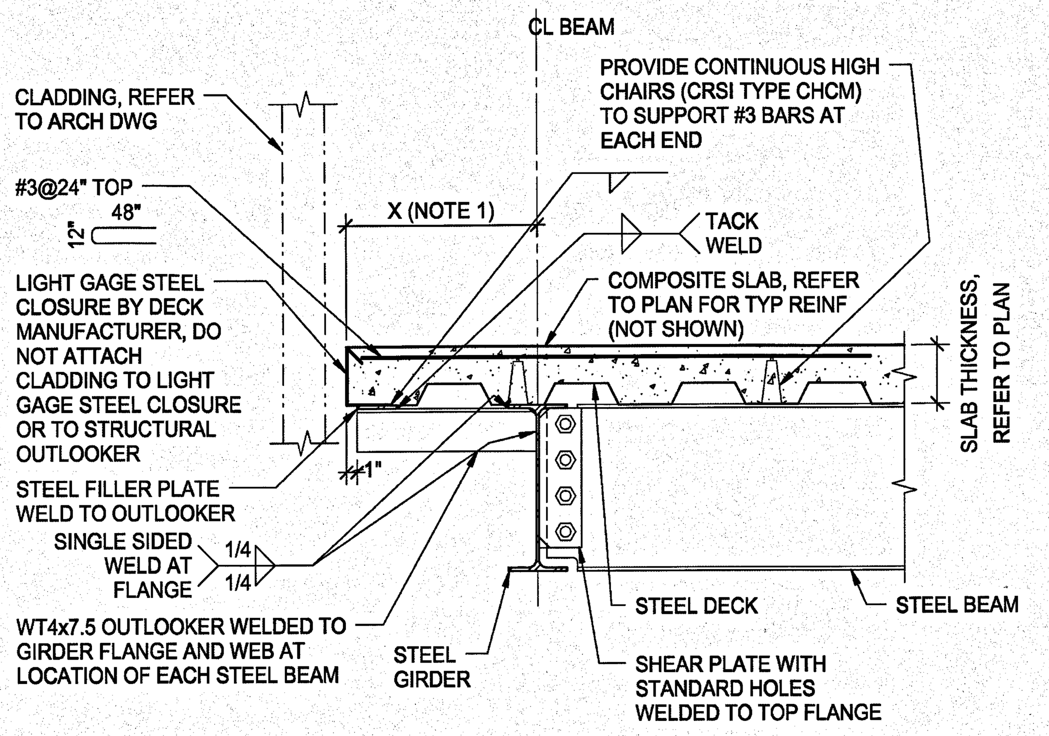

NOTES:

1. REFER TO PLAN FOR SLAB EDGE DIMENSIONS. THIS DETAIL DOES NOT APPLY WHEN DISTANCE "X" EXCEEDS 2'-0".

COMPOSITE SLAB EDGE CONDITION 13

NO SCALE

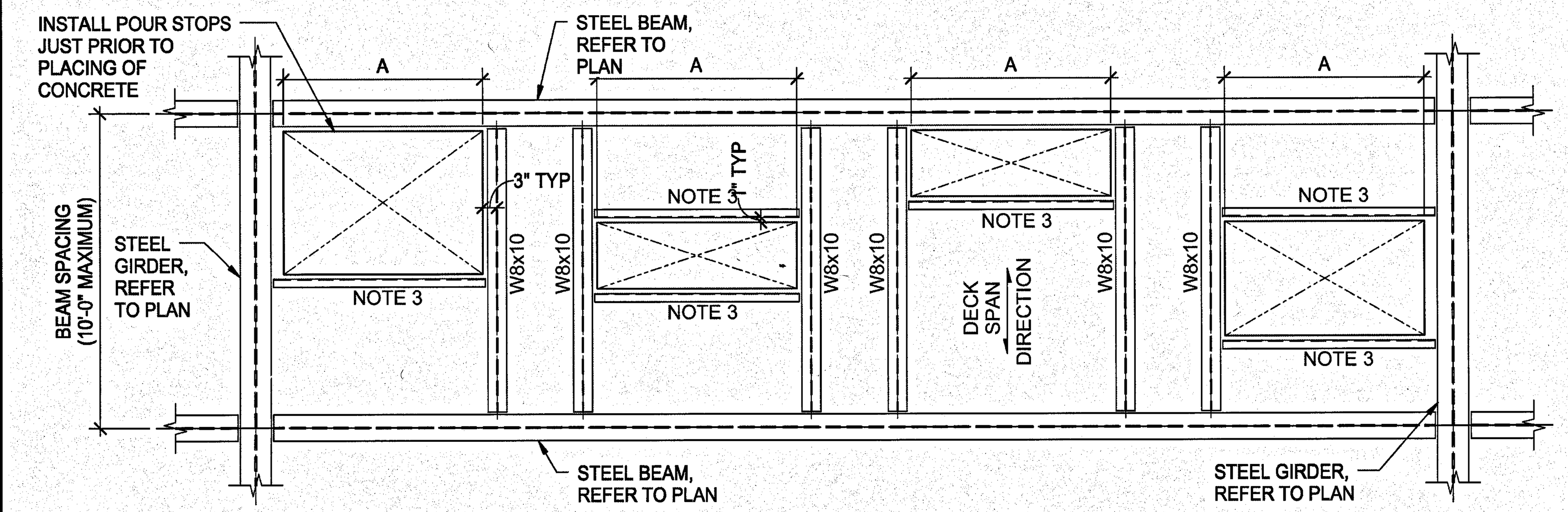

ZSNOTES:

1. COORDINATE OPENING SIZES AND LOCATIONS WITH ARCHITECTURAL AND MECHANICAL DRAWINGS.
2. "A" IS THE OPENING DIMENSION IN THE DIRECTION PERPENDICULAR TO THE DECK SPAN. THIS DETAIL IS APPLICABLE FOR "A" DIMENSIONS GREATER THAN 4'-0" AND UP TO 8'-0". REFER TO PLAN FOR FRAMING OF OPENINGS GREATER THAN 8'-0".
3. WHERE THIS NOTE IS INDICATED, FRAMING MEMBER SHALL BE C5x6.7 FOR 2" DECK SYSTEMS AND C6x8.2 FOR 3" DECK SYSTEMS.
4. DECK SHALL BE CONTINUOUS OVER FRAMED OPENINGS. DO NOT CUT OPENINGS UNTIL CONCRETE HAS BEEN PLACED AND IMMEDIATELY BEFORE OPENINGS ARE NEEDED.
5. THIS DETAIL SHOWS TYPICAL OPENING CONFIGURATIONS. VERIFY FRAMING WITH ENGINEER FOR SPECIAL CASES OR WHERE DIMENSIONS EXCEED MAXIMUM DIMENSIONS SHOWN IN THIS DETAIL.

TYPICAL FRAMED OPENINGS IN COMPOSITE SLAB (4'-0" < A <= 8'-0") 2

NO SCALE

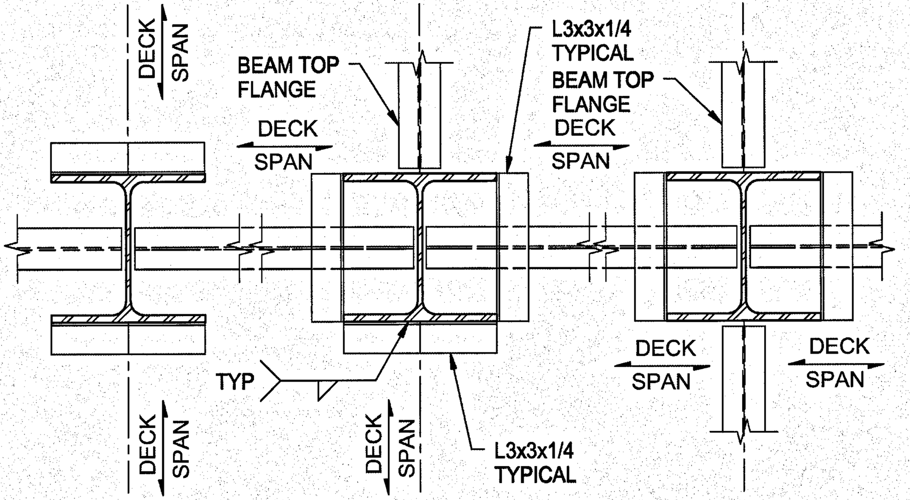

TYPICAL STEEL DECK SUPPORT AT STEEL COLUMNS 8

NO SCALE

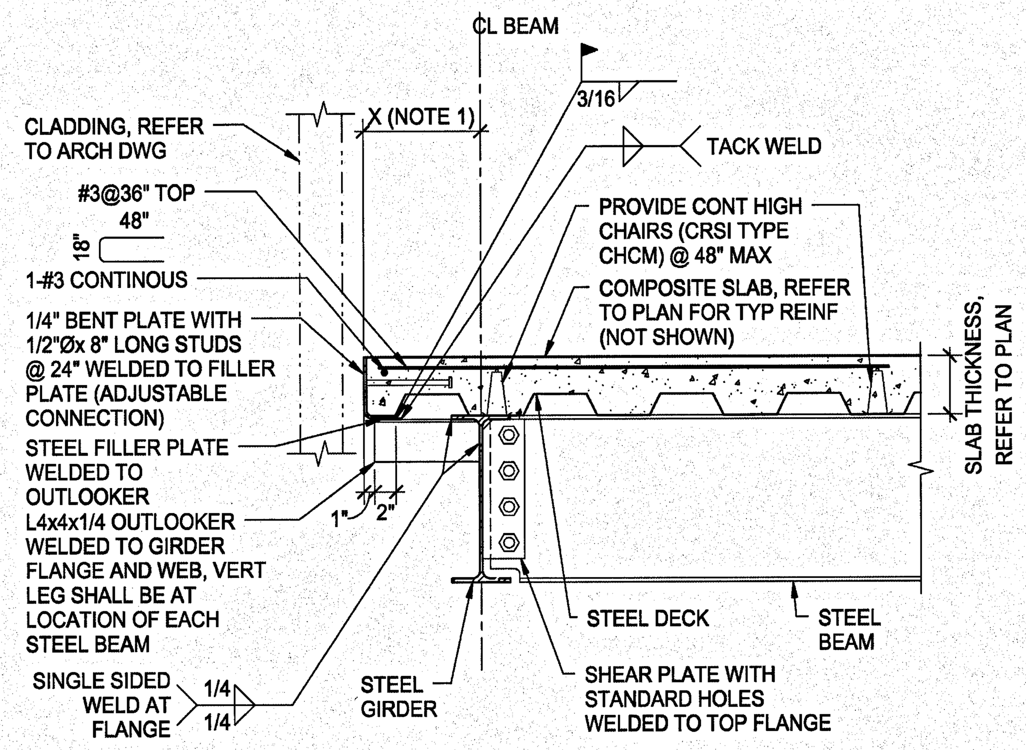

NOTES:

1. REFER TO PLAN FOR SLAB EDGE DIMENSIONS. THIS DETAIL DOES NOT APPLY WHEN DISTANCE "X" EXCEEDS 1'-0".

COMPOSITE SLAB EDGE CONDITION 11

NO SCALE

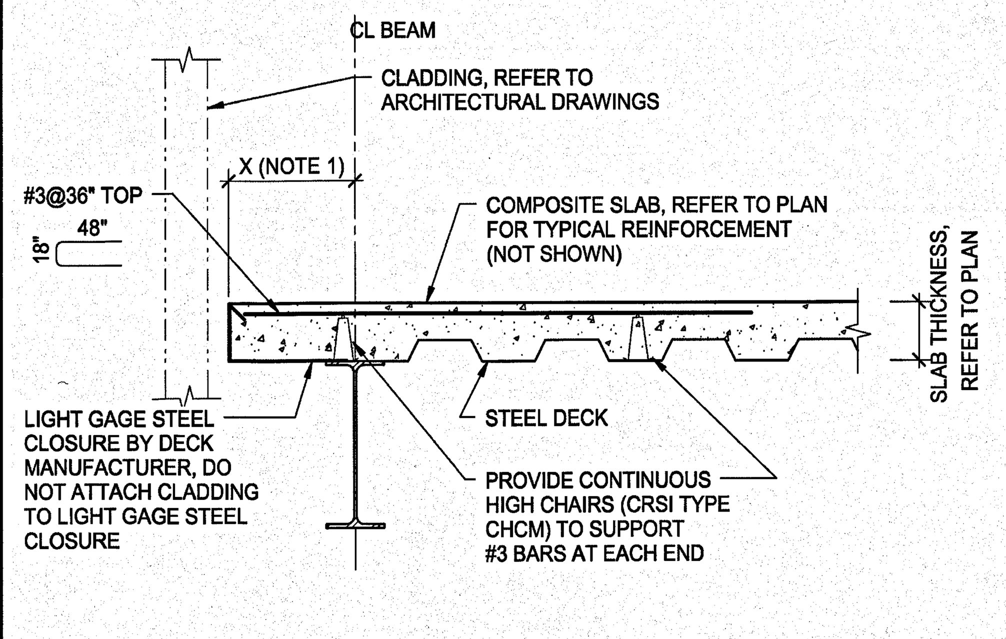

NOTES:

1. REFER TO PLAN FOR SLAB EDGE DIMENSIONS. THIS DETAIL DOES NOT APPLY WHEN DISTANCE "X" EXCEEDS 12" FOR SLABS 6 1/2" THICK OR LESS OR WHEN DISTANCE "X" EXCEEDS 10" FOR SLABS GREATER THAN 6 1/2" AND UP TO 8" THICK.

COMPOSITE SLAB EDGE CONDITION 3

NO SCALE

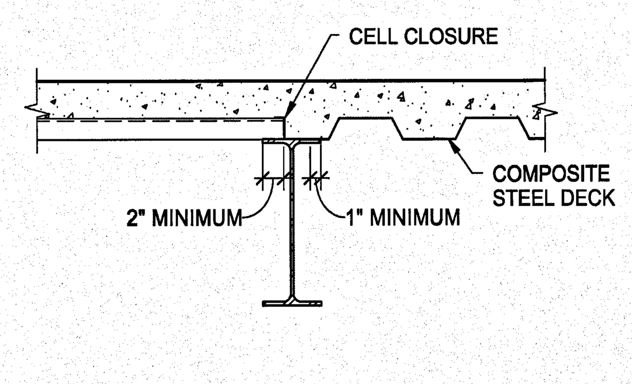

NOTES:

1. USE THIS DETAIL WHEN DECK CHANGES DIRECTION.

TYPICAL COMPOSITE STEEL DECK CLOSURE 6

NO SCALE

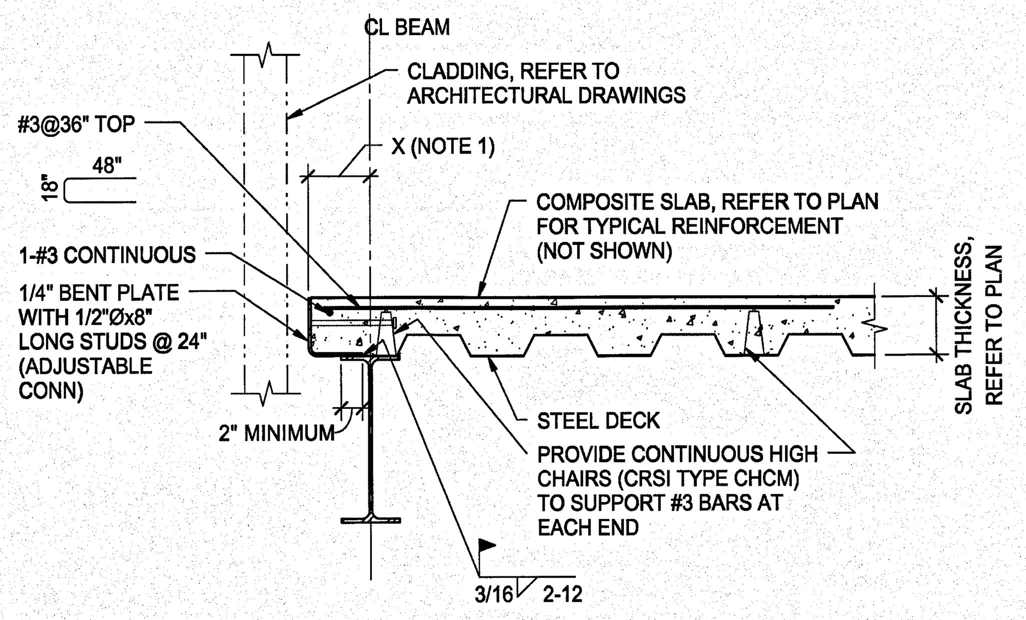

NOTES:

1. REFER TO PLAN FOR SLAB EDGE DIMENSIONS. THIS DETAIL DOES NOT APPLY WHEN DISTANCE "X" EXCEEDS 0'-7".

COMPOSITE SLAB EDGE CONDITION 9

NO SCALE

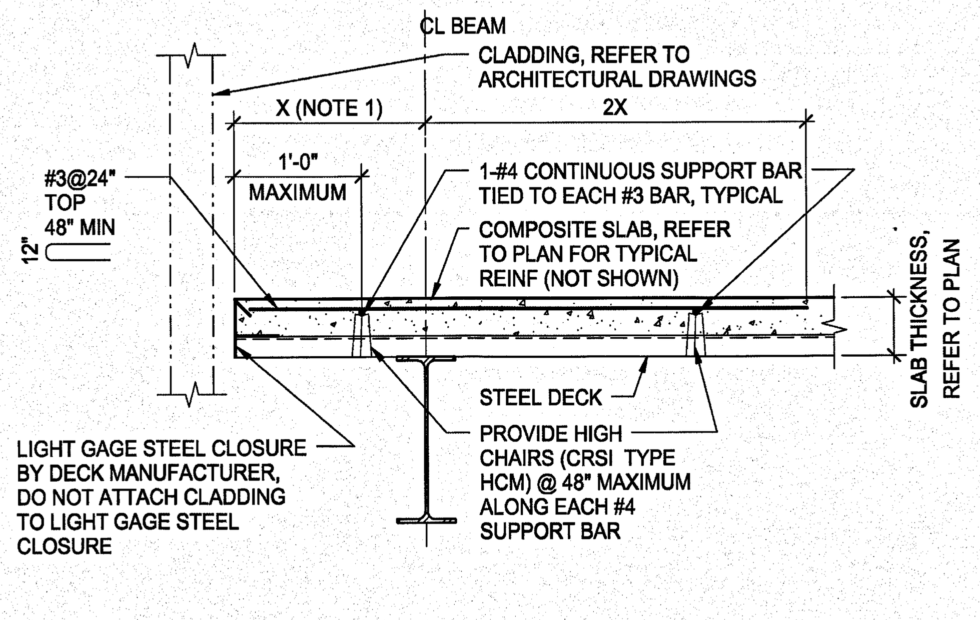

NOTES:

1. REFER TO PLAN FOR SLAB EDGE DIMENSIONS. THIS DETAIL DOES NOT APPLY WHEN DISTANCE "X" EXCEEDS 3'-0".

COMPOSITE SLAB EDGE CONDITION 12

NO SCALE

QC REV. SUBMITTAL
NOT FOR CONSTRUCTION

SYM	ZONE	REVISIONS	DATE	APPROVED

WALTER P MOORE
WALTER P. MOORE AND ASSOCIATES, INC.
300 SOUTH ORANGE AVENUE, SUITE 1100
ORLANDO, FLORIDA 32801.3332
PHONE: 407.418.2218 FAX: 407.418.2257
CERTIFICATE OF AUTHORIZATION NO. 3818
JAIME E. VASQUEZ P.E. NO. 49103
TO THE BEST OF THE ENGINEER'S KNOWLEDGE, THE PLANS AND SPECIFICATIONS COMPLY WITH THE APPLICABLE MINIMUM BUILDING CODES

SIGNATURES	DATE
DRAWN ANDREW MYERS	12.18.13
CHECKED JAIME E. VASQUEZ	12.18.13
SUBMITTED JAIME E VASQUEZ	12.18.13
ST of LICENSURE: FL LICENSE NO: 49103	
APPROVED	12/18/13
BRUCE KINHARD	12/18/13

NATIONAL AERONAUTICS AND SPACE ADMINISTRATION
JOHN F. KENNEDY SPACE CENTER, NASA
KENNEDY SPACE CENTER, FLORIDA

KSC CENTRAL CAMPUS
REPLACEMENT HEADQUARTERS BUILDING
PHASE 1
VOL. 1 OF 4
COMPOSITE STEEL FRAMING
TYPICAL DETAILS

FILE NO.	SIZE	DWG. NO.
C-12070.00	F	79K39622 VOL 1

S511

PCN. NO. 98745.1a — SHEET 171

NOTICE: When Government drawings, specifications, or other data are used for any purpose other than in connection with a definitely related Government procurement operation, the United States Government thereby incurs no responsibility nor obligation whatsoever; and the fact that the Government may have formulated, furnished, or in any way supplied the said drawings, specifications or other data is not to be regarded by implication or otherwise as in any manner licensing the holder or any other person or corporation, or conveying any rights or permission to manufacture, use, or sell any patented invention that may in any way be related thereto.

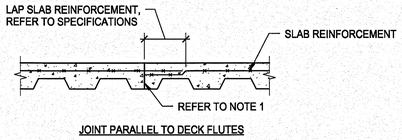

JOINT PARALLEL TO DECK FLUTES

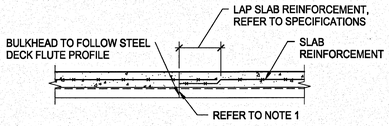

JOINT PERPENDICULAR TO DECK FLUTES

NOTES:
1. PROVIDE REMOVABLE VERTICAL FORMED BULKHEAD SET IN LOWER FLUTE. BULKHEAD MUST EXTEND FULL DEPTH OF SLAB WITH SLAB REINFORCEMENT EXTENDED THROUGH IT.
2. CONSTRUCTION JOINTS PARALLEL TO DECK FLUTES SHALL BE LOCATED NO CLOSER THAN 5'-0" FROM CENTERLINE OF THE NEAREST GIRDER.
3. CONSTRUCTION JOINTS PERPENDICULAR TO DECK FLUTES SHALL BE LOCATED AT THE CENTER OF THE STEEL DECK SPAN.

TYPICAL CONSTRUCTION JOINT IN CONCRETE SLAB ON STEEL DECK (1)

NO SCALE

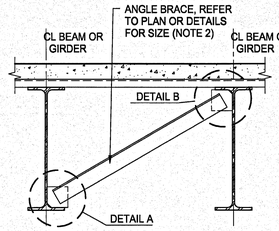

BRACE CONNECTION TO BEAM TOP FLANGE

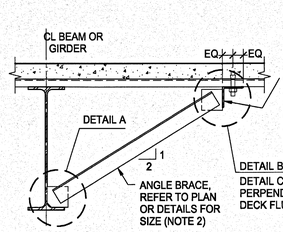

BRACE CONNECTION TO DECK

CONNECTION SCHEDULE			
BRACE SIZE	PLATES A & B	WELDS A & B	CONNECTION ANGLE
L2x2x1/4	4x4x1/4	3/16	L3x3x1/4
L3x3x1/4	4x4x1/4	3/16	L4x4x1/4
L4x4x1/4	5x5x1/4	3/16	N/A
L5x5x5/16	6x6x3/8	1/4	N/A

NOTES:
1. REFER TO PLAN FOR LOCATIONS OF ANGLE BRACES.
2. IF NOT SHOWN ON PLAN OR DETAILS, BRACE SIZE SHALL BE L3x3x1/4.
3. FIELD WELDING OF CONNECTION PLATES SHALL BE AT FABRICATOR'S OPTION.

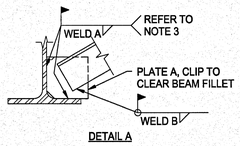

DETAIL A

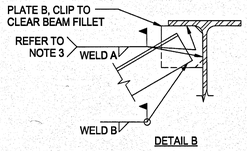

DETAIL B

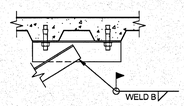

DETAIL C

02130-CM-BMBR-01
© COPYRIGHT WALTER P. MOORE AND ASSOCIATES, INC. 2011

TYPICAL BEAM BOTTOM FLANGE BRACE (COMPOSITE CONSTRUCTION) (4)

NO SCALE

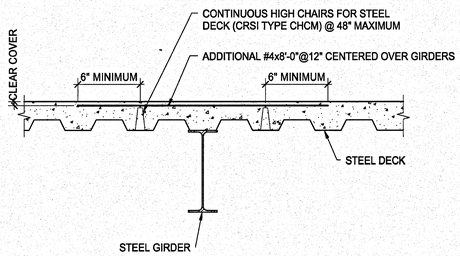

NOTES:
1. REINFORCEMENT SHOWN OVER GIRDERS IS IN ADDITION TO THE TYPICAL SLAB REINFORCEMENT SPECIFIED ON THE DRAWINGS

02200-FL-RSPT-00
© COPYRIGHT WALTER P. MOORE AND ASSOCIATES, INC. 2010

TYPICAL ADDITIONAL REINFORCEMENT IN COMPOSITE SLABS AT INTERIOR GIRDERS (2)

NO SCALE

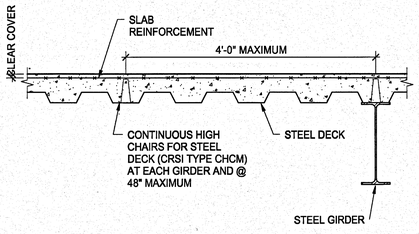

02200-FL-RSPT-00
© COPYRIGHT WALTER P. MOORE AND ASSOCIATES, INC. 2010

TYPICAL REINFORCEMENT PLACEMENT FOR COMPOSITE SLABS (3)

NO SCALE

SYM	ZONE		DATE	APPROVED

REVISIONS

WALTER P MOORE
WALTER P. MOORE AND ASSOCIATES, INC.
500 SOUTH ORANGE AVENUE, SUITE 1100
ORLANDO, FLORIDA 32801.3333
PHONE: 407.418.2218 FAX: 407.418.2257
CERTIFICATE OF AUTHORIZATION NO. 3618
007.11003-00
JAIME E. VASQUEZ P.E. NO. 49103
TO THE BEST OF THE ENGINEER'S KNOWLEDGE, THE PLANS AND SPECIFICATIONS COMPLY WITH THE APPLICABLE MINIMUM BUILDING CODES

SIGNATURES	DATE
DRAWN ANDREW MYERS	12.18.13
CHECKED JAIME E. VASQUEZ	12.18.13
SUBMITTED, ARCHIVED RECORD JAIME E. VASQUEZ	12.18.13
ST of LICENSURE: FL LICENSE NO: 49103	
APPROVED JOSEPH M. ACES	12.18.13
BRUCE KINNAIRD	12/18/13

NATIONAL AERONAUTICS AND SPACE ADMINISTRATION
JOHN F. KENNEDY SPACE CENTER, NASA
KENNEDY SPACE CENTER, FLORIDA

KSC CENTRAL CAMPUS
REPLACEMENT HEADQUARTERS BUILDING
PHASE 1
VOL. 1 OF 4

COMPOSITE STEEL FRAMING TYPICAL DETAILS

S512

FILE NO.	SIZE	DWG. NO.
C-12070.00	F	79K39622 VOL 1

PCN. NO. 98745.1a SHEET 172

NOTICE: When Government drawings, specifications, or other data are used for any purpose other than in connection with a definitely related Government procurement operation, the United States Government thereby incurs no responsibility nor obligation whatsoever; and the fact that the Government may have formulated, furnished, or in any way supplied the said drawings, specifications or other data is not to be regarded by implication or otherwise as in any manner licensing the holder or any other person or corporation, or conveying any rights or permission to manufacture, use, or sell any patented invention that may in any way be related thereto.

CMU REINFORCEMENT NOTES:

1. MINIMUM LAP OF ALL REINFORCEMENT SHALL BE AS FOLLOWS:
   1-#5 BAR: 30 INCHES
   1-#6 BAR: 36 INCHES
   1-#7 BAR: 42 INCHES

   DO NOT LAP VERTICAL REINFORCEMENT AT INTERSECTING BOND BEAMS. REINFORCEMENT SHALL BE CONTINUOUS THROUGH INTERSECTING BOND BEAM.
2. REFER TO 4/S415 FOR INTERIOR LINTEL SCHEDULE.
3. AT INTERIOR SILLS, PROVIDE ONE-COURSE BOND BEAM WITH 1-#5 CONTINUOUS. DEVELOP REINFORCEMENT INTO ADJACENT WALLS.
4. UNLESS NOTED OTHERWISE, AT TOP OF INTERIOR WALLS, PROVIDE A ONE-COURSE BOND BEAM WITH 1-#5 CONTINUOUS. TERMINATE ALL VERTICAL REINFORCEMENT INTO BOND BEAM WITH A STANDARD HOOK. THE HOOK SHALL EXTEND TO THE UPPERMOST HORIZONTAL REINFORCEMENT OF THE BOND BEAM AND SHALL HAVE A MINIMUM EMBEDMENT OF 6".
5. TERMINATE ALL HORIZONTAL REINFORCEMENT OF DISCONTINUOUS ENDS OF BOND BEAMS INTO VERTICAL GROUTED CELLS WITH A STANDARD HOOK. PROVIDE CORNER BARS SUCH THAT HORIZONTAL REINFORCEMENT IS CONTINUOUS AROUND CORNERS.
6. PROVIDE HORIZONTAL REINFORCEMENT IN BED JOINTS EVERY OTHER COURSE (MAXIMUM 16" SPACING). REINFORCEMENT SHALL BE TRUSS-TYPE WITH 9 GAGE SIDE RAILS FABRICATED FROM HIGH-STRENGTH, COLD-DRAWN WIRE CONFORMING TO ASTM A82. TRUSSES SHALL BE GALVANIZED AFTER FABRICATION. ALSO PLACE THREE ROWS OF REINFORCEMENT @ 8" IMMEDIATELY ABOVE ALL WALL OPENINGS AND AT THE TOPS OF WALLS. SIDE LAP RAILS A MINIMUM OF 6".
7. REFER TO 5/S415 FOR CONTROL JOINTS IN MASONRY WALLS.
8. MASONRY WALLS SHALL BE BRACED EITHER BY INTERSECTING WALLS OR BY ANCHORS TO THE STRUCTURE ABOVE. REFER TO OTHER DETAILS FOR BRACING REQUIREMENTS FOR INTERIOR MASONRY WHERE THE INTEGRAL INTERSECTING SUPPORT WALLS AT EACH END OF THE WALL EXCEED A SPACING OF 36 TIMES THE NOMINAL WALL THICKNESS.
9. GROUT LIFT LIMITS:
   A. GROUT POURS SHALL NOT EXCEED 5 FEET PER LIFT, UNLESS CLEANOUTS ARE PROVIDED IN THE BOTTOM COURSE OF EACH 5 FOOT LIFT.
   B. MECHANICALLY VIBRATE ALL LIFTS IN EXCESS OF 1 FOOT.
   C. GROUT LIFTS SHALL NOT BE STOPPED WITHIN 1 1/2" OF BED JOINT.
10. GROUT POURS SHALL NOT EXCEED 24 FEET WHEN GROUTING THE CELLS OF HOLLOW MASONRY. WHEN GROUTING THE SPACE BETWEEN MULTI-WYTHE WALLS, THE TOTAL POUR SHALL NOT EXCEED 24 FEET FOR 3" SPACES, 12 FEET FOR 2 1/2" SPACES, AND 5 FEET FOR 2" SPACES. ALL GROUT MUST BE PLACED WITHIN 1 1/2 HOURS FROM INTRODUCING WATER INTO MIXTURE.

CMU REINFORCEMENT NOTES (1)
NO SCALE

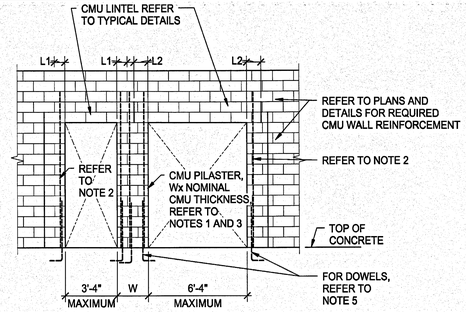

NOTES:
DEFINITIONS:
W: WIDTH OF CMU PILASTER BETWEEN ADJACENT OPENINGS
L1: BEARING REQUIRED FOR OPENING WITH SPAN 1, REFER TO NOTE 6
L2: BEARING REQUIRED FOR OPENING WITH SPAN 2, REFER TO NOTE 6

1. REINFORCE AND GROUT TWO ADJACENT CELLS ON EACH SIDE OF OPENING WITH #5 VERTICAL BARS.
2. REINFORCE FIRST JAMB CELL WITH 1-#5 VERTICALLY. GROUT (2) ADJACENT CELLS SOLID WITH GROUT.
3. THIS DETAILS DOES NOT APPLY WHEN W IS NOT WIDE ENOUGH TO PROVIDE ADEQUATE BEARING OF L1+L2 CONFER TO ENGINEER.
4. THIS DETAILS DOES NOT APPLY WHEN THE CLEAR OPENING HEIGHT EXCEEDS 10'-0".
5. FOR DOWELS, REFER TO TYPICAL DETAIL INTERIOR CMU WALL DOWEL REQUIREMENTS.
6. REFER TO TYPICAL DETAIL INTERIOR NON-LOAD BEARING BLOCK LINTEL SCHEDULE.

TYPICAL NON-LOAD BEARING INTERIOR CMU WALL PILASTER AT OPENINGS (3)
NO SCALE

INTERIOR NON-LOADBEARING CMU LINTELS	
CLEAR SPAN	REINFORCING REQUIREMENTS IN NOMINAL LINTEL SECTION
	8x16
3'-4"	1-#4
4'-0"	1-#4
4'-8"	1-#4
5'-4"	1-#4
6'-0"	2-#3
6'-8"	2-#4
7'-4"	2-#4

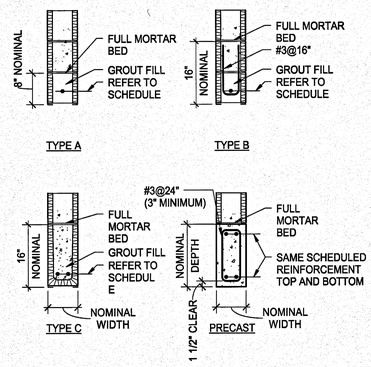

NOTES:
1. REFER TO ARCHITECTURAL DRAWINGS FOR SIZE AND LOCATION OF OPENINGS.
2. PROVIDE 1" OF BEARING AT EACH JAMB FOR EACH FOOT OF CLEAR SPAN BUT NOT LESS THAN 7 5/8". REINFORCEMENT SHALL PROJECT A MINIMUM OF 6" ONTO THE BEARING.
3. MINIMUM MASONRY COMPRESSIVE STRENGTH OF GROUTED PRISM f'm=1500 PSI.
4. LINTELS SCHEDULED AS 16" HIGH MAY BE EITHER TYPE B OR TYPE C AS DETAILED BELOW.
5. PRECAST CONCRETE SOLID OR U-LINTELS AS SHOWN MAY BE USED WITH ARCHITECT APPROVAL. MINIMUM f'c=3000 PSI.
6. USE FOR RUNNING BOND ONLY.

TYPICAL INTERIOR NON-LOADBEARING CMU LINTELS (4)
NO SCALE

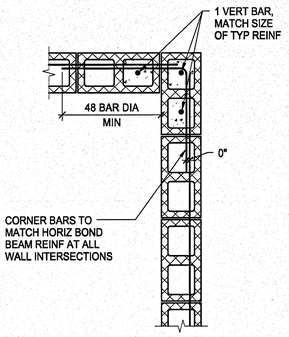

CMU WALL AND BOND BEAM REINFORCEMENT AT WALL INTERSECTIONS (2)
NO SCALE

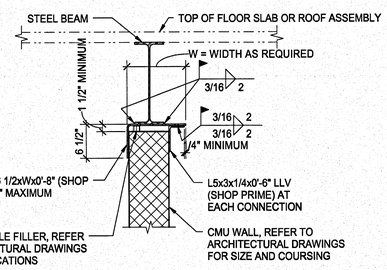

NOTES:
1. THIS DETAIL IS TO BE USED ONLY IF INTERGRAL INTERSECTING SUPPORT WALLS AT EACH END EXCEED A SPACING OF 36 TIMES THE NOMINAL WALL THICKNESS. USE OF THIS DETAIL IS LIMITED TO WALL HEIGHTS UP TO 36 TIMES THE NOMINAL WALL THICKNESS.

TYPICAL INTERIOR NON-LOADBEARING CMU WALL TOP CONNECTION (5)
NO SCALE

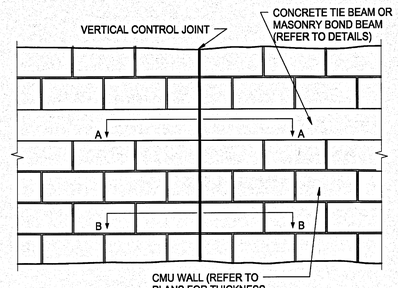

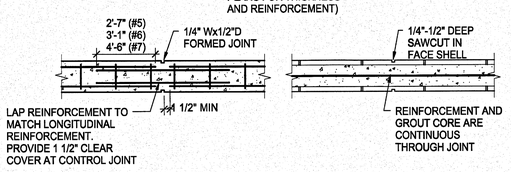

CONTROL JOINT AT CONCRETE TIE BEAM (DETAIL A-A)

CONTROL JOINT AT MASONRY BOND BEAM (DETAIL A-A)

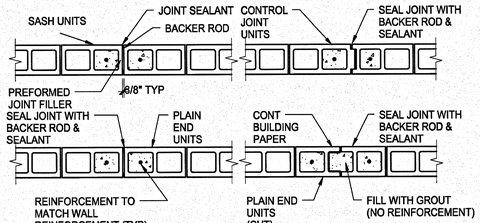

CONTROL JOINTS IN MASONRY WALLS (DETAIL B-B)

NOTES:
1. SEE ARCHITECTURAL DRAWINGS FOR LOCATIONS OF ALL CONTROL JOINTS. IF LOCATIONS ARE NOT SHOWN, CONTRACTOR SHALL SUBMIT PROPOSED LAYOUT FOR A/E APPROVAL. PLACE JOINTS IN ACCORDANCE WITH THE FOLLOWING GUIDELINES:
   A. MAXIMUM SPACING: 20 FEET
   B. MAXIMUM LENGTH/HEIGHT RATIO: 2 TO 1
   C. AT ALL CHANGES IN WALL HEIGHT GREATER THAN 4'-0"
2. COORDINATE WATERPROOFING AND REQUIRED FIRE RATING OF CONTROL JOINTS WITH ARCHITECT.
3. STOP HORIZONTAL JOINT REINFORCEMENT 2" EACH SIDE OF JOINT. SEE DETAILS A-A FOR HORIZONTAL REINFORCEMENT AT TIE BEAMS AND BOND BEAMS.
4. USE HALF BLOCKS AT ALTERNATE COURSES SO JOINTS ARE CONSISTENT THROUGH WALLS.
5. FOUR OPTIONS ARE SHOWN FOR DETAIL B-B. ALTERNATE USED IS AT CONTRACTOR'S OPTION BUT SUBJECT TO APPROVAL BY ARCHITECT.
6. PROVIDE REINFORCED VERTICAL CELL EACH SIDE OF JOINT AS SHOWN. REINFORCEMENT TO MATCH OTHER WALL REINFORCEMENT.
7. PROVIDE ADDITIONAL CMU CONTROL JOINTS IN CMU WALLS WHERE WALL CROSSES SLAB-ON-GRADE CONTROL/CONSTRUCTION JOINTS.

TYPICAL VERTICAL CONSTRUCTION JOINTS IN MASONRY WALLS (6)
NO SCALE

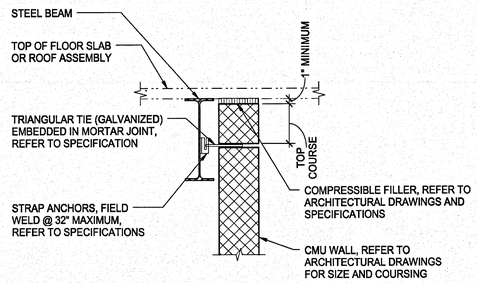

NOTES:
1. THIS DETAIL IS TO BE USED ONLY IF INTERSECTING SUPPORT WALLS EXCEED A SPACING OF 36 TIMES THE NOMINAL WALL THICKNESS. USE OF THIS DETAIL IS LIMITED TO WALL HEIGHTS UP TO 36 TIMES THE NOMINAL WALL THICKNESS.

TYPICAL INTERIOR NON-LOADBEARING CMU WALL SIDE CONNECTION (7)
NO SCALE

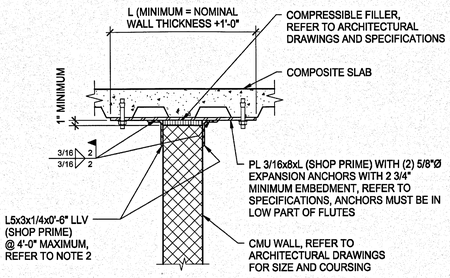

NOTES:
1. THIS DETAIL IS TO BE USED ONLY IF INTEGRAL INTERSECTING SUPPORT WALLS AT EACH END EXCEED A SPACING OF 36 TIMES THE NOMINAL WALL THICKNESS. USE OF THIS DETAIL IS LIMITED TO WALL HEIGHTS UP TO 36 TIMES THE NOMINAL WALL THICKNESS.
2. FOR 4" PARTITIONS GREATER THAN 9'-0" TALL OR 6" PARTITIONS GREATER THAN 15'-0" TALL, REDUCE CONNECTION SPACING TO 3'-6".

TYPICAL INTERIOR NON-LOADBEARING CMU WALL TOP CONNECTION (8)
NO SCALE

SYM	ZONE		DATE	APPROVED

REVISIONS

WALTER P MOORE
WALTER P. MOORE AND ASSOCIATES, INC.
800 SOUTH ORANGE AVENUE, SUITE 1100
ORLANDO, FLORIDA 32801.8332
PHONE: 407.418.2018 FAX: 407.418.2267
CERTIFICATE OF AUTHORIZATION NO. 3818
S97-11028-05
JAIME E. VASQUEZ, P.E. NO. 49103
TO THE BEST OF THE ENGINEER'S KNOWLEDGE, THE PLANS AND SPECIFICATIONS COMPLY WITH THE APPLICABLE MINIMUM BUILDING CODES

SIGNATURES	DATE
DRAWN ANDREW MYERS	12.18.13
CHECKED JAIME E. VASQUEZ	12.18.13
SUBMITTED: ARCHIVED AT RECORD JAIME E. VASQUEZ ST of LICENSURE: FL LICENSE NO: 49103	12.18.13
APPROVED JOSEPH M. ALES	12-18-13
BRUCE KINNAIRD	12/18/13

NATIONAL AERONAUTICS AND SPACE ADMINISTRATION
JOHN F. KENNEDY SPACE CENTER, NASA
KENNEDY SPACE CENTER, FLORIDA

KSC CENTRAL CAMPUS
REPLACEMENT HEADQUARTERS BUILDING
PHASE 1
VOL. 1 OF 4

TYPICAL MASONRY DETAILS

S601

FILE NO.	SIZE	DWG. NO.
C-12070.00	F	79K39622 VOL 1

PCN. NO. 98745.1a SHEET 173

NOTICE: When Government drawings, specifications, or other data are used for any purpose other than in connection with a definitely related Government procurement operation, the United States Government thereby incurs no responsibility nor obligation whatsoever; and the fact that the Government may have formulated, furnished, or in any way supplied the said drawings, specifications or other data is not to be regarded by implication or otherwise as in any manner licensing the holder or any other person or corporation, or conveying any rights or permission to manufacture, use, or sell any patented invention that may in any way be related thereto.

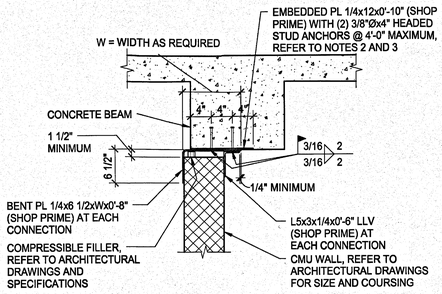

NOTES:
1. THIS DETAIL IS TO BE USED ONLY IF INTEGRAL INTERSECTING SUPPORT WALLS AT EACH END EXCEED A SPACING OF 36 TIMES THE NOMINAL WALL THICKNESS. USE OF THIS DETAIL IS LIMITED TO WALL HEIGHTS UP TO 36 TIMES THE NOMINAL WALL THICKNESS.
2. FOR 4" PARTITIONS GREATER THAN 9'-0" TALL OR 6" PARTITIONS GREATER THAN 15'-0" TALL, REDUCE CONNECTION SPACING TO 3'-6".
3. FOR CONCRETE BEAMS LESS THAN 12" WIDE, PROVIDE PL 1/4x6x0'-10" CENTERED IN BEAM WITH HEADED STUD ANCHORS ORIENTED PARALLEL TO BEAM AXIS.

04200-CN-NCM1-02
© COPYRIGHT WALTER P. MOORE AND ASSOCIATES, INC. 2012

TYPICAL INTERIOR NON-LOADBEARING CMU WALL TOP CONNECTION 1
NO SCALE

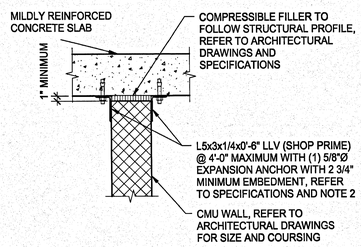

NOTES:
1. THIS DETAIL IS TO BE USED ONLY IF INTEGRAL INTERSECTING SUPPORT WALLS AT EACH END EXCEED A SPACING OF 36 TIMES THE NOMINAL WALL THICKNESS. USE OF THIS DETAIL IS LIMITED TO WALL HEIGHTS UP TO 36 TIMES THE NOMINAL WALL THICKNESS.
2. FOR 4" PARTITIONS GREATER THAN 9'-0" TALL OR 6" PARTITIONS GREATER THAN 15'-0" TALL, REDUCE CONNECTION SPACING TO 3'-6".

04200-CN-NCM1-03
© COPYRIGHT WALTER P. MOORE AND ASSOCIATES, INC. 2012

TYPICAL INTERIOR NON-LOADBEARING CMU WALL TOP CONNECTION 2
NO SCALE

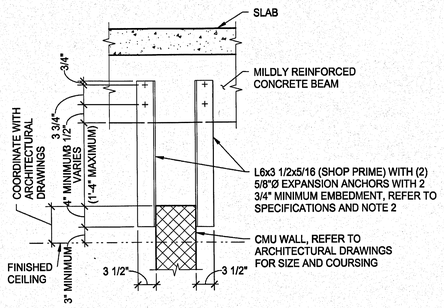

NOTES:
1. THIS DETAIL IS TO BE USED ONLY IF INTERSECTING SUPPORT WALLS EXCEED A SPACING OF 36 TIMES THE NOMINAL WALL THICKNESS. USE OF THIS DETAIL IS LIMITED TO WALL HEIGHTS UP TO 9'-0" FOR 6" PARTITIONS AND 12'-0" FOR 8" PARTITIONS. DO NOT USE FOR 4" PARTITIONS.
2. PROVIDE CONNECTIONS AT ALTERNATE BEAMS FOR 3'-0" SPACING OR LESS AND AT EACH BEAM FOR LARGER SPACINGS (UP TO 6'-0").

04200-CN-NCM1-04
© COPYRIGHT WALTER P. MOORE AND ASSOCIATES, INC. 2012

TYPICAL INTERIOR NON-LOADBEARING CMU WALL TOP CONNECTION 3
NO SCALE

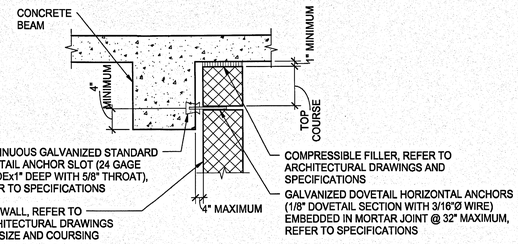

NOTES:
1. THIS DETAIL IS TO BE USED ONLY IF INTERSECTING SUPPORT WALLS EXCEED A SPACING OF 36 TIMES THE NOMINAL WALL THICKNESS. USE OF THIS DETAIL IS LIMITED TO WALL HEIGHTS UP TO 36 TIMES THE NOMINAL WALL THICKNESS.

04200-CN-NCM1-07
© COPYRIGHT WALTER P. MOORE AND ASSOCIATES, INC. 2012

TYPICAL INTERIOR NON-LOADBEARING CMU WALL SIDE CONNECTION 4
NO SCALE

NOTES:
1. THIS DETAIL IS TO BE USED ONLY IF INTERSECTING SUPPORT WALLS EXCEED A SPACING OF 36 TIMES THE NOMINAL WALL THICKNESS. USE OF THIS DETAIL IS LIMITED TO WALL HEIGHTS UP TO 36 TIMES THE NOMINAL WALL THICKNESS.

04200-CN-NCM1-05
© COPYRIGHT WALTER P. MOORE AND ASSOCIATES, INC. 2012

TYPICAL INTERIOR NON-LOADBEARING CMU WALL TOP CONNECTION 5
NO SCALE

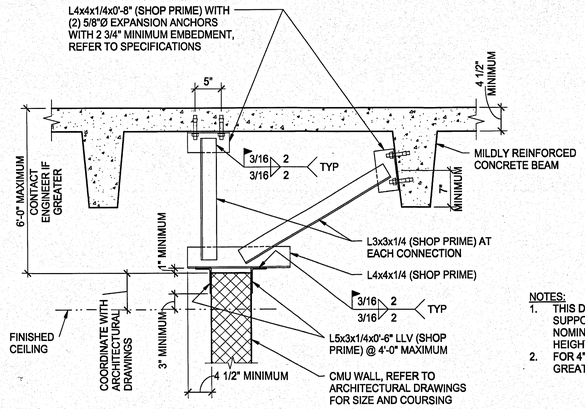

NOTES:
1. THIS DETAIL IS TO BE USED ONLY IF INTEGRAL INTERSECTING SUPPORT WALLS AT EACH END EXCEED A SPACING OF 36 TIMES THE NOMINAL WALL THICKNESS. USE OF THIS DETAIL IS LIMITED TO WALL HEIGHTS UP TO 36 TIMES THE NOMINAL WALL THICKNESS.
2. FOR 4" PARTITIONS GREATER THAN 9'-0" TALL OR 6" PARTITIONS GREATER THAN 15'-0" TALL, REDUCE CONNECTION SPACING TO 3'-6".

04200-CN-NCM1-14
© COPYRIGHT WALTER P. MOORE AND ASSOCIATES, INC. 2012

TYPICAL INTERIOR NON-LOADBEARING CMU WALL TOP CONNECTION 6
NO SCALE

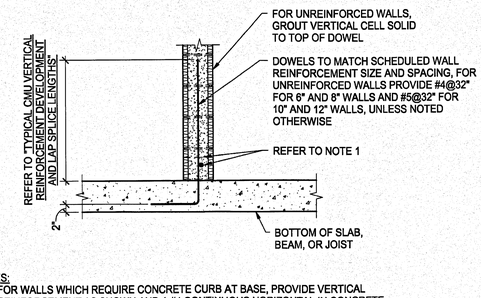

NOTES:
1. FOR WALLS WHICH REQUIRE CONCRETE CURB AT BASE, PROVIDE VERTICAL REINFORCEMENT AS SHOWN AND 1-#4 CONTINUOUS HORIZONTAL IN CONCRETE CURB. SCHEDULED DOWEL LENGTH SHALL BEGIN ABOVE CONCRETE CURB.
2. DOWELS SHALL BE PROVIDED FOR ALL INTERIOR AND EXTERIOR WALLS WHETHER OR NOT THE WALL HAS VERTICAL REINFORCEMENT.

04200-CN-NCM1-01
© COPYRIGHT WALTER P. MOORE AND ASSOCIATES, INC. 2012

TYPICAL INTERIOR CMU WALL DOWEL REQUIREMENTS 7
NO SCALE

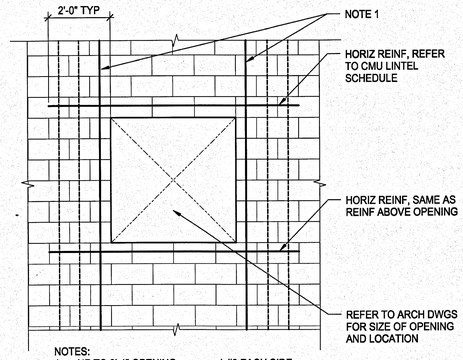

NOTES:
1. UP TO 3'-4" OPENING: 1-#6 EACH SIDE
   UP TO 6'-4" OPENING: 1-#6 EACH SIDE
   UP TO 12'-4" OPENING: 1-#6 EACH SIDE
2. DOWELS TO MATCH VERTICAL REINFORCEMENT.

ADDITIONAL EXTERIOR WALL REINFORCEMENT AT OPENING 8
NO SCALE

SYM	ZONE		DATE	APPROVED

REVISIONS

WALTER P MOORE
WALTER P. MOORE AND ASSOCIATES, INC.
300 SOUTH ORANGE AVENUE, SUITE 1100
ORLANDO, FLORIDA 32801.3332
PHONE: 407.418.2218 FAX: 407.418.2257
CERTIFICATE OF AUTHORIZATION NO. 3016
907-11003-07
JAIME E. VASQUEZ P.E. NO. 49103
TO THE BEST OF THE ENGINEER'S KNOWLEDGE, THE PLANS AND SPECIFICATIONS COMPLY WITH THE APPLICABLE MINIMUM BUILDING CODES

SIGNATURES	DATE
DRAWN ANDREW MYERS	12.18.13
CHECKED JAIME E. VASQUEZ	12.18.13
SUBMITTED, ARCHITECT OF RECORD JAIME E. VASQUEZ	12.18.13
ST of LICENSURE: FL LICENSE NO: 49103	
APPROVED JOSEPH M. ALES	12.18.13
BRUCE KINNAIRD	12/18/13

NATIONAL AERONAUTICS AND SPACE ADMINISTRATION
JOHN F. KENNEDY SPACE CENTER, NASA
KENNEDY SPACE CENTER, FLORIDA

KSC CENTRAL CAMPUS
REPLACEMENT HEADQUARTERS BUILDING
PHASE 1
VOL. 1 OF 4

TYPICAL MASONRY DETAILS

FILE NO.	SIZE	DWG. NO.
C-12070.00	F	79K39622 VOL 1
PCN. NO. 98745.1a		SHEET 174 of 174

S602

KSC FORM 1-11 (3/76)(C/G 3/94)