NOTICE: When Government drawings, specifications, or other data are used for any purpose other than in connection with a definitely related Government procurement operation, the United States Government thereby incurs no responsibility nor obligation whatsoever; and the fact that the Government may have formulated, furnished, or in any way supplied the said drawings, specifications or other data is not to be regarded by implication or otherwise as in any manner licensing the holder or any other person or corporation, or conveying any rights or permission to manufacture, use, or sell any patented invention that may in any way be related thereto.

KSC CENTRAL CAMPUS REPLACEMENT HEADQUARTERS BUILDING OFF SITE UTILITIES

Hunton Brady ARCHITECTS

NATIONAL AERONAUTICS AND SPACE ADMINISTRATION

Kennedy Space Center, Florida

PROJ. NO. PCN 98745/98745.1a/98745.2a

VICINITY MAP

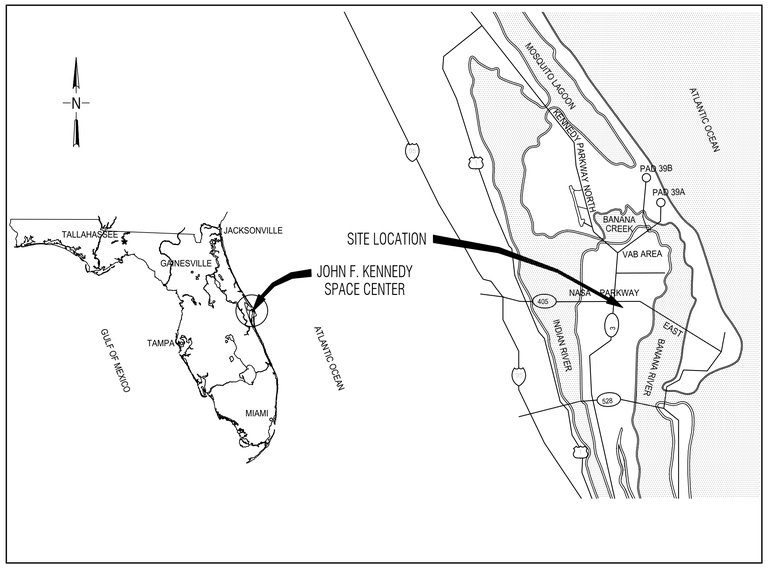

SITE MAP

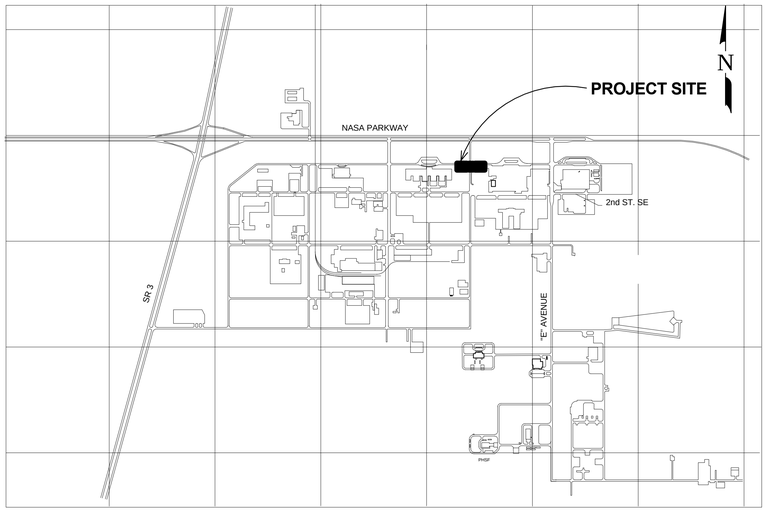

Export Determination Request

NASA KSC Export Control Office (ECO)

EDR# 1419623

DOCUMENT INFORMATION: (TITLE, NUMBER, REV, DATE)

KSC CENTRAL CAMPUS REPLACEMENT HEADQUARTERS BUILDING
OFF SITE UTILITIES
79K39624 REV. A.

Sensitive But Unclassified (SBU)

SBU must be handled and protected as instructed in NID 1600-55, NASA Security Program Procedural Requirements, Sensitive But Unclassified (SBU) Controlled Information, Section 5.24. However, it is included on this form only as a convenience to the user.

	Yes	No	SBU Reviewer's Signature	Date	Company / Org
Document contains SBU?	☐	☐			

Export Control (EC)

Additional Comments about this item

	EXPORT DETERMINATION	
EAR 99		The information contained in the document is technical in content, but is not technical data as defined by the ITAR or the EAR, and therefore is EAR 99 NLR (no export license required). [General Prohibition Six (Embargo) applies to all items subject to the EAR, i. e. items on the CCL and within EAR 99 NLR. You may not make an export or re-export contrary to the provisions of part 746 (Embargos and Other Special Controls) of the EAR and 22 CFR part 126.1 of the ITAR.]
EAR		This document is within the purview of the Export Administration Regulations (EAR), 15 CFR 730-774, and is export controlled. It may not be transferred to foreign nationals in the U.S. or abroad without specific approval of a knowledgeable NASA export control official, and/or unless an export license or license exception is obtained/available from the Bureau of Industry and Security, United States Department of Commerce. Violations of these regulations are punishable by fine, imprisonment, or both.
ITAR		This document contains information which falls under the purview of the U.S. Munitions List (USML), as defined in the International Traffic in Arms Regulations (ITAR), 22 CFR 120-130, and is export controlled. It shall not be transferred to foreign nationals, in the U.S. or abroad, without specific approval of a knowledgeable NASA export control official, and/or unless an export license or license exemption is obtained/available from the United States Department of State. *Violations of these regulations are punishable by fine, imprisonment, or both.*
Not Export Controlled		

Attach file for review

Contractor EC Reviewer's Name and Organization	Contractor EC Reviewer's Signature	Date

NASA ECO Reviewer's Name and Organization	NASA ECO Reviewer's Signature	Date

Contact the KSC ECO Help Desk (867-9209) for help in completing this form.

Click to email form to the Export Control Office

KSC FORM 7-657 NS 03/14 (1.1) PREVIOUS EDITIONS ARE OBSOLETE. Validate prior to use.

NRRS 2/7.5.A
Page 1 of 1

ARCHITECT
HUNTONBRADY ARCHITECTS, P.A.
800 North Magnolia Ave., Suite 600
Orlando, Florida 32803
407.839.0886
License AAC001744

SYM	ZONE	REVISIONS	DATE	APPD
A		REVISED SHEETS 1 - 24	05.14.14	

Hunton Brady ARCHITECTS
HuntonBrady Architects P.A.
800 North Magnolia Avenue
Suite 600
Orlando, Florida 32803

SIGNATURES	DATE
DRAWN Bryce Denker	12.18.13
CHECKED Robert Davidescu	12.18.13
SUBMITTED: ARCHENG OF RECORD Drew Krecicki	12.18.13
APPROVED Steve Beiflower	12.18.13
Thomas Wilczek	12.19.13
Wallace R Schroeder	12.20.13

NATIONAL AERONAUTICS AND SPACE ADMINISTRATION
JOHN F. KENNEDY SPACE CENTER, NASA
KENNEDY SPACE CENTER, FLORIDA

KSC CENTRAL CAMPUS
REPLACEMENT HEADQUARTERS BUILDING
OFF SITE UTILITIES

COVER SHEET

G000

FILE NO.	SIZE	DWG. NO.	
C-12070.00	F	79K39624	A

PCN. NO. 98745/98745.1a/98745.2a SHEET 1 OF 24

KSC FORM 1-11 (3/76)(C/G 3/94)

NOTICE: When Government drawings, specifications, or other data are used for any purpose other than in connection with a definitely related Government procurement operation, the United States Government thereby incurs no responsibility nor obligation whatsoever; and the fact that the Government may have formulated, furnished, or in any way supplied the said drawings, specifications or other data is not to be regarded by implication or otherwise as in any manner licensing the holder or any other person or corporation, or conveying any rights or permission to manufacture, use, or sell any patented invention that may in any way be related thereto.

DRAWING INDEX

GENERAL			
1	G000	COVER SHEET	■
2	G001	DRAWING INDEX	■
CIVIL			
3	C001	GENERAL NOTES	■
4	C002	LEGEND AND ABBREVIATIONS	■
5	C003	KEY MAP	■
6	C101	1ST STREET AND C AVE DITCH PLAN AND PROFILE	■
7	C102	1ST STREET DITCH PLAN AND PROFILE	■
8	C103	2ND STREET DITCH PLAN AND PROFILE	■
9	C104	2ND STREET DITCH PLAN AND PROFILE	■
10	C105	3RD STREET AND D AVE DITCH PLAN AND PROFILE	■
11	C106	3RD STREET DITCH PLAN AND PROFILE	■
12	C107	D AVENUE DITCH PLAN AND PROFILE	■
13	C108	E AVENUE DITCH PLAN AND PROFILE	■
14	C109	E AVENUE SE PLAN AND PROFILE	■
15	C110	DITCH CLEANING PLAN	■
16	C111	GRADING PLANS	■
17	C112	DRAINAGE STRUCTURE AND PIPING TABLES	■
18	C113	NOT USED	■
19	C114	NOT USED	■
20	C115	STORMWATER DETAILS	■
21	C116	STORMWATER DETAILS	■
22	C201	CIVIL DETAILS	■
23	C202	CIVIL DETAILS	■
24	C203	CIVIL DETAILS	■

OWNER
National Aeronautics and Space Administration

ARCHITECT
HUNTONBRADY ARCHITECTS, P.A.
800 North Magnolia Ave., Suite 600
Orlando, Florida 32803
407.839.0886
License AAC001744

CIVIL
Jones Edmunds & Associates
3910 S. Washington Ave., Suite 210
Titusville, FL 32780
321.269.2950

SYM	ZONE		DATE	APPD
A		THIS SHEET REVISED IN ITS ENTIRETY	05.14.14	

REVISIONS

HuntonBrady ARCHITECTS

HuntonBrady Architects P.A.
800 North Magnolia Avenue
Suite 600
Orlando, Florida 32803

SIGNATURES	DATE
DRAWN Bryce Denker	12.18.13
CHECKED Robert Davidescu	12.18.13
SUBMITTED: ARCHENG OF RECORD Drew Krecicki	12.18.13
ST of LICENSURE: FL LICENSE NO: AAC001744	12.18.13
APPROVED Steve Beiflower	12.18.13
Thomas Wilczek	12.19.13

NATIONAL AERONAUTICS AND SPACE ADMINISTRATION
JOHN F. KENNEDY SPACE CENTER, NASA
KENNEDY SPACE CENTER, FLORIDA

KSC CENTRAL CAMPUS
REPLACEMENT HEADQUARTERS BUILDING
OFF SITE UTILITIES

DRAWING INDEX

FILE NO.	SIZE	DWG. NO.	
C-12070.00	F	79K39624	A
PCN. NO. 98745/98745.1a/98745.2a		SHEET 2	

G001

NOTICE: When Government drawings, specifications, or other data are used for any purpose other than in connection with a definitely related Government procurement operation, the United States Government thereby incurs no responsibility nor obligation whatsoever; and the fact that the Government may have formulated, furnished, or in any way supplied the said drawings, specifications or other data is not to be regarded by implication or otherwise as in any manner licensing the holder or any other person or corporation, or conveying any rights or permission to manufacture, use, or sell any patented invention that may in any way be related thereto.

GENERAL NOTES

1. EXISTING CONDITIONS PLAN IS A COMPILATION OF SURVEYS, GIS, AND LIDAR INFORMATION. GIS INFORMATION WAS PROVIDED BY NASA JAN 15, 2010. LIDAR INFORMATION WAS PROVIDED BY PROGRAM & DATA SOLUTIONS (PDS) AND PERFORMED BETWEEN SEPT 15 AND SEPT 29, 2007. SURVEYS USED IN EXISTING CONDITIONS PLANS INCLUDE:

   - HEADQUARTERS/FIRST STREET ADA PARKING LOT (DWG 79K36438). SURVEY PERFORMED BY KUGELMANN LAND SURVEYING INC., DATED FEBRUARY 2005.
   - REPAVE O&C PARKING LOTS (DWG 79K38792). SURVEY PERFORMED BY KUGELMANN LAND SURVEYING INC., DATED MAY 2010.
   - REVITALIZE W/WW SYSTEMS PHASE 4 (DWG 79K38877). SURVEY PERFORMED BY KUGELMANN LAND SURVEYING INC., DATED JULY 2011.
   - CENTRAL CAMPUS COMPLEX SITING STUDY (PCN 98745). PERFORMED BY KUGELMANN LAND SURVEYING INC., DATED APRIL 2010.

2. ALL ELEVATIONS ARE REFERENCED TO NORTH AMERICAN VERTICAL DATUM 1988 (NAVD 88).

3. LOCATIONS, ELEVATIONS, AND DIMENSIONS OF EXISTING STRUCTURES, UTILITIES AND OTHER FEATURES SHOWN ARE BASED ON THE BEST INFORMATION AVAILABLE AT THE TIME OF PREPARATION OF THESE DRAWINGS BUT ARE NOT PURPORTED TO BE ABSOLUTELY CORRECT. THERE MAY BE OTHER IMPROVEMENTS WITHIN THE PROJECT AREA. CONTRACTOR SHALL VERIFY, PRIOR TO CONSTRUCTION, THE LOCATIONS, ELEVATIONS, AND DIMENSIONS OF ALL EXISTING STRUCTURES, AND OTHER FEATURES (WHETHER OR NOT SHOWN ON THE DRAWINGS) AFFECTING THE WORK.

4. THE CONTRACTOR SHALL NOTIFY THE CONTRACTING OFFICER IN WRITING IMMEDIATELY IF CONFLICTS OR DISCREPANCIES BETWEEN THE DRAWINGS AND ACTUAL CONDITIONS ARE DISCOVERED. THE CONTRACTOR SHALL ACCURATELY RECORD ANY SUCH CONFLICTS ON THE CONSTRUCTION DRAWINGS.

5. THE CONTRACTOR SHALL NOTIFY THE CONTRACTING OFFICER IN WRITING A MINIMUM OF 14 WORKING DAYS PRIOR TO MAKING ANY CONNECTION TO THE WATER, SEWER, COMMUNICATION, ELECTRIC, OR OTHER UTILITY SERVICE. ADDITIONALLY, THE CONTRACTOR SHALL OBTAIN WRITTEN AUTHORIZATION FROM THE CONTRACTING OFFICER A MINIMUM OF 14 WORKING DAYS PRIOR TO INTERRUPTING WATER, SEWER, COMMUNICATION, ELECTRICAL, OR OTHER UTILITY SERVICE.

6. THE CONTRACTOR SHALL PRESERVE AND MAINTAIN EXISTING UTILITIES, STRUCTURES, AND OTHER FEATURES INSIDE AND OUTSIDE THE PROJECT LIMITS. THE CONTRACTOR SHALL REPAIR OR REPLACE ALL UTILITIES, STRUCTURES AND FEATURES INCLUDING PAVING, STABILIZED EARTH, PIPING, GRASS, SOD, DITCHES, FENCES, GATES, SIGNS, TRAFFIC STRIPING, UTILITIES, BUILDINGS, FENCING, MONITORING WELLS, AND ANY OTHER EXISTING SITE FEATURES OR IMPROVEMENTS DAMAGED AS A RESULT OF THE CONTRACTOR'S ACTIVITIES WITH THE SAME TYPE OF MATERIAL THAT WAS REMOVED OR DAMAGED DURING CONSTRUCTION, OR AS DIRECTED BY THE CONTRACTING OFFICER, AT THE CONTRACTOR'S EXPENSE.

7. CONTRACTOR SHALL HAND EXCAVATE IN THE VICINITY OF ALL EXISTING UNDERGROUND UTILITIES, IN ACCORDANCE WITH REFERENCE DOCUMENT KNPR 8715-7.

8. THE CONTRACTOR SHALL FIELD VERIFY EXISTING UTILITIES, (SIZE, MATERIAL OF CONSTRUCTION, ELEVATION, ETC.) INCLUDING AT CONNECTING POINTS, PRIOR TO SHOP DRAWING PREPARATION AND SUBMITTAL.

9. REFERENCES TO FDOT SPECIFICATIONS SHALL REFER TO THE FLORIDA DEPARTMENT OF TRANSPORTATION "STANDARD SPECIFICATIONS FOR ROAD AND BRIDGE CONSTRUCTION - 2010" (RED COVER).

10. FDOT INDICES SHALL REFER TO THE "2010 FLORIDA DEPARTMENT OF TRANSPORTATION ROADWAY AND TRAFFIC DESIGN STANDARDS."

11. THE CONTRACTOR SHALL PROVIDE CONTROL AND MAINTENANCE OF TRAFFIC IN ACCORDANCE WITH FDOT INDICES 600 THROUGH 660.

12. THE CONTRACTOR SHALL PROVIDE SIGNAGE IN ACCORDANCE WITH THE MUTCD AND FDOT INDICES 9535 THROUGH 17355.

13. THE CONTRACTOR SHALL VERIFY THAT ALL REQUIRED CLEARANCES CAN BE MET, AND IF ANY CANNOT BE MET, CONTRACTOR SHALL NOTIFY THE CONTRACTING OFFICER IN WRITING 14 FULL WORKING DAYS PRIOR TO CONSTRUCTING ANY SUCH ITEM.

14. THE CONTRACTOR IS RESPONSIBLE FOR BRACING, SHORING, OR PROVIDING OTHER MEANS NECESSARY TO PROTECT AND SUPPORT EXISTING AND PROPOSED UTILITIES AND STRUCTURES EXPOSED OR UNEXPOSED DURING CONSTRUCTION.

15. THE CONTRACTOR IS SOLELY RESPONSIBLE FOR PROPER VERTICAL AND HORIZONTAL ALIGNMENT OF CONSTRUCTED FACILITIES, PIPELINES, AND FINISHED GRADES. ALL CONSTRUCTION SURVEYING, ALIGNMENT, STAKING, ETC., SHALL BE PERFORMED BY A PROFESSIONAL LAND SURVEYOR REGISTERED IN THE STATE OF FLORIDA.

16. ALL AREAS INSIDE AND OUTSIDE THE PROJECT LIMITS DISTURBED AS A RESULT OF THE CONTRACTOR'S ACTIVITIES SHALL BE RESTORED TO ORIGINAL OR DESIGN GRADE AS APPLICABLE AT THE CONTRACTOR'S EXPENSE.

17. CONTRACTOR SHALL NOT CLOSE OR OBSTRUCT STREETS, WALKS, OR OTHER ADJACENT OCCUPIED OR IN-USE FACILITIES WITHOUT PERMISSION FROM THE CONTRACTING OFFICER. IN ADDITION, THE CONTRACTOR SHALL PROVIDE ALTERNATE ROUTES AROUND CLOSED OR OBSTRUCTED TRAFFIC WAYS.

18. FACILITIES AND IMPROVEMENTS TO REMAIN SHALL BE CLEANED ON A DAILY BASIS OF DUST, DIRT, AND DEBRIS CAUSED BY CONTRACTOR'S OPERATIONS.

19. ALL SLOPES STEEPER THAN 4:1 SHALL BE SODDED, AND THE SOD SHALL BE STAKED TO PREVENT MOVEMENT.

20. GRADING BETWEEN SPOT ELEVATIONS, CONTOURS AND WHEN MATCHING EXISTING GRADES SHALL BE ON A SMOOTH STRAIGHT LINE UNLESS NOTED OTHERWISE.

21. REGRADE DITCHES AS NECESSARY TO PROVIDE POSITIVE DRAINAGE AND PREVENT LOCALIZED PONDING OR LOW SPOTS.

22. ALL PAINTED CONCRETE CAN BE TAKEN TO THE KSC LANDFILL. ALL UNPAINTED CONCRETE CAN GO TO THE DARCY.

23. DEWATERING EFFLUENT MAY BE DISCHARGED TO GRADE. DEWATERING MUST BE CONDUCTED IN ACCORDANCE WITH THE "NOTICED GENERAL PERMIT FOR SHORT TERM CONSTRUCTION DEWATERING" PERMIT #84324 ISSUED BY THE ST. JOHNS RIVER WATER MANAGEMENT DISTRICT AND CONTRACT CLAUSE "DEWATERING CONSUMPTIVE USE PERMIT." THE CONTRACTOR SHALL NOT EXCEED 300,000 GALLONS PER DAY AND SHALL NOT EXCEED 30 DAYS DURATION FOR DEWATERING ACTIVITIES. IF THE CONTRACTOR WILL EXCEED THIS, THEY SHALL OBTAIN APPROVAL FROM THE CONTRACTING OFFICER 14 DAYS PRIOR TO EXCEEDING THE LIMIT OF THE PERMIT. ALL WATER DISCHARGED TO GRADE MUST NOT ENTER SURFACE WATERS. EFFLUENT MUST BE DISCHARGED TO A PERVIOUS SURFACE TO FACILITATE INFILTRATION BACK INTO THE GROUND.

24. THE CONTRACTOR SHALL LOCATE AND PROTECT, BRACE, SHORE, OR OTHERWISE SUPPORT EXISTING THRUST BLOCKS TO MAINTAIN ADEQUATE THRUST RESTRAINT ON WATER MAINS TO REMAIN DURING CONSTRUCTION, AND REPAIR AND RESTORE ALL THRUST BLOCKS TO REMAIN. SEE DETAIL 2/C202

25. SILT FENCE AND FLOATING TURBITITY BARRIERS SHOWN IN THE DRAWINGS ARE SUGGESTED LOCATIONS. CONTRACTOR TO DETERMINE SPECIFIC EROSION AND SEDIMENT CONTROL MEASURES WITHIN THEIR OWN STORMWATER POLLUTION PREVENTION PLAN.

SYM	ZONE		DATE	APPD
A		THIS SHEET REVISED IN ITS ENTIRETY	05.14.14	

REVISIONS

JONES EDMUNDS
730 NE WALDO ROAD, GAINESVILLE, FLORIDA 32641 / (352) 377-5821
3910 S WASHINGTON AVE, SUITE 210, TITUSVILLE, FLORIDA 32780 / (321) 269-2950

SIGNATURES	DATE
DRAWN P. UPSTILL	12.18.13
CHECKED M. O'BRIEN	12.18.13
SUBMITTED: ARCHENG OF RECORD W. NICKEL	12.18.13
ST of LICENSURE: FL LICENSE NO: 68638	12.18.13
APPROVED R. KOLLER	12.18.13
K. MILLER	12.19.13

NATIONAL AERONAUTICS AND SPACE ADMINISTRATION
JOHN F. KENNEDY SPACE CENTER, NASA
KENNEDY SPACE CENTER, FLORIDA

KSC CENTRAL CAMPUS
REPLACEMENT HEADQUARTERS BUILDING
OFF SITE UTILITIES

GENERAL NOTES

C001

FILE NO.	SIZE	DWG. NO.	
C-12070.00	F	79K39624	A

PCN. NO. 98745/98745.1a/98745.2a SHEET 3

FILE: N:\08030 Hunton Brady\001-02 Central Campus HQ\04 Contract Drawings\Cont\4-08030001G01.dwg PRINTED: 5/12/2014 10:33 AM, BY USER: Jon Allen LAST MODIFIED: 5/12/2014 10:24 AM, BY USER: jpsen

NOTICE: When Government drawings, specifications, or other data are used for any purpose other than in connection with a definitely related Government procurement operation, the United States Government thereby incurs no responsibility nor obligation whatsoever; and the fact that the Government may have formulated, furnished, or in any way supplied the said drawings, specifications or other data is not to be regarded by implication or otherwise as in any manner licensing the holder or any other person or corporation, or conveying any rights or permission to manufacture, use, or sell any patented invention that may in any way be related thereto.

LEGEND

- P-X — STORM PIPING W/ PIPE DESIGNATION
- NEW SANITARY MANHOLE
- WM — WATER MAIN ROUTING
- SAN — SANITARY SEWER ROUTING WITH FLOW DIRECTION
- NG — NATURAL GAS ROUTING
- UGE — UNDERGROUND ELECTRICAL ROUTING
- CW — CHILLED WATER (SUPPLY & RETURN) ROUTING
- COM — COMMUNICATIONS ROUTING
- MATCH LINE
- DETAIL AREA
- NO DEWATERING BOUNDARY
- S-X — DRAINAGE INLET W/ STRUCTURE DESIGNATION
- BOLLARD
- REMOVABLE BOLLARD
- STORMWATER FLOW PATTERN
- ASPHALT PAVEMENT
- CONCRETE SIDEWALK
- CONTRAST COLOR CONCRETE
- FIRE TRUCK ACCESS
- FILL EXISTING DEPRESSIONAL AREA TO GRADE
- SF — SILT FENCE
- O — FLOATING TURBIDITY BARRIER PER FDOT INDEX 103
- FIRE HYDRANT
- VALVE
- EXISTING STORMWATER FLOW PATTERN
- S-X — TYPE J DITCH BOTTOM INLET W/ STRUCTURE DESIGNATION
- S-X — TYPE 9 CURB INLET W/ STRUCTURE DESIGNATION
- S-X — MITERED END SECTION W/ STRUCTURE DESIGNATION
- SANITARY LIFT STATION
- C102 — PLAN FUNCTION CODE DESIGNATION
- GRAVEL
- SOD
- RIPRAP
- LIMEROCK
- REMOVE EXISTING TREE
- DEMOLISH EXISTING PAVEMENT, STRUCTURE, UTILITY, OR PAVEMENT MARKING
- UTILITY CONFLICT
- ASPHALT/CONCRETE RESTORATION
- DOUBLE CHECK BACKFLOW PREVENTER
- REDUCER PRESSURE BACKFLOW PREVENTER
- DITCH CLEANING

EXISTING CONDITIONS LEGEND

- EXISTING WOOD LINE
- EXISTING FENCELINE
- EXISTING PAVEMENT STRIPING (WHITE OR YELLOW DASHED)
- EXISTING PAVEMENT STRIPING (YELLOW OR BLUE SOLID)
- EXISTING UNDERGROUND UNKNOWN UTILITY
- UGW — EXISTING WATER MAIN
- STORM SEWER
- SAN — EXISTING SANITARY SEWER
- SFM — EXISTING SANITARY FORCE MAIN
- NG — EXISTING NATURAL GAS
- UGE — EXISTING UNDERGROUND ELECTRICAL
- UGCW — EXISTING CHILLED WATER
- STM — EXISTING STEAM SYSTEM
- UGT — EXISTING UNDERGROUND TELEPHONE
- COM — EXISTING UNDERGROUND COMMUNICATIONS LINE
- CPA — EXISTING COMPRESSED AIR
- STS — EXISTING STEAM SYSTEM
- CA — EXISTING COMPRESSED AIR
- AIR — EXISTING COMPRESSED AIR

EXISTING CONDITION SYMBOLS

- = BACK-FLOW PREVENTER
- = BENCHMARK
- = BOLLARD
- = BORING
- = CURB INLET, STORM GRATE
- = CONCRETE LIGHT POLE
- = CLEAN-OUT (SANITARY)
- = CONCRETE POWER POLE
- = ELECTRIC MARKER
- = ELECTRIC BOX
- = ELECTRIC HANDHOLE
- = ELECTRIC METER
- = ELECTRIC MANHOLE
- = ELECTRIC TRANSFORMER
- = FIRE DEPARTMENT CONNECTION
- = FIRE METER
- = FIBER OPTIC CABLE MARKER
- = FIBER OPTIC CABLE HANDHOLE
- = GAS MARKER
- = GAS METER
- = GUY
- = GAS VALVE
- = UTILITIES LOCATION BY GROUND PENETRATING RADAR
- = HYDRANT
- = INDICATOR VALVE
- = LIGHT POLE
- = MANHOLE, UNKNOWN
- = MANHOLE, SANITARY SEWER
- = MANHOLE, STORM SEWER
- = MONITORING WELL
- = STORM GRATE
- = SIGN
- = SEWER VALVE
- = SOFTDIG
- = SPRINKLER HEAD
- = TELEPHONE HANDHOLE
- = TELEPHONE BOX
- = TELEPHONE MARKER
- = TELEPHONE MANHOLE
- = TELEPHONE PEDESTAL
- = TRAFFIC SIGNAL BOX
- = TRAFFIC SIGNAL
- = UTILITY BLOW-OFF
- = WATER MARKER
- = WATER METER
- = WATER SPIGOT
- = WATER VALVE
- = WELL
- = WOOD POWER POLE
- = EXISTING TREES

DETAIL DESIGNATION

1 / C102 — DETAIL DESIGNATION; DRAWING NUMBER DETAIL APPEARS ON OR IS CUT ON

● INDICATES DETAIL IS REFERENCED ON MORE THAN ONE PAGE

SECTION DESIGNATION

1 / C102 — DIRECTION OF SECTION; SECTION DESIGNATION; DRAWING NUMBER SECTION APPEARS ON

SECTION DESIGNATION

1 1 — INDICATES ONE OR MORE SECTIONS CUT AND SHOWN ON THE SAME DETAIL

ABBREVIATIONS

AC	ASBESTOS CEMENT
ACI	AMERICAN CONCRETE INSTITUTE
ACOE	ARMY CORPS OF ENGINEERS
AD	ALGEBRAIC DIFFERENCE
AIP	ABANDON IN PLACE
ASPH	ASPHALT
ASTM	AMERICAN SOCIETY FOR TESTING AND MATERIALS
AT/FP	ANTI-TERRORISM/FORCE PROTECTION
AWWA	AMERICAN WATER WORKS ASSOCIATION
BFP	BACK FLOW PREVENTER
BLDG	BUILDING
BLS	BELOW GROUND SURFACE
BMP	BEST MANAGEMENT PRACTICES
BOT	BOTTOM
BVCE	BEGIN VERTICAL CURVE ELEVATION
BVCS	BEGIN VERTICAL CURVE STATION
BW	BARBED WIRE
C/L	CENTERLINE
CBS	CONCRETE BLOCK STRUCTURE
CHD	CHORD
CI	CAST IRON
CLF	CHAIN LINK FENCE
CLS	CENTERLINE OF SWALE
CMP	CORRUGATED METAL PIPE
COMM	COMMUNICATION
CONC	CONCRETE
COND	CONDITION
CONT	CONTINUED
CPT	CATHODIC PROTECTION TESTING
CSWY	CAUSEWAY
D/S	DOWNSTREAM
DBI	DITCH BOTTOM INLET
DI	DUCTILE IRON
DIP	DUCTILE IRON PIPE
DWG	DRAWING
E	EAST
EF	EACH FACE
EL	ELEVATION
ELEV	ELEVATION
EOP	EDGE OF PAVEMENT
EOW	EDGE OF WATER
ERCP	ELLIPTICAL REINFORCED CONCRETE PIPE
ETC	ETCETERA
EVCE	END VERTICAL CURVE ELEVATION
EVCS	END VERTICAL CURVE STATION
EW	EACH WAY
EX	EXISTING
EXIST	EXISTING
F	GENERATOR FUEL TANK
FAC	FLORIDA ADMINISTRATIVE CODE
FDEP	FLORIDA DEPARTMENT OF ENVIRONMENTAL PROTECTION
FDOT	FLORIDA DEPARTMENT OF TRANSPORTATION
FFE	FINISHED FLOOR ELEVATION
FJ	FLANGED JOINT
FND	FOUND
FT	FEET
FWC	FISH & WILDLIFE COMMISSION
G	GENERATOR
GPR	GROUND PENETRATING RADAR
GV	GATE VALVE
H	HORIZONTAL
H/C	HANDICAP
HDPE	HIGH DENSITY POLYETHYLENE
HP	HIGH POINT
HW	HEADWALL
ID	IDENTIFICATION
IN	INCH
INCL	INCLUDING
INDEX	STANDARD INDEX, FLORIDA DEPARTMENT OF TRANSPORTATION STANDARD INDEX
INFO	INFORMATION
INV	INVERT
KSC	KENNEDY SPACE CENTER
L	LENGTH, CURVE LENGTH
LBR	LIMEROCK BEARING RATIO
LBS/FT	POUNDS PER LINEAR FOOT
LIDAR	LIGHT DETECTION AND RANGING
LP	LOW POINT
LT	LEFT
MAX	MAXIMUM
MES	MITERED END SECTION
MH	MANHOLE
MIN	MINIMUM
MPH	MILES PER HOUR
MUTCD	MANUAL ON UNIFORM TRAFFIC CONTROL DEVICES
N	NORTH
N/A	NOT APPLICABLE
NASA	NATIONAL AERONAUTICS AND SPACE ADMINISTRATION
NIC	NOT IN CONTRACT
NO	NUMBER
NTS	NOT TO SCALE
O & C	OPERATIONS AND CHECKOUT BUILDING
OC	ON CENTER
OSHA	OCCUPATIONAL SAFETY AND HEALTH ADMINISTRATION
PCB	POLYCHLORINATED BIPHENYLS
PED	PEDESTRIAN
PI	POINT OF INTERSECTION
POV	PRIVATELY OWNED VEHICLE
PSF	POUNDS PER SQUARE FOOT
PSI	POUNDS PER SQUARE INCH
PV	PLUG VALVE
PVC	POLYVINYL CHLORIDE
PVI	POINT OF VERTICAL INTERSECTION
R	RADIUS
RCP	REINFORCED CONCRETE PIPE
RT	RIGHT
S	SOUTH
S/W	SIDEWALK
SE	SOUTHEAST
SI	STANDARD INDEX, FLORIDA DEPARTMENT OF TRANSPORTATION STANDARD INDEX
SJRWMD	SAINT JOHNS RIVER WATER MANAGEMENT DISTRICT
SS	STAINLESS STEEL
STA	STATION
STBLZ	STABILIZED
STD	STANDARD
STRY	STORY
SWJ	SOLVENT WELD JOINT
SWMU	SOLID WASTE MANAGEMENT UNIT
SWPPP	STORMWATER POLLUTION PREVENTION PLAN
T	TRANSFORMER
TAN	TANGENT
TCLP	TOXICITY CHARACTERISTIC LEACHING PROCEDURE
TOB	TOP OF BANK
TOE	TOE OF SLOPE
TRAV	TRAVERSE
TYP	TYPICAL
U/S	UPSTREAM
UGE	UNDERGROUND ELECTRIC
UNO	UNLESS NOTED OTHERWISE
USACE	ARMY CORPS OF ENGINEERS
V	VERTICAL
VCP	VITRIFIED CLAY PIPE
VOL	VOLUME
W	WEST , WIDTH
W/	WITH
WM	WATERMAIN
WWF	WELDED WIRE FABRIC
WWM	WELDED WIRE MESH
XING	CROSSING

SYM	ZONE	REVISIONS	DATE	APPD
A		REDRAWN-NO CHANGES	05.14.14	

JONES EDMUNDS
730 NE WALDO ROAD, GAINESVILLE, FLORIDA 32641 / (352) 377-5821
3910 S WASHINGTON AVE, SUITE 210, TITUSVILLE, FLORIDA 32780 / (321) 269-2950

SIGNATURES	DATE
DRAWN P. UPSTILL	12.18.13
CHECKED M. O'BRIEN	12.18.13
SUBMITTED: ARCHENG OF RECORD W. NICKEL	12.18.13
ST of LICENSURE: FL LICENSE NO: 68638	12.18.13
APPROVED R. KOLLER	12.18.13
K. MILLER	12.19.13

NATIONAL AERONAUTICS AND SPACE ADMINISTRATION
JOHN F. KENNEDY SPACE CENTER, NASA
KENNEDY SPACE CENTER, FLORIDA

KSC CENTRAL CAMPUS
REPLACEMENT HEADQUARTERS BUILDING
OFF SITE UTILITIES

LEGEND AND ABBREVIATIONS

C002

FILE NO.	SIZE	DWG. NO.	
C-12070.00	F	79K39624	A
PCN. NO. 98745/98745.1a/98745.2a		SHEET 4	

NOTICE: When Government drawings, specifications, or other data are used for any purpose other than in connection with a definitely related Government procurement operation, the United States Government thereby incurs no responsibility nor obligation whatsoever; and the fact that the Government may have formulated, furnished, or in any way supplied the said drawings, specifications or other data is not to be regarded by implication or otherwise as in any manner licensing the holder or any other person or corporation, or conveying any rights or permission to manufacture, use, or sell any patented invention that may in any way be related thereto.

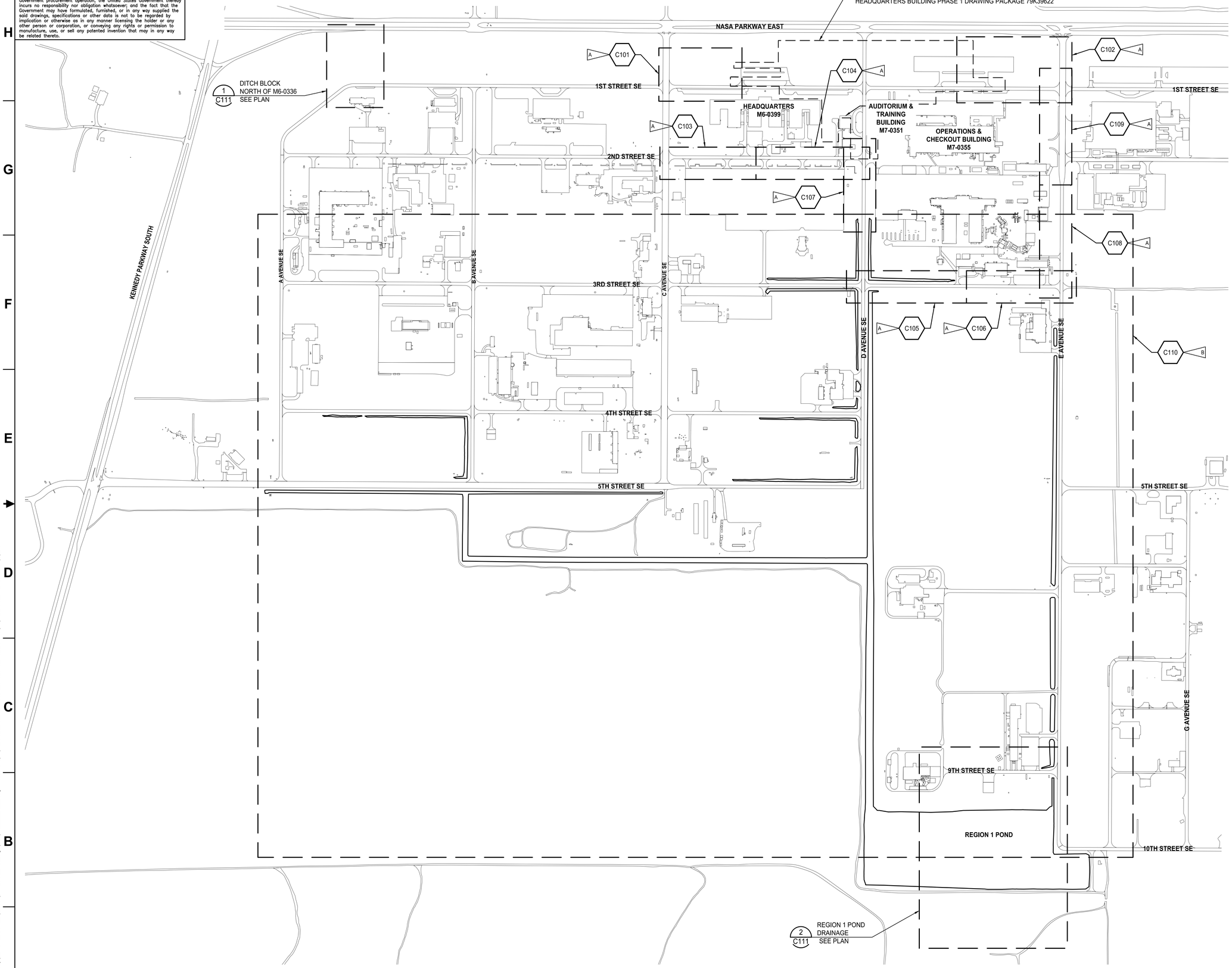

NOTES

A — SEE PLAN AND PROFILE SHEET FOR LOCATION-SPECIFIC STORMWATER POLLUTION PREVENTION MEASURES.

B — SEE DWG #### FOR STORMWATER POLLUTION PREVENTION MEASURES.

GRAPHIC SCALE

0 150 300 600 900

SCALE IN FEET
1" = 300'

N

SYM	ZONE		DATE	APPD
A		REDRAWN-NO CHANGES	05.14.14	

REVISIONS

JONES EDMUNDS
730 NE WALDO ROAD, GAINESVILLE, FLORIDA 32641 / (352) 377-5821
3910 S WASHINGTON AVE, SUITE 210, TITUSVILLE, FLORIDA 32780 / (321) 269-2950

SIGNATURES	DATE
DRAWN P. UPSTILL	12.18.13
CHECKED M. O'BRIEN	12.18.13
SUBMITTED: ARCHENG OF RECORD W. NICKEL	12.18.13
ST of LICENSURE: FL LICENSE NO: 68638	12.18.13
APPROVED R. KOLLER	12.18.13
K. MILLER	12.19.13

NATIONAL AERONAUTICS AND SPACE ADMINISTRATION
JOHN F. KENNEDY SPACE CENTER, NASA
KENNEDY SPACE CENTER, FLORIDA

KSC CENTRAL CAMPUS
REPLACEMENT HEADQUARTERS BUILDING
OFF SITE UTILITIES

KEY MAP

C003

FILE NO.	SIZE	DWG. NO.	
C-12070.00	F	79K39624	A
PCN. NO. 98745/98745.1a/98745.2a	SHEET 5		

KSC FORM 1-11 (3/76)(C/G 3/94)

FILE: R:\V8850\Hunton Brady\UXI-02 Central Campus HQ\04 Contract Drawings\Civil\4-U89500001C003.dwg PRINTED: 5/12/2014 10:53 AM, BY USER: Jon Allen LAST MODIFIED: 12/19/2013 12:13 PM, BY USER: pupstil

NOTICE: When Government drawings, specifications, or other data are used for any purpose other than in connection with a definitely related Government procurement operation, the United States Government thereby incurs no responsibility nor obligation whatsoever; and the fact that the Government may have formulated, furnished, or in any way supplied the said drawings, specifications or other data is not to be regarded by implication or otherwise as in any manner licensing the holder or any other person or corporation, or conveying any rights or permission to manufacture, use, or sell any patented invention that may in any way be related thereto.

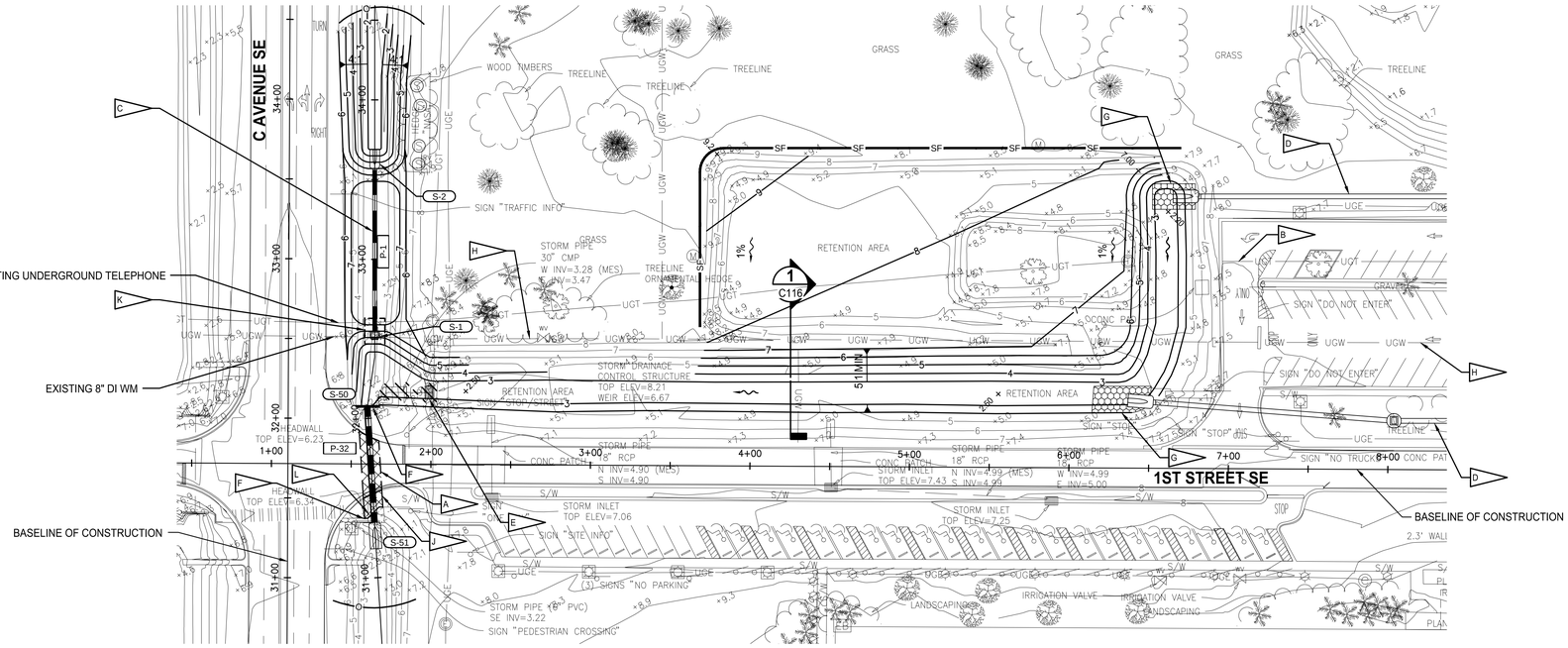

1ST STREET DITCH PLAN

1"=40'

NOTES

- A — ASPHALT PAVEMENT RESTORATION. SEE DETAIL 2/C201
- B — 4x2 COMMUNICATIONS DUCT BANK SHALL NOT BE DISTURBED
- C — TYPICAL UTILITY TRENCH. SEE DETAIL 1/C202
- D — STORMWATER PIPE (SEE KSC CENTRAL CAMPUS REPLACEMENT HEADQUARTERS BUILDING PHASE 1 DRAWING PACKAGE - 79K39622 VOL 1)
- E — APPROX 24 LF 30" CMP, MES, AND APPROX 5'x8'x6' DEEP CONCRETE STRUCTURE TO BE DEMOLISHED
- F — 1'x15'x 6' HIGH HEADWALL TO BE DEMOLISHED
- G — 16'x26'x18" DEEP FDOT ITEM 530 RIPRAP (RUBBLE) WITH GEOTEXTILE
- H — 8" AC WM AIP PER DWG PACKAGE 79K38877 VOL 1
- J — CONCRETE SIDEWALK RESTORATION. SEE DETAIL 5/C201
- K — UTILITY CONFLICT. SEE DETAIL 1/C203
- L — 73 LF STORM PIPE TO BE DEMOLISHED

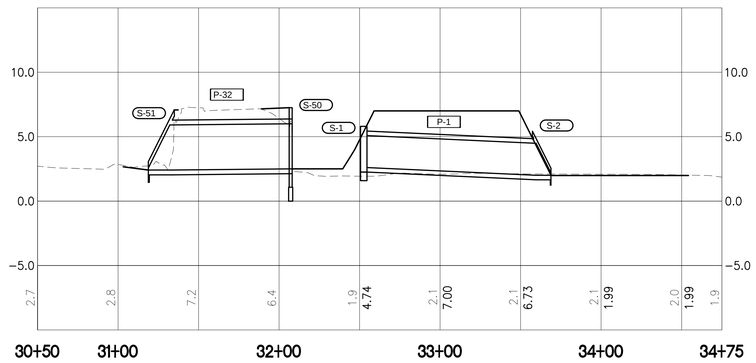

C AVENUE DITCH PROFILE

1"=40' H
1"=5' V

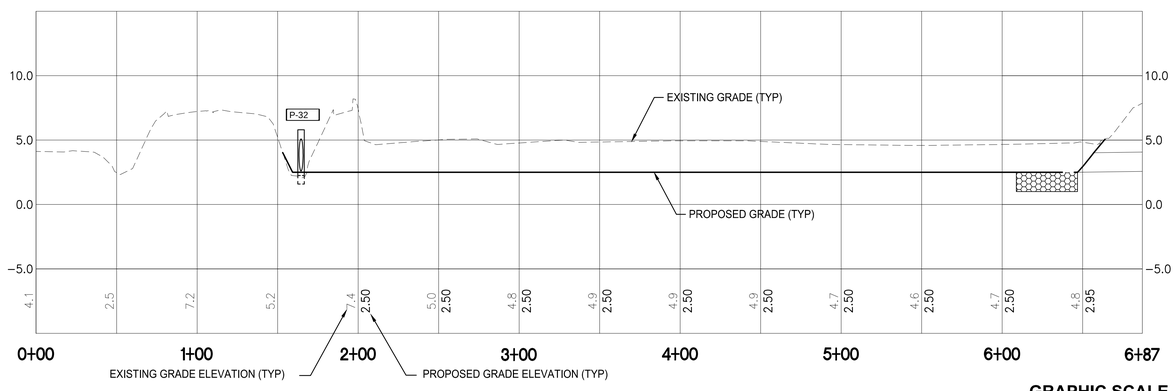

1ST STREET DITCH PROFILE

1"=40' H
1"=5' V

GRAPHIC SCALE 0 20 40 80 120 — SCALE IN FEET 1" = 40' H

GRAPHIC SCALE 0 2.5 5 10 20 — SCALE IN FEET 1" = 5' V

N

SYM	ZONE		DATE	APPD
A		REDRAWN-NO CHANGES	05.14.14	

REVISIONS

JONES EDMUNDS
730 NE WALDO ROAD, GAINESVILLE, FLORIDA 32641 / (352) 377-5821
3910 S WASHINGTON AVE, SUITE 210, TITUSVILLE, FLORIDA 32780 / (321) 269-2950

SIGNATURES	DATE
DRAWN P. UPSTILL	12.18.13
CHECKED M. O'BRIEN	12.18.13
SUBMITTED: ARCHENG OF RECORD W. NICKEL	12.18.13
ST of LICENSURE: FL LICENSE NO: 68638	12.18.13
APPROVED R. KOLLER	12.18.13
K. MILLER	12.19.13

NATIONAL AERONAUTICS AND SPACE ADMINISTRATION
JOHN F. KENNEDY SPACE CENTER, NASA
KENNEDY SPACE CENTER, FLORIDA

KSC CENTRAL CAMPUS
REPLACEMENT HEADQUARTERS BUILDING
OFF SITE UTILITIES

1ST STREET AND C AVE DITCH PLAN AND PROFILE

FILE NO.	SIZE	DWG. NO.	
C-12070.00	F	79K39624	A
PCN. NO. 98745/98745.1a/98745.2a		SHEET 6	

C101

FILE: K:\D8500 Hunton Brady\U01-12 Central Campus Rq\U04 Contract Drawings\Civil\4-D8500UO1C101.dwg PRINTED: 5/12/2014 10:34 AM, BY USER: Jon Allen LAST MODIFIED: 12/19/2013 12:03 PM, BY USER: puppstil

KSC FORM 1-11 (3/76)(C/G 3/94)

NOTICE: When Government drawings, specifications, or other data are used for any purpose other than in connection with a definitely related Government procurement operation, the United States Government thereby incurs no responsibility nor obligation whatsoever; and the fact that the Government may have formulated, furnished, or in any way supplied the said drawings, specifications or other data is not to be regarded by implication or otherwise as in any manner licensing the holder or any other person or corporation, or conveying any rights or permission to manufacture, use, or sell any patented invention that may in any way be related thereto.

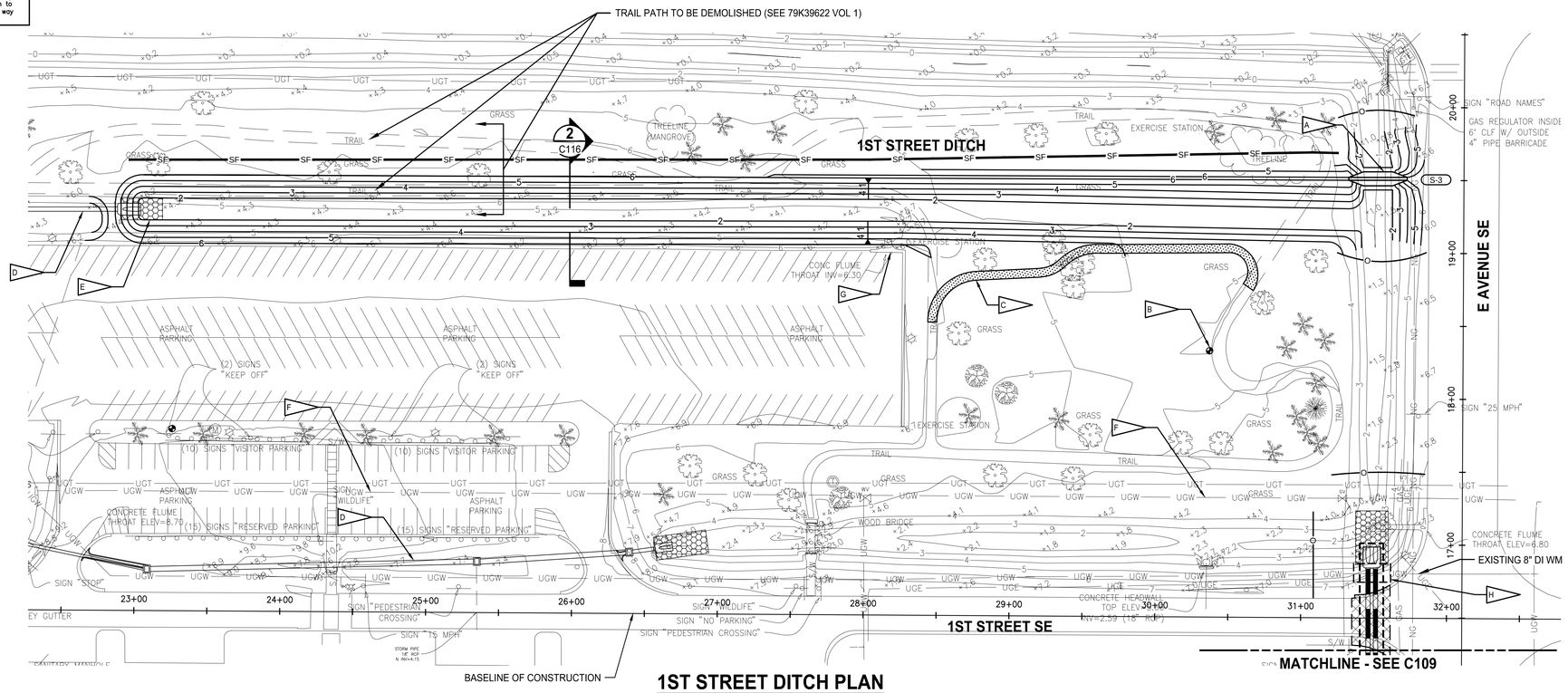

1ST STREET DITCH PLAN

1"=40'

NOTES

- A — DITCH BLOCK. SEE DETAIL 1/C115
- B — PROTECT GROUNDWATER MONITORING WELL DURING CONSTRUCTION OPERATIONS
- C — NEW TRAIL PATH TO BE 6' WIDE x 4" THICK LIMEROCK. DEMOLISH ALL TRAIL PATHS NORTH OF NEW TRAIL, BACKFILL TO MATCH EXISTING GRADE AND SOD
- D — STORMWATER PIPE (SEE KSC CENTRAL CAMPUS REPLACEMENT HEADQUARTERS BUILDING PHASE 1 DRAWING PACKAGE - 79K39622)
- E — 16'x36'x18" DEEP FDOT ITEM 530 RIPRAP (RUBBLE) WITH GEOTEXTILE
- F — 8" AC WM AIP PER DWG PACKAGE 79K38877 VOL 1
- G — FLUME RESTORATION. SEE DETAIL 1/C201
- H — UTILITY CONFLICT. SEE DETAIL 1/C203

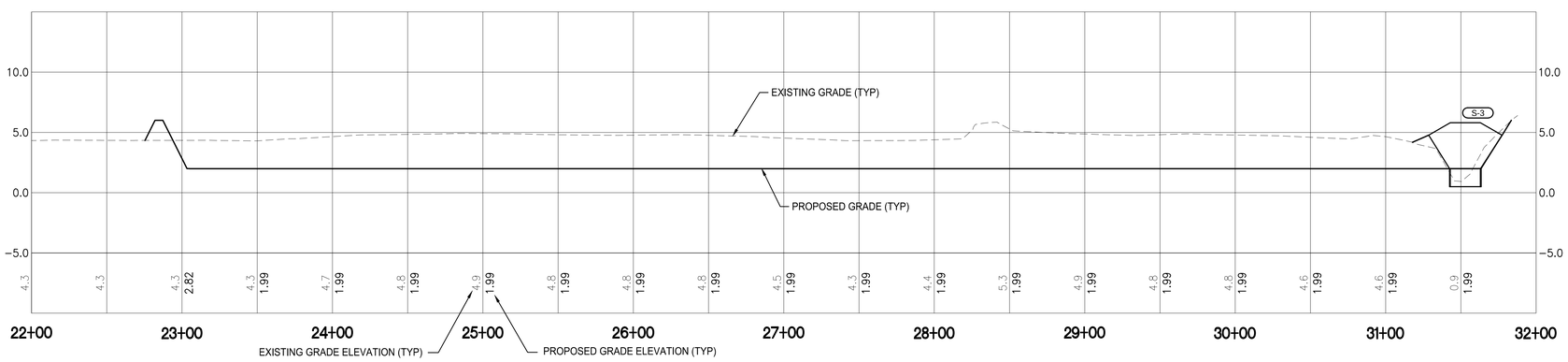

1ST STREET DITCH PROFILE

1"=40' H
1"=5' V

GRAPHIC SCALE — 0 20 40 80 120 — SCALE IN FEET 1" = 40' H

GRAPHIC SCALE — 0 2.5 5 10 20 — SCALE IN FEET 1" = 5' V

N

SYM	ZONE		DATE	APPD
A		REDRAWN-NO CHANGES	05.14.14	

REVISIONS

JONES EDMUNDS
730 NE WALDO ROAD, GAINESVILLE, FLORIDA 32641 / (352) 377-5821
3910 S WASHINGTON AVE, SUITE 210, TITUSVILLE, FLORIDA 32780 / (321) 269-2950

SIGNATURES	DATE
DRAWN P. UPSTILL	12.18.13
CHECKED M. O'BRIEN	12.18.13
SUBMITTED: ARCHENG OF RECORD W. NICKEL	12.18.13
ST of LICENSURE: FL LICENSE NO: 68638	12.18.13
APPROVED R. KOLLER	12.18.13
K. MILLER	12.19.13

NATIONAL AERONAUTICS AND SPACE ADMINISTRATION
JOHN F. KENNEDY SPACE CENTER, NASA
KENNEDY SPACE CENTER, FLORIDA

KSC CENTRAL CAMPUS
REPLACEMENT HEADQUARTERS BUILDING
OFF SITE UTILITIES

1ST STREET DITCH PLAN AND PROFILE

FILE NO.	SIZE	DWG. NO.	
C-12070.00	F	79K39624	A

PCN. NO. 98745/98745.1a/98745.2a — SHEET 7

C102

KSC FORM 1-11 (3/76)(C/G 3/94)

NOTICE: When Government drawings, specifications, or other data are used for any purpose other than in connection with a definitely related Government procurement operation, the United States Government thereby incurs no responsibility nor obligation whatsoever; and the fact that the Government may have formulated, furnished, or in any way supplied the said drawings, specifications or other data is not to be regarded by implication or otherwise as in any manner licensing the holder or any other person or corporation, or conveying any rights or permission to manufacture, use, or sell any patented invention that may in any way be related thereto.

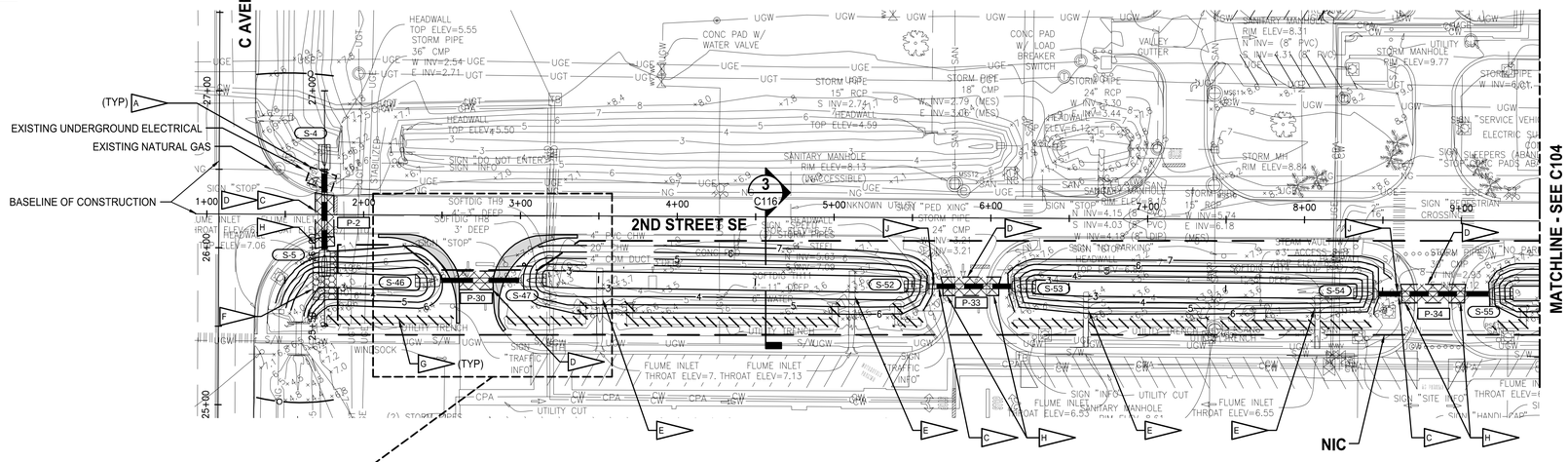

2ND STREET DITCH PLAN

1"=40'

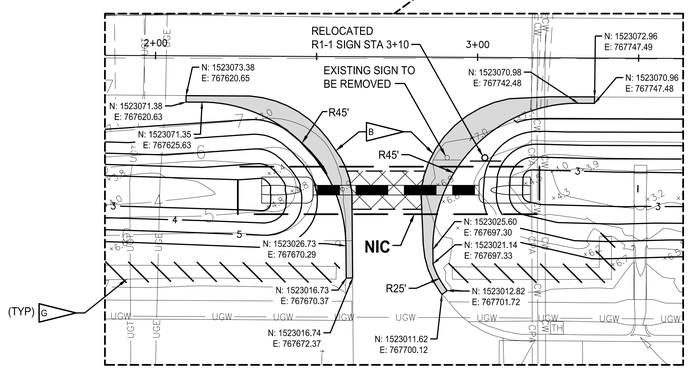

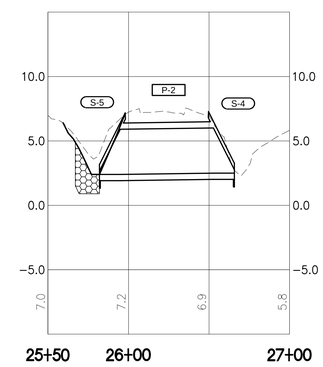

C AVENUE DITCH PROFILE

1"=40' H
1"=5' V

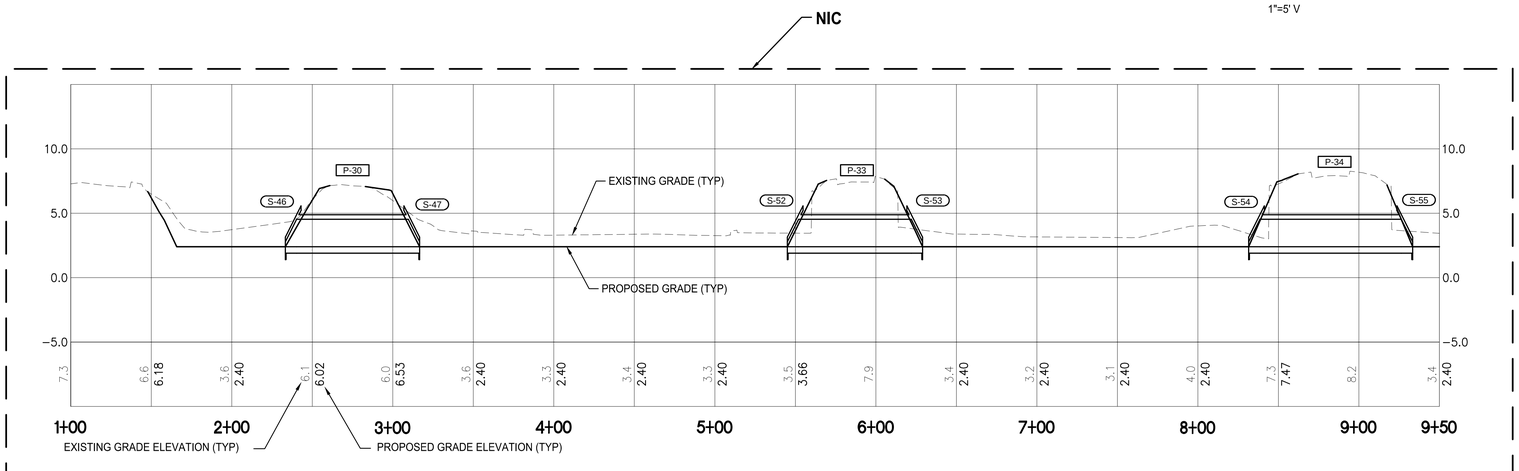

2ND STREET DITCH PROFILE

1"=40' H
1"=5' V

NOTES

- A — UTILITY CONFLICT. SEE DETAIL 1/C203
- B — ASPHALT PAVEMENT WIDENING. SEE DETAIL 3/C201
- C — TYPICAL UTILITY TRENCH. SEE DETAIL (TYP) 1/C202
- D — ASPHALT PAVEMENT RESTORATION. SEE DETAIL 2/C201
- NIC E — FLUME RESTORATION. SEE DETAIL 1/C201
- F — 16'x36'x18" DEEP FDOT ITEM 530 RIPRAP (RUBBLE) WITH GEOTEXTILE
- NIC G — DEMOLISH CONCRETE UTILITY TRENCH
- H — CONCRETE SIDEWALK RESTORATION. SEE DETAIL 5/C201
- NIC J — (2) CONCRETE HEADWALLS AND 53 LF STORM PIPE TO BE DEMOLISHED
- NIC K — (2) CONCRETE HEADWALLS AND 75 LF STORM PIPE TO BE DEMOLISHED

GRAPHIC SCALE 0 20 40 80 120 — SCALE IN FEET 1" = 40' H

GRAPHIC SCALE 0 2.5 5 10 20 — SCALE IN FEET 1" = 5' V

N

SYM	ZONE	REVISIONS	DATE	APPD
A		REDRAWN-NO CHANGES	05.14.14	

JONES EDMUNDS
730 NE WALDO ROAD, GAINESVILLE, FLORIDA 32641 / (352) 377-5821
3910 S WASHINGTON AVE, SUITE 210, TITUSVILLE, FLORIDA 32780 / (321) 269-2950

NATIONAL AERONAUTICS AND SPACE ADMINISTRATION
JOHN F. KENNEDY SPACE CENTER, NASA
KENNEDY SPACE CENTER, FLORIDA

KSC CENTRAL CAMPUS
REPLACEMENT HEADQUARTERS BUILDING
OFF SITE UTILITIES

2ND STREET DITCH PLAN AND PROFILE

SIGNATURES	DATE
DRAWN P. UPSTILL	12.18.13
CHECKED M. O'BRIEN	12.18.13
SUBMITTED: ARCHENG OF RECORD W. NICKEL	12.18.13
ST of LICENSURE: FL LICENSE NO: 68638	12.18.13
APPROVED R. KOLLER	12.18.13
K. MILLER	12.19.13

C103

FILE NO. C-12070.00 | SIZE F | DWG. NO. 79K39624 | A

PCN. NO. 98745/98745.1a/98745.2a | SHEET 8

NOTICE: When Government drawings, specifications, or other data are used for any purpose other than in connection with a definitely related Government procurement operation, the United States Government thereby incurs no responsibility nor obligation whatsoever; and the fact that the Government may have formulated, furnished, or in any way supplied the said drawings, specifications or other data is not to be regarded by implication or otherwise as in any manner licensing the holder or any other person or corporation, or conveying any rights or permission to manufacture, use, or sell any patented invention that may in any way be related thereto.

NOTES

- NIC (A) CONCRETE SIDEWALK RESTORATION. SEE DETAIL 5/C201
- NIC (B) FLUME RESTORATION. SEE DETAIL 1/C201
- (C) TYPICAL UTILITY TRENCH. SEE DETAIL (TYP) 1/C202
- (D) 5X2 VERTICALLY STACKED ELECTRICAL DUCTBANK SHALL NOT BE DISTURBED
- (E) ASPHALT PAVEMENT RESTORATION. SEE DETAIL 2/C201
- (F) STORMWATER PIPE (SEE KSC CENTRAL CAMPUS REPLACEMENT HEADQUARTERS BUILDING PHASE 1 DRAWING PACKAGE - 79K39622 VOL 1)
- (G) 30'x80'x18" DEEP FDOT ITEM 530 RIPRAP (RUBBLE) WITH GEOTEXTILE
- NIC (H) DEMOLISH CONCRETE UTILITY TRENCH
- (J) UNDERGROUND UTILITIES (SEE KSC CENTRAL CAMPUS REPLACEMENT HEADQUARTERS BUILDING PHASE 1 DRAWING PACKAGE - 79K39622)
- NIC (K) (2) CONCRETE HEADWALLS AND 55 LF STORM PIPE TO BE DEMOLISHED
- NIC (L) (2) CONCRETE HEADWALLS AND 55 LF STORM PIPE TO BE DEMOLISHED
- (M) 180 SYx18" DEEP FDOT ITEM 530 RIPRAP (RUBBLE) WITH GEOTEXTILE
- (N) UTILITY CONFLICT. SEE DETAIL 1/C203

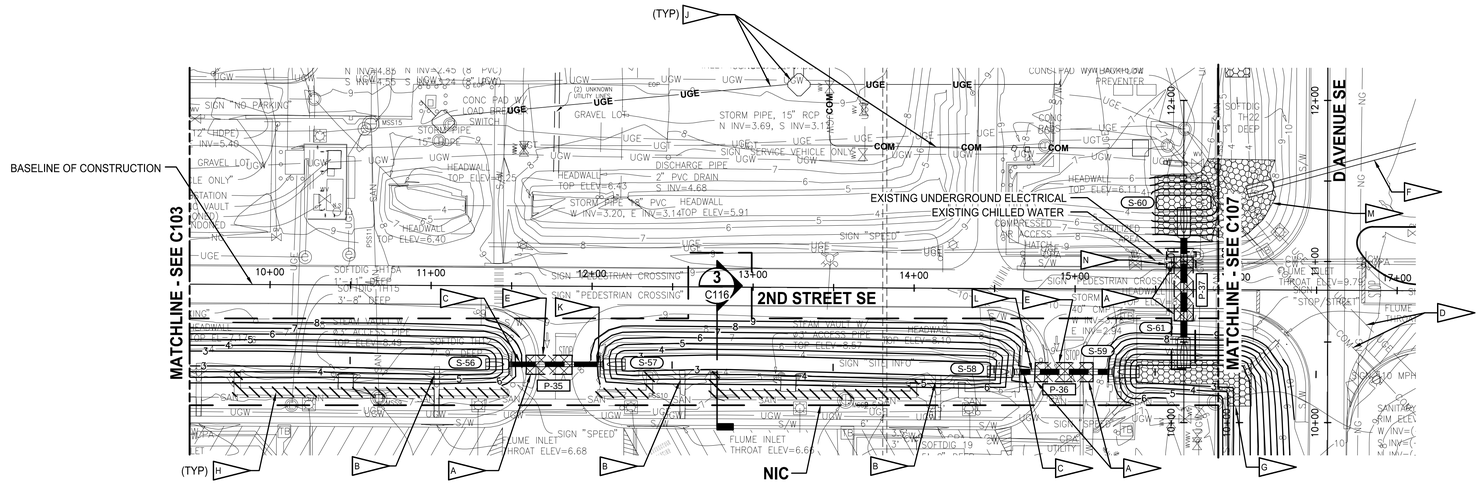

2ND STREET DITCH PLAN

1"=40'

NIC

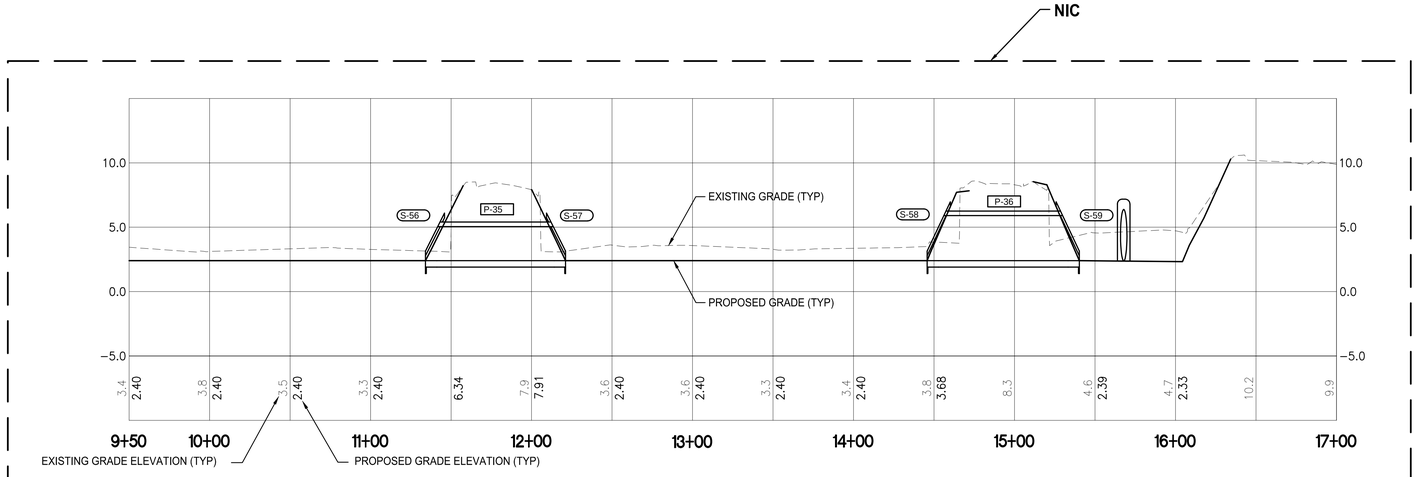

2ND STREET DITCH PROFILE

1"=40' H
1"=5' V

GRAPHIC SCALE
0 20 40 80 120
SCALE IN FEET
1" = 40' H

GRAPHIC SCALE
0 2.5 5 10 20
SCALE IN FEET
1" = 5' V

N

SYM	ZONE		DATE	APPD
A		REDRAWN-NO CHANGES.	05.14.14	

REVISIONS

JONES EDMUNDS
730 NE WALDO ROAD, GAINESVILLE, FLORIDA 32641 / (352) 377-5821
3910 S WASHINGTON AVE, SUITE 210, TITUSVILLE, FLORIDA 32780 / (321) 269-2950

NATIONAL AERONAUTICS AND SPACE ADMINISTRATION
JOHN F. KENNEDY SPACE CENTER, NASA
KENNEDY SPACE CENTER, FLORIDA

KSC CENTRAL CAMPUS
REPLACEMENT HEADQUARTERS BUILDING
OFF SITE UTILITIES

2ND STREET DITCH PLAN AND PROFILE

SIGNATURES	DATE
DRAWN P. UPSTILL	12.18.13
CHECKED M. O'BRIEN	12.18.13
SUBMITTED: ARCHENG OF RECORD W. NICKEL	12.18.13
ST of LICENSURE: FL LICENSE NO: 68638	12.18.13
APPROVED R. KOLLER	12.18.13
K. MILLER	12.19.13

C104

FILE NO. C-12070.00 | SIZE F | DWG. NO. 79K39624 | A
PCN. NO. 98745/98745.1a/98745.2a | SHEET 9

KSC FORM 1-11 (3/76)(C/G 3/94)

FILE: N:\98SJU Munton Brody\001-102 Central Campus HQ\UP4 Contract Drawings\Civil\4-DB3JU001C104.dwg PRINTED: 5/12/2014 10:38 AM, BY USER: Jon Allen LAST MODIFIED: 12/19/2013 12:15 PM, BY USER: pupstil

NOTICE: When Government drawings, specifications, or other data are used for any purpose other than in connection with a definitely related Government procurement operation, the United States Government thereby incurs no responsibility nor obligation whatsoever; and the fact that the Government may have formulated, furnished, or in any way supplied the said drawings, specifications or other data is not to be regarded by implication or otherwise as in any manner licensing the holder or any other person or corporation, or conveying any rights or permission to manufacture, use, or sell any patented invention that may in any way be related thereto.

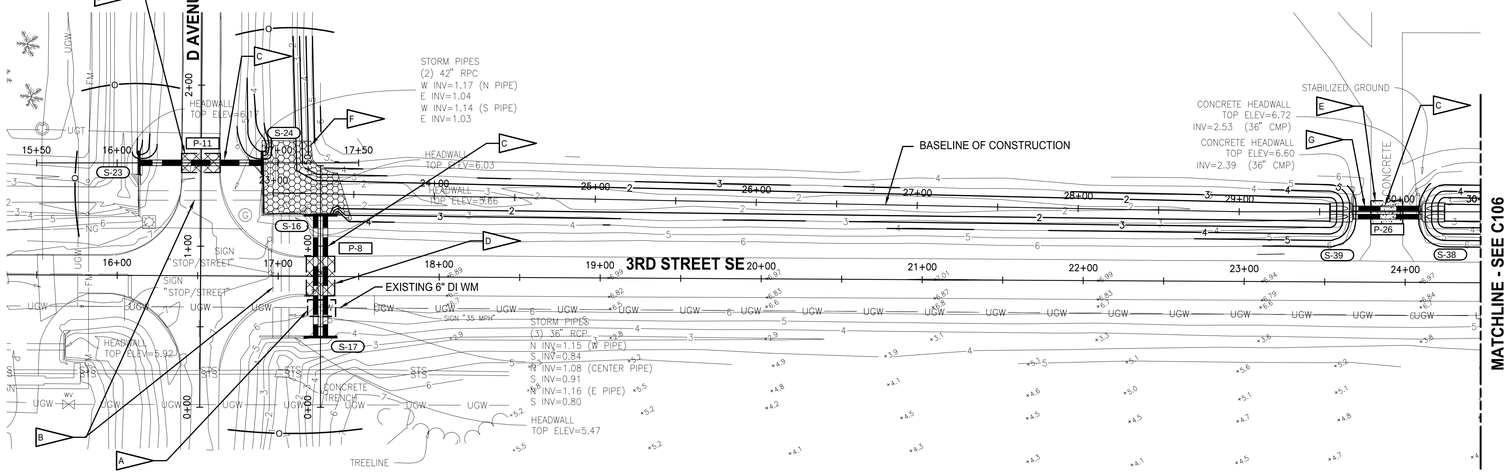

3RD STREET DITCH PLAN

1"=40'

NOTES

- A — UTILITY CONFLICT. SEE DETAIL 1/C203
- B — PIPES AND STRUCTURES TO REMAIN.
- C — TYPICAL UTILITY TRENCH. SEE DETAIL 1/C202
- D — ASPHALT PAVEMENT RESTORATION. SEE DETAIL 2/C201
- E — CONCRETE RESTORATION. SEE DETAIL 4/C201
- F — 150 SYx18" DEEP FDOT ITEM 530 RIPRAP (RUBBLE) WITH GEOTEXTILE
- G — (2) CONCRETE HEADWALLS AND 40 LF STORM PIPE TO BE DEMOLISHED

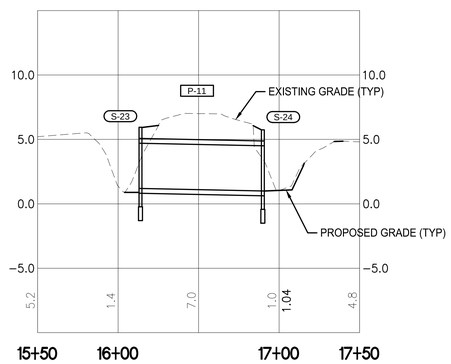

3RD STREET (P-11) PROFILE

1"=40' H
1"=5' V

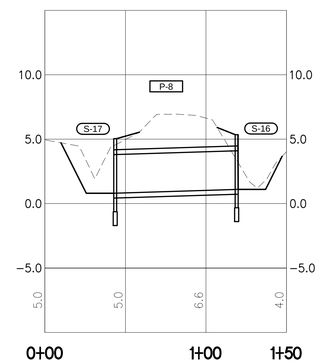

D AVENUE (P-8) PROFILE

1"=40' H
1"=5' V

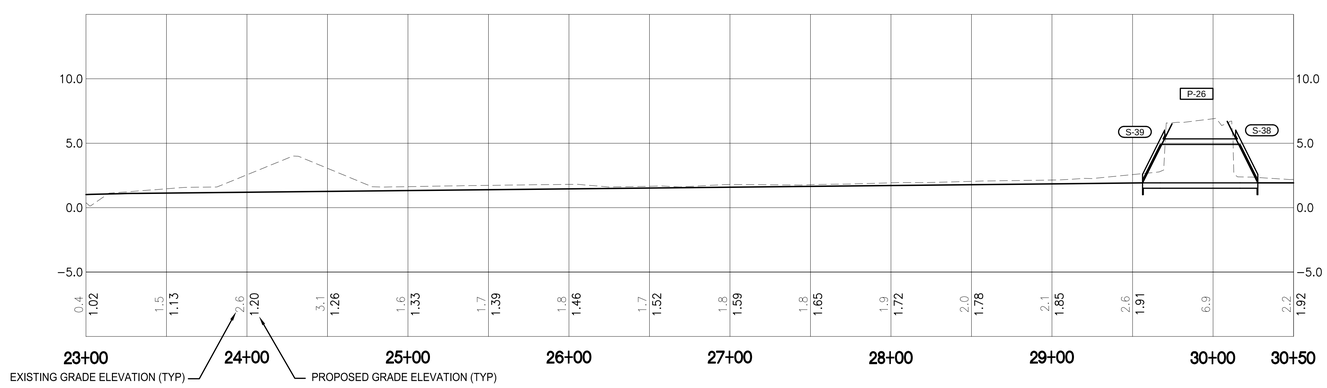

3RD STREET DITCH PROFILE

1"=40' H
1"=5' V

N

GRAPHIC SCALE
0 20 40 80 120
SCALE IN FEET
1" = 40' H

GRAPHIC SCALE
0 2.5 5 10 20
SCALE IN FEET
1" = 5' V

SYM	ZONE	REVISIONS	DATE	APPD
A		REDRAWN-NO CHANGES	05.14.14	

JONES EDMUNDS
730 NE WALDO ROAD, GAINESVILLE, FLORIDA 32641 / (352) 377-5821
3910 S WASHINGTON AVE, SUITE 210, TITUSVILLE, FLORIDA 32780 / (321) 269-2950

SIGNATURES	DATE
DRAWN P. UPSTILL	12.18.13
CHECKED M. O'BRIEN	12.18.13
SUBMITTED: ARCHENG OF RECORD W. NICKEL	12.18.13
ST of LICENSURE: FL LICENSE NO: 68638	12.18.13
APPROVED R. KOLLER	12.18.13
K. MILLER	12.19.13

NATIONAL AERONAUTICS AND SPACE ADMINISTRATION
JOHN F. KENNEDY SPACE CENTER, NASA
KENNEDY SPACE CENTER, FLORIDA

KSC CENTRAL CAMPUS
REPLACEMENT HEADQUARTERS BUILDING
OFF SITE UTILITIES

3RD STREET AND D AVE DITCH PLAN AND PROFILE

C105

FILE NO.	SIZE	DWG. NO.	
C-12070.00	F	79K39624	A
PCN. NO. 98745/98745.1a/98745.2a		SHEET 10	

NOTICE: When Government drawings, specifications, or other data are used for any purpose other than in connection with a definitely related Government procurement operation, the United States Government thereby incurs no responsibility nor obligation whatsoever; and the fact that the Government may have formulated, furnished, or in any way supplied the said drawings, specifications or other data is not to be regarded by implication or otherwise as in any manner licensing the holder or any other person or corporation, or conveying any rights or permission to manufacture, use, or sell any patented invention that may in any way be related thereto.

NOTES

- A — TYPICAL UTILITY TRENCH. SEE DETAIL 1/C202
- B — CONCRETE RESTORATION. SEE DETAIL 4/C201
- C — UTILITY CONFLICT. SEE DETAIL 1/C203
- D — 180 SYx18" DEEP FDOT ITEM 530 RIPRAP (RUBBLE) WITH GEOTEXTILE
- E — (2) CONCRETE MES AND 60 LF STORM PIPE TO BE DEMOLISHED
- F — (2) CONCRETE MES AND 60 LF STORM PIPE TO BE DEMOLISHED

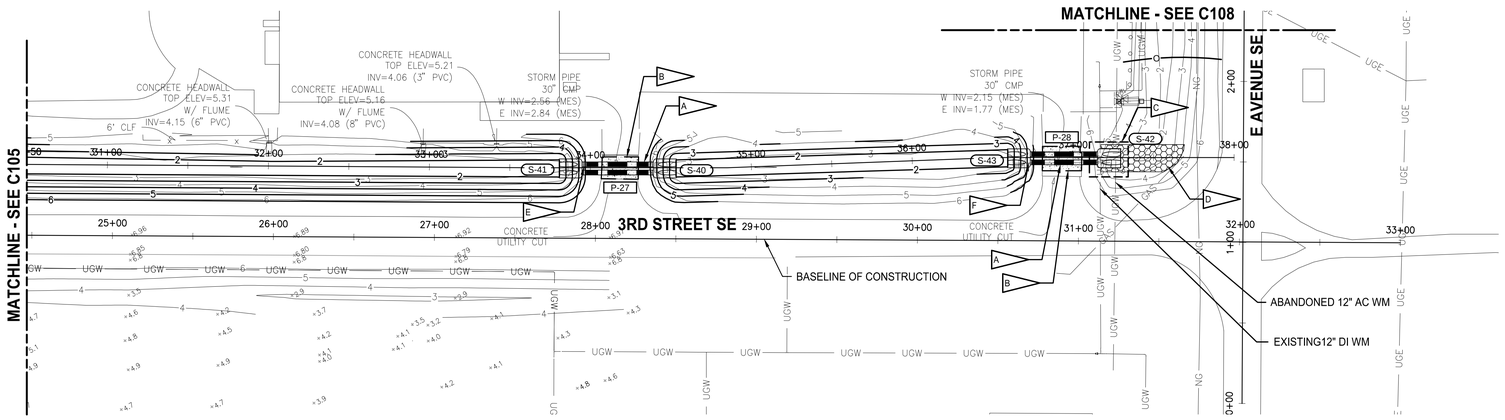

3RD STREET DITCH PLAN

1"=40'

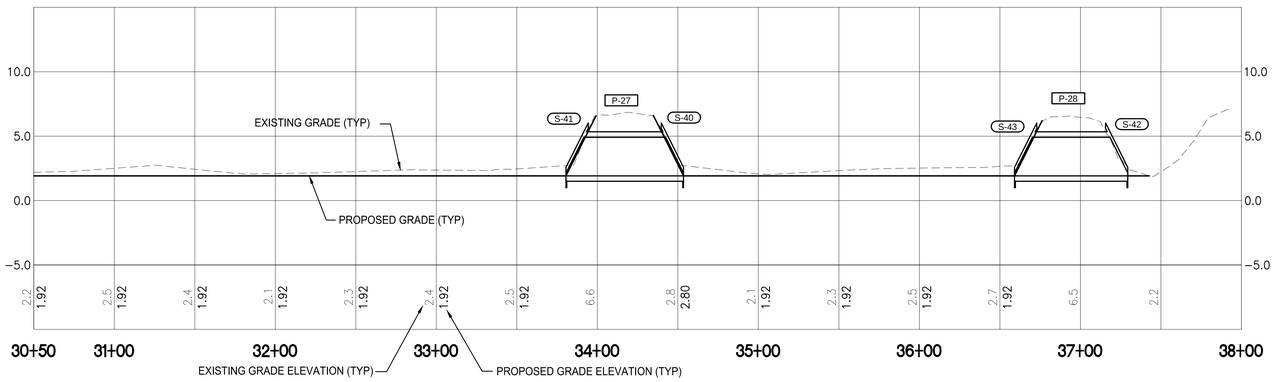

3RD STREET DITCH PROFILE

1"=40' H
1"=5' V

GRAPHIC SCALE 0 20 40 80 120 — SCALE IN FEET 1" = 40' H

GRAPHIC SCALE 0 2.5 5 10 20 — SCALE IN FEET 1" = 5' V

N

SYM	ZONE		DATE	APPD
A		REDRAWN-NO CHANGES	05.14.14	

REVISIONS

JONES EDMUNDS
730 NE WALDO ROAD, GAINESVILLE, FLORIDA 32641 / (352) 377-5821
3910 S WASHINGTON AVE, SUITE 210, TITUSVILLE, FLORIDA 32780 / (321) 269-2950

SIGNATURES	DATE
DRAWN P. UPSTILL	12.18.13
CHECKED M. O'BRIEN	12.18.13
SUBMITTED: ARCHENG OF RECORD W. NICKEL	12.18.13
ST of LICENSURE: FL LICENSE NO: 68638	12.18.13
APPROVED R. KOLLER	12.18.13
K. MILLER	12.19.13

NATIONAL AERONAUTICS AND SPACE ADMINISTRATION
JOHN F. KENNEDY SPACE CENTER, NASA
KENNEDY SPACE CENTER, FLORIDA

KSC CENTRAL CAMPUS
REPLACEMENT HEADQUARTERS BUILDING
OFF SITE UTILITIES

3RD STREET DITCH PLAN AND PROFILE

FILE NO.	SIZE	DWG. NO.	
C-12070.00	F	79K39624	A

PCN. NO. 98745/98745.1a/98745.2a SHEET 11

C106

KSC FORM 1-11 (3/76)(C/G 3/94)

NOTICE: When Government drawings, specifications, or other data are used for any purpose other than in connection with a definitely related Government procurement operation, the United States Government thereby incurs no responsibility nor obligation whatsoever; and the fact that the Government may have formulated, furnished, or in any way supplied the said drawings, specifications or other data is not to be regarded by implication or otherwise as in any manner licensing the holder or any other person or corporation, or conveying any rights or permission to manufacture, use, or sell any patented invention that may in any way be related thereto.

NOTES

- A — UTILITY CONFLICT. SEE DETAIL 1/C203
- B — 5X2 VERTICALLY STACKED ELECTRICAL DUCT BANK SHALL NOT BE DISTURBED.
- C — TYPICAL UTILITY TRENCH. SEE DETAIL 1/C202
- D — ASPHALT PAVEMENT RESTORATION. SEE DETAIL 2/C201
- NIC E — CONCRETE SIDEWALK RESTORATION. SEE DETAIL 5/C201
- NIC F — FLUME RESTORATION. SEE DETAIL 1/C201
- G — STORMWATER PIPE (SEE KSC CENTRAL CAMPUS REPLACEMENT HEADQUARTERS BUILDING PHASE 1 DRAWING PACKAGE - 79K39622 VOL 1)
- H — 180 SYx18" DEEP FDOT ITEM 530 RIPRAP (RUBBLE) WITH GEOTEXTILE
- J — (2) CONCRETE MES AND 68 LF STORM PIPE TO BE DEMOLISHED

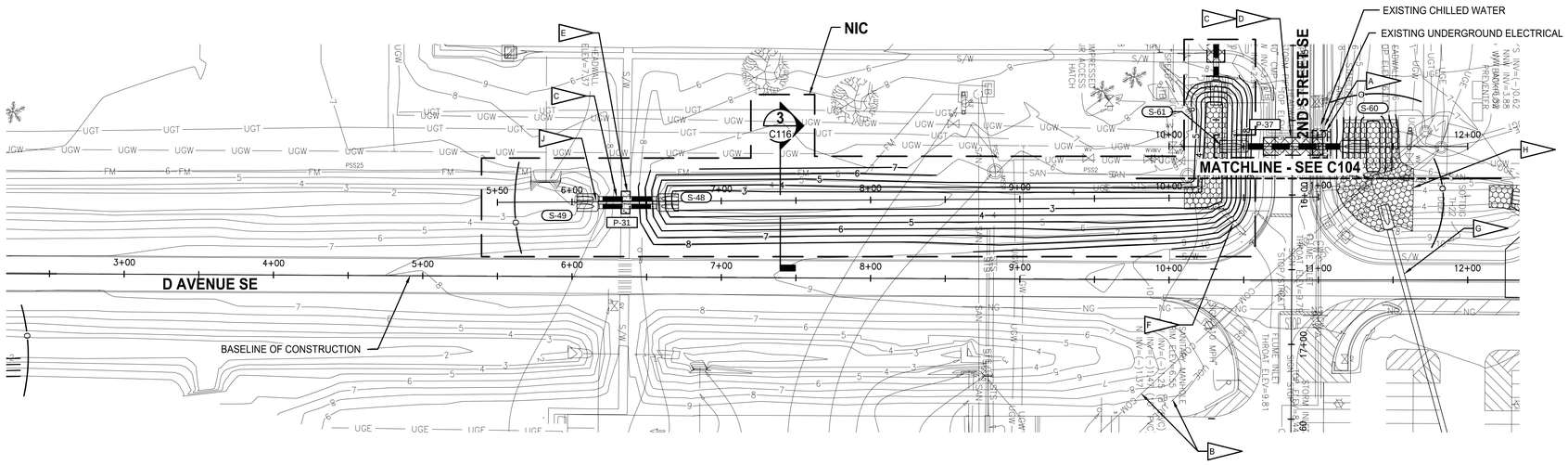

D AVENUE DITCH PLAN

1"=40'

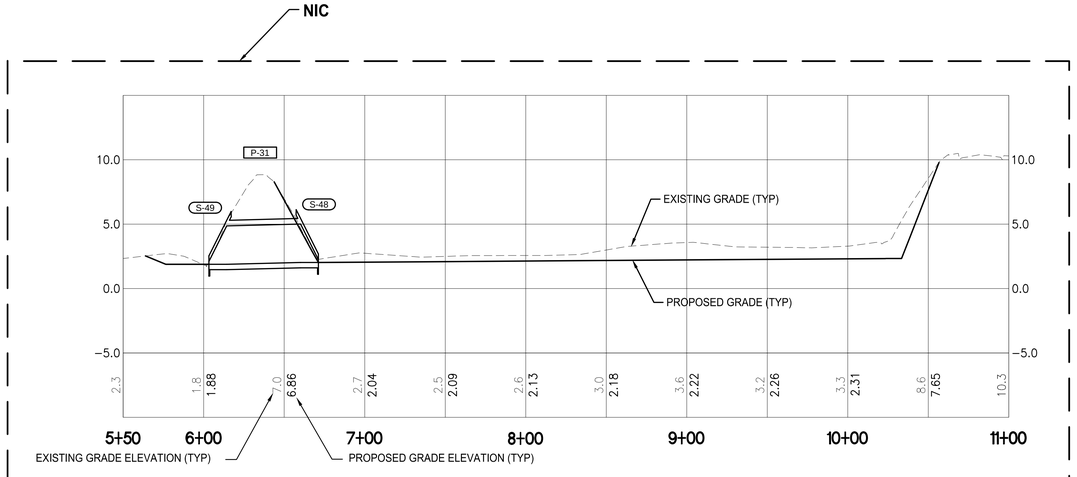

D AVENUE DITCH PROFILE

1"=40' H
1"=5' V

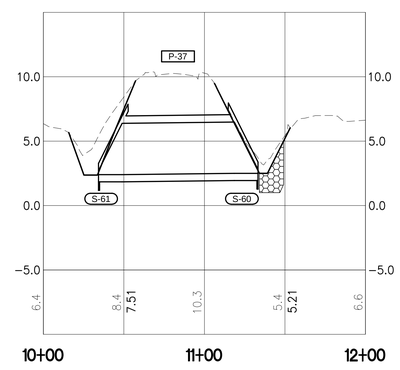

D AVENUE (P-37) PROFILE

1"=40' H
1"=5' V

GRAPHIC SCALE — 0 20 40 80 120 — SCALE IN FEET 1" = 40' H

GRAPHIC SCALE — 0 2.5 5 10 20 — SCALE IN FEET 1" = 5' V

SYM	ZONE	REVISIONS	DATE	APPD
A		REDRAWN-NO CHANGES	05.14.14	

JONES EDMUNDS
730 NE WALDO ROAD, GAINESVILLE, FLORIDA 32641 / (352) 377-5821
3910 S WASHINGTON AVE, SUITE 210, TITUSVILLE, FLORIDA 32780 / (321) 269-2950

SIGNATURES	DATE
DRAWN P. UPSTILL	12.18.13
CHECKED M. O'BRIEN	12.18.13
SUBMITTED: ARCHENG OF RECORD W. NICKEL	12.18.13
ST of LICENSURE: FL LICENSE NO: 68638	12.18.13
APPROVED R. KOLLER	12.18.13
K. MILLER	12.19.13

NATIONAL AERONAUTICS AND SPACE ADMINISTRATION
JOHN F. KENNEDY SPACE CENTER, NASA
KENNEDY SPACE CENTER, FLORIDA

KSC CENTRAL CAMPUS
REPLACEMENT HEADQUARTERS BUILDING
OFF SITE UTILITIES

D AVENUE DITCH PLAN AND PROFILE

FILE NO.	SIZE	DWG. NO.	
C-12070.00	F	79K39624	A
PCN. NO. 98745/98745.1a/98745.2a		SHEET 12	

C107

NOTICE: When Government drawings, specifications, or other data are used for any purpose other than in connection with a definitely related Government procurement operation, the United States Government thereby incurs no responsibility nor obligation whatsoever; and the fact that the Government may have formulated, furnished, or in any way supplied the said drawings, specifications or other data is not to be regarded by implication or otherwise as in any manner licensing the holder or any other person or corporation, or conveying any rights or permission to manufacture, use, or sell any patented invention that may in any way be related thereto.

NOTES

- A — (2) CONCRETE MES AND 79 LF STORM PIPE TO BE DEMOLISHED
- B — CONCRETE RESTORATION. SEE DETAIL 4/C201
- C — TYPICAL UTILITY TRENCH. SEE DETAIL 1/C202

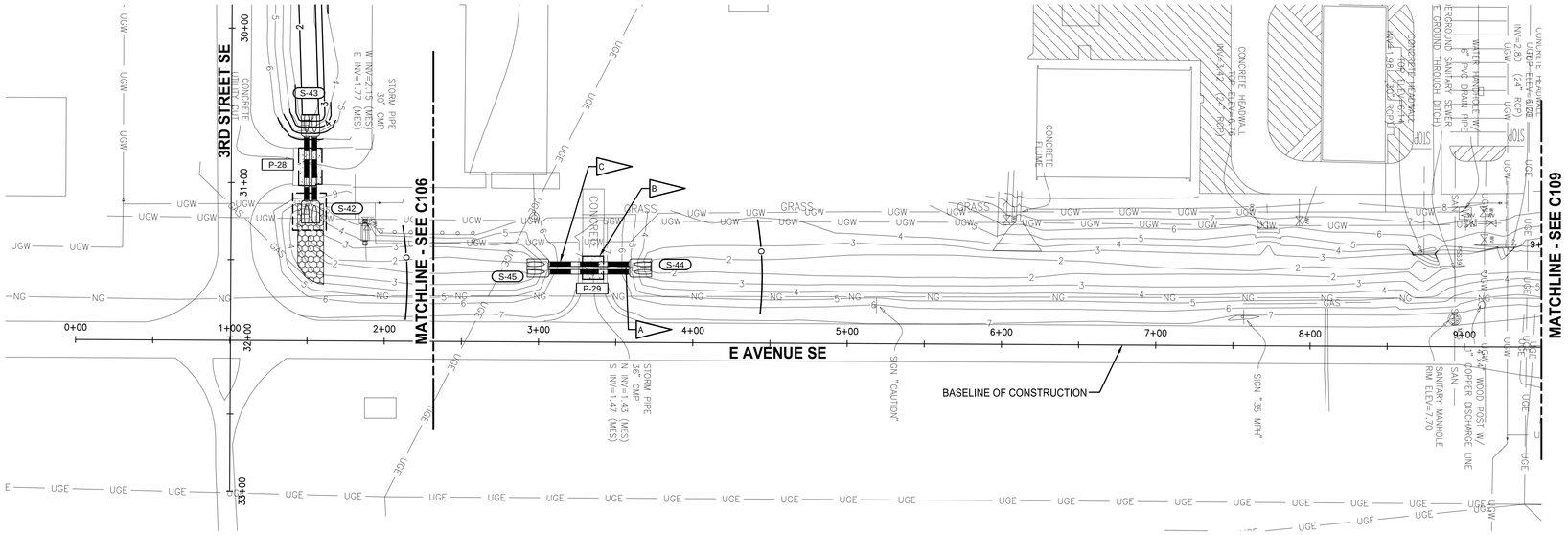

E AVENUE DITCH PLAN

1"=40'

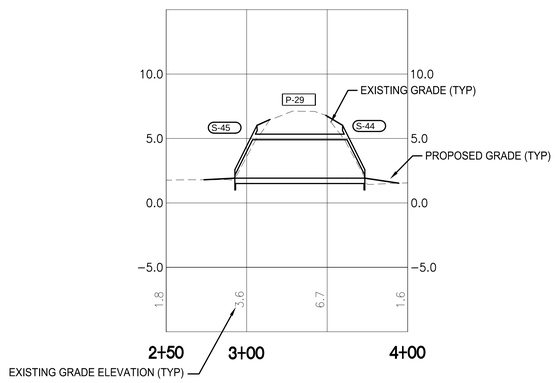

E AVENUE (P-29) PROFILE

1"=40' H
1"=5' V

GRAPHIC SCALE
0 20 40 80 120
SCALE IN FEET
1" = 40' H

GRAPHIC SCALE
0 2.5 5 10 20
SCALE IN FEET
1" = 5' V

SYM	ZONE	REVISIONS	DATE	APPD
A		REDRAWN-NO CHANGES	05.14.14	

JONES EDMUNDS
730 NE WALDO ROAD, GAINESVILLE, FLORIDA 32641 / (352) 377-5821
3910 S WASHINGTON AVE, SUITE 210, TITUSVILLE, FLORIDA 32780 / (321) 269-2950

SIGNATURES	DATE
DRAWN P. UPSTILL	12.18.13
CHECKED M. O'BRIEN	12.18.13
SUBMITTED: ARCHENG OF RECORD W. NICKEL	12.18.13
ST of LICENSURE: FL LICENSE NO: 68638	12.18.13
APPROVED R. KOLLER	12.18.13
K. MILLER	12.19.13

NATIONAL AERONAUTICS AND SPACE ADMINISTRATION
JOHN F. KENNEDY SPACE CENTER, NASA
KENNEDY SPACE CENTER, FLORIDA

KSC CENTRAL CAMPUS
REPLACEMENT HEADQUARTERS BUILDING
OFF SITE UTILITIES

E AVENUE DITCH PLAN AND PROFILE

C108

FILE NO.	SIZE	DWG. NO.	
C-12070.00	F	79K39624	A

PCN. NO. 98745/98745.1a/98745.2a SHEET 13

KSC FORM 1-11 (3/76)(C/G 3/94)

NOTICE: When Government drawings, specifications, or other data are used for any purpose other than in connection with a definitely related Government procurement operation, the United States Government thereby incurs no responsibility nor obligation whatsoever; and the fact that the Government may have formulated, furnished, or in any way supplied the said drawings, specifications or other data is not to be regarded by implication or otherwise as in any manner licensing the holder or any other person or corporation, or conveying any rights or permission to manufacture, use, or sell any patented invention that may in any way be related thereto.

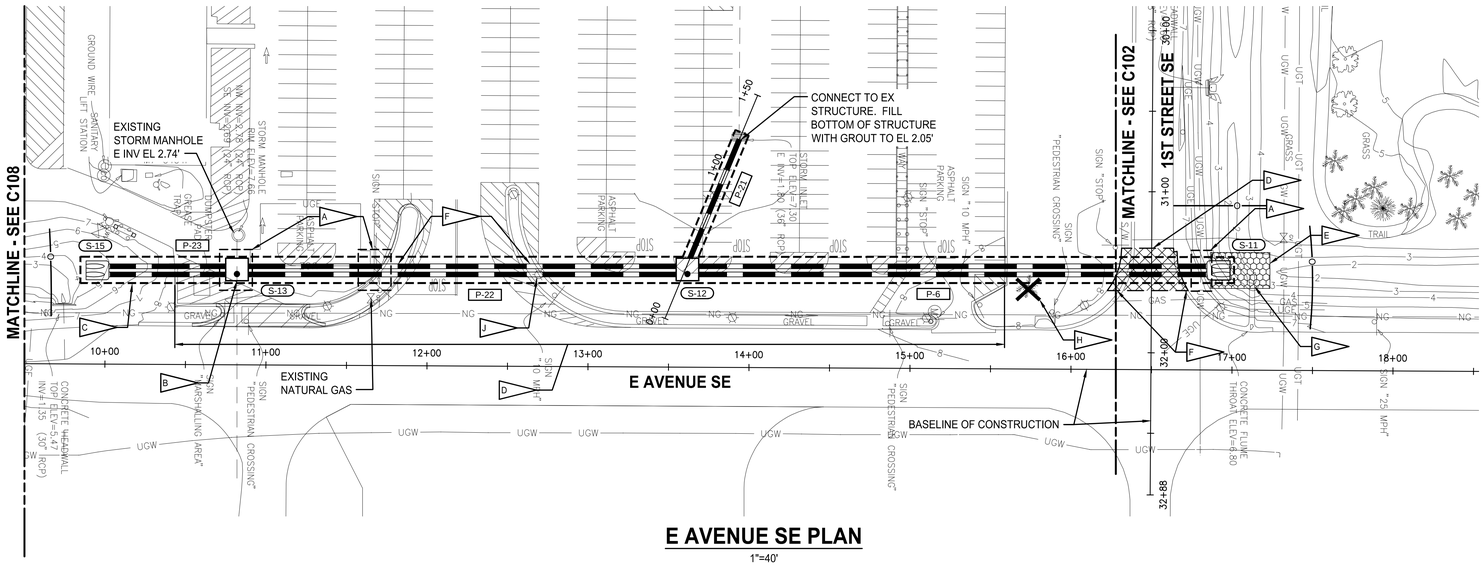

E AVENUE SE PLAN

1"=40'

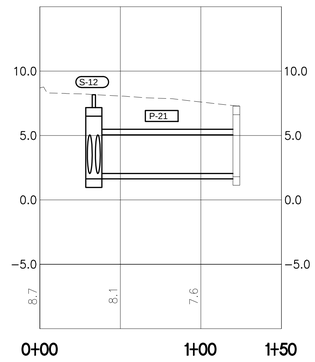

E AVENUE (P-21) PROFILE

1"=40' H
1"=5' V

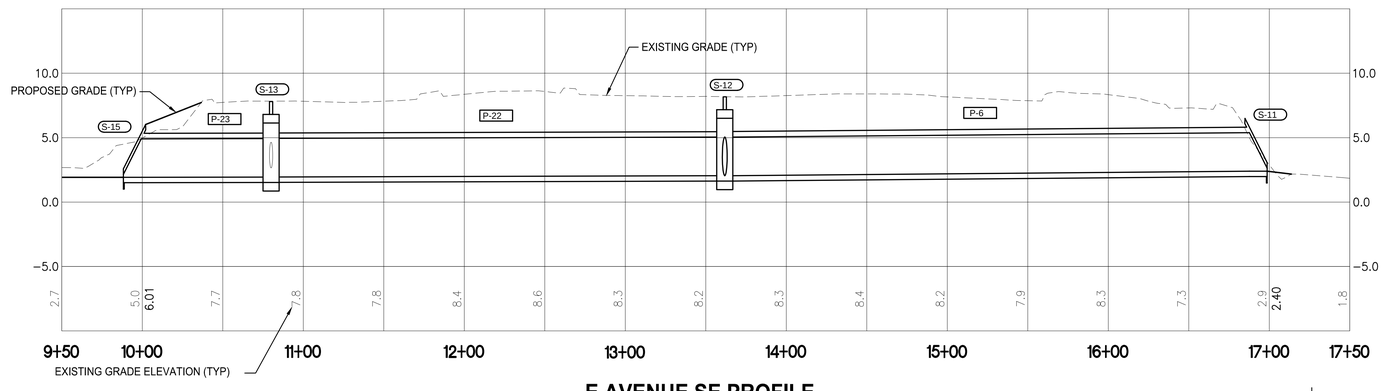

E AVENUE SE PROFILE

1"=40' H
1"=5' V

NOTES

- A — UTILITY CONFLICT. SEE DETAIL 1/C203
- B — PLUG AND ABANDON EXISTING STORMWATER PIPE IN ACCORDANCE WITH FDOT SPECIFICATION NO 430-4.5.
- C — TYPICAL UTILITY TRENCH. SEE DETAIL 1/C202
- D — ASPHALT PAVEMENT RESTORATION. SEE DETAIL 2/C201
- E — 180 SYx18" DEEP FDOT ITEM 530 RIPRAP (RUBBLE) WITH GEOTEXTILE
- F — CONCRETE SIDEWALK RESTORATION. SEE DETAIL 5/C201
- G — FLUME RESTORATION. SEE DETAIL 1/C201
- H — REMOVE TREE
- J — REMOVE LIGHT POLE AND RECONNECT POWER. SEE ELECTRICAL DRAWINGS

GRAPHIC SCALE: 0 20 40 80 120 — SCALE IN FEET 1" = 40' H

GRAPHIC SCALE: 0 2.5 5 10 20 — SCALE IN FEET 1" = 5' V

SYM	ZONE	REVISIONS	DATE	APPD
A		REDRAWN-NO CHANGES.	05.14.14	

JONES EDMUNDS
730 NE WALDO ROAD, GAINESVILLE, FLORIDA 32641 / (352) 377-5821
3910 S WASHINGTON AVE, SUITE 210, TITUSVILLE, FLORIDA 32780 / (321) 269-2950

SIGNATURES	DATE
DRAWN P. UPSTILL	12.18.13
CHECKED M. O'BRIEN	12.18.13
SUBMITTED: ARCHENG OF RECORD W. NICKEL	12.18.13
ST of LICENSURE: FL LICENSE NO: 68638	12.18.13
APPROVED R. KOLLER	12.18.13
K. MILLER	12.19.13

NATIONAL AERONAUTICS AND SPACE ADMINISTRATION
JOHN F. KENNEDY SPACE CENTER, NASA
KENNEDY SPACE CENTER, FLORIDA

KSC CENTRAL CAMPUS
REPLACEMENT HEADQUARTERS BUILDING
OFF SITE UTILITIES

E AVENUE SE PLAN AND PROFILE

C109

FILE NO. C-12070.00 | SIZE F | DWG. NO. 79K39624 | A
PCN. NO. 98745/98745.1a/98745.2a | SHEET 14

NOTICE: When Government drawings, specifications, or other data are used for any purpose other than in connection with a definitely related Government procurement operation, the United States Government thereby incurs no responsibility nor obligation whatsoever; and the fact that the Government may have formulated, furnished, or in any way supplied the said drawings, specifications or other data is not to be regarded by implication or otherwise as in any manner licensing the holder or any other person or corporation, or conveying any rights or permission to manufacture, use, or sell any patented invention that may in any way be related thereto.

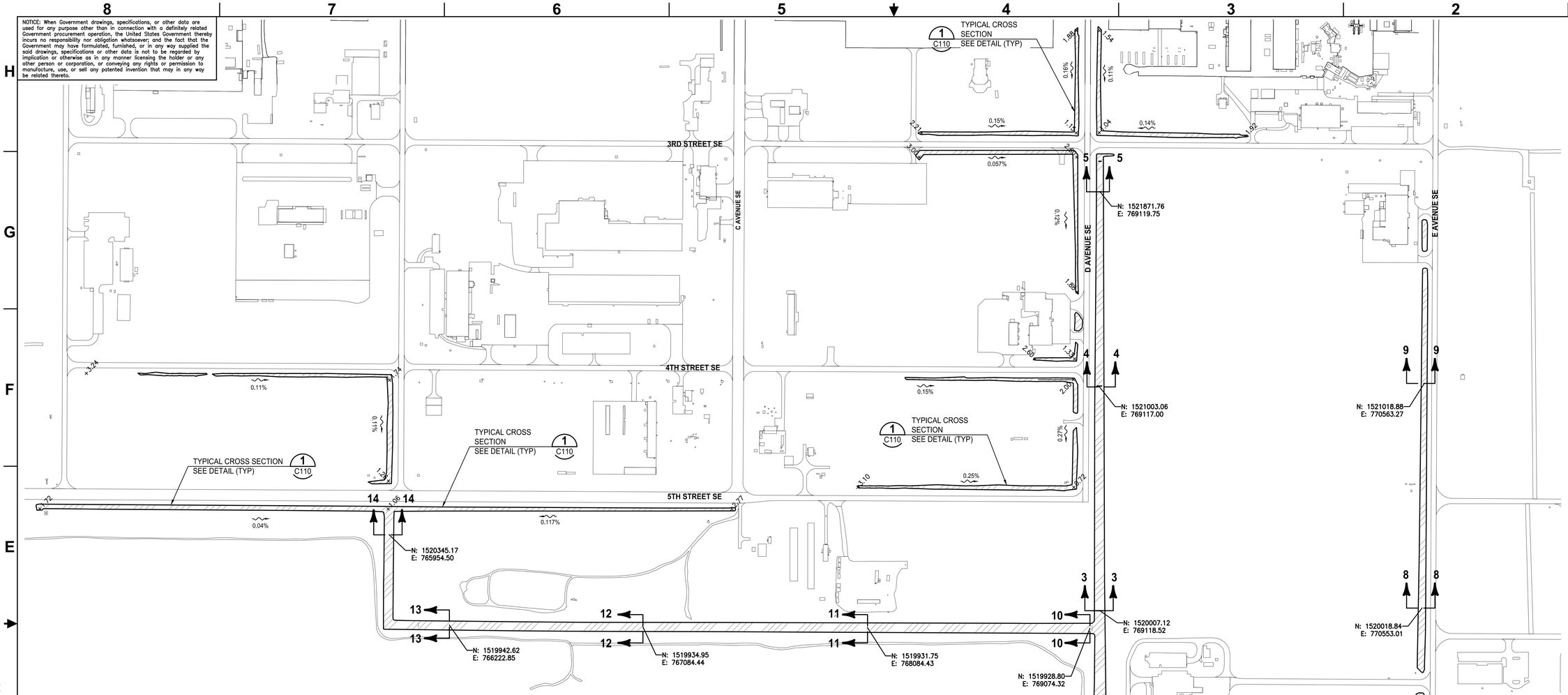

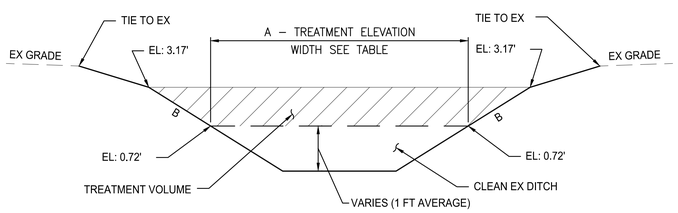

CROSS SECTION 1-1 THRU 14-14

NTS

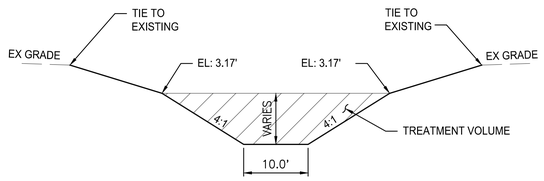

TYPICAL CROSS SECTION 1 C110

NTS

CROSS SECTON	A - TREATMENT EL WIDTH	B- SIDESLOPE
1-1	42.0'	3:1
2-2	41.0'	
3-3	27.0'	
4-4	21.0'	
5-5	11.0'	
6-6	15.0'	4:1
7-7	15.0'	
8-8	13.0'	
9-9	7.0'	
10-10	26.0'	3:1
11-11	23.0'	
12-12	21.0'	
13-13	20.0'	
14-14	23.0'	

NOTE:
TRANSITION SMOOTHLY BETWEEN SPECIFIED CROSS SECTIONS.

GRAPHIC SCALE
0 100 200 400 600
SCALE IN FEET
1" = 200'

N

SYM	ZONE		DATE	APPD
A		REDRAWN-NO CHANGES	05.14.14	

REVISIONS

JONES EDMUNDS
730 NE WALDO ROAD, GAINESVILLE, FLORIDA 32641 / (352) 377-5821
3910 S WASHINGTON AVE, SUITE 210, TITUSVILLE, FLORIDA 32780 / (321) 269-2950

SIGNATURES	DATE
DRAWN P. UPSTILL	12.18.13
CHECKED M. O'BRIEN	12.18.13
SUBMITTED: ARCHENG OF RECORD W. NICKEL	12.18.13
ST of LICENSURE: FL LICENSE NO: 68638	12.18.13
APPROVED R. KOLLER	12.18.13
K. MILLER	12.19.13

NATIONAL AERONAUTICS AND SPACE ADMINISTRATION
JOHN F. KENNEDY SPACE CENTER, NASA
KENNEDY SPACE CENTER, FLORIDA

KSC CENTRAL CAMPUS
REPLACEMENT HEADQUARTERS BUILDING
OFF SITE UTILITIES

DITCH CLEANING PLAN

C110

FILE NO.	SIZE	DWG. NO.	
C-12070.00	F	79K39624	A
PCN. NO. 98745/98745.1a/98745.2a		SHEET 15	

NOTICE: When Government drawings, specifications, or other data are used for any purpose other than in connection with a definitely related Government procurement operation, the United States Government thereby incurs no responsibility nor obligation whatsoever; and the fact that the Government may have formulated, furnished, or in any way supplied the said drawings, specifications or other data is not to be regarded by implication or otherwise as in any manner licensing the holder or any other person or corporation, or conveying any rights or permission to manufacture, use, or sell any patented invention that may in any way be related thereto.

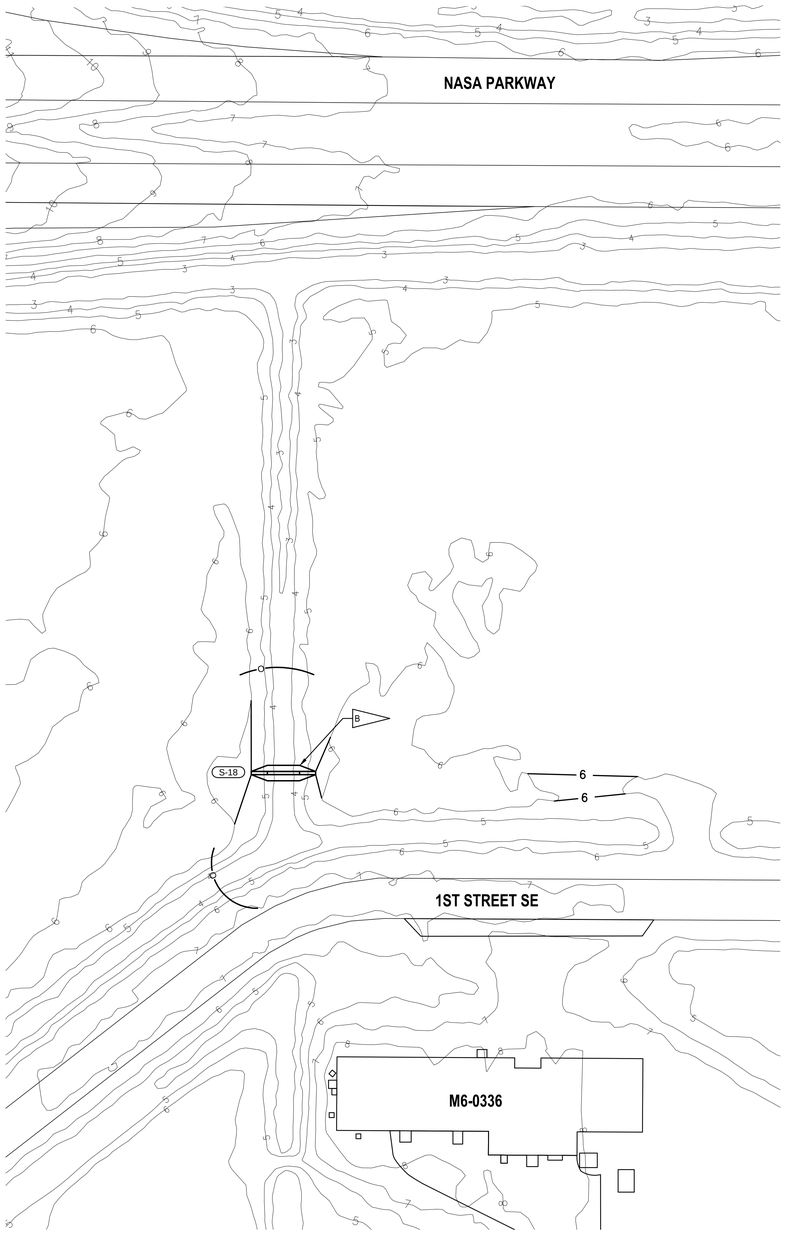

DITCH BLOCK NORTH OF M6-0336 PLAN (1 / C003)

1"=40'

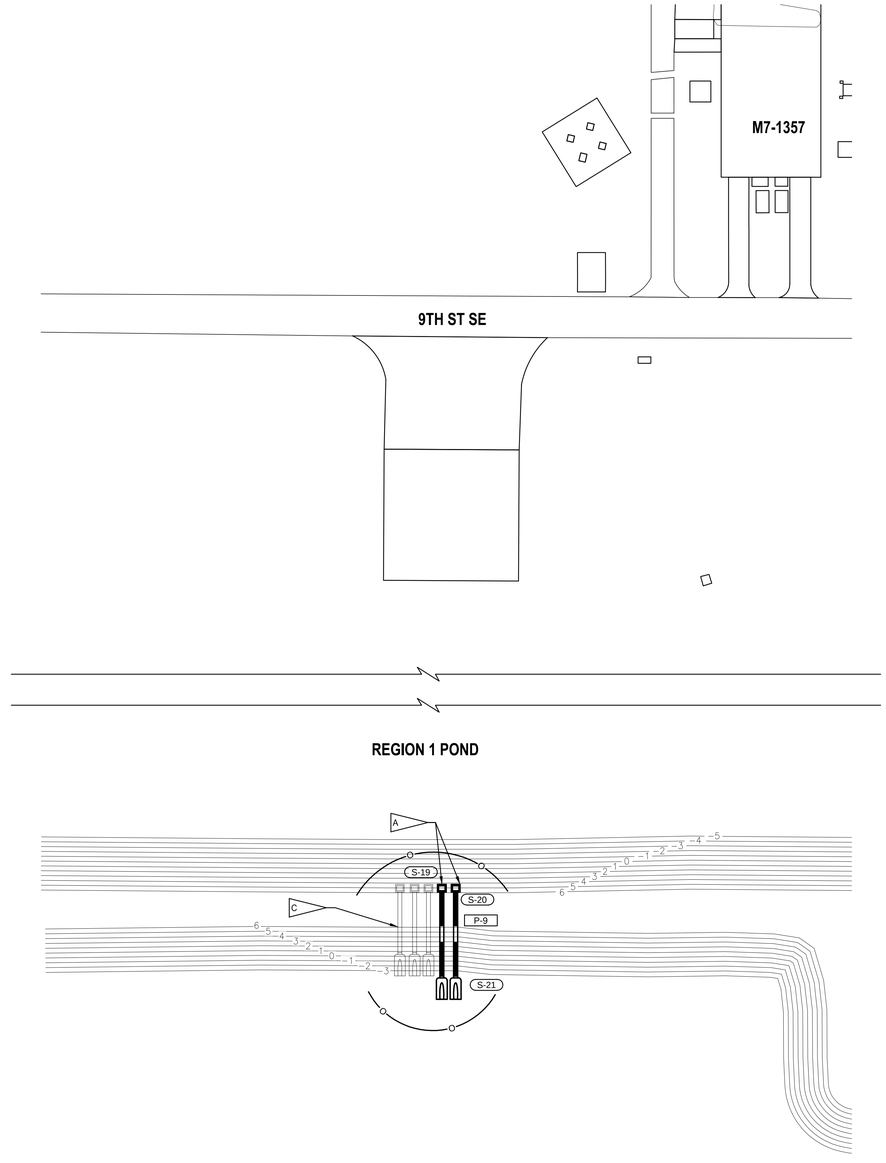

REGION 1 POND DRAINAGE PLAN (2 / C003)

1"=40'

NOTES

- A — MODIFIED FDOT TYPE E INLET, SEE DETAIL 2 / C115
- B — DITCH BLOCK, SEE DETAIL 1 / C115
- C — (3) EXISTING MODIFIED FDOT TYPE E INLET AND ASSOCIATED PIPING TO REMAIN. RAISE WEIRS TO ELEVATION 3.17'

N

GRAPHIC SCALE

0 20 40 80 120

SCALE IN FEET
1" = 40'

SYM	ZONE		DATE	APPD
A		REDRAWN-NO CHANGES	05.14.14	

REVISIONS

JONES EDMUNDS
730 NE WALDO ROAD, GAINESVILLE, FLORIDA 32641 / (352) 377-5821
3910 S WASHINGTON AVE, SUITE 210, TITUSVILLE, FLORIDA 32780 / (321) 269-2950

SIGNATURES	DATE
DRAWN P. UPSTILL	12.18.13
CHECKED M. O'BRIEN	12.18.13
SUBMITTED: ARCHENG OF RECORD W. NICKEL	12.18.13
ST of LICENSURE: FL LICENSE NO: 68638	12.18.13
APPROVED R. KOLLER	12.18.13
K. MILLER	12.19.13

NATIONAL AERONAUTICS AND SPACE ADMINISTRATION
JOHN F. KENNEDY SPACE CENTER, NASA
KENNEDY SPACE CENTER, FLORIDA

KSC CENTRAL CAMPUS
REPLACEMENT HEADQUARTERS BUILDING
OFF SITE UTILITIES

GRADING PLANS

C111

FILE NO.	SIZE	DWG. NO.	
C-12070.00	F	79K39624	A
PCN. NO. 98745/98745.1a/98745.2a	SHEET 16		

FILE: R:\98520 Huntsville Brady\CAD-02 Central Campus PA\CAD\4 Contract Drawings\Civil\4-98520CD0001C111.dwg PRINTED: 5/12/2014 10:44 AM, BY USER: Jon Allen LAST MODIFIED: 12/16/2013 12:24 PM, BY USER: pupstil

NOTICE: When Government drawings, specifications, or other data are used for any purpose other than in connection with a definitely related Government procurement operation, the United States Government thereby incurs no responsibility nor obligation whatsoever; and the fact that the Government may have formulated, furnished, or in any way supplied the said drawings, specifications or other data is not to be regarded by implication or otherwise as in any manner licensing the holder or any other person or corporation, or conveying any rights or permission to manufacture, use, or sell any patented invention that may in any way be related thereto.

NOTES

- A — MODIFIED FDOT TYPE E INLET, SEE DETAIL 2/C115
- B — MODIFIED 10'x10' J BOTTOM W/ TYPE 7 TOP, SEE DETAIL 3/C115
- C — HEADWALL, SEE DETAIL 6/C201
- D — DITCH BLOCK, SEE DETAIL 1/C115

DRAINAGE STRUCTURE TABLE

	STRUCTURE NO	FDOT STRUCTURE TYPE	FDOT INDEX	INVERT ELEVATION (FT)	GRATE/ RIM/ TOP ELEVATION (FT)	NORTHING	EASTING
	S-1	E INLET	232	2.60	5.80	1523717.13	767575.96
	S-2	MES	272	2.00	N/A	1523833.20	767575.98
D	S-3	DITCH BLOCK	N/A	5.80	N/A	1523919.95	770564.24
	S-4	MES	272	2.50	N/A	1523130.49	767586.16
	S-5	MES	272	2.40	N/A	1523046.84	767586.23
	S-11	(2) MES	272	2.40	N/A	1523667.35	770559.93
B	S-12	MODIFIED 10'x10' J BOTTOM W/ TYPE 7 TOP	200 & 201	N: 2.05 S: 2.05 W: 2.05	MATCH EXIST	1523330.49	770559.36
B	S-13	MODIFIED 10'x10' J BOTTOM W/ TYPE 7 TOP	200 & 201	N: 1.95 S: 1.94 W: 2.65	MATCH EXIST	1523050.71	770559.36
	S-15	(2) MES	272	1.92	N/A	1522957.02	770559.93
C	S-16	ENDWALL	250	1.00	N/A	1522115.11	769137.45
C	S-17	ENDWALL	250	0.80	N/A	1522039.47	769137.45
D	S-18	DITCH BLOCK	N/A	5.50	N/A	1523725.12	765016.56
A	S-19	MODIFIED E INLET	232	SEE DETAIL	SEE DETAIL	1517376.58	770035.96
A	S-20	MODIFIED E INLET	232	SEE DETAIL	SEE DETAIL	1517376.58	770044.55
	S-21	(2) MES	272	-3.66	N/A	1517307.58	770040.25
C	S-23	ENDWALL	250	1.20	N/A	1522147.63	769024.90
C	S-24	ENDWALL	250	1.00	N/A	1522147.63	769101.20
	S-38	(2) MES	272	1.92	N/A	1522116.76	769835.79
	S-39	(2) MES	272	1.92	N/A	1522116.76	769764.22
	S-40	(2) MES	272	1.92	N/A	1522114.69	770261.46
	S-41	(2) MES	272	1.92	N/A	1522114.69	770188.62
	S-42	(2) MES	272	1.92	N/A	1522121.01	770537.34
	S-43	(2) MES	272	1.92	N/A	1522121.01	770467.08
	S-44	(2) MES	272	1.92	N/A	1522342.05	770566.52
	S-45	(2) MES	272	1.92	N/A	1522261.34	770566.52
	S-46 NIC	MES	272	2.40	N/A		
	S-47 NIC	MES	272	2.40	N/A		
	S-48 NIC	(2) MES	272	2.02	N/A		
	S-49 NIC	(2) MES	272	1.88	N/A		
C	S-50	ENDWALL	250	2.49	N/A	1523672.14	767571.46
	S-51	MES	272	2.41	N/A	1523582.81	767571.46
	S-52 NIC	MES	272	2.40	N/A		
	S-53 NIC	MES	272	2.40	N/A		
	S-54 NIC	MES	272	2.40	N/A		
	S-55 NIC	MES	272	2.40	N/A		
	S-56 NIC	MES	272	2.40	N/A		
	S-57 NIC	MES	272	2.40	N/A		
	S-58 NIC	MES	272	2.40	N/A		
	S-59 NIC	MES	272	2.40	N/A		
	S-60	MES	272	2.50	N/A	1523129.12	768978.69
	S-61	MES	272	2.40	N/A	1523030.09	768978.69

DRAINAGE PIPING TABLE

PIPE NO	STRUCTURE U/S	STRUCTURE D/S	LENGTH (FT) INCL MES	DIAMETER (IN)	MATERIAL
P-1	S-1	S-2	115	30	RCP
P-2	S-4	S-5	84	42	RCP
P-6	S-11	S-12	330	(2) 36	RCP
P-8	S-16	S-17	76	(2) 36	RCP
P-9	S-20	S-21	68	(2) 30	RCP
P-11	S-23	S-24	76	42	RCP
P-21	EX STRUCTURE	S-12	80	36	RCP
P-22	S-12	S-13	266	(2) 36	RCP
P-23	S-13	S-15	87	(2) 36	RCP
P-26	S-38	S-39	72	(2) 36	RCP
P-27	S-40	S-41	73	(2) 36	RCP
P-28	S-42	S-43	70	(2) 36	RCP
P-29	S-44	S-45	81	(2) 36	RCP
P-30 NIC	S-46	S-47	84	24	RCP
P-31 NIC	S-48	S-49	68	(2) 36	RCP
P-32	S-50	S-51	90	42	RCP
P-33 NIC	S-52	S-53	84	24X38	ERCP
P-34 NIC	S-54	S-55	100	24X38	ERCP
P-35 NIC	S-56	S-57	86	36	RCP
P-36 NIC	S-58	S-59	94	42	RCP
P-37	S-60	S-61	99	48	RCP

SYM	ZONE	REVISIONS	DATE	APPD
A		REDRAWN-NO CHANGES	05.14.14	

JONES EDMUNDS
730 NE WALDO ROAD, GAINESVILLE, FLORIDA 32641 / (352) 377-5821
3910 S WASHINGTON AVE, SUITE 210, TITUSVILLE, FLORIDA 32780 / (321) 269-2950

SIGNATURES	DATE
DRAWN P. UPSTILL	12.18.13
CHECKED M. O'BRIEN	12.18.13
SUBMITTED: ARCHENG OF RECORD W. NICKEL	12.18.13
ST of LICENSURE: FL LICENSE NO: 68638	12.18.13
APPROVED R. KOLLER	12.18.13
K. MILLER	12.19.13

NATIONAL AERONAUTICS AND SPACE ADMINISTRATION
JOHN F. KENNEDY SPACE CENTER, NASA
KENNEDY SPACE CENTER, FLORIDA

KSC CENTRAL CAMPUS
REPLACEMENT HEADQUARTERS BUILDING
OFF SITE UTILITIES

DRAINAGE STRUCTURE AND PIPING TABLES

C112

FILE NO.	SIZE	DWG. NO.	
C-12070.00	F	79K39624	A
PCN. NO. 98745/98745.1a/98745.2a		SHEET 17	

FILE: R:\98520 Huntsville Brady\CAD-02 Central Campus PA\grp4 Contract Drawings\Civil\4-U89520K001C117_C.dwg PRINTED: 5/12/2014 10:44 AM, BY USER: JON ALDEN LAST MODIFIED: 12/18/2013 12:24 PM, BY USER: pupstil

NOTICE: When Government drawings, specifications, or other data are used for any purpose other than in connection with a definitely related Government procurement operation, the United States Government thereby incurs no responsibility nor obligation whatsoever; and the fact that the Government may have formulated, furnished, or in any way supplied the said drawings, specifications or other data is not to be regarded by implication or otherwise as in any manner licensing the holder or any other person or corporation, or conveying any rights or permission to manufacture, use, or sell any patented invention that may in any way be related thereto.

SYM	ZONE	REVISIONS	DATE	APPD
A		THIS SHEET REVISED IN ITS ENTIRETY	05.14.14	

JONES EDMUNDS
730 NE WALDO ROAD, GAINESVILLE, FLORIDA 32641 / (352) 377-5821
3910 S WASHINGTON AVE, SUITE 210, TITUSVILLE, FLORIDA 32780 / (321) 269-2950

NATIONAL AERONAUTICS AND SPACE ADMINISTRATION
JOHN F. KENNEDY SPACE CENTER, NASA
KENNEDY SPACE CENTER, FLORIDA

KSC CENTRAL CAMPUS
REPLACEMENT HEADQUARTERS BUILDING
OFF SITE UTILITIES

NOT USED

SIGNATURES	DATE
DRAWN P. UPSTILL	12.18.13
CHECKED M. O'BRIEN	12.18.13
SUBMITTED: ARCH/ENG OF RECORD W. NICKEL	12.18.13
ST of LICENSURE: FL LICENSE NO: 68638	12.18.13
APPROVED R. KOLLER	12.18.13
K. MILLER	12.19.13

C113

FILE NO.	SIZE	DWG. NO.	
C-12070.00	F	79K39624	A

PCN. NO. 98745/98745.1a/98745.2a SHEET 18

KSC FORM 1-11 (3/76)(C/G 3/94)

NOTICE: When Government drawings, specifications, or other data are used for any purpose other than in connection with a definitely related Government procurement operation, the United States Government thereby incurs no responsibility nor obligation whatsoever; and the fact that the Government may have formulated, furnished, or in any way supplied the said drawings, specifications or other data is not to be regarded by implication or otherwise as in any manner licensing the holder or any other person or corporation, or conveying any rights or permission to manufacture, use, or sell any patented invention that may in any way be related thereto.

1.

SYM	ZONE	REVISIONS	DATE	APPD
A		THIS SHEET REVISED IN ITS ENTIRETY	05.14.14	

JONES EDMUNDS
730 NE WALDO ROAD, GAINESVILLE, FLORIDA 32641 / (352) 377-5821
3910 S WASHINGTON AVE, SUITE 210, TITUSVILLE, FLORIDA 32780 / (321) 269-2950

NATIONAL AERONAUTICS AND SPACE ADMINISTRATION
JOHN F. KENNEDY SPACE CENTER, NASA
KENNEDY SPACE CENTER, FLORIDA

KSC CENTRAL CAMPUS
REPLACEMENT HEADQUARTERS BUILDING
OFF SITE UTILITIES

NOT USED

SIGNATURES	DATE
DRAWN P. UPSTILL	12.18.13
CHECKED M. O'BRIEN	12.18.13
SUBMITTED: ARCH/ENG OF RECORD W. NICKEL	12.18.13
ST of LICENSURE: FL LICENSE NO: 68638	12.18.13
APPROVED R. KOLLER	12.18.13
K. MILLER	12.19.13

C114

FILE NO.	SIZE	DWG. NO.	
C-12070.00	F	79K39624	A

PCN. NO. 98745/98745.1a/98745.2a SHEET 19

FILE: N:\08930 Hunton Brady\001-02 Central Campus HQ\UP4 Contract Drawings\Civil\4-08930001c114.dwg PRINTED: 5/14/2014 10:50 AM, BY USER: Jon Allen LAST MODIFIED: 5/14/2014 10:36 AM, BY USER: jallen

KSC FORM 1-11 (3/76)(C/G 3/94)

NOTICE: When Government drawings, specifications, or other data are used for any purpose other than in connection with a definitely related Government procurement operation, the United States Government thereby incurs no responsibility nor obligation whatsoever; and the fact that the Government may have formulated, furnished, or in any way supplied the said drawings, specifications or other data is not to be regarded by implication or otherwise as in any manner licensing the holder or any other person or corporation, or conveying any rights or permission to manufacture, use, or sell any patented invention that may in any way be related thereto.

STRUCTURE DIMENSIONS & ELEVATIONS			
STRUCTURE	A	B	C
S-3	5.80'	6.30'	2.5'
S-18	5.50'	6.00'	3.5'

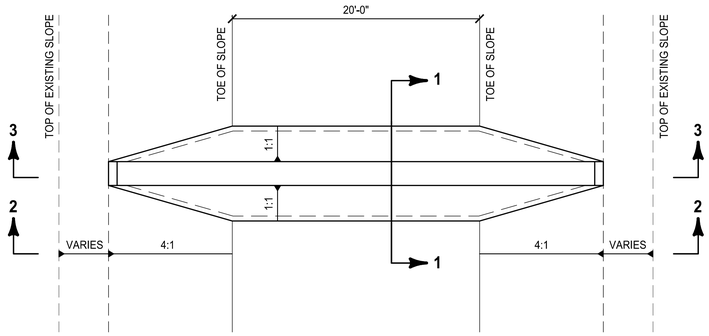

PLAN

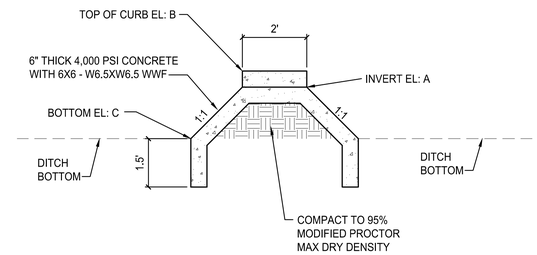

SECTION 1-1

DITCH BLOCK (STRUCTURE S-3 & S-18) 1

NTS

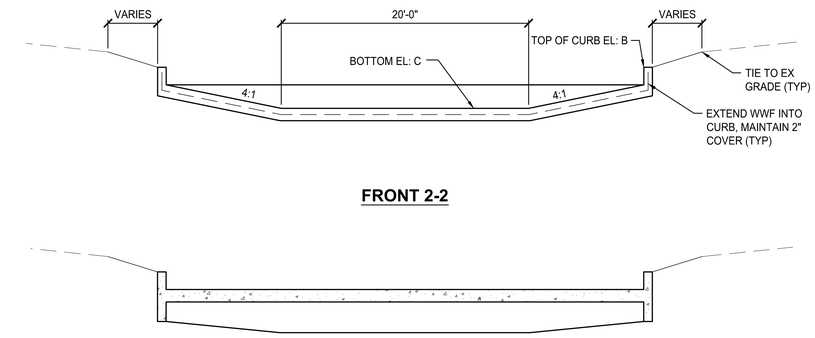

FRONT 2-2

SECTION 3-3

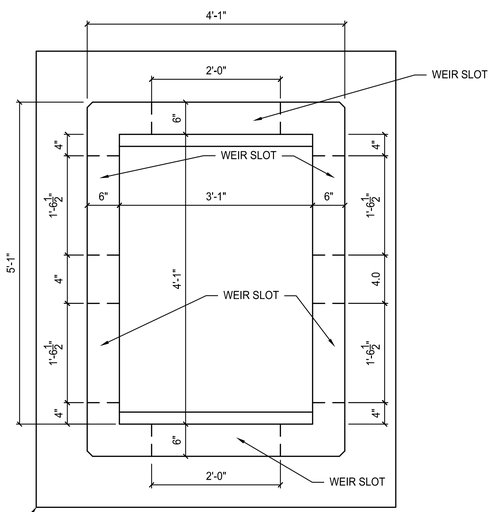

PLAN

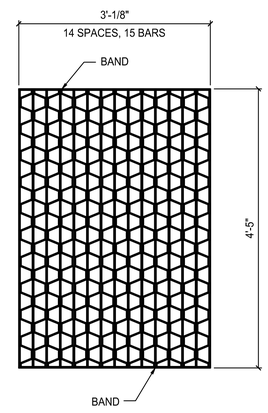

STEEL GRATE

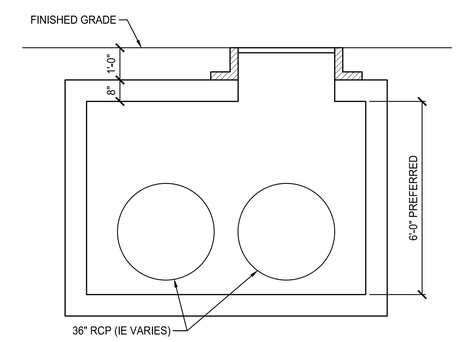

MODIFIED 10'x10' J BOTTOM W/ TYPE 7 TOP (STRUCTURE S-12 & S-13) 3

NTS

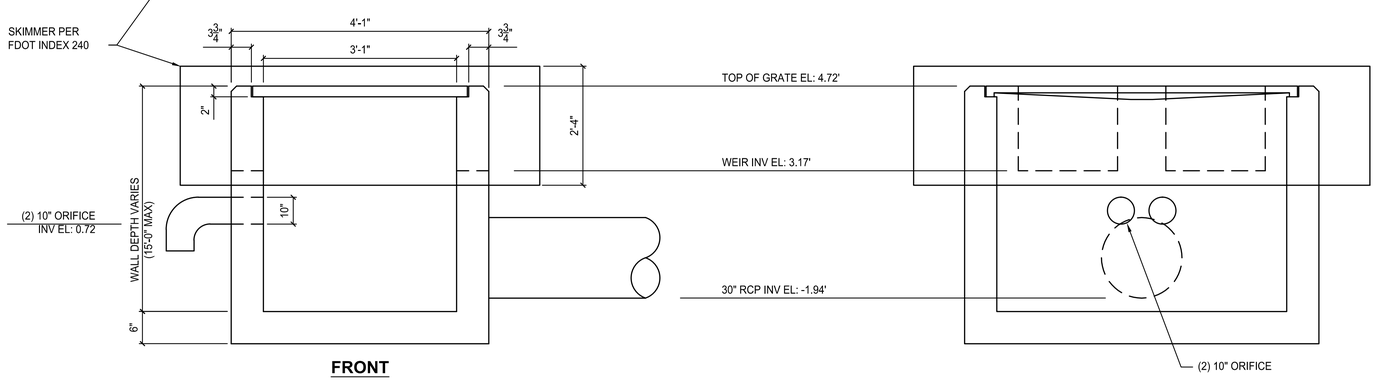

FRONT

SIDE

MODIFIED FDOT TYPE D INLET (STRUCTURES S-19 & S-20) 2

NTS

SYM	ZONE		DATE	APPD
A		REDRAWN-NO CHANGES	05.14.14	

REVISIONS

JONES EDMUNDS
730 NE WALDO ROAD, GAINESVILLE, FLORIDA 32641 / (352) 377-5821
3910 S WASHINGTON AVE, SUITE 210, TITUSVILLE, FLORIDA 32780 / (321) 269-2950

SIGNATURES	DATE
DRAWN P. UPSTILL	12.18.13
CHECKED M. O'BRIEN	12.18.13
SUBMITTED: ARCHENG OF RECORD W. NICKEL	12.18.13
ST of LICENSURE: FL LICENSE NO: 68638	12.18.13
APPROVED R. KOLLER	12.18.13
K. MILLER	12.19.13

NATIONAL AERONAUTICS AND SPACE ADMINISTRATION
JOHN F. KENNEDY SPACE CENTER, NASA
KENNEDY SPACE CENTER, FLORIDA

KSC CENTRAL CAMPUS
REPLACEMENT HEADQUARTERS BUILDING
OFF SITE UTILITIES

STORMWATER DETAILS

C115

FILE NO.	SIZE	DWG. NO.	
C-12070.00	F	79K39624	A

PCN. NO. 98745/98745.1a/98745.2a SHEET 20

FILE: N:\08&50 Hunton Brady\001-02 Central Campus HQ\UP4 Contract Drawings\Civil\S-089.300\C115.dwg PRINTED: 5/12/2014 10:44 AM, BY USER: Jon Allen LAST MODIFIED: 12/19/2013 12:26 PM, BY USER: pupstill

KSC FORM 1-11 (3/76)(C/G 3/94)

NOTICE: When Government drawings, specifications, or other data are used for any purpose other than in connection with a definitely related Government procurement operation, the United States Government thereby incurs no responsibility nor obligation whatsoever; and the fact that the Government may have formulated, furnished, or in any way supplied the said drawings, specifications or other data is not to be regarded by implication or otherwise as in any manner licensing the holder or any other person or corporation, or conveying any rights or permission to manufacture, use, or sell any patented invention that may in any way be related thereto.

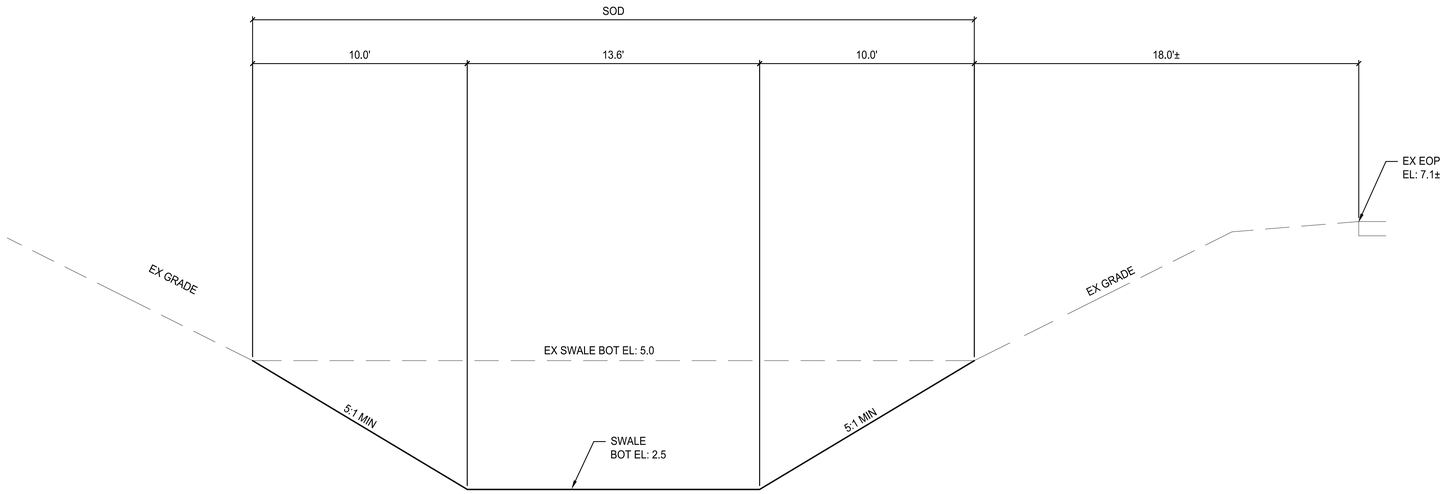

CROSS SECTION 1
NTS C101

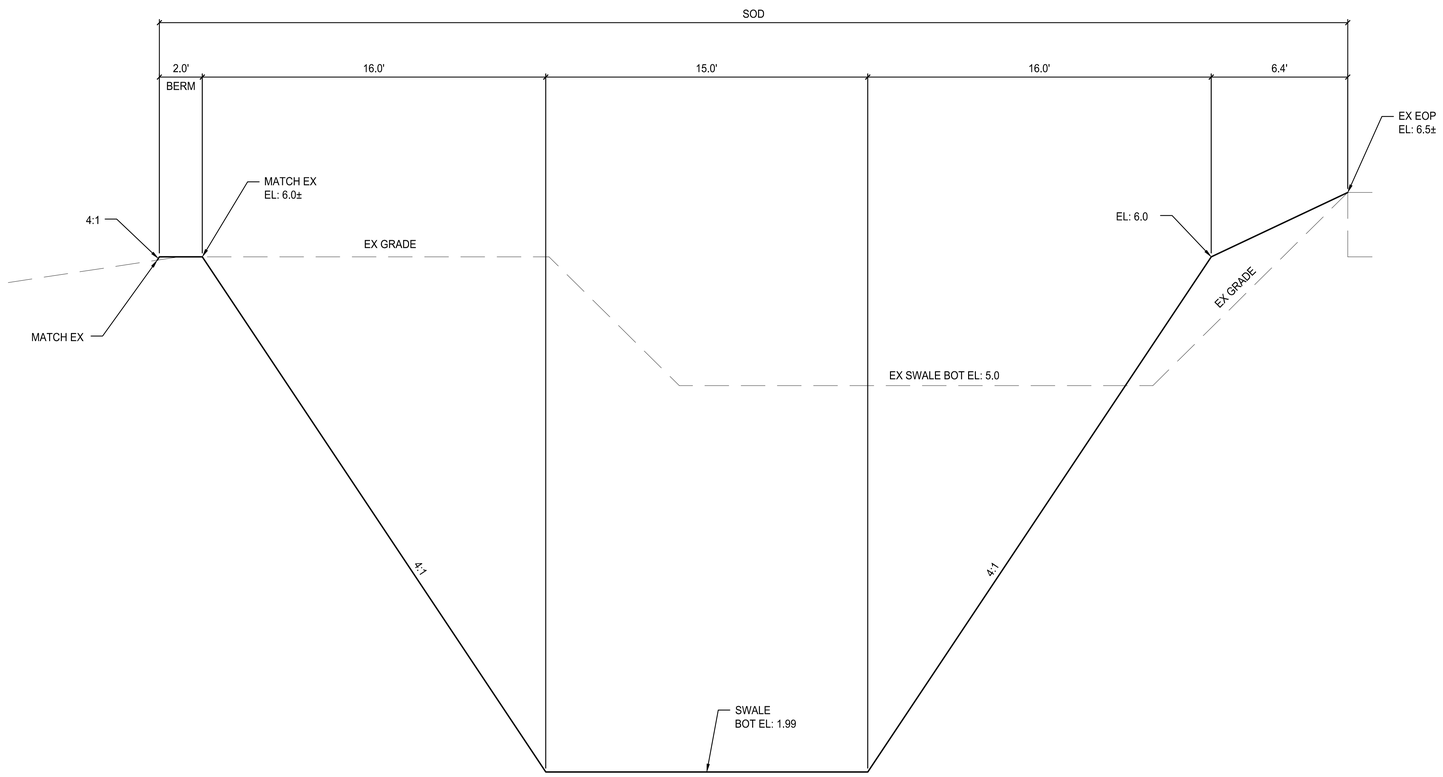

CROSS SECTION 2
NTS C102

NIC

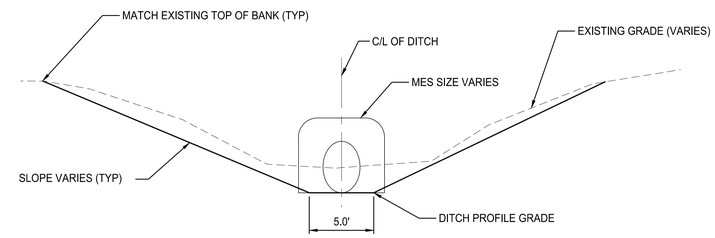

TYPICAL DITCH DETAIL 3
NTS

SYM	ZONE	REVISIONS	DATE	APPD
A		REDRAWN-NO CHANGES	05.14.14	

JONES EDMUNDS
730 NE WALDO ROAD, GAINESVILLE, FLORIDA 32641 / (352) 377-5821
3910 S WASHINGTON AVE, SUITE 210, TITUSVILLE, FLORIDA 32780 / (321) 269-2950

SIGNATURES	DATE
DRAWN P. UPSTILL	12.18.13
CHECKED M. O'BRIEN	12.18.13
SUBMITTED: ARCHENG OF RECORD W. NICKEL	12.18.13
ST of LICENSURE: FL LICENSE NO: 68638	12.18.13
APPROVED R. KOLLER	12.18.13
K. MILLER	12.19.13

NATIONAL AERONAUTICS AND SPACE ADMINISTRATION
JOHN F. KENNEDY SPACE CENTER, NASA
KENNEDY SPACE CENTER, FLORIDA

KSC CENTRAL CAMPUS
REPLACEMENT HEADQUARTERS BUILDING
OFF SITE UTILITIES

STORMWATER DETAILS

C116

FILE NO.	SIZE	DWG. NO.	
C-12070.00	F	79K39624	A

PCN. NO. 98745/98745.1a/98745.2a SHEET 21

FILE: R:\98520 Hunton Brady\UU1-U2 Central Campus HQ\pt4 Contract Drawings\Civil\4-U89520U001C116.dwg PRINTED: 5/12/2014 10:44 AM, BY USER: Jon Allen LAST MODIFIED: 12/16/2013 12:26 PM, BY USER: pupstil

KSC FORM 1-11 (3/76)(C/G 3/94)

NOTICE: When Government drawings, specifications, or other data are used for any purpose other than in connection with a definitely related Government procurement operation, the United States Government thereby incurs no responsibility nor obligation whatsoever; and the fact that the Government may have formulated, furnished, or in any way supplied the said drawings, specifications or other data is not to be regarded by implication or otherwise as in any manner licensing the holder or any other person or corporation, or conveying any rights or permission to manufacture, use, or sell any patented invention that may in any way be related thereto.

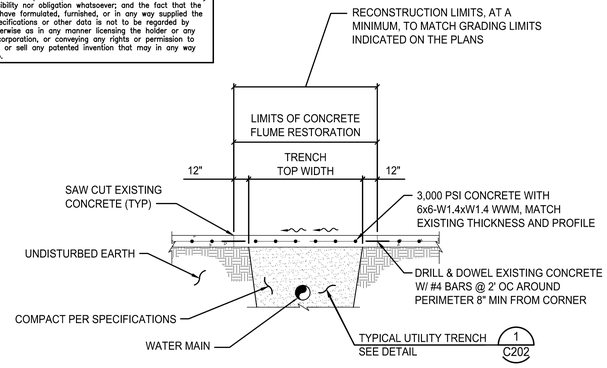

NOTES:
A. MATCH EXISTING FLUME PROFILE.
B. MATCH EXISTING GRADE AND FINISH.
C. REPLACE EXISTING CURBS AS NEEDED PER FDOT INDEX 300.

FLUME RESTORATION DETAIL 1
NTS

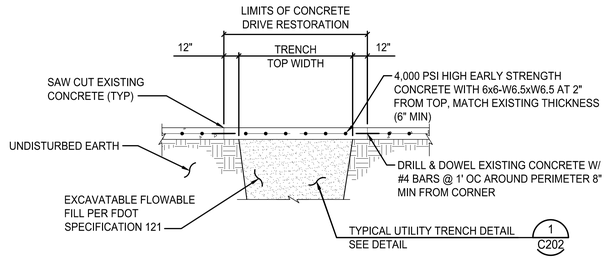

NOTES:
A. DRILL AND DOWEL 1 LOCATION EACH SIDE FOR CURB REPAIR.
B. MATCH EXISTING GRADE AND FINISH.
C. REPLACE EXISTING CURBS AS NEEDED PER FDOT INDEX 300.
D. WATER TO CEMENT RATIO SHALL NOT EXCEED 0.45.
E. PLACE CONTRACTION JOINTS @12' OC (MAX)
F. CONCRETE SHALL BE CURED MOIST, BY SPRAYING OR FOGGING, FOR FIRST 48 HOURS (MIN)
G. RESTORE ALL PAVEMENT MARKINGS IN-KIND.

CONCRETE RESTORATION DETAIL 4
NTS

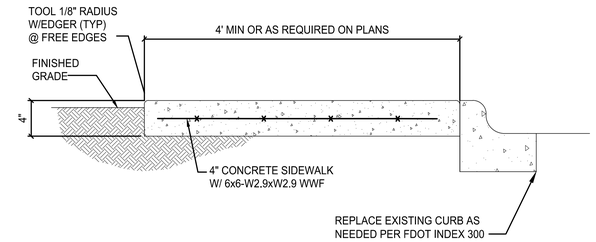

NOTES:
A. TOOL JOINTS SHALL BE LOCATED 5' APART ALONG THE LENGTH OF THE SIDEWALK.
B. CONTROL JOINTS SHALL BE LOCATED AT 10' SPACING ALONG THE LENGTH OF THE SIDEWALK. CONTROL JOINTS SHALL INCLUDE THE CONSTRUCTION OF 1/2" WIDE EXPANSION JOINT MATERIAL FOR THE DEPTH AND WIDTH OF THE SIDEWALK.
C. MATCH EXISTING SIDEWALK DEPTH, WIDTH, JOINT AND CONTROL JOINT LOCATIONS AS REQUIRED.

SIDEWALK RESTORATION DETAIL 5
NTS

DRAINAGE STRUCTURE TABLE

STRUCTURE NO	PIPE DIA (D)	HEADWALL TYPE	INVERT ELEVATION	A	X	C	G	H	TOP EL
S-16	36"	DOUBLE	1.00'	3'-8"	5'-1"	10'-1/2"	4'-0"	4'-3"	5.25'
S-17	36"	DOUBLE	0.80'	3'-8"	5'-1"	10'-1/2"	4'-0"	4'-3"	5.05'
S-23	42"	SINGLE	1.20'	4'-2"	0	8'-6"	5'-0"	4'-9"	5.95'
S-24	42"	SINGLE	1.00'	4'-2"	0	8'-6"	5'-0"	4'-9"	4.75'
S-50	42"	SINGLE	2.49'	4'-2"	0	8'-6"	5'-0"	4'-9"	7.24'

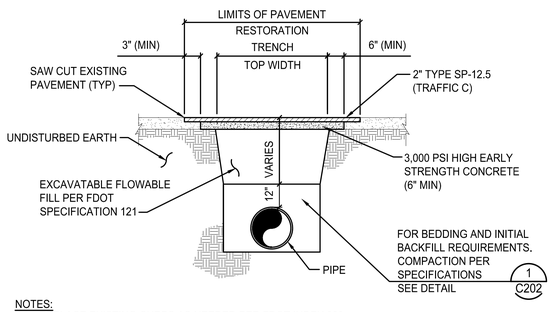

NOTES:
A. REPLACE EXISTING CURBS AS NEEDED PER FDOT INDEX 300.
B. RESTORE ALL PAVEMENT MARKINGS IN-KIND.

ASPHALT PAVEMENT RESTORATION DETAIL 2
NTS

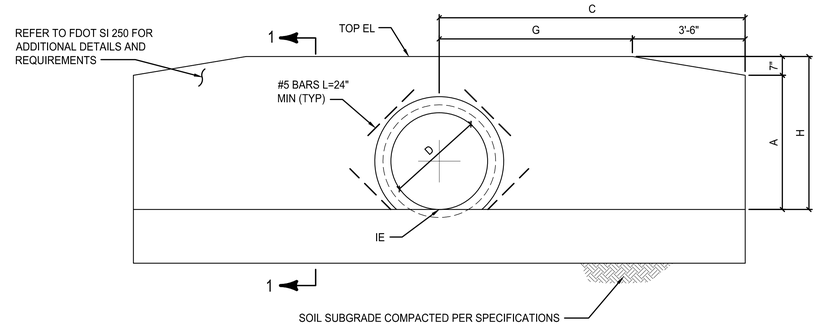

FRONT VIEW - SINGLE

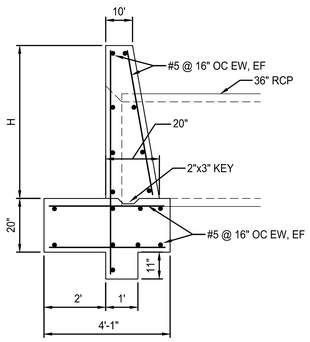

SECTION 1-1

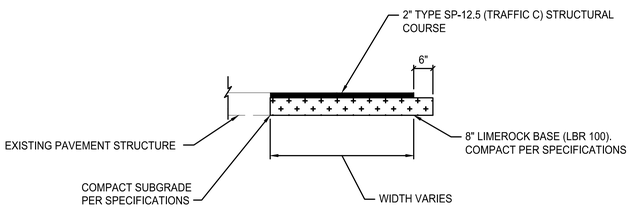

ASPHALT PAVEMENT WIDENING DETAIL 3
NTS C103

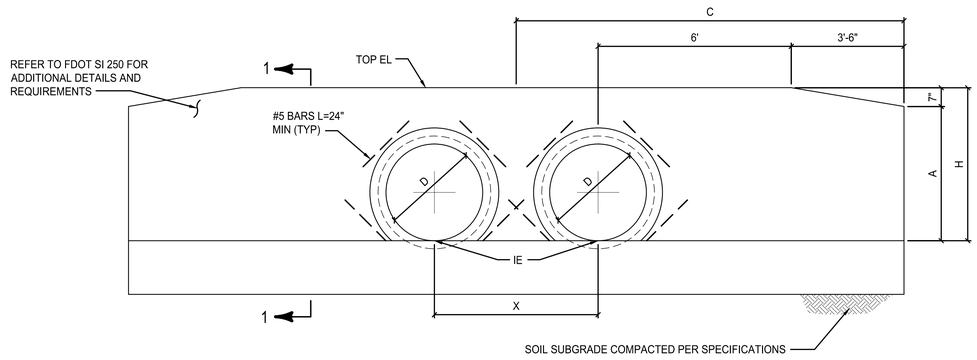

FRONT VIEW - DOUBLE

CULVERT HEADWALL DETAIL 6
NTS C112

SYM	ZONE	REVISIONS	DATE	APPD
A		REDRAWN-NO CHANGES	05.14.14	

JONES EDMUNDS
730 NE WALDO ROAD, GAINESVILLE, FLORIDA 32641 / (352) 377-5821
3910 S WASHINGTON AVE, SUITE 210, TITUSVILLE, FLORIDA 32780 / (321) 269-2950

SIGNATURES	DATE
DRAWN P. UPSTILL	12.18.13
CHECKED M. O'BRIEN	12.18.13
SUBMITTED: ARCHENG OF RECORD W. NICKEL	12.18.13
ST of LICENSURE: FL LICENSE NO: 68638	12.18.13
APPROVED R. KOLLER	12.18.13
K. MILLER	12.19.13

NATIONAL AERONAUTICS AND SPACE ADMINISTRATION
JOHN F. KENNEDY SPACE CENTER, NASA
KENNEDY SPACE CENTER, FLORIDA

KSC CENTRAL CAMPUS
REPLACEMENT HEADQUARTERS BUILDING
OFF SITE UTILITIES

CIVIL DETAILS

C201

FILE NO.	SIZE	DWG. NO.	
C-12070.00	F	79K39624	A

PCN. NO. 98745/98745.1a/98745.2a SHEET 22

FILE: N:\98540 Huston Brody\Air-12 Central Campus Phy\Ph4 Contract Drawings\Level4-09%SUB\C201.dwg PRINTED: 5/12/2014 10:44 AM, BY USER: Jon Allen LAST MODIFIED: 12/19/2013 12:27 PM, BY USER: pupstil

KSC FORM 1-11 (3/76)(C/G 3/94)

NOTICE: When Government drawings, specifications, or other data are used for any purpose other than in connection with a definitely related Government procurement operation, the United States Government thereby incurs no responsibility nor obligation whatsoever; and the fact that the Government may have formulated, furnished, or in any way supplied the said drawings, specifications or other data is not to be regarded by implication or otherwise as in any manner licensing the holder or any other person or corporation, or conveying any rights or permission to manufacture, use, or sell any patented invention that may in any way be related thereto.

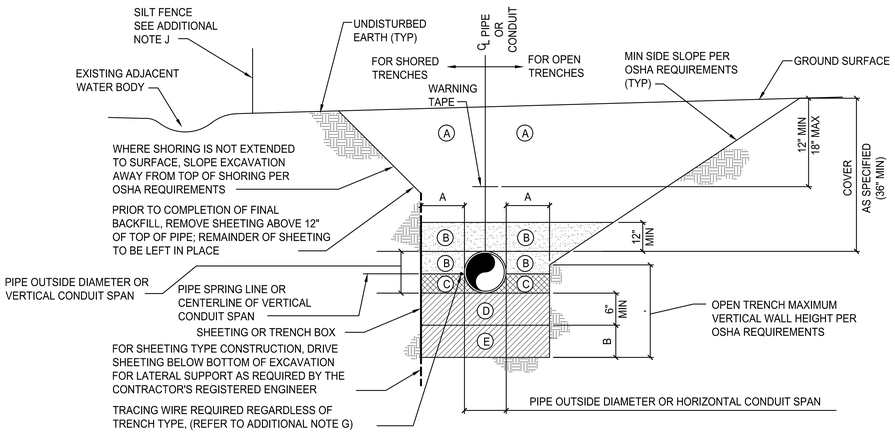

NOMINAL PIPE DIAMETER OR HORIZONTAL CONDUIT SPAN (INCHES)	MINIMUM SIDEWALL CLEARANCE	ADDITIONAL EXCAVATION DEPTH (1)
	A (INCHES)	B (INCHES)
LESS THAN 24	12	12

(1) REQUIRED WHERE UNSUITABLE MATERIAL IS ENCOUNTERED.

ZONE NO.	ZONE NAME	MATERIAL	COMPACTION
A	FINAL BACKFILL	AS SPECIFIED	AT LEAST 95% MODIFIED PROCTOR MAXIMUM DRY DENSITY ASTM D-1557
B	INITIAL BACKFILL		
C	HAUNCHING		
D	BEDDING		
E	FOUNDATION		

TRENCH ZONE NOTES:

A. FINAL BACKFILL SHALL BE INSTALLED IN LIFTS NOT EXCEEDING 6 INCHES, LOOSE MEASUREMENT. REFER TO ADDITIONAL NOTE H.

B. INITIAL BACKFILL SHALL BE INSTALLED IN LIFTS NOT EXCEEDING 6 INCHES, LOOSE MEASUREMENT. ALL LIFTS SHALL BE COMPACTED BY HAND TAMPING OR AN APPROVED METHOD OF MECHANICAL TAMPING. REFER TO ADDITIONAL NOTE H.

C. HAUNCHING SHALL BE IN COMPLETELY DEWATERED TRENCHES IN LIFTS NOT EXCEEDING 6 INCHES, LOOSE MEASUREMENT. ALL LIFTS SHALL BE COMPACTED BY HAND TAMPING. HAUNCHING SHALL BE BROUGHT UP EQUALLY ON BOTH SIDES OF THE PIPE.

D. BEDDING SHALL BE INSTALLED IN COMPLETELY DEWATERED TRENCHES IN LIFTS NOT EXCEEDING 6 INCHES, LOOSE MEASUREMENT, AND SHALL BE COMPACTED BY HAND OR MECHANICAL TAMPING. PROPERLY SHAPED BELL HOLES SHALL BE EXCAVATED IN THE BEDDING TO PERMIT ASSEMBLY OF THE PIPE. REFER TO ADDITIONAL NOTE H.

NATIVE, UNDISTURBED MATERIAL IN COMPLETELY DEWATERED TRENCHES MEETING THE COMPACTION AND MATERIAL REQUIREMENTS FOR COMPACTED BEDDING MATERIAL NEED NOT BE REPLACED OR REWORKED, EXCEPT FOR SHAPING OF THE BELL HOLES, AND WHERE REFILL IS REQUIRED.

E. FOUNDATION SHALL BE REQUIRED WHERE UNSUITABLE MATERIAL IS ENCOUNTERED. FOUNDATION SHALL BE IN ACCORDANCE WITH THE REQUIREMENTS FOR BEDDING. REFER TO ADDITIONAL NOTE H.

ADDITIONAL NOTES:

F. FOR TRENCHES IN VEHICULAR TRAFFIC AREAS OR BENEATH SURFACE IMPROVEMENTS (EG, SLAB, ETC.) SEE CONTRACT SPECIFICATIONS FOR ADDITIONAL COMPACTION REQUIREMENTS.

G. TRACING WIRE SHALL BE INSTALLED ON THE SIDE OF THE PIPE AND ATTACHED TO THE PIPE EVERY 10' W/ A NYLON WIRE TIE. IF THE WIRE IS DAMAGED OR NEEDS TO BE EXTENDED A 3M WATERPROOF TYPE UF SPLICE, OR APPROVED EQUAL, SHALL BE INSTALLED TO REPAIR THE WIRE. THE ENDS OF THE TRACING WIRE SHALL BE BROUGHT UP IN EVERY VALVE BOX ON THE LINE AND AT THE HYDRANT VALVES. THERE SHALL BE A MINIMUM COIL OF 3' LEFT UNDER THE VALVE BOX COVER. THE WIRE SHALL BE TESTED TO VERIFY CONDUCTIVITY.

H. ALTERNATIVE LIFT THICKNESSES, NOT EXCEEDING 12 INCHES LOOSE MEASUREMENT, ARE ACCEPTABLE IN TRENCH ZONES 1, 2, 4, AND 5 PROVIDED 1) THE LIFT THICKNESS DOES NOT EXCEED THE MAXIMUM VALUE RECOMMENDED IN WRITING BY THE APPLICABLE PIPE MANUFACTURER AND 2) FIELD TEST RESULTS CONFIRM THAT THE SPECIFIED COMPACTION REQUIREMENTS ARE BEING MET.

J. CONSTRUCT STORMWATER POLLUTION PREVENTION ITEMS ADJACENT TO ALL SOIL DISTURBANCES ACCORDING TO DETAILS ON EN3. PLACE ON DOWN SLOPE TO INTERCEPT SEDIMENT AND PROTECT NEARBY WATER BODIES AND UNDISTURBED AREAS. MAINTAIN STORMWATER POLLUTION PREVENTION ITEMS IN GOOD WORKING ORDER UNTIL ADEQUATE COVER MATERIALS ARE ESTABLISHED. IF A REPAIR IS NECESSARY, IT WILL BE INITIATED WITHIN 24 HOURS OF REPORT. BUILT UP SEDIMENT WILL BE REMOVED FROM STAKED SILT FENCE AND STAKED TURBIDITY BARRIERS WHEN IT HAS REACHED ONE-HALF THE HEIGHT OF THE SILT FENCE OR BARRIER.

TYPICAL UTILITY TRENCH DETAIL (1)

NTS

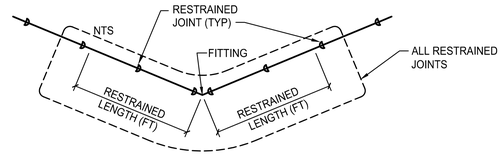

RESTRAINED JOINT SCHEDULE									
PIPE SIZE	FITTING								
	90° BEND	45° BEND	45° BEND (VERT)	22 1/2° BEND	22 1/2° BEND (VERT)	11 1/4° BEND	11 1/4° BEND (VERT)	VALVE, DEAD END OR REDUCER	TEE (BRANCH)
24"	89	37	113	18	36	9	18	273	273
16"	65	27	80	13	26	7	13	193	193
14"	58	24	71	12	23	6	12	172	172
12"	51	22	63	11	20	5	10	151	151
10"	44	18	53	9	17	5	9	128	128
8"	37	16	45	8	14	4	7	107	107
6"	29	12	34	6	11	3	6	82	82
4" (PVC)	17	8	16	4	8	2	4	38	37

NOTES:

A. RESTRAINED LENGTHS ARE IN FEET AND ARE FOR POLYETHYLENE WRAPPED DUCTILE IRON PIPE UNLESS OTHERWISE NOTED.

B. SEE SPECIFICATIONS FOR ADDITIONAL INFORMATION REGARDING RESTRAINED JOINTS.

C. THE SCHEDULE SHOWN IS FOR THE FOLLOWING SERVICE CONDITIONS 150 PSIG TEST PRESSURE; POORLY GRADED COARSE SAND; 36 INCHES COVER, TYPE 3 TRENCH CONDITIONS; AND 1.5 SAFETY FACTOR.

D. RESTRAINED LENGTHS SHOWN IN TABLE ARE IN FEET AND ARE MINIMUM LENGTHS REQUIRED IN EACH DIRECTION FROM FITTINGS OR VALVES.

E. ALL PIPE SHALL BE RESTRAINED TO THE NEXT JOINT BEYOND THE RESTRAINED LENGTH GIVEN.

F. RESTRAINED LENGTH FOR REDUCERS SHALL BE BASED ON THE SIZE OF THE LARGEST END OF THE REDUCER.

G. CONTRACTOR SHALL HAVE FLORIDA LICENSED PROFESSIONAL ENGINEER VERIFY ALL THE RESTRAINED LENGTHS SHOWN IN THE TABLE ABOVE ARE ADEQUATE FOR ALL VARYING SOIL CONDITIONS ON THE PROJECT. THE CONTRACTOR'S ENGINEER SHALL PROVIDE A SIGNED AND SEALED STATEMENT THAT ALL PIPING WAS INSTALLED IN ACCORDANCE WITH THE REQUIREMENTS OF THE TABLE ABOVE OR IN ACCORDANCE WITH THE FINDINGS OF THE CONTRACTOR'S PROFESSIONAL ENGINEER, WHICHEVER ARE MORE STRINGENT. CONTRACTOR'S COST FOR MEETING THESE REQUIREMENTS SHALL BE INCLUDED IN THEIR BID.

H. FOR CONNECTION OF PIPING TO EXISTING PIPING, WHEN THE REQUIRED RESTRAINED JOINT PIPE LENGTHS TO PREVENT PIPE MOVEMENT CANNOT BE ATTAINED IN ACCORDANCE WITH RESTRAINED JOINT SCHEDULE, THE APPROPRIATE TEE, VALVES, BEND AND/OR CROSS FITTING(S) SHALL BE FULLY RESTRAINED IN ACCORDANCE WITH THRUST BLOCK DETAIL TO PREVENT PIPE MOVEMENT. (1/C202) (2/C202)

J. WHERE HDD CONNECT TO PUSH-ON JOINT PIPING, THIS CONNECTION SHALL BE TREATED AS DEAD END W/ RESPECT TO THE RESTRAINED JOINT SCHEDULE.

RESTRAINED JOINT SCHEDULE

NTS

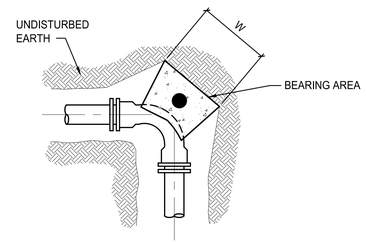

BENDS PLAN

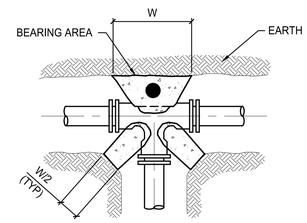

TEE PLAN

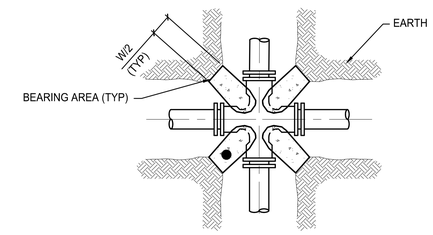

CROSS PLAN

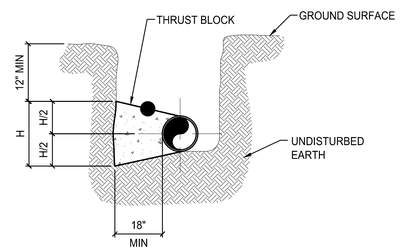

ILLUSTRATIVE SECTION

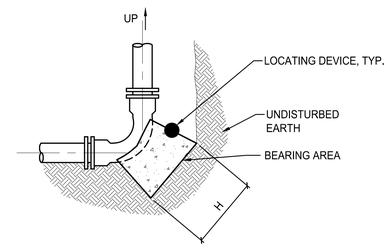

BENDS IN SECTION

REACTION BLOCK BEARING AREA DIMENSIONS					
FITTING	11 1/4° BEND	22 1/2° BEND	45° BEND	90° BEND	TEE/CROSS/ PLUGS/CAPS
SIZE (in)	H x W (in)	H x W (in)	H x W (in)	H x W (in)	H x W (in)
4	11x11	15x15	20x20	28x28	23x23
6	15x15	21x21	29x29	40x40	33x33
8	20x20	27x27	38x38	52x52	44x44
10	24x24	33x33	47x47	63x63	53x53
12	28x28	40x40	55x55	75x75	63x63
14	33x33	46x46	64x64	87x87	73x73
16	37x37	52x52	73x73	99x99	83x83
18	42x42	58x58	82x82	111x111	93x93
24	55x55	77x77	108x108	146x146	123x123

REACTION BLOCK NOTES:

A. BASED ON 150 PSI PRESSURE & 1500 PSF SOIL BEARING VALUE, 2.0 SAFETY FACTOR, WATER TABLE BELOW THE THRUST BLOCK, VERTICAL BLOCK FACE, AND A MINIMUM THICKNESS OF 18 INCHES.

B. BEARING AREAS FOR PLUGS SHALL BE THE SAME AS FOR TEES.

C. FORM REACTION BLOCKS TO KEEP CONCRETE CLEAR OF JOINTS AND BOLTS.

D. REQUIRED REACTION BLOCK BEARING AREA SHALL BE PLACED AGAINST UNDISTURBED MATERIAL. WHERE TRENCH WALL HAS BEEN DISTURBED, EXCAVATE ALL LOOSE MATERIAL AND EXTEND REACTION BLOCK TO UNDISTURBED MATERIAL.

E. PLACE PRESSURE TREATED WOOD BOARDS IN FRONT OF PLUG, AT TEE, CROSS OR END OF PIPE BEFORE POURING CONCRETE REACTION BLOCK.

F. BACKFILL SHALL CONSIST ENTIRELY OF CLEAN SAND AND ROCK FRAGMENTS. ANY MUCK ENCOUNTERED SHALL BE REPLACED WITH BACKFILL COMPACTED TO 95 %%% MODIFIED PROCTOR MAXIMUM DRY DENSITY, ASTM D1557.

G. CONTRACTOR TO OBTAIN LOCATING DEVICES AND TO EMBED THE DEVICE INTO THE TOP SURFACE ON THE THRUST BLOCK SUCH THAT HALF THE DEVICE IS EXPOSED AND THE LOCATION IS AT THE CENTROID OF THE THRUST BLOCK TOP SURFACE AREA. THE LOCATING DEVICES SHALL BE OMNI MARKER MODEL 161 WATER MARKER OR APPROVED EQUAL.

H. CONTRACTOR SHALL HAVE FLORIDA LICENSED PROFESSIONAL ENGINEER VERIFY ALL THE REACTION BLOCK SIZES SHOWN IN THE TABLE ABOVE ARE ADEQUATE FOR ALL VARYING SOIL CONDITIONS ON THE PROJECT. THE CONTRACTOR'S ENGINEER SHALL PROVIDE A SIGNED AND SEALED STATEMENT THAT ALL REACTION BLOCKS WERE INSTALLED IN ACCORDANCE WITH THE REQUIREMENTS OF THE TABLE ABOVE OR IN ACCORDANCE WITH THE FINDINGS OF THE CONTRACTOR'S PROFESSIONAL ENGINEER, WHICHEVER ARE MORE STRINGENT. CONTRACTOR'S COST FOR MEETING THESE REQUIREMENTS SHALL BE INCLUDED IN THEIR BID.

TYPICAL REACTION BLOCK (THRUST BLOCK) DETAILS (2/C202)

NTS

SYM	ZONE	REVISIONS	DATE	APPD
A		REDRAWN-NO CHANGES	05.14.14	

JONES EDMUNDS
730 NE WALDO ROAD, GAINESVILLE, FLORIDA 32641 / (352) 377-5821
3910 S WASHINGTON AVE, SUITE 210, TITUSVILLE, FLORIDA 32780 / (321) 269-2950

SIGNATURES	DATE
DRAWN P. UPSTILL	12.18.13
CHECKED M. O'BRIEN	12.18.13
SUBMITTED: ARCHENG OF RECORD W. NICKEL	12.18.13
ST of LICENSURE: FL LICENSE NO: 68638	12.18.13
APPROVED R. KOLLER	12.18.13
K. MILLER	12.19.13

NATIONAL AERONAUTICS AND SPACE ADMINISTRATION
JOHN F. KENNEDY SPACE CENTER, NASA
KENNEDY SPACE CENTER, FLORIDA

KSC CENTRAL CAMPUS
REPLACEMENT HEADQUARTERS BUILDING
OFF SITE UTILITIES

CIVIL DETAILS

C202

FILE NO.	SIZE	DWG. NO.	
C-12070.00	F	79K39624	A

PCN. NO. 98745/98745.1a/98745.2a SHEET 23

NOTICE: When Government drawings, specifications, or other data are used for any purpose other than in connection with a definitely related Government procurement operation, the United States Government thereby incurs no responsibility nor obligation whatsoever; and the fact that the Government may have formulated, furnished, or in any way supplied the said drawings, specifications or other data is not to be regarded by implication or otherwise as in any manner licensing the holder or any other person or corporation, or conveying any rights or permission to manufacture, use, or sell any patented invention that may in any way be related thereto.

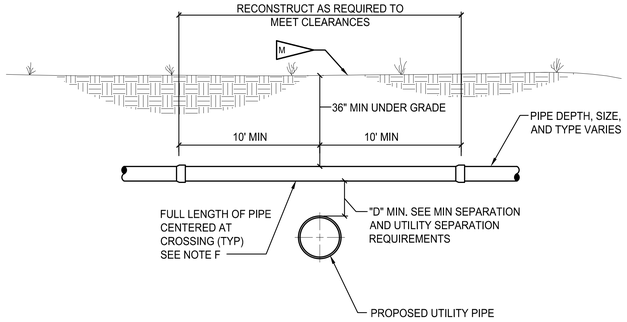

EXISTING UTILITY OVER PROPOSED

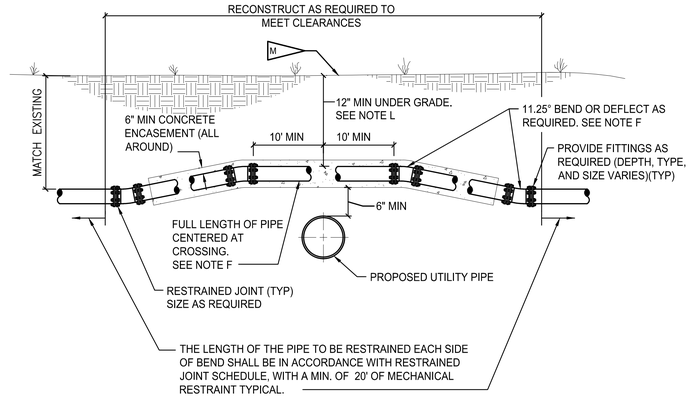

EXISTING UTILITY OVER PROPOSED (ENCASED)

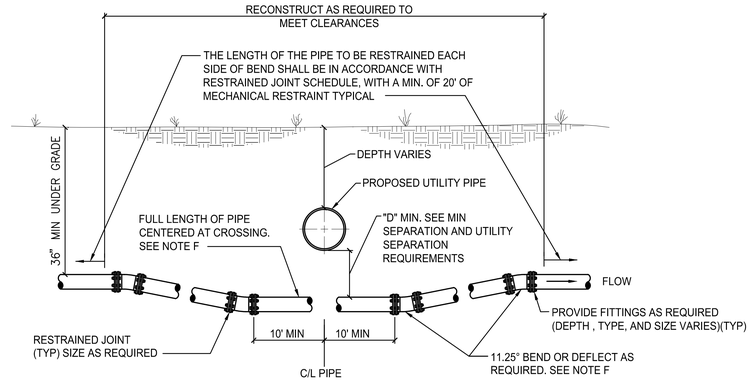

EXISTING UTILITY UNDER PROPOSED

UTILITY SEPARATION REQUIREMENTS

A. IT IS REQUIRED THAT "WATER MAINS" BE INSTALLED, CLEANED, DISINFECTED AND HAVE A SATISFACTORY BACTERIOLOGICAL SURVEY PERFORMED IN ACCORDANCE WITH THE LATEST APPLICABLE AWWA STANDARDS AND CHAPTER 62-555, F.A.C. STANDARDS. FOR THE PURPOSE OF THIS SECTION, THE PHRASE "WATER MAINS" SHALL MEAN MAINS, INCLUDING TREATMENT PLANT PROCESS PIPING, CONVEYING EITHER RAW, PARTIALLY TREATED, OR FINISHED DRINKING WATER; FIRE HYDRANT LEADS; AND SERVICE LINES THAT HAVE AN INSIDE DIAMETER OF THREE (3) INCHES OR GREATER. IN ADDITION, THE PHRASE "REGULATED PUBLIC ACCESS RECLAIMED WATER" REFERS TO THE WATER REGULATED UNDER PART III OF CHAPTER 62.210, F.A.C.

B. NEW, RELOCATED OR EXISTING UNDERGROUND WATER MAINS SHALL BE LAID TO PROVIDE A HORIZONTAL DISTANCE OF AT LEAST THREE (3) FEET BETWEEN THE OUTSIDE OF THE WATER MAIN AND THE OUTSIDE OF ANY EXISTING OR PROPOSED STORM SEWER, STORMWATER FORCE MAIN, OR PIPELINE CONVEYING REGULATED PUBLIC ACCESS RECLAIMED WATER.

C. NEW OR RELOCATED, UNDERGROUND SEWER/WATER MAINS SHALL BE LOCATED TO PROVIDE A HORIZONTAL DISTANCE OF AT LEAST SIX (6) FEET, AND PREFERABLY TEN (10) FEET, BETWEEN THE OUTSIDE OF THE SEWER/WATER MAIN AND THE OUTSIDE OF ANY EXISTING OR PROPOSED WATER/GRAVITY OR PRESSURE-TYPE SANITARY SEWER, NON-REGULATED RECLAIMED WATER, OR WASTEWATER FORCE MAIN. THE MINIMUM HORIZONTAL SEPARATION DISTANCE BETWEEN WATER MAINS AND GRAVITY-TYPE SANITARY SEWERS MAY BE REDUCED TO THREE (3) FEET WHERE THE BOTTOM OF THE WATER MAIN IS LOCATED AT LEAST SIX (6) INCHES ABOVE THE TOP OF THE SEWER (SPECIAL CASE).

D. NEW, RELOCATED OR EXISTING UNDERGROUND WATER MAINS CROSSING ANY EXISTING OR PROPOSED GRAVITY OR VACUUM-TYPE SANITARY SEWER, OR STORM SEWER SHALL BE LOCATED SO THE OUTSIDE OF THE WATER MAIN IS AT LEAST SIX (6) INCHES, AND PREFERABLE TWELVE (12) INCHES, ABOVE OR AT LEAST TWELVE (12) INCHES BELOW THE OUTSIDE OF THE OTHER PIPELINE. HOWEVER, IT IS PREFERABLE TO LAY THE WATER MAIN ABOVE THE OTHER PIPELINE.

E. NEW, RELOCATED OR EXISTING UNDERGROUND WATER MAINS CROSSING ANY EXISTING OR PROPOSED PRESSURE-TYPE SANITARY SEWER, WASTEWATER OR STORMWATER FORCE MAIN, OR PIPELINE CONVEYING RECLAIMED WATER SHALL BE LOCATED SO THE OUTSIDE OF THE WATER MAIN IS A LEAST TWELVE (12) INCHES ABOVE OR BELOW THE OUTSIDE OF THE OTHER PIPELINE. HOWEVER, IT IS PREFERABLE TO LAY THE WATER MAIN ABOVE THE OTHER PIPELINE.

F. AT THE UTILITY CROSSINGS DESCRIBED IN NOTES D AND E ABOVE, ONE FULL LENGTH OF WATER MAIN PIPE SHALL BE CENTERED ABOVE OR BELOW THE OTHER PIPELINE SO THE WATER MAIN JOINTS WILL BE AS FAR AS POSSIBLE FROM THE OTHER PIPELINE. ALTERNATIVELY, AT SUCH CROSSINGS, THE PIPES SHALL BE ARRANGED SO THAT ALL WATER MAIN JOINTS ARE AT LEAST THREE (3) FEET FROM ALL JOINTS IN VACUUM-TYPE SANITARY SEWERS, STORM SEWERS, STORMWATER FORCE MAINS, OR PIPELINES CONVEYING REGULATED PUBLIC ACCESS RECLAIMED WATER, AND AT LEAST SIX (6) FEET FROM ALL JOINTS IN GRAVITY OR PRESSURE-TYPE SANITARY SEWERS, NON-REGULATED RECLAIMED WATER, OR WASTEWATER FORCE MAINS.

G. NEW, RELOCATED OR EXISTING FIRE HYDRANTS SHALL BE LOCATED SO THAT THE HYDRANTS ARE AT LEAST THREE (3) FEET FROM ANY EXISTING OR PROPOSED STORM SEWER, STORMWATER FORCE MAIN, OR PIPELINE CONVEYING REGULATED PUBLIC ACCESS RECLAIMED WATER; AT LEAST THREE (3) FEET, AND PREFERABLY TEN (10) FEET, FROM ANY EXISTING OR PROPOSED VACUUM-TYPE SANITARY SEWER; AT LEAST SIX (6) FEET, AND PREFERABLY TEN (10) FEET, FROM ANY EXISTING OR PROPOSED GRAVITY OR PRESSURE-TYPE SANITARY SEWER OR WASTEWATER FORCE MAIN.

H. IF THE CONTRACTOR CAN NOT MEET THE MINIMUM SEPARATION REQUIREMENTS HE/SHE MUST NOTIFY THE CONTRACTING OFFICER. THE CONTRACTING OFFICER IS REQUIRED TO DISCUSS MITIGATION WITH FDEP AND OBTAIN FDEP APPROVAL PRIOR TO INSTALLING ANY UTILITIES NOT IN COMPLIANCE WITH FDEP MINIMUM SEPARATION REQUIREMENTS.

J. IF THE WATER MAIN IS BELOW THE SEWER PIPE, THEN A MINIMUM OF 12" VERTICAL SEPARATION IS REQUIRED.

K. THE CONTRACTOR MAY CHOOSE TO DEFLECT THE PROPOSED PIPE UNDER OR OVER THE EXISTING UTILITY PIPE IN LIEU OF USING FITTINGS AS LONG AS THE MINIMUM DISTANCE "D" IS MAINTAINED AND THE AMOUNT OF PIPE DEFLECTION MEETS THE REQUIREMENTS OF THE SPECIFICATIONS.

L. CONCRETE ENCASEMENT NOT REQUIRED FOR COVER GREATER THAN 24 INCHES.

M. RESTORE SURFACE TO ORIGINAL CONDITION, OR TO PROPOSED AS INDICATED IN THE PLANS.

N. TRENCHING AND BACKFILL SHALL BE PER TYPICAL UTILITY TRENCH DETAIL 1/C202

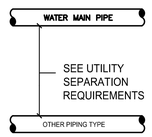

PLAN VIEW

OTHER PIPING TYPE	MINIMUM HORIZONTAL SEPARATION (FEET) SEE NOTE C
1. GRAVITY SANITARY SEWER	6
2. GRAVITY SANITARY SEWER (SPECIAL CASE, NOTE C)	3
3. SEWAGE FORCE MAIN	6
4. GRAVITY STORM SEWER	3
5. RECLAIMED WATER (PUBLIC ACCESS)	3
6. ELECTRIC/ COMMUNICATION	3
7. OTHER	6

MINIMUM HORIZONTAL SEPARATION REQUIREMENTS

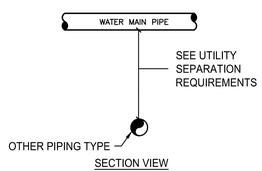

SECTION VIEW

OTHER PIPING TYPE	"D" - MINIMUM VERTICAL SEPARATION (INCHES) SEE NOTE D
1. GRAVITY SANITARY SEWER	6
2. SEWAGE FORCE MAIN	12
3. GRAVITY STORM SEWER	6
4. RECLAIMED WATER	12
5. ELECTRIC/ COMMUNICATION	6
6. OTHER	12

MINIMUM VERTICAL SEPARATION REQUIREMENTS

TYPICAL UTILITY CONFLICT DETAIL 1

NTS

SYM	ZONE		DATE	APPD
A		REDRAWN-NO CHANGES	05.14.14	

REVISIONS

JONES EDMUNDS
730 NE WALDO ROAD, GAINESVILLE, FLORIDA 32641 / (352) 377-5821
3910 S WASHINGTON AVE, SUITE 210, TITUSVILLE, FLORIDA 32780 / (321) 269-2950

SIGNATURES	DATE
DRAWN P. UPSTILL	12.18.13
CHECKED M. O'BRIEN	12.18.13
SUBMITTED: ARCHENG OF RECORD W. NICKEL	12.18.13
ST of LICENSURE: FL LICENSE NO: 68638	12.18.13
APPROVED R. KOLLER	12.18.13
K. MILLER	12.19.13

NATIONAL AERONAUTICS AND SPACE ADMINISTRATION
JOHN F. KENNEDY SPACE CENTER, NASA
KENNEDY SPACE CENTER, FLORIDA

KSC CENTRAL CAMPUS
REPLACEMENT HEADQUARTERS BUILDING
OFF SITE UTILITIES

CIVIL DETAILS

C203

FILE NO.	SIZE	DWG. NO.	
C-12070.00	F	79K39624	A

PCN. NO. 98745/98745.1a/98745.2a SHEET 24 OF 24