The thermal vacuum lab in B1250 at NASA LaRC requires two (2) identical conductive platens to facilitate independent temperature zones within the 6x6 thermal vacuum chamber to conductively heat and cool attached test articles. The platens will rest side-by-side of each other, and on top the existing chamber main platen. The platens will tie in to the facility LN2 supply to be cooled, and each platen will include onboard heaters to be used for heating. NASA will provide the power controllers for the electric heaters. For clarity, figures 1 and 2 illustrate the current configuration of the 6x6 TVAC chamber, including the main platen (fig. 2) that shows where the two auxiliary platens will sit on top.

Requirements for conductive cold plates (platen)

1. Each platen shall fit within a 25”L x 32”W x 6”H design envelope
2. Platen top surface shall be 24”L x30” W
3. Platen shall be designed to accept liquid nitrogen (LN2) as a cooling medium
    a. Lines or channels shall be of adequate diameter to accommodate a 30psi supply at 1-2 gpm from the LN2 supply and vent to atmosphere (NASA estimates between 3/8” and ½” inside diameter (ID) tube)
4. Platen top surface material shall be aluminum with thermal conductivity of 152W/M-k or better (k value given equivalent to AL 6061-T6)
5. Top surface shall have a surface finish of 32 micro inches.
6. Platen shall survive temperatures -180°C - +200°C
    a. Survival temperatures are specified for fail safe planning to ensure electrical components, etc. can withstand an unplanned thermal runaway condition. If proposed components cannot meet these temperature requirements, the contractor should disclose in their bid what the minimum and maximum non-operating temperatures will be for their planned design.
7. Platen shall normally operate -65°C - +150°C @ 400W heat load
    a. NASA provides liquid nitrogen (LN2) as a cooling medium
8. Platen shall be heated using heating elements operating between 0-120V
    a. NASA provides 0-120V power supply
    b. Electrical heater system shall terminate with 6ft pigtail for the power and return lines. NASA will terminate with lugs, rings, or connectors as required to interface to facility.
    c. Electrical system shall contain only Teflon coated wire to meet contamination requirements. NASA can provide part numbers for acceptable wire.
9. Heater system shall be adequately sized to allow the platen to heat from -65°C - +150°C at a rate no less than 5°C/min
10. Cooling lines and heater elements shall be adequately placed to maintain a +/- 2°C gradient across the platen top surface
11. Platen cooling lines shall terminate with a 1/2” (I.D.) stainless steel female VCR connector, be parallel to the top surface, and extrude no more than 2” from the top surface edge.
    a. NASA can provide part number for specific VCR connections,
12. Platen shall contain at least 1” thick insulation on bottom of each foot, comprised of Teflon SP1, to thermally isolate platen from the surface which is rests.

    a. Platen shall be capable of supporting no less than 200lbs
13. Platen shall have through-holes that are drilled, tapped, and with heli-coil inserts to accept a 1/4”-28 fastener
    a. Helicoil inserts shall be bronze phosphorus or silver, for contamination requirements
14. Platen though-hole pattern shall be 2”x2” on center. Holes on the outer perimeter shall be 2” from the platen surface.
15. The platen shall contain no non-metallic epoxies or bonding agents. This is for contamination reasons.
    a. Any proposed non-metallic parts, other than parts specifically addressed in these requirements, shall be disclosed and approved by NASA prior to fabrication.
16. Contractor shall submit drawings to NASA prior to fabrication.
    a. Contractor shall provide top level drawings or 3D model views to NASA as requested for use in NASA documentation (users’ guides, facility descriptions, etc.)
17. Contractor shall assign and affix a part number and serial number to each platen.
18. Contractor shall retain platen drawings on file in the event future platens are required.
19. All contractors shall include cost for reducing lead time, up to the shortest possible lead time for delivery, in bids to NASA. (10-12 Weeks ARO or sooner)

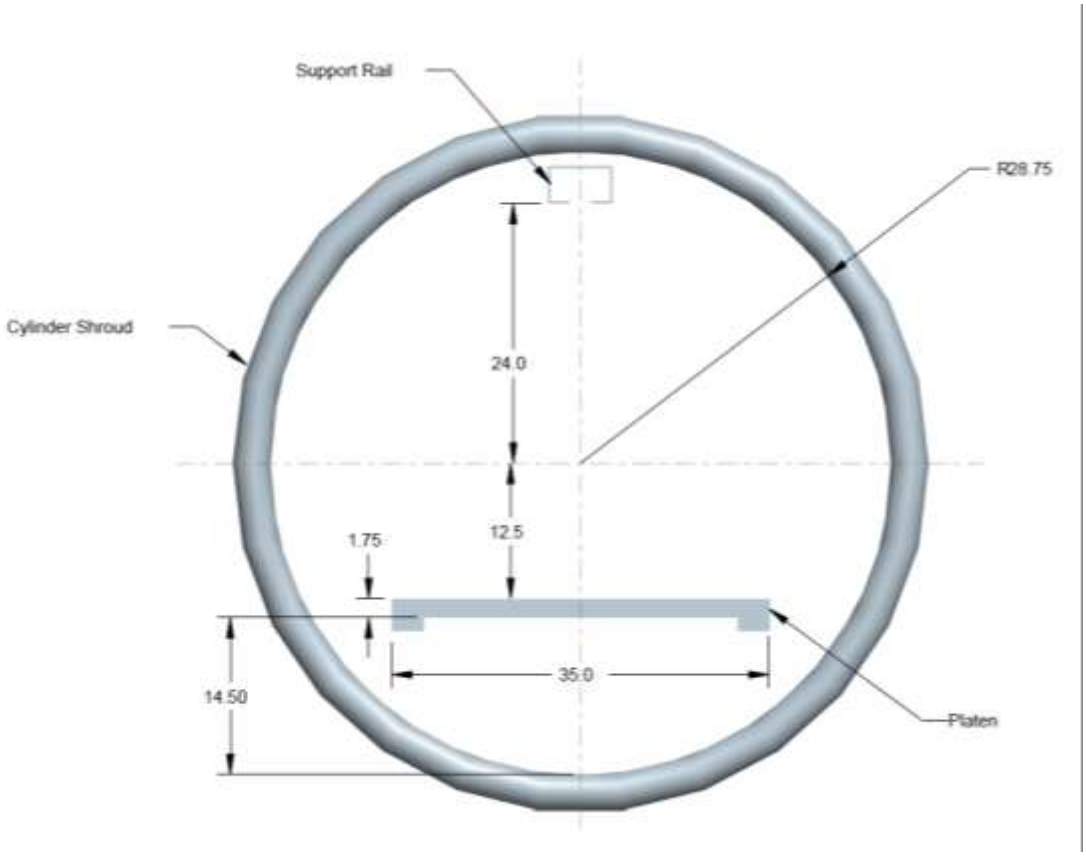

Figure 1 6x6 Thermal vacuum chamber, internal thermal surfaces, front view (dimensions in inches)

Figure 1, above, shows the front view of the NASA LaRC 6x6 chamber, as viewed from the front door. For clarity, the LN2 fluid lines of the new platens should point towards either the left side or right side of this view (NASA can verify if a hard requirement for left or right exists), and be parallel to top surface of the platen. The 6 foot pigtails of the power and return lines of the heater system shall terminate out the opposite side from the fluid lines, to prevent clutter on a single side. In other words, if the fluid lines terminate out the left side of the chamber, then the electrical lines shall come out the right side, and vice versa.

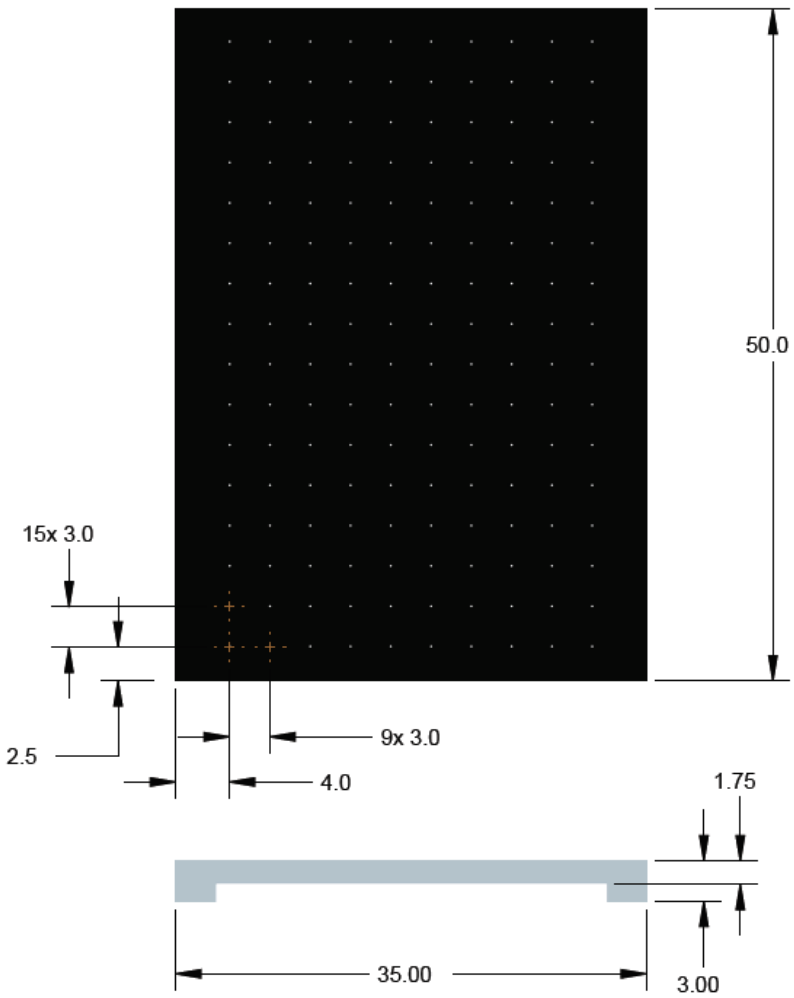

Figure 2 NASA LaRC 6x6 thermal vacuum chamber, main platen, top and front view (dimensions in inches).

Figure 2, above, shows the top view of the existing main platen (permanently installed) of the 6x6 chamber. The two new platens being procured will sit directly on top of this platen, and be side-by-side of each other. There is no planned mechanical fastening of the new platens to the existing main platen. The temperature control of the existing main platen is directly coupled to the chamber shroud (see Figure 1) so the main platen will be driven cold and hot during test, usually significantly colder than the two new platens, so this stresses the need to thermally isolate the new platens from the main platen, hence the requirement for 1” thermal insulators. It is also suggested that the total surface area of the platen feet be minimized to further reduce heat transfer.