NOTICE - WHEN GOVERNMENT DRAWINGS, SPECIFICATIONS, OR OTHER DATA ARE USED FOR ANY PURPOSE OTHER THAN IN CONNECTION WITH A DEFINITELY RELATED GOVERNMENT PROCUREMENT OPERATION, THE UNITED STATES GOVERNMENT THEREBY INCURS NO RESPONSIBILITY NOR ANY OBLIGATION WHATSOEVER, AND THE FACT THAT THE GOVERNMENT MAY HAVE FORMULATED, FURNISHED, OR IN ANY WAY SUPPLIED THE SAID DRAWINGS, SPECIFICATIONS OR OTHER DATA IS NOT TO BE REGARDED BY IMPLICATION OR OTHERWISE AS IN ANY MANNER LICENSING THE HOLDER OR ANY OTHER PERSON OR CORPORATION, OR CONVEYING ANY RIGHTS OR PERMISSION TO MANUFACTURE, USE, OR SELL ANY PATENTED INVENTION THAT MAY IN ANY WAY BE RELATED THERETO.

REVISIONS

SYM	DESCRIPTION	DATE	APPROVAL
A	REVISED SHEET 1	05-11-00	
A1	REWORDED NOTE 14	--	RWS AJE WDH DSM
B	REVISED SHEET 2	08-27-01	JKL VR DSM
C	REVISED SHEETS 1 & 2	12-10-12	DKL, MWD, DSM
C1	ADDED REVISION LETTER TO PART STAMPING	--	
C11	MATERIAL PART NUMBERS UPDATED:	--	
	WAS TORRINGTON, IS RBC	--	
C13	REVISED FLAG NOTE 14	--	
C14	REVISED NOTE 4	--	
D	REVISED SHEETS 1 & 2		
D2	ADDED FIND NO. 22 & 23 PARTS		
D3	ADDED FIND NO. 23 TO		
	FLAG NOTE 12.		
D14	REVISED FLAG NOTE 5.		
D15	REVISED NOTE 4.		
D16	REVISED FLAG NOTE 11.		
D17	ADDED FIND NO. 22.		
D18	ADDED FIND NO. 23.		

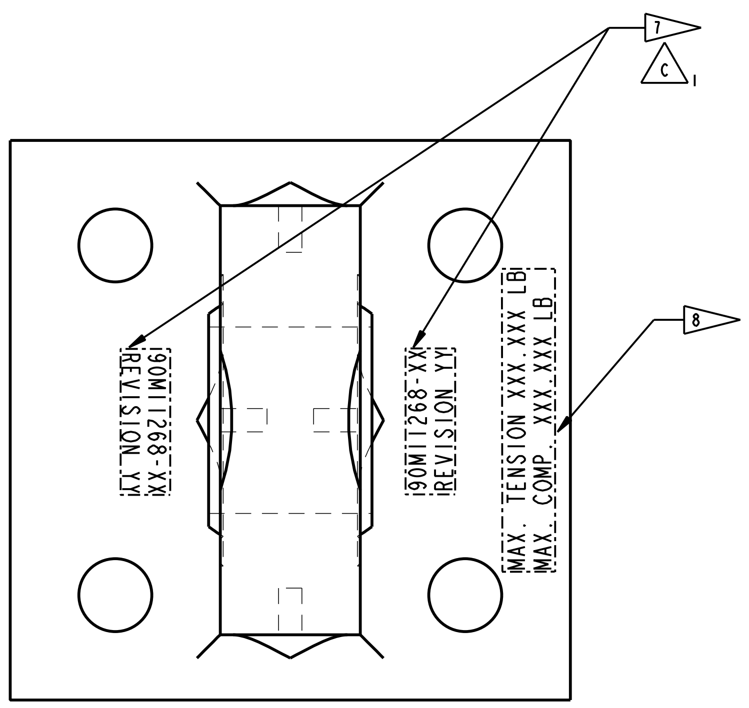

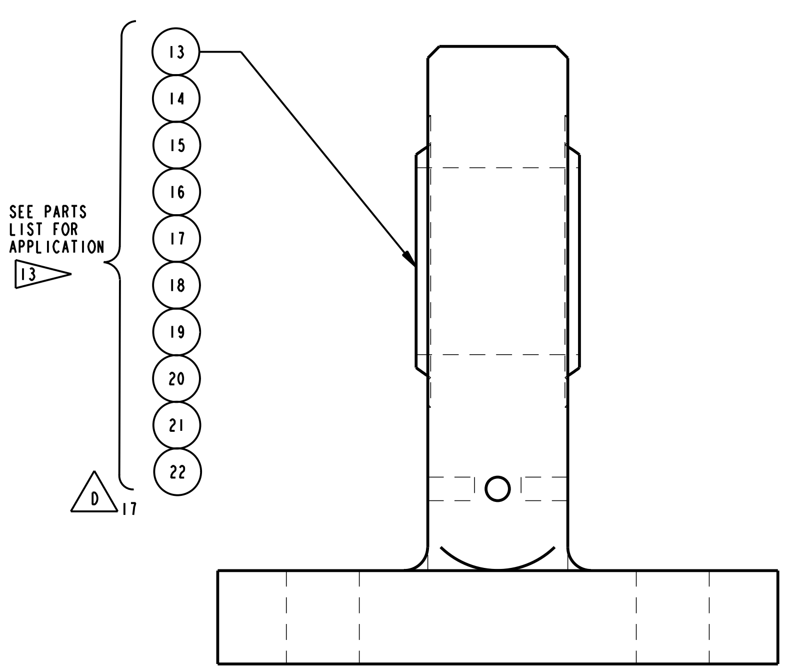

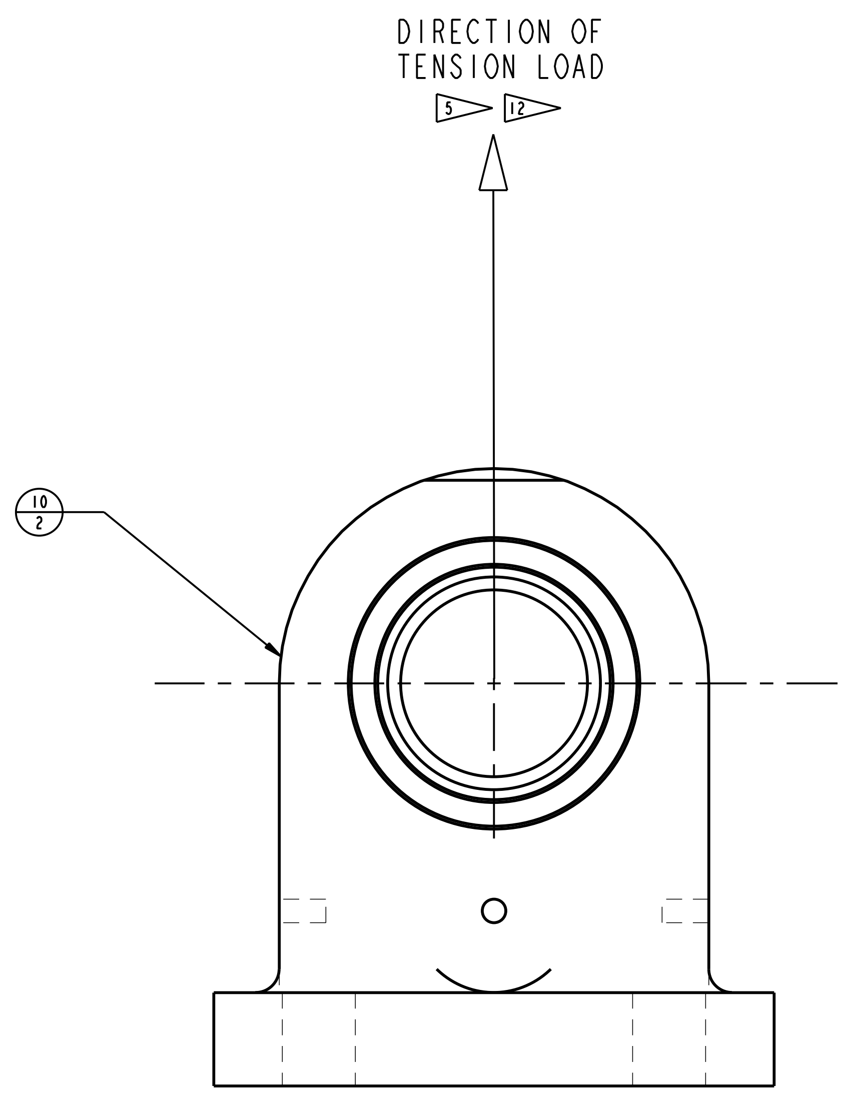

FIND NO. (1/-) THRU (9/-) [11] AND (23/-) D 18

SCALE: N.T.S.

GENERAL NOTES (UNLESS OTHERWISE SPECIFIED)

1. REMOVE ALL BURRS AND BREAK ALL SHARP EDGES.

2. 250√ ALL MACHINED SURFACES UNLESS OTHERWISE NOTED.

3. MATERIAL: 4130 OR 4340 AIRCRAFT QUALITY STEEL PLATE, BILLET, OR FORGING. PART MAY BE FABRICATED FROM WELDED PLATE OR MACHINED FROM BILLET OR FORGING PROVIDED THE FINISHED PART MEETS THE STRENGTH REQUIREMENT OF NOTE 14.

D 15 C 14 4. WELDS SHALL CONFORM TO MSFC-SPEC-3679, CLASS B.

D 14 [5.] BEFORE PAINTING, PROOF LOAD TO 150% OF TENSILE LOAD CAPACITY GIVEN IN NOTE 12 IF PART IS FABRICATED FROM WELDED PLATE. INSPECT WELDS USING MAGNETIC PARTICLE TESTING PER ASTM E 1444 AFTER PROOF LOAD TEST USING WELD INSPECTION CRITERIA SPECIFIED FOR A MSFC-SPEC-3679, CLASS B, WELD.

6. GEOMETRIC DIMENSIONING AND TOLERANCING PER ASME Y14.5M-1994.

C 1 [7.] STEEL STAMP PART NO. AND REVISION LETTER IN APPROXIMATE LOCATION INDICATED USING .25 HIGH CHARACTERS EXCEPT USE .13 HIGH CHARACTERS FOR F.N.-1.

[8.] STEEL STAMP 'MAX. TENSION XXX.XXX LB' AND 'MAX. COMP. XXX.XXX LB' IN APPROXIMATE LOCATION INDICATED USING .13 HIGH CHARACTERS EXCEPT USE .06 HIGH CHARACTERS FOR F.N.-1. LOAD CAPACITIES FOR EACH FIND NO. ARE GIVEN IN NOTE 12.

9. LIBERALLY APPLY TRIFLOW OR LIQUIED WRENCH OR EQUAL LUBRICANT TO THRU AND TAPPED HOLES TO PREVENT CORROSION.

10. COMPONENTS ARE NOT INTENDED FOR USE AS LIFTING OR HOISTING EQUIPMENT.

D 16 [11.] PREPARE PAINT SURFACES PER PAINT MANUFACTURERS RECOMMENDATION AND ABRASIVE CLEAN WHERE NECESSARY. PRIME USING A POLYURETHANE ENAMEL TOP COAT (REFERENCE: SHERWIN WILLIAMS POLANE F63) GLOSS RED NO. 21105 PER FEDERAL STANDARD 595B. DO NOT PAINT THRU HOLES OR THREADED HOLES OR SPHERICAL BEARING.

D 3 [12.] LOAD LIMITS FOR EACH SWIVEL EYE BRACKET ARE SHOWN BELOW. THE LOADS GIVEN REPRESENT THE MAXIMUM LOAD ALLOWED WHEN LOADED VERTICALLY AS SHOWN. VARIATION FROM THIS LOAD CASE WILL CAUSE A REDUCTION IN THE MAXIMUM LOAD ALLOWED.

FIND NUMBER	MAX. TENSILE LOAD (LB)	MAX. COMPRESSIVE LOAD (LB)	PIN SIZE (IN)	WEIGHT (LB)
-1	2,100	3,000	.38	1
-2	95,000	120,000	2.50	60
-3	122,000	155,000	3.00	70
-4	190,000	240,000	3.50	110
-5	268,000	340,000	4.00	130
-6	350,000	465,000	5.00	255
-7	575,000	765,000	6.00	695
-8	575,000	765,000	7.00	925
-9	710,000	945,000	8.00	1100
-23	575,000	765,000	6.50	870

[13.] INSTALL PER MANUFACTURER'S INSTRUCTIONS.

A 1 [14.] HEAT TREAT PER AMS-H-6875B TO 150-180 KSI TENSILE BEFORE FINAL MACHINING. NO TENSILE SPECIMEN REQUIRED. THE ULTIMATE TENSILE STRENGTH OF THE FINISHED PART SHALL BE BETWEEN 150 AND 180 KSI, WHETHER WELDED FROM PLATE OR MACHINED FROM BILLET OR FORGING. TO ENSURE THIS, THE FOLLOWING PROCEDURE WILL BE FOLLOWED:

C 13

A. MACHINE DIMENSIONS 'CB' AND 'HD' TO WITHIN .10 ± .03 OF THEIR INDICATED FINISHED VALUES. MACHINE ALL OTHER DIMENSIONS TO THEIR INDICATED FINISHED VALUES.
B. PERFORM A ROCKWELL SURFACE HARDNESS TEST IN THE AREAS INDICATED BY FLAG NOTE 14 ON THE NEAR AND FAR SIDES OF THE PART.
C. IF THE INDICATED ULTIMATE TENSILE STRENGTH IS BETWEEN 150 AND 180 KSI, THEN MACHINE DIMENSTIONS 'CB' AND 'HD' TO THEIR INDICATED FINISHED VALUES. PROCEED TO STEP F.
D. IF THE INDICATED ULTIMATE TENSILE STRENGTH IS BELOW 150 KSI. THEN THE PART SHOULD BE RE-HEAT TREATED. AFTER HEAT TREATING, MACHINE DIMENSIONS 'CB' AND 'HD' TO THEIR INDICATED FINISHED VALUES. PROCEED TO STEP F.
E. IF THE INDICATED ULTIMATE TENSILE STRENGTH IS ABOVE 180 KSI, THEN THE STRESS AND MATERIALS ORGANIZATIONS THAT SIGNED THE ORIGINAL DRAWING SHOULD BE CONTACTED TO OBTAIN ACCEPTANCE OF THE PART. MACHINE DIMENSIONS 'CB' AND 'HD' TO THEIR INDICATED FINISHED VALUES.
F. PERFORM A FINAL ROCKWELL SURFACE HARDNESS TEST IN THE AREAS INDICATED BY FLAG NOTE 14 ON THE NEAR AND FAR SIDES OF THE PART. WRITTEN CERTIFICATION OF THIS HARDNESS AND THE CALCULATED STRENGTH SHALL BE PROVIDED FOR EACH PART PRODUCED.

[15.] F.N.S -11 AND -12 ARE REQUIRED IF PART IS WELDED FROM PLATE. IF WELDED, THEN WELD NOTE 4 AND WELD CALLOUT ON F.N.-10 ARE APPLICABLE. IF MACHINED FROM BILLET OR FORGING, THEN RADIUS CALLOUT ON F.N.-10 IS APPLICABLE.

SUGGESTED VENDOR SOURCES:

1. JOSEPH T. RYERSON & SON OR EQUAL
BOX 24208
CHATTANOOGA, TN 37422
(423) 499-3500

2. APPLIED INDUSTRIAL TECHNOLOGY OR EQUAL
2408 E. WILLOW ST.
SCOTTSBORO, AL
(256) 259-1445

3. AURORA BEARING COMPANY OR EQUAL
970 SOUTH LAKE ST.
AURORA, IL 60506
(708) 859-2030

- PRELIMINARY -
THIS DRAWING HAS NOT COMPLETED THE REVIEW PROCESS AND IS SUBJECT TO CHANGE.
07-31-13
DATE

D 2 C 11

FIND NO.	SHEET NO.	NO. REQ'D FOR F.N. 1	NO. REQ'D FOR F.N. 2	NO. REQ'D FOR F.N. 3	NO. REQ'D FOR F.N. 4	NO. REQ'D FOR F.N. 5	NO. REQ'D FOR F.N. 6	NO. REQ'D FOR F.N. 7	NO. REQ'D FOR F.N. 8	NO. REQ'D FOR F.N. 9	NO. REQ'D FOR F.N. 10	NO. REQ'D FOR F.N. 23	TOT REQ'D		PART NO.	DESCRIPTION	VEND NO.	REMARKS
23	1												-	A	90MI1268-23	SWIVEL EYE BRACKET, 6.50 PIN SIZE		
22	1											1	1	P	90MI1268-22	SPHERICAL PLAIN RADIAL BEARING, 6.50 BORE	2	P.N. B104-9L (RBC)
21	1									1			1	P	90MI1268-21	SPHERICAL PLAIN RADIAL BEARING, 8.00 BORE	2	P.N. B128-9L (RBC)
20	1								1				1	P	90MI1268-20	SPHERICAL PLAIN RADIAL BEARING, 7.00 BORE	2	P.N. B112-9L (RBC)
19	1							1					1	P	90MI1268-19	SPHERICAL PLAIN RADIAL BEARING, 6.00 BORE	2	P.N. B96-9L (RBC)
18	1						1						1	P	90MI1268-18	SPHERICAL PLAIN RADIAL BEARING, 5.00 BORE	2	P.N. B80-9L (RBC)
17	1					1							1	P	90MI1268-17	SPHERICAL PLAIN RADIAL BEARING, 4.00 BORE	2	P.N. B64-L (RBC)
16	1				1								1	P	90MI1268-16	SPHERICAL PLAIN RADIAL BEARING, 3.50 BORE	2	P.N. B56-L (RBC)
15	1			1									1	P	90MI1268-15	SPHERICAL PLAIN RADIAL BEARING, 3.00 BORE	2	P.N. B48-L (RBC)
14	1		1										1	P	90MI1268-14	SPHERICAL PLAIN RADIAL BEARING, 2.50 BORE	2	P.N. B40-L (RBC)
13	1	1											1	P	90MI1268-13	SPHERICAL PLAIN RADIAL BEARING, .375 BORE	3	P.N.COM-6 (AURORA)
12	2										1		1	F	90MI1268-12	BRACKET BASE PLATE	1	MAT'L PER NOTE 3, SEE NOTE 15
11	2										1		1	F	90MI1268-11	BRACKET TANG	1	MAT'L PER NOTE 3, SEE NOTE 15
10	1, 2	1	1	1	1	1	1	1	1	1		1	1	A	90MI1268-10	BRACKET	1	MAT'L PER NOTE 3
9	1												-	A	90MI1268-9	SWIVEL EYE BRACKET, 8.00 PIN SIZE		
8	1												-	A	90MI1268-8	SWIVEL EYE BRACKET, 7.00 PIN SIZE		
7	1												-	A	90MI1268-7	SWIVEL EYE BRACKET, 6.00 PIN SIZE		
6	1												-	A	90MI1268-6	SWIVEL EYE BRACKET, 5.00 PIN SIZE		
5	1												-	A	90MI1268-5	SWIVEL EYE BRACKET, 4.00 PIN SIZE		
4	1												-	A	90MI1268-4	SWIVEL EYE BRACKET, 3.50 PIN SIZE		
3	1												-	A	90MI1268-3	SWIVEL EYE BRACKET, 3.00 PIN SIZE		
2	1												-	A	90MI1268-2	SWIVEL EYE BRACKET, 2.50 PIN SIZE		
1	1												-	A	90MI1268-1	SWIVEL EYE BRACKET, .375 PIN SIZE		

A=ASSEMBLY/SUB-ASSEMBLY/INSTALLATION E=EXISTING ITEM/FACILITY F=FABRICATED ITEM M=MODIFIED ITEM P=PURCHASED ITEM

STRESS: VIC RICHARD	4-12-00	PROGRAM MANAGER	
MATERIALS: W.D. HAMILTON	4-12-00	TEST ENGINEER/REQUESTER: RICKY WILBANKS	4-12-00
INDUSTRIAL SAFETY: ALVIN EIDSON	4-12-00	ET50 CONTRACTOR DESIGN LEAD: WADE SHORT	4-12-00
SAFETY AND MISSION ASSURANCE		ET50 CIVIL SERVICE LEAD: SCOTT MCCLUNEY	4-12-00
FLIGHT INTERFACES		CHECKER: PAUL S KINARD	4-12-00
PRESSURE CERTIFICATION MANAGER		ET50 BRANCH CHIEF/TEAM LEAD: SCOTT MCCLUNEY	4-13-00

UNLESS OTHERWISE SPECIFIED
TOLERANCES ARE
FRACTIONS ± 1/16 ± 1°/2
DECIMALS .X- ± .06 .XX- ± .03 .XXX- ± .010 ∠- ± .50°
(DIMENSIONS ARE IN INCHES, DO NOT SCALE DRAWING)
DRAWN BY: M. JOHNSON | NEXT ASSEMBLY | DATE: 07-29-13

STANDARD SWIVEL EYE BRACKETS

DETAILER: RWS | DATE: 03-30-00 | OFFICE CODE: ED38
CHECKER: PSK | SCALE: NOTED

SPECIAL TEST EQUIPMENT
DESIGN BRANCH - ET50
GEORGE C. MARSHALL
SPACE FLIGHT CENTER
NATIONAL AERONAUTICS
AND SPACE ADMINISTRATION
HUNTSVILLE, ALABAMA

90MI1268 REVISION D

DRWG SIZE E SHEET 1 OF 2

NOTICE - WHEN GOVERNMENT DRAWINGS, SPECIFICATIONS, OR OTHER DATA ARE USED FOR ANY PURPOSE OTHER THAN IN CONNECTION WITH A DEFINITELY RELATED GOVERNMENT PROCUREMENT OPERATION, THE UNITED STATES GOVERNMENT THEREBY INCURS NO RESPONSIBILITY NOR ANY OBLIGATION WHATSOEVER; AND THE FACT THAT THE GOVERNMENT MAY HAVE FORMULATED, FURNISHED, OR IN ANY WAY SUPPLIED THE SAID DRAWINGS, SPECIFICATIONS, OR OTHER DATA IS NOT TO BE REGARDED BY IMPLICATION OR OTHERWISE AS IN ANY MANNER LICENSING THE HOLDER OR ANY OTHER PERSON OR CORPORATION, OR CONVEYING ANY RIGHTS OR PERMISSION TO MANUFACTURE, USE, OR SELL ANY PATENTED INVENTION THAT MAY IN ANY WAY BE RELATED THERETO.

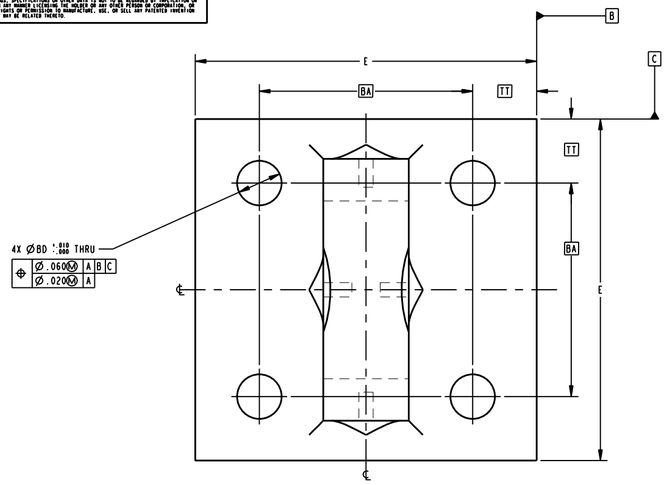

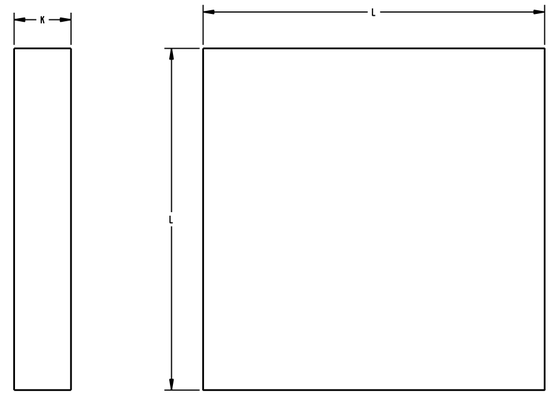

FIND NO. 12 - 15

SCALE: N.T.S.

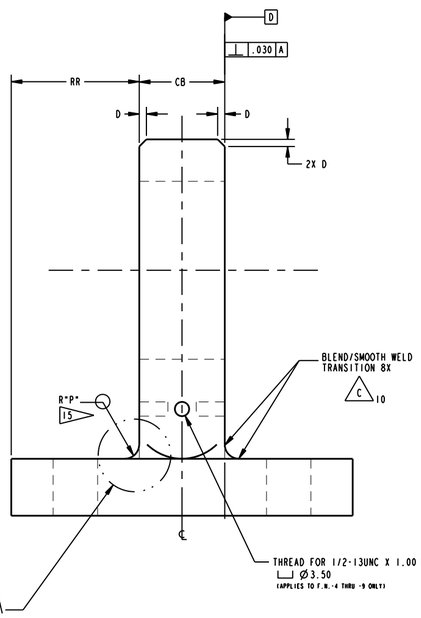

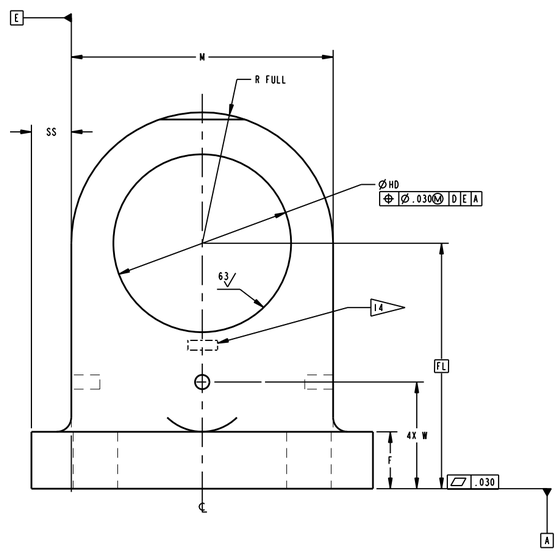

FIND NO. 10 - 14

SCALE: N.T.S.

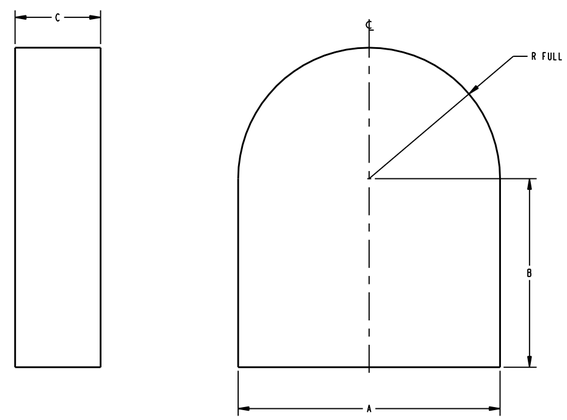

FIND NO. 11 - 15

SCALE: N.T.S.

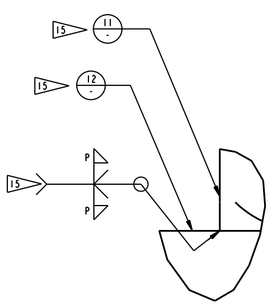

DETAIL A

WELDED FABRICATION METHOD DETAIL

	PIN DIAMETER	F.N.-10 BA	BD	CB	E	F	FL	M	RR	SS	TT	HD	P	D	W	F.N.-11 A	B	C	F.N.-12 K	L
F.N.-1	0.375	1.625	0.406	0.33	2.55	0.38	1.125	1.13	1.11	0.71	0.463	.8119/.8114	.13	.06	-	1.38	.88	.50	.50	2.68
F.N.-2	2.50	6.000	1.188	1.88	9.00	1.88	5.875	5.64	3.56	1.68	1.500	3.9359/3.9345	.38	.19	-	5.88	4.13	2.00	2.00	9.13
F.N.-3	3.00	6.375	1.188	2.25	9.38	1.88	6.375	6.60	3.57	1.39	1.500	4.7481/4.7465	.38	.19	-	6.75	4.63	2.50	2.00	9.50
F.N.-4	3.50	7.000	1.563	2.63	11.50	2.00	8.250	7.50	4.44	2.00	2.250	5.4981/5.4965	.50	.19	3.75	7.75	6.38	2.75	2.25	11.63
F.N.-5	4.00	7.500	1.563	3.00	12.00	2.50	9.125	8.75	4.50	1.63	2.250	6.2481/6.2465	.50	.25	4.25	9.00	6.75	3.25	2.75	12.13
F.N.-6	5.00	9.000	1.813	3.75	15.50	3.00	11.000	11.00	5.88	2.25	3.250	7.7476/7.7458	.50	.25	4.75	11.25	8.13	4.00	3.25	15.63
F.N.-7	6.00	13.750	2.563	4.13	21.30	4.00	12.750	13.32	8.585	3.99	3.775	8.7475/8.7457	.75	.38	5.75	13.62	8.88	4.75	4.25	21.43
F.N.-8	7.00	15.500	2.813	4.375	23.75	4.25	14.500	15.36	9.6875	4.20	4.125	10.4971/10.4950	.75	.38	6.00	15.61	10.38	4.625	4.50	23.88
F.N.-9	8.00	17.125	2.813	5.0	25.50	4.25	15.750	17.12	10.25	4.19	4.188	11.9970/11.9949	.75	.38	6.00	17.37	11.63	5.25	4.50	25.63
F.N.-23	6.5	14.75	2.813	4.062	24.5	4.25	13.615	14.25	10.219	5.13	4.88	9.7474/9.7456	.75	.38	6.00	14.62	9.5	4.312	4.375	24.63

D 1, D 4, D 5, D 6, D 7, D 8, D 9, D 10, D 11, D 12, D 13

C 2, C 3, C 4, C 5, B 1, C 6, B 2, C 7, C 12, C 8, B 3, C 9

REVISIONS			
SYM	DESCRIPTION	DATE	APPROVAL
B1	COLUMN 'M' VALUES UPDATED: WAS 6.14, IS 6.60;		
	WAS 7.50, IS 7.80; WAS 8.50 IS 9.20; WAS 15.50,		
	IS 16.00; WAS 17.12, IS 17.60		
B2	COLUMN 'SS' VALUES UPDATED: WAS 1.62, IS 1.39;		
	WAS 2.00, IS 1.85; WAS 1.75, IS 1.40; WAS 4.13,		
	IS 3.88; WAS 4.19, IS 3.95.		
B3	COLUMN 'A' VALUES UPDATED: WAS 6.38, IS 6.75;		
	WAS 7.75, IS 8.00; WAS 8.75, IS 9.50; WAS 15.75,		
	IS 16.25; WAS 17.38, IS 17.75.		
C2	COLUMN 'BD' VALUE UPDATED: WAS 2.750, IS 2.813.		
C3	COLUMN 'CB' VALUE UPDATED: WAS 4.50, IS 4.13.		
C4	COLUMN 'F' VALUES UPDATED: WAS 2.00, IS 2.50;		
	WAS 2.00, IS 3.00.		
C5	COLUMN 'FL' VALUES UPDATED: WAS 8.625, IS		
	9.125; WAS 10.000, IS 11.000.		
C6	COLUMN 'M' VALUES UPDATED: WAS 7.80, IS 7.50;		
	WAS 9.20, IS 8.75; WAS 16.00, IS 15.36; WAS		
	17.60, IS 17.12.		
C7	COLUMN 'SS' VALUES UPDATED: WAS 1.85, IS 2.00;		
	WAS 1.40, IS 1.63; WAS 3.88, IS 4.20; WAS 3.95,		
	IS 4.19.		
C8	COLUMN 'W' VALUES UPDATED: WAS 3.75, IS 4.25;		
	WAS 4.38, IS 5.38.		
C9	COLUMN 'A' VALUES UPDATED: WAS 8.00, IS 7.75;		
	WAS 9.50, IS 9.00; WAS 16.25, IS 15.61; WAS		
	17.75, IS 17.37.		
C10	ADDED WELD BLENDING NOTE.		
C12	COLUMN 'HD' VALUES UPDATED: WAS TORRINGTON, IS RBC		
D1	ADDED FIND NO.23 DIMENSIONS		
D4	F.N. 5, COLUMN 'K' VALUES UPDATED: WAS 2.25,		
	IS 2.75		
D5	F.N. 6, COLUMN 'K' VALUES UPDATED: WAS 2.25,		
	IS 3.25.		
D6	F.N. 6, COLUMN 'W' VALUES UPDATED: WAS 5.38,		
	IS 4.75.		
D7	F.N. 7, COLUMN 'RR' VALUES UPDATED: WAS 8.40,		
	IS 8.585.		
D8	F.N. 8, COLUMN 'C' VALUES UPDATED: WAS 3.75,		
	IS 4.625.		
D9	F.N. 8, COLUMN 'CB' VALUES UPDATED: WAS 3.15,		
	IS 4.375.		
D10	F.N. 8, COLUMN 'RR' VALUES UPDATED: WAS 10.30,		
	IS 9.6875.		
D11	F.N. 9, COLUMN 'C' VALUES UPDATED: WAS 4.75,		
	IS 5.25.		
D12	F.N. 9, COLUMN 'CB' VALUES UPDATED: WAS 4.41,		
	IS 5.0.		
D13	F.N. 9, COLUMN 'RR' VALUES UPDATED: WAS 10.55,		
	IS 10.25.		

- PRELIMINARY -
THIS DRAWING HAS NOT COMPLETED THE REVIEW PROCESS AND IS SUBJECT TO CHANGE.
07-31-13
DATE

STANDARD SWIVEL EYE BRACKETS

SPECIAL TEST EQUIPMENT DESIGN BRANCH - ET50
GEORGE C. MARSHALL SPACE FLIGHT CENTER
NATIONAL AERONAUTICS AND SPACE ADMINISTRATION
HUNTSVILLE, ALABAMA

DATE	BRANCH	REVISION
03-30-00	ED38	D
DETAILER: RWS	SCALE: NOTED	

90M11268

SIZE E SHEET 2 OF 2