2 Axis ILS Machined Parts

MED05323, Clevis, A286 SS, 23 lbs ea, 46 lbs total
MED05324, Tie Rod, A286 SS, 8 lbs ea, 16 lbs total
MED05325, Vespel Bearing, .1 lbs ea, .2 lbs total
MED05326, Cap Plate, A286 SS, 3 lbs ea, 6 lbs total
MED05327, Clamp, A286 SS, 4 lbs ea, 8 lbs total
MED05329, Support Bracket, A286 SS, 19 lbs ea, 38 lbs total
MED05330, Angled Offset YAW, A286 SS, 445 lbs
MED05331, Angled Offset PITCH, A286 SS, 225 lbs
MED05332, Washer, A286 SS, 8 lbs ea, 16 lbs total

Total weight 800 lbs

REVISIONS				
REV	ZONE	DESCRIPTION	APPROVAL	REL DATE
-				

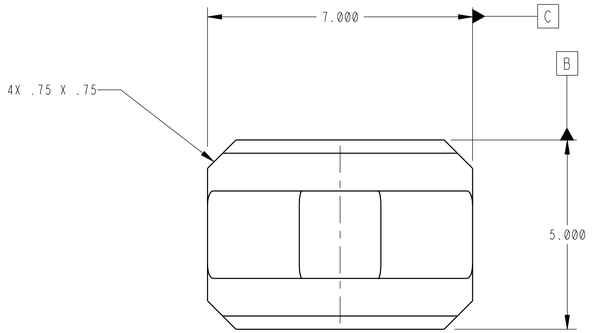

NOTES: (UNLESS OTHERWISE SPECIFIED)

1. DIMENSIONING AND TOLERANCING PER ASME Y14.5M-1994.
   - UNLESS SEPARATE TOLERANCES ARE SHOWN, PERFECT ORIENTATION AT MMC FOR RELATED FEATURES IS REQUIRED.
   - GENERAL ANGULAR TOLERANCE DOES NOT APPLY TO IMPLIED 90 DEGREE ANGLES.
2. MATERIAL: A286 CRES (UNS 566286) PER SAE AMS 5737.
3. 63 ALL MACHINED SURFACES.
4. REMOVE ALL BURRS AND SHARP EDGES.
5. IDENTIFY PART WITH PART NUMBER PER SAE AS478-15B. IN APPROX, LOCATION SHOWN. ORIENTATION OPTIONAL.
6. PASSIVATE PER SAE AMS 2700, TYPE 2.

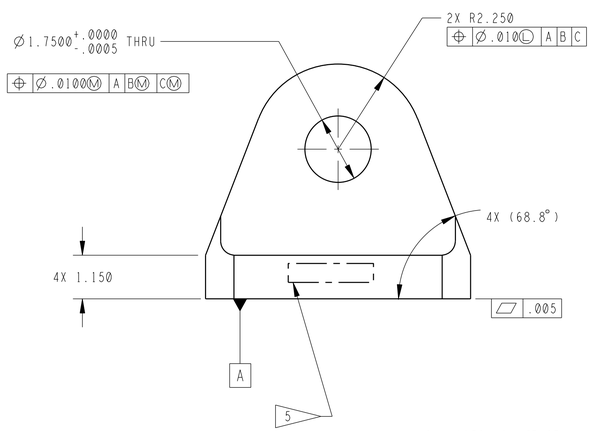

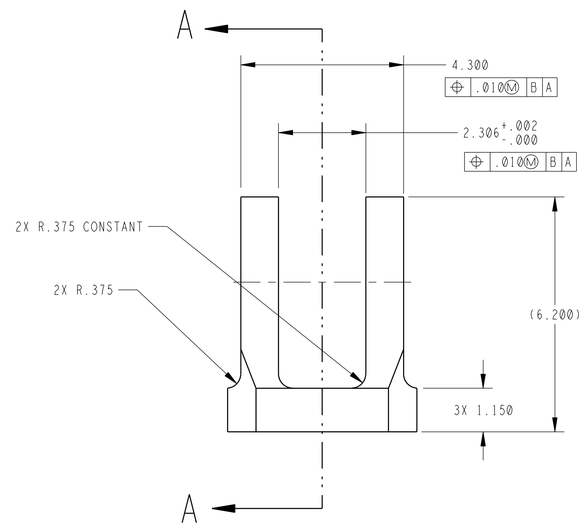

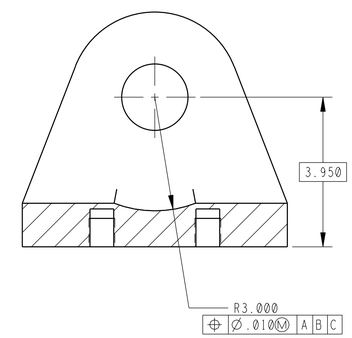

SECTION A - A

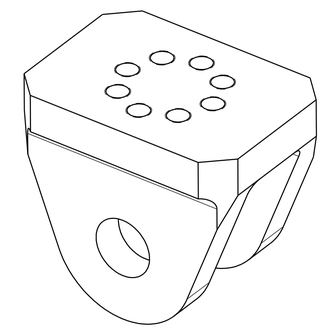

ISOMETRIC VIEW

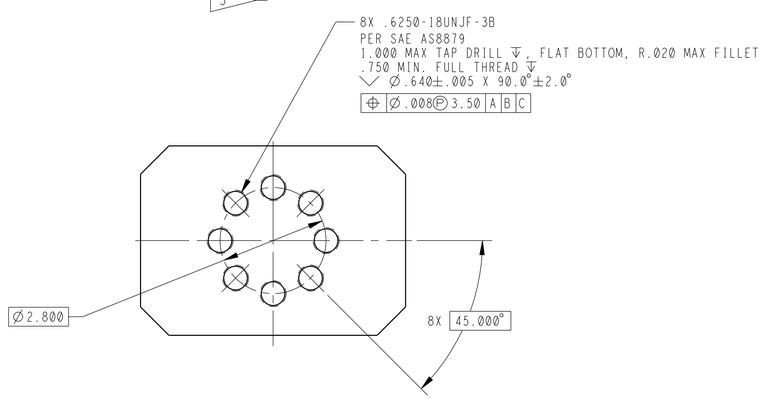

MED05323-1 SHOWN

MED05337	2 AXIS ILS
NEXT ASSY	USED ON
APPLICATION (VERIFY IN RELEASE RECORDS)	
DRAWING STATE	Workgroup Approved
DRAWING VERSION	-.1
DRAWING NUMBER	MED05323
DRAWING INFORMATION	

UNLESS OTHERWISE SPECIFIED DIMENSIONS ARE IN INCHES

TOLERANCES

DECIMALS	ANGLES
.XX±.03 .XXX±.010	±.5°

MATERIAL	2
HEAT TREATMENT	
FINISH	6
MODEL STATE	Workgroup Approved
MODEL VERSION	-.1
MODEL NUMBER	MED05323
MODEL INFORMATION	

ORIGINAL DRAWING APPROVALS	
DESIGN ORG.	ER34
DRAWN BY	D. RICE
ENGINEER	N. MYERS
CHECKER	
MATERIALS	
STRESS	W. NEWMAN
S & MA	
PRODUC-MANUF	
PRODUC-CONTR	
NEXT ASSEMBLY	R. COWAN
DESN BRANCH CHF	D. WHITTEN
RELEASE DATE	2013-07-24

GEORGE C. MARSHALL SPACE FLIGHT CENTER
NATIONAL AERONAUTICS AND SPACE ADMINISTRATION
HUNTSVILLE, ALABAMA

CLEVIS, ACTUATOR TO LEAF SPRING

SIZE	CODE	DRAWING NUMBER	REV
D	339B2	MED05323	-

SCALE 1/2 MASS (UNIT WEIGHT) 23.099 SHEET 1 OF 1

MSFC_DWG_D_FORMAT_REV(A) (AUGUST, 2009)

REVISIONS				
REV	ZONE	DESCRIPTION	APPROVAL	REL DATE
-				

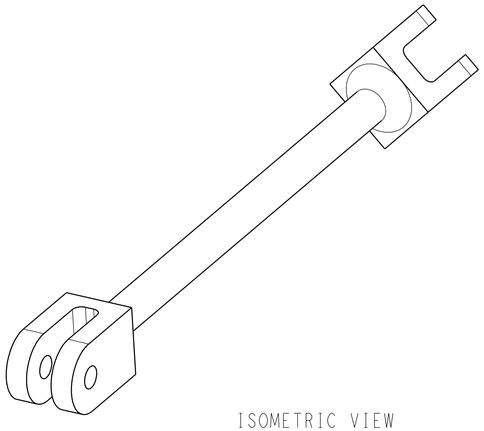

ISOMETRIC VIEW

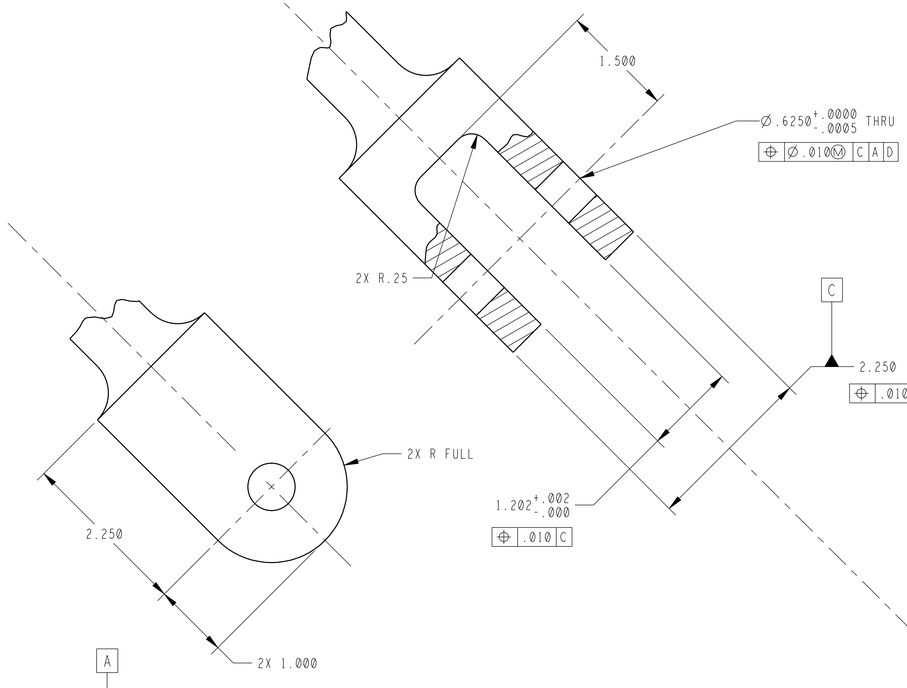

NOTES: (UNLESS OTHERWISE SPECIFIED)

1. DIMENSIONING AND TOLERANCING PER ASME Y14.5M-1994.
   - UNLESS SEPARATE TOLERANCES ARE SHOWN, PERFECT ORIENTATION AT MMC FOR RELATED FEATURES IS REQUIRED.
   - GENERAL ANGULAR TOLERANCE DOES NOT APPLY TO IMPLIED 90 DEGREE ANGLES.
2. MATERIAL: A286 CRES (UNS S66286) PER SAE AMS 5731 OR AMS 5737.
3. 63 ALL MACHINED SURFACES.
4. REMOVE ALL BURRS AND SHARP EDGES.
5. PASSIVATE PER SAE AMS 2700, TYPE 2.
6. IDENTIFY PART WITH PART NUMBER PER SAE AS478-15B IN APPROX. LOCATION SHOWN. ORIENTATION OPTIONAL.

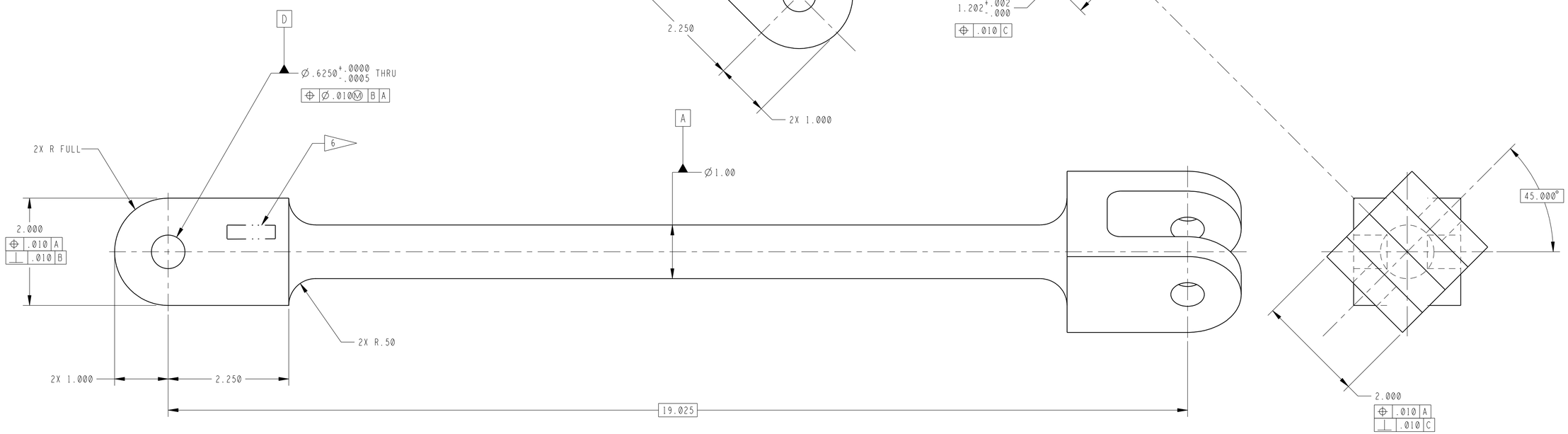

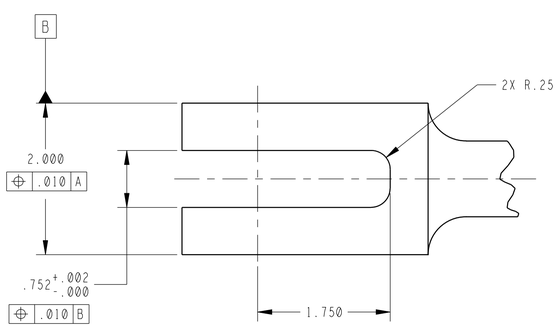

MED05324-1 SHOWN

MED05337	2 AXIS ILS		
NEXT ASSY	USED ON		
APPLICATION (VERIFY IN RELEASE RECORDS)			
DRAWING STATE	Workgroup Approved	MODEL STATE	Workgroup Approved
DRAWING VERSION	-.1	MODEL VERSION	-.1
DRAWING NUMBER	MED05324	MODEL NUMBER	MED05324
DRAWING INFORMATION		MODEL INFORMATION	

UNLESS OTHERWISE SPECIFIED DIMENSIONS ARE IN INCHES

TOLERANCES

DECIMALS	ANGLES
.XX± .03 .XXX± .010	±.5°

MATERIAL 2

HEAT TREATMENT

FINISH 5

ORIGINAL DRAWING APPROVALS	
DESIGN ORG.	ER34
DRAWN BY	D. RICE
ENGINEER	N. MYERS
CHECKER	
MATERIALS	
STRESS	W. NEWMAN
S & MA	
PRODUC-MANUF	
PRODUC-CONTR	
NEXT ASSEMBLY	R. COWAN
DESN BRANCH CHF	D. WHITTEN
RELEASE DATE	2013-07-24

GEORGE C. MARSHALL SPACE FLIGHT CENTER

NATIONAL AERONAUTICS AND SPACE ADMINISTRATION
HUNTSVILLE, ALABAMA

TIE ROD

SIZE	CODE	DRAWING NUMBER	REV
D	339B2	MED05324	-

SCALE 1/1 MASS (UNIT WEIGHT) 7.869 SHEET 1 OF 1

MSFC_DWG_D_FORMAT_REV(A) (AUGUST, 2009)

REVISIONS				
REV	ZONE	DESCRIPTION	APPROVAL	REL DATE
-				

NOTES: (UNLESS OTHERWISE SPECIFIED)

1. DIMENSIONING AND TOLERANCING PER ASME Y14.5M-1994.
   - UNLESS SEPARATE TOLERANCES ARE SHOWN, PERFECT ORIENTATION AT MMC FOR RELATED FEATURES IS REQUIRED.
   - GENERAL ANGULAR TOLERANCE DOES NOT APPLY TO IMPLIED 90 DEGREE ANGLES.

2. MATERIAL: VESPEL SP-1.

   SOURCE: DUPONT EI DE NEMOURS AND CO, INC.
   POLYMER PRODUCTS
   PENCADER PLANT VESPEL MARKETING
   350 BELLEVUE RD. P.O. BOX 6100
   NEWARK, DE. 19714-6100
   PHONE NO: 1-800-222-8377
   CODE IDENT. NO. IN473

3. 63 ALL MACHINED SURFACES.
4. REMOVE ALL BURRS AND SHARP EDGES.
5. IDENTIFY PART WITH PART NUMBER PER SAE AS478-35D. (BAG & TAG)

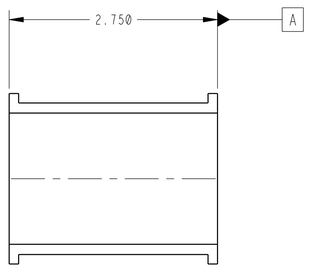

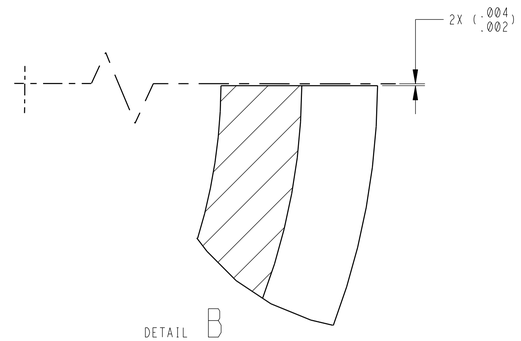

DETAIL B
SCALE 8/1

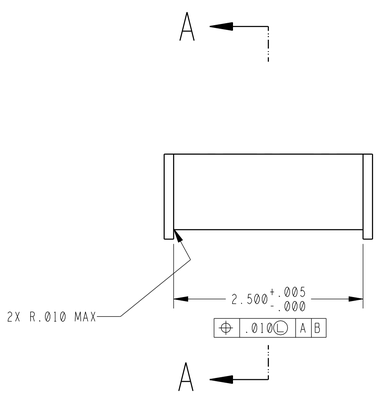

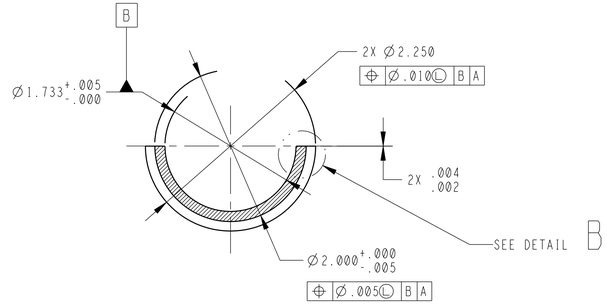

SECTION A - A

MED05325-1 SHOWN

MED05337	2 AXIS ILS	NEXT ASSY	USED ON
APPLICATION (VERIFY IN RELEASE RECORDS)			
DRAWING STATE	Workgroup Approved		
DRAWING VERSION	-.1		
DRAWING NUMBER	MED05325		
DRAWING INFORMATION			

UNLESS OTHERWISE SPECIFIED DIMENSIONS ARE IN INCHES
TOLERANCES
DECIMALS .XX±.03 .XXX±.010
ANGLES ±.5°
MATERIAL 2
HEAT TREATMENT
FINISH

MODEL STATE	Workgroup Approved
MODEL VERSION	-.1
MODEL NUMBER	MED05325
MODEL INFORMATION	

ORIGINAL DRAWING APPROVALS	
DESIGN ORG.	ER34
DRAWN BY	D.RICE
ENGINEER	N.MYERS
CHECKER	
MATERIALS	
STRESS	W. NEWMAN
S & MA	
PRODUC-MANUF	
PRODUC-CONTR	
NEXT ASSEMBLY	R. COWAN
DESN BRANCH CHF	D. WHITTEN
RELEASE DATE	2013-07-24

GEORGE C. MARSHALL SPACE FLIGHT CENTER
NATIONAL AERONAUTICS AND SPACE ADMINISTRATION
HUNTSVILLE, ALABAMA

VESPEL BEARING

SIZE	CODE	DRAWING NUMBER	REV
D	339B2	MED05325	-

SCALE 1/1 MASS (UNIT WEIGHT) .057 SHEET 1 OF 1

MSFC_DWG_D_FORMAT_REV(A) (AUGUST, 2009)

REVISIONS				
REV	ZONE	DESCRIPTION	APPROVAL	REL DATE
-				

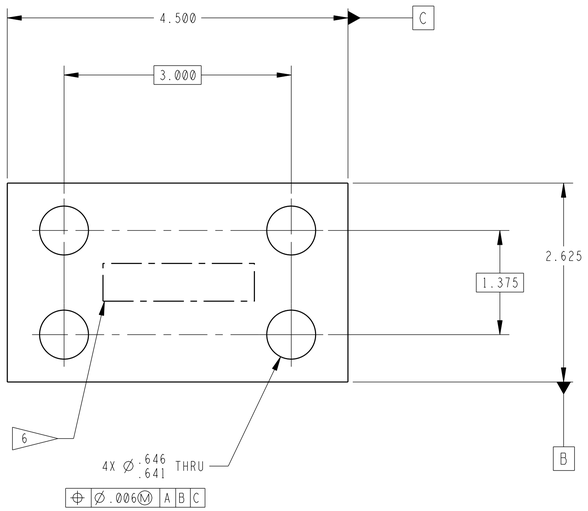

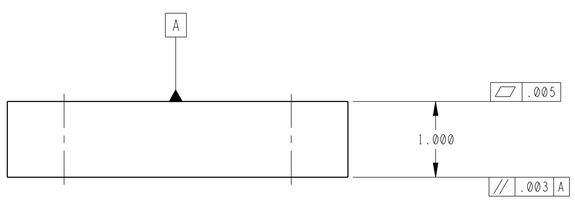

NOTES: (UNLESS OTHERWISE SPECIFIED)

1. DIMENSIONING AND TOLERANCING PER ASME Y14.5M-1994.
   - UNLESS SEPARATE TOLERANCES ARE SHOWN, PERFECT ORIENTATION AT MMC FOR RELATED FEATURES IS REQUIRED.
   - GENERAL ANGULAR TOLERANCE DOES NOT APPLY TO IMPLIED 90 DEGREE ANGLES.
2. MATERIAL: A286 CRES (UNS S66286) PER SAE AMS 5737.
3. 125 ALL MACHINED SURFACES.
4. REMOVE ALL BURRS AND SHARP EDGES.
5. PASSIVATE PER SAE AMS 2700, TYPE 2.
6. IDENTIFY PART WITH PART NUMBER PER SAE AS478-15B IN APPROX. LOCATION SHOWN. ORIENTATION OPTIONAL.

MED05326-1 SHOWN

MED05337	2 AXIS ILS
NEXT ASSY	USED ON
APPLICATION (VERIFY IN RELEASE RECORDS)	
DRAWING STATE	Workgroup Approved
DRAWING VERSION	-.1
DRAWING NUMBER	MED05326
DRAWING INFORMATION	

UNLESS OTHERWISE SPECIFIED DIMENSIONS ARE IN INCHES

TOLERANCES	
DECIMALS	ANGLES
.XX± .03 .XXX± .010	±.5°
MATERIAL	2
HEAT TREATMENT	
FINISH	5
MODEL STATE	Workgroup Approved
MODEL VERSION	-.1
MODEL NUMBER	MED05326
MODEL INFORMATION	

ORIGINAL DRAWING APPROVALS	
DESIGN ORG.	ER34
DRAWN BY	D. RICE
ENGINEER	N. MYERS
CHECKER	
MATERIALS	
STRESS	W. NEWMAN
S & MA	
PRODUC-MANUF	
PRODUC-CONTR	
NEXT ASSEMBLY	R. COWAN
DESN BRANCH CHF	D. WHITTEN
RELEASE DATE	2013-07-24

GEORGE C. MARSHALL SPACE FLIGHT CENTER
NATIONAL AERONAUTICS AND SPACE ADMINISTRATION
HUNTSVILLE, ALABAMA

CAP PLATE, TORSION BAR, SQUARE END

SIZE	CODE	DRAWING NUMBER	REV
D	339B2	MED05326	-

SCALE 1/1 MASS (UNIT WEIGHT) 2.982 SHEET 1 OF 1

MSFC_DWG_D_FORMAT_REV(A) (AUGUST, 2009)

REVISIONS				
REV	ZONE	DESCRIPTION	APPROVAL	REL DATE
-				

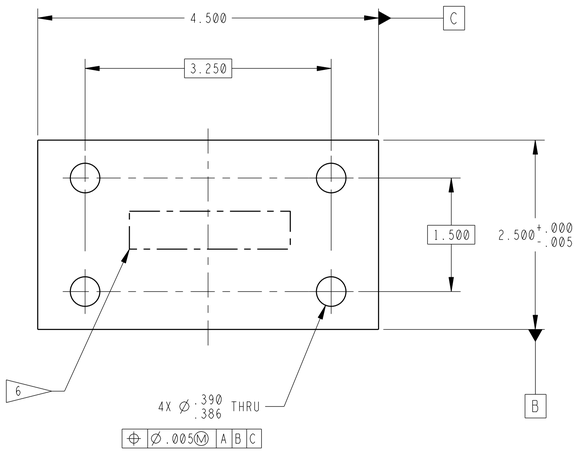

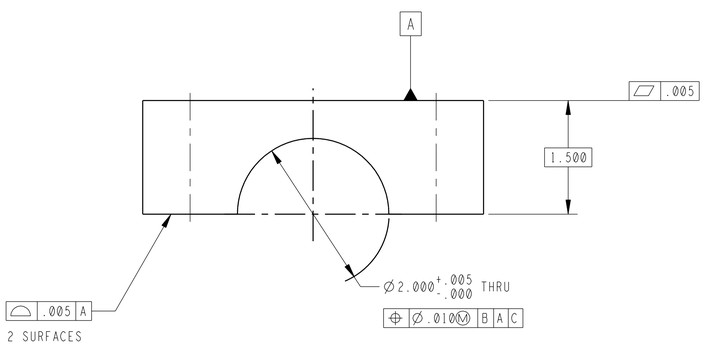

NOTES: (UNLESS OTHERWISE SPECIFIED)

1. DIMENSIONING AND TOLERANCING PER ASME Y14.5M-1994.
   - UNLESS SEPARATE TOLERANCES ARE SHOWN, PERFECT ORIENTATION AT MMC FOR RELATED FEATURES IS REQUIRED.
   - GENERAL ANGULAR TOLERANCE DOES NOT APPLY TO IMPLIED 90 DEGREE ANGLES.
2. MATERIAL: A286 CRES (UNS S66286) PER SAE AMS 5737.
3. 63 ALL MACHINED SURFACES.
4. REMOVE ALL BURRS AND SHARP EDGES.
5. PASSIVATE PER SAE AMS 2700, TYPE 2.
6. IDENTIFY PART WITH PART NUMBER PER SAE AS478-15B IN APPROX. LOCATION SHOWN. ORIENTATION OPTIONAL.

MED05327-1 SHOWN

MED05337	2 AXIS ILS
NEXT ASSY	USED ON
APPLICATION (VERIFY IN RELEASE RECORDS)	
DRAWING STATE	Workgroup Approved
DRAWING VERSION	-.1
DRAWING NUMBER	MED05327
DRAWING INFORMATION	

UNLESS OTHERWISE SPECIFIED DIMENSIONS ARE IN INCHES

TOLERANCES	
DECIMALS	ANGLES
.XX± .03	±.5°
.XXX± .010	

MATERIAL	2
HEAT TREATMENT	
FINISH	5
MODEL STATE	Workgroup Approved
MODEL VERSION	-.1
MODEL NUMBER	MED05327
MODEL INFORMATION	

ORIGINAL DRAWING APPROVALS	
DESIGN ORG.	ER34
DRAWN BY	D. RICE
ENGINEER	N. MYERS
CHECKER	
MATERIALS	
STRESS	W. NEWMAN
S & MA	
PRODUC-MANUF	
PRODUC-CONTR	
NEXT ASSEMBLY	R. COWAN
DESN BRANCH CHF	D. WHITTEN
RELEASE DATE	2013-07-24

GEORGE C. MARSHALL SPACE FLIGHT CENTER
NATIONAL AERONAUTICS AND SPACE ADMINISTRATION
HUNTSVILLE, ALABAMA

CLAMP, TORSION BAR, ROUND END

SIZE	CODE	DRAWING NUMBER	REV
D	339B2	MED05327	-

SCALE 1/1 MASS (UNIT WEIGHT) 3.474 SHEET 1 OF 1

MSFC_DWG_D_FORMAT_REV(A) (AUGUST, 2009)

REVISIONS				
REV	ZONE	DESCRIPTION	APPROVAL	REL DATE
-				

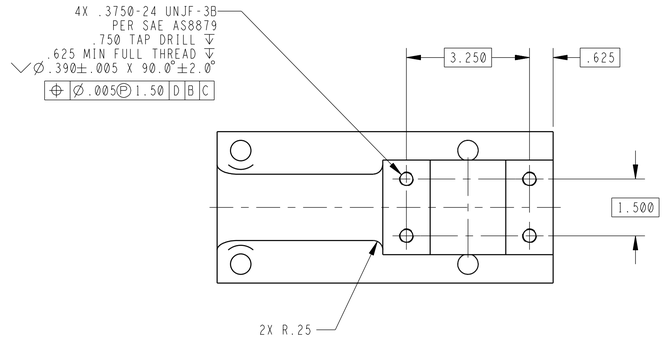

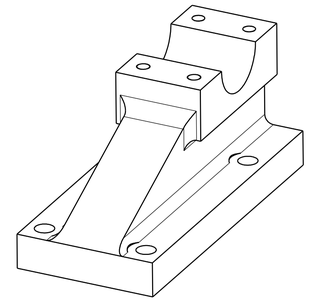

ISOMETRIC VIEW

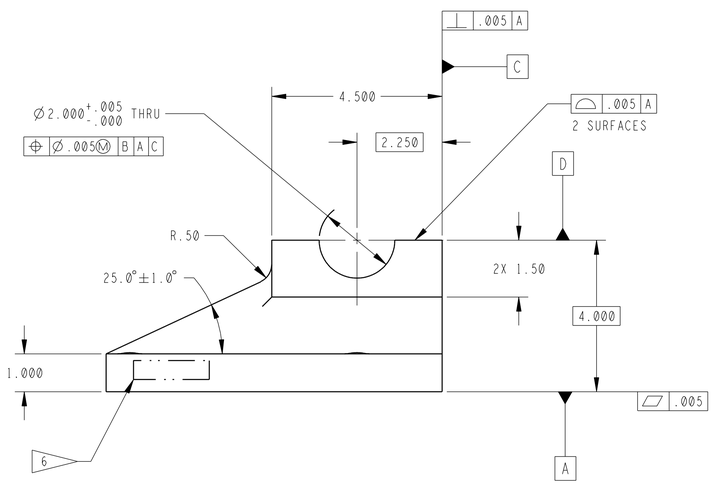

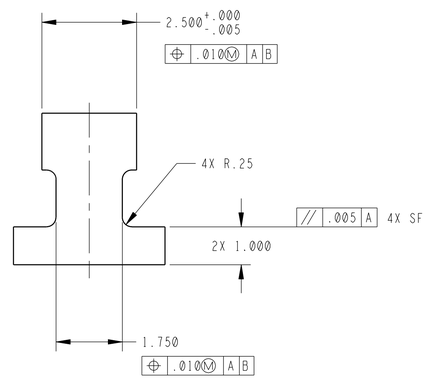

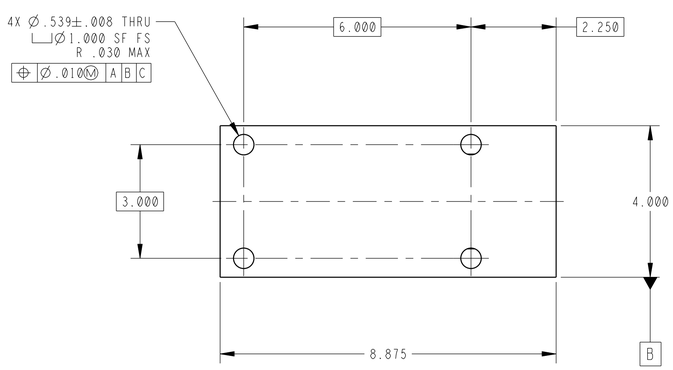

NOTES: (UNLESS OTHERWISE SPECIFIED)

1. DIMENSIONING AND TOLERANCING PER ASME Y14.5M-1994.
   - UNLESS SEPARATE TOLERANCES ARE SHOWN, PERFECT ORIENTATION AT MMC FOR RELATED FEATURES IS REQUIRED.
   - GENERAL ANGULAR TOLERANCE DOES NOT APPLY TO IMPLIED 90 DEGREE ANGLES.
2. MATERIAL: A286 CRES (UNS S66286) PER SAE AMS 5737.
3. 63 ALL MACHINED SURFACES.
4. REMOVE ALL BURRS AND SHARP EDGES.
5. PASSIVATE PER SAE AMS 2700, TYPE 2.
6. IDENTIFY PART WITH PART NUMBER PER SAE AS478-15B IN APPROX. LOCATION SHOWN. ORIENTATION OPTIONAL.

MED05329-1 SHOWN

MED05337	2 AXIS ILS		
NEXT ASSY	USED ON		
APPLICATION (VERIFY IN RELEASE RECORDS)			
DRAWING STATE	Workgroup Approved	MODEL STATE	Workgroup Approved
DRAWING VERSION	-.1	MODEL VERSION	-.1
DRAWING NUMBER	MED05329	MODEL NUMBER	MED05329
DRAWING INFORMATION		MODEL INFORMATION	

UNLESS OTHERWISE SPECIFIED DIMENSIONS ARE IN INCHES
TOLERANCES
DECIMALS .XX±.03 .XXX±.010
ANGLES ±.5°
MATERIAL 2
HEAT TREATMENT
FINISH 5

ORIGINAL DRAWING APPROVALS	
DESIGN ORG.	ER34
DRAWN BY	D. RICE
ENGINEER	N. MYERS
CHECKER	
MATERIALS	
STRESS	W. NEWMAN
S & MA	
PRODUC-MANUF	
PRODUC-CONTR	
NEXT ASSEMBLY	R. COWAN
DESN BRANCH CHF	D. WHITTEN
RELEASE DATE	2013-07-24

GEORGE C. MARSHALL SPACE FLIGHT CENTER
NATIONAL AERONAUTICS AND SPACE ADMINISTRATION
HUNTSVILLE, ALABAMA

SUPPORT BRACKET, TORSION BAR, ROUND END

SIZE	CODE	DRAWING NUMBER	REV
D	339B2	MED05329	-

SCALE 1/2 MASS (UNIT WEIGHT) 18.784 SHEET 1 OF 1

MSFC.DWG.D.FORMAT.REV(A) (AUGUST, 2009)

REVISIONS				
REV	ZONE	DESCRIPTION	APPROVAL	REL DATE
-				

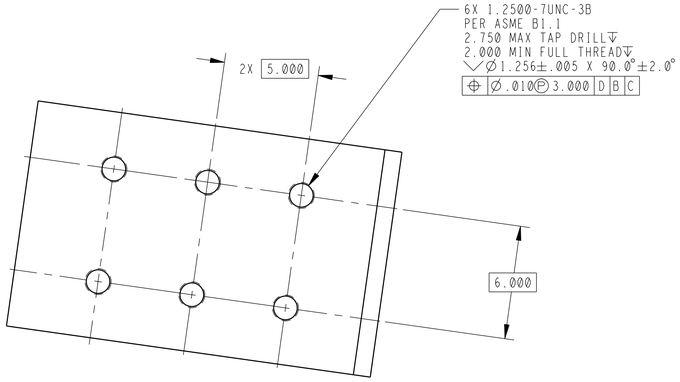

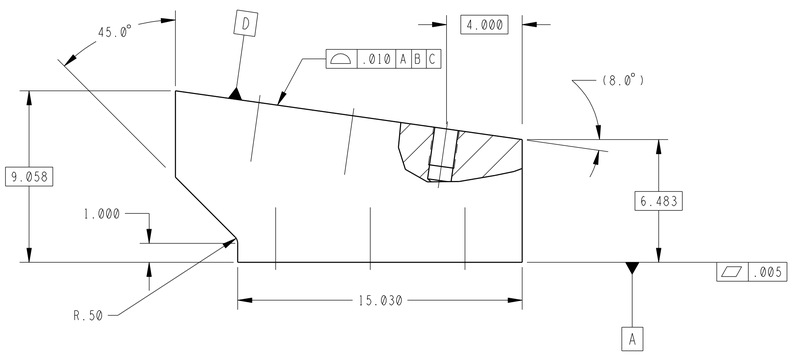

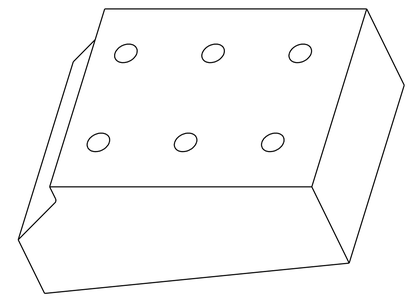

ISOMETIC VIEW

NOTES: (UNLESS OTHERWISE SPECIFIED)

1. DIMENSIONING AND TOLERANCING PER ASME Y14.5M-1994.
   - UNLESS SEPARATE TOLERANCES ARE SHOWN, PERFECT ORIENTATION AT MMC FOR RELATED FEATURES IS REQUIRED.
   - GENERAL ANGULAR TOLERANCE DOES NOT APPLY TO IMPLIED 90 DEGREE ANGLES.
2. MATERIAL: A286 CRES (UNS 566289) PER SAE AMS 5737
3. 63 ✓ ALL MACHINED SURFACES.
4. REMOVE ALL BURRS AND SHARP EDGES.
5. PASSIVATE PER SAE AMS 2700, TYPE 2.
6. IDENTIFY PART WITH PART NUMBER PER SAE AS478-15B IN APPROX. LOCATIONS SHOWN. ORIENTATION OPTIONAL

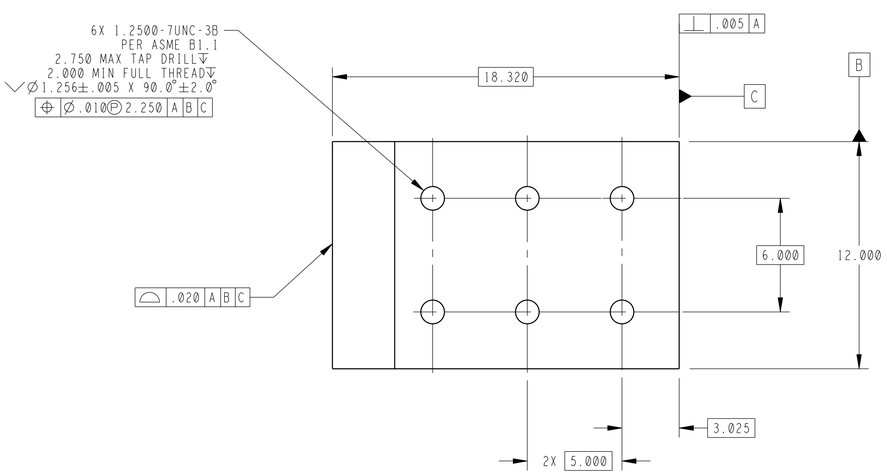

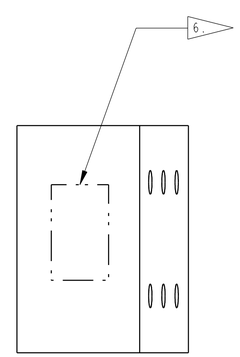

MED05330-1 SHOWN

MED05337	2 AXIS ILS		
NEXT ASSY	USED ON		
APPLICATION (VERIFY IN RELEASE RECORDS)			
DRAWING STATE	Workgroup Approved	MODEL STATE	Workgroup Approved
DRAWING VERSION	-.1	MODEL VERSION	-.1
DRAWING NUMBER	MED05330	MODEL NUMBER	MED05330
DRAWING INFORMATION		MODEL INFORMATION	

UNLESS OTHERWISE SPECIFIED DIMENSIONS ARE IN INCHES

TOLERANCES

DECIMALS	ANGLES
.XX± .03	±.5°
.XXX± .010	

MATERIAL 2.

HEAT TREATMENT

FINISH 5.

ORIGINAL DRAWING APPROVALS	
DESIGN ORG.	ER34
DRAWN BY	D. RICE
ENGINEER	N. MYERS
CHECKER	
MATERIALS	
STRESS	W. NEWMAN
S & MA	
PRODUC-MANUF	
PRODUC-CONTR	
NEXT ASSEMBLY	R. COWAN
DESN BRANCH CHF	D. WHITTEN
RELEASE DATE	2013-07-24

GEORGE C. MARSHALL SPACE FLIGHT CENTER
NATIONAL AERONAUTICS AND SPACE ADMINISTRATION
HUNTSVILLE, ALABAMA

ANGLED OFFSET YAW

SIZE	CODE	DRAWING NUMBER	REV
D	339B2	MED05330	-

SCALE 1/4 MASS (UNIT WEIGHT) 445.059 SHEET 1 OF 1

MSFC_DWG_D_FORMAT_REV(A) (AUGUST, 2009)

REVISIONS				
REV	ZONE	DESCRIPTION	APPROVAL	REL DATE
-				

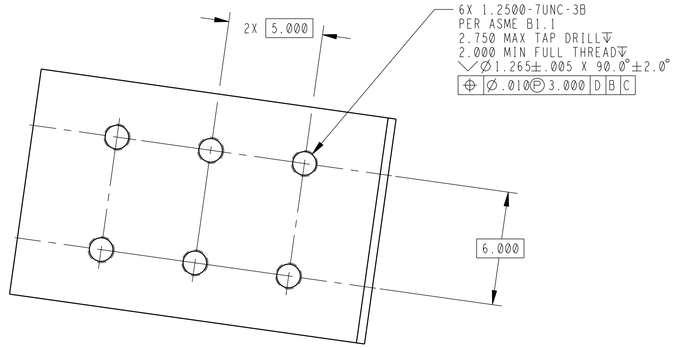

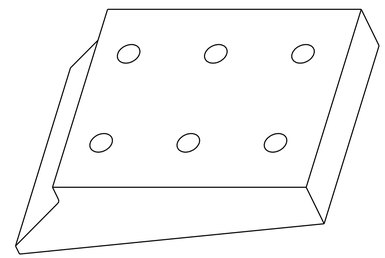

ISOMETRIC VIEW

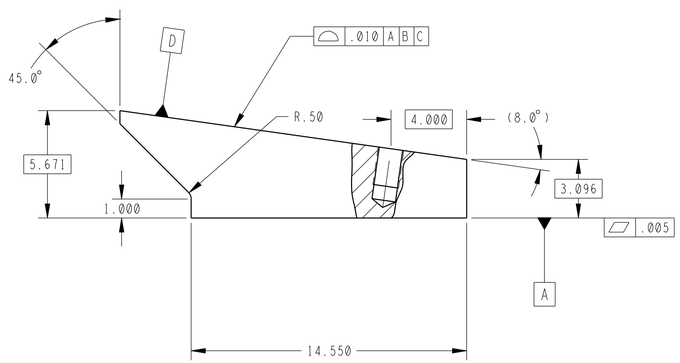

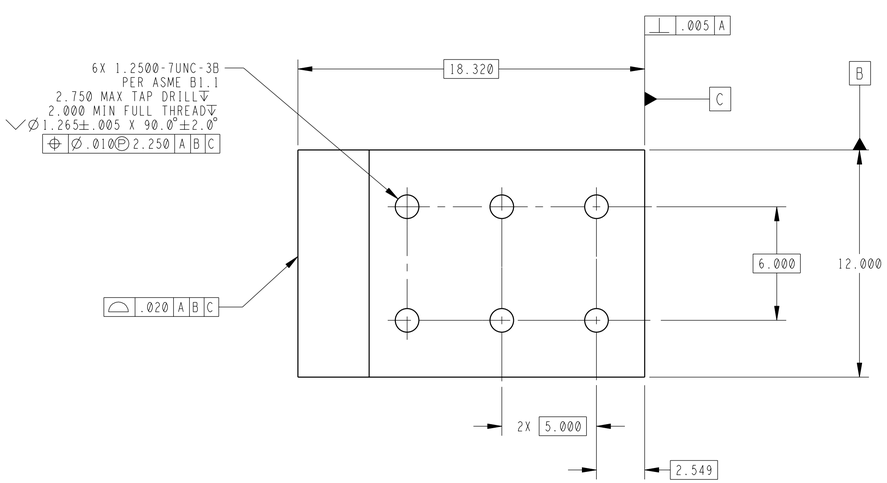

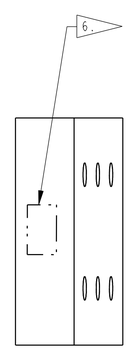

NOTES: (UNLESS OTHERWISE SPECIFIED)

1. DIMENSIONING AND TOLERANCING PER ASME Y14.5M-1994.
   - UNLESS SEPARATE TOLERANCES ARE SHOWN, PERFECT ORIENTATION AT MMC FOR RELATED FEATURES IS REQUIRED.
   - GENERAL ANGULAR TOLERANCE DOES NOT APPLY TO IMPLIED 90 DEGREE ANGLES.
2. MATERIAL: A286 CRES (UNS 566286) PER SAE AMS 5737
3. 63 ALL MACHINED SURFACES.
4. REMOVE ALL BURRS AND SHARP EDGES.
5. PASSIVATE PER SAE AMS 2700, TYPE 2.
6. IDENTIFY PART WITH PART NUMBER PER SAE AS478-15B IN APPROX. LOCATION SHOWN. ORIENTATION OPTIONAL

MED05331-1 SHOWN

MED05337	2 AXIS ILS
NEXT ASSY	USED ON
APPLICATION (VERIFY IN RELEASE RECORDS)	
DRAWING STATE	Workgroup Approved
DRAWING VERSION	-.1
DRAWING NUMBER	MED05331
DRAWING INFORMATION	

UNLESS OTHERWISE SPECIFIED DIMENSIONS ARE IN INCHES

TOLERANCES

DECIMALS	ANGLES
.XX± .03 .XXX± .010	±.5°

MATERIAL	2.
HEAT TREATMENT	
FINISH	5.
MODEL STATE	Workgroup Approved
MODEL VERSION	-.1
MODEL NUMBER	MED05331
MODEL INFORMATION	

ORIGINAL DRAWING APPROVALS	
DESIGN ORG.	ER34
DRAWN BY	D. RICE
ENGINEER	N. MYERS
CHECKER	
MATERIALS	
STRESS	W. NEWMAN
S & MA	
PRODUC-MANUF	
PRODUC-CONTR	
NEXT ASSEMBLY	R. COWAN
DESN BRANCH CHF	D. WHITTEN
RELEASE DATE	2013-07-24

GEORGE C. MARSHALL SPACE FLIGHT CENTER
NATIONAL AERONAUTICS AND SPACE ADMINISTRATION
HUNTSVILLE, ALABAMA

ANGLED OFFSET PITCH

SIZE	CODE	DRAWING NUMBER	REV
D	339B2	MED05331	-

SCALE 1/4 MASS (UNIT WEIGHT) 224.292 SHEET 1 OF 1

MSFC_DWG_D_FORMAT_REV(A) (AUGUST, 2009)

REVISIONS				
REV	ZONE	DESCRIPTION	APPROVAL	REL DATE
-				

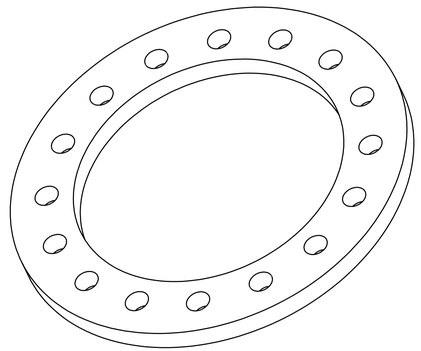

ISOMETRIC VIEW

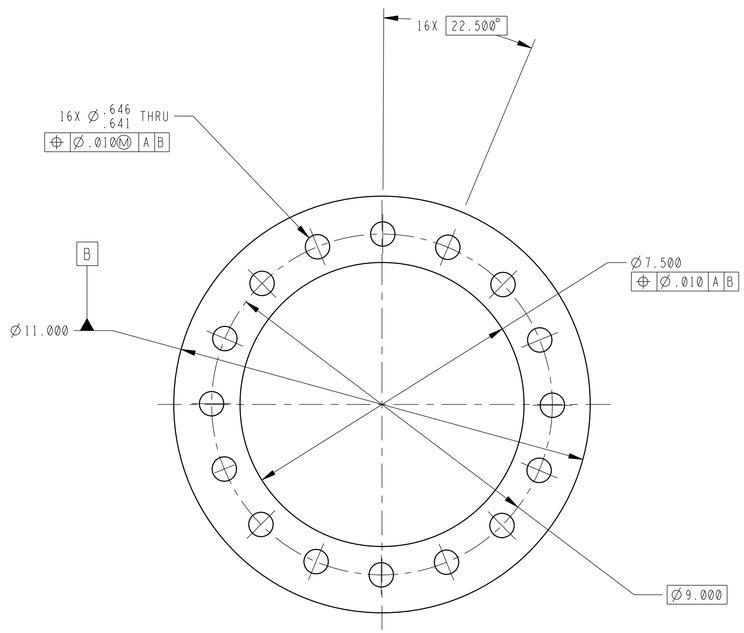

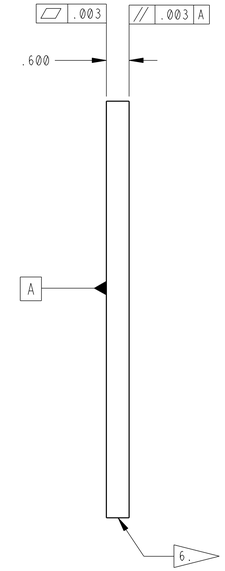

NOTES: (UNLESS OTHERWISE SPECIFIED)

1. DIMENSIONING AND TOLERANCING PER ASME Y14.5M-1994.
   - UNLESS SEPARATE TOLERANCES ARE SHOWN, PERFECT ORIENTATION AT MMC FOR RELATED FEATURES IS REQUIRED.
   - GENERAL ANGULAR TOLERANCE DOES NOT APPLY TO IMPLIED 90 DEGREE ANGLES.
2. MATERIAL: A286 CRES PER (UNS 566286) SAE AMS 5737
3. 63 ALL MACHINED SURFACES.
4. REMOVE ALL BURRS AND SHARP EDGES.
5. PASSIVATE PER SAE AMS 2700, TYPE 2.
6. IDENTIFY PART WITH PART NUMBER PER SAE AS478-15B IN APPROX. LOCATION SHOWN. ORIENTATION OPTIONAL

MED05332-1 SHOWN

MED05337	2 AXIS ILS
NEXT ASSY	USED ON
APPLICATION (VERIFY IN RELEASE RECORDS)	
DRAWING STATE	Workgroup Approved
DRAWING VERSION	-.1
DRAWING NUMBER	MED05332
DRAWING INFORMATION	

UNLESS OTHERWISE SPECIFIED DIMENSIONS ARE IN INCHES

TOLERANCES

DECIMALS	ANGLES
.XX± .03 .XXX± .010	±.5°

MATERIAL	2.
HEAT TREATMENT	
FINISH	5.
MODEL STATE	Workgroup Approved
MODEL VERSION	-.1
MODEL NUMBER	MED05332
MODEL INFORMATION	

ORIGINAL DRAWING APPROVALS	
DESIGN ORG.	ER34
DRAWN BY	D. RICE
ENGINEER	N. MYERS
CHECKER	
MATERIALS	
STRESS	W. NEWMAN
S & MA	
PRODUC-MANUF	
PRODUC-CONTR	
NEXT ASSEMBLY	R. COWAN
DESN BRANCH CHF	D. WHITTEN
RELEASE DATE	2013-07-24

GEORGE C. MARSHALL SPACE FLIGHT CENTER

NATIONAL AERONAUTICS AND SPACE ADMINISTRATION
HUNTSVILLE, ALABAMA

LOAD CELL WASHER

SIZE	CODE	DRAWING NUMBER	REV
D	339B2	MED05332	-

SCALE 1/2 MASS (UNIT WEIGHT) 7.832 SHEET 1 OF 1

MSFC_DWG_D_FORMAT_REV(A) (AUGUST, 2009)