SOLICITATION TERMS AND CONDITIONS
ALL CHECKED BOXES ARE APPLICABLE

SOLICITATION: NNM14487504Q FIRM FIXED PRICE (FFP)	CONTRACT ADMINISTRATOR: Mary Brinkley/ARCS Mary.M.Brinkley@nasa.gov

I. DELIVERY AND PERFORMANCE REQUIREMENTS.

☒ ADDITIONAL ITEM DESCRIPTION, SPECIFICATION, OR STATEMENT OF WORK: **Page 15 & 16**
☐ CONFIRMATION OF VERBAL/E-MAIL/FAXED ORDER – DO NOT DUPLICATE
☒ THIS ORDER IS A RATED ORDER UNDER DPAS (15 CFR 700). THE RATING FOR THIS ORDER IS DO-C9
☒ DELIVERY DATE: TBD
☐ PERIOD OF PERFORMANCE:
☒ NO PARTIAL PAYMENT/ DELIVERY ALLOWED. **DO NOT SUBMIT INVOICE UNTIL COMPLETION OF ORDER. ALL ITEMS TO BE SHIPPED AT THE SAME TIME ***
☐ PARTIAL DELIVERY/PAYMENT ACCEPTABLE.*

The contractor shall be paid upon acceptance of all deliverables described in the delivery schedule. Acceptance as used herein is defined as the successful completion of required tasks and deliverable for the period covered

II. INVOICING AND PAYMENT INFORMATION.

Invoices shall be submitted to:

NASA Shared Services Center (NSSC)
Financial Management Division (FMD) – Accounts Payable
Bldg 1111, C. Road
Stennis Space Center, MS 39529
Email: NSSC-AccountsPayable@nasa.gov
Fax: 866-209-5415
Fed Tax Exempt #: 63-0422638

TAX IDENTIFICATION NUMBER (TIN) MUST BE PROVIDED WITH THE INVOICE FOR PAYMENT

III. APPLICABLE COMMERCIAL ITEM SOLICITATION CLAUSES:

This order is for a commercial item subject to the terms and conditions of FAR 52.212-4, Contract Terms and Conditions – Commercial Items (Sept 2013), incorporated by reference; FAR 52.212-5, Contract Terms and Conditions Required to Implement Statutes and Executive Orders, Commercial Items (Sept 2013) attached to this order; and any additional terms and conditions checked below or included as a Center specific requirements as addenda to 52.212-4.

52.252-2 Clauses Incorporated by Reference (FEB 1998).
This contract incorporates one or more clauses by reference, with the same force and effect as if they were given in full text. Upon request, the Contracting Officer will make their full text available. Also, the full text of a clause may be accessed electronically at this/these address(es): http://procurement.nasa.gov/far/

A. EDERAL ACQUISITION REGULATION (48CFR CHAPTER 1) CLAUSES.

- ☐ 52.204-4 Printed or Copied Double-Sided on Postconsumer Fiber Content Paper. (May 2011)
- ☒ 52.204-7 System for Award Management Maintenance (Jul 2013)
- ☒ 52.204-13 System for Award Management (Jul 2013)
- ☐ 52.209-2 Prohibition on Contracting with Inverted Domestic Corporations-Representation. (May 2011)
- ☒ 52.211-6 Brand Name Or Equal (Aug 1999)
- ☒ 52.212-1 Instructions to Offerors-Commercial Items (Jul 2013)
- ☒ 52.225-25 Prohibition on Contracting with Entities Engaging in Sanctioned Activities Relating to Iran—Representation and Certification. (Dec 2012)
- ☒ 52.232-39 Unenforceability of Unauthorized Obligations (Jun 2013)
- ☒ 52.247-34 F.O.B. Destination (Nov 1991)

B. NASA FEDERAL ACQUISITION REGULATION SUPPLEMENT (48CFR CHAPTER 18) CLAUSES INCORPORATED BY REFERENCE.

- ☒ 1852.225-70 Export Licenses (Feb 2000)
- ☐ 1852.227-86 Commercial Computer Software-Licensing (Dec 1987)
- ☐ 1852.223-75 Major Breach of Safety or Security (Feb 2002)

C. NASA FEDERAL ACQUISITION REGULATION SUPPLEMENT (NFS) CLAUSES IN FULL TEXT AND APPLICABLE FEDERAL ACQUISITION REGULATION (FAR) CLAUSES IN FULL TEXT.

☒ 1852.209-73 REPRESENTATION BY OFFERORS THAT THEY ARE NOT THE ASSOCIATION OF COMMUNITY ORGANIZATIONS FOR REFORM NOW (ACORN) OR A SUBSIDIARY OF ACORN.(DEVIATION FEB 2012)

(a) In accordance with section 534 of The Consolidated and Further Continuing Appropriation Act of 2012 (Pub. L.112-55) none of the funds made available by the Act may be distributed to the Association of Community Organizations for Reform Now (ACORN) or its subsidiaries.

(b) The offeror represents, by submission of its offer, that it is not the Association of Community Organizations for Reform Now (ACORN) or a subsidiary thereof.

(End of provision)

1852.215-84 OMBUDSMAN (NOV 2011)

(a) An ombudsman has been appointed to hear and facilitate the resolution of concerns from offerors, potential offerors, and contractors during the preaward and postaward phases of this acquisition. When requested, the ombudsman will maintain strict confidentiality as to the source of the concern. The existence of the ombudsman is not to diminish the authority of the contracting officer, the Source Evaluation Board, or the selection official. Further, the ombudsman does not participate in the evaluation of proposals, the source selection process, or the adjudication of formal contract disputes. Therefore, before consulting with an ombudsman, interested parties must first address their concerns, issues, disagreements, and/or recommendations to the contracting officer for resolution.

(b) If resolution cannot be made by the contracting officer, interested parties may contact the installation ombudsman, whose name, address, telephone number, facsimile number, and e-mail address may be found at: http://prod.nais.nasa.gov/pub/pub_library/Omb.html. Concerns, issues, disagreements, and recommendations which cannot be resolved at the installation may be referred to the Agency ombudsman identified at the above URL. Please do not contact the ombudsman to request copies of the solicitation, verify offer due date, or clarify technical requirements. Such inquiries shall be directed to the Contracting Officer or as specified elsewhere in this document.

(End of Clause)

1852.216-78 FIRM FIXED PRICED (Dec 1988)

The total firm fixed price of this contract is $_____TBD_____.

(End of Clause)

1852.223-72 SAFETY AND HEALTH (SHORT FORM) (APR 2002)

a) Safety is the freedom from those conditions that can cause death, injury, occupational illness; damage to or loss of equipment or property, or damage to the environment. NASA's safety priority is to protect: (1) the public, (2) astronauts and pilots, (3) the NASA workforce (including contractor employees working on NASA contracts), and (4) high-value equipment and property.
(b) The Contractor shall take all reasonable safety and occupational health measures consistent with standard industry practice in performing this contract. The Contractor shall comply with all Federal, State, and local laws applicable to safety and occupational health and with the safety and occupational health standards, specifications, reporting requirements, and any other relevant requirements of this contract.
(c) The Contractor shall take, or cause to be taken, any other safety, and occupational health measures the Contracting Officer may reasonably direct. To the extent that the Contractor may be entitled to an equitable adjustment for those measures under the terms and conditions of this contract, the equitable adjustment shall be determined pursuant to the procedures of the Changes clause of this contract; provided, that no adjustment shall be made under this Safety and Health clause for any change for which an equitable adjustment is expressly provided under any other clause of the contract.
(d) The Contracting Officer may notify the Contractor in writing of any noncompliance with this clause and specify corrective actions to be taken. In situations where the Contracting Officer becomes aware of noncompliance that may pose a serious or imminent danger
to safety and health of the public, astronauts and pilots, the NASA workforce (including Contractor employees working on NASA contracts), or high value mission critical equipment or property, the Contracting Officer shall notify the Contractor orally, with written confirmation. The Contractor shall promptly take and report any necessary corrective action. The Government may pursue appropriate remedies in the event the Contractor fails to promptly take the necessary corrective action.
(e) The Contractor (or subcontractor or supplier) shall insert the substance of this clause, including this paragraph (e) and any applicable Schedule provisions, with appropriate changes of designations of the parties, in subcontracts of every tier that exceed the micro-purchase threshold.

(End of Clause)

1852.225-73 Information Technology Systems from Entities Owned, Directed or Subsidized by the People's Republic of China. (June 2013)

(a) Definitions –
"Acquire" means procure with appropriated funds by and for the use of NASA through purchase or lease.
"Entity owned, directed or subsidized by the People's Republic of China" means any organization incorporated under the laws of the People's Republic of China.
"Information Technology (IT) System" means the combination of hardware components, software, and other equipment to make a system whose core purpose is to accomplish a data processing need such as the automatic acquisition, storage, analysis, evaluation, manipulation, management, movement, control, display, switching, interchange, transmission or reception of data. IT systems include ground systems in support of flight hardware. IT systems do not include—

(i) Systems acquired by a contractor incidental to a contract;
(ii) Imbedded information technology that is used as an integral part of the product, but the principal function of which is not the acquisition, storage, analysis, evaluation, manipulation, management, movement, control, display, switching, interchange, transmission, or reception of data or information. For example, HVAC (heating, ventilation, and air conditioning) equipment such as thermostats or temperature control devices, and medical equipment where information technology is integral to its operation, are not information technology systems;

(iii) Services in support of IT systems, such as help desk services; or

(iv) Flight hardware, which includes aircraft, spacecraft, artificial satellites, launch vehicles, balloon systems, sounding rockets, on-board instrument and technology demonstration systems, and equipment operated on the International Space Station; as well as prototypes, and engineering or brass boards created and used to test, troubleshoot, and refine air- and spacecraft hardware, software and procedures.

(b) Section 516 of the Consolidated and Further Continuing Appropriation Act, 2013 (Pub. L.113-6), requires NASA's Office of the Chief Information Officer (OCIO) to assess the risk of cyber-espionage or sabotage of an information technology (IT) system that is produced, manufactured, or assembled by an entity owned, directed or subsidized by the People's Republic of China. By submitting an offer in response to this solicitation, the Offeror understands and agrees that the Government retains the right to reject any offer or response to this solicitation made by the Offeror, without any further recourse by, or explanation to, the Offeror, if the Government determines the Offeror or the equipment or software offered by the Offeror, in whole or in part, presents an unacceptable risk to national security.

(c) *Representation*. The Offeror represents that any information technology system offered, except those listed in paragraph (d) of this provision, is not produced, manufactured, or assembled by an entity owned, directed or subsidized by the People's Republic of China.

(d) Information technology system(s) produced, manufactured, or assembled by an entity owned, directed or subsidized by the People's Republic of China:

ITEM	VENDOR/MANUFACTURER'S COMPANY NAME AND ADDRESS
_____	_____
_____	_____
_____	_____

[*List as necessary*]

(e) The Contracting Officer will provide the list referenced in paragraph (d) to the NASA Office of the Chief Information Officer (OCIO) which will assess the risk of cyber-espionage or sabotage and make a determination if the acquisition of such system is in the national interest. Only items so approved may be provided under the contract. The Contracting Officer will advise the Offeror if any items are not approved and may provide the Offeror an opportunity to revise its proposal.

(End of Provision)

1852.225-74, Notification Prior to Acquiring Information Technology Systems from Entities Owned, Directed or Subsidized by the People's Republic of China (June 2013)

(a) Definitions –

"Acquire" means procure with appropriated funds by and for the use of NASA through purchase or lease.

"Entity owned, directed or subsidized by the People's Republic of China" means any organization incorporated under the laws of the People's Republic of China.

"Information Technology (IT) System" means the combination of hardware components, software, and other equipment to make a system whose core purpose is to accomplish a data processing need such as the automatic acquisition, storage, analysis, evaluation, manipulation, management, movement, control, display, switching, interchange, transmission or reception of data. IT systems include ground systems in support of flight hardware. IT systems do not include—

(i) Systems acquired by a contractor incidental to a contract;

(ii) Imbedded information technology that is used as an integral part of the product, but the principal function of which is not the acquisition, storage, analysis, evaluation, manipulation, management, movement, control, display, switching, interchange, transmission, or reception of data or information. For example, HVAC (heating, ventilation, and air conditioning) equipment such as thermostats or temperature control devices, and medical equipment where information technology is integral to its operation, are not information technology systems;

(iii) Services in support of IT systems, such as help desk services; or Flight hardware, which includes aircraft, spacecraft, artificial satellites, launch vehicles, balloon systems, sounding rockets, on-board instrument and technology demonstration systems, and equipment operated on the International Space Station; as well as prototypes, and engineering or brass boards created and used to test, troubleshoot, and refine air- and spacecraft hardware, software and procedures.

(b) Section 516 of the Consolidated and Further Continuing Appropriation Act, 2013 (Pub. L.113-6), requires NASA's Office of the Chief Information Officer (OCIO) to assess the risk of cyber-espionage or sabotage of an information technology (IT) system that is produced, manufactured, or assembled by an entity owned, directed or subsidized by the People's Republic of China (PRC). The Government retains the right to reject any IT system tendered for acceptance under this Contract, without any further recourse by, or explanation to, the Contractor, if the Government determines the IT system, in whole or in part, presents an unacceptable risk to national security.

(c) The Contractor shall obtain the approval of the Contracting Officer before acquiring any IT system(s) from entities owned, directed or subsidized by the People's Republic of China under this contract. Any Contractor request to use such items shall include adequate information for Government evaluation of the request, including—

(1) A brief description of the item(s); and

(2) Vendor/manufacturer's company name and address;

(d) The Contracting Officer will provide the information referenced in paragraph (c) to the NASA Office of the Chief Information Officer (OCIO) which will assess the risk of cyber-espionage or sabotage and make a determination if the acquisition of such system is in the national interest. Only items so approved shall be provided under the contract.

(End of Clause)

1852.237-73 RELEASE OF SENSITIVE INFORMATION (JUNE 2005)

(a) As used in this clause, "sensitive information" refers to information, not currently in the public domain, that the Contractor has developed at private expense, that may embody trade secrets or commercial or financial information, and that may be sensitive or privileged.

(b) In accomplishing management activities and administrative functions, NASA relies heavily on the support of various service providers. To support NASA activities and functions, these service providers, as well as their subcontractors and their individual employees, may need access to sensitive information submitted by the Contractor under this contract. By submitting this proposal or performing this contract, the Contractor agrees that NASA may release to its service providers, their subcontractors, and their individual employees, sensitive information submitted during the course of this procurement, subject to the enumerated protections mandated by the clause at 1852.237-72, Access to Sensitive Information.

(c)(1) The Contractor shall identify any sensitive information submitted in support of this proposal or in performing this contract. For purposes of identifying sensitive information, the Contractor may, in addition to any other notice or legend otherwise required, use a notice similar to the following:

Mark the title page with the following legend:

This proposal or document includes sensitive information that NASA shall not disclose outside the Agency and its service providers that support management activities and administrative functions. To gain access to this sensitive information, a service provider's contract must contain the clause at NFS 1852.237-72, Access to Sensitive Information. Consistent with this clause, the service provider shall not duplicate, use, or disclose the information in whole or in part for any purpose other than to perform the services specified in its contract. This restriction does not limit the Government's right to use this information if it is obtained from another source without restriction. The information subject to this restriction is contained in pages : N/A

Mark each page of sensitive information the Contractor wishes to restrict with the following legend:

Use or disclosure of sensitive information contained on this page is subject to the restriction on the title page of this proposal or document.

(2) The Contracting Officer shall evaluate the facts supporting any claim that particular information is "sensitive." This evaluation shall consider the time and resources necessary to protect the information in accordance with the detailed safeguards mandated by the clause at 1852.237-72, Access to Sensitive Information. However, unless the Contracting Officer decides, with the advice of Center counsel, that reasonable grounds exist to challenge the

Contractor's claim that particular information is sensitive, NASA and its service providers and their employees shall comply with all of the safeguards contained in paragraph (d) of this clause.

(d) To receive access to sensitive information needed to assist NASA in accomplishing management activities and administrative functions, the service provider must be operating under a contract that contains the clause at 1852.237-72, Access to Sensitive Information. This clause obligates the service provider to do the following:

(1) Comply with all specified procedures and obligations, including the Organizational Conflicts of Interest Avoidance Plan, which the contract has incorporated as a compliance document.

(2) Utilize any sensitive information coming into its possession only for the purpose of performing the services specified in its contract.

(3) Safeguard sensitive information coming into its possession from unauthorized use and disclosure.

(4) Allow access to sensitive information only to those employees that need it to perform services under its contract.

(5) Preclude access and disclosure of sensitive information to persons and entities outside of the service provider's organization.

(6) Train employees who may require access to sensitive information about their obligations to utilize it only to perform the services specified in its contract and to safeguard it from unauthorized use and disclosure.

(7) Obtain a written affirmation from each employee that he/she has received and will comply with training on the authorized uses and mandatory protections of sensitive information needed in performing this contract.

(8) Administer a monitoring process to ensure that employees comply with all reasonable security procedures, report any breaches to the Contracting Officer, and implement any necessary corrective actions.

(e) When the service provider will have primary responsibility for operating an information technology system for NASA that contains sensitive information, the service provider's contract shall include the clause at 1852.204-76, Security Requirements for Unclassified Information Technology Resources. The Security Requirements clause requires the service provider to implement an Information Technology Security Plan to protect information processed, stored, or transmitted from unauthorized access, alteration, disclosure, or use. Service provider personnel requiring privileged access or limited privileged access to these information technology systems are subject to screening using the standard National Agency Check (NAC) forms appropriate to the level of risk for adverse impact to NASA missions. The Contracting Officer may allow the service provider to conduct its own screening, provided the service provider employs substantially equivalent screening procedures.

(f) This clause does not affect NASA's responsibilities under the Freedom of Information Act.

(g) The Contractor shall insert this clause, including this paragraph (g) , suitably modified to reflect the relationship of the parties, in all subcontracts that may require the furnishing of sensitive information.

(End of Clause)

52.212-2 EVALUATION-COMMERCIAL ITEMS (JAN 1999)

(a) The Government will award a contract resulting from this solicitation to the responsible offeror whose offer conforming to the solicitation will be most advantageous to the Government, price and other factors considered. The following factors shall be used to evaluate offers:

1. Technically acceptable
2. Lowest price

(b) A written notice of award or acceptance of an offer, mailed or otherwise furnished to the successful offeror within the time for acceptance specified in the offer, shall result in a binding contract without further action by either party. Before the offer's specified expiration time, the Government may accept an offer (or part of an offer), whether or not there are negotiations after its receipt, unless a written notice of withdrawal is received before award.

(End of provision)

52.212-3 Offeror Representations and Certifications-Commercial Items (Aug 2013) with it's Alternate I (Apr 2011)

Offeror Representations and Certifications, as completed by the Contractor are hereby Incorporated in their entirety by reference, with the same force and effect as if they were given in Full text. Vendors are required to register their company's information into the SAM data base through the CCR web-site at https://www.sam.gov/portal/public/SAM/ prior to any award by NASA.

(End of Clause)

52.212-5 CONTRACT TERMS AND CONDITIONS REQUIRED TO IMPLEMENT STATUTES OR EXECUTIVE ORDERS-COMMERCIAL ITEMS (Sept 2013)

(a) The Contractor shall comply with the following Federal Acquisition Regulation (FAR) clauses, which are incorporated in this contract by reference, to implement provisions of law or Executive orders applicable to acquisitions of commercial items:

(1) 52.222-50, Combating Trafficking in Persons (Feb 2009) 22 U.S.C 7104(g)).
Alternate I (Aug 2007) of 52.222-50 (22 U.S.C. 7104(g)).

(2) 52.233-3, Protest After Award (AUG 1996) (31 U.S.C. 3553).

(3) 52.233-4, Applicable Law for Breach of Contract Claim (OCT 2004) (Pub. L. 108-77, 108-78)

(b) The Contractor shall comply with the FAR clauses in this paragraph (b) that the Contracting Officer has indicated as being incorporated in this contract by reference to implement provisions of law or Executive orders applicable to acquisitions of commercial items:

☐ (1) 52.203-6, Restrictions on Subcontractor Sales to the Government (Sep 2006), with Alternate I (Oct 1995) (41 U.S.C. 253g and 10 U.S.C. 2402).
☐ (2) 52.203-13, Contract Code of Business Ethics and Conduct (Apr 2010) (Pub. L. 110-252, Title VI, Chapter 1 (41 U.S.C. 251 Note))
☐ (3) 52.203-15, Whistleblower Protections Under the American Recovery and Reinvestment Act of 2009 (Jun 2010) (Section 1553 of Pub. L. 111-5).
☒ (4) 52.204-10, Reporting Executive Compensation and First-Tier Subcontract Awards (Jul 2013) (Pub. L. 109-282) (31 U.S.C. 6101 note).
☐ (5) 52.204-11, American Recovery and Reinvestment Act—Reporting Requirements (Jul 2010) (Pub. L. 111-5).
☐ (6) 52.209-6, Protecting the Government's Interest When Subcontracting with Contractors Debarred, Suspended, or Proposed for Debarment (Aug 2013) (31 U.S.C. 6101 note).
☐ (7) 52. 209-9, Updates of Publicly Available Information Regarding Responsibility Matters (Jul 2013) (41 U.S.C. 2313).
☐ (8) 52.209-10, Prohibition on Contracting with Inverted Domestic Corporations (May 2012) (section 738 of Division C of Pub. L. 112-74, section 740 of Division C of Pub. L. 111-117, and section 743 of Division D of Pub. L. 111-8, and section 745 of Division D of Pub. L. 110-161).
☐ (9) 52.219-3, Notice of Total HUBZone Set-Aside or Sole Source Award (Nov 2011) (15 U.S.C. 657a).
☐ (10) 52.219-4, Notice of Price Evaluation Preference for HUBZone Small Business Concerns (Jan 2011) (if the offeror elects to waive the preference, it shall so indicate in its offer) (15 U.S.C. 657a).
☐ (11) [Reserved]
☒ (12) (i) 52.219-6, Notice of Total Small Business Set-Aside (Nov 2011) (15 U.S.C. 644).
☐ (ii) Alternate I (Nov 2011) of 52.219-6.
☐ (iii) Alternate II (Nov 2011) of 52.219-6.
☐ (13)(i) 52.219-7, Notice of Partial Small Business Set-Aside (June 2003) (15 U.S.C. 644).
☐ (ii) Alternate I (Oct 1995) of 52.219-7.
☐ (iii) Alternate II (Mar 2004) of 52.219-7.
☐ (14) 52.219-8, Utilization of Small Business Concerns (Jul 2013) (15 U.S.C. 637(d)(2) and (3)).
☐ (15)(i) 52.219-9, Small Business Subcontracting Plan (Jul 2013) (15 U.S.C. 637(d)(4)).
☐ (ii) Alternate I (Oct 2001) of 52.219-9.
☐ (iii) Alternate II (Oct 2001) of 52.219-9.
☐ (iv) Alternate III (Jul 2010) of 52.219-9
☒ (16) 52.219-13, Notice of Set-Aside of Orders (Nov 2011) (15 U.S.C. 644 (r))
☐ (17) 52.219-14, Limitations on Subcontracting (Nov 2011) (15 U.S.C. 637(a)(14)).

☐ (18) 52.219-16, Liquidated Damages—Subcontracting Plan (Jan 1999) (15 U.S.C. 637(d)(4)(F)(i)).
☐ (19) (i) 52.219-23, Notice of Price Evaluation Adjustment for Small Disadvantaged Business Concerns (Oct 2008) (10 U.S.C. 2323) (if the offeror elects to waive the adjustment, it shall so indicate in its offer).
☐ (ii) Alternate I (June 2003) of 52.219-23
☐ (20) 52.219-25, Small Disadvantaged Business Participation Program—Disadvantaged Status and Reporting (Jul 2013) (Pub. L. 103-355, section 7102, and 10 U.S.C. 2323).
☐ (21) 52.219-26, Small Disadvantaged Business Participation Program— Incentive Subcontracting (Oct 2000) (Pub. L. 103-355, section 7102, and 10 U.S.C. 2323).
☐ (22) 52.219-27, Notice of Service-Disabled Veteran-Owned Small Business Set-Aside (Nov 2011) (15 U.S.C. 657 f).
☒ (23) 52.219-28, Post Award Small Business Program Re-representation (Jul 2013) (15 U.S.C. 632(a)(2)).
☐ (24) 52.219-29 Notice of Set-Aside for Economically Disadvantage Women-Owned Small Business (EDWOSB) Concerns (Jul 2013) (15 U.S.C 637 (m)).
☐ (25) 52.219-30, Notice of Set-Aside for Women-Owned Small Business (WOSB) Concerns Eligible Under the WOSB Program (Jul 2013) (15 U.S.C 637 (m)).
☒ (26) 52.222-3, Convict Labor (June 2003) (E.O. 11755).
☐ (27) 52.222-19, Child Labor—Cooperation with Authorities and Remedies (Mar 2012) (E.O. 13126).
☒ (28) 52.222-21, Prohibition of Segregated Facilities (Feb 1999).
☒ (29) 52.222-26, Equal Opportunity (Mar 2007) (E.O. 11246).
☐ (30) 52.222-35, Equal Opportunity for Veterans (Sept 2010) (38 U.S.C. 4212).
☒ (31) 52.222-36, Affirmative Action for Workers with Disabilities (Oct 2010) (29 U.S.C. 793).
☒ (32) 52.222-37, Employment Reports on Veterans, (Sept 2010) (38 U.S.C. 4212).
☒ (33) 52.222-40 Notification of Employee Rights Under the National Labor Relations Act (Dec 2010) (E.O. 13496).
☐ (34) 52.222-54, Employment Eligibility Verification (Jul 2012). (Executive Order 12989). (Not applicable to the acquisition of commercially available off-the-shelf items or certain other types of commercial items as prescribed in 22.1803.)
☐ (35) 52.223-9, Estimate of Percentage of Recovered Material Content for EPA–Designated Items (May 2008)) (42 U.S.C. 6962(c)(3)(A)(ii)). (Not applicable to the acquisition of commercially available off-the-shelf items.)
☐ (ii) Alternate I (May 2008) of 52.223-9 (42 U.S.C. 6962(i)(2)(C)). (Not applicable to the acquisition of commercially available off-the-shelf items.)
☐ (36) 52.223-15, Energy Efficiency in Energy-Consuming Products (Dec 2007) (42 U.S.C. 8259b).
☐ (37) (i) 52.223-16, IEEE 1680 Standard for the Environmental Assessment of Personal Computer Products (Dec 2007) (E.O. 13423).
☐ (ii) Alternate I (Dec 2007) of 52.223-16.
☒ (38) 52.223-18, Encouraging Contractor Policies to Ban Text Messaging While Driving (Aug 2011) (E.O. 13513).
☐ (39) 52.225-1, Buy American Act—Supplies (Feb 2009) (41 U.S.C. 10a-10d)
☒ (40)(i) 52.225-3, Buy American Act—Free Trade Agreements—Israeli Trade Act (Nov 2012) (41 U.S.C. chapter 83, 19 U.S.C. 3301 note, 19 U.S.C. 2112 note, 19 U.S.C. 3805 note, 19 U.S.C. 4001 note, Pub. L. 103-182, 108-77, 108-78, 108-286, 108-302, 109-53, 109-169, 109-283, 110-138, 112-41, 112-42, and 112-43).
☐ (ii) Alternate I (Mar 2012) of 52.225-3
☐ (iii) Alternate II (Mar 2012) of 52.225-3
☐ (iv) Alternate III (Nov 2012) of 52.225-3
☐ (41) 52.225-5, Trade Agreements (Sept 2013) (19 U.S.C. 2501, *et seq.*, 19 U.S.C. 3301 note).
☒ (42) 52.225-13, Restrictions on Certain Foreign Purchases (June 2008) (E.O.'s, proclamations, and statutes administered by the Office of Foreign Assets Control of the Department of the Treasury).
☐ (43) 52.225-26, Contractors Performing Private Security Functions Outside the United States (Jul 2013) (Section 862, as amended, of the National Defense Authorization Act for Fiscal Year 2008; 10 U.S.C. 2302 Note).
☐ (44) 52.226-4, Notice of Disaster or Emergency Area Set-Aside (Nov 2007) (42 U.S.C. 5150). (WON'T USE)
☐ (45) 52.226-5, Restrictions on Subcontracting Outside Disaster or Emergency Area (Nov 2007) (42 U.S.C. 5150).
☐ (46) 52.232-29, Terms for Financing of Purchases of Commercial Items (Feb 2002) (41 U.S.C. 255(f), 10 U.S.C. 2307(f)).
☐ (47) 52.232-30, Installment Payments for Commercial Items (Oct 1995) (41 U.S.C. 255(f), 10 U.S.C. 2307(f)).
☒ (48) 52.232-33, Payment by Electronic Funds Transfer— System for Award Management (Jul 2013) (31 U.S.C. 3332).

☐ (49) 52.232-34, Payment by Electronic Funds Transfer—Other than System for Award Management (Jul 2013) (31 U.S.C. 3332).
☐ (50) 52.232-36, Payment by Third Party (Jul 2013) (31 U.S.C. 3332).
☐ (51) 52.239-1, Privacy or Security Safeguards (Aug 1996) (5 U.S.C. 552a).
☐ (52)(i) 52.247-64, Preference for Privately Owned U.S.-Flag Commercial Vessels (Feb 2006) (46 U.S.C. Appx. 1241(b) and 10 U.S.C. 2631).
☐ (ii) Alternate I (Apr 2003) of 52.247-64.
(c) The Contractor shall comply with the FAR clauses in this paragraph (c), applicable to commercial services, that the Contracting Officer has indicated as being incorporated in this contract by reference to implement provisions of law or Executive orders applicable to acquisitions of commercial items:
☐ (1) 52.222-41, Service Contract Act of 1965, as Amended (Nov 2007) (41 U.S.C. 351, *et seq.*).
☐ (2) 52.222-42, Statement of Equivalent Rates for Federal Hires (May 1989) (29 U.S.C. 206 and 41 U.S.C. 351, *et seq.*).
☐ (3) 52.222-43, Fair Labor Standards Act and Service Contract Act-Price Adjustment (Multiple Year and Option Contracts) (Sep 2009) (29 U.S.C. 206 and 41 U.S.C. 351, *et seq.*).
☐ (4) 52.222-44, Fair Labor Standards Act and Service Contract Act-Price Adjustment (Sep 2009) (29 U.S.C. 206 and 41 U.S.C. 351, *et seq.*).
☐ (5) 52.222-51, Exemption from Application of the Service Contract Act to Contracts for Maintenance, Calibration, or Repair of Certain Equipment--Requirements (Nov 2007) (41 U.S.C. 351, et seq.).
☐ (6) 52.222-53, Exemption from Application of the Service Contract Act to Contracts for Certain Services--Requirements (Feb 2009) (41 U.S.C. 351, et seq.).
☐ (7) 52.222-17, Nondisplacement of Qualified Workers (JAN 2013) (E.O.13495).
☐ (8) 52.226-6, Promoting Excess Food Donation to Nonprofit Organizations (Mar 2009) (Pub. L. 110-247).
☐ (9) 52.237-11, Accepting and Dispensing of $1 Coin (Sept 2008) (31 U.S.C. 5112(p)(1)).
(d) *Comptroller General Examination of Record.* The Contractor shall comply with the provisions of this paragraph (d) if this contract was awarded using other than sealed bid, is in excess of the simplified acquisition threshold, and does not contain the clause at 52.215-2, Audit and Records—Negotiation.

(1) The Comptroller General of the United States, or an authorized representative of the Comptroller General, shall have access to and right to examine any of the Contractor's directly pertinent records involving transactions related to this contract.

(2) The Contractor shall make available at its offices at all reasonable times the records, materials, and other evidence for examination, audit, or reproduction, until 3 years after final payment under this contract or for any shorter period specified in FAR Subpart 4.7, Contractor Records Retention, of the other clauses of this contract. If this contract is completely or partially terminated, the records relating to the work terminated shall be made available for 3 years after any resulting final termination settlement. Records relating to appeals under the disputes clause or to litigation or the settlement of claims arising under or relating to this contract shall be made available until such appeals, litigation, or claims are finally resolved

(3) As used in this clause, records include books, documents, accounting procedures and practices, and other data, regardless of type and regardless of form. This does not require the Contractor to create or maintain any record that the Contractor does not maintain in the ordinary course of business or pursuant to a provision of law.

(e)(1) Notwithstanding the requirements of the clauses in paragraphs (a), (b), (c), and (d) of this clause, the Contractor is not required to flow down any FAR clause, other than those in paragraphs (e)(1) paragraph in a subcontract for commercial items. Unless otherwise indicated below, the extent of the flow down shall be as required by the clause—

(i) 52.203-13, Contractor Code of Business Ethics and Conduct (Apr 2010) (Pub. L. 110-252, Title VI, Chapter 1 (41 U.S.C. 251 note)).

(ii) 52.219-8, Utilization of Small Business Concerns (Jul 2013) (15 U.S.C. 637(d)(2) and (3)), in all subcontracts that offer further subcontracting opportunities. If the subcontract (except subcontracts to small business concerns) exceeds $650,000 ($1.5 million for construction of any public facility), the

subcontractor must include 52.219-8 in lower tier subcontracts that offer subcontracting opportunities.

(iii) 52.222-17, Nondisplacement of Qualified Workers (JAN 2013) (E.O.13495).
(iv) 52.222-26, Equal Opportunity (Mar 2007) (E.O. 11246).
(v) 52.222-35, Equal Opportunity for Veterans, (Sept 2010) (38 U.S.C. 4212).
(vi) 52.222-36, Affirmative Action for Workers with Disabilities (Oct 2010) (29 U.S.C. 793).
(vii) 52.222-40 Notification of Employee Rights Under the National Labor Relations Act (Dec 2010) (E.O.13496). Flow down required in accordance with paragraph (f) of FAR clause 52.222-40.
(viii) 52.222-41, Service Contract Act of 1965 (Nov 2007) (41 U.S.C. 351, *et seq.*).
(ix) 52.222-50, Combating Trafficking in Persons (Feb 2009) (22 U.S.C. 7104(g)).
___Alternate I (Aug 2007) of 52.222-50 (22 U.S.C. 7104(g)).
(x) 52.222-51, Exemption from Application of the Service Contract Act to Contracts for Maintenance, Calibration, or Repair of Certain Equipment-Requirements (Nov 2007) (41 U.S.C. 351, *et seq.*).
(xi) 52.222-53, Exemption from Application of the Service Contract Act to Contracts for Certain Services-Requirements (Feb 2009) (41 U.S.C. 351, *et seq.*).
(xii) 52.222-54, Employment Eligibility Verification (Jul 2012).
(xiii) 52.225-26, Contractors Performing Private Security Functions Outside the United States (Jul 2013) (Section 862, as amended, of the National Defense Authorization Act for Fiscal Year 2008; 10 U.S.C.2302
(xiv) 52.226-6, Promoting Excess Food Donation to Nonprofit Organizations (Mar 2009) (Pub. L. 110-247). Flow down required in accordance with paragraph (e) of FAR clause 52.226-6.
(xv) 52.247-64, Preference for Privately Owned U.S.-Flag Commercial Vessels (Feb 2006) (46 U.S.C. Appx. 1241(b) and 10 U.S.C. 2631). Flow down required in accordance with paragraph (d) of FAR clause 52.247-64.
(2) While not required, the contractor may include in its subcontracts for commercial items a minimal number of additional clauses necessary to satisfy its contractual obligations.

(End of Clause)

52.219-1 SMALL BUSINESS PROGRAM REPRESENTATIONS. (APR 2012) - ALTERNATE I (APR 2011)

(a)(1) The North American Industry Classification System (NAICS) code for this acquisition is [*insert NAICS code*].

(2) The small business size standard is [*insert size standard*].

(3) The small business size standard for a concern which submits an offer in its own name, other than on a construction or service contract, but which proposes to furnish a product which it did not itself manufacture, is 500 employees.

(b) *Representations.* (1) The offeror represents as part of its offer that it [ ] is, [ ] is not a small business concern.

(2) (*Complete only if the offeror represented itself as a small business concern in paragraph (b)(1) of this provision.*) The offeror represents, for general statistical purposes, that it [ ] is, [ ] is not, a small disadvantaged business concern as defined in 13 CFR 124.1002.

(3) (*Complete only if the offeror represented itself as a small business concern in paragraph (b)(1) of this provision.*) The offeror represents as part of its offer that it [ ] is, [ ] is not a women-owned small business concern.

(4) Women-owned small business (WOSB) concern eligible under the WOSB Program. (*Complete only if the offeror represented itself as a women-owned small business concern in paragraph (b)(3) of this provision.*) The offeror represents as part of its offer that-

(i) It [ ] is, [ ] is not a WOSB concern eligible under the WOSB Program, has provided all the required documents to the WOSB Repository, and no change in circumstances or adverse decisions have been issued that affects its eligibility; and

(ii) It [ ] is, [ ] is not a joint venture that complies with the requirements of 13 CFR part 127, and the representation in paragraph (b)(4)(i) of this provision is accurate for each WOSB concern eligible under the WOSB Program participating in the joint venture. [The offeror shall enter the name or names of the WOSB concern eligible under the WOSB Program and other small businesses that are participating in the joint venture: ----------.] Each WOSB concern eligible under the WOSB Program participating in the joint venture shall submit a separate signed copy of the WOSB representation.

(5) Economically disadvantaged women-owned small business (EDWOSB) concern. (*Complete only if the offeror represented itself as a women-owned small business concern eligible under the WOSB Program in (b)(4) of this provision.*) The offeror represents as part of its offer that-

(i) It [ ] is, [ ] is not an EDWOSB concern eligible under the WOSB Program, has provided all the required documents to the WOSB Repository, and no change in circumstances or adverse decisions have been issued that affects its eligibility; and

(ii) It [ ] is, [ ] is not a joint venture that complies with the requirements of 13 CFR part 127, and the representation in paragraph (b)(5)(i) of this provision is accurate for each EDWOSB concern participating in the joint venture. [The offeror shall enter the name or names of the EDWOSB concern and other small businesses that are participating in the joint venture: ----------.] Each EDWOSB concern participating in the joint venture shall submit a separate signed copy of the EDWOSB representation.

(6) (*Complete only if the offeror represented itself as a small business concern in paragraph (b)(1) of this provision.*) The offeror represents as part of its offer that it [ ] is, [ ] is not a veteran-owned small business concern.

(7) (*Complete only if the offeror represented itself as a veteran-owned small business concern in paragraph (b)(6) of this provision.*) The offeror represents as part of its offer that it [ ] is, [ ] is not a service-disabled veteran-owned small business concern.

(8) *(Complete only if the offeror represented itself as a small business concern in paragraph (b)(1) of this provision.)* The offeror represents, as part of its offer, that-

(i) It [ ] is, [ ] is not a HUBZone small business concern listed, on the date of this representation, on the List of Qualified HUBZone Small Business Concerns maintained by the Small Business Administration, and no material changes in ownership and control, principal office, or HUBZone employee percentage have occurred since it was certified in accordance with 13 CFR Part 126; and

(ii) It [ ] is, [ ] is not a HUBZone joint venture that complies with the requirements of 13 CFR Part 126, and the representation in paragraph (b)(8)(i) of this provision is accurate for each HUBZone small business concern participating in the HUBZone joint venture. [The offeror shall enter the names of each of the HUBZone small business concerns participating in the HUBZone joint venture: .] Each HUBZone small business concern participating in the HUBZone joint venture shall submit a separate signed copy of the HUBZone representation.

(9) (*Complete if offeror represented itself as disadvantaged in paragraph (b)(2) of this provision.)* The offeror shall check the category in which its ownership falls:

_____ Black American.

_____ Hispanic American.

_____ Native American (American Indians, Eskimos, Aleuts, or Native Hawaiians).

_____ Asian-Pacific American (persons with origins from Burma, Thailand, Malaysia, Indonesia, Singapore, Brunei, Japan, China, Taiwan, Laos, Cambodia (Kampuchea), Vietnam, Korea, The Philippines, U.S. Trust Territory of the Pacific Islands (Republic of Palau), Republic of the Marshall Islands, Federated States of Micronesia, the Commonwealth of the Northern Mariana Islands, Guam, Samoa, Macao, Hong Kong, Fiji, Tonga, Kiribati, Tuvalu, or Nauru).

_____ Subcontinent Asian (Asian-Indian) American (persons with origins from India, Pakistan, Bangladesh, Sri Lanka, Bhutan, the Maldives Islands, or Nepal).

_____ Individual/concern, other than one of the preceding.

(c) *Definitions.* As used in this provision -

"Economically disadvantaged women-owned small business (EDWOSB) concern" means a small business concern that is at least 51 percent directly and unconditionally owned by, and the management and daily business operations of which are controlled by, one or more women who are citizens of the United States and who are economically disadvantaged in accordance with 13 CFR part 127. It automatically qualifies as a women-owned small business concern eligible under the WOSB Program.

"Service-disabled veteran-owned small business concern" -

(1) Means a small business concern -

(i) Not less than 51 percent of which is owned by one or more service-disabled veterans or, in the case of any publicly owned business, not less than 51 percent of the stock of which is owned by one or more service-disabled veterans; and

(ii) The management and daily business operations of which are controlled by one or more service-disabled veterans or, in the case of a service-disabled veteran with permanent and severe disability, the spouse or permanent caregiver of such veteran.

(2) Service-disabled veteran means a veteran, as defined in 38 U.S.C. 101(2), with a disability that is service-connected, as defined in 38 U.S.C. 101(16).

"Small business concern" means a concern, including its affiliates, that is independently owned and operated, not dominant in the field of operation in which it is bidding on Government contracts, and qualified as a small business under the criteria in 13 CFR part 121 and the size standard in paragraph (a) of this provision.

"Veteran-owned small business concern" means a small business concern -

(1) Not less than 51 percent of which is owned by one or more veterans (as defined at 38 U.S.C. 101(2)) or, in the case of any publicly owned business, not less than 51 percent of the stock of which is owned by one or more veterans; and

(2) The management and daily business operations of which are controlled by one or more veterans.

"Women-owned small business concern" means a small business concern -

(1) That is at least 51 percent owned by one or more women; or in the case of any publicly owned business, at least 51 percent of the stock of which is owned by one or more women; and

(2) Whose management and daily business operations are controlled by one or more women.

"Women-owned small business (WOSB) concern eligible under the WOSB Program" (in accordance with 13 CFR part 127), means a small business concern that is at least 51 percent directly and unconditionally owned by, and the management and daily business operations of which are controlled by, one or more women who are citizens of the United States.

(d) *Notice*. (1) If this solicitation is for supplies and has been set aside, in whole or in part, for small business concerns, then the clause in this solicitation providing notice of the set-aside contains restrictions on the source of the end items to be furnished.

(2) Under 15 U.S.C. 645(d), any person who misrepresents a firm's status as a business concern that is small, HUBZone small, small disadvantaged, service-disabled veteran-owned small, economically disadvantaged women-owned small, or women-owned small eligible under the WOSB Program in order to obtain a contract to be awarded under the preference programs established pursuant to section 8, 9, 15, 31, and 36 of the Small Business Act or any other provision of Federal law that specifically references section 8(d) for a definition of program eligibility, shall-

(i) Be punished by imposition of fine, imprisonment, or both;

(ii) Be subject to administrative remedies, including suspension and debarment; and

(iii) Be ineligible for participation in programs conducted under the authority of the Act.

(End of provision)

52.225-18 PLACE OF MANUFACTURE (SEPT 2006)

(a) *Definitions*. As used in this clause—

" Manufactured end product" means any end product in Federal Supply Classes (FSC) 1000-9999, except—

(1) FSC 5510, Lumber and Related Basic Wood Materials;

(2) Federal Supply Group (FSG) 87, Agricultural Supplies;

(3) FSG 88, Live Animals;

(4) FSG 89, Food and Related Consumables;

(5) FSC 9410, Crude Grades of Plant Materials;

(6) FSC 9430, Miscellaneous Crude Animal Products, Inedible;

(7) FSC 9440, Miscellaneous Crude Agricultural and Forestry Products;

(8) FSC 9610, Ores;

(9) FSC 9620, Minerals, Natural and Synthetic; and

(10) FSC 9630, Additive Metal Materials.

"Place of manufacture" means the place where an end product is assembled out of components, or otherwise made or processed from raw materials into the finished product that is to be provided to the Government. If a product is disassembled and reassembled, the place of reassembly is not the place of manufacture.

(b) For statistical purposes only, the offeror shall indicate whether the place of manufacture of the end products it expects to provide in response to this solicitation is predominantly—

(1) ( ) In the United States (Check this box if the total anticipated price of offered end products manufactured in the United States exceeds the total anticipated price of offered end products manufactured outside the United States); or

(2) ( ) Outside the United States.

(End of provision)

Marshall Space Flight Center
Specification for Temposonic Deflection Transducer

1. Procurement is for the following quantities of Magnetostrictive Linear-Position Sensors.

Stroke	qty	MTS Temposonic Part Number
12"	45	ERS0120UD341V03
18"	200	ERS0180UD341V03
48"	10	ERS0480UD341V03
60"	30	ERS0600UD341V03

2. All sensors shall be completely compatible and interchangeable with MTS Temposonic Part numbers to support Structural Strength Testing at MSFC.

3. Non-Linearity: maximum ±0.02% Full Stroke

4. Repeatability: maximum ±0.001% Full Stroke

5. Output Signal Update Rate: minimum 1.5 kHz

6. Sensor Model: Rod & Cylinder Style

7. Type of Thread: Inside thread 1/4-28

8. Stroke Lengths shall be specified in inches, per the table above

9. Excitation Voltage: 24VDC

10. Analog Signal Output: each sensor shall provide 2 separate Voltage output signals
    0 to 10 VDC
    10 to 0 VDC

11. Connector shall be mounted to the sensor. Pigtail cable will not be accepted.

12. Connector Pinout shall include the following
    - 0 to 10 VDC
    - 10 to 0 VDC
    - Return for Voltage Signal
    - +24VDC supply voltage
    - DC supply Ground

13. Operating Range: -40°F to 167°F

14. Sensor Rod shall be constructed of 303 Stainless Steel

15. Sensor housing shall be constructed of Aluminum and include slots for sensor mounting foot

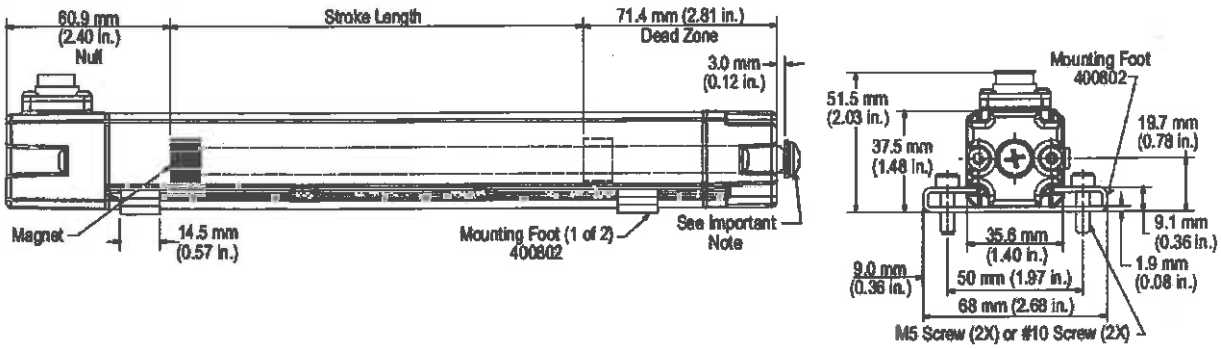

Figure 1. Temposonic Diagram & Dimensions

16. Vendor shall provide a Certificate of Compliance or a Verification Matrix to verify that all technical requirements for the procurement have been met.

17. Vendor shall provide a Certified Material Test Report (CMTR) for all material used to fabricate sensors.

-----PLEASE QUOTE FOB DESTINATION TO MSFC, AL 35812