1. MATERIAL: 4340 STEEL SAE-AMS-6415S
2. 64 Ra ALL OVER UNLESS OTHERWISE SPECIFIED.
3. HEAT TREAT: Rc 35-45 BEFORE FINISH MACHINING.
4. BREAK ALL EDGES .01-.02 UNLESS OTHERWISE SPECIFIED.
5. ALL CORNER FILLETS TO BE R.015-.020 UNLESS OTHERWISE SPECIFIED.
6. UNLESS OTHERWISE SPECIFIED ALL FACES AND DIAMETERS MUST BE ⌖ .001 A B

7. MACHINING OF OD AND ID TO BE FINALIZED BEFORE MACHINING 4 SLOTS.
8. MACHINE 4 SLOTS AFTER FINAL MACHINING OF THE OD AND ID.
9. ELECTROCHEMICAL ETCH DRAWING PART NUMBER 060928MRA954 ON SPECIFIED SURFACE, PER SAE-AS478, METHOD 7A, OR, LASER ETCH DRAWING PART NUMBER 060928MRA954 ON SPECIFIED SURFACE, PER SAE-AS478, METHOD 15B1. (SHALLOW ENGRAVE 0.0001-0.0006 DEEP). (ZONE B5)
10. BEFORE SHIPPING, PROTECT WITH CONTAMINATION BARRIER SUCH AS WD-40, OR EQUIVALENT. USE NEW AND CLEAN POLYETHYLENE BAG FOR SMALL ITEMS, OR 4 MIL THICK MINIMUM POLYETHYLENE SHEET SEALED WITH PACKAGING TAPE. MARK WITH DRAWING PART NUMBER 060928MRA954 ON TAG ATTACHED TO BAG.
11. TO BE BALANCED DYNAMICALLY BY NASA. SEE NASA DRAWING NUMBER 060928MRA505 FOR BALANCE REQUIREMENTS.

REVISION HISTORY

ZONE	REV	DESCRIPTION	DATE	APPROVED
A1 C2 C7	A	INCREASED FORMAT SIZE (D TO E) ADDED 4X .1875 WIDE SLOTS	10/25/2013	RLD MAS

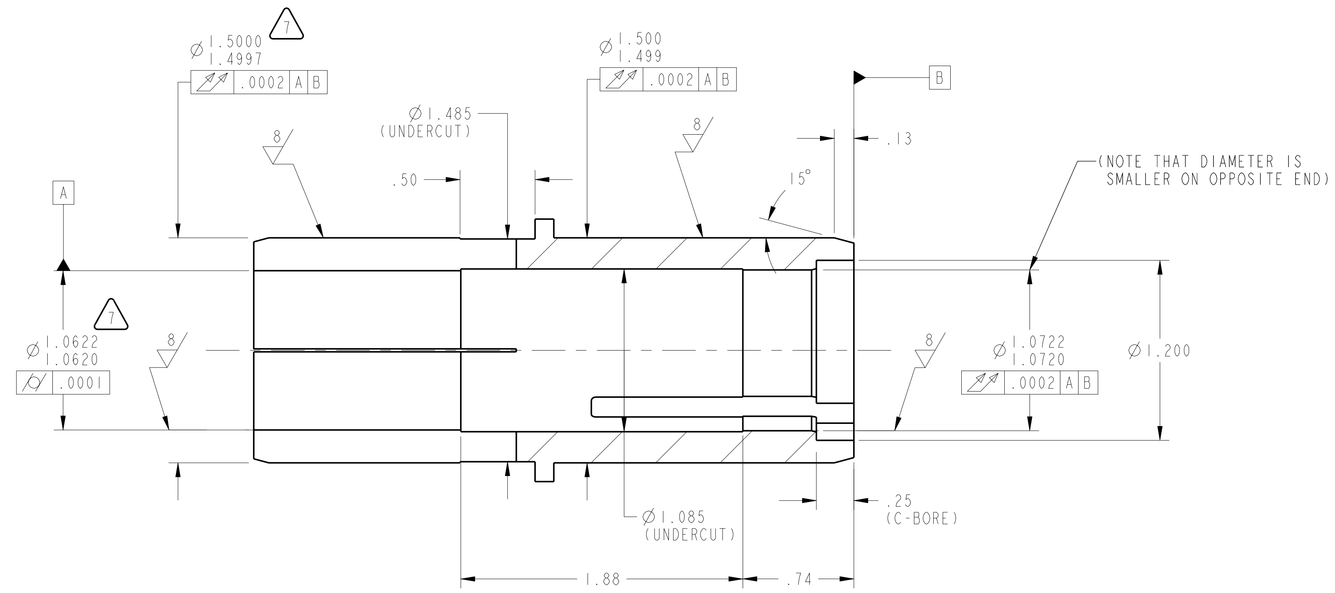

SECTION A-A

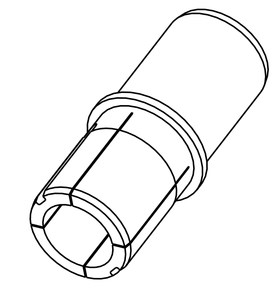

ISO VIEW
SCALE 1/1

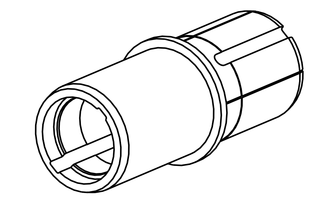

ISO VIEW
SCALE 1/1

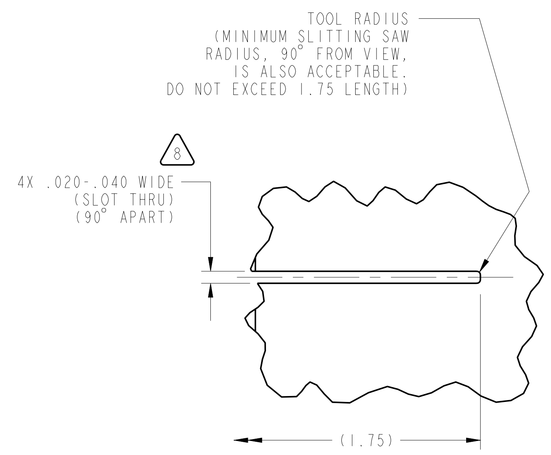

DETAIL B
SCALE 8/1

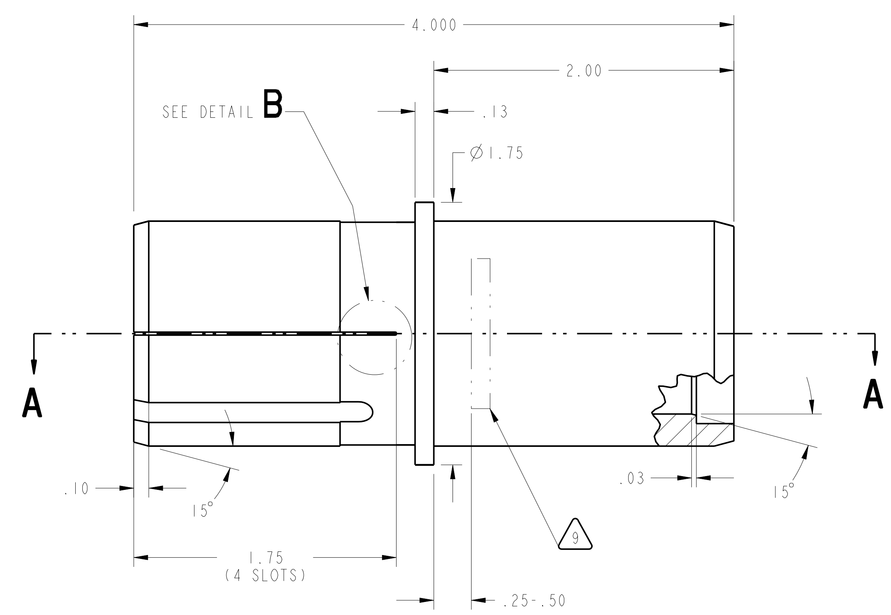

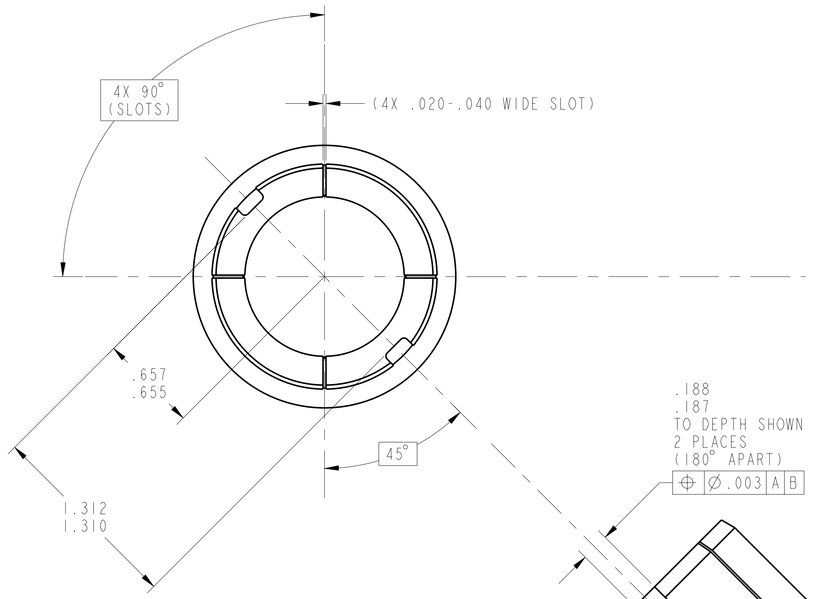

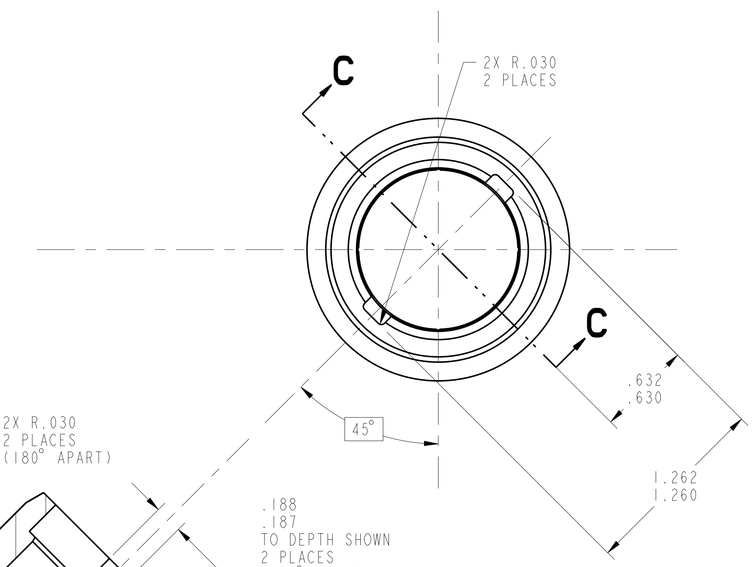

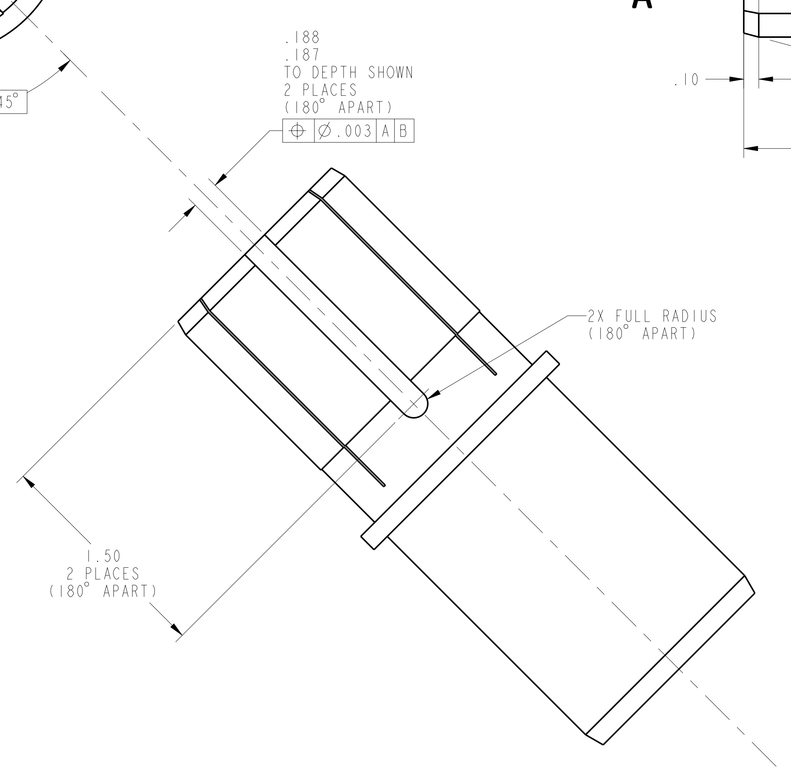

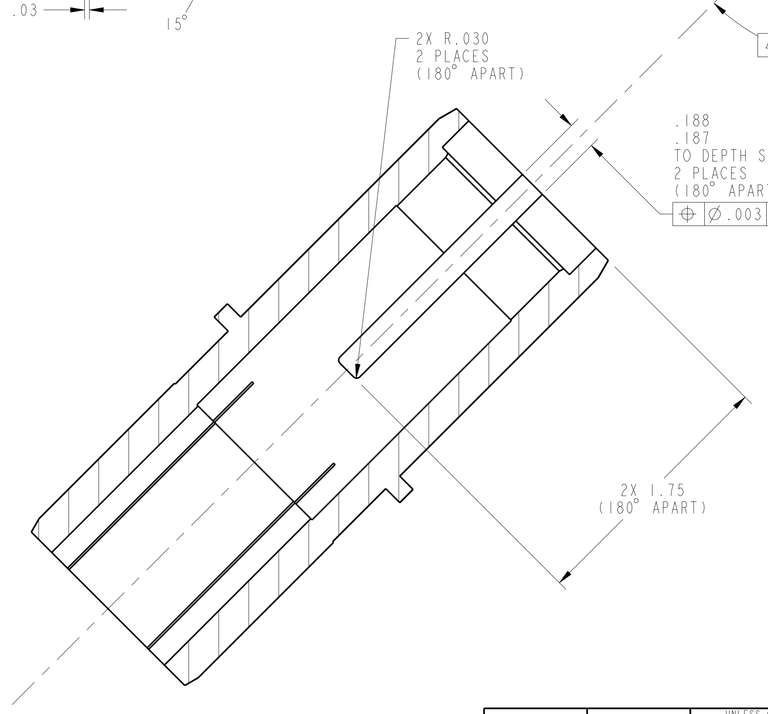

SECTION C-C

		UNLESS OTHERWISE SPECIFIED DIMENSIONS ARE IN INCHES X.X ± .03 X.XXX ± .005 X.XX ± .01 ANGLE ± 0° 30' BREAK EDGES: INTERPRET DIMENSIONS AND TOLERANCES PER ASME Y14.5M - 1994	RELEASE DATE	2010/07/06
			DESIGNER	DEZ / R. DETAMORE
			ENGINEER	DER / M. STEVENS
060928MRA505	2-SPEED TRANS		STATE	Released
NEXT ASSY	USED ON	THIRD ANGLE PROJECTION	WINDCHILL PRODUCT	060928_Variable_Speed_Transmissio
APPLICATION			MODEL	A954_SLEEVE_ADAPTER
CONTRACTOR:				
CONTRACT NO:				

NATIONAL AERONAUTICS AND SPACE ADMINISTRATION
JOHN H. GLENN RESEARCH CENTER
LEWIS FIELD, CLEVELAND, OHIO

TITLE: SLEEVE, ADAPTER

SIZE	CAGE CODE	DWG NO	REV
E	1QFP5	060928MRA954	A

SCALE: 2/1 SHEET 1 OF 1

DWG NO 060928MRA954 SH 1 REV A

NAME:DETAMOR OBJECT:A954_SLEEVE_ADAPTER DATE:Oct 13 13:09:33