REVISION HISTORY				
ZONE	REV	DESCRIPTION	DATE	APPROVED

1. MATERIAL: 4340 STEEL, SAE AMS 6415S.
2. PRIOR TO FABRICATION, MATERIAL MUST PASS ULTRASONIC INSPECTION PER SAE-AMS-2154, TYPE I (IMMERSION), CLASS A.
3. HEAT TREAT: Rc 38-42 PRIOR TO FINISH.
4. 64 Ra ALL OVER UNLESS OTHERWISE NOTED.
5. UNLESS OTHERWISE SPECIFIED ALL FACES AND DIAMETERS MUST BE ⌭ .004 A B
6. ALL CORNER FILLETS TO BE .015-.020 UNLESS OTHERWISE SPECIFIED.
7. BREAK ALL EDGES .010-.020 UNLESS OTHERWISE SPECIFIED.
8. FINISHED PART MUST PASS DYE PENETRANT INSPECTION PER ASTM-E1417 TYPE I, METHOD A, SENSITIVITY LEVEL 2. ACCEPTANCE PER MIL-STD-1907, GRADE C. REMOVAL OF DEFECTS BY GRINDING OR POLISHING SHALL BE WITHIN DIMENSIONAL TOLERANCES.
9. BLACK OXIDE PER MIL-DTL-13924D, CLASS 1.
10. ELECTROCHEMICAL ETCH DRAWING PART NUMBER 060928MRA758 ON SPECIFIED SURFACE, PER SAE-AS478, METHOD 7A, OR OPTIONAL, LASER ETCH DRAWING PART NUMBER ON SPECIFIED SURFACE, PER SAE-AS478, METHOD 15B1. (SHALLOW ENGRAVE 0.0001-0.0006 DEEP). (ZONE E6)
11. BEFORE SHIPPING, PROTECT WITH CONTAMINATION BARRIER SUCH AS WD-40, OR EQUIVALENT. USE NEW AND CLEAN POLYETHYLENE BAG, OR 4 MIL THICK MINIMUM POLYETHYLENE SHEET SEALED WITH PACKAGING TAPE. MARK WITH DRAWING PART NUMBER 060928MRA758 ON TAG ATTACHED TO BAG.
12. TO BE DYNAMICALLY BALANCED BY NASA. SEE ASSEMBLY AND BALANCING REQUIREMENTS ON DRAWING NUMBER 060928MRA705.

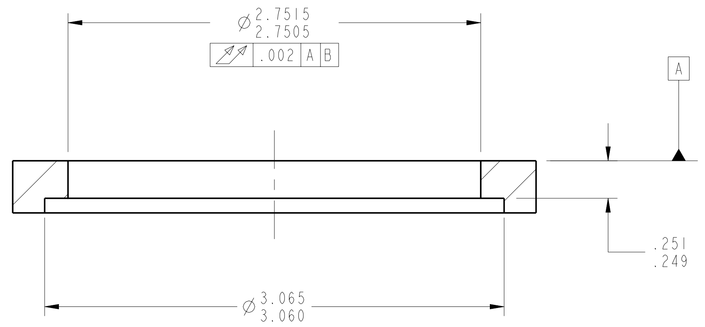

SECTION **A-A**

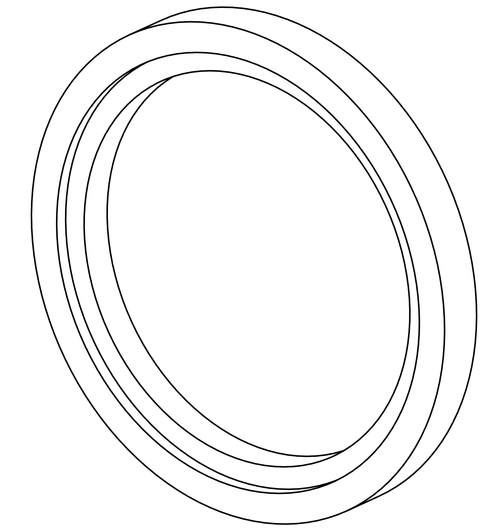

ISO VIEW

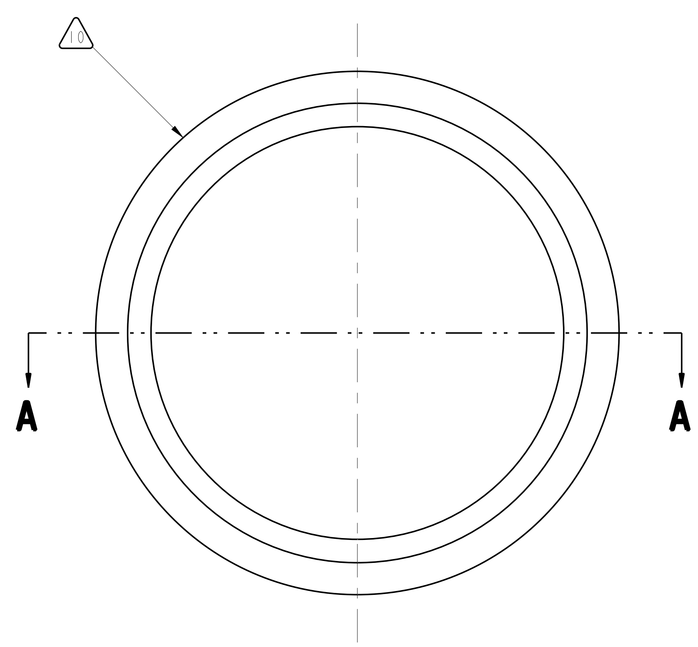

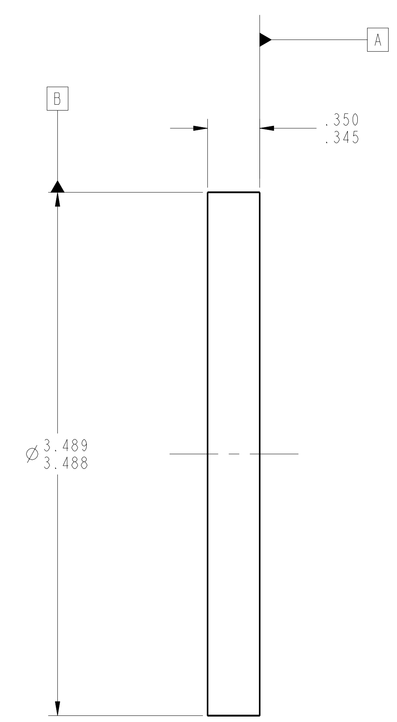

		UNLESS OTHERWISE SPECIFIED DIMENSIONS ARE IN INCHES X.X ± 0.03 X.XXX ± 0.005 X.XX ± 0.01 ANGLE ± 0° 30' BREAK EDGES: .01-.02 INTERPRET DIMENSIONS AND TOLERANCES PER ASME Y14.5M - 1994 THIRD ANGLE PROJECTION	RELEASE DATE	09/23/2013
			DESIGNER	DEZ / R. DETAMORE
			ENGINEER	DER / M. STEVENS
060928MRA705	2-SPEED TRANS.		STATE	Released
NEXT ASSY	USED ON		WINDCHILL PRODUCT	060928_Variable_Speed_Transmissio
APPLICATION			MODEL	A758_RING_LOCK_AFT
CONTRACTOR:	-			
CONTRACT NO:	-			

NATIONAL AERONAUTICS AND SPACE ADMINISTRATION
JOHN H. GLENN RESEARCH CENTER
LEWIS FIELD, CLEVELAND, OHIO

TITLE: RING, LOCK, AFT

SIZE	CAGE CODE	DWG NO	REV
E	1QFP5	060928MRA758	-

SCALE: 2/1 SHEET 1 OF 1

DWG NO 060928MRA758 SH 1 REV -

NAME/DIRETHOR OBJECTPATH/_RING_LOCK_AFT DATE:23-Sep-13 09:09:31