Burn Rig Test Hardware Drawing List
Machined Components Only
11-05-2013
John Mayer

Part Number	Description	Revision Approval Date	Revision	Material	Quantity	Comments
BR1002	HOUSING ALIGNMENT PIN	11/4/2013	A	Inconel 718	6	
BR1003	MAIN HOUSING/MAIN HOUSING ASSEMBLY	11/4/2013	A	Inconel 718	1	
BR1005	PLATE #1	11/4/2013	A	Inconel 718	1	
BR1007	MOUNTING ADAPTER	11/4/2013	A	Inconel 718	1	
BR1008	SHIM #1	11/4/2013	A	Haynes 188	20	
BR1009	SHOULDER SCREW	11/4/2013	A	Inconel 718	6	
BR1010	HOUSING TOP PLATE	11/4/2013	A	Inconel 718	1	
BR1011	HOUSING CLAMP	11/4/2013	A	Inconel 718	12	
BR1012	HOUSING BOTTOM PLATE #1	11/4/2013	A	Inconel 718	1	
BR1013	PIN	11/4/2013	A	Inconel 718	4	Installed into BR1003 at vendor
BR1014	VENT COVER	11/4/2013	A	Inconel 718	2	
BR1015	SIGHT WINDOW ADAPTER	11/4/2013	A	304 SS	2	
BR1017	PANEL SIMULATOR	11/4/2013	A	Inconel 718	2	
BR1024	SHIM #2	11/4/2013	A	Haynes 188	20	
BR1027	PLATE #2	11/4/2013	A	Inconel 718	1	
BR1028	HOUSING BOTTOM PLATE #2	11/4/2013	A	Inconel 718	1	

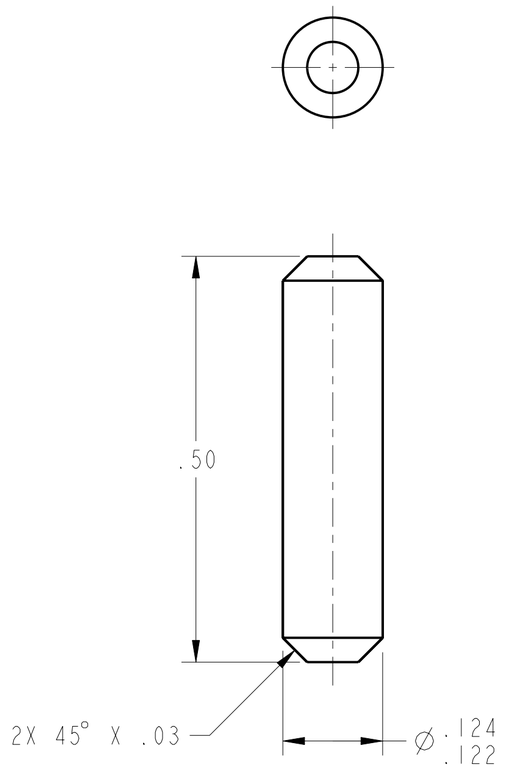

GENERAL NOTES

1. MATERIAL: INCONEL 718 ANNEALED PER AMS 5662 OR EQUIVALENT

2. 125 Ra ALL OVER PER ANSI/ASME B46.1.

3. ALL DIMENSIONS APPLY AFTER HEAT TREAT.

4. MATERIAL CERTIFICATE OF CONFORMANCE, HEAT TREAT FURNACE CHARTS/CERTIFICATIONS AND FULL INSPECTION REPORT REQUIRED.

5. HEAT TREAT MACHINED PART AS FOLLOWS:

   A) SOLUTION TREAT (ARGON FURNACE) - RAMP UP TO 1750°F FOR 1 HOUR PER INCH OF THICKNESS BUT 10 MINUTE MINIMUM, AIR COOL.

   B) PRECIPITATION HARDENING- RAMP UP TO 1325°F FOR 8 HOURS, FURNACE COOL TO 1150°F AND HOLD FOR 10 HRS, AIR COOL AFTERWARDS.

6. BAG, SEAL AND TAG PART PER SAE-AS478-35D.MARK ATTACHED TAG WITH IDENTIFICATION NUMBER. THE PART IDENTIFICATION NUMBER SHALL BE THE DRAWING NUMBER, A DASH, A SERIAL NUMBER AND THE DRAWING REVISION. FABRICATOR TO SERIALIZE PARTS DURING MANUFACTURE. SERIAL NUMBER(S) WILL BE PROVIDED BY GESS3.
   EXAMPLE: BR1002-001 REV -

CHG	ZONE	DESCRIPTION	APP/DATE
A	-	RETITLED	JJM 11-04-13

REVISIONS

PRIOR TO USE VERIFY THE INTENDED PURPOSE IN PDM ("FOR" ATTRIBUTE)

UNLESS OTHERWISE SPECIFIED DIMENSIONS ARE IN INCHES

CONTRACT NNC12BA01B

CONTRACTOR GESS3 TEAM

TOLERANCE ON	
.X	± 0.03
.XX	± 0.01
.XXX	± 0.005
FRACTION	± -
ANGULAR	± 0.50°
BREAK EDGES	.02 MAX

TASK ORDER	264
DRAFTER	J. ASSION
ENGINEER	J. MAYER
DESIGNER	J.ASSION

DIMENSIONING AND TOLERANCING PER ASME Y14.5M-1994

PDM REL LEVEL: PDM REVISION:

PDM DATABASE: NOT UNDER CONFIG MANAGEMENT

MODEL NAME: BR1002

CHECK FOR ANY OUTSTANDING ECO'S PRIOR TO USE

NATIONAL AERONAUTICS AND SPACE ADMINISTRATION
JOHN H. GLENN RESEARCH CENTER
LEWIS FIELD
CLEVELAND, OHIO

MAIN HOUSING SUB-ASSEMBLY

BR1034 A

1002 HOUSING ALIGNMENT PIN

SIZE	DRAWING NUMBER	REV	BLDG	AREA
C	BR1002	A	34	121

UNITS: INCH

SCALE:	INITIAL REL DATE	SHEET	DISCIPLINE
7/1	10-18-2013	1 OF 1	MECHANICAL

PRO/E VERSION:

REV A

SIZE C DRAWING NUMBER BR1002

NAME:JASSION OBJECT:BR1002 DATE:05-Nov-13 08:41:35

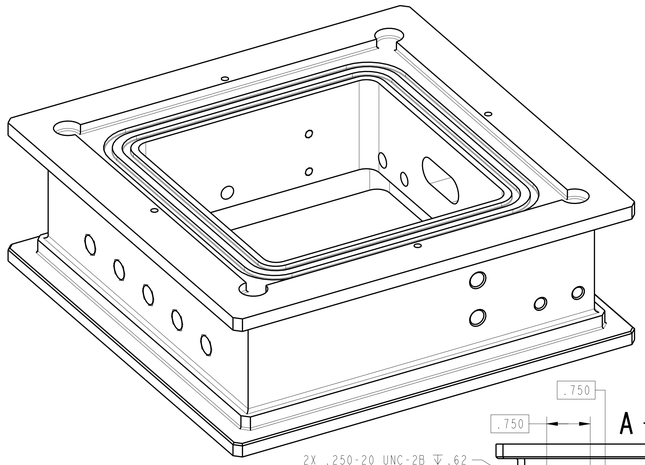

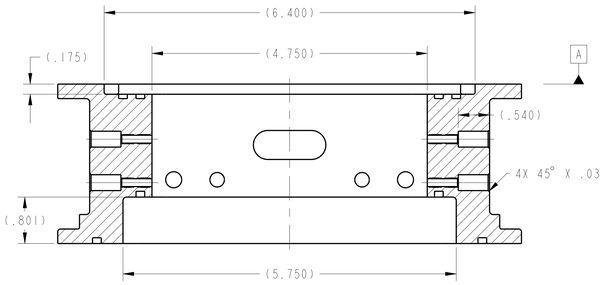

SECTION A-A

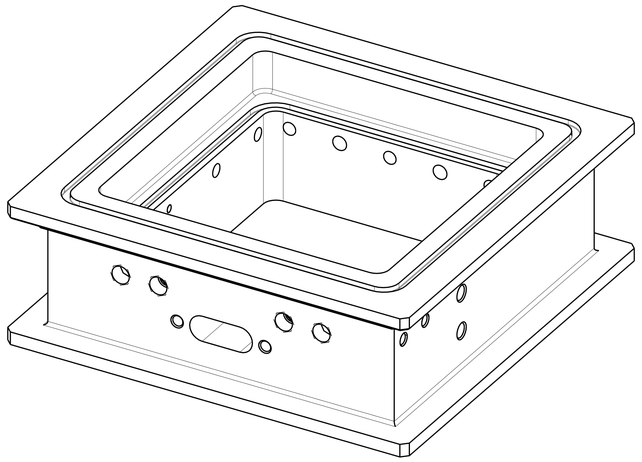

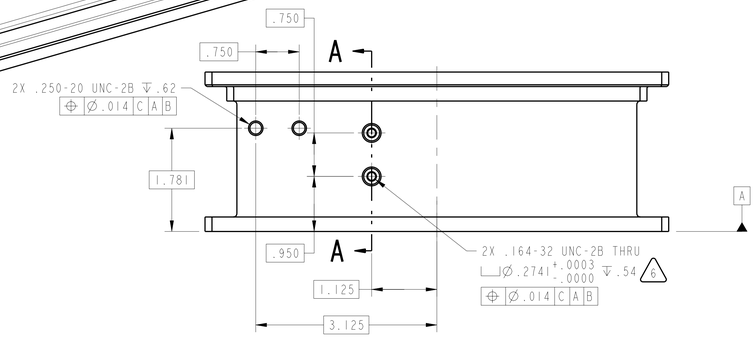

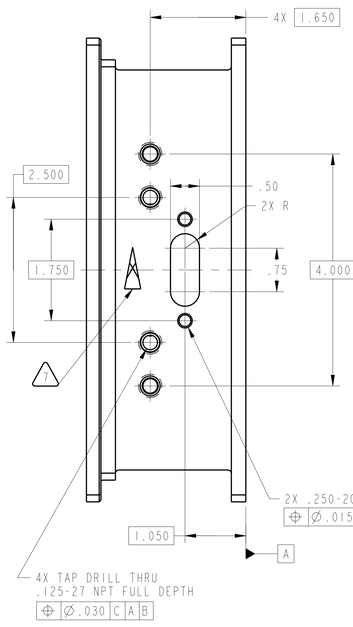

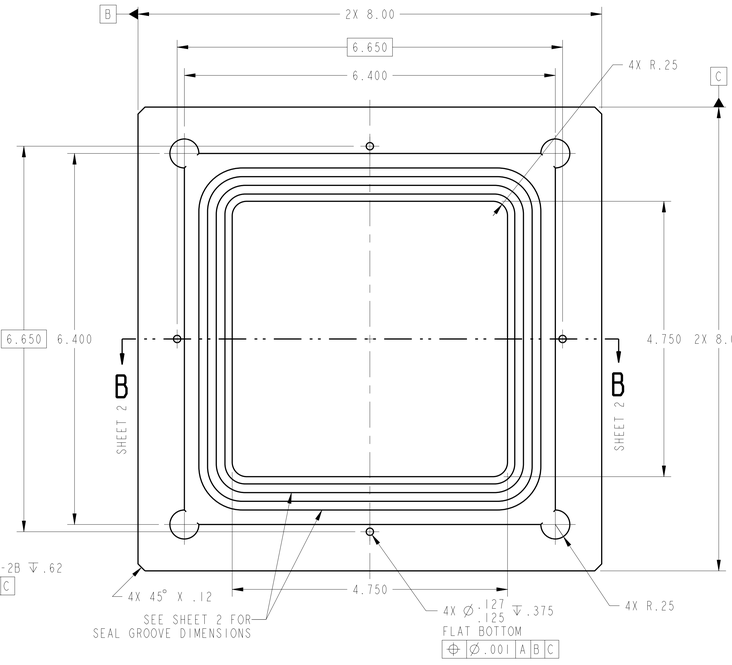

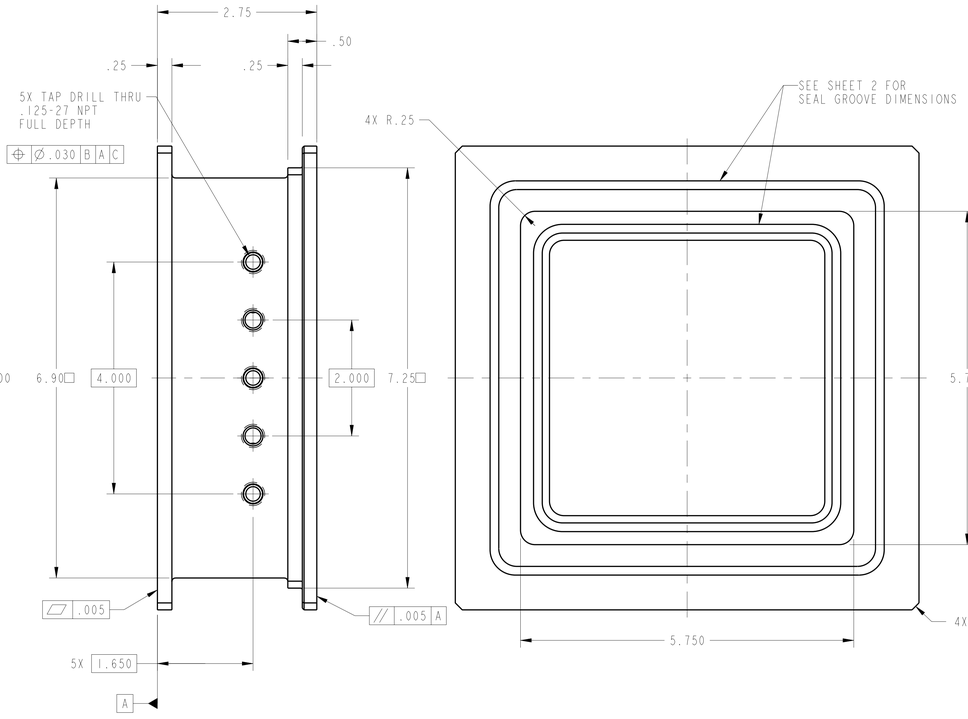

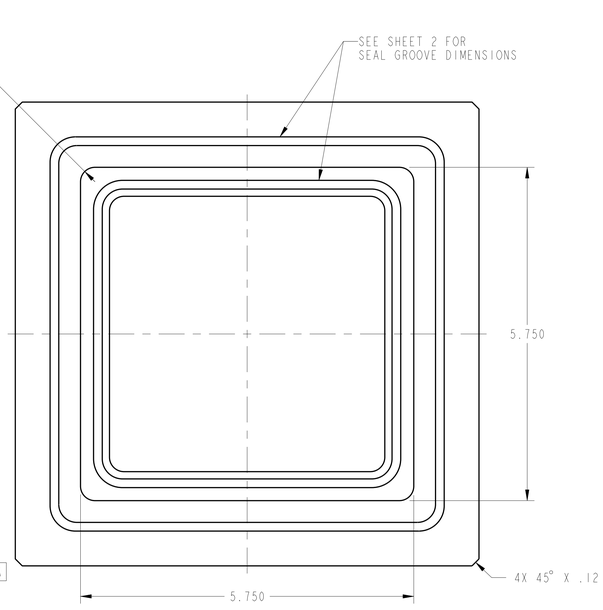

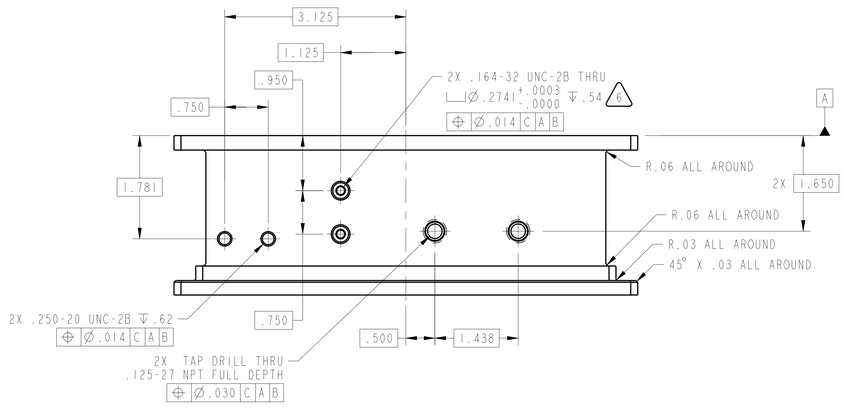

GENERAL NOTES

1. MATERIAL: INCONEL 718 ANNEALED PER AMS 5662 OR EQUIVALENT
2. 125 Ra ALL OVER PER ANSI/ASME B46.1.
3. ALL DIMENSIONS APPLY AFTER HEAT TREAT.
4. MATERIAL CERTIFICATE OF CONFORMANCE, HEAT TREAT FURNACE CHARTS/CERTIFICATIONS AND FULL INSPECTION REPORT REQUIRED.
5. HEAT TREAT MACHINED PART AS FOLLOWS:

   A) SOLUTION TREAT (ARGON FURNACE) - RAMP UP TO 1750°F FOR 1 HOUR PER INCH OF THICKNESS BUT 10 MINUTE MINIMUM, AIR COOL.

   B) PRECIPITATION HARDENING- RAMP UP TO 1325°F FOR 8 HOURS, FURNACE COOL TO 1150°F AND HOLD FOR 10 HRS, AIR COOL AFTERWARDS.

6. EACH HOLE DIAMETER TO BE MEASURED AND DOCUMENTED. A .0009 MAX./.0003 MIN. INTERFERENCE FIT MUST EXIST BETWEEN EACH GEBR1013 SEAL PIN AND EACH AS MACHINED MAIN HOUSING HOLE. EACH GEBR1013 SEAL PIN WILL MACHINED AS NEEDED TO OBTAIN PREVIOUSLY SPECIFIED INTERFERENCE. SEE DRAWING GEBR1013 FOR ADDITIONAL INFORMATION.
7. MARK PART WITH IDENTIFICATION NUMBER IN POSITION SHOWN BY LASER PER SAE-AS478-15B2, AFTER HEAT TREATMENT. THE PART IDENTIFICATION NUMBER SHALL BE THE DRAWING NUMBER, A DASH, A SERIAL NUMBER AND THE DRAWING REVISION. FABRICATOR TO SERIALIZE PARTS DURING MANUFACTURE. SERIAL NUMBER(S) WILL BE PROVIDED BY GESS3.
   EXAMPLE: BR1003-001 REV -

CHG	ZONE	DESCRIPTION	APP/DATE
A	-	RETITLED	JJM 11-04-13

REVISIONS

PRIOR TO USE VERIFY THE INTENDED PURPOSE IN PDM ("FOR" ATTRIBUTE)

UNLESS OTHERWISE SPECIFIED DIMENSIONS ARE IN INCHES

CONTRACT NNC12BA01B

CONTRACTOR GESS3 TEAM

TASK ORDER 264

TOLERANCE ON	
.X	± 0.1
.XX	± 0.01
.XXX	± 0.005
FRACTION	± -
ANGULAR	± 0.50°
BREAK EDGES	.02 MAX

DIMENSIONING AND TOLERANCING PER ASME Y14.5M-1994

DRAFTER	J. ASSION
ENGINEER	J. MAYER
DESIGNER	J. MAYER

NATIONAL AERONAUTICS AND SPACE ADMINISTRATION
JOHN H. GLENN RESEARCH CENTER
LEWIS FIELD
CLEVELAND, OHIO

MAIN HOUSING SUB-ASSEMBLY

BR1034

1003 MAIN HOUSING

PDM REL LEVEL: PDM REVISION:

PDM DATABASE:
MODEL NAME: BR1003

CHECK FOR ANY OUTSTANDING ECO'S PRIOR TO USE

SIZE	DRAWING NUMBER	REV	BLDG	AREA
E	BR1003	A	34	121

UNITS: INCH

SCALE:	INITIAL REL DATE	SHEET	DISCIPLINE
1/1	10-18-2013	1 OF 3	MECHANICAL

PRO/E VERSION: Wildfire 5.0

SIZE E DRAWING NUMBER BR1003 REV A

NAME:JASSION OBJECT:BR1003_1 DATE:Mon 10 18:08

SHEET 2 NOTES

1. SEE SHEET 1 FOR GENERAL NOTES.

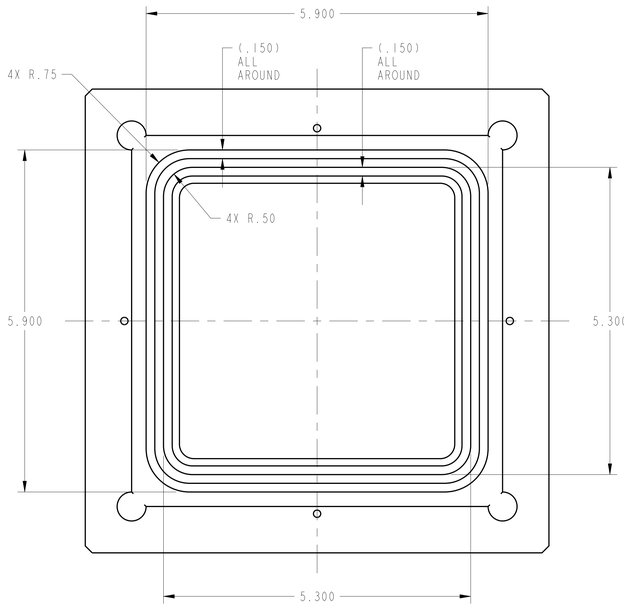

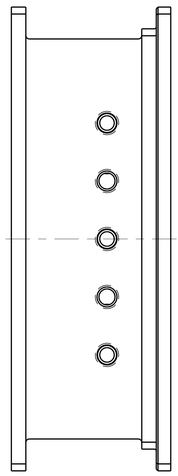

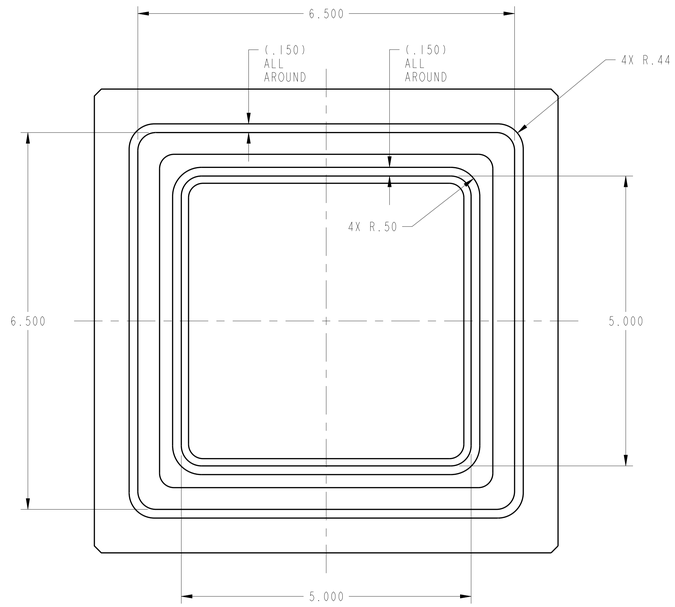

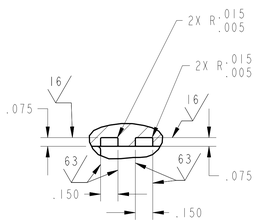

DETAIL A
TYPICAL ALL AROUND
SCALE 2/1

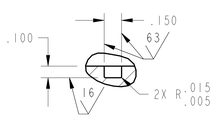

DETAIL B
TYPICAL ALL AROUND
SCALE 2/1

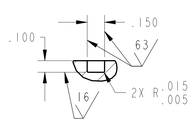

DETAIL C
TYPICAL ALL AROUND
SCALE 2/1

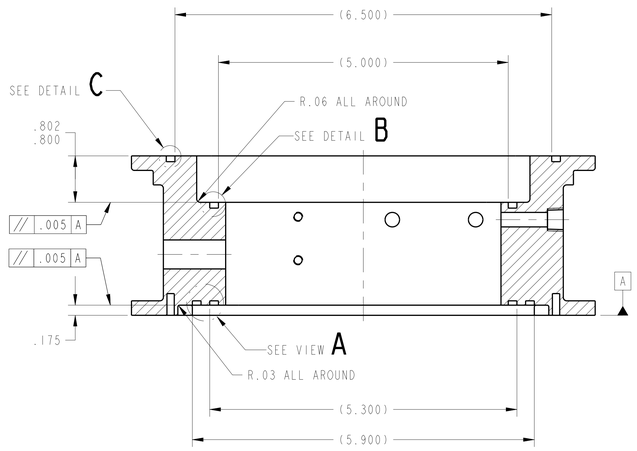

SECTION B-B

CHG	ZONE	DESCRIPTION	APP/DATE
REVISIONS			

SIZE	DRAWING NUMBER	REV	BLDG	AREA
E	BR1003	A	34	121
			UNITS: INCH	
SCALE: 1/1	INITIAL REL DATE 10-18-2013	SHEET 2 OF 3	DISCIPLINE MECHANICAL	

PRO/E VERSION: Wildfire 5.0

SIZE E DRAWING NUMBER BR1003 REV A

NAME:MARKOM OBJECT:0010002_3 DATE:05-Feb-13 10:12:47

DRAWING LIST

DRAWING NUMBER: DRAWING CODE	DRAWING NUMBER: BALLOON NO	DESCRIPTION	QTY/ ASSY
BR1003		MAIN HOUSING	1
BR1013		PIN	4

2

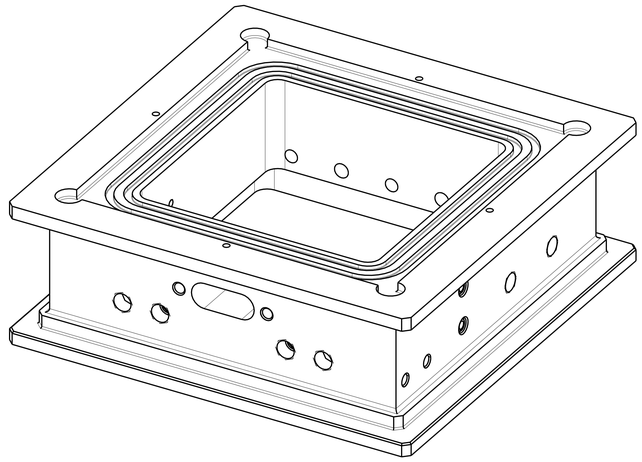

SHEET 3 NOTES

1. INSTALL PINS ITEM 1013 AFTER HEAT TREATMENT.
2. APPLY COAT OF LIGHT OIL TO PINS ITEM 1013 PRIOR TO PRESS INSTALLATION OF PINS. PINS MUST BE INSTALLED FLUSH OR BELOW MAIN HOUSING 1003 SURFACES.

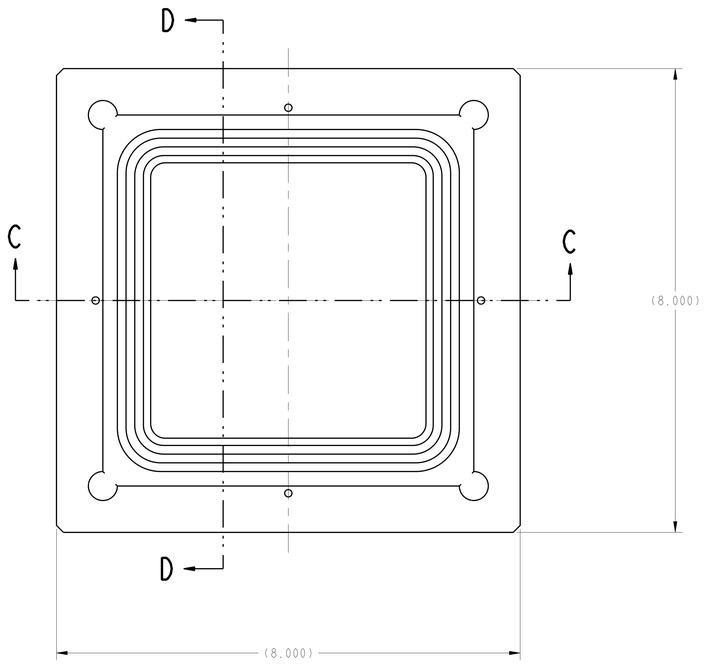

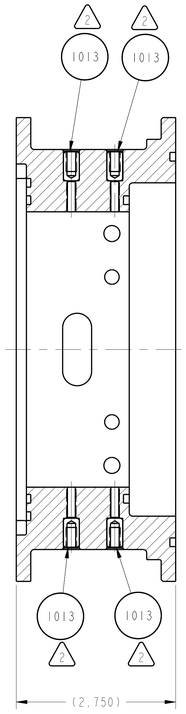

SECTION D-D

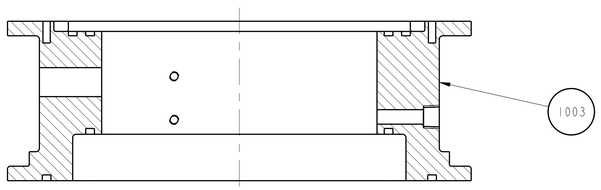

SECTION C-C

CHG	ZONE	DESCRIPTION	APP/DATE
REVISIONS			

SIZE	DRAWING NUMBER	REV	BLDG	AREA
E	BR1003	A	34	121
			UNITS: INCH	
SCALE: 1/1	INITIAL REL DATE 10-18-2013	SHEET 3 OF 3	DISCIPLINE MECHANICAL	

PRO/E VERSION: Wildfire 5.0

REV A

SIZE E DRAWING NUMBER BR1003

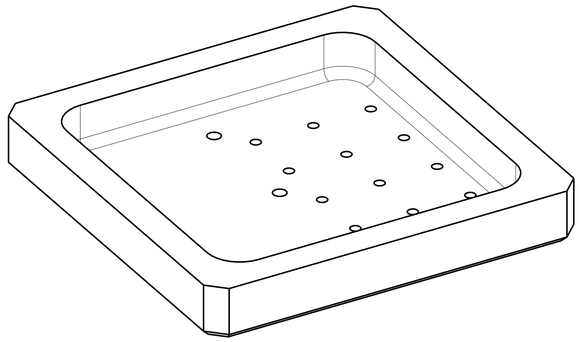

GENERAL NOTES

1. MATERIAL: INCONEL 718 ANNEALED PER AMS 5662 OR EQUIVALENT
2. 125 Ra ALL OVER PER ANSI/ASME B46.1.
3. ALL DIMENSIONS APPLY AFTER HEAT TREAT.
4. MATERIAL CERTIFICATE OF CONFORMANCE, HEAT TREAT FURNACE CHARTS/CERTIFICATIONS AND FULL INSPECTION REPORT REQUIRED.
5. HEAT TREAT MACHINED PART AS FOLLOWS:

   A) SOLUTION TREAT (ARGON FURNACE) - RAMP UP TO 1750°F FOR 1 HOUR PER INCH OF THICKNESS BUT 10 MINUTE MINIMUM, AIR COOL.

   B) PRECIPITATION HARDENING- RAMP UP TO 1325°F FOR 8 HOURS, FURNACE COOL TO 1150°F AND HOLD FOR 10 HRS, AIR COOL AFTERWARDS.

6. MARK PART WITH IDENTIFICATION NUMBER IN POSITION SHOWN BY LASER PER SAE-AS478-15B2, AFTER HEAT TREATMENT. THE PART IDENTIFICATION NUMBER SHALL BE THE DRAWING NUMBER, A DASH, A SERIAL NUMBER AND THE DRAWING REVISION. FABRICATOR TO SERIALIZE PARTS DURING MANUFACTURE. SERIAL NUMBER(S) WILL BE PROVIDED BY GESS3.
   EXAMPLE: BR1005-001 REV -

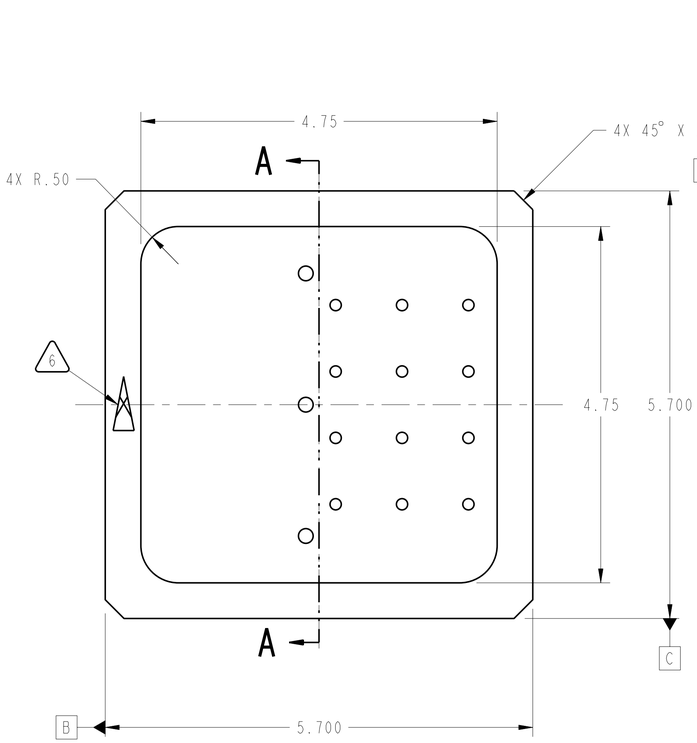

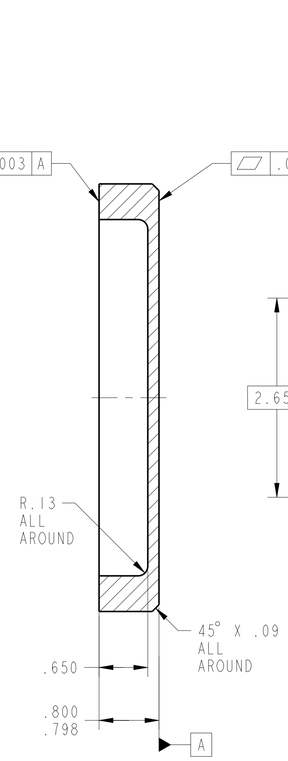

SECTION A-A

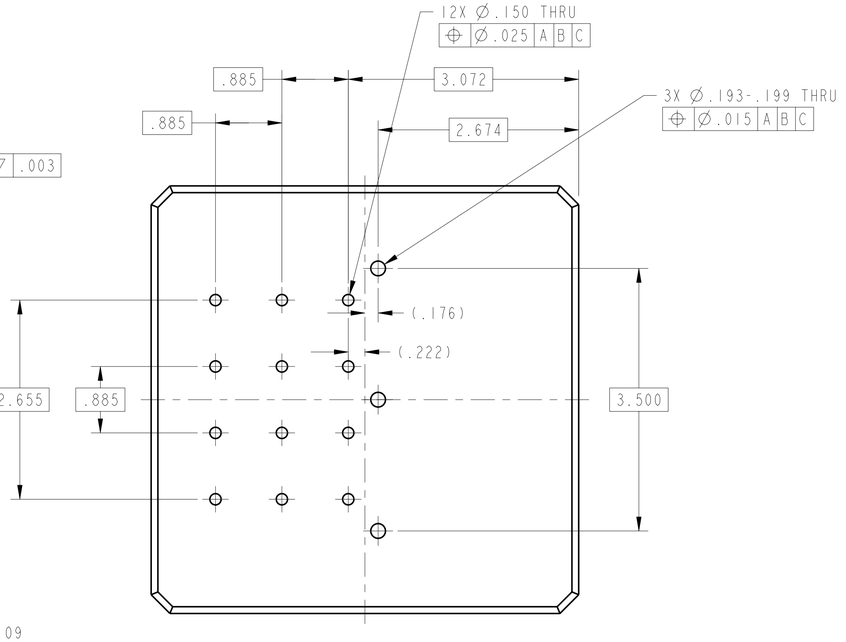

A	-	RETITLED	JJM 11-04-13
CHG	ZONE	DESCRIPTION	APP/DATE

REVISIONS

PRIOR TO USE VERIFY THE INTENDED PURPOSE IN PDM ("FOR" ATTRIBUTE)

UNLESS OTHERWISE SPECIFIED DIMENSIONS ARE IN INCHES

TOLERANCE ON

X	± 0.1
.XX	± 0.01
.XXX	± 0.005
FRACTION	± -
ANGULAR	± 0.50°
BREAK EDGES	.02 MAX

CONTRACT NNC12BA01B
CONTRACTOR GESS3 TEAM
TASK ORDER 264
DRAFTER J. ASSION
ENGINEER J. MAYER
DESIGNER J. MAYER

DIMENSIONING AND TOLERANCING PER ASME Y14.5M-1994

PDM REL LEVEL: PDM REVISION:
PDM DATABASE:
MODEL NAME: BR1005
CHECK FOR ANY OUTSTANDING ECO'S PRIOR TO USE

NATIONAL AERONAUTICS AND SPACE ADMINISTRATION
JOHN H. GLENN RESEARCH CENTER
LEWIS FIELD
CLEVELAND, OHIO

BURN RIG TEST ASSEMBLY #1

BR1001

1005 PLATE #1

SIZE	DRAWING NUMBER	REV	BLDG	AREA
D	BR1005	A	34	121

UNITS: INCH

SCALE:	INITIAL REL DATE	SHEET	DISCIPLINE
1/1	10-18-2013	1 OF 1	MECHANICAL

PRO/E VERSION: Wildfire 5.0

SIZE D DRAWING NUMBER BR1005 REV A

NAME:JASSION OBJECT:BR1005 DATE:04-Nov-13 16:14:11

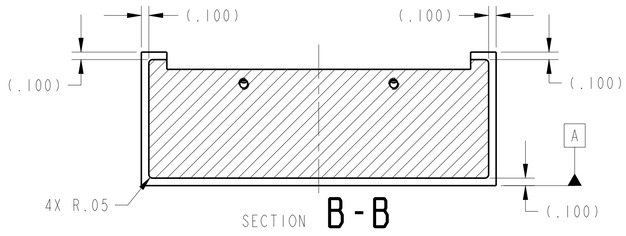

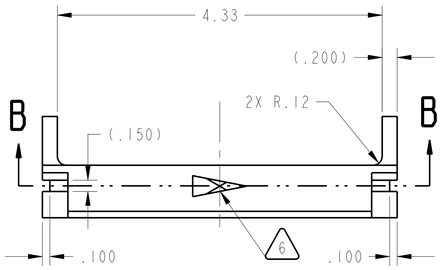

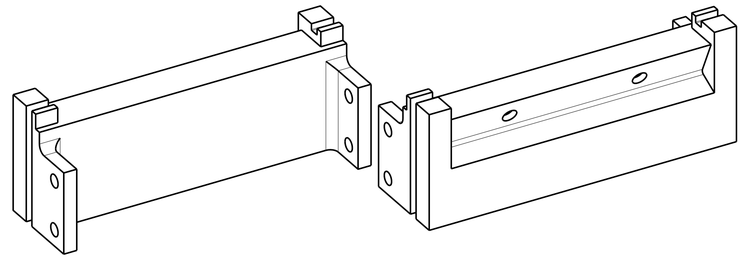

GENERAL NOTES

1. MATERIAL: INCONEL 718 ANNEALED PER AMS 5662 OR EQUIVALENT
2. 125 Ra ALL OVER PER ANSI/ASME B46.1.
3. ALL DIMENSIONS APPLY AFTER HEAT TREAT.
4. MATERIAL CERTIFICATE OF CONFORMANCE, HEAT TREAT FURNACE CHARTS/CERTIFICATIONS AND FULL INSPECTION REPORT REQUIRED.
5. HEAT TREAT MACHINED PART AS FOLLOWS:

   A) SOLUTION TREAT (ARGON FURNACE) - RAMP UP TO 1750°F FOR 1 HOUR PER INCH OF THICKNESS BUT 10 MINUTE MINIMUM, AIR COOL.

   B) PRECIPITATION HARDENING- RAMP UP TO 1325°F FOR 8 HOURS, FURNACE COOL TO 1150°F AND HOLD FOR 10 HRS, AIR COOL AFTERWARDS.

6. MARK PART WITH IDENTIFICATION NUMBER IN POSITION SHOWN BY LASER PER SAE-AS478-15B2, AFTER HEAT TREATMENT. THE PART IDENTIFICATION NUMBER SHALL BE THE DRAWING NUMBER, A DASH, A SERIAL NUMBER AND THE DRAWING REVISION. FABRICATOR TO SERIALIZE PARTS DURING MANUFACTURE. SERIAL NUMBER(S) WILL BE PROVIDED BY GESS3.
   EXAMPLE: BR1007-001 REV -

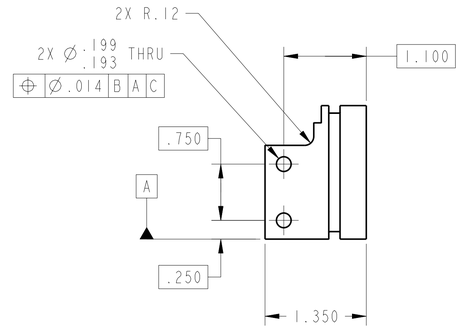

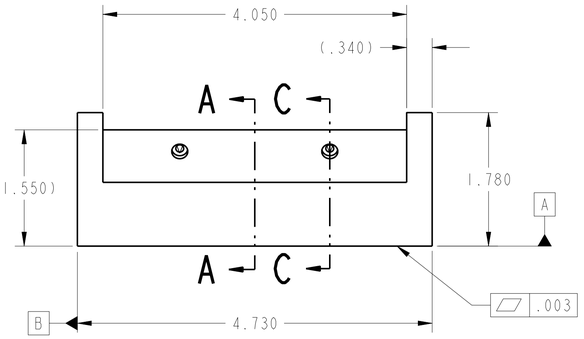

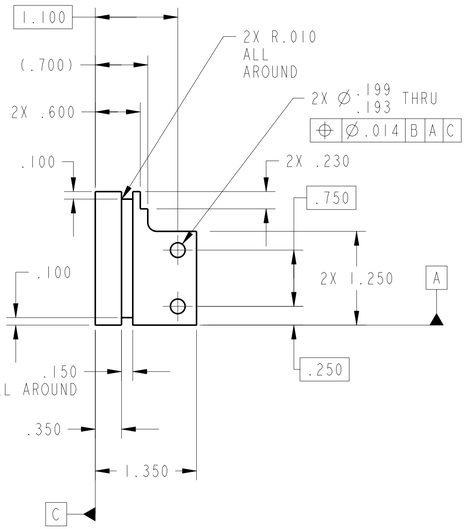

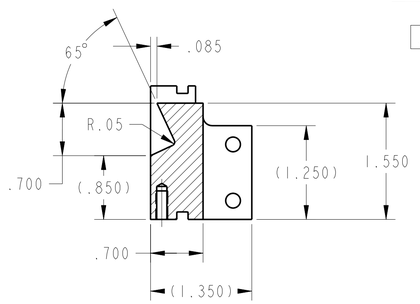

SECTION A-A

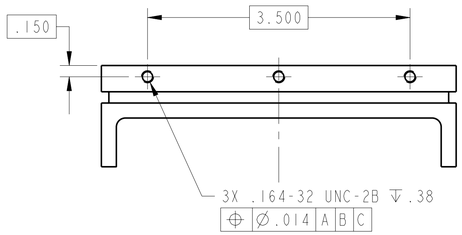

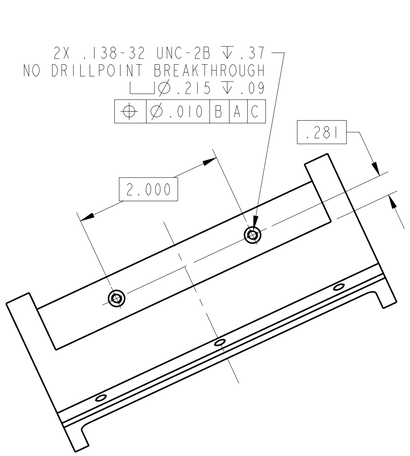

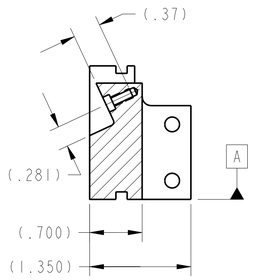

SECTION C-C

CHG	ZONE	DESCRIPTION	APP/DATE
A	-	RETITLED AND NEXT ASSEMBLY UPDATED	JJM 11-04-13

REVISIONS

PRIOR TO USE VERIFY THE INTENDED PURPOSE IN PDM ("FOR" ATTRIBUTE)

UNLESS OTHERWISE SPECIFIED DIMENSIONS ARE IN INCHES

TOLERANCE ON

.X	± 0.1
.XX	± 0.01
.XXX	± 0.005
FRACTION	± -
ANGULAR	± 0.50°
BREAK EDGES	.02 MAX

CONTRACT NNC12BA01B
CONTRACTOR GESS3 TEAM
TASK ORDER 264
DRAFTER J. ASSION
ENGINEER J. MAYER
DESIGNER J. ASSION

DIMENSIONING AND TOLERANCING PER ASME Y14.5M-1994

PDM REL LEVEL: PDM REVISION:
PDM DATABASE:
MODEL NAME: BR1007
CHECK FOR ANY OUTSTANDING ECO'S PRIOR TO USE

NATIONAL AERONAUTICS AND SPACE ADMINISTRATION
JOHN H. GLENN RESEARCH CENTER
LEWIS FIELD
CLEVELAND, OHIO

TEST ASSEMBLY

BR1006

1007 MOUNTING ADAPTER

SIZE	DRAWING NUMBER	REV	BLDG	AREA
D	BR1007	A	34	121

UNITS: INCH

SCALE:	INITIAL REL DATE	SHEET	DISCIPLINE
1/1	10-18-2013	1 OF 1	MECHANICAL

PRO/E VERSION: Wildfire 5.0

SIZE D | DRAWING NUMBER BR1007 | REV A

NAME:JABSON OBJECT:BR1007 DATE:08-Nov-13 16:13:32

GENERAL NOTES

1. MATERIAL: HAYNES HS188 PER AMS 5608.

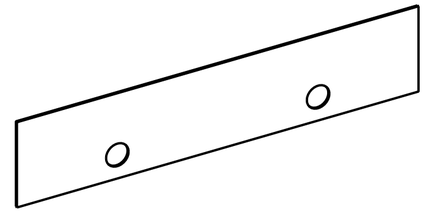

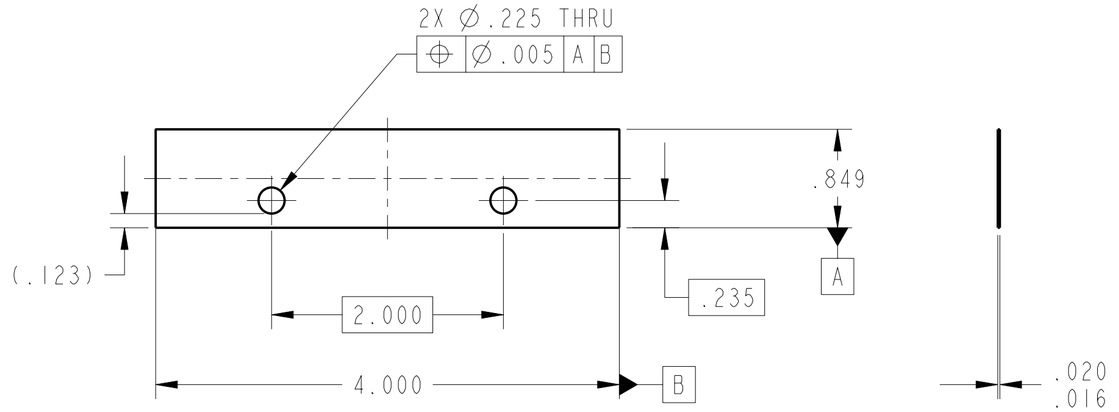

CHG	ZONE	DESCRIPTION	APP/DATE
A	-	RETITLED AND NEXT ASSEMBLY UPDATED	JJM 11-04-13

REVISIONS

PRIOR TO USE VERIFY THE INTENDED PURPOSE IN PDM ("FOR" ATTRIBUTE)

UNLESS OTHERWISE SPECIFIED DIMENSIONS ARE IN INCHES

CONTRACT NNC12BA01B

CONTRACTOR GESS3 TEAM

TOLERANCE ON	
.X	± 0.1
.XX	± 0.01
.XXX	± 0.005
FRACTION	± -
ANGULAR	± 0.50°
BREAK EDGES	.02 MAX

TASK ORDER	264
DRAFTER	J. ASSION
ENGINEER	J. MAYER
DESIGNER	J. MAYER

DIMENSIONING AND TOLERANCING PER ASME Y14.5M-1994

PDM REL LEVEL: PDM REVISION:

PDM DATABASE:

MODEL NAME: BR1008

CHECK FOR ANY OUTSTANDING ECO'S PRIOR TO USE

NATIONAL AERONAUTICS AND SPACE ADMINISTRATION
JOHN H. GLENN RESEARCH CENTER
LEWIS FIELD
CLEVELAND, OHIO

TEST ASSEMBLY

BR1006 A

1008 SHIM #1

SIZE	DRAWING NUMBER	REV	BLDG	AREA
C	BR1008	A	34	121

UNITS: INCH

SCALE:	INITIAL REL DATE	SHEET	DISCIPLINE
1/1	10-18-2013	1 OF 1	MECHANICAL

PRO/E VERSION: Wildfire 5.0

SIZE C DRAWING NUMBER BR1008 REV A

NAME:JASSION OBJECT:BR1008 DATE:06-Nov-13 10:13:47

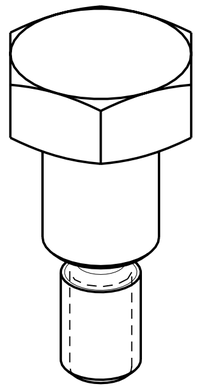

GENERAL NOTES

1. MATERIAL: INCONEL 718 ANNEALED PER AMS 5662 OR EQUIVALENT

2. 125 Ra ALL OVER PER ANSI/ASME B46.1.

3. ALL DIMENSIONS APPLY AFTER HEAT TREAT.

4. MATERIAL CERTIFICATE OF CONFORMANCE, HEAT TREAT FURNACE CHARTS/CERTIFICATIONS AND FULL INSPECTION REPORT REQUIRED.

5. HEAT TREAT MACHINED PART AS FOLLOWS:

   A) SOLUTION TREAT (ARGON FURNACE) - RAMP UP TO 1750°F FOR 1 HOUR PER INCH OF THICKNESS BUT 10 MINUTE MINIMUM, AIR COOL.

   B) PRECIPITATION HARDENING- RAMP UP TO 1325°F FOR 8 HOURS, FURNACE COOL TO 1150°F AND HOLD FOR 10 HRS, AIR COOL AFTERWARDS.

6. BAG, SEAL AND TAG PART PER SAE-AS478-35D.MARK ATTACHED TAG WITH IDENTIFICATION NUMBER. THE PART IDENTIFICATION NUMBER SHALL BE THE DRAWING NUMBER, A DASH, A SERIAL NUMBER AND THE DRAWING REVISION. FABRICATOR TO SERIALIZE PARTS DURING MANUFACTURE. SERIAL NUMBER(S) WILL BE PROVIDED BY GESS3.
   EXAMPLE: BR1009-001 REV -

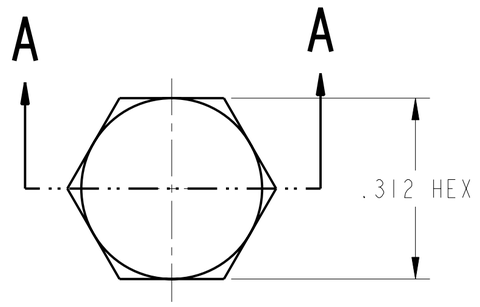

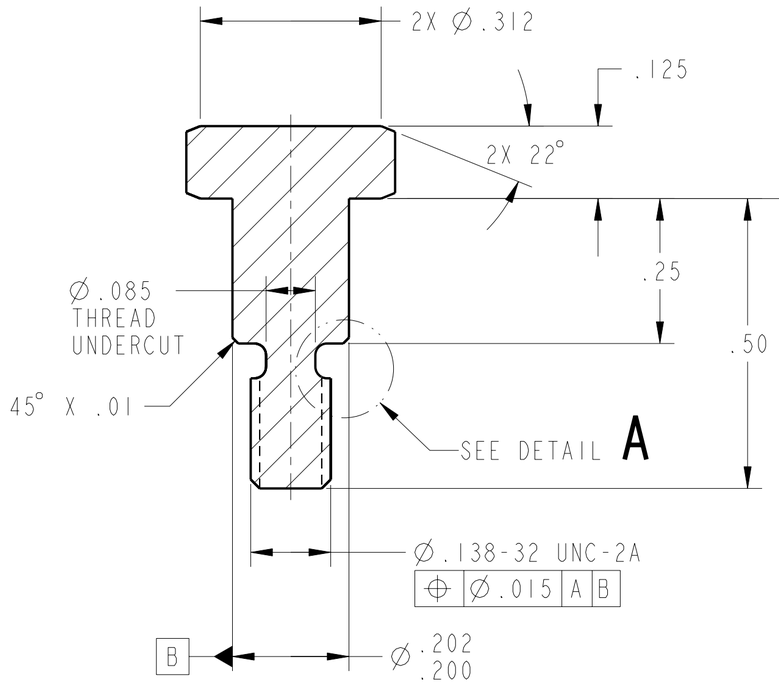

SECTION **A-A**

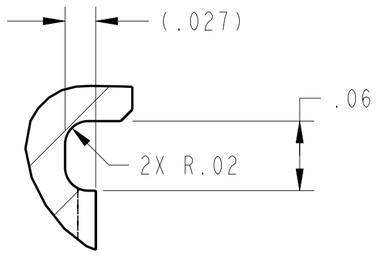

DETAIL **A**
SCALE 10/1

CHG	ZONE	DESCRIPTION	APP/DATE
A	-	RETITLED AND NEXT ASSEMBLY UPDATED	JJM 11-04-13

REVISIONS

PRIOR TO USE VERIFY THE INTENDED PURPOSE IN PDM ("FOR" ATTRIBUTE)

UNLESS OTHERWISE SPECIFIED DIMENSIONS ARE IN INCHES		CONTRACT NNC12BA01B CONTRACTOR GESS3 TEAM	
TOLERANCE ON		TASK ORDER	264
.X	± 0.1	DRAFTER	J. ASSION
.XX	± 0.01	ENGINEER	J. MAYER
.XXX	± 0.005	DESIGNER	J. MAYER
FRACTION	± -	DIMENSIONING AND TOLERANCING PER ASME Y14.5M-1994	
ANGULAR	± 0.50°		
BREAK EDGES	.02 MAX		

PDM REL LEVEL: PDM REVISION:
PDM DATABASE:
MODEL NAME: BR1009
CHECK FOR ANY OUTSTANDING ECO'S PRIOR TO USE

NATIONAL AERONAUTICS AND SPACE ADMINISTRATION
JOHN H. GLENN RESEARCH CENTER
LEWIS FIELD
CLEVELAND, OHIO

TEST ASSEMBLY

BR1006

1009 SHOULDER SCREW

SIZE	DRAWING NUMBER	REV	BLDG	AREA
C	BR1009	A	34	121

UNITS: INCH

SCALE:	INITIAL REL DATE	SHEET	DISCIPLINE
5/1	10-18-2013	1 OF 1	MECHANICAL

PRO/E VERSION: Wildfire 5.0

SIZE C | DRAWING NUMBER BR1009 | REV A

NAME:JASSION OBJECT:BR1009 DATE:05-Nov-13 10:13:59

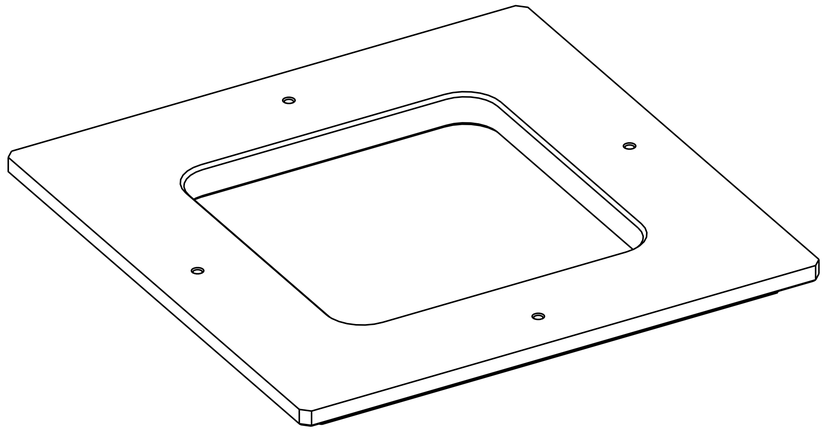

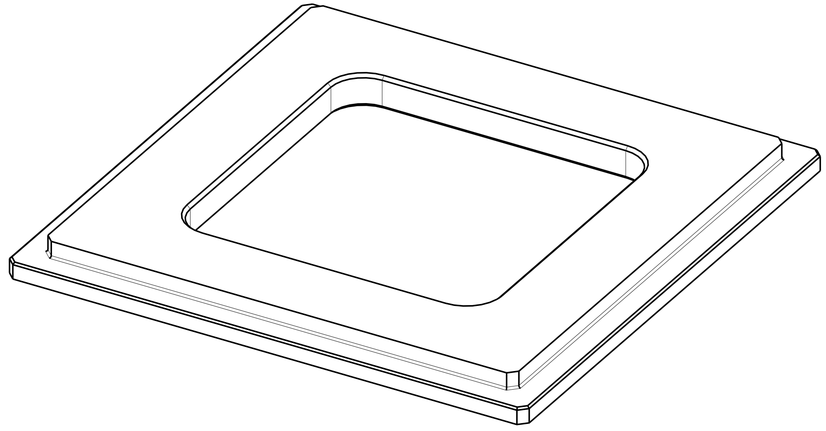

GENERAL NOTES

1. MATERIAL: INCONEL 718 ANNEALED PER AMS 5662 OR EQUIVALENT
2. 125 Ra ALL OVER PER ANSI/ASME B46.1.
3. ALL DIMENSIONS APPLY AFTER HEAT TREAT.
4. MATERIAL CERTIFICATE OF CONFORMANCE, HEAT TREAT FURNACE CHARTS/CERTIFICATIONS AND FULL INSPECTION REPORT REQUIRED.
5. HEAT TREAT MACHINED PART AS FOLLOWS:

   A) SOLUTION TREAT (ARGON FURNACE) - RAMP UP TO 1750°F FOR 1 HOUR PER INCH OF THICKNESS BUT 10 MINUTE MINIMUM, AIR COOL.

   B) PRECIPITATION HARDENING- RAMP UP TO 1325°F FOR 8 HOURS, FURNACE COOL TO 1150°F AND HOLD FOR 10 HRS, AIR COOL AFTERWARDS.

6. MARK PART WITH IDENTIFICATION NUMBER IN POSITION SHOWN BY LASER PER SAE-AS478-15B2, AFTER HEAT TREATMENT. THE PART IDENTIFICATION NUMBER SHALL BE THE DRAWING NUMBER, A DASH, A SERIAL NUMBER AND THE DRAWING REVISION. FABRICATOR TO SERIALIZE PARTS DURING MANUFACTURE. SERIAL NUMBER(S) WILL BE PROVIDED BY GESS3.
   EXAMPLE: BR1010-001 REV -

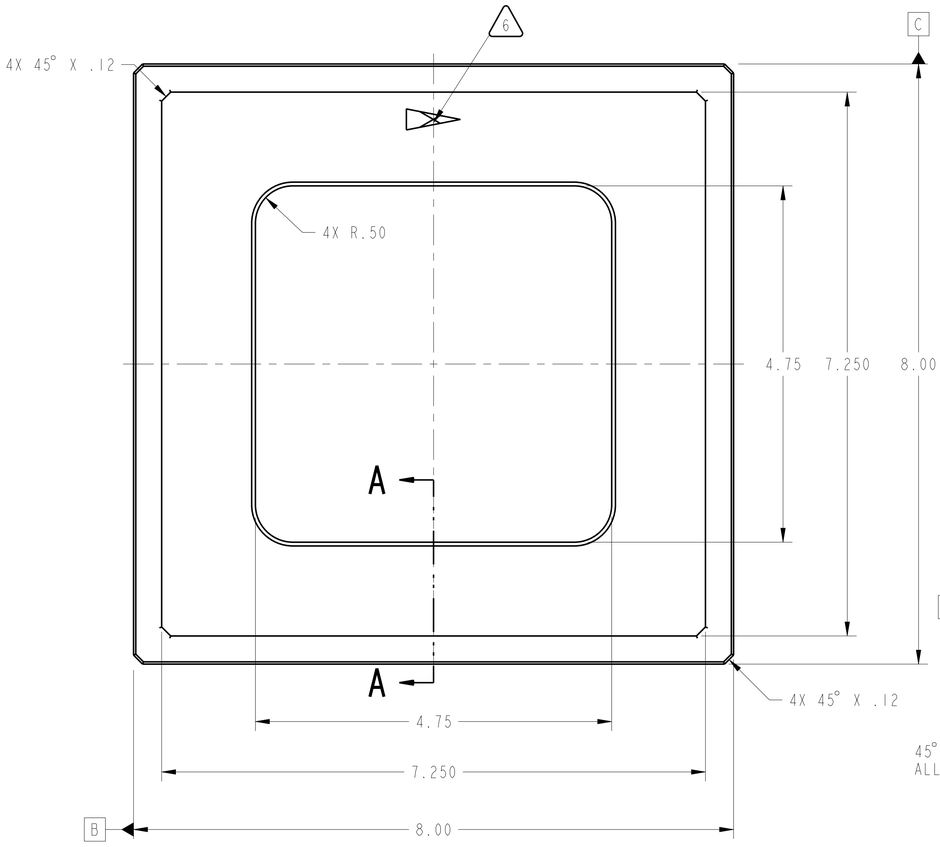

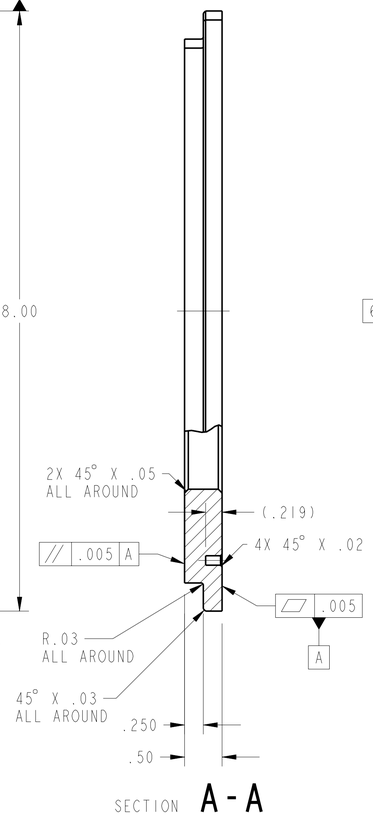

SECTION A-A

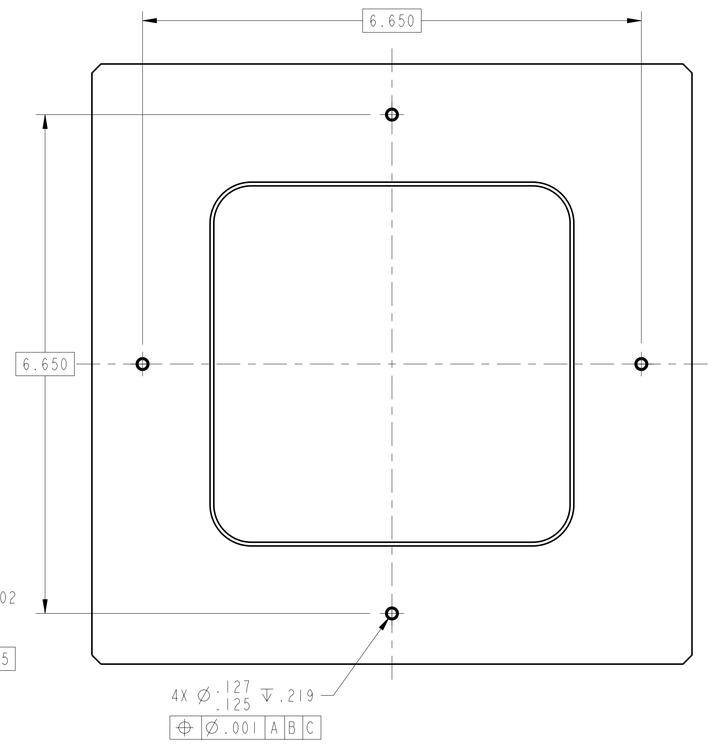

CHG	ZONE	DESCRIPTION	APP/DATE
A	-	RETITLED	JJM 11-04-13

REVISIONS

PRIOR TO USE VERIFY THE INTENDED PURPOSE IN PDM ("FOR" ATTRIBUTE)

UNLESS OTHERWISE SPECIFIED DIMENSIONS ARE IN INCHES

TOLERANCE ON

.X	± 0.1
.XX	± 0.01
.XXX	± 0.005
FRACTION	± -
ANGULAR	± 0.50°
BREAK EDGES	.02 MAX

CONTRACT NNC12BA01B
CONTRACTOR GESS3 TEAM
TASK ORDER 264
DRAFTER J. ASSION
ENGINEER J. MAYER
DESIGNER J. MAYER

DIMENSIONING AND TOLERANCING PER ASME Y14.5M-1994

PDM REL LEVEL:
PDM REVISION:
PDM DATABASE:
MODEL NAME: BR1010
CHECK FOR ANY OUTSTANDING ECO'S PRIOR TO USE

NATIONAL AERONAUTICS AND SPACE ADMINISTRATION
JOHN H. GLENN RESEARCH CENTER
LEWIS FIELD
CLEVELAND, OHIO

MAIN HOUSING SUB-ASSEMBLY

BR1034

1010 HOUSING TOP PLATE

SIZE	DRAWING NUMBER	REV	BLDG	AREA
D	BR1010	A	34	121

UNITS: INCH

SCALE:	INITIAL REL DATE	SHEET	DISCIPLINE
1/1	10-18-2013	1 OF 1	MECHANICAL

PRO/E VERSION: Wildfire 5.0

SIZE D | DRAWING NUMBER BR1010 | REV A

NAME:JASSION OBJECT:BR1010 DATE:05-Nov-13 08:30:43

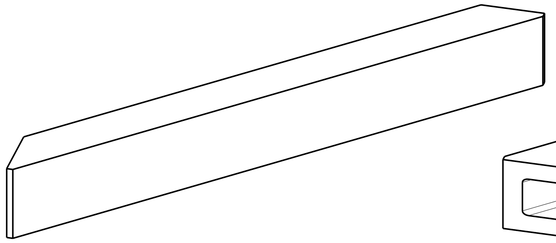

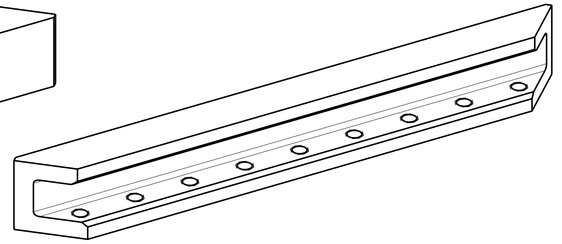

GENERAL NOTES

1. MATERIAL: INCONEL 718 ANNEALED PER AMS 5662 OR EQUIVALENT

2. 125 Ra ALL OVER PER ANSI/ASME B46.1.

3. ALL DIMENSIONS APPLY AFTER HEAT TREAT.

4. MATERIAL CERTIFICATE OF CONFORMANCE, HEAT TREAT FURNACE CHARTS/CERTIFICATIONS AND FULL INSPECTION REPORT REQUIRED.

5. HEAT TREAT MACHINED PART AS FOLLOWS:

   A) SOLUTION TREAT (ARGON FURNACE) - RAMP UP TO 1750°F FOR 1 HOUR PER INCH OF THICKNESS BUT 10 MINUTE MINIMUM, AIR COOL.

   B) PRECIPITATION HARDENING- RAMP UP TO 1325°F FOR 8 HOURS, FURNACE COOL TO 1150°F AND HOLD FOR 10 HRS, AIR COOL AFTERWARDS.

△6. MARK PART WITH IDENTIFICATION NUMBER IN POSITION SHOWN BY LASER PER SAE-AS478-15B2, AFTER HEAT TREATMENT. THE PART IDENTIFICATION NUMBER SHALL BE THE DRAWING NUMBER, A DASH, A SERIAL NUMBER AND THE DRAWING REVISION. FABRICATOR TO SERIALIZE PARTS DURING MANUFACTURE. SERIAL NUMBER(S) WILL BE PROVIDED BY GESS3.
EXAMPLE: BR1011-001 REV -

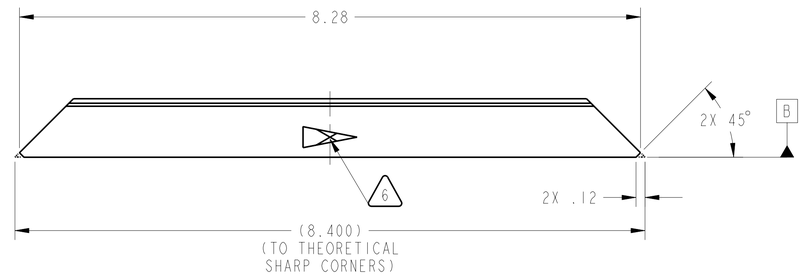

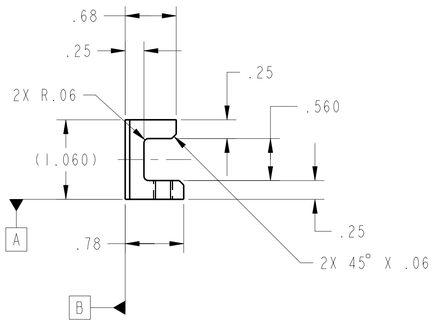

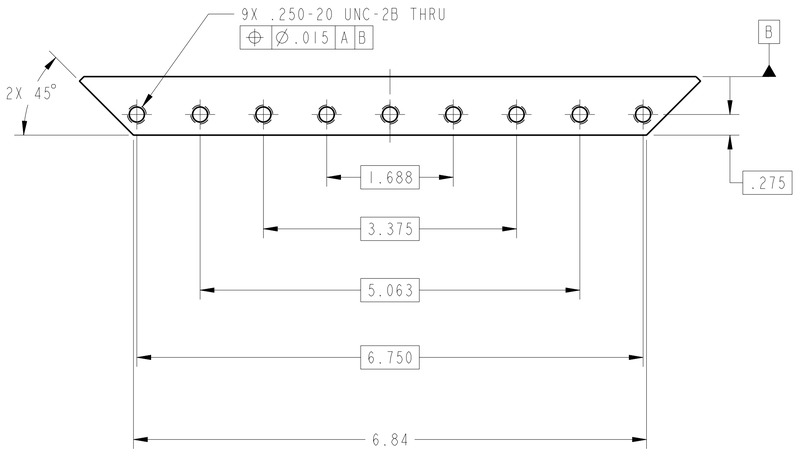

CHG	ZONE	DESCRIPTION	APP/DATE
A	-	RETITLED	JJM 11-04-13

REVISIONS

PRIOR TO USE VERIFY THE INTENDED PURPOSE IN PDM ("FOR" ATTRIBUTE)

UNLESS OTHERWISE SPECIFIED DIMENSIONS ARE IN INCHES		CONTRACT	NNC12BA01B
		CONTRACTOR	GESS3 TEAM
TOLERANCE ON		TASK ORDER	264
.X	± 0.1	DRAFTER	J. ASSION
.XX	± 0.01	ENGINEER	J. MAYER
.XXX	± 0.005	DESIGNER	J. MAYER
FRACTION	± -	DIMENSIONING AND TOLERANCING PER ASME Y14.5M-1994	
ANGULAR	± 0.50°		
BREAK EDGES	.02 MAX		

PDM REL LEVEL: PDM REVISION:
PDM DATABASE:
MODEL NAME: BR1011
CHECK FOR ANY OUTSTANDING ECO'S PRIOR TO USE

NATIONAL AERONAUTICS AND SPACE ADMINISTRATION
JOHN H. GLENN RESEARCH CENTER
LEWIS FIELD
CLEVELAND, OHIO

MAIN HOUSING SUB-ASSEMBLY

BR1034

1011 HOUSING CLAMP

SIZE	DRAWING NUMBER	REV	BLDG	AREA
D	BR1011	A	34	121

UNITS: INCH

SCALE:	INITIAL REL DATE	SHEET	DISCIPLINE
1/1	10-18-2013	1 OF 1	MECHANICAL

PRO/E VERSION: Wildfire 5.0

SIZE D DRAWING NUMBER BR1011 REV A

NAME:JASSION OBJECT:BR1011 DATE:08-Nov-13 07:26:19

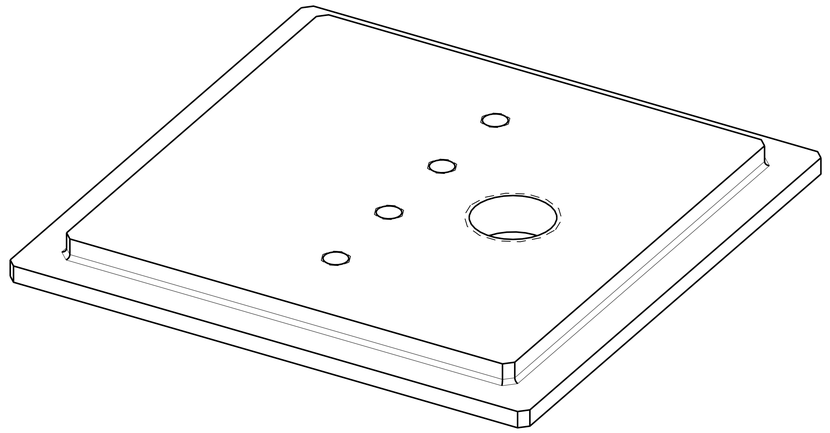

GENERAL NOTES

1. MATERIAL: INCONEL 718 ANNEALED PER AMS 5662 OR EQUIVALENT

2. 125 Ra ALL OVER PER ANSI/ASME B46.1.

3. ALL DIMENSIONS APPLY AFTER HEAT TREAT.

4. MATERIAL CERTIFICATE OF CONFORMANCE, HEAT TREAT FURNACE CHARTS/CERTIFICATIONS AND FULL INSPECTION REPORT REQUIRED.

5. HEAT TREAT MACHINED PART AS FOLLOWS:

   A) SOLUTION TREAT (ARGON FURNACE) - RAMP UP TO 1750°F FOR 1 HOUR PER INCH OF THICKNESS BUT 10 MINUTE MINIMUM, AIR COOL.

   B) PRECIPITATION HARDENING- RAMP UP TO 1325°F FOR 8 HOURS, FURNACE COOL TO 1150°F AND HOLD FOR 10 HRS, AIR COOL AFTERWARDS.

6. MARK PART WITH IDENTIFICATION NUMBER IN POSITION SHOWN BY LASER PER SAE-AS478-15B2, AFTER HEAT TREATMENT. THE PART IDENTIFICATION NUMBER SHALL BE THE DRAWING NUMBER, A DASH, A SERIAL NUMBER AND THE DRAWING REVISION. FABRICATOR TO SERIALIZE PARTS DURING MANUFACTURE. SERIAL NUMBER(S) WILL BE PROVIDED BY GESS3.
   EXAMPLE: BR1012-001 REV -

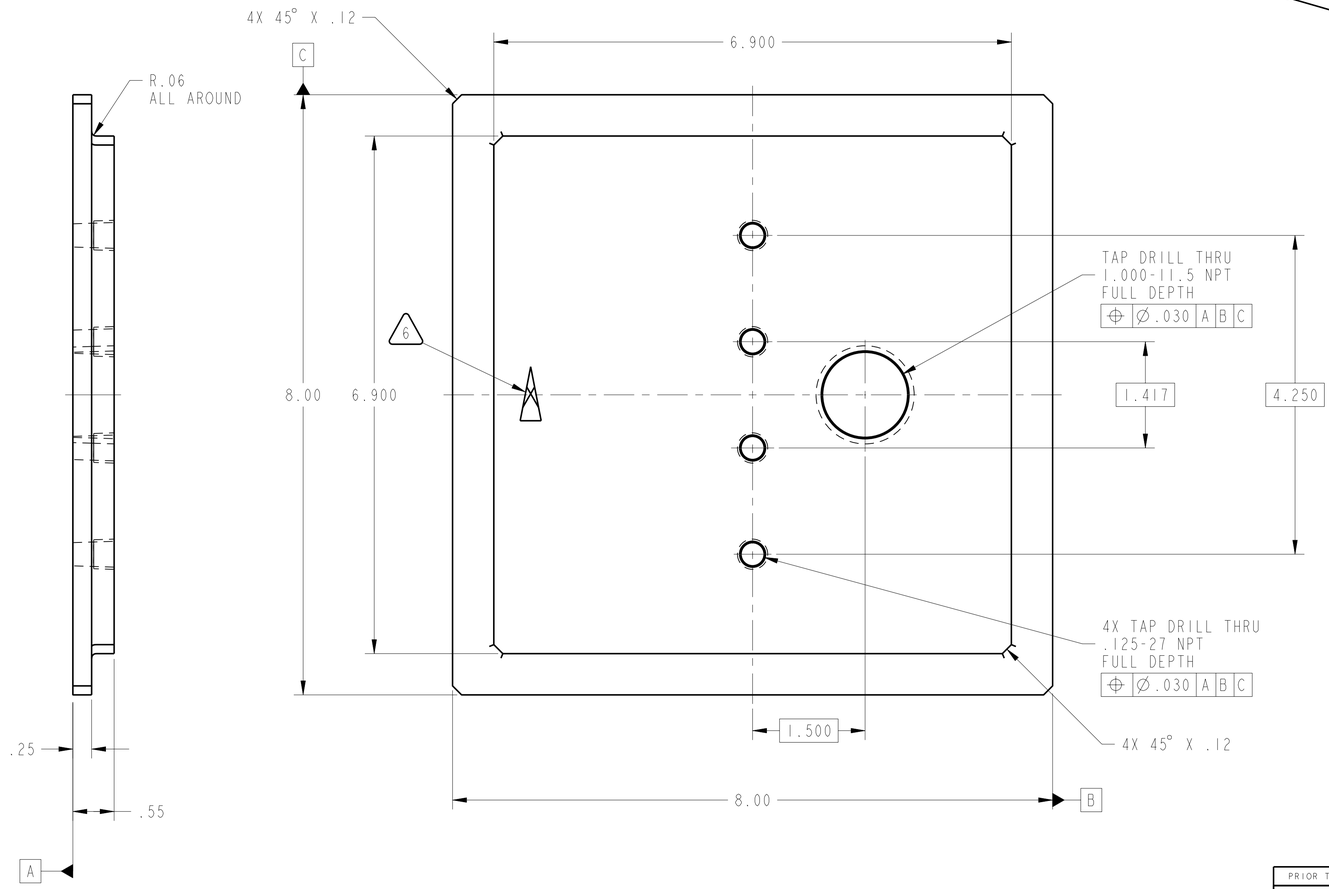

CHG	ZONE	DESCRIPTION	APP/DATE
A	-	RETITLED	JJM 11-04-13

REVISIONS

PRIOR TO USE VERIFY THE INTENDED PURPOSE IN PDM ("FOR" ATTRIBUTE)

UNLESS OTHERWISE SPECIFIED DIMENSIONS ARE IN INCHES

CONTRACT NNC12BA01B

CONTRACTOR GESS3 TEAM

TOLERANCE ON	
.X	± 0.1
.XX	± 0.01
.XXX	± 0.005
FRACTION	± -
ANGULAR	± 0.50°
BREAK EDGES	.02 MAX

TASK ORDER	264
DRAFTER	J. ASSION
ENGINEER	J. MAYER
DESIGNER	J. MAYER

DIMENSIONING AND TOLERANCING PER ASME Y14.5M-1994

PDM REL LEVEL: PDM REVISION:

PDM DATABASE:

MODEL NAME: BR1012

CHECK FOR ANY OUTSTANDING ECO'S PRIOR TO USE

NATIONAL AERONAUTICS AND SPACE ADMINISTRATION
JOHN H. GLENN RESEARCH CENTER
LEWIS FIELD
CLEVELAND, OHIO

HOUSING BOTTOM PLATE SUB-ASSEMBLY

BR1039

1012 HOUSING BOTTOM PLATE #1

SIZE	DRAWING NUMBER	REV	BLDG	AREA
D	BR1012	A	34	121

UNITS: INCH

SCALE:	INITIAL REL DATE	SHEET	DISCIPLINE
1/1	10-18-2013	1 OF 1	MECHANICAL

PRO/E VERSION: Wildfire 5.0

SIZE D DRAWING NUMBER BR1012 REV A

NAME:JABSON OBJECT:BR1012 DATE:08-Nov-13 07:30:01

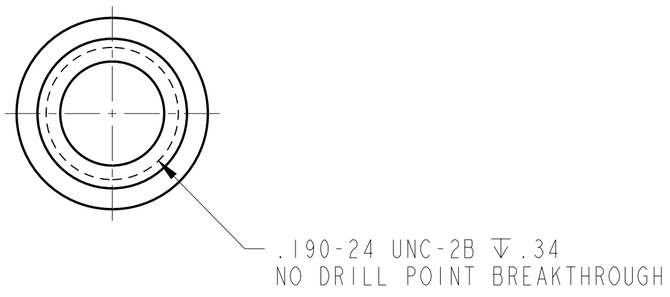

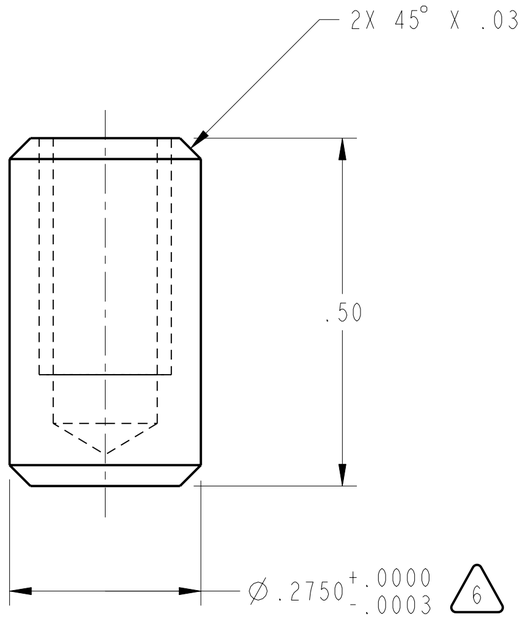

GENERAL NOTES

1. MATERIAL: INCONEL 718 ANNEALED PER AMS 5662 OR EQUIVALENT

2. 125 Ra ALL OVER PER ANSI/ASME B46.1.

3. ALL DIMENSIONS APPLY AFTER HEAT TREAT.

4. MATERIAL CERTIFICATE OF CONFORMANCE, HEAT TREAT FURNACE CHARTS/CERTIFICATIONS AND FULL INSPECTION REPORT REQUIRED.

5. HEAT TREAT MACHINED PART AS FOLLOWS:

   A) SOLUTION TREAT (ARGON FURNACE) - RAMP UP TO 1750°F FOR 1 HOUR PER INCH OF THICKNESS BUT 10 MINUTE MINIMUM, AIR COOL.

   B) PRECIPITATION HARDENING- RAMP UP TO 1325°F FOR 8 HOURS, FURNACE COOL TO 1150°F AND HOLD FOR 10 HRS, AIR COOL AFTERWARDS.

6. DIMENSION MAY BE UPDATED SO THAT A .0009 MAX./.0003 MIN. INTERFERENCE FIT IS ACHIEVED BETWEEN GEBR1013 SEAL PIN AND AS MACHINED MAIN HOUSING DRAWING NUMBER GEBR1003.

7. BAG, SEAL AND TAG PART PER SAE-AS478-35D. MARK ATTACHED TAG WITH IDENTIFICATION NUMBER. THE PART IDENTIFICATION NUMBER SHALL BE THE DRAWING NUMBER AND THE DRAWING REVISION. EXAMPLE: BR1013 REV -

CHG	ZONE	DESCRIPTION	APP/DATE
A	-	RETITLED	JJM 11-04-13

REVISIONS

PRIOR TO USE VERIFY THE INTENDED PURPOSE IN PDM ("FOR" ATTRIBUTE)

UNLESS OTHERWISE SPECIFIED DIMENSIONS ARE IN INCHES

CONTRACT NNC12BA01B

CONTRACTOR GESS3 TEAM

TOLERANCE ON	
.X	± 0.03
.XX	± 0.01
.XXX	± 0.005
FRACTION	± -
ANGULAR	± 0.50°
BREAK EDGES	.02 MAX

TASK ORDER	264
DRAFTER	J. ASSION
ENGINEER	J. MAYER
DESIGNER	J. ASSION

DIMENSIONING AND TOLERANCING PER ASME Y14.5M-1994

PDM REL LEVEL: PDM REVISION:

PDM DATABASE: NOT UNDER CONFIG MANAGEMENT

MODEL NAME: BR1013

CHECK FOR ANY OUTSTANDING ECO'S PRIOR TO USE

NATIONAL AERONAUTICS AND SPACE ADMINISTRATION
JOHN H. GLENN RESEARCH CENTER
LEWIS FIELD
CLEVELAND, OHIO

MAIN HOUSING

BR1003 A

1013 PIN

SIZE	DRAWING NUMBER	REV	BLDG	AREA
C	BR1013	A	34	121

UNITS: INCH

SCALE:	INITIAL REL DATE	SHEET	DISCIPLINE
6/1	10-18-2013	1 OF 1	MECHANICAL

PRO/E VERSION:

REV A

SIZE C DRAWING NUMBER BR1013

NAME:JASSION OBJECT:BR1013 DATE:06-Nov-13 07:07:45

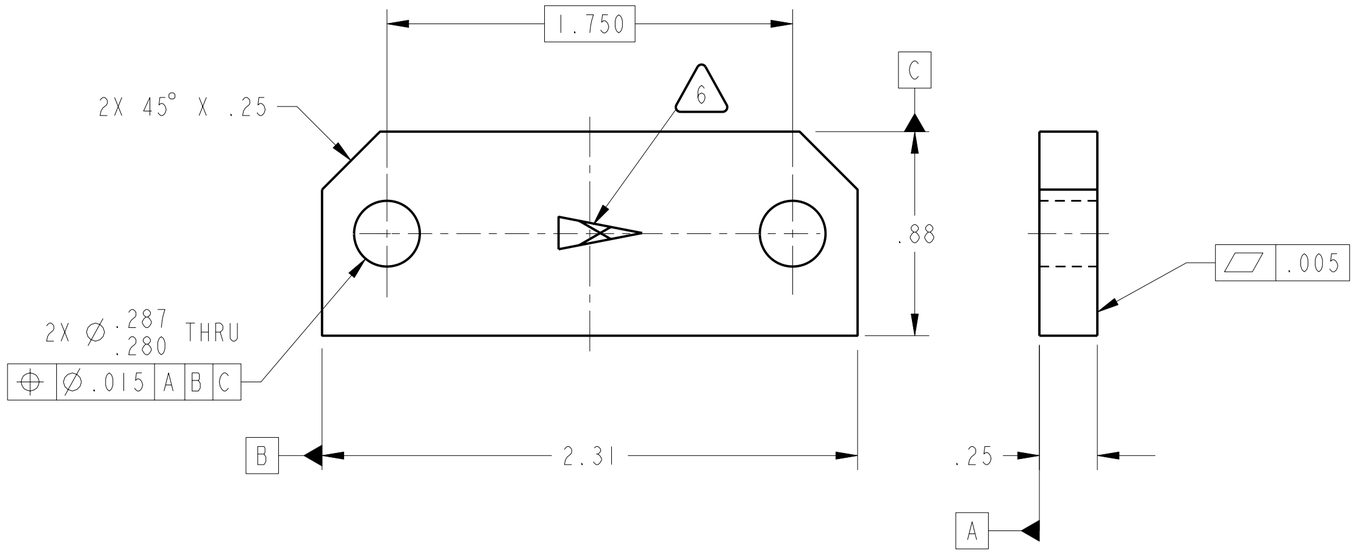

GENERAL NOTES

1. MATERIAL: INCONEL 718 ANNEALED PER AMS 5662 OR EQUIVALENT

2. 125 Ra ALL OVER PER ANSI/ASME B46.1.

3. ALL DIMENSIONS APPLY AFTER HEAT TREAT.

4. MATERIAL CERTIFICATE OF CONFORMANCE, HEAT TREAT FURNACE CHARTS/CERTIFICATIONS AND FULL INSPECTION REPORT REQUIRED.

5. HEAT TREAT MACHINED PART AS FOLLOWS:

   A) SOLUTION TREAT (ARGON FURNACE) - RAMP UP TO 1750°F FOR 1 HOUR PER INCH OF THICKNESS BUT 10 MINUTE MINIMUM, AIR COOL.

   B) PRECIPITATION HARDENING- RAMP UP TO 1325°F FOR 8 HOURS, FURNACE COOL TO 1150°F AND HOLD FOR 10 HRS, AIR COOL AFTERWARDS.

6. MARK PART WITH IDENTIFICATION NUMBER IN POSITION SHOWN BY LASER PER SAE-AS478-15B2, AFTER HEAT TREATMENT. THE PART IDENTIFICATION NUMBER SHALL BE THE DRAWING NUMBER, A DASH, A SERIAL NUMBER AND THE DRAWING REVISION. FABRICATOR TO SERIALIZE PARTS DURING MANUFACTURE. SERIAL NUMBER(S) WILL BE PROVIDED BY GESS3.
   EXAMPLE: BR1014-001 REV -

CHG	ZONE	DESCRIPTION	APP/DATE
A	-	RETITLED	JJM 11-04-13

REVISIONS

PRIOR TO USE VERIFY THE INTENDED PURPOSE IN PDM ("FOR" ATTRIBUTE)

UNLESS OTHERWISE SPECIFIED DIMENSIONS ARE IN INCHES		CONTRACT NNC12BA01B CONTRACTOR GESS3 TEAM	
TOLERANCE ON		TASK ORDER	264
.X	± 0.03	DRAFTER	J. ASSION
.XX	± 0.01	ENGINEER	J. MAYER
.XXX	± 0.005	DESIGNER	J. ASSION
FRACTION	± -	DIMENSIONING AND TOLERANCING PER ASME Y14.5M-1994	
ANGULAR	± 0.50°		
BREAK EDGES .02 MAX			

PDM REL LEVEL: StdParts PDM REVISION: x.21
PDM DATABASE:
MODEL NAME: BR1014
CHECK FOR ANY OUTSTANDING ECO'S PRIOR TO USE

NATIONAL AERONAUTICS AND SPACE ADMINISTRATION
JOHN H. GLENN RESEARCH CENTER
LEWIS FIELD
CLEVELAND, OHIO

BURN RIG TEST ASSEMBLY #1

BR1001

1014 VENT COVER

SIZE	DRAWING NUMBER	REV	BLDG	AREA
C	BR1014	A	34	121

UNITS: INCH

SCALE:	INITIAL REL DATE	SHEET	DISCIPLINE
2/1	10-18-2013	1 OF 1	MECHANICAL

PRO/E VERSION: Wildfire 5.0

SIZE C DRAWING NUMBER BR1014 REV A

NAME:JASSION OBJECT:BR1014 DATE:06-Nov-13 10:14:37

GENERAL NOTES

1. MATERIAL: MATERIAL: 304 STAINLESS STEEL PER ASTM A 240.

2. 125 Ra ALL OVER PER ANSI/ASME B46.1.

3. PASSIVATE PER ASTM-A297.

4. MARK PART WITH IDENTIFICATION NUMBER IN POSITION SHOWN BY LASER PER SAE-AS478-15B2, AFTER HEAT TREATMENT. THE PART IDENTIFICATION NUMBER SHALL BE THE DRAWING NUMBER, A DASH, A SERIAL NUMBER AND THE DRAWING REVISION. FABRICATOR TO SERIALIZE PARTS DURING MANUFACTURE. SERIAL NUMBER(S) WILL BE PROVIDED BY GESS3.
EXAMPLE: BR1015-001 REV -

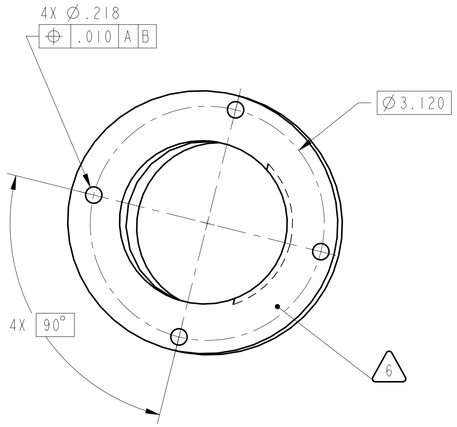

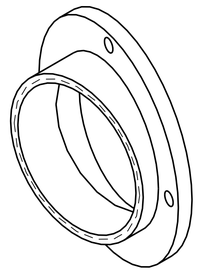

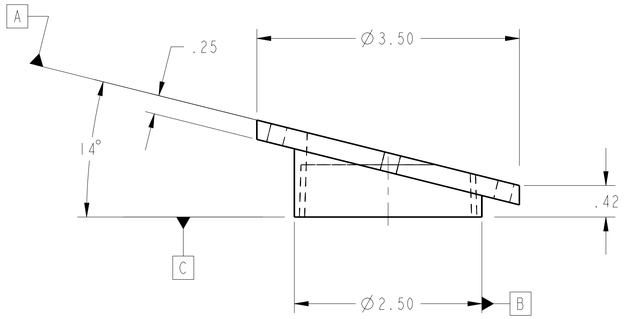

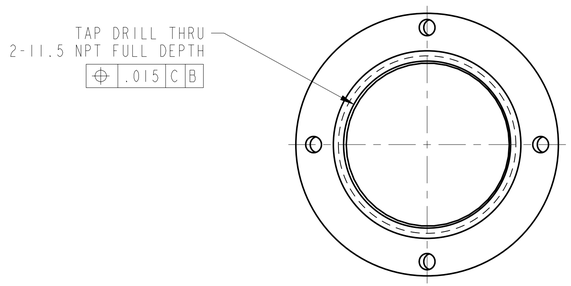

CHG	ZONE	DESCRIPTION	APP/DATE
A	-	RETITLED	JJM 11-04-13

REVISIONS

PRIOR TO USE VERIFY THE INTENDED PURPOSE IN PDM ("FOR" ATTRIBUTE)

UNLESS OTHERWISE SPECIFIED DIMENSIONS ARE IN INCHES

CONTRACT NNC12BA01B
CONTRACTOR GESS3 TEAM
TASK ORDER 264

TOLERANCE ON			
.X	± 0.03	DRAFTER	A.ERKER
.XX	± 0.01	ENGINEER	J.MAYER
.XXX	± 0.005	DESIGNER	A.ERKER
FRACTION	± -	DIMENSIONING AND TOLERANCING PER ASME Y14.5M-1994	
ANGULAR	± 0.50°		
BREAK EDGES	-		

PDM REL LEVEL: PDM REVISION:
PDM DATABASE: NOT UNDER CONFIG MANAGEMENT
MODEL NAME: BR1015
CHECK FOR ANY OUTSTANDING ECO'S PRIOR TO USE

NATIONAL AERONAUTICS AND SPACE ADMINISTRATION
JOHN H. GLENN RESEARCH CENTER
LEWIS FIELD
CLEVELAND, OHIO

UPSTREAM SHIELD ASSEMBLY

BR1037

1015 SIGHT GLASS ADAPTER

SIZE	DRAWING NUMBER	REV	BLDG	AREA
D	BR1015	A	34	121

UNITS: INCH

SCALE:	INITIAL REL DATE	SHEET	DISCIPLINE
1/1	10-18-2013	1 OF 1	MECHANICAL

PRO/E VERSION: Wildfire 5.0

SIZE D DRAWING NUMBER BR1015 REV A

NAME:JARRON OBJECT:BR1015 DATE:05-Nov-13 09:44:46

GENERAL NOTES

1. MATERIAL: INCONEL 718 ANNEALED PER AMS 5662 OR EQUIVALENT

2. 125 Ra ALL OVER PER ANSI/ASME B46.1.

3. ALL DIMENSIONS APPLY AFTER HEAT TREAT.

4. MATERIAL CERTIFICATE OF CONFORMANCE, HEAT TREAT FURNACE CHARTS/CERTIFICATIONS AND FULL INSPECTION REPORT REQUIRED.

5. HEAT TREAT MACHINED PART AS FOLLOWS:

   A) SOLUTION TREAT (ARGON FURNACE) - RAMP UP TO 1750°F FOR 1 HOUR PER INCH OF THICKNESS BUT 10 MINUTE MINIMUM, AIR COOL.

   B) PRECIPITATION HARDENING- RAMP UP TO 1325°F FOR 8 HOURS, FURNACE COOL TO 1150°F AND HOLD FOR 10 HRS, AIR COOL AFTERWARDS.

6. MARK PART WITH IDENTIFICATION NUMBER IN POSITION SHOWN BY LASER PER SAE-AS478-15B2, AFTER HEAT TREATMENT. THE PART IDENTIFICATION NUMBER SHALL BE THE DRAWING NUMBER, A DASH, A SERIAL NUMBER AND THE DRAWING REVISION. FABRICATOR TO SERIALIZE PARTS DURING MANUFACTURE. SERIAL NUMBER(S) WILL BE PROVIDED BY GESS3.
   EXAMPLE: BR1017-001 REV -

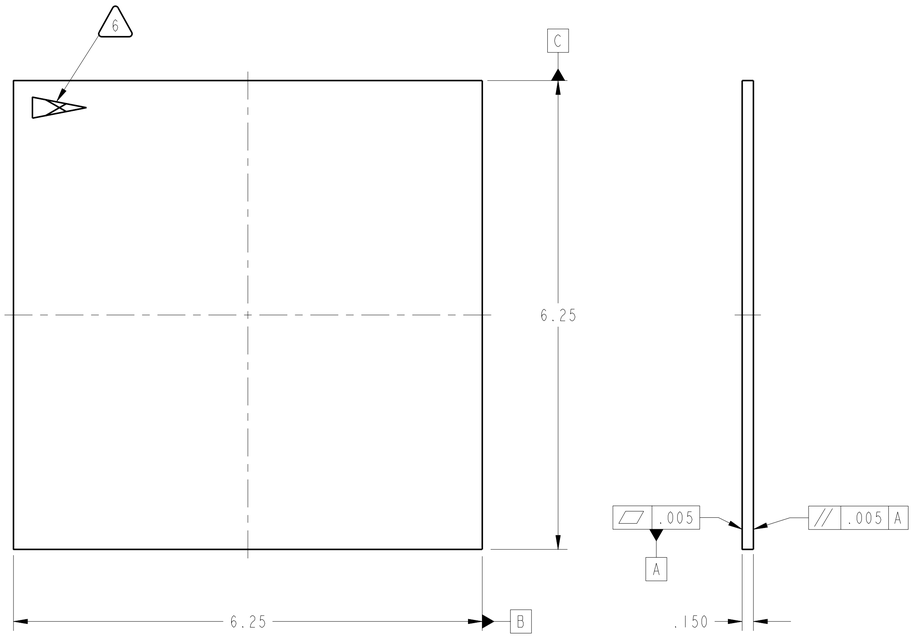

CHG	ZONE	DESCRIPTION	APP/DATE
A	-	RETITLED	JJM 11-04-13

REVISIONS

PRIOR TO USE VERIFY THE INTENDED PURPOSE IN PDM ("FOR" ATTRIBUTE)

UNLESS OTHERWISE SPECIFIED DIMENSIONS ARE IN INCHES

CONTRACT NNC12BA01B

CONTRACTOR GESS3 TEAM

TOLERANCE ON		TASK ORDER	264
.X	± 0.1	DRAFTER	J. ASSION
.XX	± 0.01	ENGINEER	J. MAYER
.XXX	± 0.005	DESIGNER	J. MAYER
FRACTION	± -		
ANGULAR	± 0.50°		
BREAK EDGES	.02 MAX		

DIMENSIONING AND TOLERANCING PER ASME Y14.5M-1994

PDM REL LEVEL:

PDM REVISION:

PDM DATABASE:

MODEL NAME: BR1017

CHECK FOR ANY OUTSTANDING ECO'S PRIOR TO USE

NATIONAL AERONAUTICS AND SPACE ADMINISTRATION
JOHN H. GLENN RESEARCH CENTER
LEWIS FIELD
CLEVELAND, OHIO

BURN RIG TEST ASSEMBLY #1

BR1001

1017 PANEL SIMULATOR

SIZE	DRAWING NUMBER	REV	BLDG	AREA
D	BR1017	A	34	121

UNITS: INCH

SCALE:	INITIAL REL DATE	SHEET	DISCIPLINE
1/1	10-18-2013	1 OF 1	MECHANICAL

PRO/E VERSION: Wildfire 5.0

SIZE D DRAWING NUMBER BR1017 REV A

NAME:JASSION OBJECT:BR1017 DATE:08-Nov-13 16:14:23

GENERAL NOTES

1. MATERIAL: HAYNES HS188 PER AMS 5608.

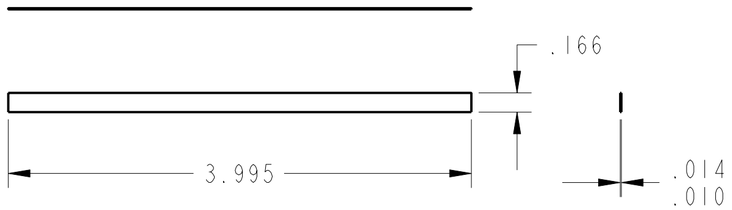

CHG	ZONE	DESCRIPTION	APP/DATE
A	-	RETITLED	JJM 11-04-13

REVISIONS

PRIOR TO USE VERIFY THE INTENDED PURPOSE IN PDM ("FOR" ATTRIBUTE)

UNLESS OTHERWISE SPECIFIED DIMENSIONS ARE IN INCHES		CONTRACT NNC12BA01B CONTRACTOR GESS3 TEAM	
TOLERANCE ON		TASK ORDER	264
.X	± 0.03	DRAFTER	J. ASSION
.XX	± 0.01	ENGINEER	J. MAYER
.XXX	± 0.005	DESIGNER	J. ASSION
FRACTION	± -	DIMENSIONING AND TOLERANCING PER ASME Y14.5M-1994	
ANGULAR	± 0.50°		
BREAK EDGES	N/A		

PDM REL LEVEL: PDM REVISION:

PDM DATABASE:

MODEL NAME: BR1024

CHECK FOR ANY OUTSTANDING ECO'S PRIOR TO USE

NATIONAL AERONAUTICS AND SPACE ADMINISTRATION
JOHN H. GLENN RESEARCH CENTER
LEWIS FIELD
CLEVELAND, OHIO

TEST ASSEMBLY #2

BR1023 A

1024 SHIM #2

SIZE	DRAWING NUMBER	REV	BLDG	AREA
C	BR1024	A	34	121

UNITS: INCH

SCALE:	INITIAL REL DATE	SHEET	DISCIPLINE
1/1	10-18-2013	1 OF 1	MECHANICAL

PRO/E VERSION:

SIZE C | DRAWING NUMBER BR1024 | REV A

NAME:JASSION OBJECT:BR1024 DATE:06-Nov-13 10:13:05

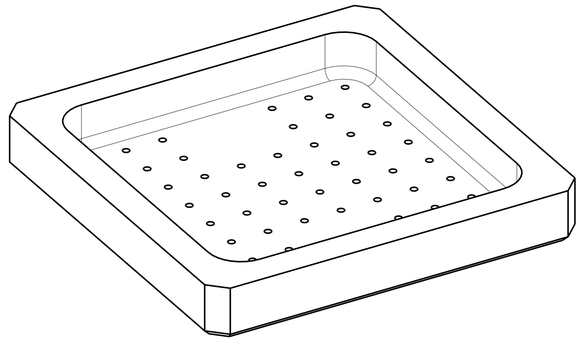

GENERAL NOTES

1. MATERIAL: INCONEL 718 ANNEALED PER AMS 5662 OR EQUIVALENT

2. 125 Ra ALL OVER PER ANSI/ASME B46.1.

3. ALL DIMENSIONS APPLY AFTER HEAT TREAT.

4. MATERIAL CERTIFICATE OF CONFORMANCE, HEAT TREAT FURNACE CHARTS/CERTIFICATIONS AND FULL INSPECTION REPORT REQUIRED.

5. HEAT TREAT MACHINED PART AS FOLLOWS:

   A) SOLUTION TREAT (ARGON FURNACE) - RAMP UP TO 1750°F FOR 1 HOUR PER INCH OF THICKNESS BUT 10 MINUTE MINIMUM, AIR COOL.

   B) PRECIPITATION HARDENING- RAMP UP TO 1325°F FOR 8 HOURS, FURNACE COOL TO 1150°F AND HOLD FOR 10 HRS, AIR COOL AFTERWARDS.

6. MARK PART WITH IDENTIFICATION NUMBER IN POSITION SHOWN BY LASER PER SAE-AS478-15B2, AFTER HEAT TREATMENT. THE PART IDENTIFICATION NUMBER SHALL BE THE DRAWING NUMBER, A DASH, A SERIAL NUMBER AND THE DRAWING REVISION. FABRICATOR TO SERIALIZE PARTS DURING MANUFACTURE. SERIAL NUMBER(S) WILL BE PROVIDED BY GESS3.
   EXAMPLE: BR1027-001 REV -

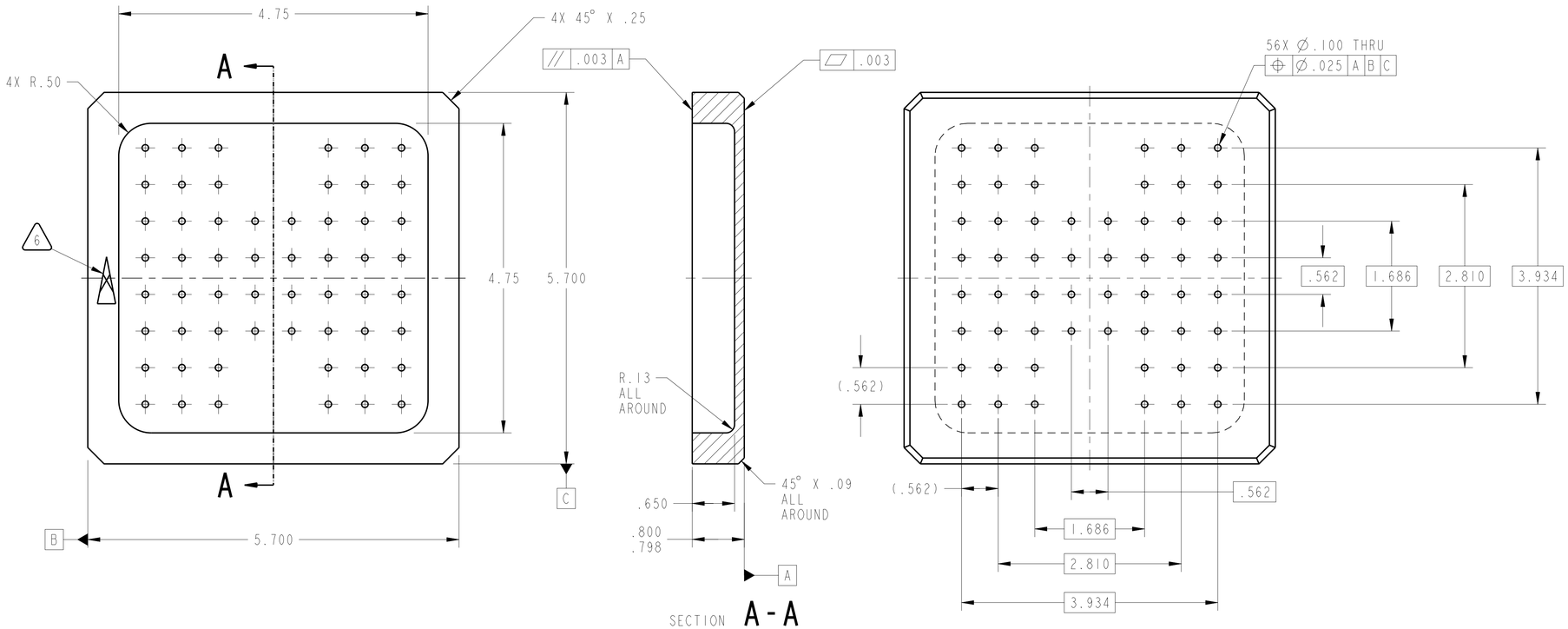

A	-	RETITLED	JJM 11-04-13
CHG	ZONE	DESCRIPTION	APP/DATE

REVISIONS

PRIOR TO USE VERIFY THE INTENDED PURPOSE IN PDM ("FOR" ATTRIBUTE)

UNLESS OTHERWISE SPECIFIED DIMENSIONS ARE IN INCHES

CONTRACT NNC12BA01B

CONTRACTOR GESS3 TEAM

TOLERANCE ON		TASK ORDER	264
.X	± 0.1	DRAFTER	J. ASSION
XX	± 0.01	ENGINEER	J. MAYER
.XXX	± 0.005	DESIGNER	J. MAYER
FRACTION	± -	DIMENSIONING AND TOLERANCING PER ASME Y14.5M-1994	
ANGULAR	± 0.50°		
BREAK EDGES	.02 MAX		

NATIONAL AERONAUTICS AND SPACE ADMINISTRATION
JOHN H. GLENN RESEARCH CENTER
LEWIS FIELD
CLEVELAND, OHIO

BURN RIG TEST ASSEMBLY

BR1021

1027 PLATE #2

PDM REL LEVEL: PDM REVISION:

PDM DATABASE:

MODEL NAME: BR1027

CHECK FOR ANY OUTSTANDING ECO'S PRIOR TO USE

SIZE	DRAWING NUMBER	REV	BLDG	AREA
D	BR1027	A	34	121

UNITS: INCH

SCALE:	INITIAL REL DATE	SHEET	DISCIPLINE
1/1	10-18-2013	1 OF 1	MECHANICAL

PRO/E VERSION: Wildfire 5.0

SIZE D DRAWING NUMBER BR1027 REV A

NAME:JASSION OBJECT:BR1027 DATE:26-Nov-13 16:15:15

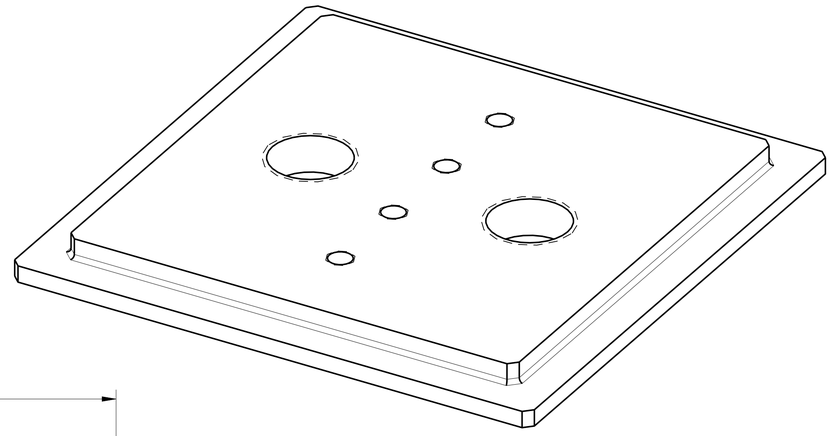

GENERAL NOTES

1. MATERIAL: INCONEL 718 ANNEALED PER AMS 5662 OR EQUIVALENT

2. 125 Ra ALL OVER PER ANSI/ASME B46.1.

3. ALL DIMENSIONS APPLY AFTER HEAT TREAT.

4. MATERIAL CERTIFICATE OF CONFORMANCE, HEAT TREAT FURNACE CHARTS/CERTIFICATIONS AND FULL INSPECTION REPORT REQUIRED.

5. HEAT TREAT MACHINED PART AS FOLLOWS:

   A) SOLUTION TREAT (ARGON FURNACE) - RAMP UP TO 1750°F FOR 1 HOUR PER INCH OF THICKNESS BUT 10 MINUTE MINIMUM, AIR COOL.

   B) PRECIPITATION HARDENING- RAMP UP TO 1325°F FOR 8 HOURS, FURNACE COOL TO 1150°F AND HOLD FOR 10 HRS, AIR COOL AFTERWARDS.

△6 MARK PART WITH IDENTIFICATION NUMBER IN POSITION SHOWN BY LASER PER SAE-AS478-15B2, AFTER HEAT TREATMENT. THE PART IDENTIFICATION NUMBER SHALL BE THE DRAWING NUMBER, A DASH, A SERIAL NUMBER AND THE DRAWING REVISION. FABRICATOR TO SERIALIZE PARTS DURING MANUFACTURE. SERIAL NUMBER(S) WILL BE PROVIDED BY GESS3.
EXAMPLE: BR1028-001 REV -

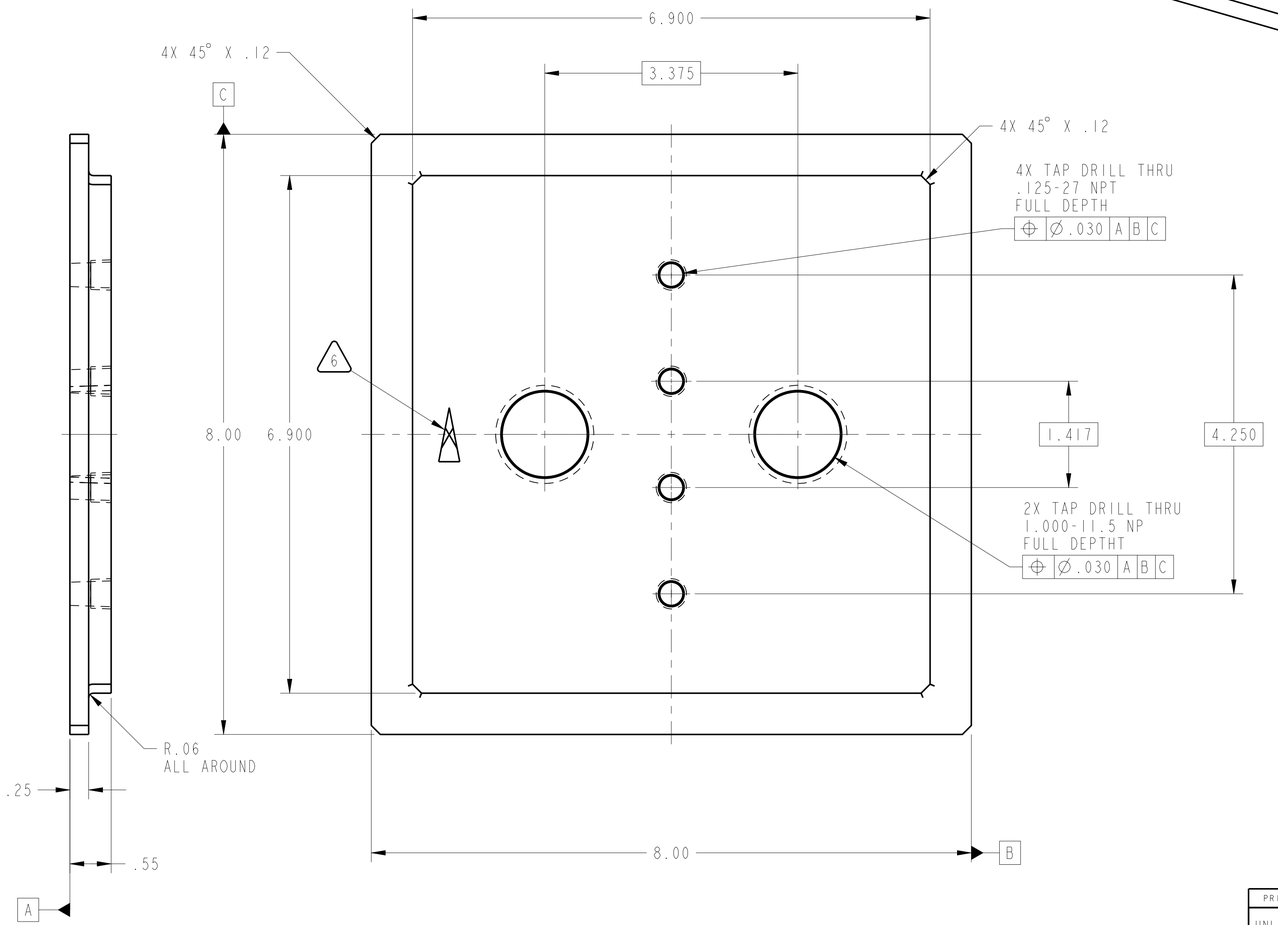

CHG	ZONE	DESCRIPTION	APP/DATE
A	-	RETITLED	JJM 11-04-13

REVISIONS

PRIOR TO USE VERIFY THE INTENDED PURPOSE IN PDM ("FOR" ATTRIBUTE)

UNLESS OTHERWISE SPECIFIED DIMENSIONS ARE IN INCHES

CONTRACT NNC12BA01B

CONTRACTOR GESS3 TEAM

TOLERANCE ON		TASK ORDER	264
.X	± 0.1	DRAFTER	J. ASSION
.XX	± 0.01	ENGINEER	J. MAYER
.XXX	± 0.005	DESIGNER	J. MAYER
FRACTION	± -	DIMENSIONING AND TOLERANCING PER ASME Y14.5M-1994	
ANGULAR	± 0.50°		
BREAK EDGES	.02 MAX		

PDM REL LEVEL: PDM REVISION:

PDM DATABASE:
MODEL NAME: BR1028

CHECK FOR ANY OUTSTANDING ECO'S PRIOR TO USE

NATIONAL AERONAUTICS AND SPACE ADMINISTRATION
JOHN H. GLENN RESEARCH CENTER
LEWIS FIELD
CLEVELAND, OHIO

HOUSING BOTTOM PLATE SUB-ASSEMBLY #2

BR1040

1028 HOUSING BOTTOM PLATE #2

SIZE	DRAWING NUMBER	REV	BLDG	AREA
D	BR1028	A	34	121

UNITS: INCH

SCALE:	INITIAL REL DATE	SHEET	DISCIPLINE
1/1	10-18-2013	1 OF 1	MECHANICAL

PRO/E VERSION: Wildfire 5.0

SIZE D DRAWING NUMBER BR1028 REV A

NAME:JASSION OBJECT:BR1028 DATE:06-Nov-13 08:49:29