| COMMERCIAL PARTS LIST | | |
|---|---|---|
| BALLOON NO | DESCRIPTION | QTY/ASSY |
| 1 | INSERT, HELICOIL PART NO. 3591-2CN-328 (FOR #8-36 UNF FASTENER) | 17 |

1. MATERIAL: TYPE 304 STAINLESS STEEL
2. REMOVE ALL BURRS AND SHARP EDGES
3. MACHINE OUTER CONTOUR PER CAD DEFINITION 1308xxMRA002.STP
4. DO NOT BREAK EDGE
5. FOR DIAMETER INSPECTION, USE 3 POINT ROUNDNESS MEASUREMENT
6. ELECTROCHEMICAL ETCH DRAWING PART NUMBER ON SPECIFIED SURFACE, PER SAE-AS478, METHOD 7A

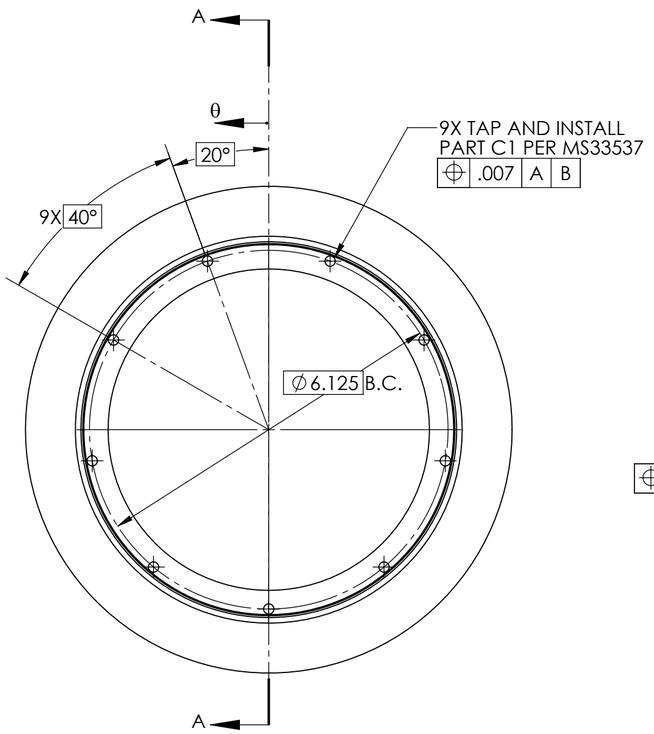


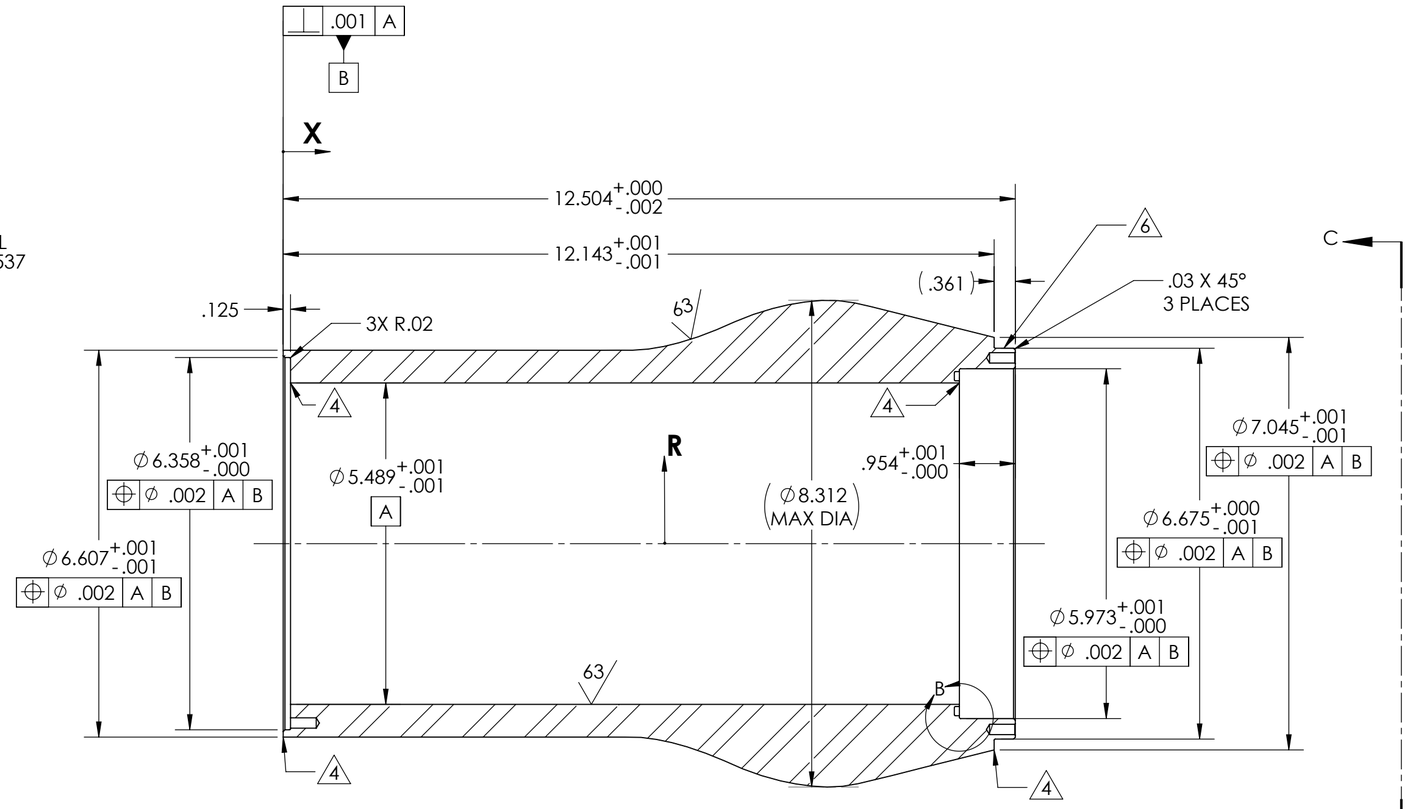


SECTION A-A

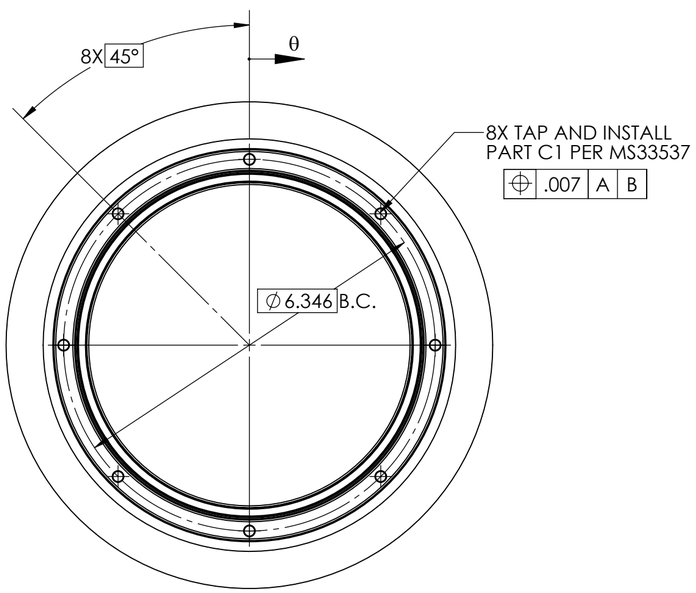


SECTION C-C

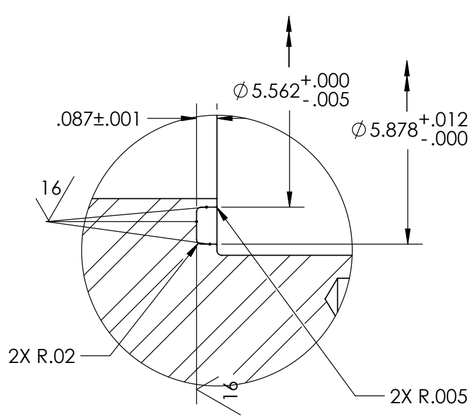


DETAIL B
SCALE 2 : 1

| OUTER CONTOUR INSPECTION | | |
|---|---|---|
| X | R | R INSP |
| 0.500 | 3.304 | |
| 2.500 | 3.304 | |
| 5.750 | 3.304 | |
| 6.500 | 3.367 | |
| 7.000 | 3.503 | |
| 7.500 | 3.693 | |
| 8.000 | 3.904 | |
| 8.500 | 4.052 | |
| 9.000 | 4.137 | |
| 9.293 | 4.156 | |
| 9.500 | 4.149 | |
| 10.000 | 4.057 | |
| 11.000 | 3.807 | |
| 12.000 | 3.558 | |

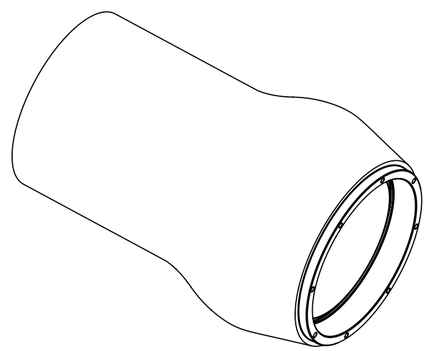

| REV | DESCRIPTION | DATE |
|---|---|---|
| A | ADDED INSPECTION TABLES | 14AUG13 |
| B | UPDATED TOLERANCE CALLOUTS | 18SEP13 |

UNLESS OTHERWISE SPECIFIED DIMENSIONS ARE IN INCHES TOLERANCES ARE

DECIMALS .XXX ± .005 .XX ± .010 .X ± .030

FRACTIONS ±1/16 MACH ANGLES ±1/2°

MACHINED SURFACE ROUGHNESS 63 Ra UNLESS OTHERWISE NOTED

| | NAME | DAY-MO-YR |
|---|---|---|
| DRAWN | DGE | 01AUG13 |

DIMENSIONING AND TOLERANCING PER ASME Y14.5M-1994

PROJECT: AAPL/NATR/HFJER THIRD STREAM 2014 **(THRD14)**

A002 CORE NOZZLE FORWARD SECTION C2 - (Af/Ac=1.75)

| SIZE | DRAWING NUMBER | REV |
|---|---|---|
| C | 1308xxMRA002 | B |

SCALE: 1:2 SHEET 1 OF 1