REPLACE ASBESTOS SIDING (BUILDINGS 4755 / 4619)

MARSHALL SPACE FLIGHT CENTER, ALABAMA

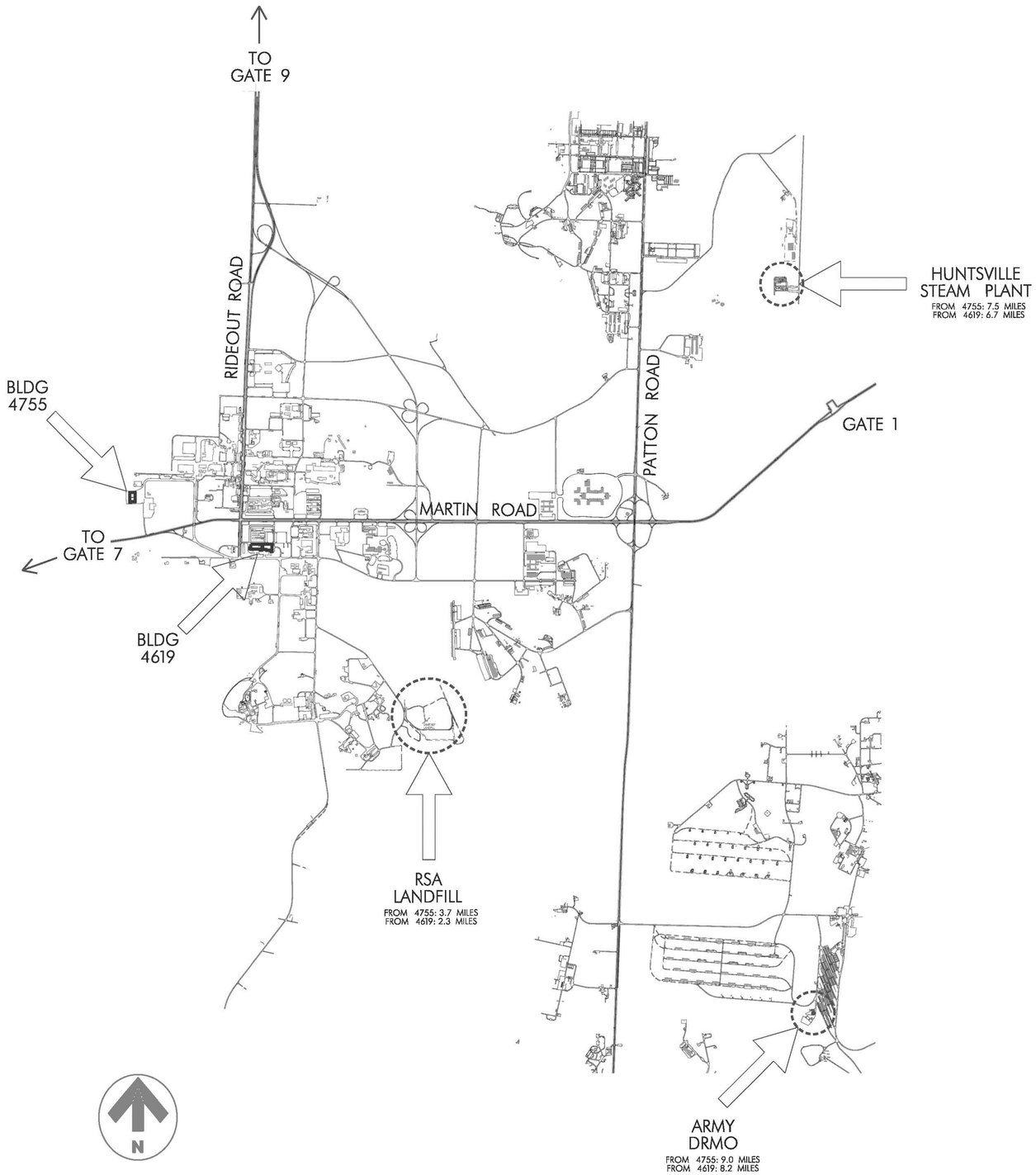

VICINITY MAP
N.T.S.

INDEX OF DRAWINGS

	REF. NO.	SHEET TITLE	DRAWING NO.	REV.
GENERAL	X1	TITLE SHEET: DRAWING INDEX, VICINITY MAP	FAC-GJ-4619-X1	
	X2	TITLE SHEET: DRAWING INDEX, AERIAL VIEW -SITE PLAN	FAC-GJ-4619-X2	
	X3	ABBREVIATIONS, SYMBOLS, NOTES, KEY PLANS	FAC-GJ-4619-X3	
		ARCHITECTURAL		
	AG.1	ARCHITECTURAL: FLOOR PLAN - WEST	FAC-GJ-4619-AG1	
	AG.2	ARCHITECTURAL: FLOOR PLAN - EAST	FAC-GJ-4619-AG2	
ADD ALT 1	A1.1	DEMOLITION: PHOTOGRAPHS, NOTES	FAC-GJ-4619-A1.1	
	A1.2	ARCHITECTURAL: ELEVATIONS, NOTES	FAC-GJ-4619-A1.2	
	A1.3	ARCHITECTURAL: ELEVATIONS	FAC-GJ-4619-A1.3	
	A1.4	ARCHITECTURAL: TRANSLUCENT PANEL, LOUVER DETAILS	FAC-GJ-4619-A1.4	
	A1.5	ARCHITECTURAL: LOUVER, SLIDING DOOR DETAILS	FAC-GJ-4619-A1.5	
	A1.6	ARCHITECTURAL: DETAILS	FAC-GJ-4619-A1.6	
	A1.7	ARCHITECTURAL: WINDOW ELEVATIONS, DETAILS	FAC-GJ-4619-A1.7	
		MECHANICAL - ELECTRICAL		
	ME1.1	DEMOLITION: PHOTOGRAPHS, NOTES	FAC-GJ-4619-ME1.1	
ADD ALT 2				
		ARCHITECTURAL		
	A2.1	DEMOLITION: PHOTOGRAPHS, NOTES	FAC-GJ-4619-A2.1	
	A2.2	ARCHITECTURAL: ELEVATIONS, NOTES	FAC-GJ-4619-A2.2	
	A2.3	ARCHITECTURAL: ELEVATIONS, NOTES	FAC-GJ-4619-A2.3	
	A2.4	ARCHITECTURAL: TRANSLUCENT PANEL DETAILS	FAC-GJ-4619-A2.4	
	A2.5	ARCHITECTURAL: WALL PANEL, LOUVER, DOOR DETAILS	FAC-GJ-4619-A2.5	
	A2.6	ARCHITECTURAL: SLIDING DOOR DETAILS	FAC-GJ-4619-A2.6	
		MECHANICAL - ELECTRICAL		
	ME2.1	DEMOLITION: PHOTOGRAPHS, NOTES	FAC-GJ-4619-ME2.1	

WARNING
DO NOT SCALE THIS DRAWING
THIS DRAWING WAS DESIGNED TO BE PRINTED AT A NASA SHEET SIZE: MSFC STD. SIZE 40" X 28"

PRELIMINARY CADD DWG.
CHANGES TO THIS DRAWING SHALL BE MADE ON CADD ONLY.
3143268 02-15-12 LMD
LATEST CADD UPDATE: 09-25-13 06:00 AM BY: RGB

ATTENTION!

ALL CONTRACTORS AND SUBCONTRACTORS PREPARING BIDS FOR THIS PROJECT

USING A 'COMPARABLE, EQUAL' OR 'SUBSTITUTION' PRODUCT, IN THE PLACE OF A 'BASIS OF DESIGN' PRODUCT, MAY REQUIRE CHANGES TO THE MECHANICAL, ELECTRICAL, STRUCTURAL OR ARCHITECTURAL BUILDING SYSTEMS IN ORDER TO ACCOMMODATE THE PRODUCT. THE CONTRACTOR IS RESPONSIBLE FOR ALL COSTS OF MAKING CHANGES TO THE BUILDING SYSTEMS. SUBMIT IN ACCORDANCE WITH SPEC SECTION 01 60 00 PRODUCT REQUIREMENT.

CONCURRENCE: DATE:
CONCURRENCE: DATE:
CONCURRENCE: DATE: 10/3/13
ASOE PLANNING OFFICE
CONCURRENCE: DATE: 10/31/13
USER PROJECT MANAGER
CONCURRENCE: DATE: 10/21/13
ASIO ENVIRONMENTAL ENGINEERING OFFICE
CONCURRENCE: DATE:
USING OFFICE
CONCURRENCE: DATE: 10/29/13
ASOE OPERATIONS & MAINTENANCE GROUP
CONCURRENCE: DATE: 10/31/13
ASIO ENVIRONMENTAL HEALTH
CONCURRENCE: DATE: 10/30/13
OSHE SAFETY OFFICE
CONCURRENCE: DATE: 10/29/13
IS40 COMMUNICATIONS OFFICE
TELECOMMUNICATIONS EQUIPMENT AFFECTED BY THIS CONTRACT WORK IS NOT TO BE ALTERED OR REMOVED BY THE CONTRACTOR. CONTACT THE COTR IN THE EVENT OF A CONFLICT
REF. NO. X1 OF 3

REV.	BY	DATE	REVISION	C.I. NO.	APPROVED

Marshall Space Flight Center
Huntsville, Alabama 35812

WORK REQUEST NO. 3143268

BUILDING 4619
REPLACE ASBESTOS SIDING
(BUILDINGS 4755/4619)
TITLE SHEET: DRAWING INDEX, VICINITY MAP

AE FIRM: KAYA Associates, Inc. — NASA AE/CONTRACT NO. NNM11AA39C

SUBMITTED: DAVID A. SELLERS — AE: — DATE:
APPROVAL RECOMMENDED: — A322 PROJ. A/E — DATE: 10/22/13
APPROVED: — A322 GROUP LEAD — DATE:
DESIGNED: L. DANIELL
DRAWN: L. DANIELL
CHECKED: R. BARTON
SCALE: AS NOTED
APPROVAL RECOMMENDED: — A322 TEAM LEAD — DATE: 10/22/13
SPEC. NO. M5052

DRAWING NO. FAC-GJ-4619-X1

MSFC-FORM 232 REV. 8-21-89-RCL

MSFC MASTER BID DISK 11-18-2013

$file$

AERIAL VIEW - SITE PLAN
N.T.S.

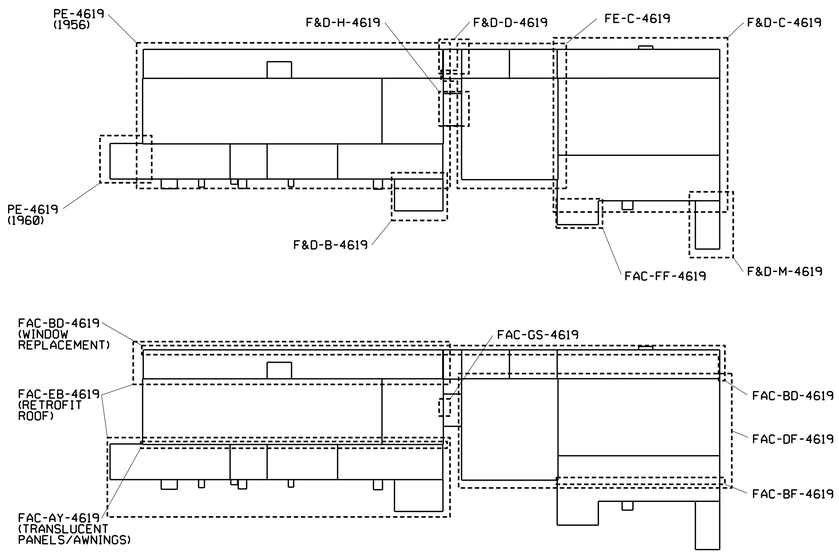

RECORD DRAWINGS KEY PLANS
N.T.S.

THE FOLLOWING SETS OF DRAWINGS (NOT COMPLETE IN ALL CASES) ARE PROVIDED TO BIDDERS AS "INFORMATION TO BIDDERS" FOR INFORMATIONAL PURPOSES AND ARE NOT A PART OF THE CONTRACT FOR THE WORK. THE KEY PLAN GIVES A GENERAL REPRESENTATION OF THE LOCATIONS INVOLVED WITH EACH RESPECTIVE SET OF DRAWINGS.

RECORD DRAWINGS

DRAWING NUMBER	DESCRIPTION/TITLE	DESIGN YEAR (APPROX)
PE-4619-S-M	DESIGN DRAWINGS STRUCTURES AND MECHANICS BUILDING	1956
PE-4619-RED	VARIOUS DESIGN DRAWINGS	1960
FE-C-4619	DESIGN DRAWINGS LOAD TEST ANNEX	1962
F&D-B-4619	DESIGN DRAWINGS TEST FIXTURE PREP ROOM ADDITION	1964
F&D-C-4619	DESIGN DRAWINGS EXTENSION OF LOAD TEST ANNEX	1964
F&D-D-4619	DESIGN DRAWINGS TOILET AND LOCKER RM FACILITIES ADDITION	1964
F&D-H-4619	DESIGN DRAWINGS INSTRUMENTATION ROOM FOR LTA	1965
F&D-M-4619	DESIGN DRAWINGS ACOUSTIC HORN ROOM	1965
FAC-AY-4619	DESIGN DRAWINGS (PASSIVE SOLAR SYSTEM) REHABILITATION OF 4619 - PHASE I	1978
FAC-BF-4619	DESIGN DRAWINGS PASSIVE HEATING SYSTEM EAST WING	1981
FAC-BD-4619	DESIGN DRAWINGS (WINDOW REPLACEMENT) REHABILITATION OF E.L.T.A. & L.T.A.	1980
FAC-DF-4619	DESIGN DRAWINGS REPAIR HIGH BAY ROOF OF 4619	1995
FAC-EB-4619	DESIGN DRAWINGS REPAIR NW & SW LOW ROOFS OF 4619	1997
FAC-FF-4619	DESIGN DRAWINGS TENSILE TEST LAB BUILDING ADDITION	2004
FAC-GS-4619	DESIGN DRAWINGS PROVIDE HVAC SYSTEM FOR ROOM 301	2013

REPLACE ASBESTOS SIDING (BUILDINGS 4755 / 4619)

MARSHALL SPACE FLIGHT CENTER, ALABAMA

INDEX OF DRAWINGS (CONTINUED FROM SHEET X1)

	REF. NO.	SHEET TITLE	DRAWING NO.	REV.
ADD ALT 3		ARCHITECTURAL		
	A3.1	DEMOLITION: PHOTOGRAPHS, NOTES	FAC-GJ-4619-A3.1	
	A3.2	DEMOLITION: PHOTOGRAPHS, NOTES	FAC-GJ-4619-A3.2	
	A3.3	ARCHITECTURAL: ELEVATIONS	FAC-GJ-4619-A3.3	
	A3.4	ARCHITECTURAL: ELEVATIONS	FAC-GJ-4619-A3.4	
	A3.5	ARCHITECTURAL: TRANSLUCENT PANEL DETAILS	FAC-GJ-4619-A3.5	
	A3.6	ARCHITECTURAL: DETAILS	FAC-GJ-4619-A3.6	
	A3.7	ARCHITECTURAL: ROOF DETAILS	FAC-GJ-4619-A3.7	
		MECHANICAL - ELECTRICAL		
	ME3.1	DEMOLITION: PHOTOGRAPHS, NOTES	FAC-GJ-4619-ME3.1	
	ME3.2	DEMOLITION: PHOTOGRAPHS, NOTES	FAC-GJ-4619-ME3.2	
ADD ALT 4		ARCHITECTURAL		
	A4.1	ARCHITECTURAL: PHOTOGRAPHS, NOTES	FAC-GJ-4619-A4.1	
	A4.2	ARCHITECTURAL: PHOTOGRAPHS, NOTES	FAC-GJ-4619-A4.2	
	A4.3	ARCHITECTURAL: PHOTOGRAPHS, NOTES	FAC-GJ-4619-A4.3	

WARNING
DO NOT SCALE THIS DRAWING
THIS DRAWING WAS DESIGNED TO BE PRINTED AT A NASA SHEET SIZE: MSFC STD. SIZE 40" X 28"

PRELIMINARY CADD DWG.
CHANGES TO THIS DRAWING SHALL BE MADE ON CADD ONLY.
3143268 04-12-12 ROB
LATEST CADD UPDATE: 11-18-13 12:35 PM BY: ROB

REV.	BY	DATE	REVISION	C.I. NO.	APPROVED

Marshall Space Flight Center
Huntsville, Alabama 35812

WORK REQUEST NO. 3143268

BUILDING 4619
REPLACE ASBESTOS SIDING
(BUILDINGS 4755/4619)
TITLE SHEET: DRAWING INDEX, AERIAL VIEW - SITE PLAN

AE FIRM: KAYA Associates, Inc.
NASA AE CONTRACT NO. NAS8- NNM11AA39C

SUBMITTED: DAVID A. SELLERS	APPROVAL RECOMMENDED: AS22 PROJECT A/E	APPROVED:	
AE: DATE:	APPROVAL RECOMMENDED: AS22 SUPPORT A/E	AS22 GROUP LEAD	DATE:
DESIGNED BARTON	APPROVAL RECOMMENDED: KAYA Associates, Inc.	DRAWING NO. FAC-GJ-4619-X2	
DRAWN BARTON			
CHECKED DANIELL			
SCALE: AS NOTED	SPEC. NO. FAC M5052		

SIGNATURES ON INDEX SHEET INDICATE ACCEPTANCE OF THIS SHEET

REF. NO. X2 OF 3

MSFC-FORM 232 REV. 8-21-89-MCL

MSFC MASTER BID DISK 11-18-2013

nProjects*4619*gj-3143268 - Replace Asbestos Siding*X2.dgn

ABBREVIATIONS

ABBREVIATIONS

ACM	ASBESTOS CONTAINING MATERIAL
ADJ	ADJUSTABLE
AFF	ABOVE FINISHED FLOOR
ALT	ALTERNATE
ALUM	ALUMINUM
BD	BOARD
BLKG	BLOCKING
CLG	CEILING
CLR	CLEAR (CLEARANCE)
CMU	CONCRETE MASONRY UNIT
COL	COLUMN
CONC	CONCRETE
CONT	CONTINUOUS
CORR	CORRUGATED
COTR	CONTRACTING OFFICER'S TECHNICAL REPRESENTATIVE
DBL	DOUBLE
DN	DOWN
DTL	DETAIL
DWG	DRAWING
EA	EACH
EXH	EXHAUST
EJ	EXPANSION JOINT
ELEC	ELECTRIC
ELEV	ELEVATION
EQ	EQUAL
EXIST	EXISTING
EXP	EXPANSION
EXT	EXTERIOR
FE	FIRE EXTINGUISHER
FFE	FINISH FLOOR ELEVATION
FIN	FINISH(ED)
FLR	FLOOR
FV	FIELD VERIFY
GA	GAUGE
GALV	GALVANIZED
GYP	GYPSUM
H	HIGH
HM	HOLLOW METAL
HT	HEIGHT
HORIZ	HORIZONTAL
ID	INSIDE DIAMETER
INSUL	INSULATION
LTA	LOAD TEST ANNEX
MFR	MANUFACTURER
MIN	MINIMUM
MISC	MISCELLANEOUS
MO	MASONRY OPENING
MTL	METAL
NIC	NOT IN CONTRACT
NTS	NOT TO SCALE
OC	ON CENTER
OPP HND	OPPOSITE HAND
OPNG	OPENING
OPP	OPPOSITE
PEMB	PRE-ENGINEERED METAL BUILDING
PT	PRESERVATIVE TREATED
PLYWD	PLYWOOD
R	RADIUS
REF	REFER
REINF	REINFORCEMENT
RM	ROOM
RO	ROUGH OPENING
SF	SQUARE FEET
SHT	SHEET
SIM	SIMILAR
SPEC	SPECIFICATIONS
SQ	SQUARE
STA	STATION
STL	STEEL
STRUCT	STRUCTURAL
TEMP	TEMPERED
THK	THICKNESS
TEL	TELEPHONE
TYP	TYPICAL
VERT	VERTICAL
WD	WOOD

GRAPHIC SYMBOLS

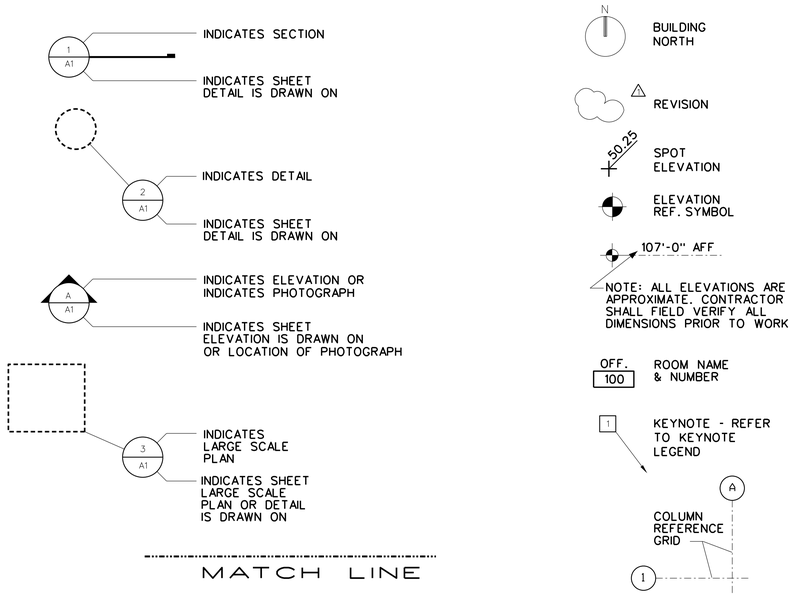

NOTE:
REFER TO SPECIFICATIONS SECTION 01001 FOR ADDITIONAL INFORMATION REGARDING BASE BID AND ADDITIVE ALTERNATES 1, 2, 3 AND 4.

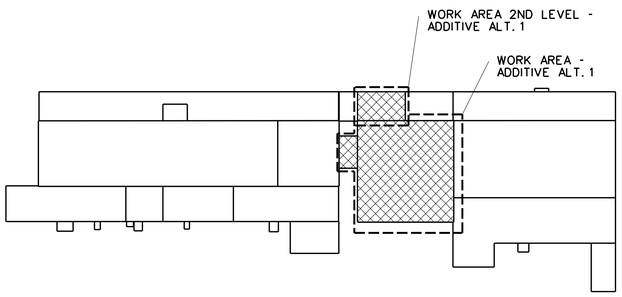

KEY PLAN – ADD. ALT. 1

KEY PLAN – ADD. ALT. 2

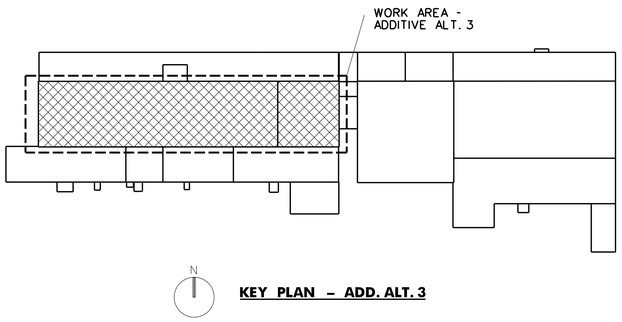

KEY PLAN – ADD. ALT. 3

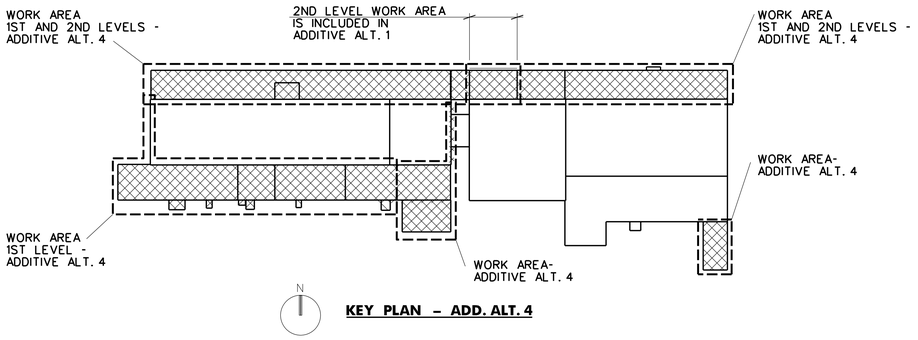

KEY PLAN – ADD. ALT. 4

MAINTAIN BUILDING ACCESS AND EGRESS

MAINTAIN ACCESS AND EGRESS FROM ALL EXITS TO GRADE LEVEL AT ALL STAGES OF DEMOLITION AND CONSTRUCTION. MINIMUM EGRESS WIDTHS SHALL BE AS WIDE AS THE EXIT DOORS THEY SERVE.

LEAD WARNING

COATINGS ON EXISTING STRUCTURAL STEEL AND STEEL WINDOWS CONTAIN LEAD. WORK SHALL COMPLY WITH CONTRACT DOCUMENTS AND ALL GOVERNING ENVIRONMENTAL AND HEALTH REGULATIONS.

LEGEND

WORK AREA

ASBESTOS WARNING

EXTERIOR WALL PANELS CONTAIN ASBESTOS. ASBESTOS CONTENT OF THE WALL PANELS IS NOT CONSIDERED FRIABLE. INSULATION AND MASTIC ON PIPING AND DUCTWORK CONTAIN ASBESTOS. ASBESTOS WORK SHALL COMPLY WITH SPECIFICATIONS, SECTION 02080 AND SHALL MEET ALL OSHA AND EPA REQUIREMENTS.

WARNING

DO NOT SCALE THIS DRAWING

THIS DRAWING WAS DESIGNED TO BE PRINTED AT A NASA SHEET SIZE: MSFC STD. SIZE 40" X 28"

PRELIMINARY CADD DWG.

CHANGES TO THIS DRAWING SHALL BE MADE ON CADD ONLY.

3143268 02-27-12 SGF

LATEST CADD UPDATE: 09-24-13 06:05 AM BY: ROB

REV.	BY	DATE	REVISION	C.I. NO.	APPROVED

Marshall Space Flight Center
Huntsville, Alabama 35812

WORK REQUEST NO. 3143268

BUILDING 4619
REPLACE ASBESTOS SIDING
(BUILDINGS 4755/4619)

ABBREVIATIONS, SYMBOLS, NOTES, KEY PLANS

AE FIRM: KAYA Associates, Inc.		NASA AE CONTRACT NO. NAS8- NNM11AA39C
SUBMITTED: DAVID A. SELLERS	APPROVAL RECOMMENDED: AD22 PROJECT A/E	APPROVED:
AE: DATE:	APPROVAL RECOMMENDED: AD22 SUPPORT A/E	AB22 GROUP LEAD DATE:
DESIGNED BARTON DRAWN BARTON CHECKED R. BARTON	APPROVAL RECOMMENDED: KAYA Associates, Inc	DRAWING NO. FAC-GJ-4755-X3
SCALE: AS NOTED	SPEC. NO. FAC#5052	

SIGNATURES ON INDEX SHEET INDICATE ACCEPTANCE OF THIS SHEET

REF. NO. X3 OF 3

MSFC-FORM 232 REV. 8-21-89-RCL

MSFC MASTER BID DISK 11-18-2013

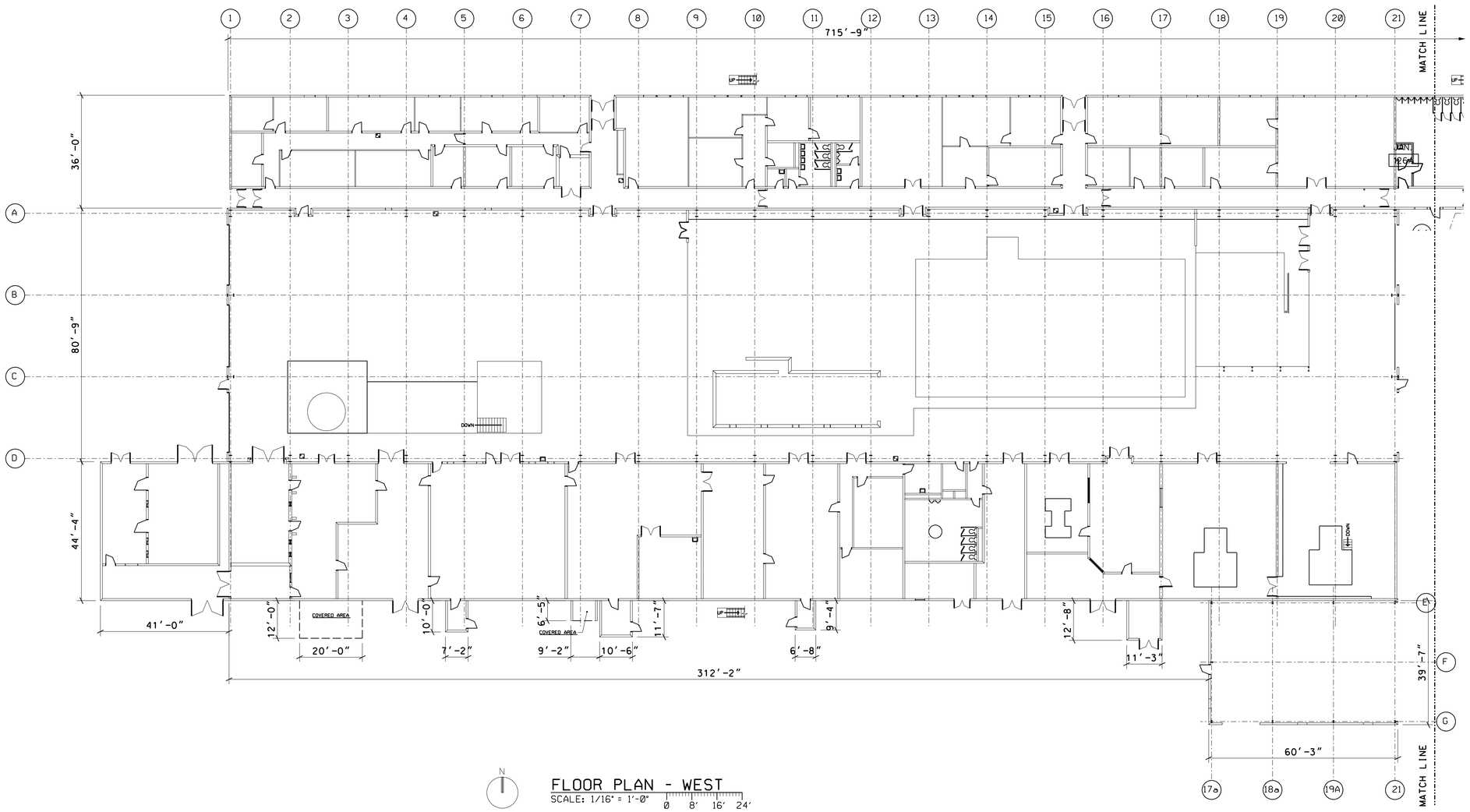

N

FLOOR PLAN - WEST

SCALE: 1/16″ = 1′-0″ 0 8′ 16′ 24′

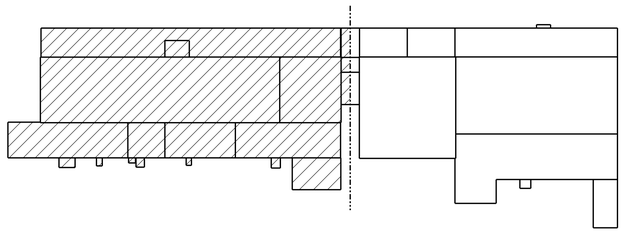

N

KEY PLAN

N.T.S.

WARNING

DO NOT SCALE THIS DRAWING

THIS DRAWING WAS DESIGNED TO BE PRINTED AT A NASA SHEET SIZE: MSFC STD. SIZE 40″ X 28″

PRELIMINARY CADD DWG.

CHANGES TO THIS DRAWING SHALL BE MADE ON CADD ONLY.

3143268 02-22-12 ROB — LATEST CADD UPDATE: 08-28-13 06:20 AM BY: ROB

REV.	BY	DATE	REVISION	C.I. NO.	APPROVED

Marshall Space Flight Center
Huntsville, Alabama 35812

WORK REQUEST NO. 3143268

BUILDING 4619
REPLACE ASBESTOS SIDING
(BUILDINGS 4755/4619)

ARCHITECTURAL: FLOOR PLAN - WEST

AE FIRM: KAYA Associates, Inc.

NASA AE CONTRACT NO. NAS8- NNM11AA39C

SUBMITTED: DAVID A. SELLERS

APPROVAL RECOMMENDED: AD22 PROJECT A/E

APPROVED:

AE: DATE:

APPROVAL RECOMMENDED: AD22 SUPPORT A/E

AD22 GROUP LEAD DATE:

DESIGNED BARTON
DRAWN BARTON
CHECKED DANIELL

APPROVAL RECOMMENDED: KAYA Associates, Inc.

SCALE: AS NOTED

SPEC. NO. FAC M5052

DRAWING NO. FAC-GJ-4619-AG.1

SIGNATURES ON INDEX SHEET INDICATE ACCEPTANCE OF THIS SHEET

REF. NO. AG.1 OF 2

MSFC-FORM 232 REV. 8-21-99-MCL

MSFC MASTER BID DISK 11-18-2013

Projects*4619*gj-3143268 - Replace Asbestos Siding*AG1.dgn

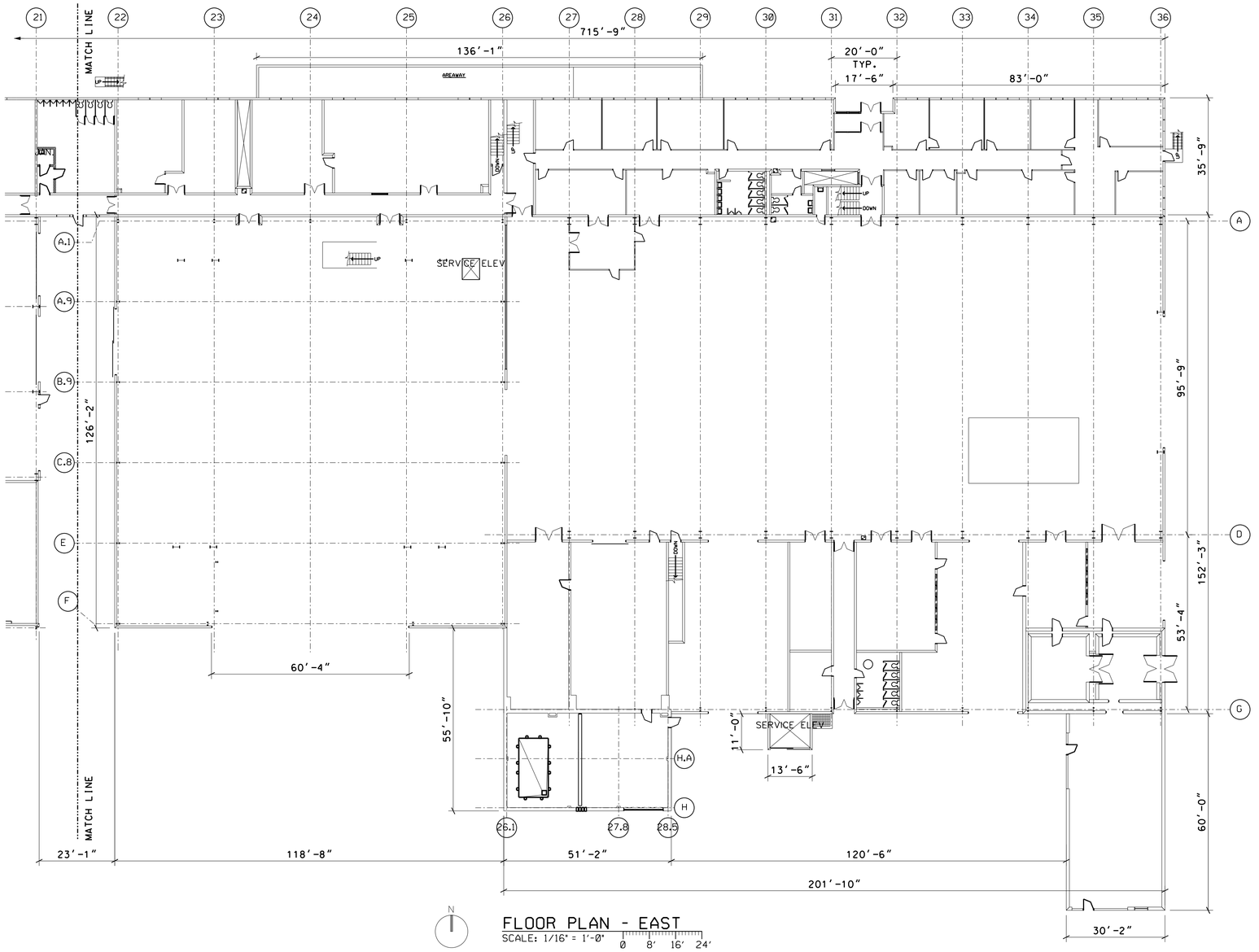

N

FLOOR PLAN - EAST

SCALE: 1/16" = 1'-0" 0 8' 16' 24'

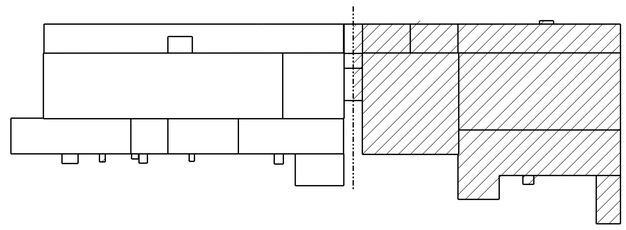

N

KEY PLAN

N.T.S.

WARNING

DO NOT SCALE THIS DRAWING

THIS DRAWING WAS DESIGNED TO BE PRINTED AT A NASA SHEET SIZE: MSFC STD. SIZE 40" X 28"

PRELIMINARY CADD DWG.

CHANGES TO THIS DRAWING SHALL BE MADE ON CADD ONLY.

3143268 02-27-12 ROB

LATEST CADD UPDATE: 08-28-13 06:21 AM BY: ROB

REV.	BY	DATE	REVISION	C.I. NO.	APPROVED

Marshall Space Flight Center
Huntsville, Alabama 35812

WORK REQUEST NO. 3143268

BUILDING 4619
REPLACE ASBESTOS SIDING
(BUILDINGS 4755/4619)

ARCHITECTURAL: FLOOR PLAN - EAST

AE FIRM: KAYA Associates, Inc.

NASA AE CONTRACT NO. NAS8- NNM11AA39C

SUBMITTED: DAVID A. SELLERS		APPROVAL RECOMMENDED: AD22 PROJECT A/E	APPROVED:
AE:	DATE:	APPROVAL RECOMMENDED: AD22 SUPPORT A/E	AD22 GROUP LEAD / DATE:
DESIGNED BARTON		APPROVAL RECOMMENDED: KAYA Associates, Inc.	DRAWING NO. FAC-GJ-4619-AG.2
DRAWN BARTON			
CHECKED DANIELL			
SCALE: AS NOTED		SPEC. NO. FAC M5052	

SIGNATURES ON INDEX SHEET INDICATE ACCEPTANCE OF THIS SHEET

REF. NO. AG.2 OF 2

MSFC-FORM 232 REV. 8-21-89-RCL

MSFC MASTER BID DISK 11-18-2013

Projects*4619*gj-3143268 - Replace Asbestos Siding*AG2.dgn

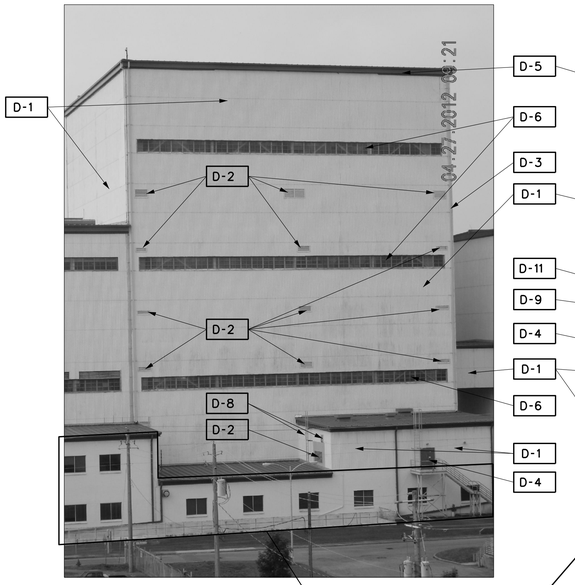

P1 A1.1 VIEW FROM NORTH - LTA
NOT TO SCALE

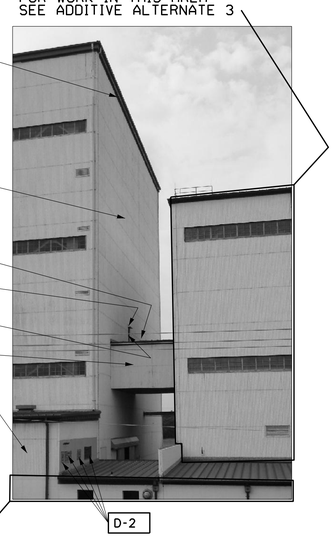

P2 A1.1 VIEW FROM NORTH - LTA
NOT TO SCALE

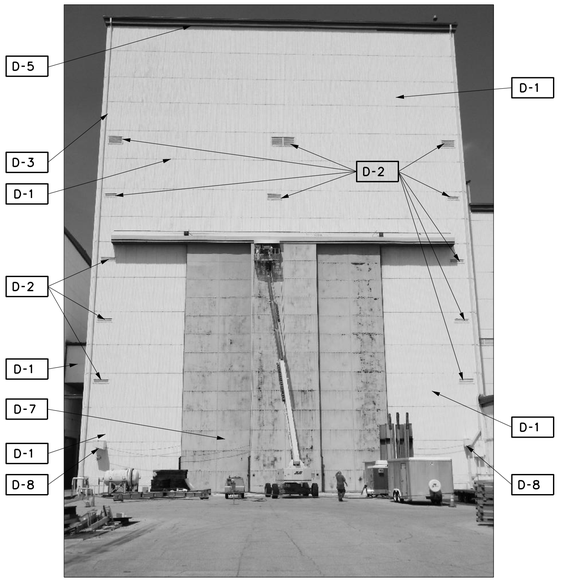

P3 A1.1 VIEW FROM SOUTH - LTA
NOT TO SCALE

GENERAL DEMOLITION NOTES
(ADDITIVE ALTERNATE 1)

1. CONTRACTOR SHALL BE RESPONSIBLE FOR ALL MATERIAL DISPOSAL.
2. ALL DIMENSIONS INDICATED HEREIN ARE APPROXIMATE AND SHALL BE FIELD-VERIFIED BY CONTRACTOR.
3. EXISTING BUILDING SIDING PANELS CONTAIN ASBESTOS. SEE SPECIFICATIONS REGARDING ASBESTOS CONTAINING MATERIALS (ACM).
4. CONTRACTOR SHALL FOLLOW GENERAL GUIDELINES OUTLINED IN SPECIFICATION SECTIONS 02050 AND 02080.
5. ALL ACM SHALL BE DISPOSED OF IN THE APPROVED ON-BASE FACILITY WHICH IS LOCATED WITHIN 5 MILES OF PROJECT.
6. THE CONTRACTOR SHALL NOTIFY THE CONTACTS LISTED IN SPECIFICATION SECTION 02080 AT LEAST 10 DAYS PRIOR TO ACM REMOVAL. CONTRACTOR SHALL COORDINATE ALL WORK WITH COTR AND BUILDING OCCUPANTS.
7. CONTRACTOR QUALIFICATIONS: THE ASBESTOS ABATEMENT CONTRACTOR OR GENERAL CONTRACTOR SHALL BE ACCREDITED IN THE STATE OF ALABAMA TO PERFORM ASBESTOS REMOVAL.
8. MAINTAIN EGRESS PATHS FROM ALL EXITS TO GRADE LEVEL AT ALL STAGES OF DEMOLITION AND CONSTRUCTION. MINIMUM EGRESS WIDTHS SHALL BE AS WIDE AS THE EXIT DOORS THEY SERVE.

ARCHITECTURAL DEMOLITION NOTES
(ADDITIVE ALTERNATE 1)

- D-1 REMOVE EXISTING CORRUGATED ASBESTOS SIDING AND ASSOCIATED SIDING MATERIALS. PREPARE FOR INSTALLATION OF NEW INSULATED SIDING. CLEAN PURLINS, COLUMNS AND OTHER SURFACES OF DUST, RESIDUE AND DEBRIS AFTER REMOVAL OF EXISTING SIDING AND PRIOR TO INSTALLATION OF NEW SIDING PANELS.
- D-2 REMOVE EXISTING LOUVERS AND SCREENS. SEE MECHANICAL/ELECTRICAL DRAWINGS.
- D-3 REMOVE EXISTING DOWNSPOUTS AND ASSOCIATED ACCESSORIES.
- D-4 EXISTING DOORS AND WINDOWS TO REMAIN.
- D-5 FLASH-IN TOP OF WALL PANELS AT ROOF EDGES AS REQUIRED FOR INSTALLATION OF NEW METAL WALL PANELS.
- D-6 REMOVE EXISTING STEEL FRAME INDUSTRIAL WINDOWS. PROTECT OPENINGS FROM ELEMENTS AFTER REMOVAL.
- D-7 NO WORK ON EXISTING HIGH-BAY DOOR.
- D-8 REMOVE EXISTING ELECTRICAL FIXTURES AND DEVICES AS DIRECTED BY MECHANICAL/ELECTRICAL DRAWINGS.
- D-9 REMOVE EXISTING CANOPY.
- D-10 NOT USED.
- D-11 TWO CONDENSER UNITS ARE PLANNED TO BE INSTALLED ON THE WALL ABOVE THE CONNECTOR ROOF BY OTHERS. INSTALLATION OF CONDENSING UNITS HAVE NOT BEEN INSTALLED AT THE TIME OF THIS DESIGN. DESIGN DRAWINGS, FAC-GS-4619, ARE INCLUDED AS PART OF THE INFORMATION TO BIDDERS. VERIFY SITE CONDITIONS AND COORDINATE WITH THE COTR PRIOR TO BIDDING.

LEAD WARNING

COATINGS ON EXISTING STRUCTURAL STEEL AND STEEL WINDOWS CONTAIN LEAD. WORK SHALL COMPLY WITH CONTRACT DOCUMENTS AND ALL GOVERNING ENVIRONMENTAL AND HEALTH REGULATIONS.

ASBESTOS WARNING

EXTERIOR WALL PANELS CONTAIN ASBESTOS. ASBESTOS CONTENT OF THE WALL PANELS IS NOT CONSIDERED FRIABLE. INSULATION AND MASTIC ON PIPING AND DUCTWORK CONTAIN ASBESTOS. ASBESTOS WORK SHALL COMPLY WITH SPECIFICATIONS, SECTION 02080 AND SHALL MEET ALL OSHA AND EPA REQUIREMENTS.

WORK DESCRIBED ON THIS SHEET
APPLIES TO ADDITIVE ALTERNATE 1

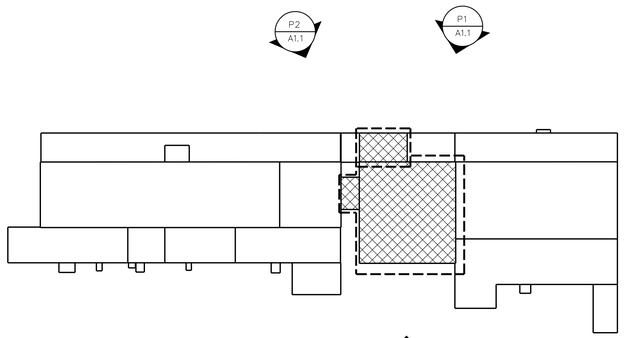

PHOTO KEY PLAN
NOT TO SCALE

WARNING
DO NOT SCALE THIS DRAWING
THIS DRAWING WAS DESIGNED TO BE PRINTED AT A NASA SHEET SIZE: MSFC STD. SIZE 40" X 28"

PRELIMINARY CADD DWG.
CHANGES TO THIS DRAWING SHALL BE MADE ON CADD ONLY.
3143268 04-11-12 SGF
LATEST CADD UPDATE: 10-28-13 01:30 PM
BY: ROB

REV.	BY	DATE	REVISION	C.I. NO.	APPROVED

Marshall Space Flight Center
Huntsville, Alabama 35812

WORK REQUEST NO. 3143268

BUILDING 4619
REPLACE ASBESTOS SIDING
(BUILDINGS 4755/4619)
DEMOLITION: PHOTOGRAPHS, NOTES

AE FIRM: KAYA Associates, Inc.
NASA AE CONTRACT NO. NAS8- NNM11AA39C

SUBMITTED: DAVID A. SELLERS		APPROVAL RECOMMENDED: AD22 PROJECT A/E	APPROVED:
AE: DATE:		APPROVAL RECOMMENDED: AD22 SUPPORT A/E	AD22 GROUP LEAD DATE:
DESIGNED BARTON		APPROVAL RECOMMENDED: KAYA Associates, Inc.	DRAWING NO. FAC-GJ-4619-A1.1
DRAWN BARTON			
CHECKED DANIELL			
SCALE: AS NOTED		SPEC. NO. FAC M5052	

SIGNATURES ON INDEX SHEET INDICATE ACCEPTANCE OF THIS SHEET

REF. NO. A1.1 OF 7

MSFC-FORM 232 REV. 8-21-89-MOD.

MSFC MASTER BID DISK 11-18-2013

Projects*4619*gj-3143268 - Replace Asbestos Siding*A1-1.dgn

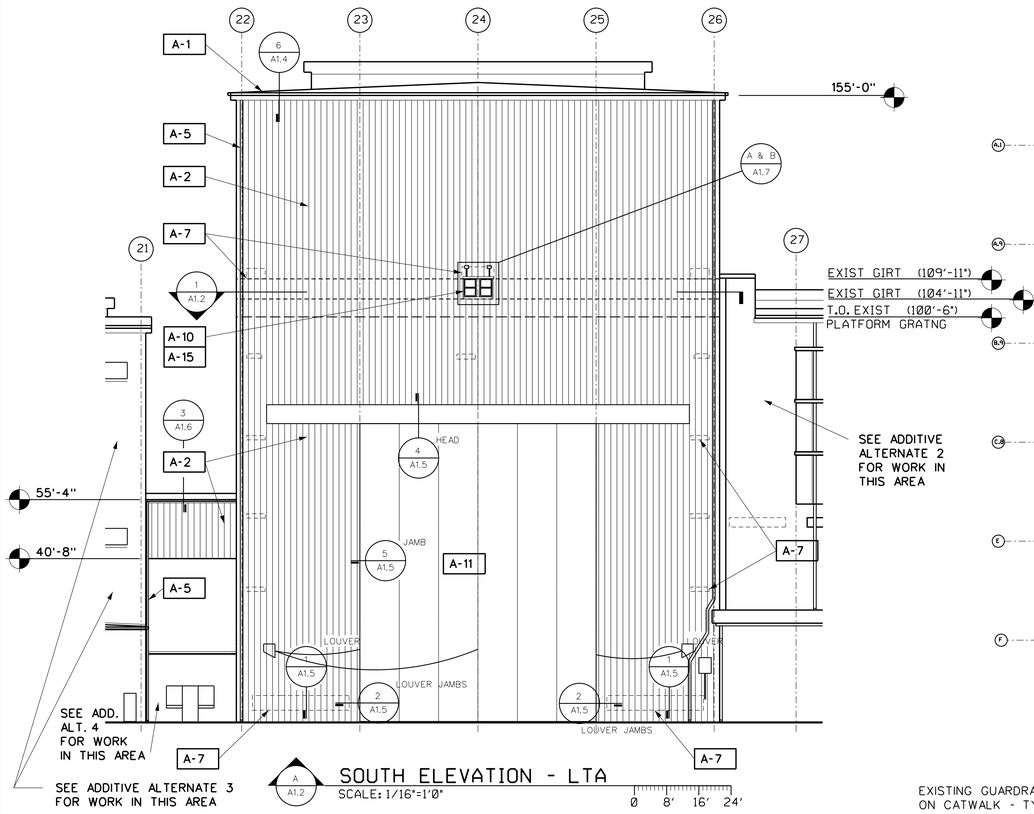

A A1.2 SOUTH ELEVATION - LTA
SCALE: 1/16"=1'0"
0 8' 16' 24'

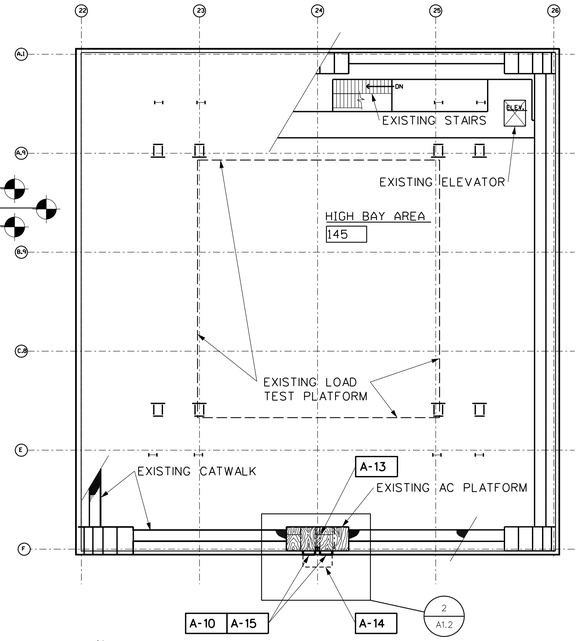

N

1 A1.2 HIGH-BAY 145 FLOOR PLAN
CATWALK LEVEL 6 - LTA
SCALE: 1/16"=1'0"
0 8' 16' 24'

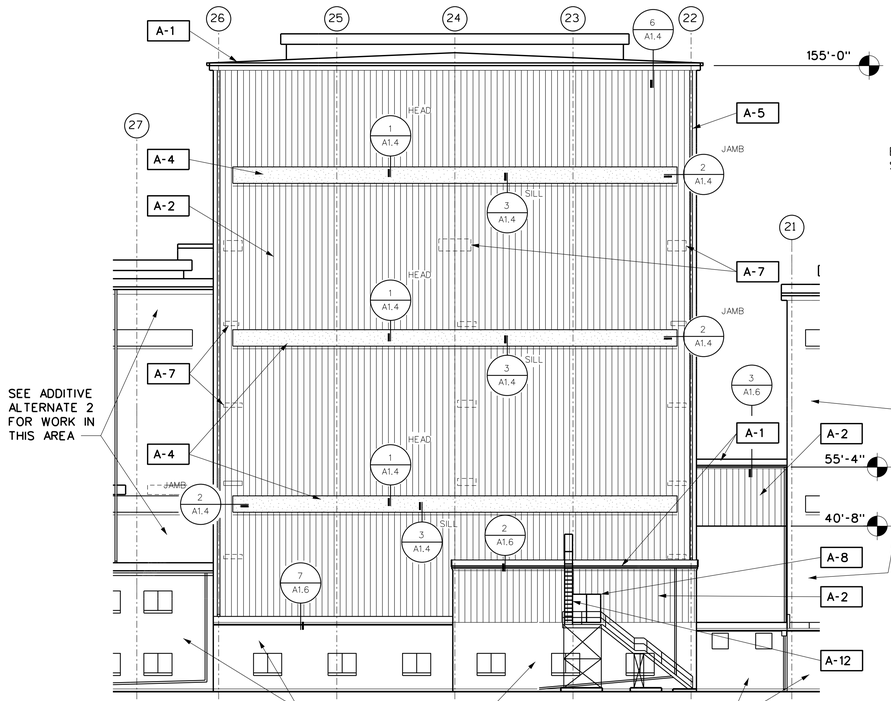

B A1.2 NORTH ELEVATION - LTA
SCALE: 1/16"=1'0"
0 8' 16' 24'

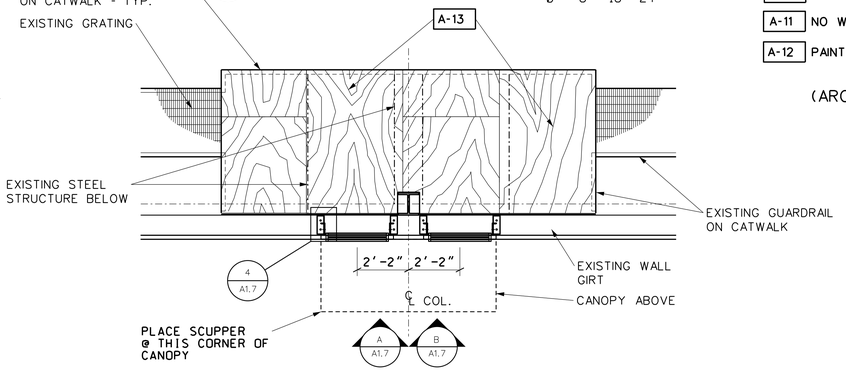

2 A1.2 ENLARGED PLAN
SCALE: 3/8"=1'0"
0 1' 2' 3' 4'

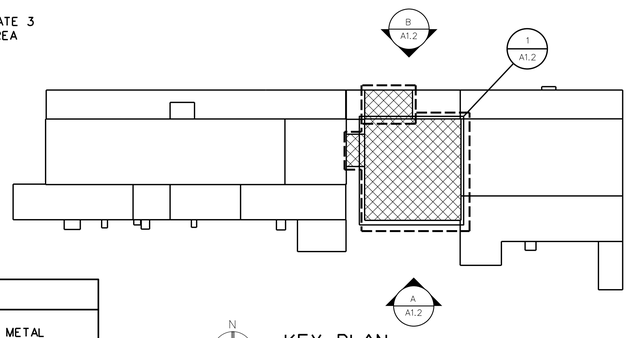

N
KEY PLAN
NOT TO SCALE

LEGEND
- INSULATED METAL PANELS
- TRANSLUCENT PANELS

GENERAL NOTES
(ADDITIVE ALTERNATE 1)

A. CONTRACTOR SHALL MAINTAIN SCHEDULE. COORDINATE PROJECT WITH COTR FOR PROPER ORDER OF INSTALLATION AND ENSURE ALL EQUIPMENT AND FINISHES ARE PROTECTED AT ALL TIMES.

B. VERIFY ALL DIMENSIONS AND CONDITIONS AT THE SITE PRIOR TO BIDDING AND CONSTRUCTION.

C. REPAIR OR REPLACE ALL WORK DAMAGED DUE TO DEMOLITION OR CONSTRUCTION TO PRODUCE A COMPLETELY FINISHED JOB.

D. ALL MATERIAL IS SPECIFIED ON AN "APPROVED EQUAL" BASIS UNLESS OTHERWISE NOTED. APPROVAL WILL BE BY THE COTR.

E. ALL MATERIAL SPECIFIED SHALL BE INSTALLED IN ACCORDANCE WITH THE MANUFACTURER'S WRITTEN INSTRUCTIONS UNLESS OTHERWISE SHOWN.

F. ALL DETAILS AND SECTIONS SHOWN ON THE DRAWINGS ARE TYPICAL AND SHALL APPLY TO SIMILAR SITUATIONS THROUGHOUT THE ENTIRE PROJECT.

G. ELEVATIONS DO NOT SHOW ALL PENETRATIONS FOR CLARITY. REFER TO DEMOLITION PHOTOGRAPHS AND FIELD OBSERVATIONS TO CONFIRM FULL EXTENT OF PENETRATIONS AND OBSTRUCTIONS.

H. THE BUILDING WILL BE OCCUPIED DURING THIS WORK. THE CONTRACTOR, AND ALL WORKERS, SHALL COORDINATE THEIR WORK TO MINIMIZE IMPACT TO THOSE USING THE BUILDING AND NORMAL FUNCTIONS OF THE BUILDING.

I. MAINTAIN EGRESS PATHS FROM ALL EXITS TO GRADE LEVEL. AT ALL STAGES OF DEMOLITION AND CONSTRUCTION. MINIMUM EGRESS WIDTHS SHALL BE AS WIDE AS THE EXIT DOORS THEY SERVE.

ARCHITECTURAL NOTES
(ADDITIVE ALTERNATE 1)

- A-1 EXISTING ROOF TO REMAIN.
- A-2 PROVIDE INSULATED METAL PANELS.
- A-3 PROVIDE LOUVERS (TYPICAL) -SEE MECHANICAL.
- A-4 PROVIDE TRANSLUCENT PANELS.
- A-5 PROVIDE NEW DOWNSPOUTS AT LOCATIONS WHERE EXISTING DOWNSPOUTS WERE DESIGNATED FOR REMOVAL-TYPICAL.
- A-6 NOT USED.
- A-7 REMOVE EXISTING SHEET METAL COVER, WHEN PRESENT, AND INSTALL SIDING OVER EXISTING LOUVERS. UNLESS OTHERWISE NOTED.
- A-8 PAINT EXISTING DOOR AND FRAME -INSIDE AND OUTSIDE. MATCH EXISTING COLOR SCHEME.
- A-9 AFTER SIDING IS INSTALLED, REINSTALL EXISTING BUILDING SIGNAGE. REPLACE DAMAGED SIGNAGE WITH NEW. MATCH IN-KIND (TYPICAL).
- A-10 MODIFY BUILDING FRAMING AND PROVIDE TWO SINGLE HUNG WINDOWS.
- A-11 NO WORK ON HIGH-BAY DOOR.
- A-12 PAINT EXISTING STEEL LADDER AND SUPPORTS.

(ARCHITECTURAL NOTES CONTINUED ON SHEET A1.3)

WORK DESCRIBED ON THIS SHEET APPLIES TO ADDITIVE ALTERNATE 1

WARNING
DO NOT SCALE THIS DRAWING
THIS DRAWING WAS DESIGNED TO BE PRINTED AT A NASA SHEET SIZE: MSFC STD. SIZE 40" X 28"

PRELIMINARY CADD DWG.
CHANGES TO THIS DRAWING SHALL BE MADE ON CADD ONLY.
3143268 06-25-12 ROB
LATEST CADD UPDATE: 09-24-13 06:25 AM BY: ROB

REV.	BY	DATE	REVISION	C.J. NO.	APPROVED

Marshall Space Flight Center
Huntsville, Alabama 35812

WORK REQUEST NO. 3143268

BUILDING 4619
REPLACE ASBESTOS SIDING
(BUILDINGS 4755/4619)
ARCHITECTURAL: ELEVATIONS, NOTES

AE FIRM: KAYA Associates, Inc.
NASA AE CONTRACT NO. NAS8- NNM11AA39C

SUBMITTED: DAVID A. SELLERS
APPROVAL RECOMMENDED: AD22 PROJECT A/E
APPROVED:
AE: DATE:
APPROVAL RECOMMENDED: AD22 SUPPORT A/E
AB22 GROUP LEAD DATE:
DESIGNED BARTON
DRAWN BARTON
CHECKED DANIELL
APPROVAL RECOMMENDED: KAYA Associates, Inc.
SCALE: AS NOTED
SPEC. NO. FAC M5052
DRAWING NO. FAC-GJ-4619-A1.2

SIGNATURES ON INDEX SHEET INDICATE ACCEPTANCE OF THIS SHEET

REF. NO. A1.2 OF 7

MSFC-FORM 232 REV. 8-21-89-RCL

MSFC MASTER BID DISK 11-18-2013

Projects*4619*gj-3143268 - Replace Asbestos Siding*A1-2.dgn

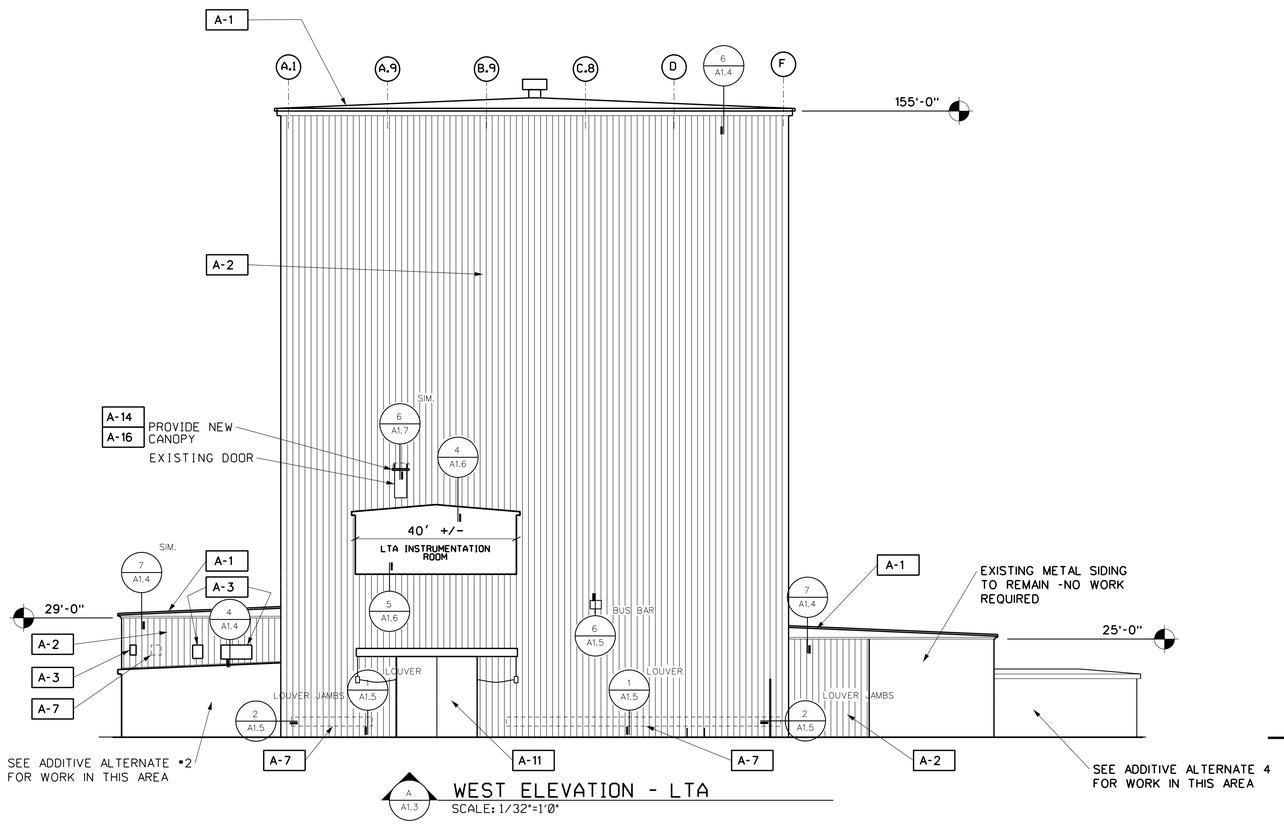

A A1.3 WEST ELEVATION - LTA
SCALE: 1/32"=1'0"

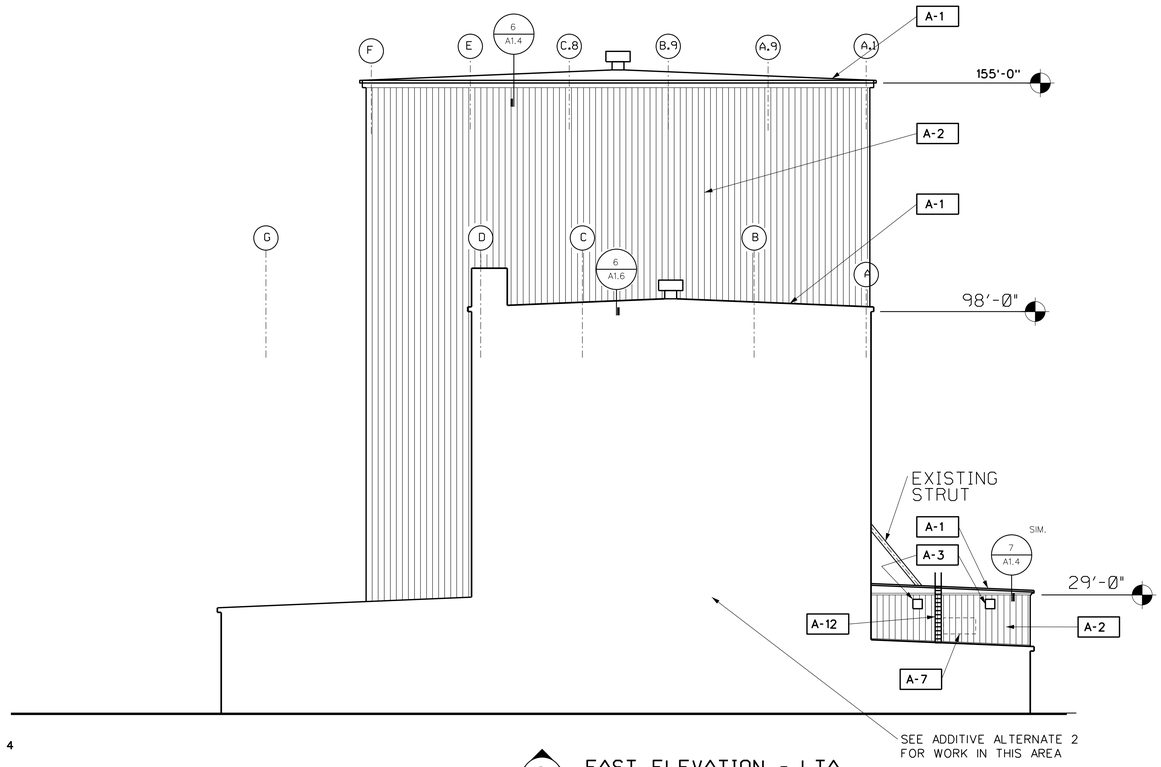

B A1.3 EAST ELEVATION - LTA
SCALE: 1/32"=1'0"

ARCHITECTURAL NOTES CONTINUED FROM SHEET A1.2
(ADDITIVE ALTERNATE 1)

A-13 PROVIDE 1/2" FIRE RETARDANT TREATED PLYWOOD ON EXISTING STEEL GRATING. ATTACH TO GRATING WITH 3/8" STAINLESS STEEL TOGGLE BOLTS OF APPROPRIATE LENGTH. SPACE FASTENERS 16" O.C. EACH WAY. USE LOCKING NUTS TO SECURE TOGGLES TO BOLTS. COUNTER-SINK TOGGLE BOLT HEADS FLUSH WITH TOP OF PLYWOOD. BUTT SEAMS TIGHT. PROVIDE ADDITIONAL FASTENERS WHERE REQUIRED TO FLUSH PLYWOOD SEAMS AND TO ENSURE PLYWOOD IS HELD TIGHT AND FLAT AGAINST GRATING. FIRE RETARDANT TREATMENT SHALL NOT BE REACTIVE WHEN IN CONTACT WITH STEEL.

A-14 PROVIDE ALUMINUM, PREFABRICATED, PREFINISHED AND PREENGINEERED CANOPY SYSTEM COMPLETE. SYSTEM FEATURES SHALL INCLUDE:
-ANODIZED ALUMINUM COMPONENTS
-HEAVY-DUTY OVERHEAD SUPPORTS
FLAT PAN ROOF PANELS
-MITERED REINFORCED CORNERS
-INTEGRAL GUTTER
ROUTE RAINWATER SHALL DRAIN FROM AN INTEGRAL SCUPPER POSITIONED ON THE CORNER OF THE CANOPY, WHERE SHOWN ON "ENLARGED PLAN" (2/A1.2). ATTACH CANOPY TO THE BUILDING FRAMING AS SHOWN USING CORROSION RESISTANT FASTENERS RECOMMENDED BY THE MANUFACTURER. CANOPY SHALL BE EQUAL TO HEAVY-DUTY OVERHEAD SUPPORT CANOPY SYSTEM AND COMPONENTS BY SUPERIOR METAL PRODUCTS, INC., 116 CITATION COURT, BIRMINGHAM, AL 35209. TELEPHONE 877-445-1200. OTHER MANUFACTURER'S SYSTEMS WILL BE CONSIDERED FOR SUBSTITUTION. PROVIDE DETAILS, MANUFACTURER'S INSTALLATION & CATALOG DATA.

A-15 WINDOWS: EQUAL TO "KAWNEER" ISOLOCK, THERMAL SINGLE-HUNG WINDOW. WINDOW GLAZING: 1" OVERALL THICKNESS, CLEAR, LAMINATED SAFETY GLASS - TYPICAL ALL PANES. APPROXIMATE OVERALL SIZE: 36" X 54". PROVIDE ARCHITECTURAL CLEAR ANODIZED FRAME. PROVIDE SILL OPTION FOR 15 PSF WATER RESISTANCE MANUFACTURER: KAWNEER COMPANY, INC., 555 GUTHRIDGE CT., TECHNOLOGY PARK/ATLANTA, NORCROSS, GA 30092: 770-449-5555: KAWNEER.COM.

A-16 FABRICATE COVER PLATE FROM PRE-FINISHED 22 GAUGE METAL MATCHING THE WALL PANEL FACE IN COLOR AND FINISH. FILL SIDING JOINTS BEHIND COVER PLATE WITH URETHANE SEALANT. PROVIDE BUTYL SEALANT TAPE TO TOP EDGE, SIDE EDGES OF PLATE AND HOLE PERIMETERS. ATTACH PLATE TO SIDING WITH RIVETS OR TRIM SCREWS AT 3-INCHES ON CENTER SPACING SET THROUGH SEALANT TAPE. FILL THE SPACE AROUND EACH PENETRATION WITH FIELD APPLIED FOAM INSULATION FROM INTERIOR SIDE OF THE PANEL. FOAM SHALL BE COMPATIBLE WITH PANEL INSULATION. PLATE SHALL COVER OPENINGS WITH A MINIMUM 2-INCH CLEARANCE IN ALL DIRECTIONS. THE OPENINGS FOR THE PENETRATIONS SHALL HAVE A MAXIMUM CLEARANCE OF 1/8-INCH ALL AROUND. SEAL THE OPENINGS WITH A CONTINUOUS 3/8-INCH FILLET BEAD OF URETHANE SEALANT. SEALANT SHALL BE COLOR MATCHED TO EXTERIOR SIDING. SEE DETAILS 1/A1.6, 7/A1.7 & 5/A1.7.

COLOR SCHEME:

THE COLOR SCHEME TO BE USED WILL LOOK MUCH LIKE THE EXISTING. FINAL COLOR OF PRE-FINISHED PANELS AND TRIM WILL BE SELECTED BY THE COTR FROM THE PANEL MANUFACTURER'S STANDARD COLORS. PAINT COLORS WILL BE SELECTED BASED ON THE PANELS AND TRIM COLORS ACTUALLY SELECTED FOR USE.

METAL PANELS: THERE WILL BE ONE COLOR OF INSULATED METAL PANELS.

METAL TRIM COLORS: THERE WILL BE TWO COLORS USED.

TRIM COLOR 1. TRIM TO MATCH PANEL COLOR. DOWNSPOUTS TO MATCH PANEL COLOR.
TRIM COLOR 2. SOME OR MOST OF THE TRIM AT EAVES, FASCIA, SOFFIT AND GUTTERS WILL BE THE CLOSEST BLUE FROM THE MANUFACTURER'S STANDARD COLORS TO BLUE ROOF CURRENTLY ON THE BUILDING.

PAINT COLORS: ITEMS TO BE PAINTED SHALL MATCH EXISTING COLORS AS PRACTICABLE. SUBMIT COLOR SAMPLES FOR AREAS THAT SUFFER FROM EXCESSIVE FADING AND PAINT DEGRADATION.

LEGEND

	INSULATED METAL PANELS
	TRANSLUCENT PANELS

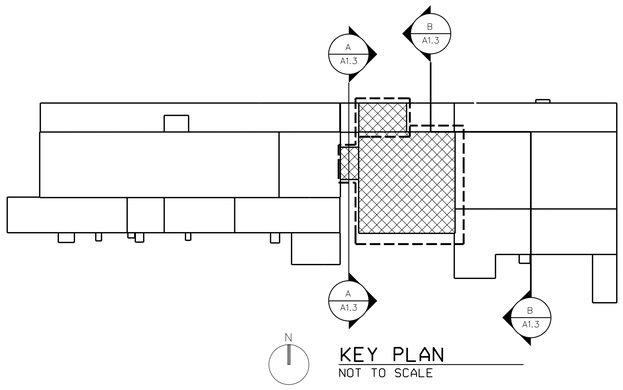

KEY PLAN
NOT TO SCALE

WORK DESCRIBED ON THIS SHEET APPLIES TO ADDITIVE ALTERNATE 1

WARNING
DO NOT SCALE THIS DRAWING
THIS DRAWING WAS DESIGNED TO BE PRINTED AT A NASA SHEET SIZE: MSFC STD. SIZE 40" X 28"

PRELIMINARY CADD DWG.
CHANGES TO THIS DRAWING SHALL BE MADE ON CADD ONLY.
3143268 06-25-12 ROB
LATEST CADD UPDATE: 08-28-13 01:21 PM BY: ROB

REV.	BY	DATE	REVISION	C.I. NO.	APPROVED

Marshall Space Flight Center
Huntsville, Alabama 35812

WORK REQUEST NO. 3143268

BUILDING 4619
REPLACE ASBESTOS SIDING
(BUILDINGS 4755/4619)
ARCHITECTURAL: ELEVATIONS

AE FIRM: KAYA Associates, Inc.
NASA AE CONTRACT NO. NASB- NNM11AA39C

SUBMITTED: DAVID A. SELLERS		APPROVAL RECOMMENDED: AD22 PROJECT A/E	APPROVED:
AE:	DATE:	APPROVAL RECOMMENDED: AD22 SUPPORT A/E	AB22 GROUP LEAD / DATE:
DESIGNED BARTON		APPROVAL RECOMMENDED: KAYA Associates, Inc.	DRAWING NO. FAC-GJ-4619-A1.3
DRAWN BARTON			
CHECKED DANIELL			
SCALE: AS NOTED		SPEC. NO. FAC M5052	

SIGNATURES ON INDEX SHEET INDICATE ACCEPTANCE OF THIS SHEET

REF. NO. A1.3 OF 7

MSFC-FORM 232 REV. 8-21-89-RCL

MSFC MASTER BID DISK 11-18-2013

Projects*4619*gj-3143268 - Replace Asbestos Siding*A1-3.dgn

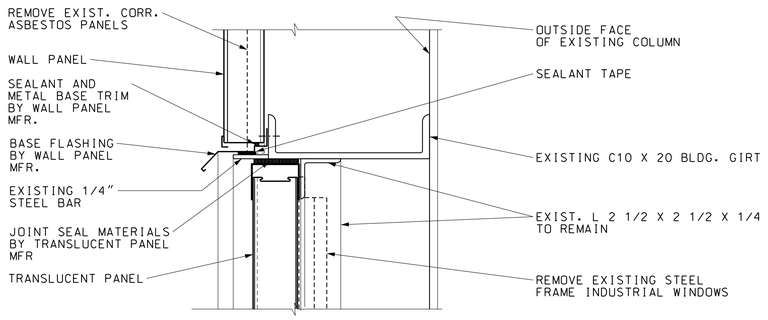

1 / A1.4 HEAD - TRANSLUCENT PANEL DETAIL
SCALE: 3" = 1'-0" 0 2" 4" 6" 8"

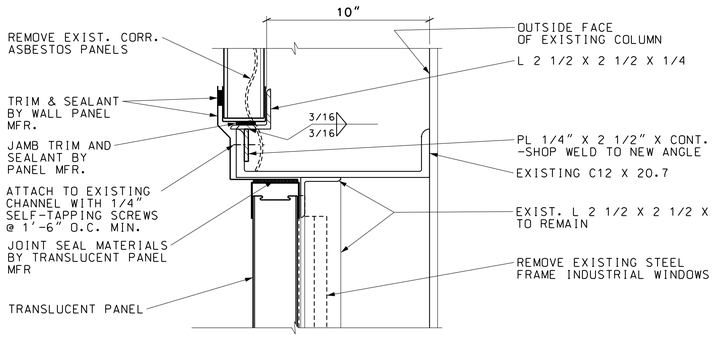

2 / A1.4 JAMB - TRANSLUCENT PANEL DETAIL
SCALE: 3" = 1'-0" 0 2" 4" 6" 8"

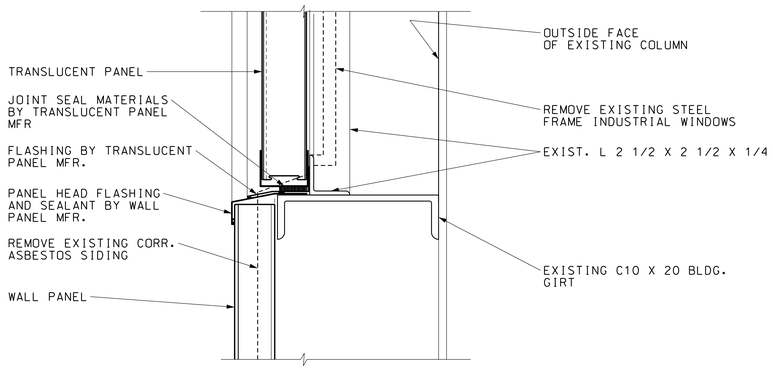

3 / A1.4 SILL - TRANSLUCENT PANEL DETAIL
SCALE: 3" = 1'-0" 0 2" 4" 6" 8"

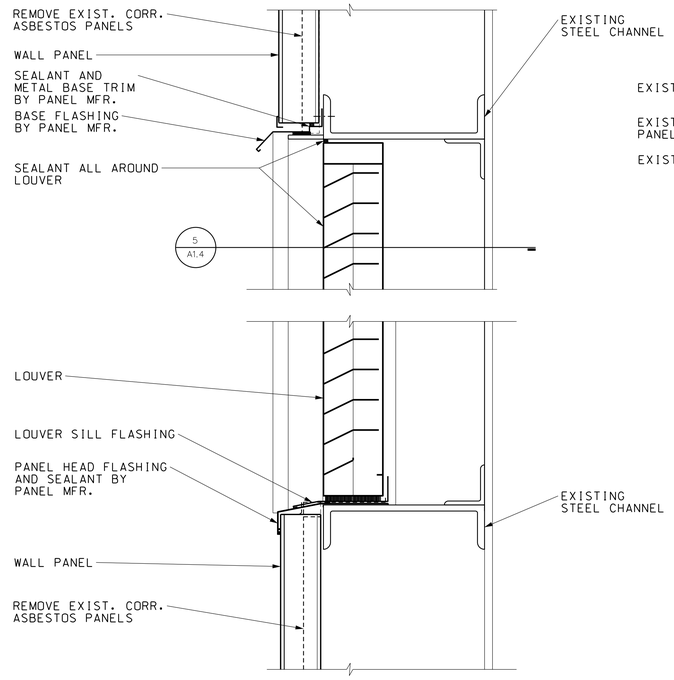

4 / A1.4 SECTION - LOUVER
SCALE: 3" = 1'-0" 0 2" 4" 6" 8"

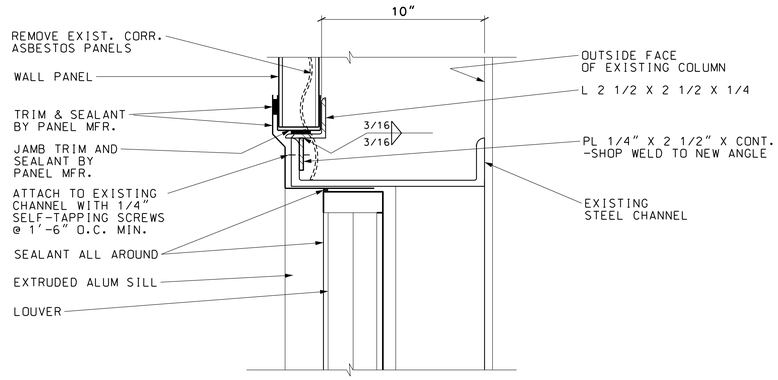

5 / A1.4 JAMB DETAIL - LOUVER
SCALE: 3" = 1'-0" 0 2" 4" 6" 8"

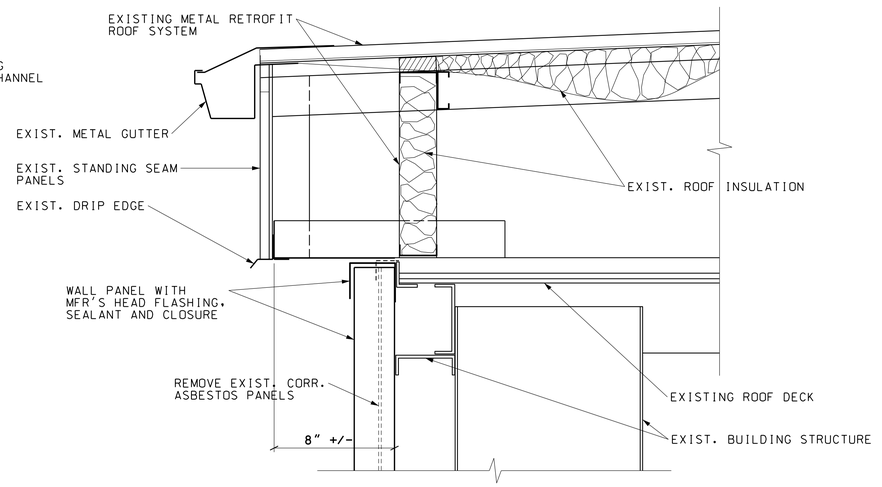

6 / A1.4 EAVE DETAIL
SCALE: 3" = 1'-0" 0 2" 4" 6" 8"

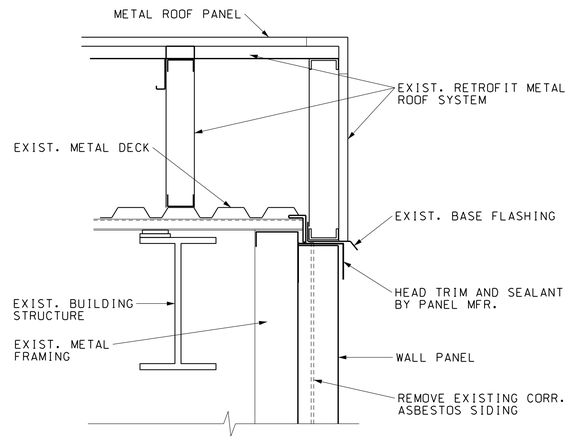

7 / A1.4 RAKE DETAIL
SCALE: 3" = 1'-0" 0 2" 4" 6" 8"

WORK DESCRIBED ON THIS SHEET APPLIES TO ADDITIVE ALTERNATE 1

WARNING
DO NOT SCALE THIS DRAWING
THIS DRAWING WAS DESIGNED TO BE PRINTED AT A NASA SHEET SIZE: MSFC STD. SIZE 40" X 28"

PRELIMINARY CADD DWG.
CHANGES TO THIS DRAWING SHALL BE MADE ON CADD ONLY.
3143268 08-31-12 ROB
LATEST CADD UPDATE: 10-22-13 03:05 PM BY: ROB

REV.	BY	DATE	REVISION	C.N. NO.	APPROVED

Marshall Space Flight Center
Huntsville, Alabama 35812

WORK REQUEST NO. 3143268

BUILDING 4619
REPLACE ASBESTOS SIDING
(BUILDINGS 4755/4619)
ARCHITECTURAL: TRANSLUCENT PANEL, LOUVER DETAILS

AE FIRM: KAYA Associates, Inc.
NASA AE CONTRACT NO. NAS8- NNM11AA39C

SUBMITTED: DAVID A. SELLERS		APPROVAL RECOMMENDED: AD22 PROJECT A/E	APPROVED:
AE:	DATE:	APPROVAL RECOMMENDED: AD22 SUPPORT A/E	AB22 GROUP LEAD / DATE:
DESIGNED BARTON		APPROVAL RECOMMENDED: KAYA Associates, Inc.	DRAWING NO. FAC-GJ-4619-A1.4
DRAWN BARTON			
CHECKED DANIELL			
SCALE: AS NOTED		SPEC. NO. FAC M5052	

SIGNATURES ON INDEX SHEET INDICATE ACCEPTANCE OF THIS SHEET

REF. NO. A1.4 OF 7

MSFC-FORM 232 REV. 8-21-84-RCL

MSFC MASTER BID DISK 11-18-2013

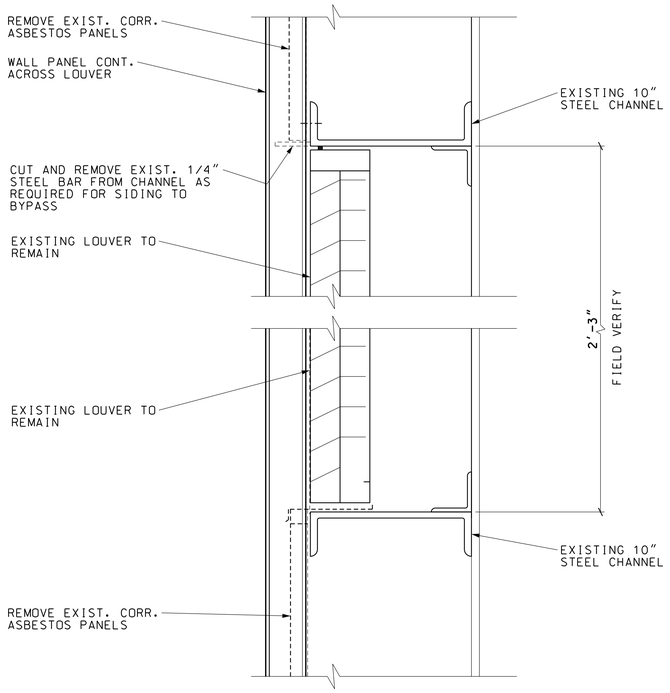

1 A1.5 SECTION - LOUVER
SCALE: 3" = 1'-0"
0 2" 4" 6" 8"

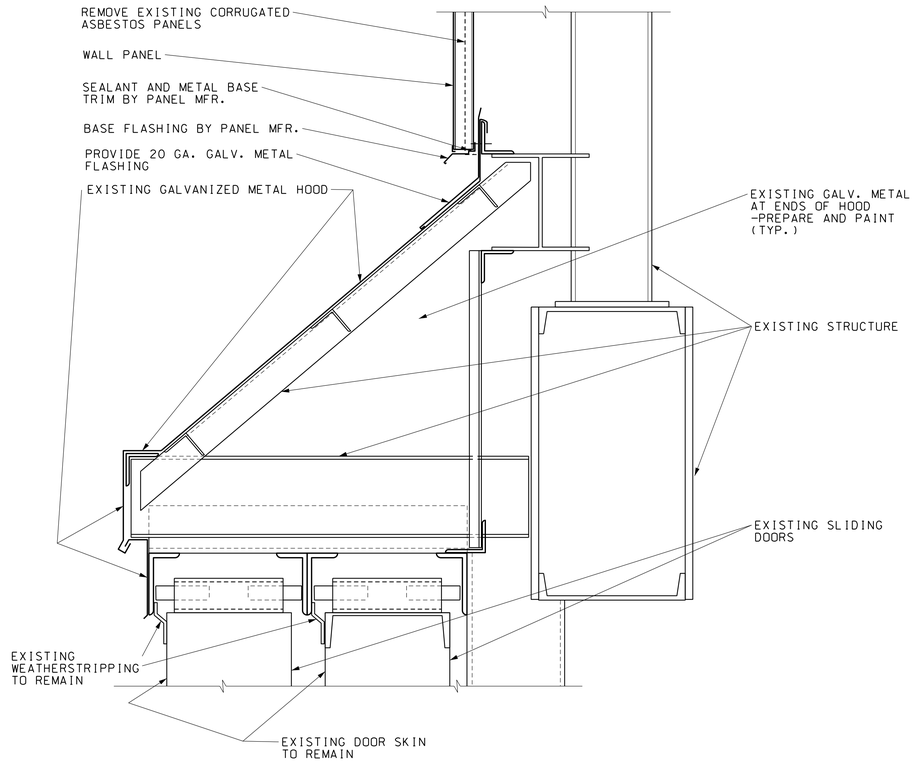

4 A1.5 SLIDING DOOR HEAD
SCALE: 1 1/2" = 1'-0"
0 6" 1'

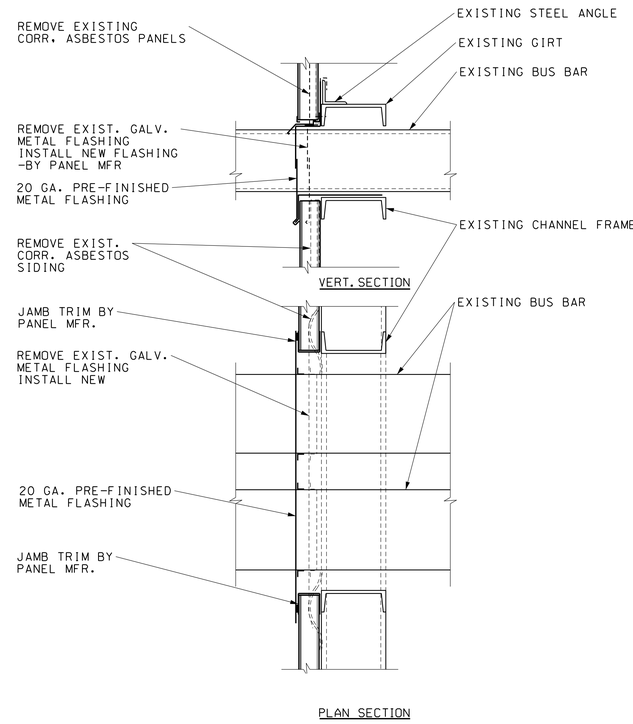

6 A1.5 BUS BAR PENETRATION
SCALE: 1 1/2" = 1'-0"
0 6" 1'

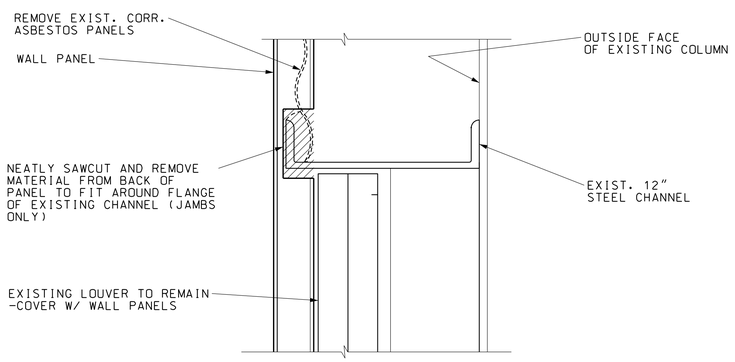

2 A1.5 JAMB DETAIL - LOUVER
SCALE: 3" = 1'-0"
0 2" 4" 6" 8"

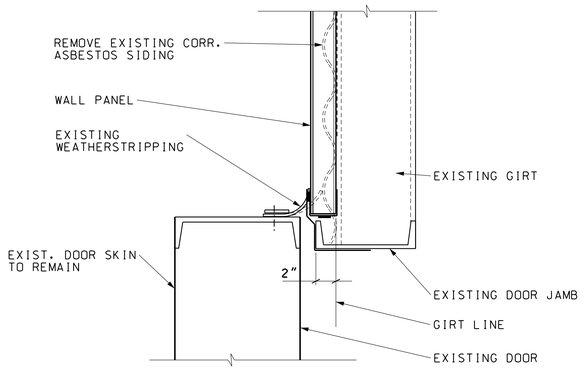

5 A1.5 SLIDING DOOR JAMB
SCALE: 1 1/2" = 1'-0"
0 6" 1'

3 A1.5 NOT USED

WORK DESCRIBED ON THIS SHEET APPLIES TO ADDITIVE ALTERNATE 1

WARNING
DO NOT SCALE THIS DRAWING
THIS DRAWING WAS DESIGNED TO BE PRINTED AT A NASA SHEET SIZE: MSFC STD. SIZE 40" X 28"

PRELIMINARY CADD DWG.
CHANGES TO THIS DRAWING SHALL BE MADE ON CADD ONLY.
3143268
09-05-12 ROB
LATEST CADD UPDATE: 08-28-13 06:35 AM
BY: ROB

REV.	BY	DATE	REVISION	C.J. NO.	APPROVED

Marshall Space Flight Center
Huntsville, Alabama 35812

WORK REQUEST NO. 3143268

BUILDING 4619
REPLACE ASBESTOS SIDING
(BUILDINGS 4755/4619)
ARCHITECTURAL: LOUVER, SLIDING DOOR DETAILS

AE FIRM: KAYA Associates, Inc.
NASA AE CONTRACT NO. NASS- NNM11AA39C

SUBMITTED: DAVID A. SELLERS
APPROVAL RECOMMENDED: AD22 PROJECT A/E
APPROVED: AB22 GROUP LEAD DATE:
AE: DATE:
APPROVAL RECOMMENDED: AD22 SUPPORT A/E
DESIGNED BARTON
DRAWN BARTON
CHECKED DANIELL
APPROVAL RECOMMENDED: KAYA Associates, Inc.
SCALE: AS NOTED
SPEC. NO. FAC M5052

SIGNATURES ON INDEX SHEET INDICATE ACCEPTANCE OF THIS SHEET

REF. NO. A1.5 OF 7

DRAWING NO. FAC-GJ-4619-A1.5

MSFC-FORM 232 REV. 8-21-89-RCL

MSFC MASTER BID DISK 11-18-2013

Projects*4619*gj-3143268 - Replace Asbestos Siding*A1-5.dgn

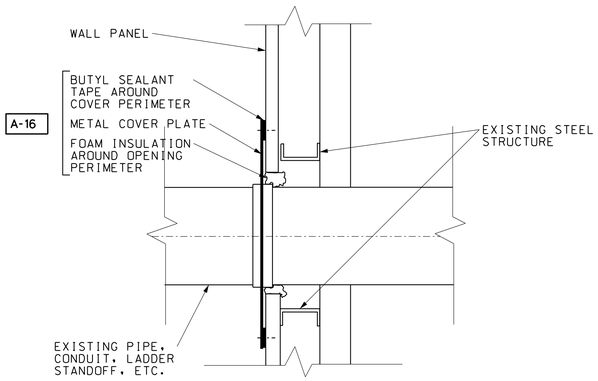

1 / A1.6 WALL PENETRATION (TYP.)
SCALE: 1 1/2" = 1'-0" 0 6" 1'

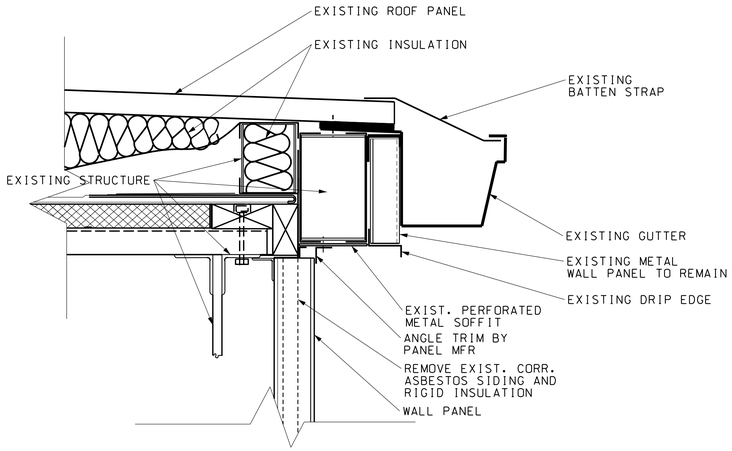

3 / A1.6 MEZZANINE EAVE DETAIL
SCALE: 3" = 1'-0" 0 2" 4" 6" 8"

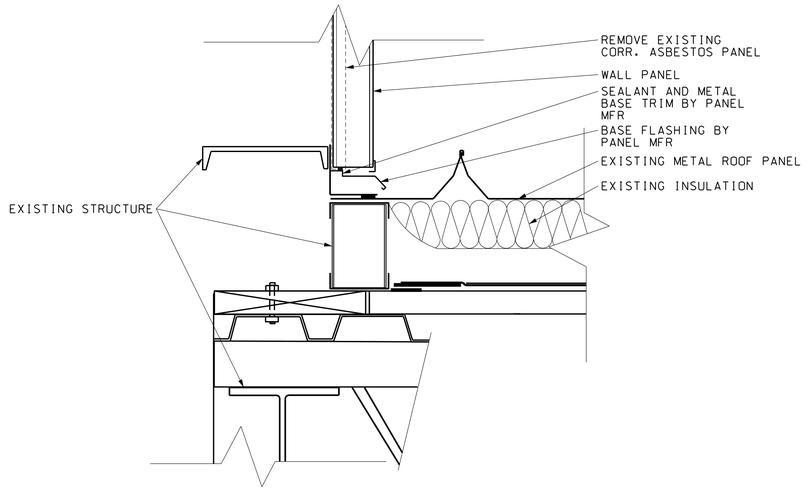

4 / A1.6 PANEL TO MEZZANINE ROOF
SCALE: 3" = 1'-0" 0 2" 4" 6" 8"

WORK DESCRIBED ON THIS SHEET APPLIES TO ADDITIVE ALTERNATE 1

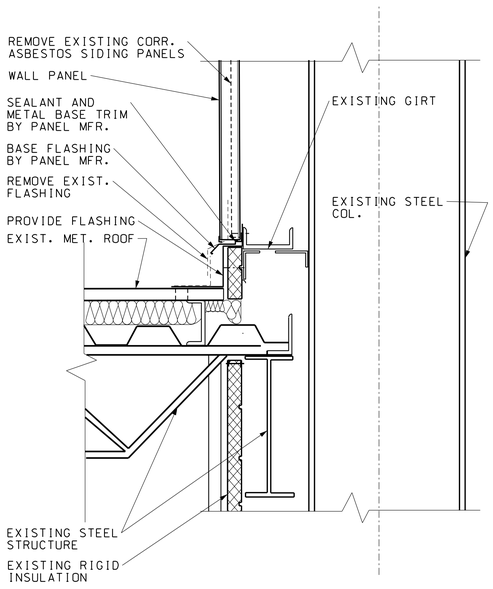

2 / A1.6 WALL/ROOF INTERSECTION
SCALE: 1 1/2" = 1'-0" 0 6" 1'

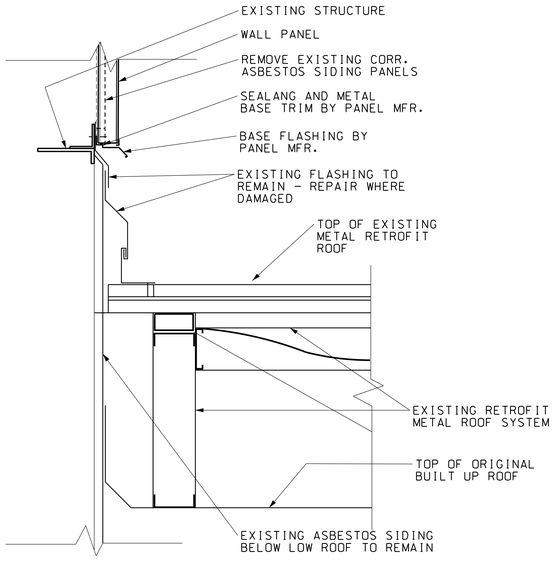

6 / A1.6 EAST WALL/ROOF INTERSECTION
SCALE: 1 1/2" = 1'-0" 0 6" 1'

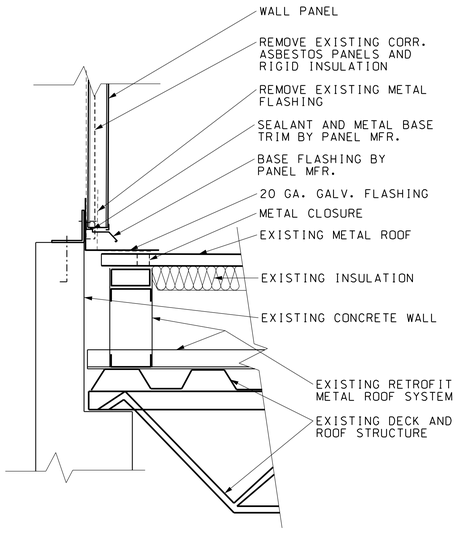

7 / A1.6 WALL/LOW ROOF INTERSECTION
SCALE: 1 1/2" = 1'-0" 0 6" 1'

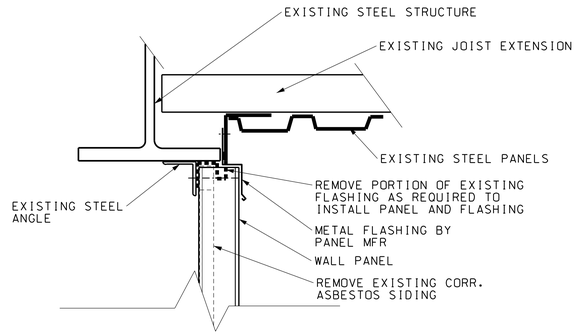

5 / A1.6 PANEL TO MEZZANINE FLOOR
SCALE: 3" = 1'-0" 0 2" 4" 6" 8"

WARNING
DO NOT SCALE THIS DRAWING
THIS DRAWING WAS DESIGNED TO BE PRINTED AT A NASA SHEET SIZE: MSFC STD. SIZE 40" X 28"

PRELIMINARY CADD DWG.
CHANGES TO THIS DRAWING SHALL BE MADE ON CADD ONLY.
3143268
12-04-ROB
LATEST CADD UPDATE: 08-28-13 01:58 PM BY: ROB

REV.	BY	DATE	REVISION	C.I. NO.	APPROVED

Marshall Space Flight Center
Huntsville, Alabama 35812

WORK REQUEST NO. 3143260

BUILDING 4619
REPLACE ASBESTOS SIDING
(BUILDINGS 4755/4619)
ARCHITECTURAL: DETAILS

AE FIRM: KAYA Associates, Inc.
NASA AE CONTRACT NO. NAS8- NNM11AA39C

SUBMITTED: DAVID A. SELLERS		APPROVAL RECOMMENDED: AD22 PROJECT A/E	APPROVED:
AE:	DATE:	APPROVAL RECOMMENDED: AD22 SUPPORT A/E	AB22 GROUP LEAD / DATE:
DESIGNED BARTON		APPROVAL RECOMMENDED: KAYA Associates, Inc.	DRAWING NO. FAC-GJ-4619-A1.6
DRAWN BARTON			
CHECKED DANIELL			
SCALE: AS NOTED		SPEC. NO. FAC M5052	

SIGNATURES ON INDEX SHEET INDICATE ACCEPTANCE OF THIS SHEET

REF. NO. A1.6 OF 7

MSFC-FORM 232 REV. 8-21-89-RCL

MSFC MASTER BID DISK 11-18-2013

Projects*4619*gj-3143268 - Replace Asbestos Siding*A1-6.dgn

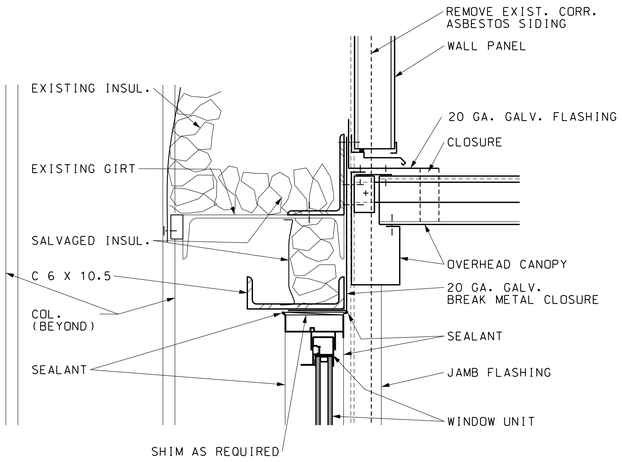

1 / A1.7 WINDOW HEAD
SCALE: 3" = 1'-0" 0 1' 2' 3'

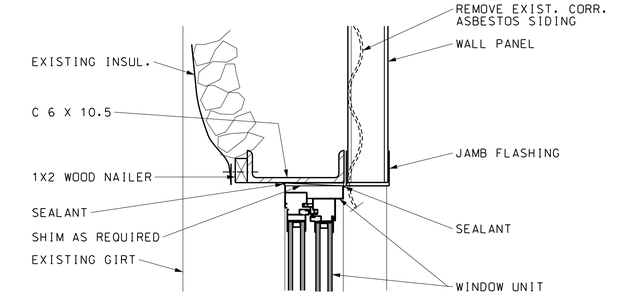

2 / A1.7 WINDOW JAMB
SCALE: 3" = 1'-0" 0 1' 2' 3'

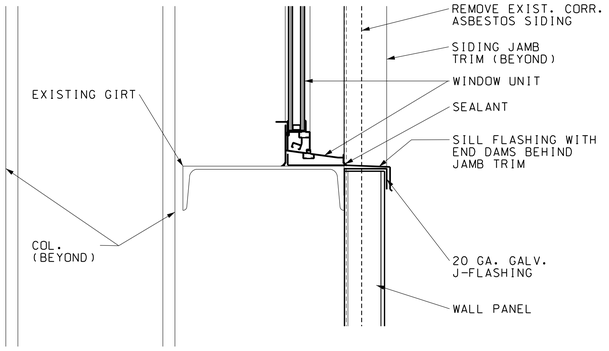

3 / A1.7 WINDOW SILL
SCALE: 3" = 1'-0" 0 1' 2' 3'

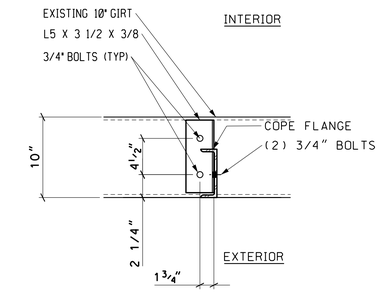

4 / A1.7 CHANNEL TO GIRT CONNECTION
SCALE: 1 1/2" = 1'-0" 0 6" 1'

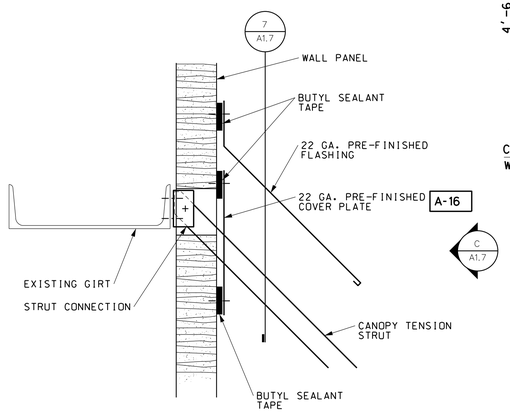

5 / A1.7 CANOPY STRUT CONNECTION
SCALE: 3" = 1'-0" 0 1' 2' 3'

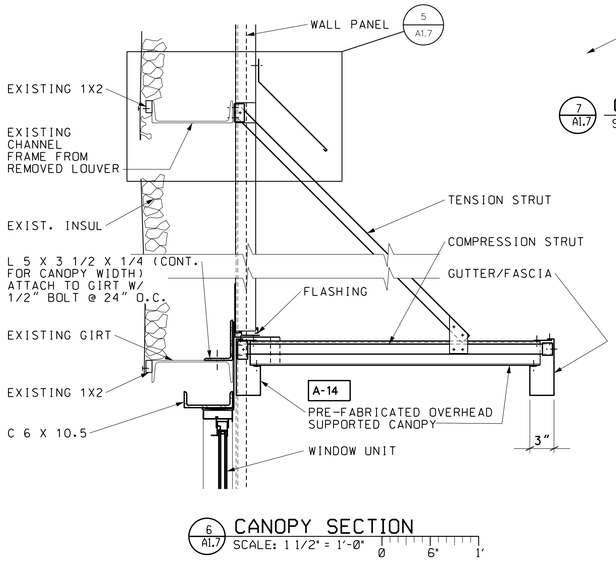

6 / A1.7 CANOPY SECTION
SCALE: 1 1/2" = 1'-0" 0 6" 1'

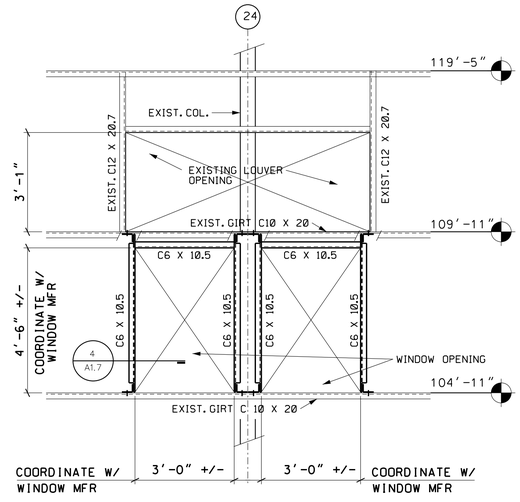

A / A1.7 FRAMING ELEVATION
SCALE: 1/2" = 1'-0" 0 1' 2' 3'

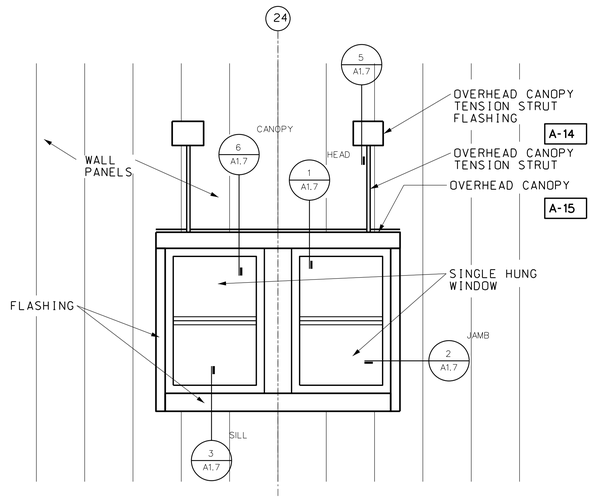

B / A1.7 WINDOW ELEVATION
SCALE: 1/2" = 1'-0" 0 1' 2' 3'

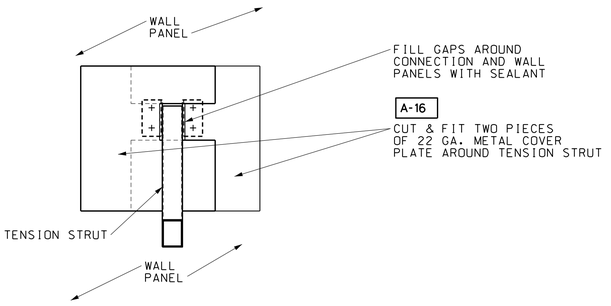

7 / A1.7 CANOPY STRUT CONNECTION
SCALE: 3" = 1'-0" 0 2" 4" 6" 8"

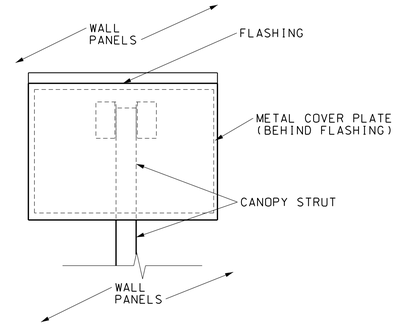

C / A1.7 CANOPY STRUT FLASHING
SCALE: 3" = 1'-0" 0 2" 4" 6" 8"

WARNING
DO NOT SCALE THIS DRAWING
THIS DRAWING WAS DESIGNED TO BE PRINTED AT A NASA SHEET SIZE: MSFC STD. SIZE 40" X 28"

PRELIMINARY CADD DWG.
CHANGES TO THIS DRAWING SHALL BE MADE ON CADD ONLY.
3143268 10-31-12 ROB
LATEST CADD UPDATE: 09-24-13 06:35 AM BY: ROB

REV.	BY	DATE	REVISION	C.I. NO.	APPROVED

Marshall Space Flight Center
Huntsville, Alabama 35812

WORK REQUEST NO. 3143268

BUILDING 4619
REPLACE ASBESTOS SIDING
(BUILDINGS 4755/4619)
ARCHITECTURAL: WINDOW ELEVATIONS, DETAILS

AE FIRM: KAYA Associates, Inc.
NASA AE CONTRACT NO. NASB- NNM11AA39C

SUBMITTED: DAVID A. SELLERS	APPROVAL RECOMMENDED: AD22 PROJECT A/E	APPROVED:	
AE: DATE:	APPROVAL RECOMMENDED: AD22 SUPPORT A/E	AB22 GROUP LEAD	DATE:
DESIGNED BARTON		DRAWING NO.	
DRAWN BARTON	APPROVAL RECOMMENDED: KAYA Associates, Inc.	FAC-GJ-4619-A1.7	
CHECKED DANEILL			
SCALE: AS NOTED	SPEC. NO. FAC M5052		

SIGNATURES ON INDEX SHEET INDICATE ACCEPTANCE OF THIS SHEET

REF. NO. A1.7 OF 7

WORK DESCRIBED ON THIS SHEET APPLIES TO ADDITIVE ALTERNATE 1

MSFC-FORM 232 REV. 8-21-89-RCL

MSFC MASTER BID DISK 11-18-2013

Projects*4619*gj-3143268 - Replace Asbestos Siding*A1-7.dgn

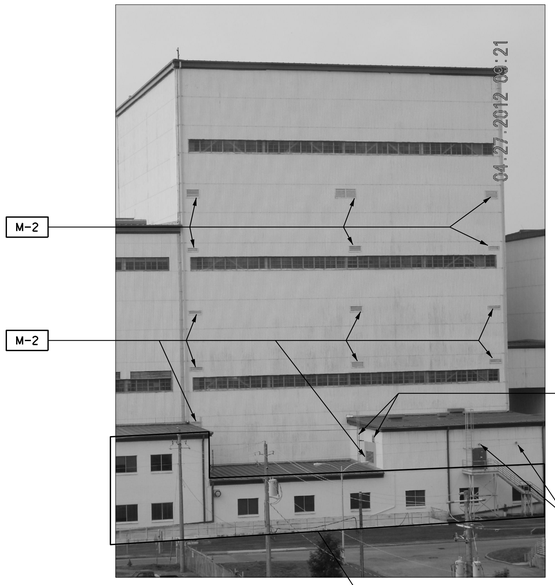

P1 ME2.1 VIEW FROM NORTH
NOT TO SCALE

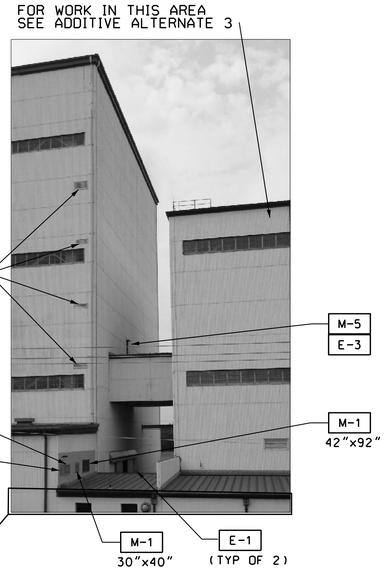

P2 ME2.1 VIEW FROM NORTH
NOT TO SCALE

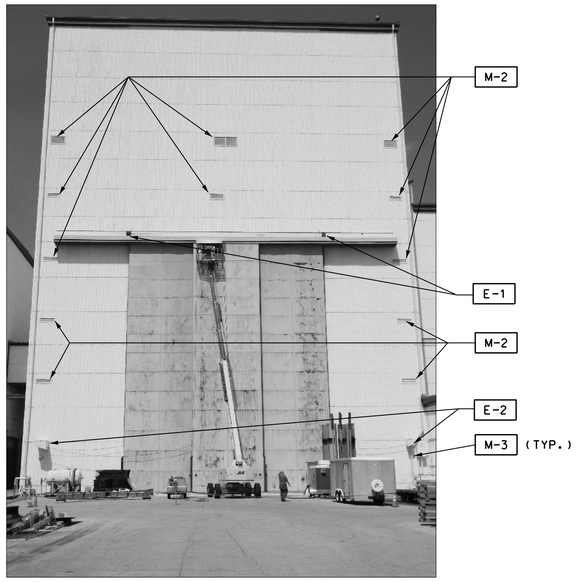

P3 ME2.1 VIEW FROM SOUTH
NOT TO SCALE

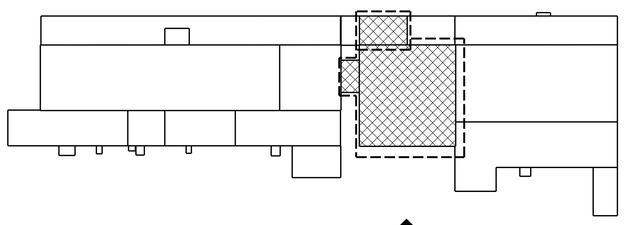

N
PHOTO KEY PLAN
NOT TO SCALE

GENERAL NOTE (ADDITIVE ALTERNATE 1)

G1. COORDINATE THE SHUTDOWN OF UTILITIES AND SYSTEMS AS NEEDED TO PERFORM REMOVAL AND REPLACEMENT OR DEMOLITION OF INDICATED ITEMS.

G2. EXTEND MECHANICAL AND ELECTRICAL COMPONENTS AS NEEDED TO ACCOMMODATE THE NEW THICKER WALL PANEL.

MECHANICAL NOTES (ADDITIVE ALTERNATE 1)

M-1 REMOVE EXISTING LOUVER TO ACCOMMODATE THE REMOVAL OF THE EXISTING SIDING AND THE INSTALLATION OF THE NEW. PROVIDE NEW LOUVER UPON THE INSTALLATION OF THE NEW SIDING. DIMENSIONS ARE APPROXIMATE AND CONTRACTOR SHALL FIELD VERIFY LOUVER DIMENSIONS.

M-2 DEMOLISH EXISTING WALL LOUVER TO ACCOMMODATE THE REMOVAL OF THE EXISTING SIDING.

M-3 REMOVE EXISTING PIPE SUPPORTS AND ASSOCIATED HARDWARE TO ACCOMMODATE THE REMOVAL OF THE EXISTING SIDING AND THE INSTALLATION OF THE NEW. PROVIDE NEW PIPE SUPPORTS AND ASSOCIATED HARDWARE UPON THE INSTALLATION OF THE NEW SIDING.

M-4 REMOVE EXISTING LOUVER TO ACCOMMODATE THE REMOVAL OF THE EXISTING SIDING AND THE INSTALLATION OF THE NEW. REINSTALL LOUVER UPON THE INSTALLATION OF THE NEW SIDING.

M-5 REMOVE EXISTING CONDENSING UNIT STRUCTURAL SUPPORTS AND TEMPORARILY SUPPORT EQUIPMENT AS NEEDED TO ACCOMMODATE THE REMOVAL OF THE EXISTING SIDING AND THE INSTALLATION OF NEW. REINSTALL CONDENSING UNITS AND STRUCTURAL SUPPORTS UPON THE INSTALLATION OF THE NEW SIDING. INSTALLATION OF CONDENSING UNITS HAVE NOT BEEN INSTALLED AT THE TIME OF THIS DESIGN. DESIGN DRAWINGS, FAC-GS-4619, ARE INCLUDED AS PART OF THE INFORMATION TO BIDDERS. VERIFY SITE CONDITIONS AND COORDINATE WITH THE COTR PRIOR TO BIDDING.

ELECTRICAL NOTES: (ADDITIVE ALTERNATE 1)

E-1 REMOVE EXISTING LIGHT FIXTURE TO ACCOMMODATE THE REMOVAL OF THE EXISTING SIDING. REINSTALL UPON THE INSTALLATION OF THE NEW SIDING. PROVIDE NEW ANCHORS TO PROPERLY SUPPORT LIGHT FIXTURE.

E-2 REMOVE EXISTING SLIDING DOOR CORD REEL ASSEMBLY TO ACCOMMODATE THE REMOVAL OF THE EXISTING SIDING. REINSTALL UPON THE INSTALLATION OF THE NEW SIDING. PROVIDE NEW SUPPORTS AND ANCHORS.

E-3 REMOVE EXISTING CONDENSING UNIT DISCONNECT SWITCHES AND TEMPORARILY SUPPORT AS NEEDED TO ACCOMMODATE THE REMOVAL OF THE EXISTING SIDING AND THE INSTALLATION OF NEW. REINSTALL CONDENSING UNIT DISCONNECT SWITCHES UPON THE INSTALLATION OF THE NEW SIDING. INSTALLATION OF CONDENSING UNITS HAVE NOT BEEN INSTALLED AT THE TIME OF THIS DESIGN. DESIGN DRAWINGS, FAC-GS-4619, ARE INCLUDED AS PART OF THE INFORMATION TO BIDDERS. VERIFY SITE CONDITIONS AND COORDINATE WITH THE COTR PRIOR TO BIDDING.

E-4 ALL MODIFICATIONS TO THE ELECTRICAL SYSTEM SHALL BE PERFORMED WITH THE POWER OFF. CONTRACTOR SHALL PROVIDE APPROPRIATE LOCK OUT/TAG OUT DEVICES. WHERE AN ELECTRICAL SHUTDOWN IS NOT FEASIBLE, AN ENERGIZED ELECTRICAL WORK PERMIT SHALL BE OBTAINED. REFER TO MWI 8715.1, ELECTRICAL SAFETY PROGRAM AND MSFC FORM 4462, ENERGIZED ELECTRICAL WORK PERMIT.

E-5 DETACH EXISTING LIGHTNING PROTECTION SLEEVES FROM SIDING. REATTACH AFTER INSTALLATION OF NEW SIDING.

ASBESTOS WARNING

EXTERIOR WALL PANELS CONTAIN ASBESTOS. ASBESTOS CONTENT OF THE WALL PANELS IS NOT CONSIDERED FRIABLE. INSULATION AND MASTIC ON PIPING AND DUCTWORK CONTAIN ASBESTOS. ASBESTOS WORK SHALL COMPLY WITH SPECIFICATIONS, SECTION 02080 AND SHALL MEET ALL OSHA AND EPA REQUIREMENTS.

WORK DESCRIBED ON THIS SHEET APPLIES TO ADDITIVE ALTERNATE 1

WARNING
DO NOT SCALE THIS DRAWING
THIS DRAWING WAS DESIGNED TO BE PRINTED AT A NASA SHEET SIZE: MSFC STD. SIZE 40" X 28"

PRELIMINARY CADD DWG.
CHANGES TO THIS DRAWING SHALL BE MADE ON CADD ONLY.
3143268 06-28-12 GAB
LATEST CADD UPDATE: 08-28-13 03:53 PM BY: B. JANSEN

REV.	BY	DATE	REVISION	C.I. NO.	APPROVED

Marshall Space Flight Center
Huntsville, Alabama 35812

WORK REQUEST NO. 3143268

BUILDING 4619
REPLACE ASBESTOS SIDING
(BUILDINGS 4755/4619)
DEMOLITION: PHOTOGRAPH, NOTES

AE FIRM: KAYA Associates, Inc.
NASA AE CONTRACT NO. NASB- NNM11AA39C

SUBMITTED: DAVID A. SELLERS
APPROVAL RECOMMENDED: AD22 PROJECT A/E
APPROVED:
AE: DATE:
APPROVAL RECOMMENDED: AD22 SUPPORT A/E
AB22 GROUP LEAD DATE:
DESIGNED LUCAS/WASILEFSKY
DRAWN JANSEN/FLETCHER
CHECKED LANDERS/AJAYI
APPROVAL RECOMMENDED: KAYA Associates, Inc.
SCALE: AS NOTED
SPEC. NO. FAC M5052
DRAWING NO. FAC-GJ-4619-ME1.1

SIGNATURES ON INDEX SHEET INDICATE ACCEPTANCE OF THIS SHEET

REF. NO. ME1.1 OF 1

MSFC-FORM 232 REV. 8-21-89-RCL

MSFC MASTER BID DISK 11-18-2013

projects*4619*gj-3143268 - Replace Asbestos Siding*ME1.1.dgn

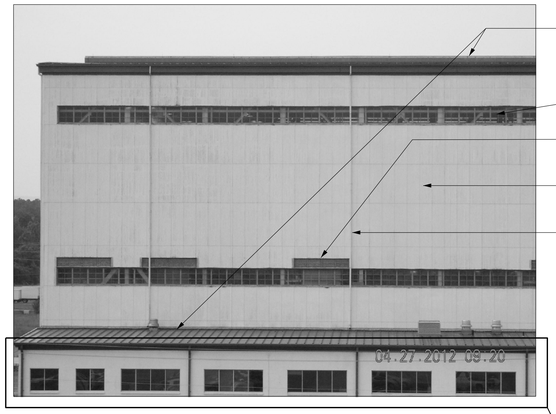

P1 A2.1 VIEW FROM NORTH
NOT TO SCALE

FOR WORK IN THIS AREA SEE ADDITIVE ALTERNATE 4

FOR WORK IN THIS AREA SEE ADDITIVE ALTERNATE 1

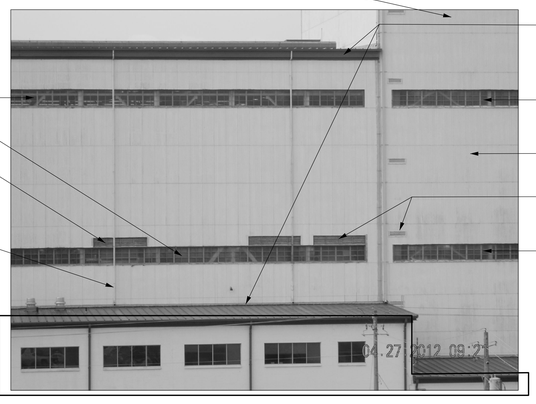

P2 A2.1 VIEW FROM NORTH
NOT TO SCALE

GENERAL DEMOLITION NOTES
(ADDITIVE ALTERNATE 2)

1. CONTRACTOR SHALL BE RESPONSIBLE FOR ALL MATERIAL DISPOSAL.
2. ALL DIMENSIONS INDICATED HEREIN ARE APPROXIMATE AND SHALL BE FIELD-VERIFIED BY CONTRACTOR.
3. EXISTING BUILDING SIDING PANELS CONTAIN ASBESTOS. SEE SPECIFICATIONS REGARDING ASBESTOS CONTAINING MATERIALS (ACM).
4. CONTRACTOR SHALL FOLLOW GENERAL GUIDELINES OUTLINED IN SPECIFICATION SECTIONS 02050 AND 02080.
5. ALL ACM SHALL BE DISPOSED OF IN THE APPROVED ON-BASE FACILITY WHICH IS LOCATED WITHIN 5 MILES OF PROJECT.
6. THE CONTRACTOR SHALL NOTIFY THE CONTACTS LISTED IN SPECIFICATION SECTION 02080 AT LEAST 10 DAYS PRIOR TO ACM REMOVAL. CONTRACTOR SHALL COORDINATE ALL WORK WITH COTR AND BUILDING OCCUPANTS.
7. CONTRACTOR QUALIFICATIONS: THE ASBESTOS ABATEMENT CONTRACTOR OR GENERAL CONTRACTOR SHALL BE ACCREDITED IN THE STATE OF ALABAMA TO PERFORM ASBESTOS REMOVAL.
8. MAINTAIN EGRESS PATHS FROM ALL EXITS TO GRADE LEVEL, AT ALL STAGES OF DEMOLITION AND CONSTRUCTION. MINIMUM EGRESS WIDTHS SHALL BE AS WIDE AS THE EXIT DOORS THEY SERVE.

ARCHITECTURAL DEMOLITION NOTES
(ADDITIVE ALTERNATE 2)

- D-1 REMOVE EXISTING CORRUGATED ASBESTOS SIDING AND ASSOCIATED SIDING MATERIALS. PREPARE FOR INSTALLATION OF NEW INSULATED SIDING. CLEAN PURLINS, COLUMNS AND OTHER SURFACES OF DUST, RESIDUE AND DEBRIS AFTER REMOVAL OF EXISTING SIDING AND PRIOR TO INSTALLATION OF NEW SIDING PANELS.
- D-2 REMOVE EXISTING TRANSLUCENT PANELS.
- D-3 REMOVE EXISTING DOWNSPOUTS AND ASSOCIATED ACCESSORIES.
- D-4 NO WORK ON EXISTING HIGH BAY DOORS.
- D-5 FLASH-IN TOP OF WALL PANELS AT ROOF EDGES AS REQUIRED FOR INSTALLATION OF NEW METAL WALL PANELS.
- D-6 REMOVE EXISTING LOUVERS, ELECTRICAL FIXTURES AND DEVICES AS DIRECTED BY MECHANICAL/ELECTRICAL DRAWINGS.
- D-7 REMOVE EXISTING STEEL FRAME INDUSTRIAL WINDOWS. PROTECT OPENINGS FROM ELEMENTS AFTER REMOVAL.
- D-8 REMOVE SUPPORTS AND ATTACHMENT HARDWARE FROM EXISTING STEEL DUCTWORK AS REQUIRED TO REMOVE EXISTING SIDING. INSTALL NEW SIDING. AFTER SIDING IS INSTALLED REATTACH DUCTWORK TO BUILDING AND SUPPORTS. SEE MECHANICAL.
- D-9 EXISTING SOLAR SHADE STRUCTURES TO REMAIN. REMOVE EXISTING CORRUGATED STEEL ROOF PANELS FROM THE STRUCTURES. REMOVE EXISTING SEALANT. CLEAN STRUCTURAL STEEL AND PREPARE FOR PAINTING AND INSTALLATION OF NEW ROOF PANELS.
- D-10 EXISTING DOORS AND WINDOWS TO REMAIN UNLESS NOTED OTHERWISE.

FOR WORK IN THIS AREA SEE ADDITIVE ALTERNATE 4

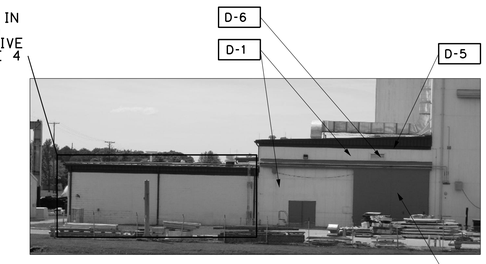

P3 A2.1 VIEW FROM EAST
NOT TO SCALE

SEE ADDITIVE ALTERNATE 1

P4 A2.1 VIEW FROM EAST
NOT TO SCALE

P5 A2.1 VIEW FROM EAST
NOT TO SCALE

D-8
D-5

P6 A2.1 VIEW FROM SOUTHWEST
NOT TO SCALE

D-6

EXIST. MET. PANELS -NO WORK

P7 A2.1 VIEW FROM SOUTH
NOT TO SCALE

P8 A2.1 VIEW FROM SOUTH
NOT TO SCALE

LEAD WARNING

COATINGS ON EXISTING STRUCTURAL STEEL AND STEEL WINDOWS CONTAIN LEAD. WORK SHALL COMPLY WITH CONTRACT DOCUMENTS AND ALL GOVERNING ENVIRONMENTAL AND HEALTH REGULATIONS.

ASBESTOS WARNING

EXTERIOR WALL PANELS CONTAIN ASBESTOS. ASBESTOS CONTENT OF THE WALL PANELS IS NOT CONSIDERED FRIABLE. INSULATION AND MASTIC ON PIPING AND DUCTWORK CONTAIN ASBESTOS. ASBESTOS WORK SHALL COMPLY WITH SPECIFICATIONS, SECTION 02080 AND SHALL MEET ALL OSHA AND EPA REQUIREMENTS.

WORK DESCRIBED ON THIS SHEET APPLIES TO ADDITIVE ALTERNATE 2

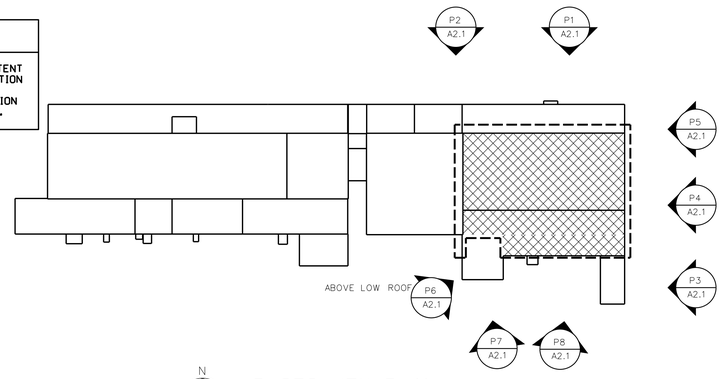

N
PHOTO KEY PLAN
NOT TO SCALE

WARNING
DO NOT SCALE THIS DRAWING
THIS DRAWING WAS DESIGNED TO BE PRINTED AT A NASA SHEET SIZE: MSFC STD. SIZE 40" X 28"

PRELIMINARY CADD DWG.
CHANGES TO THIS DRAWING SHALL BE MADE ON CADD ONLY.
3143268 04-11-12 SGF
LATEST CADD UPDATE: 08-28-13 04:01 PM BY: ROB

REV.	BY	DATE	REVISION	C.N. NO.	APPROVED

Marshall Space Flight Center
Huntsville, Alabama 35812

WORK REQUEST NO. 3143268

BUILDING 4619
REPLACE ASBESTOS SIDING
(BUILDINGS 4755/4619)
DEMOLITION: PHOTOGRAPHS, NOTES

AE FIRM: KAYA Associates, Inc.
NASA AE CONTRACT NO. NAS8- NNM11AA39C

SUBMITTED: DAVID A. SELLERS
APPROVAL RECOMMENDED: AD22 PROJECT A/E
APPROVED:
AE: DATE:
APPROVAL RECOMMENDED: AD22 SUPPORT A/E
AB22 GROUP LEAD DATE:
DESIGNED BARTON
DRAWN BARTON
CHECKED DANIELL
APPROVAL RECOMMENDED: KAYA Associates, Inc.
DRAWING NO. FAC-GJ-4619-A2.1
SCALE: AS NOTED
SPEC. NO. FAC M5052

SIGNATURES ON INDEX SHEET INDICATE ACCEPTANCE OF THIS SHEET

REF. NO. A2.1 OF 6

MSFC-FORM 232 REV. 8-21-89-RCL

MSFC MASTER BID DISK 11-18-2013

Projects*4619*gj-3143268 - Replace Asbestos Siding*A2-1.dgn

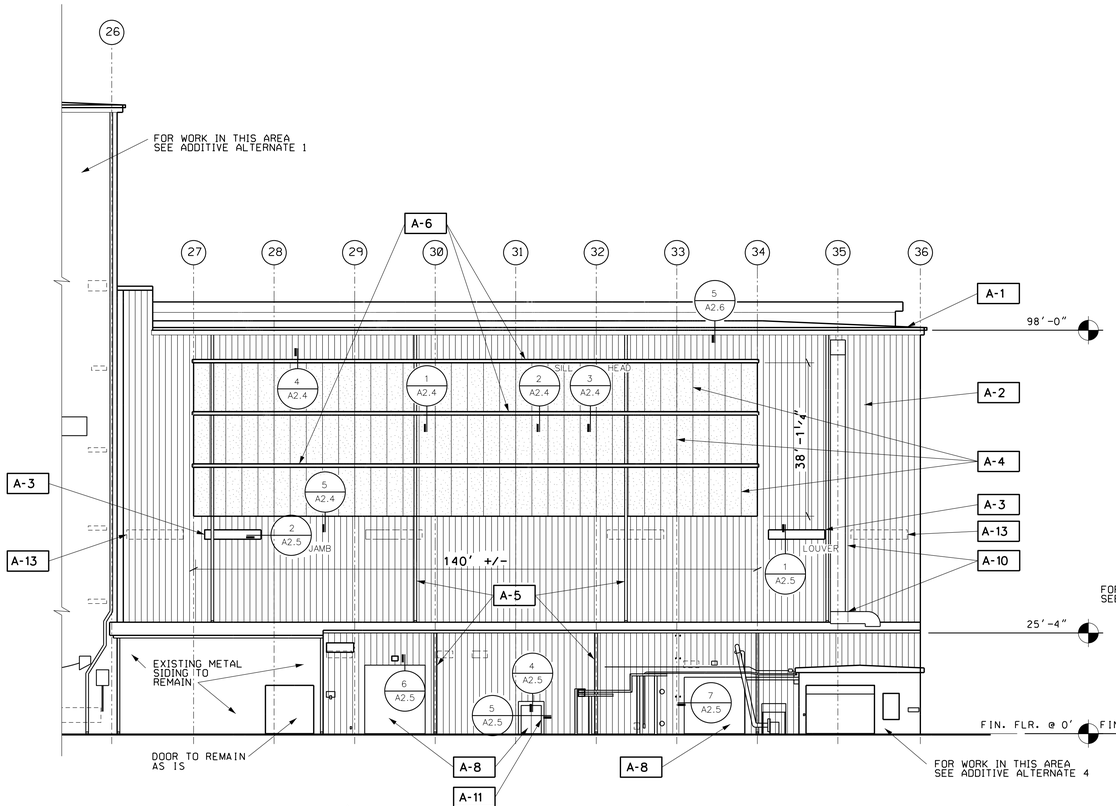

A A2.2 SOUTH ELEVATION - EAST HIGH-BAY
SCALE: 1/32"=1'0"

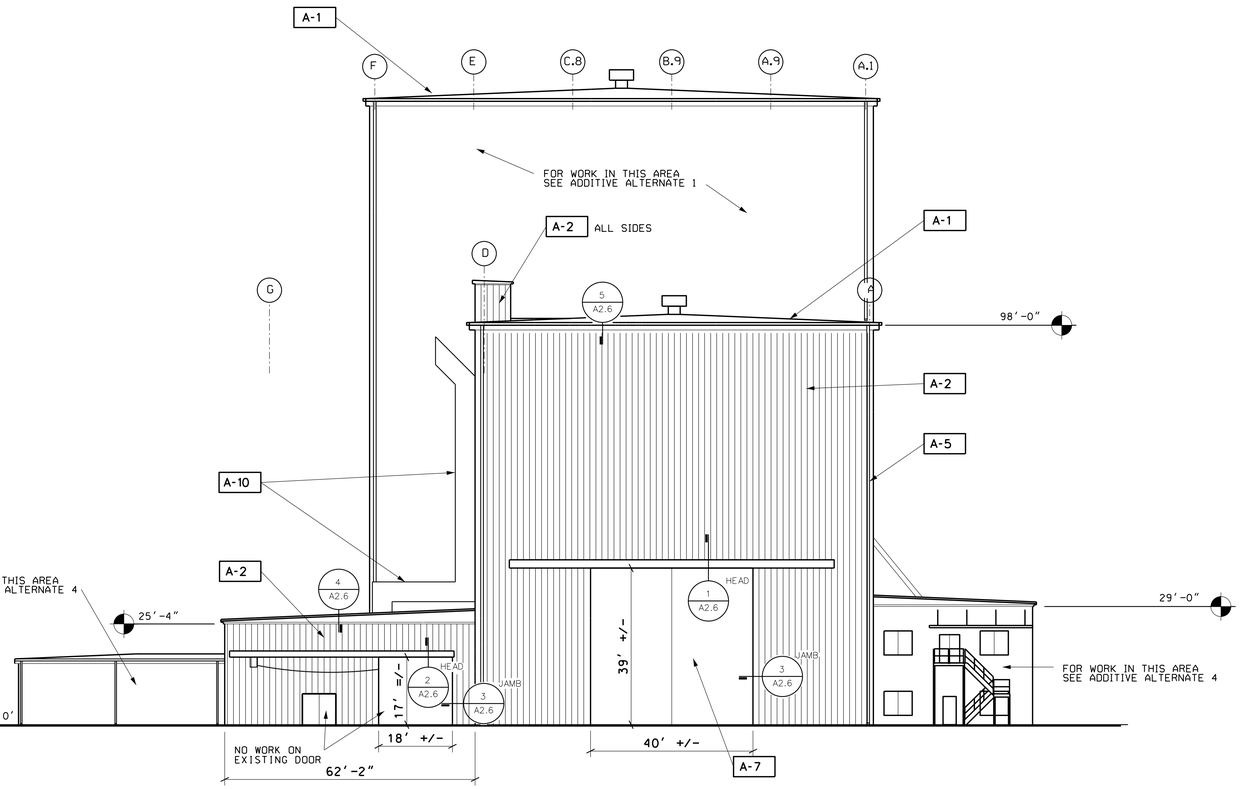

B A2.2 EAST ELEVATION - EAST HIGH-BAY
SCALE: 1/32"=1'0"

GENERAL NOTES
(ADDITIVE ALTERNATE 2)

A. CONTRACTOR SHALL MAINTAIN SCHEDULE. COORDINATE PROJECT WITH COTR FOR PROPER ORDER OF INSTALLATION AND ENSURE ALL EQUIPMENT AND FINISHES ARE PROTECTED AT ALL TIMES.

B. VERIFY ALL DIMENSIONS AND CONDITIONS AT THE SITE PRIOR TO BIDDING AND CONSTRUCTION.

C. REPAIR OR REPLACE ALL WORK DAMAGED DUE TO DEMOLITION OR CONSTRUCTION TO PRODUCE A COMPLETELY FINISHED JOB.

D. ALL MATERIAL IS SPECIFIED ON AN "APPROVED EQUAL" BASIS UNLESS OTHERWISE NOTED. APPROVAL WILL BE BY THE COTR.

E. ALL MATERIAL SPECIFIED SHALL BE INSTALLED IN ACCORDANCE WITH THE MANUFACTURER'S WRITTEN INSTRUCTIONS UNLESS OTHERWISE SHOWN.

F. ALL DETAILS AND SECTIONS SHOWN ON THE DRAWINGS ARE TYPICAL AND SHALL APPLY TO SIMILAR SITUATIONS THROUGHOUT THE ENTIRE PROJECT.

G. ELEVATIONS DO NOT SHOW ALL PENETRATIONS FOR CLARITY. REFER TO DEMOLITION PHOTOGRAPHS AND FIELD OBSERVATIONS TO CONFIRM FULL EXTENT OF PENETRATIONS AND OBSTRUCTIONS.

H. THE BUILDING WILL BE OCCUPIED DURING THIS WORK. THE CONTRACTOR, AND ALL WORKERS, SHALL COORDINATE THEIR WORK TO MINIMIZE IMPACT TO THOSE USING THE BUILDING AND NORMAL FUNCTIONS OF THE BUILDING.

I. MAINTAIN EGRESS PATHS FROM ALL EXITS TO GRADE LEVEL AT ALL STAGES OF DEMOLITION AND CONSTRUCTION. MINIMUM EGRESS WIDTHS SHALL BE AS WIDE AS THE EXIT DOORS THEY SERVE.

ARCHITECTURAL NOTES
(ADDITIVE ALTERNATE 2)

A-1 EXISTING ROOF.

A-2 PROVIDE INSULATED METAL PANELS.

A-3 PROVIDE LOUVERS (TYPICAL) -SEE MECHANICAL.

A-4 PROVIDE TRANSLUCENT PANELS.

A-5 PROVIDE NEW DOWNSPOUTS AT LOCATIONS WHERE EXISTING DOWNSPOUTS WERE DESIGNATED FOR REMOVAL-TYPICAL.

A-6 SOLAR SHADES: PAINT EXPOSED STRUCTURE. PROVIDE NEW SEALANT. PROVIDE NEW CORRUGATED METAL ROOF PANELS. PANELS SHALL BE EQUAL TO "MBCI" PBU 22 GA. PANELS WITH GALVALUME PLUS FINISH. INSTALL IN ACCORDANCE WITH MANUFACTURER'S INSTALLATION INSTRUCTIONS, PROVIDING TAPE SEALERS, SEAM SEALERS, FLASHINGS, FASTENERS AND SEALANTS. PROVIDE RELATED FLASHINGS IN MATCHING GALVALUME PLUS FINISH.

A-7 NO WORK ON HIGH-BAY DOOR.

A-8 PAINT EXISTING PERSONNEL DOOR AND FRAME -INSIDE AND OUTSIDE. PAINT EXISTING ROLL-UP DOOR FRAME. DO NOT PAINT ROLL-UP DOOR. MATCH EXISTING COLOR SCHEME.

(ARCHITECTURAL NOTES CONTINUED ON SHEET A2.3)

LEGEND

INSULATED METAL PANELS

TRANSLUCENT PANELS

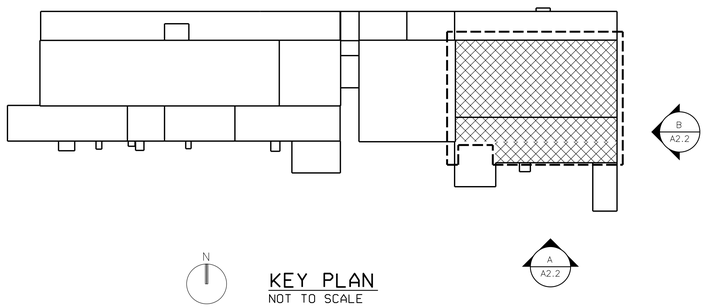

N

KEY PLAN
NOT TO SCALE

WORK DESCRIBED ON THIS SHEET
APPLIES TO ADDITIVE ALTERNATE 2

WARNING
DO NOT SCALE THIS DRAWING
THIS DRAWING WAS DESIGNED TO BE PRINTED AT A NASA SHEET SIZE: MSFC STD. SIZE 40" X 28"

PRELIMINARY CADD DWG.
CHANGES TO THIS DRAWING SHALL BE MADE ON CADD ONLY.
3143268 06-22-12 ROB
LATEST CADD UPDATE: 09-24-13 06:40 AM
BY: ROB

REV.	BY	DATE	REVISION	C.I. NO.	APPROVED

Marshall Space Flight Center
Huntsville, Alabama 35812

WORK REQUEST NO. 3143268

BUILDING 4619
REPLACE ASBESTOS SIDING
(BUILDINGS 4755/4619)
ARCHITECTURAL: ELEVATIONS, NOTES

AE FIRM: KAYA Associates, Inc.
NASA AE CONTRACT NO. NAS8- NNM11AA39C

SUBMITTED: DAVID A. SELLERS
APPROVAL RECOMMENDED: AD22 PROJECT A/E
APPROVED:
AE: DATE:
APPROVAL RECOMMENDED: AD22 SUPPORT A/E
AD22 GROUP LEAD DATE:
DESIGNED BARTON
DRAWN BARTON
CHECKED DANIELL
APPROVAL RECOMMENDED: KAYA Associates, Inc.
DRAWING NO. FAC-GJ-4619-A2.2
SCALE: AS NOTED
SPEC. NO. FAC M5052

SIGNATURES ON INDEX SHEET INDICATE ACCEPTANCE OF THIS SHEET

REF. NO. A2.2 OF 6

MSFC-FORM 232 REV. 8-21-99-MCL

MSFC MASTER BID DISK 11-18-2013

Projects*4619*gj-3143268 - Replace Asbestos Siding*A2-2.dgn

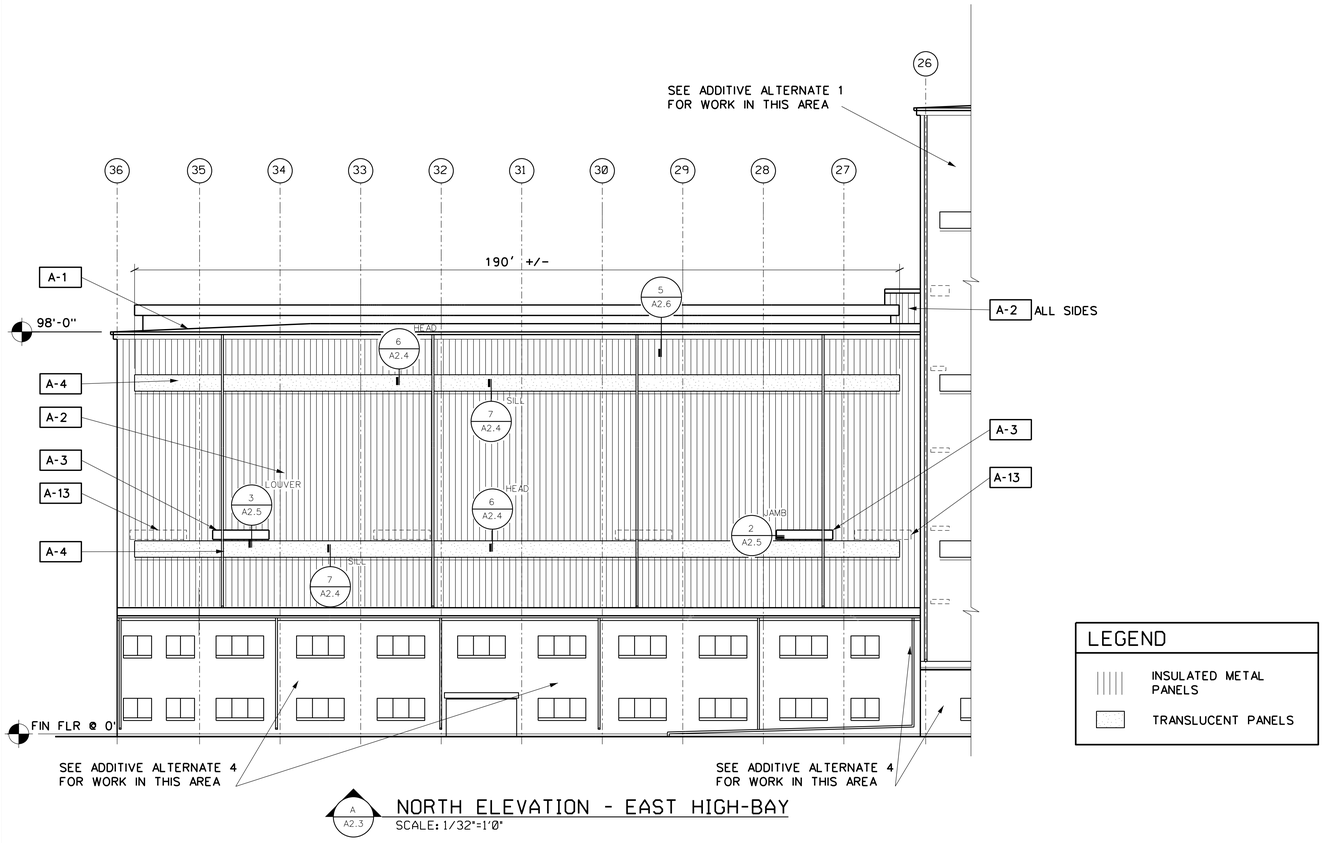

A
A2.3

NORTH ELEVATION - EAST HIGH-BAY

SCALE: 1/32"=1'0"

LEGEND

- INSULATED METAL PANELS
- TRANSLUCENT PANELS

ARCHITECTURAL NOTES CONTINUED FROM SHEET A2.2
(ADDITIVE ALTERNATE 2)

A-9 AFTER SIDING IS INSTALLED, REINSTALL EXISTING BUILDING SIGNAGE. REPLACE DAMAGED SIGNAGE WITH NEW. MATCH IN-KIND (TYPICAL).

A-10 EXISTING DUCTWORK. SEE MECHANICAL.

A-11 PAINT CMU AND CEMENT PLASTER CEILING IN DOORWAY RECESS. MATCH EXISTING COLOR.

A-12 FABRICATE COVER PLATE FROM PRE-FINISHED 22 GAUGE METAL MATCHING THE WALL PANEL FACE IN COLOR AND FINISH. FILL SIDING JOINTS BEHIND COVER PLATE WITH URETHANE SEALANT. PROVIDE BUTYL SEALANT TAPE TO TOP EDGE, SIDE EDGES OF PLATE AND HOLE PERIMETERS. ATTACH PLATE TO SIDING WITH RIVETS OR TRIM SCREWS AT 3-INCHES ON CENTER SPACING SET THROUGH SEALANT TAPE. FILL THE SPACE AROUND EACH PENETRATION WITH FIELD APPLIED FOAM INSULATION FROM INTERIOR SIDE OF THE PANEL. FOAM SHALL BE COMPATIBLE WITH PANEL INSULATION. PLATE SHALL COVER OPENINGS WITH A MINIMUM 2-INCH CLEARANCE IN ALL DIRECTIONS. THE OPENINGS FOR THE PENETRATIONS SHALL HAVE A MAXIMUM CLEARANCE OF 1/8-INCH ALL AROUND. SEAL THE OPENINGS WITH A CONTINUOUS 3/8-INCH FILLET BEAD OF URETHANE SEALANT. SEALANT SHALL BE COLOR MATCHED TO EXTERIOR SIDING.

A-13 REMOVE EXISTING SHEET METAL COVER, WHEN PRESENT, AND INSTALL SIDING OVER EXISTING LOUVERS. UNLESS OTHERWISE NOTED.

COLOR SCHEME:

THE COLOR SCHEME TO BE USED WILL LOOK MUCH LIKE THE EXISTING. FINAL COLOR OF PRE-FINISHED PANELS AND TRIM WILL BE SELECTED BY THE COTR FROM THE PANEL MANUFACTURER'S STANDARD COLORS. PAINT COLORS WILL BE SELECTED BASED ON THE PANELS AND TRIM COLORS ACTUALLY SELECTED FOR USE.

METAL PANELS: THERE WILL BE ONE COLOR OF INSULATED METAL PANELS.

METAL TRIM COLORS: THERE WILL BE TWO COLORS USED.

TRIM COLOR 1. TRIM TO MATCH PANEL COLOR. DOWNSPOUTS TO MATCH PANEL COLOR.
TRIM COLOR 2. SOME OR MOST OF THE TRIM AT EAVES, FASCIA, SOFFIT AND GUTTERS WILL BE THE CLOSEST BLUE FROM THE MANUFACTURER'S STANDARD COLORS TO BLUE ROOF CURRENTLY ON THE BUILDING.

PAINT COLORS: ITEMS TO BE PAINTED SHALL MATCH EXISTING COLORS AS PRACTICABLE. SUBMIT COLOR SAMPLES FOR AREAS THAT SUFFER FROM EXCESSIVE FADING AND PAINT DEGRADATION.

WORK DESCRIBED ON THIS SHEET APPLIES TO ADDITIVE ALTERNATE 2

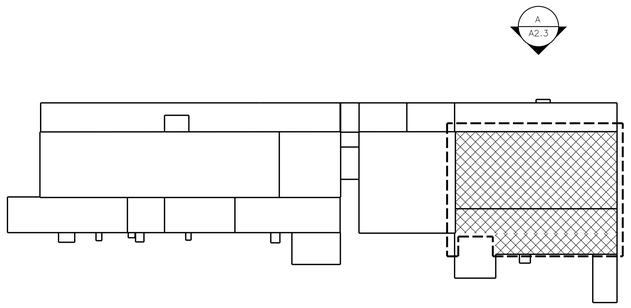

A
A2.3

N

KEY PLAN
NOT TO SCALE

WARNING
DO NOT SCALE THIS DRAWING
THIS DRAWING WAS DESIGNED TO BE PRINTED AT A NASA SHEET SIZE: MSFC STD. SIZE 40" X 28"

PRELIMINARY CADD DWG.
CHANGES TO THIS DRAWING SHALL BE MADE ON CADD ONLY.
3143268 06-22-12 ROB
LATEST CADD UPDATE: 08-28-13 01:00 PM
BY: ROB

REV.	BY	DATE	REVISION	C.I. NO.	APPROVED

Marshall Space Flight Center
Huntsville, Alabama 35812

WORK REQUEST NO. 3143268

BUILDING 4619
REPLACE ASBESTOS SIDING
(BUILDINGS 4755/4619)
ARCHITECTURAL: ELEVATIONS, NOTES

AE FIRM: KAYA Associates, Inc.
NASA AE CONTRACT NO. NAS8- NNM11AA39C

SUBMITTED: DAVID A. SELLERS	APPROVAL RECOMMENDED: AD22 PROJECT A/E	APPROVED:
AE: DATE:	APPROVAL RECOMMENDED: AD22 SUPPORT A/E	AD22 GROUP LEAD DATE:
DESIGNED BARTON / DRAWN BARTON / CHECKED DANIELL	APPROVAL RECOMMENDED: KAYA Associates, Inc.	DRAWING NO. FAC-GJ-4619-A2.3
SCALE: AS NOTED	SPEC. NO. FAC M5052	

SIGNATURES ON INDEX SHEET INDICATE ACCEPTANCE OF THIS SHEET

REF. NO. A2.3 OF 6

MSFC-FORM 232 REV. 8-21-99-MCL

MSFC MASTER BID DISK 11-18-2013

Projects*4619*gj-3143268 - Replace Asbestos Siding*A2-3.dgn

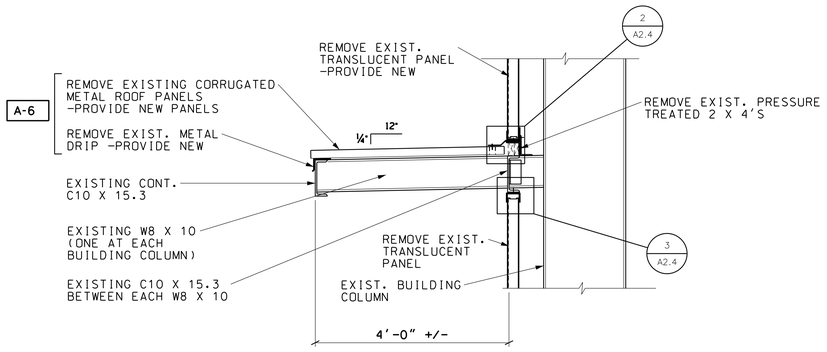

1 A2.4 SOLAR SHADE DETAIL
SCALE: 3/4" = 1'-0" 0 1' 2'

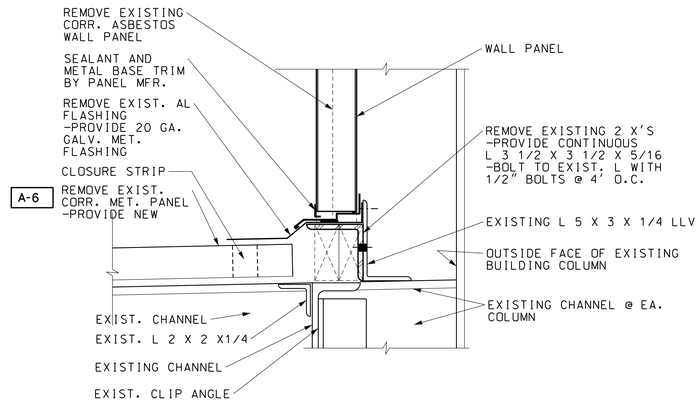

4 A2.4 WALL PANEL BASE DETAIL
SCALE: 3" = 1'-0" 0 2" 4" 6" 8"

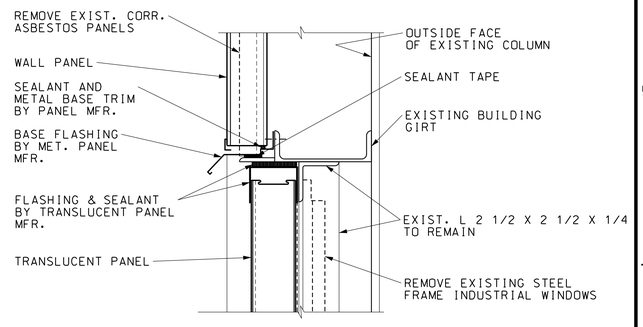

6 A2.4 HEAD - TRANSLUCENT PANEL DETAIL
SCALE: 3" = 1'-0" 0 2" 4" 6" 8"

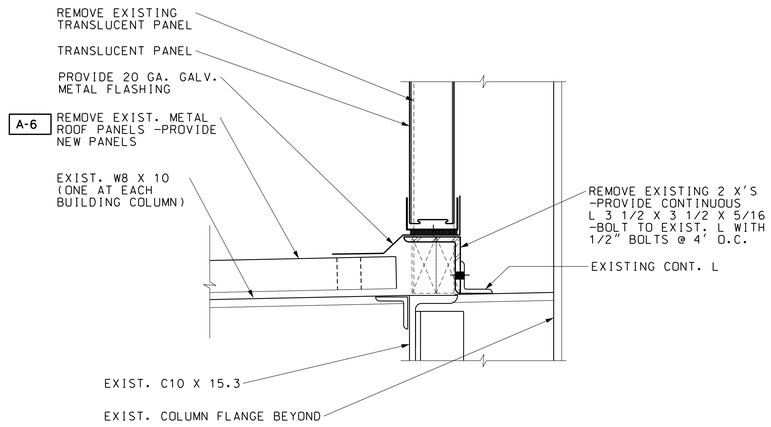

2 A2.4 SILL - TRANSLUCENT PANEL DETAIL
SCALE: 3" = 1'-0" 0 2" 4" 6" 8"

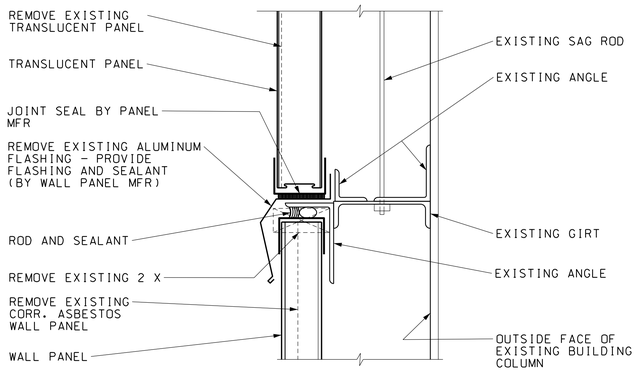

5 A2.4 WALL PANEL HEAD DETAIL
SCALE: 3" = 1'-0" 0 2" 4" 6" 8"

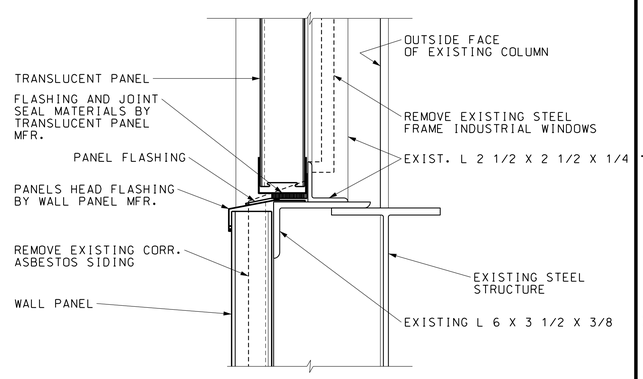

7 A2.4 SILL - TRANSLUCENT PANEL DETAIL
SCALE: 3" = 1'-0" 0 2" 4" 6" 8"

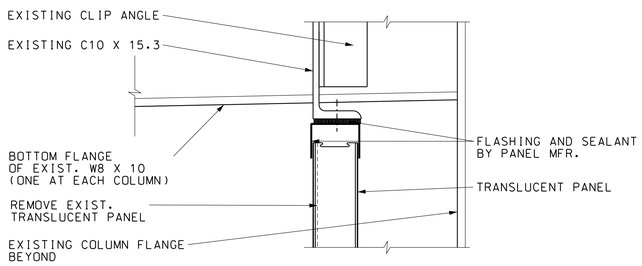

3 A2.4 HEAD - TRANSLUCENT PANEL DETAIL
SCALE: 3" = 1'-0" 0 2" 4" 6" 8"

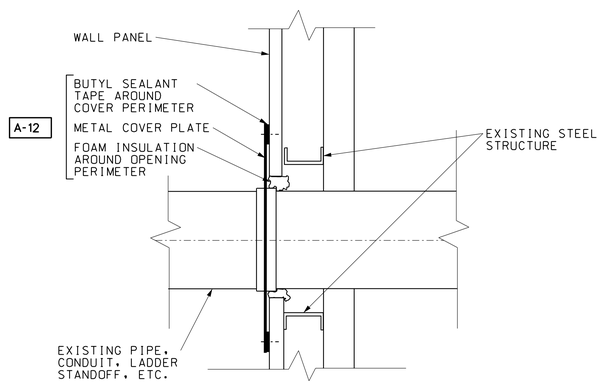

8 A2.4 WALL PENETRATION (TYP.)
SCALE: 1 1/2" = 1'-0" 0 6" 1'

WORK DESCRIBED ON THIS SHEET
APPLIES TO ADDITIVE ALTERNATE 2

WARNING
DO NOT SCALE THIS DRAWING
THIS DRAWING WAS DESIGNED TO BE PRINTED AT
A NASA SHEET SIZE: MSFC STD. SIZE 40" X 28"

PRELIMINARY CADD DWG.
CHANGES TO THIS DRAWING SHALL BE MADE ON CADD ONLY.
3143268 08-23-12 ROB
LATEST CADD UPDATE: 08-28-13 07:23 AM BY: ROB

REV.	BY	DATE	REVISION	C.I. NO.	APPROVED

Marshall Space Flight Center
Huntsville, Alabama 35812

WORK REQUEST NO. 3143268

BUILDING 4619
REPLACE ASBESTOS SIDING
(BUILDINGS 4755/4619)
ARCHITECTURAL: TRANSLUCENT PANEL DETAILS

AE FIRM: KAYA Associates, Inc.
NASA AE CONTRACT NO. NAS8- NNM11AA39C

SUBMITTED: DAVID A. SELLERS	APPROVAL RECOMMENDED: AD22 PROJECT A/E	APPROVED:
AE: DATE:	APPROVAL RECOMMENDED: AD22 SUPPORT A/E	AD22 GROUP LEAD DATE:
DESIGNED BARTON / DRAWN BARTON / CHECKED DANIELL	APPROVAL RECOMMENDED: KAYA Associates, Inc.	DRAWING NO. FAC-GJ-4619-A2.4
SCALE: AS NOTED	SPEC. NO. FAC M5052	

SIGNATURES ON INDEX SHEET INDICATE ACCEPTANCE OF THIS SHEET

REF. NO. A2.4 OF 6

MSFC-FORM 232 REV. 8-21-89-RCL

MSFC MASTER BID DISK 11-18-2013

Projects*4619*gj-3143268 - Replace Asbestos Siding*A2-4.dgn

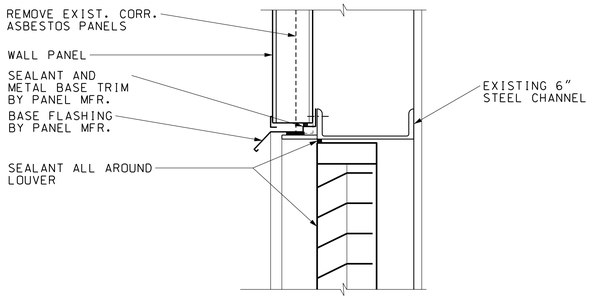

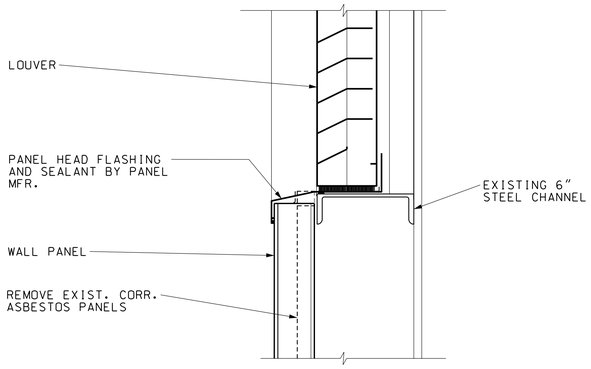

1 A2.5 SECTION - LOUVER
SCALE: 3" = 1'-0" 0 2" 4" 6" 8"

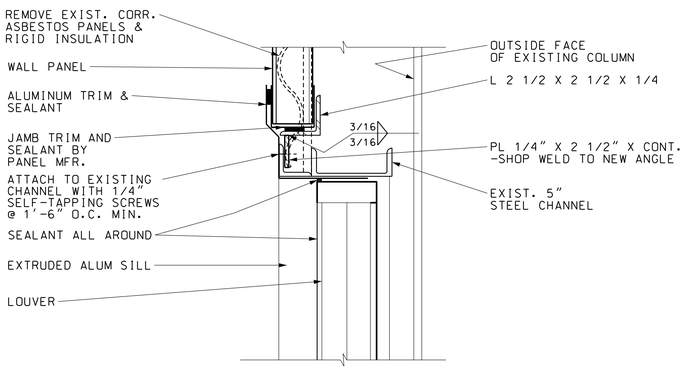

2 A2.5 JAMB DETAIL - LOUVER
SCALE: 3" = 1'-0" 0 2" 4" 6" 8"

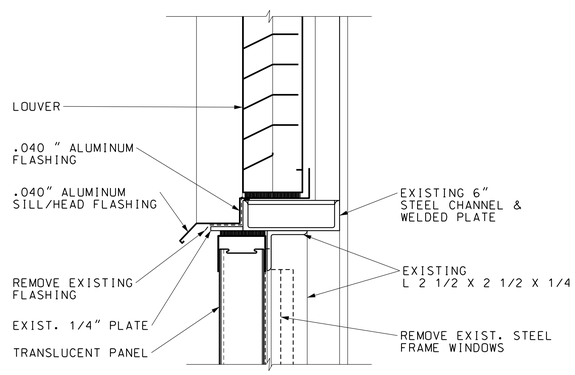

3 A2.5 LOUVER/TRANSLUCENT PANEL
SCALE: 3" = 1'-0" 0 2" 4" 6" 8"

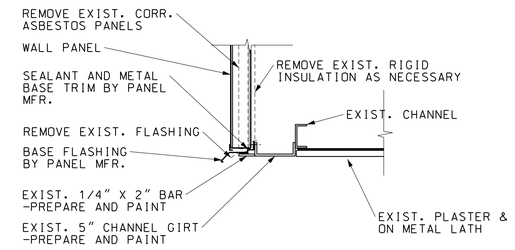

4 A2.5 HEAD DETAIL @ ENTRY
SCALE: 1 1/2" = 1'-0" 0 6" 1'

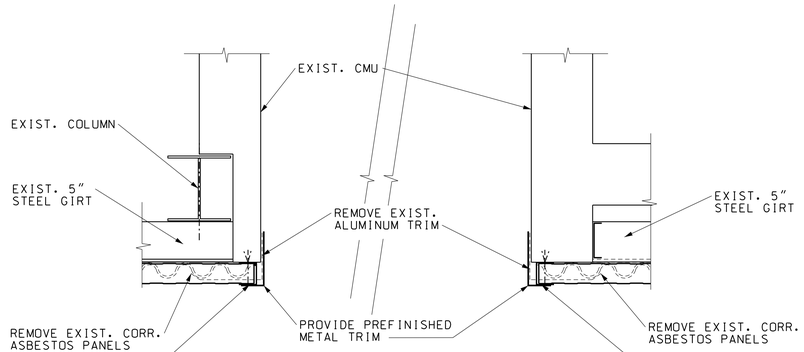

5 A2.5 PANEL TERMINATION @ ENTRY
SCALE: 1 1/2" = 1'-0" 0 6" 1'

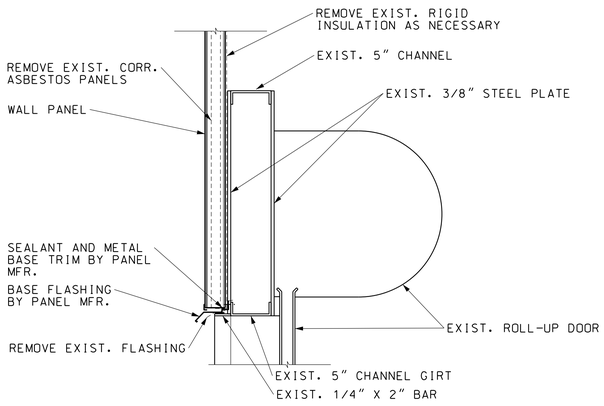

6 A2.5 HEAD - ROLL-UP DOOR
SCALE: 1 1/2" = 1'-0" 0 6" 1'

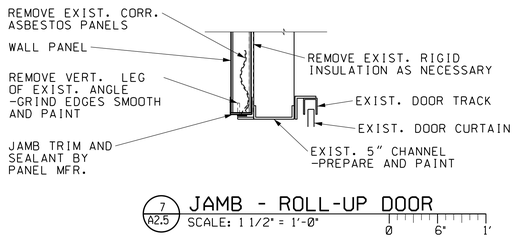

7 A2.5 JAMB - ROLL-UP DOOR
SCALE: 1 1/2" = 1'-0" 0 6" 1'

WORK DESCRIBED ON THIS SHEET APPLIES TO ADDITIVE ALTERNATE 2

WARNING

DO NOT SCALE THIS DRAWING

THIS DRAWING WAS DESIGNED TO BE PRINTED AT A NASA SHEET SIZE: MSFC STD. SIZE 40" X 28"

PRELIMINARY CADD DWG.

CHANGES TO THIS DRAWING SHALL BE MADE ON CADD ONLY.

3143268 09-05-12 ROB

LATEST CADD UPDATE: 10-22-13 BY: ROB 03:30 PM

REV.	BY	DATE	REVISION	C.I. NO.	APPROVED

Marshall Space Flight Center
Huntsville, Alabama 35812

WORK REQUEST NO. 3143268

BUILDING 4619
REPLACE ASBESTOS SIDING
(BUILDINGS 4755/4619)

ARCHITECTURAL: WALL PANEL, LOUVER, DOOR DETAILS

AE FIRM: KAYA Associates, Inc.		NASA AE CONTRACT NO. NASB- NNM11AA39C
SUBMITTED: DAVID A. SELLERS	APPROVAL RECOMMENDED: AD22 PROJECT A/E	APPROVED:
AE: DATE:	APPROVAL RECOMMENDED: AD22 SUPPORT A/E	AB22 GROUP LEAD: DATE:
DESIGNED BARTON / DRAWN BARTON / CHECKED DANIELL	APPROVAL RECOMMENDED: KAYA Associates, Inc.	DRAWING NO. FAC-GJ-4619-A2.5
SCALE: AS NOTED	SPEC. NO. FAC M5052	

SIGNATURES ON INDEX SHEET INDICATE ACCEPTANCE OF THIS SHEET

REF. NO. A2.5 OF 6

MSFC-FORM 232 REV. 8-21-89-RCL

MSFC MASTER BID DISK 11-18-2013

Projects*4619*gj-3143268 - Replace Asbestos Siding*A2-5.dgn

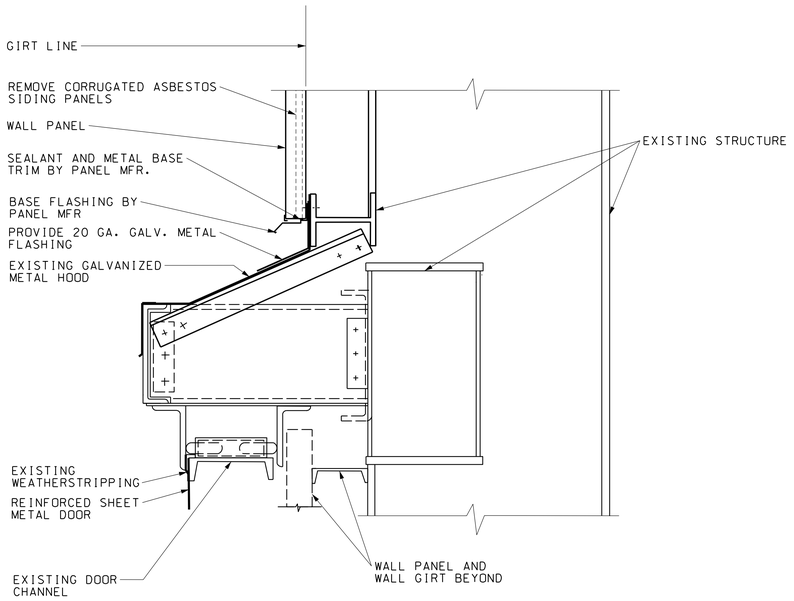

1 A2.6 SLIDING DOOR HEAD
SCALE: 1 1/2" = 1'-0" 0 6" 1'

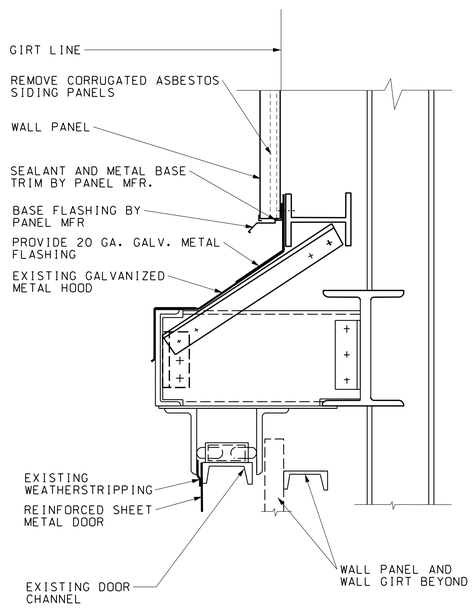

2 A2.6 SLIDING DOOR HEAD
SCALE: 1 1/2" = 1'-0" 0 6" 1'

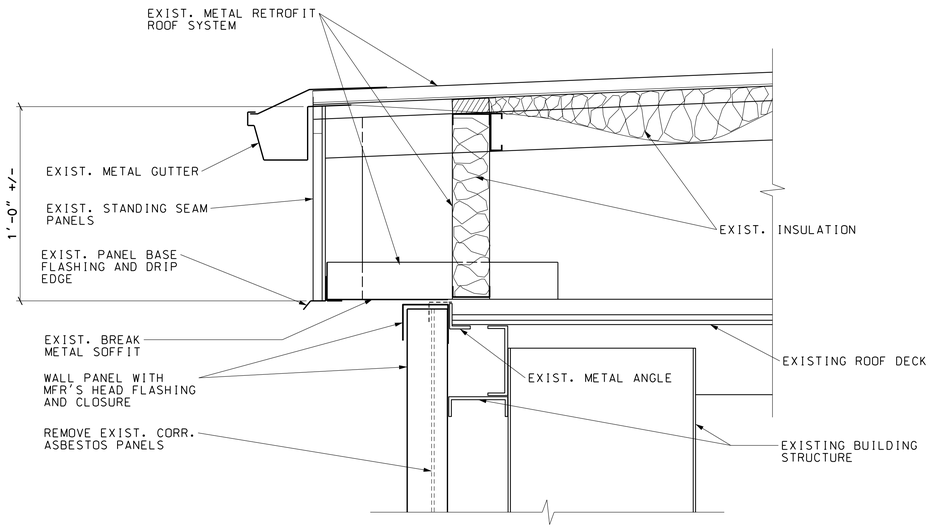

5 A2.6 EAVE DETAIL
SCALE: 3" = 1'-0" 0 2" 4" 6" 8"

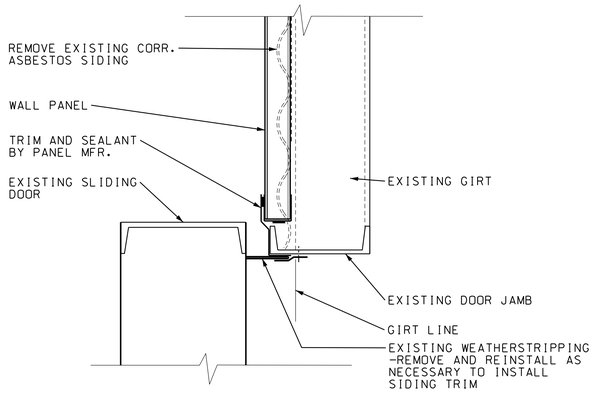

3 A2.6 SLIDING DOOR JAMB
SCALE: 1 1/2" = 1'-0" 0 6" 1'

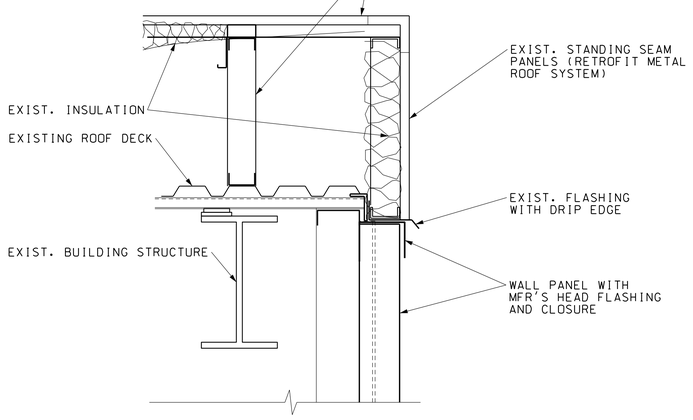

4 A2.6 RAKE DETAIL
SCALE: 3" = 1'-0" 0 2" 4" 6" 8"

WORK DESCRIBED ON THIS SHEET APPLIES TO ADDITIVE ALTERNATE 2

WARNING
DO NOT SCALE THIS DRAWING
THIS DRAWING WAS DESIGNED TO BE PRINTED AT A NASA SHEET SIZE: MSFC STD. SIZE 40" X 28"

PRELIMINARY CADD DWG.
CHANGES TO THIS DRAWING SHALL BE MADE ON CADD ONLY.
3143268 10-01-12 ROB
LATEST CADD UPDATE: 08-28-13 07:25 AM
BY: ROB

REV.	BY.	DATE	REVISION	C.I. NO.	APPROVED

Marshall Space Flight Center
Huntsville, Alabama 35812

WORK REQUEST NO. 3143268

BUILDING 4619
REPLACE ASBESTOS SIDING
(BUILDINGS 4755/4619)
ARCHITECTURAL: SLIDING DOOR DETAILS

AE FIRM: KAYA Associates, Inc.
NASA AE CONTRACT NO. NAS8- NNM11AA39C

SUBMITTED: DAVID A. SELLERS		APPROVAL RECOMMENDED: AD22 PROJECT A/E	APPROVED:
AE:	DATE:	APPROVAL RECOMMENDED: AD22 SUPPORT A/E	AD22 GROUP LEAD / DATE:
DESIGNED BARTON		APPROVAL RECOMMENDED: KAYA Associates, Inc.	DRAWING NO. FAC-GJ-4619-A2.6
DRAWN BARTON			
CHECKED DANIELL			
SCALE: AS NOTED		SPEC. NO. FAC M5052	

SIGNATURES ON INDEX SHEET INDICATE ACCEPTANCE OF THIS SHEET

REF. NO. A2.6 OF 6

MSFC-FORM 232 REV. 8-21-89-RCL

MSFC MASTER BID DISK 11-18-2013

Projects*4619*gj-3143268 - Replace Asbestos Siding*A2-6.dgn

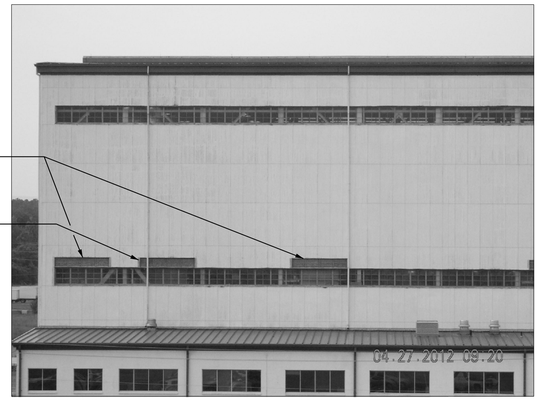

P1 ME1.1 VIEW FROM NORTH
NOT TO SCALE

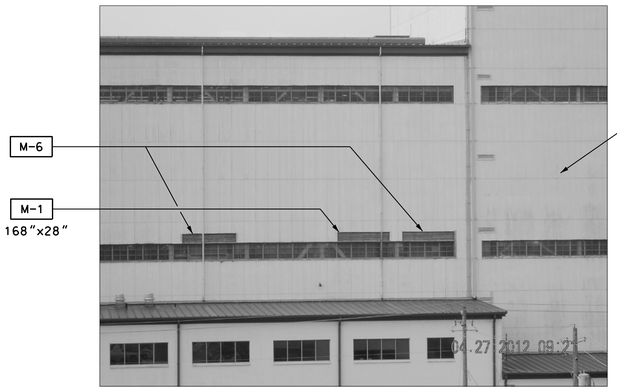

P2 ME1.1 VIEW FROM NORTH
NOT TO SCALE

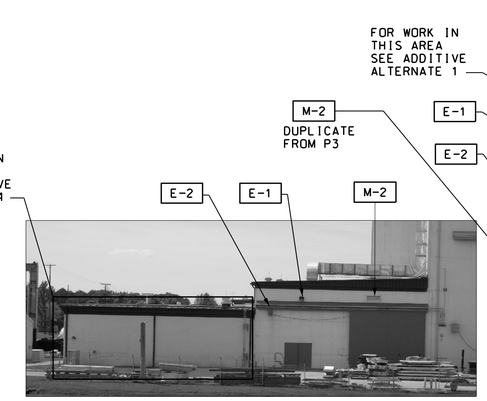

P3 ME1.1 VIEW FROM EAST
NOT TO SCALE

P4 ME1.1 VIEW FROM EAST
NOT TO SCALE

P5 ME1.1 VIEW FROM EAST
NOT TO SCALE

WORK DESCRIBED ON THIS SHEET APPLIES TO ADDITIVE ALTERNATE 2

ASBESTOS WARNING

EXTERIOR WALL PANELS CONTAIN ASBESTOS. ASBESTOS CONTENT OF THE WALL PANELS IS NOT CONSIDERED FRIABLE. INSULATION AND MASTIC ON PIPING AND DUCTWORK CONTAIN ASBESTOS. ASBESTOS WORK SHALL COMPLY WITH SPECIFICATIONS, SECTION 02080 AND SHALL MEET ALL OSHA AND EPA REQUIREMENTS.

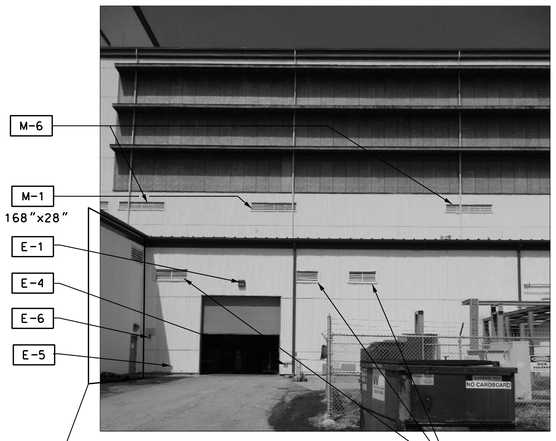

P7 ME1.1 VIEW FROM SOUTH
NOT TO SCALE

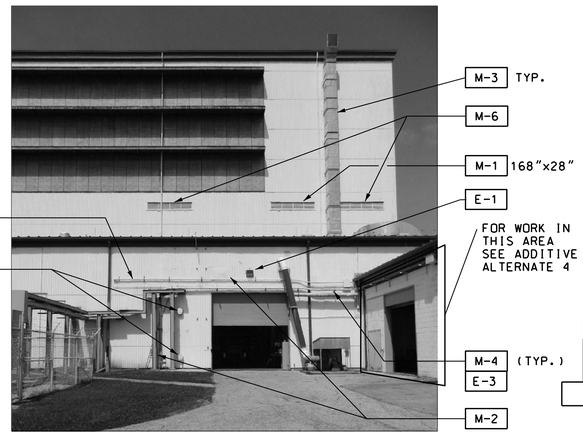

P8 ME1.1 VIEW FROM SOUTH
NOT TO SCALE

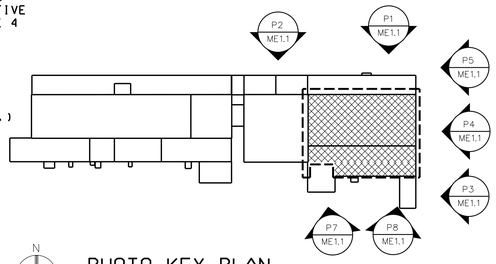

N
PHOTO KEY PLAN
NOT TO SCALE

GENERAL NOTE (ADDITIVE ALTERNATE 2)

G1. COORDINATE THE SHUTDOWN OF UTILITIES AND SYSTEMS AS NEEDED TO PERFORM REMOVAL AND REPLACEMENT OR DEMOLITION OF INDICATED ITEMS.

G2. EXTEND MECHANICAL AND ELECTRICAL COMPONENTS AS NEEDED TO ACCOMMODATE THE NEW THICKER WALL PANEL.

MECHANICAL NOTES (ADDITIVE ALTERNATE 2)

M-1 REMOVE EXISTING LOUVER TO ACCOMMODATE THE REMOVAL OF THE EXISTING SIDING AND THE INSTALLATION OF THE NEW. PROVIDE NEW LOUVER UPON THE INSTALLATION OF THE NEW SIDING. DIMENSIONS ARE APPROXIMATE AND CONTRACTOR SHALL FIELD VERIFY LOUVER DIMENSIONS.

M-2 DEMOLISH EXISTING WALL LOUVER TO ACCOMMODATE THE REMOVAL OF THE EXISTING SIDING.

M-3 REMOVE EXISTING DUCT SUPPORTS TO ACCOMMODATE THE REMOVAL OF THE EXISTING SIDING AND THE INSTALLATION OF THE NEW. REINSTALL DUCT SUPPORTS UPON THE INSTALLATION OF THE NEW SIDING.

M-4 REMOVE EXISTING PIPE SUPPORTS AND ASSOCIATED HARDWARE TO ACCOMMODATE THE REMOVAL OF THE EXISTING SIDING AND THE INSTALLATION OF THE NEW. PROVIDE NEW PIPE SUPPORTS AND ASSOCIATED HARDWARE UPON THE INSTALLATION OF THE NEW SIDING.

M-5 DEMOLISH EXISTING DUCT WORK PENETRATING EXTERIOR WALL TO ACCOMMODATE THE REMOVAL OF THE EXISTING SIDING AND THE INSTALLATION OF THE NEW.

M-6 DEMOLISH EXISTING WALL LOUVER AND ALL ASSOCIATED DUCTWORK (APPROXIMATELY 10 FT.) UPSTREAM OF HEATING AND VENTILATING UNIT TO ACCOMMODATE THE REMOVAL OF THE EXISTING SIDING.

ELECTRICAL NOTES (ADDITIVE ALTERNATE 2)

E-1 REMOVE EXISTING LIGHT FIXTURE TO ACCOMMODATE THE REMOVAL OF THE EXISTING SIDING. REINSTALL UPON THE INSTALLATION OF THE NEW SIDING. PROVIDE NEW ANCHORS TO PROPERLY SUPPORT LIGHT FIXTURE.

E-2 REMOVE EXISTING SLIDING DOOR CORD REEL ASSEMBLY TO ACCOMMODATE THE REMOVAL OF THE EXISTING SIDING. RE INSTALL UPON THE INSTALLATION OF THE NEW SIDING. PROVIDE NEW SUPPORTS AND ANCHORS.

E-3 REMOVE EXISTING CONDUIT SUPPORT TO ACCOMMODATE THE REMOVAL OF THE EXISTING SIDING. REINSTALL UPON THE INSTALLATION OF THE NEW SIDING. CLOSELY COORDINATE CONDUIT SUPPORT REMOVAL WITH SIDING INSTALLATION AND MECHANICAL WORK.

E-4 REMOVE EXISTING PUSH BUTTON STATION TO ACCOMMODATE THE REMOVAL OF THE EXISTING SIDING. REINSTALL UPON THE INSTALLATION OF THE NEW SIDING.

E-5 REMOVE EXISTING GFI DUPLEX RECEPTACLE TO ACCOMMODATE THE REMOVAL OF THE EXISTING SIDING. REINSTALL UPON THE INSTALLATION OF THE NEW SIDING.

E-6 REMOVE EXISTING WARNING BEACON TO ACCOMMODATE THE REMOVAL OF THE EXISTING SIDING. REINSTALL UPON THE INSTALLATION OF THE NEW SIDING.

E-7 ALL MODIFICATIONS TO THE ELECTRICAL SYSTEM SHALL BE PERFORMED WITH THE POWER OFF. CONTRACTOR SHALL PROVIDE APPROPRIATE LOCK OUT/TAG OUT DEVICES. WHERE AN ELECTRICAL SHUTDOWN IS NOT FEASIBLE, AN ENERGIZED ELECTRICAL WORK PERMIT SHALL BE OBTAINED. REFER TO MWI 8715.1, ELECTRICAL SAFETY PROGRAM AND MSFC FORM 4462, ENERGIZED ELECTRICAL WORK PERMIT.

E-8 DETACH EXISTING LIGHTNING PROTECTION SLEEVES FROM SIDING. REATTACH AFTER INSTALLATION OF NEW SIDING.

WARNING

DO NOT SCALE THIS DRAWING

THIS DRAWING WAS DESIGNED TO BE PRINTED AT A NASA SHEET SIZE: MSFC STD. SIZE 40" X 28"

PRELIMINARY CADD DWG.

CHANGES TO THIS DRAWING SHALL BE MADE ON CADD ONLY.

3143268 06-28-12 GAB

LATEST CADD UPDATE: 08-28-13 04:03 PM BY: FLETCHER

REV.	BY	DATE	REVISION	C.I. NO.	APPROVED

Marshall Space Flight Center
Huntsville, Alabama 35812

WORK REQUEST NO. 3143268

BUILDING 4619
REPLACE ASBESTOS SIDING
(BUILDINGS 4755/4619)
DEMOLITION: PHOTOGRAPHS, NOTES

AE FIRM: KAYA Associates, Inc.			NASA AE CONTRACT NO. NAS8- NNM11AA39C
SUBMITTED: DAVID A. SELLERS		APPROVAL RECOMMENDED: AD22 PROJECT A/E	APPROVED:
AE:	DATE:	APPROVAL RECOMMENDED: AD22 SUPPORT A/E	AD22 GROUP LEAD / DATE:
DESIGNED: LUCAS/WASILEFSKY		APPROVAL RECOMMENDED: KAYA Associates, Inc.	DRAWING NO. FAC-GJ-4619-ME2.1
DRAWN: JANSEN/FLETCHER			
CHECKED: LANDERS/AJAYI			
SCALE: AS NOTED		SPEC. NO. FAC M5052	

SIGNATURES ON INDEX SHEET INDICATE ACCEPTANCE OF THIS SHEET

REF. NO. ME2.1 OF 1

MSFC-FORM 232 REV. 8-21-89-RCL

MSFC MASTER BID DISK 11-18-2013

rojects*4619*gj-3143268 - Replace Asbestos Siding*ME2.1.dgn

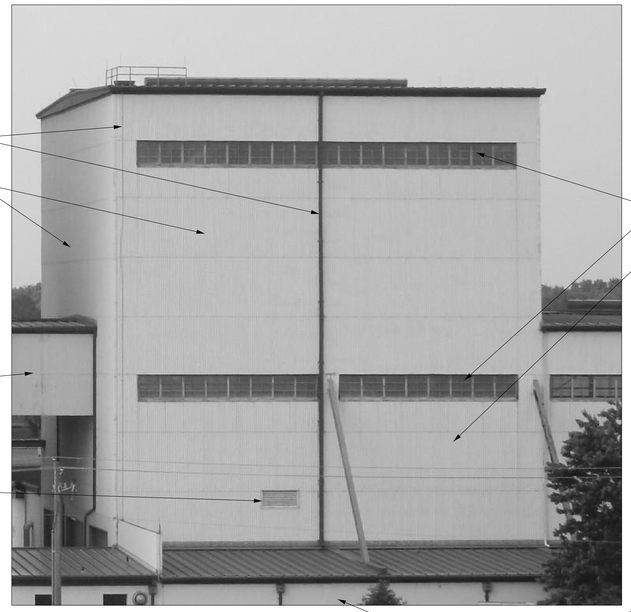

P1 A3.1 VIEW FROM NORTH
NOT TO SCALE

P2 A3.1 VIEW FROM NORTH
NOT TO SCALE

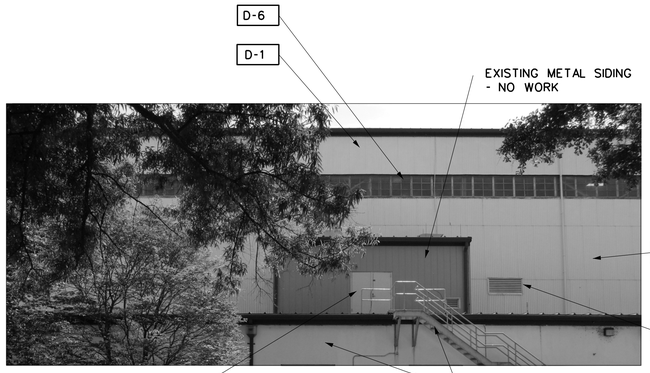

P3 A3.1 VIEW FROM NORTH
NOT TO SCALE

WORK DESCRIBED ON THIS SHEET
APPLIES TO ADDITIVE ALTERNATE 3

GENERAL DEMOLITION NOTES
(ADDITIVE ALTERNATE 3)

1. CONTRACTOR SHALL BE RESPONSIBLE FOR ALL MATERIAL DISPOSAL.
2. ALL DIMENSIONS INDICATED HEREIN ARE APPROXIMATE AND SHALL BE FIELD-VERIFIED BY CONTRACTOR.
3. CATEGORY 1, NON-FRIABLE ACM (CORRUGATED ASBESTOS SIDING, DUCT AND PIPE INSULATION) CAN BE REMOVED/DISPOSED OF BY A GENERAL CONTRACTOR (OR ASBESTOS ABATEMENT CONTRACTOR) AS LONG AS THE ACM REMAINS NON-FRIABLE, AND IS NOT CUT, DRILLED, SANDED OR OTHERWISE ABRADED TO CREATE A SITUATION WHEREIN FIBERS COULD BE RELEASED.
4. CONTRACTOR SHALL FOLLOW GENERAL GUIDELINES OUTLINED IN SPECIFICATION SECTIONS 02050 AND 02080.
5. ALL ACM SHALL BE DISPOSED OF IN THE APPROVED ON-BASE FACILITY WHICH IS LOCATED WITHIN 5 MILES OF PROJECT.
6. THE CONTRACTOR SHALL NOTIFY THE CONTACTS LISTED IN SPECIFICATION SECTION 02080 AT LEAST 10 DAYS PRIOR TO ACM REMOVAL. CONTRACTOR SHALL COORDINATE ALL WORK WITH COTR AND BUILDING OCCUPANTS.
7. CONTRACTOR QUALIFICATIONS: THE ASBESTOS ABATEMENT CONTRACTOR OR GENERAL CONTRACTOR SHALL BE ACCREDITED IN THE STATE OF ALABAMA TO PERFORM ASBESTOS REMOVAL.
8. MAINTAIN EGRESS PATHS FROM ALL EXITS TO GRADE LEVEL AT ALL STAGES OF DEMOLITION AND CONSTRUCTION. MINIMUM EGRESS WIDTHS SHALL BE AS WIDE AS THE EXIT DOORS THEY SERVE.

ARCHITECTURAL DEMOLITION NOTES
(ADDITIVE ALTERNATE 3)

- D-1 REMOVE EXISTING CORRUGATED ASBESTOS SIDING AND ASSOCIATED SIDING MATERIALS. PREPARE FOR INSTALLATION OF NEW INSULATED SIDING. CLEAN PURLINS, COLUMNS AND OTHER SURFACES OF DUST, RESIDUE AND DEBRIS AFTER REMOVAL OF EXISTING SIDING AND PRIOR TO INSTALLATION OF NEW SIDING PANELS.
- D-2 REMOVE EXISTING TRANSLUCENT PANELS.
- D-3 REMOVE EXISTING DOWNSPOUTS AND ASSOCIATED ACCESSORIES IN AREAS THAT SIDING IS TO BE REPLACED.
- D-4 EXISTING DOORS TO REMAIN.
- D-5 REMOVE EXISTING LOUVERS, ELECTRICAL FIXTURES AND DEVICES AS DIRECTED BY MECHANICAL AND ELECTRICAL DRAWINGS.
- D-6 REMOVE EXISTING STEEL FRAME INDUSTRIAL WINDOWS. PROTECT OPENINGS FROM ELEMENTS AFTER REMOVAL.
- D-7 NOT USED.
- D-8 EXISTING SOLAR SHADE STRUCTURES TO REMAIN. REMOVE EXISTING CORRUGATED STEEL ROOF PANELS FROM THE STRUCTURES. REMOVE EXISTING SEALANT. CLEAN STRUCTURAL STEEL AND PREPARE FOR PAINTING AND INSTALLATION OF NEW ROOF PANELS.

P4 A3.1 VIEW FROM NORTH
NOT TO SCALE

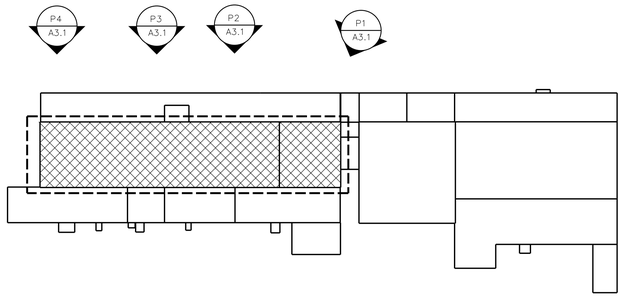

N PHOTO KEY PLAN
NOT TO SCALE

LEAD WARNING

COATINGS ON EXISTING STRUCTURAL STEEL AND STEEL WINDOWS CONTAIN LEAD. WORK SHALL COMPLY WITH CONTRACT DOCUMENTS AND ALL GOVERNING ENVIRONMENTAL AND HEALTH REGULATIONS.

ASBESTOS WARNING

EXTERIOR WALL PANELS CONTAIN ASBESTOS. ASBESTOS CONTENT OF THE WALL PANELS IS NOT CONSIDERED FRIABLE. INSULATION AND MASTIC ON PIPING AND DUCTWORK CONTAIN ASBESTOS. ASBESTOS WORK SHALL COMPLY WITH SPECIFICATIONS, SECTION 02080 AND SHALL MEET ALL OSHA AND EPA REQUIREMENTS.

WARNING
DO NOT SCALE THIS DRAWING
THIS DRAWING WAS DESIGNED TO BE PRINTED AT A NASA SHEET SIZE: MSFC STD. SIZE 40" X 28"

PRELIMINARY CADD DWG.
CHANGES TO THIS DRAWING SHALL BE MADE ON CADD ONLY.
3143268 04-11-12 SGF
LATEST CADD UPDATE: 08-28-13 04:05 PM
BY: ROB

REV.	BY	DATE	REVISION	C.I. NO.	APPROVED

Marshall Space Flight Center
Huntsville, Alabama 35812

WORK REQUEST NO. 3143268

BUILDING 4619
REPLACE ASBESTOS SIDING
(BUILDINGS 4755/4619)
DEMOLITION: PHOTOGRAPHS, NOTES

AE FIRM: KAYA Associates, Inc.
NASA AE CONTRACT NO.: NAS8-NNM11AA39C
SUBMITTED: DAVID A. SELLERS
APPROVAL RECOMMENDED: AD22 PROJECT A/E
APPROVED:
AE: DATE:
APPROVAL RECOMMENDED: AD22 SUPPORT A/E
AB22 GROUP LEAD: DATE:
DESIGNED BARTON
DRAWN BARTON
CHECKED DANIELL
APPROVAL RECOMMENDED: KAYA Associates, Inc.
DRAWING NO. FAC-GJ-4619-A3.1
SCALE: AS NOTED
SPEC. NO. FAC M5052

SIGNATURES ON INDEX SHEET INDICATE ACCEPTANCE OF THIS SHEET

REF. NO. A3.1 OF 7

MSFC-FORM 232 REV. 6-21-89-RCL

MSFC MASTER BID DISK 11-18-2013

Projects*4619*gj-3143268 - Replace Asbestos Siding*A3-1.dgn

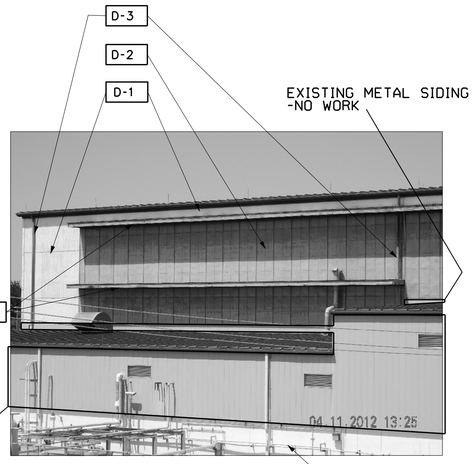

P1 A3.2 VIEW FROM SOUTH
NOT TO SCALE

P2 A3.2 VIEW FROM SOUTH
NOT TO SCALE

P3 A3.2 VIEW FROM SOUTH
NOT TO SCALE

P4 A3.2 VIEW FROM WEST
NOT TO SCALE

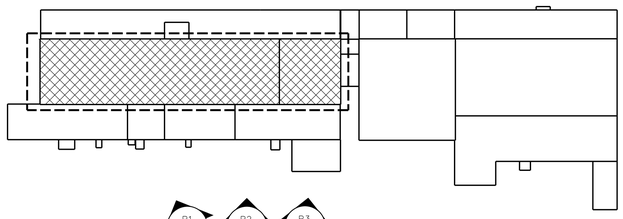

P1 A3.2 P2 A3.2 P3 A3.2

N
PHOTO KEY PLAN
NOT TO SCALE

WORK DESCRIBED ON THIS SHEET
APPLIES TO ADDITIVE ALTERNATE 3

WARNING
DO NOT SCALE THIS DRAWING
THIS DRAWING WAS DESIGNED TO BE PRINTED AT A NASA SHEET SIZE: MSFC STD. SIZE 40" X 28"

PRELIMINARY CADD DWG.
CHANGES TO THIS DRAWING SHALL BE MADE ON CADD ONLY.
3143268 04-11-12 SGF
LATEST CADD UPDATE: 08-28-13 07:32 AM
BY: ROB

REV.	BY	DATE	REVISION	C.I. NO.	APPROVED

Marshall Space Flight Center
Huntsville, Alabama 35812

WORK REQUEST NO. 3143268

BUILDING 4619
REPLACE ASBESTOS SIDING
(BUILDINGS 4755/4619)
DEMOLITION: PHOTOGRAPHS, NOTES

AE FIRM: KAYA Associates, Inc.
NASA AE CONTRACT NO. NASB- NNM11AA39C

SUBMITTED: DAVID A. SELLERS
APPROVAL RECOMMENDED: AD22 PROJECT A/E
APPROVED:
AE: DATE:
APPROVAL RECOMMENDED: AB22 GROUP LEAD DATE:
DESIGNED BARTON
DRAWN BARTON
CHECKED DANIELL
APPROVAL RECOMMENDED: AD22 SUPPORT A/E
KAYA Associates, Inc.
SCALE: AS NOTED
SPEC. NO. FAC M5052

SIGNATURES ON INDEX SHEET INDICATE ACCEPTANCE OF THIS SHEET

REF. NO. A3.2 OF 7

DRAWING NO. FAC-GJ-4619-A3.2

MSFC-FORM 232 REV. 8-21-89-RCL

MSFC MASTER BID DISK 11-18-2013

Projects*4619*gj-3143268 - Replace Asbestos Siding*A3-2.dgn

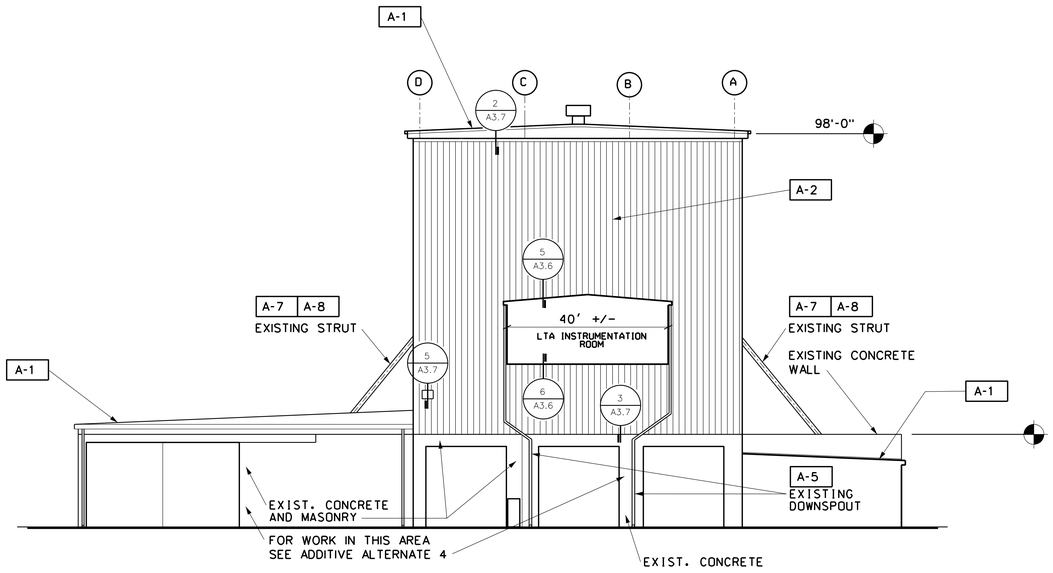

A A3.3 EAST ELEVATION - WEST HIGH-BAY
SCALE: 1/32"=1'0"

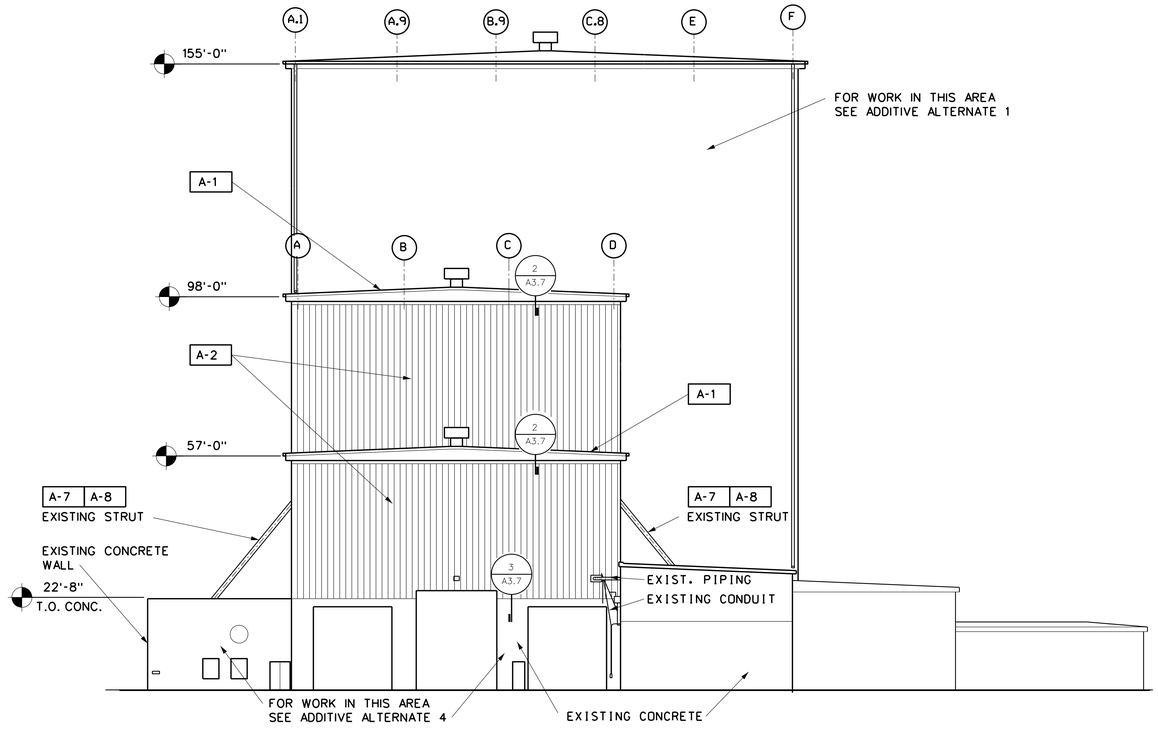

B A3.3 WEST ELEVATION - WEST HIGH-BAY
SCALE: 1/32"=1'0"

GENERAL NOTES
(ADDITIVE ALTERNATE 3)

A. CONTRACTOR SHALL MAINTAIN SCHEDULE. COORDINATE PROJECT WITH COTR FOR PROPER ORDER OF INSTALLATION AND ENSURE ALL EQUIPMENT AND FINISHES ARE PROTECTED AT ALL TIMES.

B. VERIFY ALL DIMENSIONS AND CONDITIONS AT THE SITE PRIOR TO BIDDING AND CONSTRUCTION.

C. REPAIR OR REPLACE ALL WORK DAMAGED DUE TO DEMOLITION OR CONSTRUCTION TO PRODUCE A COMPLETELY FINISHED JOB.

D. ALL MATERIAL IS SPECIFIED ON AN "APPROVED EQUAL" BASIS UNLESS OTHERWISE NOTED. APPROVAL WILL BE BY THE COTR.

E. ALL MATERIAL SPECIFIED SHALL BE INSTALLED IN ACCORDANCE WITH THE MANUFACTURER'S WRITTEN INSTRUCTIONS UNLESS OTHERWISE SHOWN.

F. ALL DETAILS AND SECTIONS SHOWN ON THE DRAWINGS ARE TYPICAL AND SHALL APPLY TO SIMILAR SITUATIONS THROUGHOUT THE ENTIRE PROJECT.

G. ELEVATIONS DO NOT SHOW ALL PENETRATIONS FOR CLARITY. REFER TO DEMOLITION PHOTOGRAPHS AND FIELD OBSERVATIONS TO CONFIRM FULL EXTENT OF PENETRATIONS AND OBSTRUCTIONS.

H. THE BUILDING WILL BE OCCUPIED DURING THIS WORK. THE CONTRACTOR, AND ALL WORKERS, SHALL COORDINATE THEIR WORK TO MINIMIZE IMPACT TO THOSE USING THE BUILDING AND NORMAL FUNCTIONS OF THE BUILDING.

I. MAINTAIN EGRESS PATHS FROM ALL EXISTS TO GRADE LEVEL, AT ALL STAGES OF DEMOLITION AND CONSTRUCTION. MINIMUM EGRESS WIDTHS SHALL BE AS WIDE AS THE EXIT DOORS THEY SERVE.

ARCHITECTURAL NOTES
(ADDITIVE ALTERNATE 3)

A-1	EXISTING ROOF.
A-2	PROVIDE INSULATED METAL PANELS.
A-3	PROVIDE LOUVERS (TYPICAL) -SEE MECHANICAL.
A-4	PROVIDE NEW TRANSLUCENT PANELS.
A-5	PROVIDE NEW DOWNSPOUTS AT LOCATIONS WHERE EXISTING DOWNSPOUTS WERE DESIGNATED FOR REMOVAL-TYPICAL.
A-6	SOLAR SHADES: PAINT EXPOSED STRUCTURE. PROVIDE NEW SEALANT. PROVIDE NEW CORRUGATED METAL ROOF PANELS. PANELS SHALL BE EQUAL TO "MBCI" PBU 22 GA. PANELS WITH GALVALUME PLUS FINISH. INSTALL IN ACCORDANCE WITH MANUFACTURER'S INSTALLATION INSTRUCTIONS, PROVIDING TAPE SEALERS, SEAM SEALERS, FLASHINGS, FASTENERS AND SEALANTS. PROVIDE RELATED FLASHINGS IN MATCHING GALVALUME PLUS FINISH.
A-7	PAINT EXISTING STRUCTURAL ELEMENTS.

(ARCHITECTURAL NOTES CONTINUED ON SHEET A3.4)

LEGEND

|||||	INSULATED METAL PANELS
▭	TRANSLUCENT PANELS

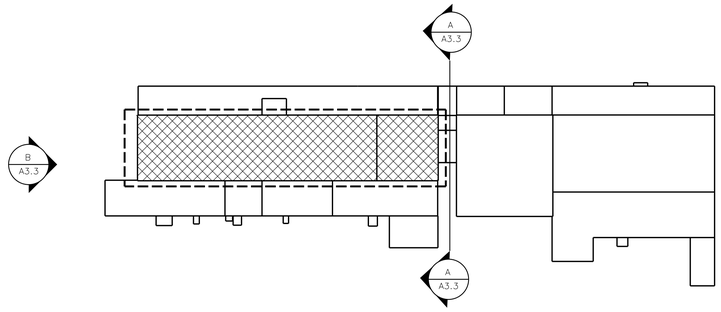

KEY PLAN
NOT TO SCALE

WORK DESCRIBED ON THIS SHEET APPLIES TO ADDITIVE ALTERNATE 3

WARNING
DO NOT SCALE THIS DRAWING
THIS DRAWING WAS DESIGNED TO BE PRINTED AT A NASA SHEET SIZE: MSFC STD. SIZE 40" X 28"

PRELIMINARY CADD DWG.
CHANGES TO THIS DRAWING SHALL BE MADE ON CADD ONLY.
3143268 - - ROB
LATEST CADD UPDATE: 09-24-13 07:25 AM
BY: ROB

REV.	BY	DATE	REVISION	C.I. NO.	APPROVED

Marshall Space Flight Center
Huntsville, Alabama 35812

WORK REQUEST NO. 3143268

BUILDING 4619
REPLACE ASBESTOS SIDING
(BUILDINGS 4755/4619)
ARCHITECTURAL: ELEVATIONS

AE FIRM: KAYA Associates, Inc.
NASA AE CONTRACT NO. NASS- NNM11AA39C

SUBMITTED: DAVID A. SELLERS		APPROVAL RECOMMENDED: AD22 PROJECT A/E	APPROVED:
AE:	DATE:	APPROVAL RECOMMENDED: AD22 SUPPORT A/E	AB22 GROUP LEAD / DATE:
DESIGNED BARTON		APPROVAL RECOMMENDED: KAYA Associates, Inc.	DRAWING NO. FAC-GJ-4619-A3.3
DRAWN BARTON			
CHECKED DANIELL			
SCALE: AS NOTED		SPEC. NO. FAC M5052	

SIGNATURES ON INDEX SHEET INDICATE ACCEPTANCE OF THIS SHEET

REF. NO. A3.3 OF 7

MSFC-FORM 232 REV. 8-21-89-RCL

MSFC MASTER BID DISK 11-18-2013

Projects*4619*gj-3143268 - Replace Asbestos Siding*A3-3.dgn

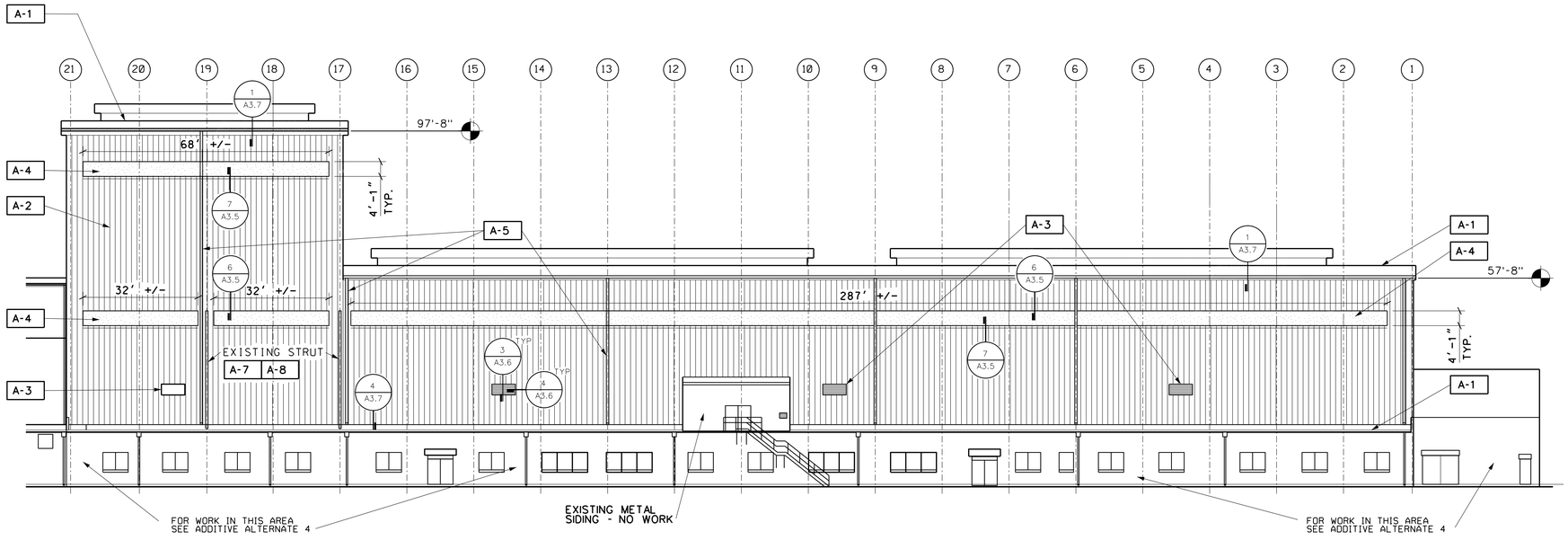

NORTH ELEVATION - EAST HIGH-BAY
SCALE: 1/16"=1'0"

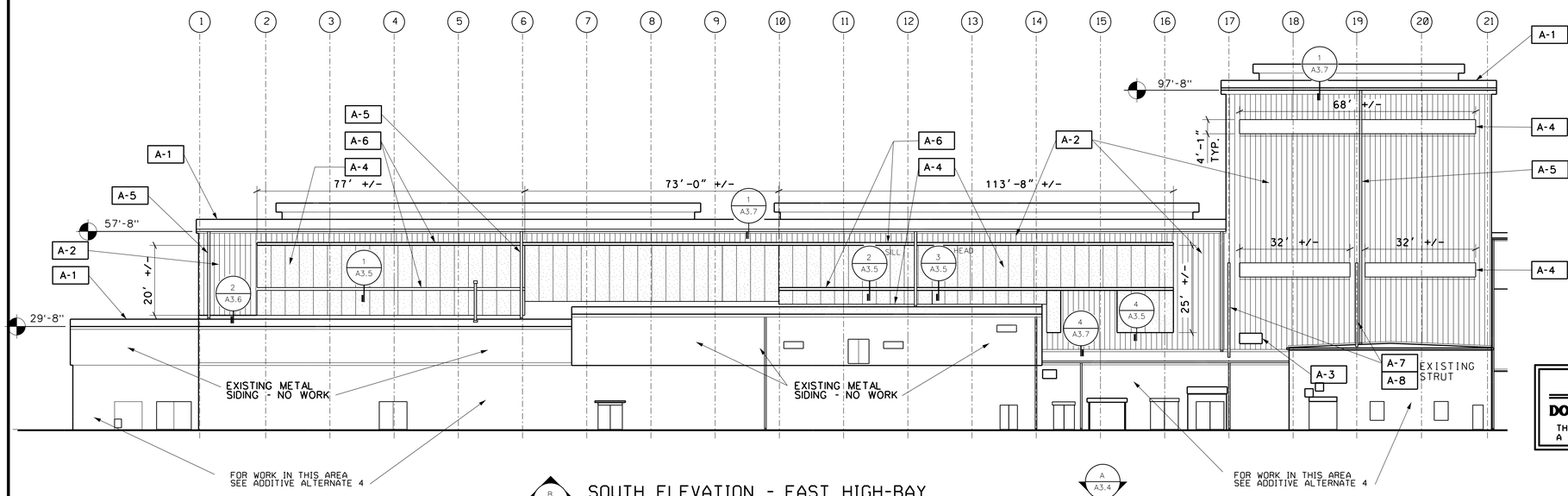

SOUTH ELEVATION - EAST HIGH-BAY
SCALE: 1/16"=1'0"

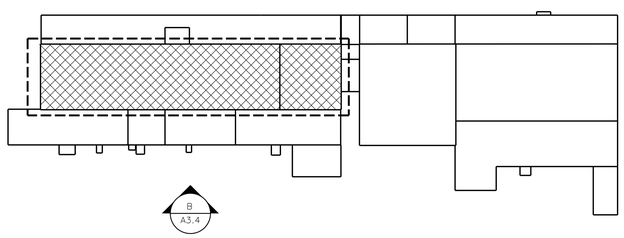

N

KEY PLAN
NOT TO SCALE

ARCHITECTURAL NOTES CONTINUED FROM SHEET A3.3
(ADDITIVE ALTERNATE 3)

A-8 EXISTING STEEL STRUCTURE. PROVIDE FLASHING AT PENETRATION OF SIDING SIMILAR TO DETAIL 1/A3.6.

A-9 AFTER SIDING IS INSTALLED, REINSTALL EXISTING BUILDING SIGNAGE. REPLACE DAMAGED SIGNAGE WITH NEW. MATCH IN-KIND (TYPICAL).

COLOR SCHEME:

THE COLOR SCHEME TO BE USED WILL LOOK MUCH LIKE THE EXISTING. FINAL COLOR OF PRE-FINISHED PANELS AND TRIM WILL BE SELECTED BY THE COTR FROM THE PANEL MANUFACTURER'S STANDARD COLORS. PAINT COLORS WILL BE SELECTED BASED ON THE PANELS AND TRIM COLORS ACTUALLY SELECTED FOR USE.

METAL PANELS: THERE WILL BE ONE COLOR OF INSULATED METAL PANELS.

METAL TRIM COLORS: THERE WILL BE TWO COLORS USED.

TRIM COLOR 1. TRIM TO MATCH PANEL COLOR. DOWNSPOUTS TO MATCH PANEL COLOR.
TRIM COLOR 2. SOME OR MOST OF THE TRIM AT EAVES, FASCIA, SOFFIT AND GUTTERS WILL BE THE CLOSEST BLUE FROM THE MANUFACTURER'S STANDARD COLORS TO BLUE ROOF CURRENTLY ON THE BUILDING.

PAINT COLORS: ITEMS TO BE PAINTED SHALL MATCH EXISTING COLORS AS PRACTICABLE. SUBMIT COLOR SAMPLES FOR AREAS THAT SUFFER FROM EXCESSIVE FADING AND PAINT DEGRADATION.

LEGEND
- INSULATED METAL PANELS
- TRANSLUCENT PANELS

WORK DESCRIBED ON THIS SHEET APPLIES TO ADDITIVE ALTERNATE 3

WARNING
DO NOT SCALE THIS DRAWING
THIS DRAWING WAS DESIGNED TO BE PRINTED AT A NASA SHEET SIZE: MSFC STD. SIZE 40" X 28"

PRELIMINARY CADD DWG.
CHANGES TO THIS DRAWING SHALL BE MADE ON CADD ONLY.
3143268 06-29-12 ROB
LATEST CADD UPDATE: 08-28-13 07:35 AM
BY: ROB

REV.	BY	DATE	REVISION	C.I. NO.	APPROVED

Marshall Space Flight Center
Huntsville, Alabama 35812

WORK REQUEST NO. 3143268

BUILDING 4619
REPLACE ASBESTOS SIDING
(BUILDINGS 4755/4619)
ARCHITECTURAL: ELEVATIONS

AE FIRM: KAYA Associates, Inc.		NASA AE CONTRACT NO. NAS8- NNM11AA39C
SUBMITTED: DAVID A. SELLERS	APPROVAL RECOMMENDED: AD22 PROJECT A/E	APPROVED:
AE: DATE:	APPROVAL RECOMMENDED: AD22 SUPPORT A/E	AD22 GROUP LEAD: DATE:
DESIGNED BARTON DRAWN BARTON CHECKED DANIELL	APPROVAL RECOMMENDED: KAYA Associates, Inc.	DRAWING NO. FAC-GJ-4619-A3.4
SCALE: AS NOTED	SPEC. NO. FAC M5052	

SIGNATURES ON INDEX SHEET INDICATE ACCEPTANCE OF THIS SHEET

REF. NO. A3.4 OF 7

MSFC-FORM 232 REV. 8-21-89-RCL

MSFC MASTER BID DISK 11-18-2013

Projects*4619*gj-3143268 - Replace Asbestos Siding*A3-4.dgn

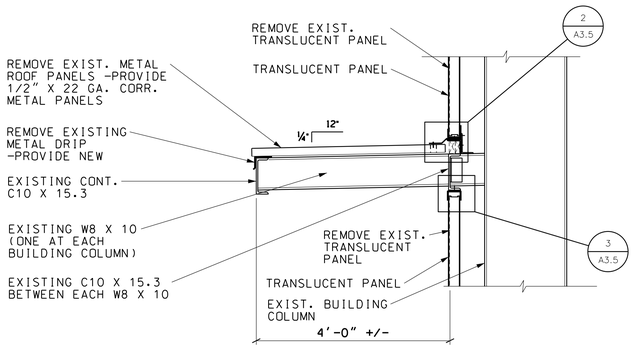

1 A3.5 SOLAR SHADE DETAIL
SCALE: 3/4" = 1'-0" 0 1' 2'

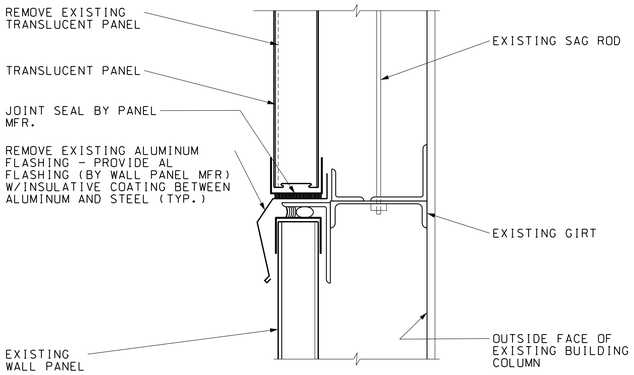

4 A3.5 SILL - TRANSLUCENT PANEL DETAIL
SCALE: 3" = 1'-0" 0 2" 4" 6" 8"

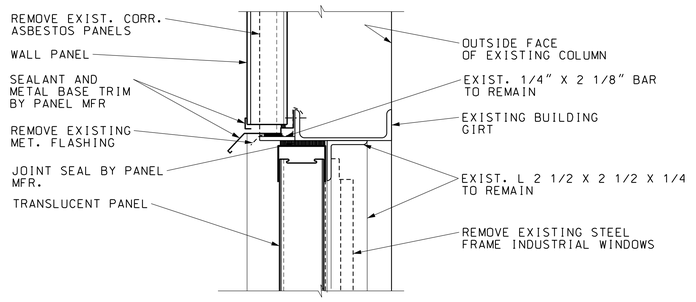

6 A3.5 HEAD - TRANSLUCENT PANEL DETAIL
SCALE: 3" = 1'-0" 0 2" 4" 6" 8"

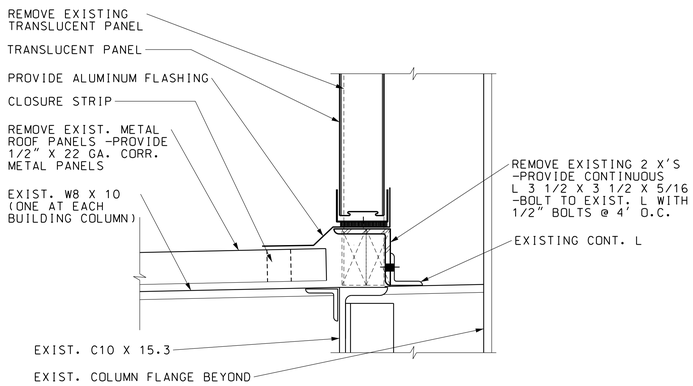

2 A3.5 SILL - TRANSLUCENT PANEL DETAIL
SCALE: 3" = 1'-0" 0 2" 4" 6" 8"

5 A3.5 NOT USED

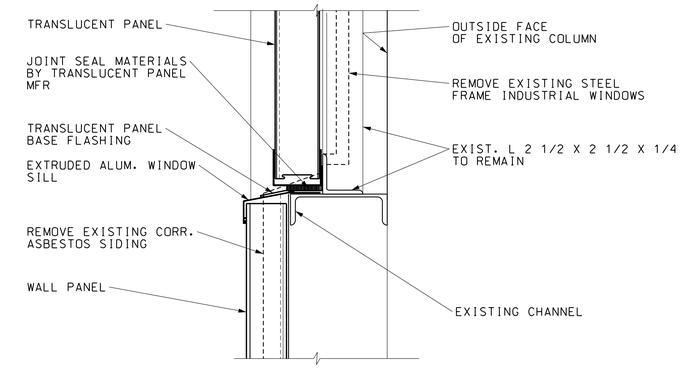

7 A3.5 SILL - TRANSLUCENT PANEL DETAIL
SCALE: 3" = 1'-0" 0 2" 4" 6" 8"

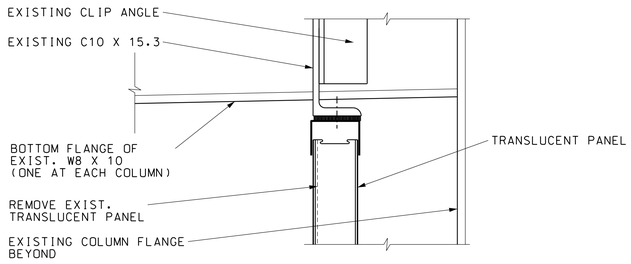

3 A3.5 HEAD - TRANSLUCENT PANEL DETAIL
SCALE: 3" = 1'-0" 0 2" 4" 6" 8"

WORK DESCRIBED ON THIS SHEET APPLIES TO ADDITIVE ALTERNATE 3

WARNING
DO NOT SCALE THIS DRAWING
THIS DRAWING WAS DESIGNED TO BE PRINTED AT A NASA SHEET SIZE: MSFC STD. SIZE 40" X 28"

PRELIMINARY CADD DWG.
CHANGES TO THIS DRAWING SHALL BE MADE ON CADD ONLY.
3143268 08-27-12 ROB
LATEST CADD UPDATE: 09-24-13 06:40 AM BY: ROB

REV.	BY	DATE	REVISION	C.I. NO.	APPROVED

Marshall Space Flight Center
Huntsville, Alabama 35812

WORK REQUEST NO. 3143268

BUILDING 4619
REPLACE ASBESTOS SIDING
(BUILDINGS 4755/4619)
ARCHITECTURAL: TRANSLUCENT PANEL DETAILS

AE FIRM: KAYA Associates, Inc.
NASA AE CONTRACT NO: NAS8- NNM11AA39C

SUBMITTED: DAVID A. SELLERS		APPROVAL RECOMMENDED: AD22 PROJECT A/E	APPROVED:
AE:	DATE:	APPROVAL RECOMMENDED: AD22 SUPPORT A/E	AB22 GROUP LEAD / DATE:
DESIGNED BARTON		APPROVAL RECOMMENDED: KAYA Associates, Inc.	DRAWING NO. FAC-GJ-4619-A3.5
DRAWN BARTON			
CHECKED DANIELL			
SCALE: AS NOTED		SPEC. NO. FAC M5052	

SIGNATURES ON INDEX SHEET INDICATE ACCEPTANCE OF THIS SHEET

REF. NO. A3.5 OF 7

MSFC-FORM 252 REV. 8-21-89-RCL

MSFC MASTER BID DISK 11-18-2013

Projects*4619*gj-3143268 - Replace Asbestos Siding*A3-5.dgn

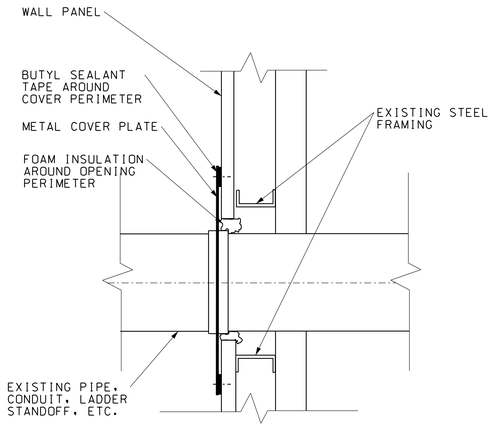

1 A3.6 TYPICAL WALL PENETRATION
SCALE: 1 1/2" = 1'-0" 0 6" 1'

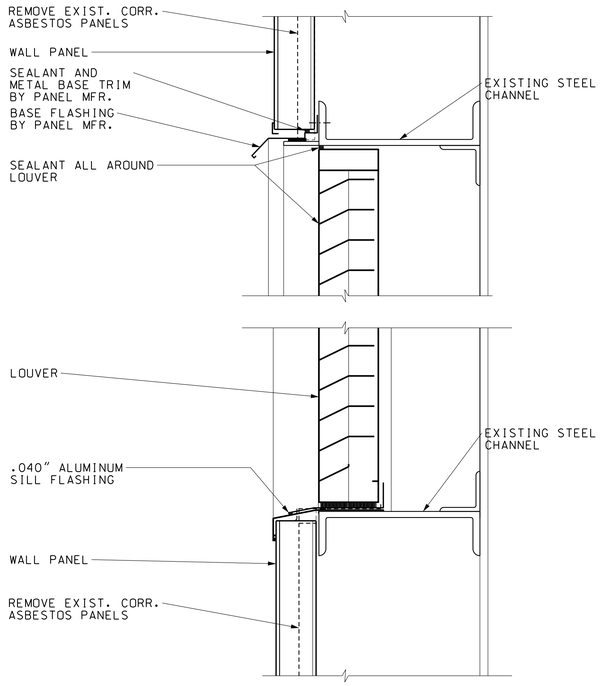

3 A3.6 SECTION - LOUVER
SCALE: 3" = 1'-0" 0 2" 4" 6" 8"

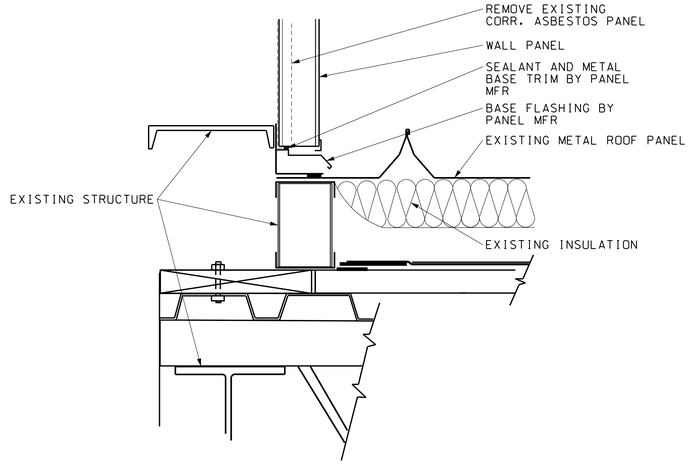

5 A3.6 PANEL TO MEZZANINE ROOF
SCALE: 3" = 1'-0" 0 2" 4" 6" 8"

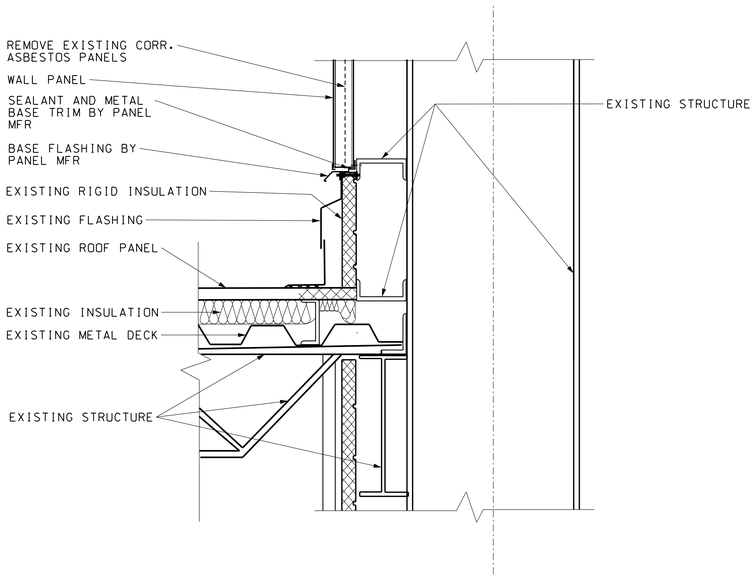

2 A3.6 WALL TO LOW ROOF
SCALE: 1 1/2" = 1'-0" 0 6" 1'

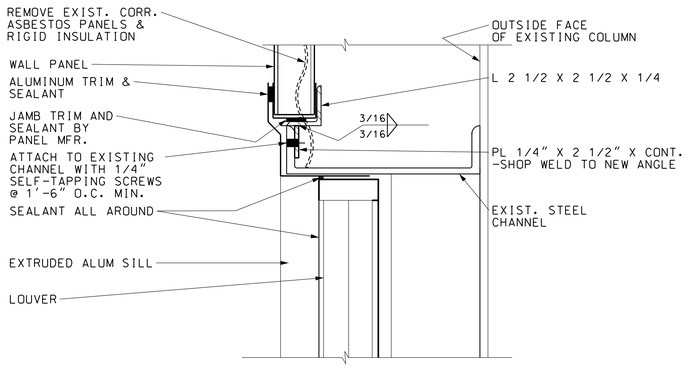

4 A3.6 JAMB - LOUVER
SCALE: 3" = 1'-0" 0 2" 4" 6" 8"

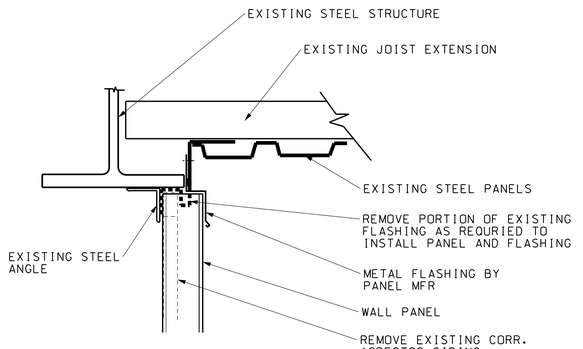

6 A3.6 PANEL TO MEZZANINE FLOOR
SCALE: 3" = 1'-0" 0 2" 4" 6" 8"

WARNING

DO NOT SCALE THIS DRAWING

THIS DRAWING WAS DESIGNED TO BE PRINTED AT A NASA SHEET SIZE: MSFC STD. SIZE 40" X 28"

PRELIMINARY CADD DWG.

CHANGES TO THIS DRAWING SHALL BE MADE ON CADD ONLY.

3143268 11-14-12 ROB

LATEST CADD UPDATE: 10-22-13 03:15 PM BY: ROB

WORK DESCRIBED ON THIS SHEET APPLIES TO ADDITIVE ALTERNATE 3

REV.	BY	DATE	REVISION	C.I. NO.	APPROVED

Marshall Space Flight Center
Huntsville, Alabama 35812

WORK REQUEST NO. 3143268

BUILDING 4619
REPLACE ASBESTOS SIDING
(BUILDINGS 4755/4619)

ARCHITECTURAL: DETAILS

AE FIRM: KAYA Associates, Inc.

NASA AE CONTRACT NO. NAS8- NNM11AA39C

SUBMITTED: DAVID A. SELLERS

APPROVAL RECOMMENDED: AD22 PROJECT A/E

APPROVED: AB22 GROUP LEAD DATE:

AE: DATE:

APPROVAL RECOMMENDED: AD22 SUPPORT A/E

DESIGNED BARTON
DRAWN BARTON
CHECKED DANIELL

APPROVAL RECOMMENDED: KAYA Associates, Inc.

SCALE: AS NOTED

SPEC. NO. FAC M5052

DRAWING NO. FAC-GB-4619-A1.6

SIGNATURES ON INDEX SHEET INDICATE ACCEPTANCE OF THIS SHEET

REF. NO. A3.6 OF 7

MSFC-FORM 232 REV. 6-21-89-RCL

MSFC MASTER BID DISK 11-18-2013

Projects*4619*gj-3143268 - Replace Asbestos Siding*A3-6.dgn

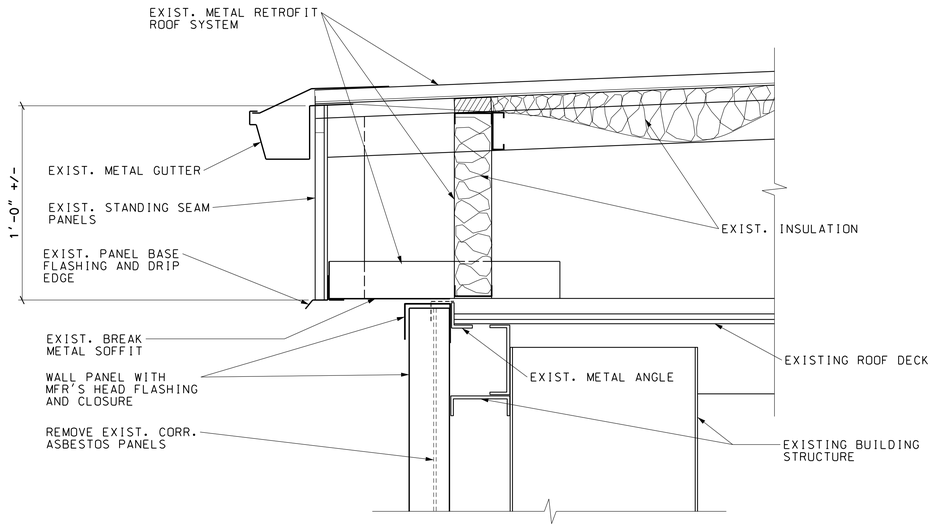

1 A3.7 EAVE DETAIL
SCALE: 3" = 1'-0"
0 2" 4" 6" 8"

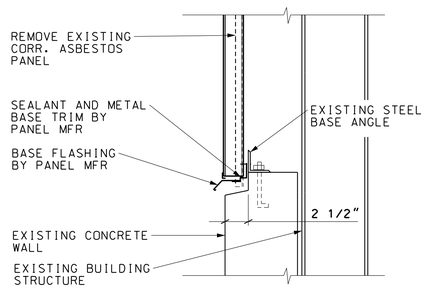

3 A3.7 WALL BASE DETAIL
SCALE: 1 1/2" = 1'-0"
0 6" 1'

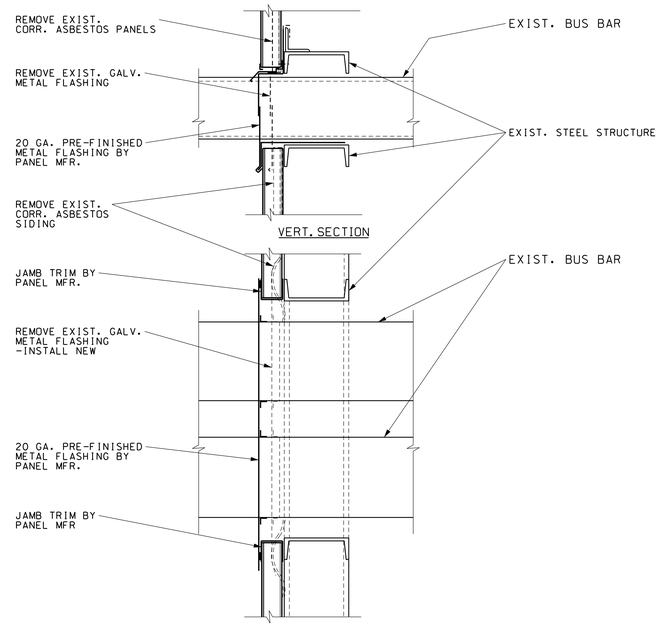

5 A3.7 BUS DUCT PENETRATION
SCALE: 1 1/2" = 1'-0"
0 6" 1'

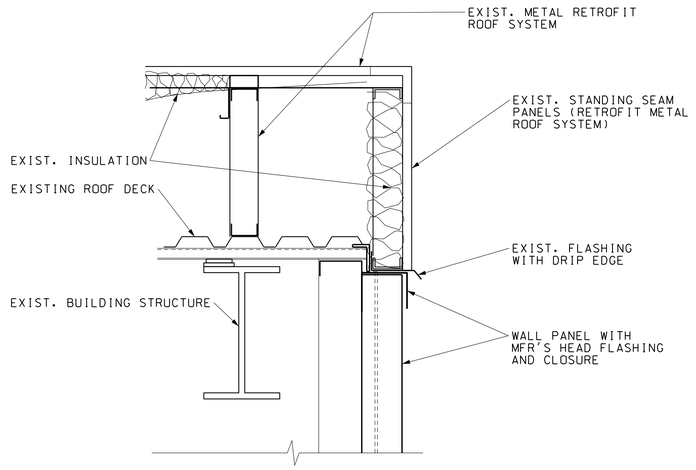

2 A3.7 RAKE DETAIL
SCALE: 3" = 1'-0"
0 2" 4" 6" 8"

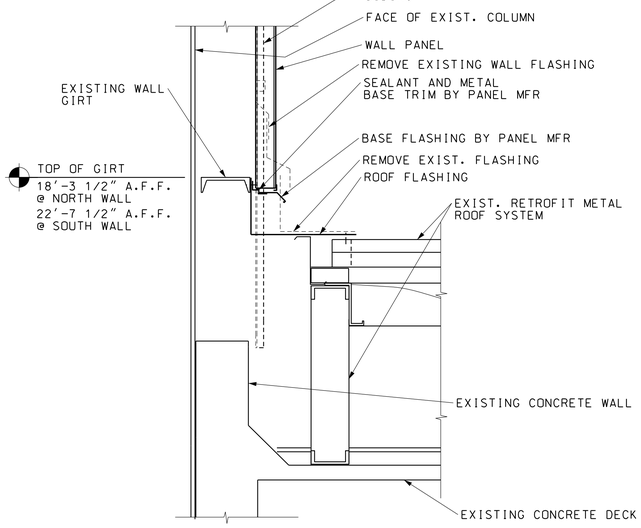

4 A3.7 WALL BASE DETAIL
SCALE: 1 1/2" = 1'-0"
0 6" 1'

WORK DESCRIBED ON THIS SHEET APPLIES TO ADDITIVE ALTERNATE 3

WARNING
DO NOT SCALE THIS DRAWING
THIS DRAWING WAS DESIGNED TO BE PRINTED AT A NASA SHEET SIZE: MSFC STD. SIZE 40" X 28"

PRELIMINARY CADD DWG.
CHANGES TO THIS DRAWING SHALL BE MADE ON CADD ONLY.
3143268
12-06-12 ROB
LATEST CADD UPDATE: 08-28-13 07:38 AM BY: ROB

REV.	BY	DATE	REVISION	C.I. NO.	APPROVED

Marshall Space Flight Center
Huntsville, Alabama 35812

WORK REQUEST NO. 3143268

BUILDING 4619
REPLACE ASBESTOS SIDING
(BUILDINGS 4755/4619)
ARCHITECTURAL: ROOF DETAILS

AE FIRM: KAYA Associates, Inc.
NASA AE CONTRACT NO. NAS8- NNM11AA39C

SUBMITTED: DAVID A. SELLERS		APPROVAL RECOMMENDED: AD22 PROJECT A/E	APPROVED:
AE:	DATE:	APPROVAL RECOMMENDED: AD22 SUPPORT A/E	AB22 GROUP LEAD / DATE:
DESIGNED BARTON		APPROVAL RECOMMENDED: KAYA Associates, Inc.	DRAWING NO. FAC-GJ-4619-A3.7
DRAWN BARTON			
CHECKED DANIELL			
SCALE: AS NOTED		SPEC. NO. FAC M5052	

SIGNATURES ON INDEX SHEET INDICATE ACCEPTANCE OF THIS SHEET

REF. NO. A3.7 OF 7

MSFC-FORM 232 REV. 8-21-89-RCL

MSFC MASTER BID DISK 11-18-2013

Projects*4619*gj-3143268 - Replace Asbestos Siding*A3-7.dgn

P1 ME3.1 VIEW FROM NORTH
NOT TO SCALE

P2 ME3.1 VIEW FROM NORTH
NOT TO SCALE

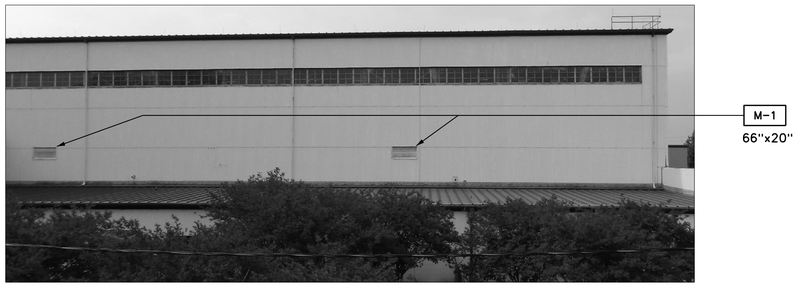

P3 ME3.1 VIEW FROM NORTH
NOT TO SCALE

P4 ME3.1 VIEW FROM NORTH
NOT TO SCALE

GENERAL NOTE (ADDITIVE ALTERNATE 3)

G1. COORDINATE THE SHUTDOWN OF UTILITIES AND SYSTEMS AS NEEDED TO PERFORM REMOVAL AND REPLACEMENT OR DEMOLITION OF INDICATED ITEMS.

G2. EXTEND MECHANICAL AND ELECTRICAL COMPONENTS AS NEEDED TO ACCOMMODATE THE NEW THICKER WALL PANEL.

MECHANICAL NOTE (ADDITIVE ALTERNATE 3)

M-1 REMOVE EXISTING LOUVER TO ACCOMMODATE THE REMOVAL OF THE EXISTING SIDING AND THE INSTALLATION OF THE NEW. PROVIDE NEW LOUVER UPON THE INSTALLATION OF THE NEW SIDING. DIMENSIONS ARE APPROXIMATE AND CONTRACTOR SHALL FIELD VERIFY LOUVER DIMENSIONS.

ELECTRICAL NOTES: (ADDITIVE ALTERNATE 3)

E-1 REMOVE EXISTING LIGHT FIXTURE TO ACCOMMODATE THE REMOVAL OF THE EXISTING SIDING. REINSTALL UPON THE INSTALLATION OF THE NEW SIDING. PROVIDE NEW ANCHORS TO PROPERLY SUPPORT LIGHT FIXTURE.

E-2 REMOVE EXISTING JUNCTION BOX TO ACCOMMODATE THE REMOVAL OF THE EXISTING SIDING AND THE INSTALLATION OF THE NEW. DEMOLISH CONDUIT AND WIRING BACK TO NEXT ACTIVE JUNCTION BOX OR DEVICE.

E-3 ALL MODIFICATIONS TO THE ELECTRICAL SYSTEM SHALL BE PERFORMED WITH THE POWER OFF. CONTRACTOR SHALL PROVIDE APPROPRIATE LOCK OUT/TAG OUT DEVICES. WHERE AN ELECTRICAL SHUTDOWN IS NOT FEASIBLE, AN ENERGIZED ELECTRICAL WORK PERMIT SHALL BE OBTAINED. REFER TO MWI 8715.1, ELECTRICAL SAFETY PROGRAM AND MSFC FORM 4462, ENERGIZED ELECTRICAL WORK PERMIT.

E-4 DETACH EXISTING LIGHTNING PROTECTION SLEEVES FROM SIDING. REATTACH AFTER INSTALLATION OF NEW SIDING.

ASBESTOS WARNING

EXTERIOR WALL PANELS CONTAIN ASBESTOS. ASBESTOS CONTENT OF THE WALL PANELS IS NOT CONSIDERED FRIABLE. INSULATION AND MASTIC ON PIPING AND DUCTWORK CONTAIN ASBESTOS. ASBESTOS WORK SHALL COMPLY WITH SPECIFICATIONS, SECTION 02080 AND SHALL MEET ALL OSHA AND EPA REQUIREMENTS.

WORK DESCRIBED ON THIS SHEET APPLIES TO ADDITIVE ALTERNATE 3

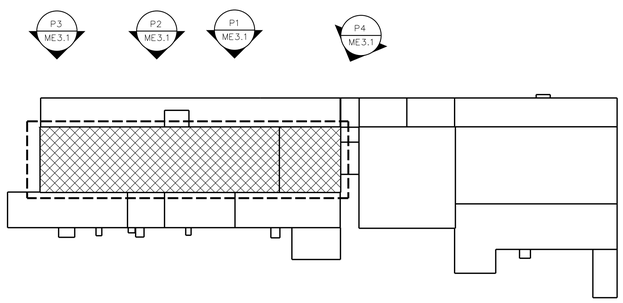

PHOTO KEY PLAN
NOT TO SCALE

WARNING

DO NOT SCALE THIS DRAWING

THIS DRAWING WAS DESIGNED TO BE PRINTED AT A NASA SHEET SIZE: MSFC STD. SIZE 40" X 28"

PRELIMINARY CADD DWG.

CHANGES TO THIS DRAWING SHALL BE MADE ON CADD ONLY.

3143268 06-28-12 GAB

LATEST CADD UPDATE: 08-28-13 04:05 PM

BY: FLETCHER

REV.	BY	DATE	REVISION	C.I. NO.	APPROVED

Marshall Space Flight Center
Huntsville, Alabama 35812

WORK REQUEST NO. 3143268

BUILDING 4619
REPLACE ASBESTOS SIDING
(BUILDINGS 4755/4619)
DEMOLITION: PHOTOGRAPHS, NOTES

AE FIRM: KAYA Associates, Inc.

NASA AE CONTRACT NO. NAS8- NNM11AA39C

SUBMITTED: DAVID A. SELLERS

APPROVAL RECOMMENDED: AD22 PROJECT A/E

APPROVED:

AE: DATE:

APPROVAL RECOMMENDED: AD22 SUPPORT A/E

AB22 GROUP LEAD DATE:

DESIGNED LUCAS/WASILEFSKY
DRAWN JANSEN/FLETCHER
CHECKED LANDERS/AJAYI

APPROVAL RECOMMENDED: KAYA Associates, Inc.

DRAWING NO. FAC-GJ-4619-ME3.1

SCALE: AS NOTED

SPEC. NO. FAC M5052

SIGNATURES ON INDEX SHEET INDICATE ACCEPTANCE OF THIS SHEET

REF. NO. ME3.1 OF 2

MSFC-FORM 252 REV. 8-21-89-RCL

MSFC MASTER BID DISK 11-18-2013

rojects*4619*gj-3143268 - Replace Asbestos Siding*ME3.1.dgn

M-1
66"×20"

P3 ME3.2 VIEW FROM SOUTH
NOT TO SCALE

P4 ME3.2 VIEW FROM WEST
NOT TO SCALE

FOR WORK IN THIS AREA
SEE ADDITIVE ALTERNATE 4

WORK DESCRIBED ON THIS SHEET
APPLIES TO ADDITIVE ALTERNATE 3

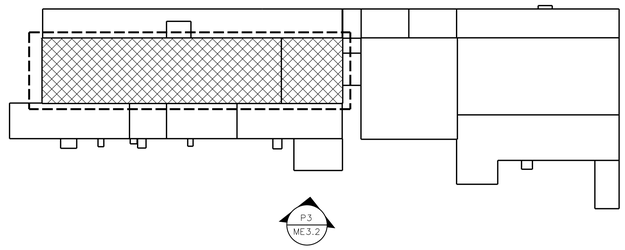

P4 ME3.2

P3 ME3.2

N
PHOTO KEY PLAN
NOT TO SCALE

WARNING
DO NOT SCALE THIS DRAWING
THIS DRAWING WAS DESIGNED TO BE PRINTED AT A NASA SHEET SIZE: MSFC STD. SIZE 40" X 28"

PRELIMINARY CADD DWG.
CHANGES TO THIS DRAWING SHALL BE MADE ON CADD ONLY.
3143268
06-28-12 GAB
LATEST CADD UPDATE: 12-03-12 10:15 AM
BY: B. JANSEN

REV.	BY	DATE	REVISION	C.I. NO.	APPROVED

Marshall Space Flight Center
Huntsville, Alabama 35812

WORK REQUEST NO. 3143268

BUILDING 4619
REPLACE ASBESTOS SIDING
(BUILDINGS 4755/4619)
DEMOLITION: PHOTOGRAPHS, NOTES

AE FIRM: KAYA Associates, Inc.
NASA AE CONTRACT NO. NAS8- NNM11AA39C

SUBMITTED: DAVID A. SELLERS		APPROVAL RECOMMENDED: AD22 PROJECT A/E	APPROVED:
AE:	DATE:	APPROVAL RECOMMENDED: AD22 SUPPORT A/E	AB22 GROUP LEAD / DATE:
DESIGNED LUCAS/WASILEFSKY		APPROVAL RECOMMENDED: KAYA Associates, Inc.	DRAWING NO. FAC-GJ-4619-ME3.2
DRAWN JANSEN/FLETCHER			
CHECKED LANDERS/AJAYI			
SCALE: AS NOTED		SPEC. NO. FAC M5052	

SIGNATURES ON INDEX SHEET INDICATE ACCEPTANCE OF THIS SHEET

REF. NO. ME3.2 OF 2

MSFC-FORM 232 REV. 8-21-89-RCL

MSFC MASTER BID DISK 11-18-2013

rojects*4619*gj-3143268 - Replace Asbestos Siding*ME3.2.dgn

P1 A4.1 VIEW FROM NORTH
NOT TO SCALE

P2 A4.1 VIEW FROM NORTH
NOT TO SCALE

EXISTING ALUMINUM STOREFRONT SYSTEM (NO WORK)

P3 A4.1 VIEW FROM NORTH
NOT TO SCALE

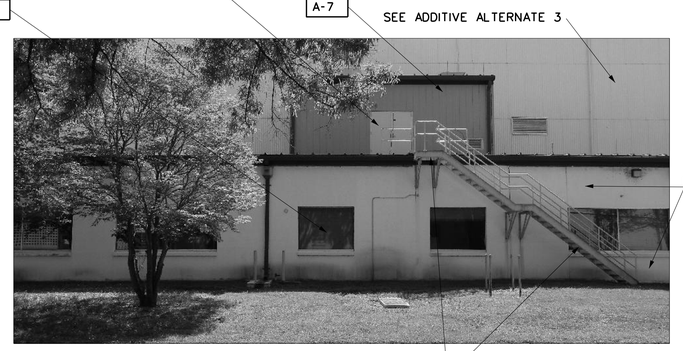

P4 A4.1 VIEW FROM NORTH
NOT TO SCALE

GENERAL NOTES
(ADDITIVE ALTERNATE 4)

A. CONTRACTOR SHALL MAINTAIN SCHEDULE. COORDINATE PROJECT WITH COTR FOR PROPER ORDER OF INSTALLATION AND ENSURE ALL EQUIPMENT AND FINISHES ARE PROTECTED AT ALL TIMES.

B. VERIFY ALL DIMENSIONS AND CONDITIONS AT THE SITE PRIOR TO BIDDING AND CONSTRUCTION.

C. REPAIR OR REPLACE ALL WORK DAMAGED DUE TO DEMOLITION OR CONSTRUCTION TO PRODUCE A COMPLETELY FINISHED JOB.

D. ALL MATERIAL IS SPECIFIED ON AN "APPROVED EQUAL" BASIS UNLESS OTHERWISE NOTED. APPROVAL WILL BE BY THE COTR.

E. ALL MATERIAL SPECIFIED SHALL BE INSTALLED IN ACCORDANCE WITH THE MANUFACTURER'S WRITTEN INSTRUCTIONS UNLESS OTHERWISE SHOWN.

F. ALL DETAILS AND SECTIONS SHOWN ON THE DRAWINGS ARE TYPICAL AND SHALL APPLY TO SIMILAR SITUATIONS THROUGHOUT THE ENTIRE PROJECT.

G. THE BUILDING WILL BE OCCUPIED DURING THIS WORK. THE CONTRACTOR, AND ALL WORKERS, SHALL COORDINATE THEIR WORK TO MINIMIZE IMPACT TO THOSE USING THE BUILDING AND NORMAL FUNCTIONS OF THE BUILDING.

H. MAINTAIN EGRESS PATHS FROM ALL EXISTS TO GRADE LEVEL. AT ALL STAGES OF DEMOLITION AND CONSTRUCTION. MINIMUM EGRESS WIDTHS SHALL BE AS WIDE AS THE EXIT DOORS THEY SERVE.

ARCHITECTURAL NOTES
(ADDITIVE ALTERNATE 4)

A-1 CLEAN AND PREPARE CMU AND CONCRETE SURFACES. PAINT. COLOR TO MATCH EXISTING.

A-2 CLEAN, PREPARE AND PAINT CMU AND CONCRETE WALLS OF AREAWAY. COLOR TO MATCH EXISTING.

A-3 EXISTING DOORS AND WINDOWS TO REMAIN. PAINT PREVIOUSLY PAINTED SURFACES AND UNPAINTED SURFACES. DO NOT PAINT PREFINISHED SURFACES (TYPICAL). PAINT ALL STEEL AND MASONRY LINTELS, JAMBS AND SILLS FOR ALL DOORS AND WINDOWS IN THE WORK AREA.

A-4 REMOVE EXISTING BUILDING SIGNAGE AND STORE IN A SAFE PLACE. AFTER PAINTING IS COMPLETED REINSTALL SIGNS TO ORIGINAL LOCATIONS. RE-USE UN-DAMAGED MOUNTING HARDWARE AS PRACTICABLE. PROVIDE NEW HARDWARE TO REPLACE DAMAGED AND CORRODED HARDWARE. FIELD VERIFY SIGN LOCATIONS.

A-5 EXISTING CANOPY TO REMAIN UNLESS OTHERWISE NOTED.

A-6 CLEAN AND PREPARE STEEL STAIRWAYS, LANDINGS, HANDRAILS AND SUPPORTS. PAINT. COLOR TO MATCH EXISTING.

A-7 NO WORK. EXISTING METAL SIDING TO REMAIN.

A-8 PAINT EXISTING LOUVER AND FRAME. MATCH EXISTING COLOR SCHEME.

A-9 NO WORK ON EXISTING DOOR.

A-10 REMOVE EXISTING METAL ABANDONED-IN-PLACE METAL AWNING. PATCH HOLES IN MASONRY AND PREPARE AREA FOR PAINT.

A-11 PAINT EXISTING PIPING SUPPORTS ON THE SOUTH WALL OF THE WEST WING. NOTE THAT SOME OF THESE SUPPORTS HAVE BEEN PAINTED BY OTHERS. THE CONTRACTOR SHALL PAINT SUPPORTS SHOWING RUST, CRACKED OR PEELING PAINT.

A-12 PAINT EXISTING CANOPY.

A-13 PAINT ALL PERSONNEL DOORS AND FRAMES (INTERIOR AND EXTERIOR) IN THE WORK AREA UNLESS OTHERWISE NOTED.

P5 A4.1 VIEW FROM WEST
NOT TO SCALE

P6 A4.1 VIEW FROM SOUTH
NOT TO SCALE

WORK DESCRIBED ON THIS SHEET APPLIES TO ADDITIVE ALTERNATE 4

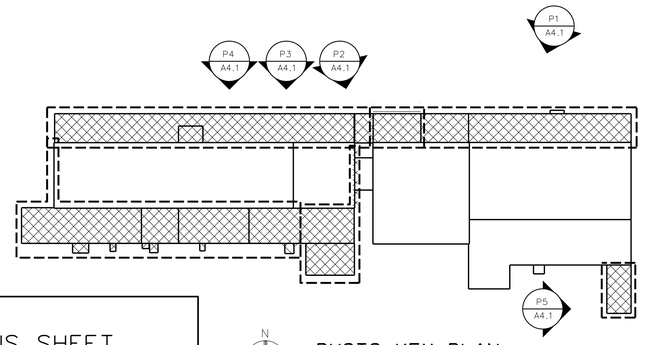

PHOTO KEY PLAN
NOT TO SCALE

LEAD WARNING

COATINGS ON EXISTING STRUCTURAL STEEL AND STEEL WINDOWS CONTAIN LEAD. WORK SHALL COMPLY WITH CONTRACT DOCUMENTS AND ALL GOVERNING ENVIRONMENTAL AND HEALTH REGULATIONS.

ASBESTOS WARNING

EXTERIOR WALL PANELS CONTAIN ASBESTOS. ASBESTOS CONTENT OF THE WALL PANELS IS NOT CONSIDERED FRIABLE. INSULATION AND MASTIC ON PIPING AND DUCTWORK CONTAIN ASBESTOS. ASBESTOS WORK SHALL COMPLY WITH SPECIFICATIONS, SECTION 02080 AND SHALL MEET ALL OSHA AND EPA REQUIREMENTS.

WARNING
DO NOT SCALE THIS DRAWING
THIS DRAWING WAS DESIGNED TO BE PRINTED AT A NASA SHEET SIZE: MSFC STD. SIZE 40" X 28"

PRELIMINARY CADD DWG.
CHANGES TO THIS DRAWING SHALL BE MADE ON CADD ONLY.
3143268 04-12-12 SGF
LATEST CADD UPDATE: 10-25-13 09:45 AM BY: ROB

REV.	BY	DATE	REVISION	C.I. NO.	APPROVED

Marshall Space Flight Center
Huntsville, Alabama 35812

WORK REQUEST NO. 3143268

BUILDING 4619
REPLACE ASBESTOS SIDING
(BUILDINGS 4755/4619)
ARCHITECTURAL: PHOTOGRAPHS, NOTES

AE FIRM: KAYA Associates, Inc.
NASA AE CONTRACT NO. NASS- NNM11AA39C

SUBMITTED: DAVID A. SELLERS
APPROVAL RECOMMENDED:
APPROVED:
AE: DATE:
AD22 PROJECT A/E
APPROVAL RECOMMENDED:
AD22 GROUP LEAD DATE:
DESIGNED BARTON
DRAWN BARTON
CHECKED DANIELL
AD22 SUPPORT A/E
APPROVAL RECOMMENDED:
KAYA Associates, Inc.
SCALE: AS NOTED
SPEC. NO. FAC M5052

SIGNATURES ON INDEX SHEET INDICATE ACCEPTANCE OF THIS SHEET

REF. NO. A4.1 OF 3

DRAWING NO. FAC-GJ-4619-A4.1

MSFC-FORM 232 REV. 8-21-99-MCL

MSFC MASTER BID DISK 11-18-2013

Projects*4619*gj-3143268 - Replace Asbestos Siding*A4-1.dgn

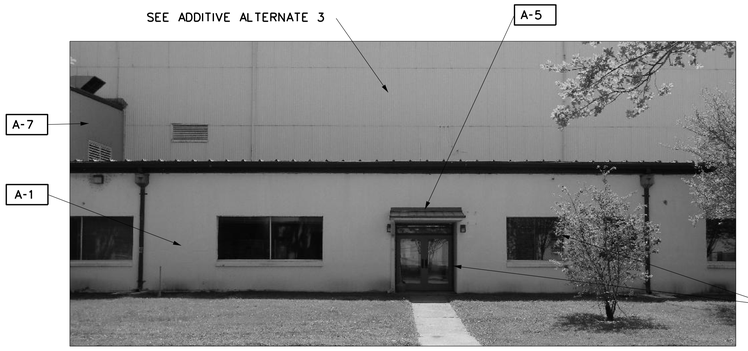

P1 A4.2 VIEW FROM NORTH
NOT TO SCALE

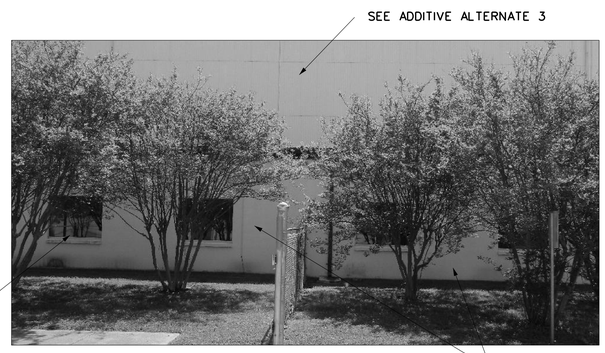

P2 A4.2 VIEW FROM NORTH
NOT TO SCALE

P3 A4.2 VIEW FROM NORTH
NOT TO SCALE

P4 A4.2 VIEW FROM WEST
NOT TO SCALE

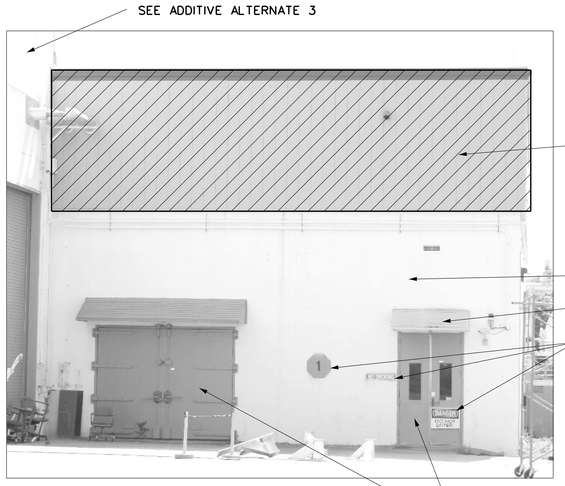

P5 A4.2 VIEW FROM WEST
NOT TO SCALE

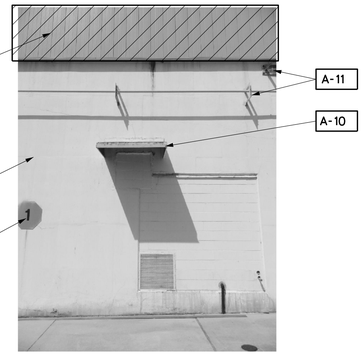

P8 A4.2 VIEW FROM SOUTH
NOT TO SCALE

WORK DESCRIBED ON THIS SHEET
APPLIES TO ADDITIVE ALTERNATE 4

P6 A4.2 VIEW FROM EAST
NOT TO SCALE

P7 A4.2 VIEW FROM EAST
NOT TO SCALE

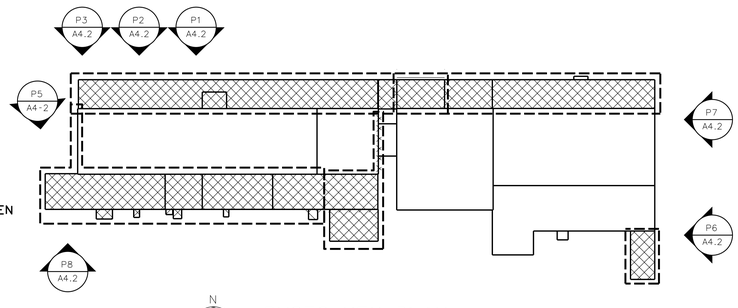

N
PHOTO KEY PLAN
NOT TO SCALE

WARNING
DO NOT SCALE THIS DRAWING
THIS DRAWING WAS DESIGNED TO BE PRINTED AT A NASA SHEET SIZE: MSFC STD. SIZE 40" X 28"

PRELIMINARY CADD DWG.
CHANGES TO THIS DRAWING SHALL BE MADE ON CADD ONLY.
3143268 04-12-12 SGF
LATEST CADD UPDATE: 10-25-13 09:50 AM
BY: ROB

REV.	BY	DATE	REVISION	C.I. NO.	APPROVED

Marshall Space Flight Center
Huntsville, Alabama 35812

WORK REQUEST NO. 3143268

BUILDING 4619
REPLACE ASBESTOS SIDING
(BUILDINGS 4755/4619)
ARCHITECTURAL: PHOTOGRAPHS, NOTES

AE FIRM: KAYA Associates, Inc.
NASA AE CONTRACT NO. NAS8- NNM11AA39C

SUBMITTED: DAVID A. SELLERS		APPROVAL RECOMMENDED: AD22 PROJECT A/E	APPROVED:
AE:	DATE:	APPROVAL RECOMMENDED: AD22 SUPPORT A/E	AB22 GROUP LEAD / DATE:
DESIGNED BARTON / DRAWN BARTON / CHECKED DANIELL		APPROVAL RECOMMENDED: KAYA Associates, Inc.	DRAWING NO. FAC-GJ-4619-A4.2
SCALE: AS NOTED		SPEC. NO. FAC M5052	

SIGNATURES ON INDEX SHEET INDICATE ACCEPTANCE OF THIS SHEET

REF. NO. A4.2 OF 3

MSFC-FORM 232 REV. 8-21-89-RCL

MSFC MASTER BID DISK 11-18-2013

Projects*4619*gj-3143268 - Replace Asbestos Siding*A4-2.dgn

P1 A4.3 VIEW FROM SOUTH
NOT TO SCALE

P2 A4.3 VIEW FROM SOUTH
NOT TO SCALE

WORK DESCRIBED ON THIS SHEET APPLIES TO ADDITIVE ALTERNATE 4

LEGEND

NO WORK - EXISTING SIDING TO REMAIN

P3 A4.3 VIEW FROM SOUTH
NOT TO SCALE

P4 A4.3 VIEW FROM SOUTH
NOT TO SCALE

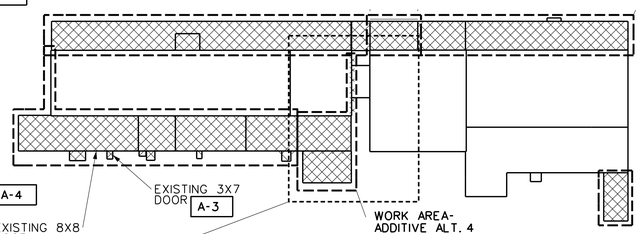

PHOTO KEY PLAN
NOT TO SCALE

P5 A4.3 VIEW FROM SOUTHEAST
NOT TO SCALE

P6 A4.3 VIEW FROM SOUTH
NOT TO SCALE

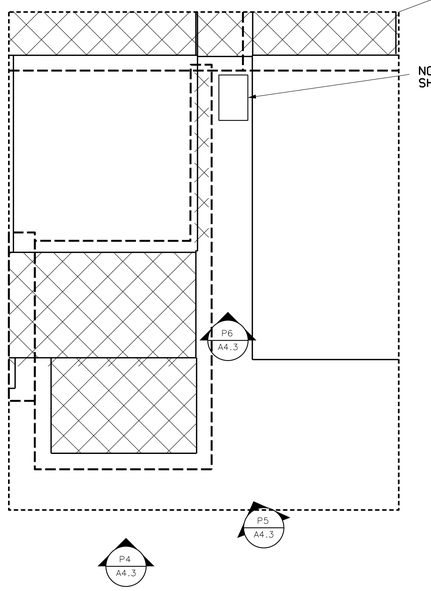

WARNING
DO NOT SCALE THIS DRAWING
THIS DRAWING WAS DESIGNED TO BE PRINTED AT A NASA SHEET SIZE: MSFC STD. SIZE 40" X 28"

PRELIMINARY CADD DWG.
CHANGES TO THIS DRAWING SHALL BE MADE ON CADD ONLY.
3143268
04-11-12
SGF
LATEST CADD UPDATE: 10-25-13 10:05 AM
BY: ROB

REV.	BY	DATE	REVISION	C.N. NO.	APPROVED

Marshall Space Flight Center
Huntsville, Alabama 35812

WORK REQUEST NO. 3143268

BUILDING 4619
REPLACE ASBESTOS SIDING
(BUILDINGS 4755/4619)
ARCHITECTURAL: PHOTOGRAPHS, NOTES

AE FIRM: KAYA Associates, Inc.
NASA AE CONTRACT NO. NAS8- NNM11AA39C

SUBMITTED: DAVID A. SELLERS
APPROVAL RECOMMENDED: AD22 PROJECT A/E
APPROVED:
AE: DATE:
APPROVAL RECOMMENDED: AD22 SUPPORT A/E
AB22 GROUP LEAD DATE:
DESIGNED BARTON
DRAWN BARTON
CHECKED DANIELL
APPROVAL RECOMMENDED: KAYA Associates, Inc.
DRAWING NO. FAC-GJ-4619-A4.3
SCALE: AS NOTED
SPEC. NO. FAC M5052

SIGNATURES ON INDEX SHEET INDICATE ACCEPTANCE OF THIS SHEET

REF. NO. A4.3 OF 3

MSFC-FORM 232 REV. 8-21-89-RCL

MSFC MASTER BID DISK 11-18-2013

Projects*4619*gj-3143268 - Replace Asbestos Siding*A4-3.dgn

CORPS OF ENGINEERS

U. S. ARMY

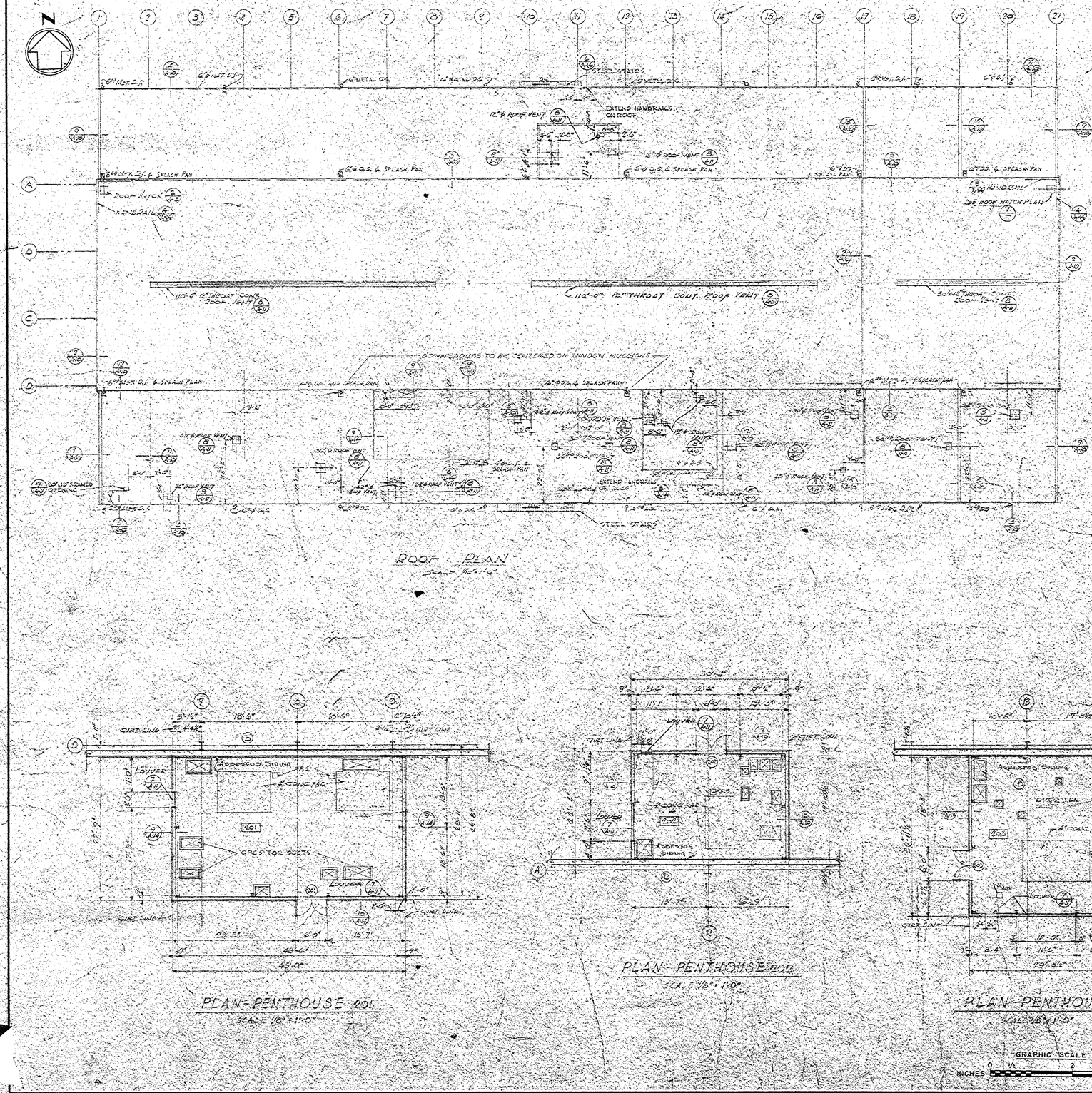

ROOF PLAN

SCALE: 1/8" = 1'-0"

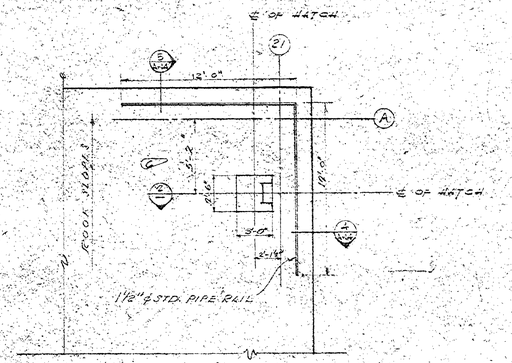

ROOF HATCH PLAN (1/1)

SCALE: 1/4" = 1'-0"

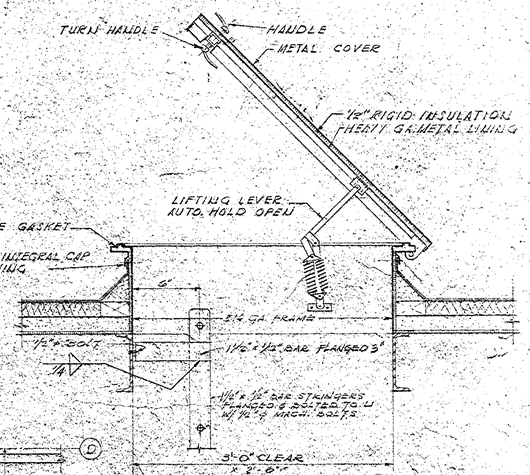

ROOF HATCH SECTION (2/1)

N.T.S.

NOTE A

REVISED SIZES OF DOWNSPOUTS, ADDED NEW METAL DOWNSPOUTS AND SPLASH PANS.

PLAN - PENTHOUSE 201

SCALE 1/8" = 1'-0"

PLAN - PENTHOUSE 202

SCALE 1/8" = 1'-0"

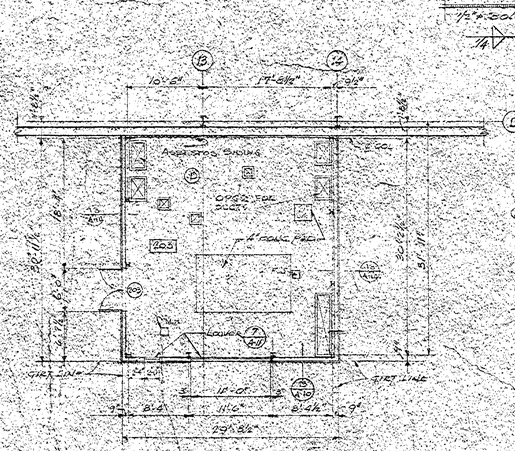

PLAN - PENTHOUSE 205

SCALE 1/8" = 1'-0"

GRAPHIC SCALE

INCHES 0 1/2 1 2 3

REVISION	DATE	DESCRIPTION	BY	BY	BY
C	5 Mar 58	REVISED DIMENSION - DETAIL 1	EN		
B	11 Feb 58	ADDED ASBESTOS SIDING TO EQUIP. ROOMS	LMA	LMA	ALA
A	19 Oct 56	ADDED NOTE "A"			

THE RALPH M. PARSONS COMPANY
ARCHITECTS - ENGINEERS
617 SOUTH OLIVE STREET
LOS ANGELES, CALIFORNIA

CORPS OF ENGINEERS
U.S. ARMY
OFFICE OF THE DISTRICT ENGINEER
MOBILE, ALABAMA

DRAWN BY: [illegible]
TRACED BY:
CHECKED BY:
SUBMITTED BY:
APPROVED:
APPROVED FOR THE G.E.:

U.S. ARMY ORDNANCE CORPS - REDSTONE ARSENAL - HUNTSVILLE, ALA.
ARMY BALLISTIC MISSILE AGENCY

STRUCTURES AND MECHANICS BUILDING
LINE ITEM NO. A-803-803.120

ARCHITECTURAL
STRUCTURES AND MECHANICS UNIT
ROOF AND EQUIPMENT ROOMS PLANS

DATE: OCTOBER 1956

SCALE: AS NOTED
FILE NO.: PE 4619
DRAWING NO. 60-09-03
SHEET 4 OF 78

A 3

RED-6716

MSFC MASTER BID DISK 11-18-2013

CORPS OF ENGINEERS

U. S. ARMY

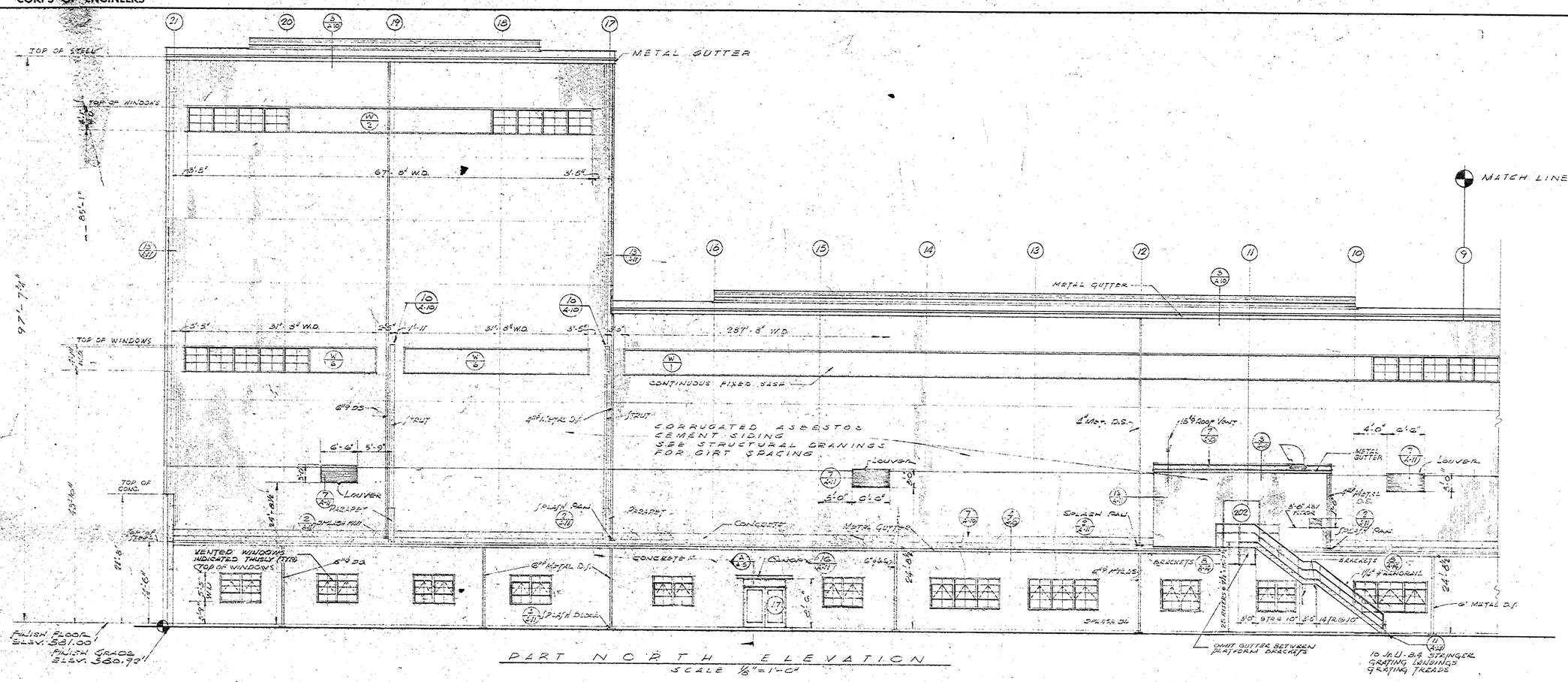

PART NORTH ELEVATION

SCALE 1/8"=1'-0"

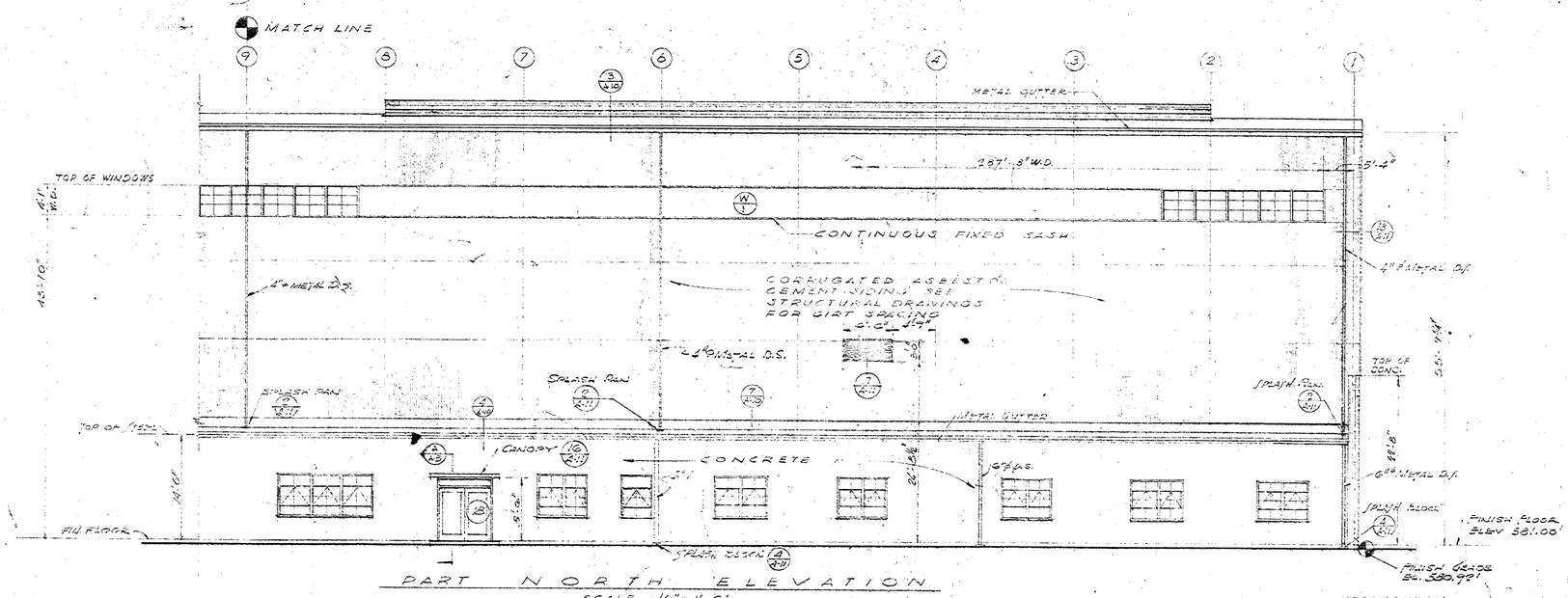

PART NORTH ELEVATION

SCALE 1/8"=1'-0"

NOTE "A"

REVISED WINDOW SIZES AND TYPE IN A.I.A. CONDITIONED AREAS

GRAPHIC SCALE

INCHES 0 ½ 1 2 3

REVISION	DATE	DESCRIPTION	BY	BY	BY
	MAR. 60	REV. [illegible]			
A	10-1-56	ADDED NOTE "A"	GDA	[illegible]	[illegible]

THE RALPH M. PARSONS COMPANY
ARCHITECTS - ENGINEERS
617 SOUTH OLIVE STREET
LOS ANGELES, CALIFORNIA

CORPS OF ENGINEERS
U.S. ARMY
OFFICE OF THE DISTRICT ENGINEER
MOBILE, ALABAMA

DRAWN BY: G.D. ALLEN

TRACED BY:

CHECKED BY: C.J.M.

SUBMITTED BY: Leo D. McCarroll

APPROVED: [illegible]
CHIEF, DESIGN BRANCH

APPROVED: [illegible]
CHIEF, ENGINEERING DIVISION

APPROVED FOR THE D.E.: [illegible]
LT. COL., CORPS OF ENGINEERS, ASST. DISTRICT ENGINEER
DATE: OCTOBER 1956

U.S. ARMY ORDNANCE CORPS — REDSTONE ARSENAL — HUNTSVILLE, ALA.
ARMY BALLISTIC MISSILE AGENCY

STRUCTURES AND MECHANICS BUILDING

LINE ITEM NO. A-805-803.120

ARCHITECTURAL

STRUCTURES AND MECHANICS UNIT

NORTH ELEVATION

DATE: OCTOBER 1956

A 4

SCALE: AS NOTED

SPEC. NO. PE 4619

FILE NO. RED-6717

DRAWING NO. 60-09-03

SHEET 5 OF 20

MSFC MASTER BID DISK 11-18-2013

CORPS OF ENGINEERS U. S. ARMY

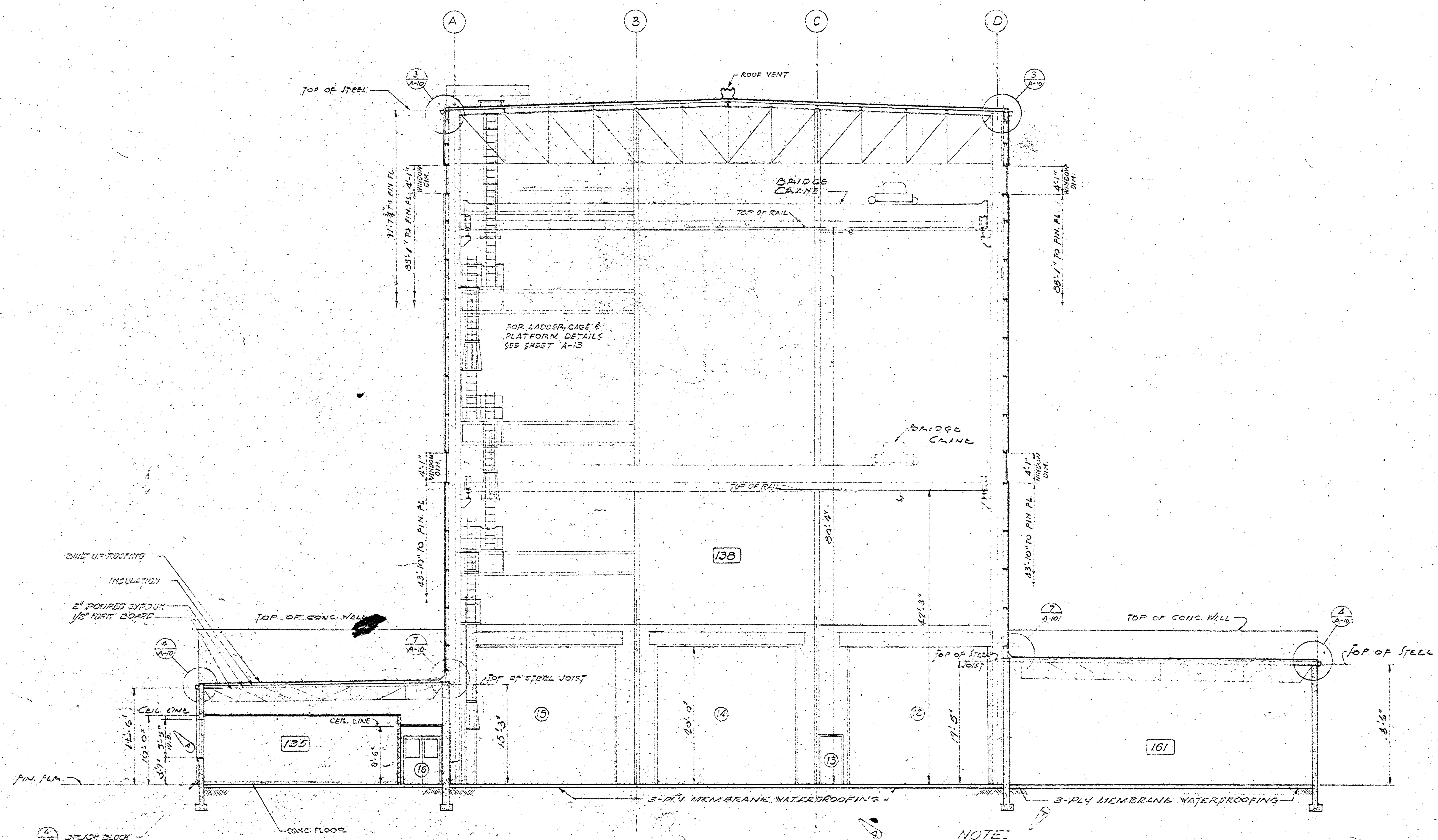

NOTE:
FILL COMPACTED TO 95% OF MAXIMUM DENSITY OBTAINED AT THE OPTIMUM MOISTURE CONTENT AS DETERMINED BY THE MODIFIED AASHO T 99-49.

SECTION (A)
SCALE 1/8" = 1'-0"

GRAPHIC SCALE
INCHES 0 1/2 1 2 3

REVISION	DATE	DESCRIPTION	BY	BY	BY
	MAR. '60	REV. AS BUILT. CONTRACT DA-01-076-ENG-3650, RESIDENT ENGINEER			
A	19 Oct. '56	ADDED MEMBRANE WATERPROOFING UNDER SLAB ADDED COMPACTED FILL NOTE, REVISED WINDOW DIMENSION			

THE RALPH M. PARSONS COMPANY
ARCHITECTS - ENGINEERS
617 SOUTH OLIVE STREET
LOS ANGELES, CALIFORNIA

CORPS OF ENGINEERS
U. S. ARMY
OFFICE OF THE DISTRICT ENGINEER
MOBILE, ALABAMA

DRAWN BY: F. Cook
TRACED BY:
CHECKED BY: M. Nicholas CFM
SUBMITTED BY: Leo D. McCarrell

U. S. ARMY ORDNANCE CORPS — REDSTONE ARSENAL — HUNTSVILLE, ALA.
ARMY BALLISTIC MISSILE AGENCY

STRUCTURES AND MECHANICS BUILDING
LINE ITEM NO A-803-803.120
ARCHITECTURAL
STRUCTURES AND MECHANICS UNIT
BUILDING SECTION

APPROVED: CHIEF, DESIGN BRANCH
APPROVED: CHIEF, ENGINEERING DIVISION
DATE: OCTOBER 1956

APPROVED FOR THE D.E.
LT. COL., CORPS OF ENGINEER, ASST. DISTRICT ENGINEER
DATE: OCTOBER 1956

SCALE: 1/8" = 1'-0"
FILE NO. RED-6720
PE-4619
DRAWING NO. 60-09-03
SHEET 8 OF 10

A 7

MSFC MASTER BID DISK 11-18-2013

CORPS OF ENGINEERS

U. S. ARMY

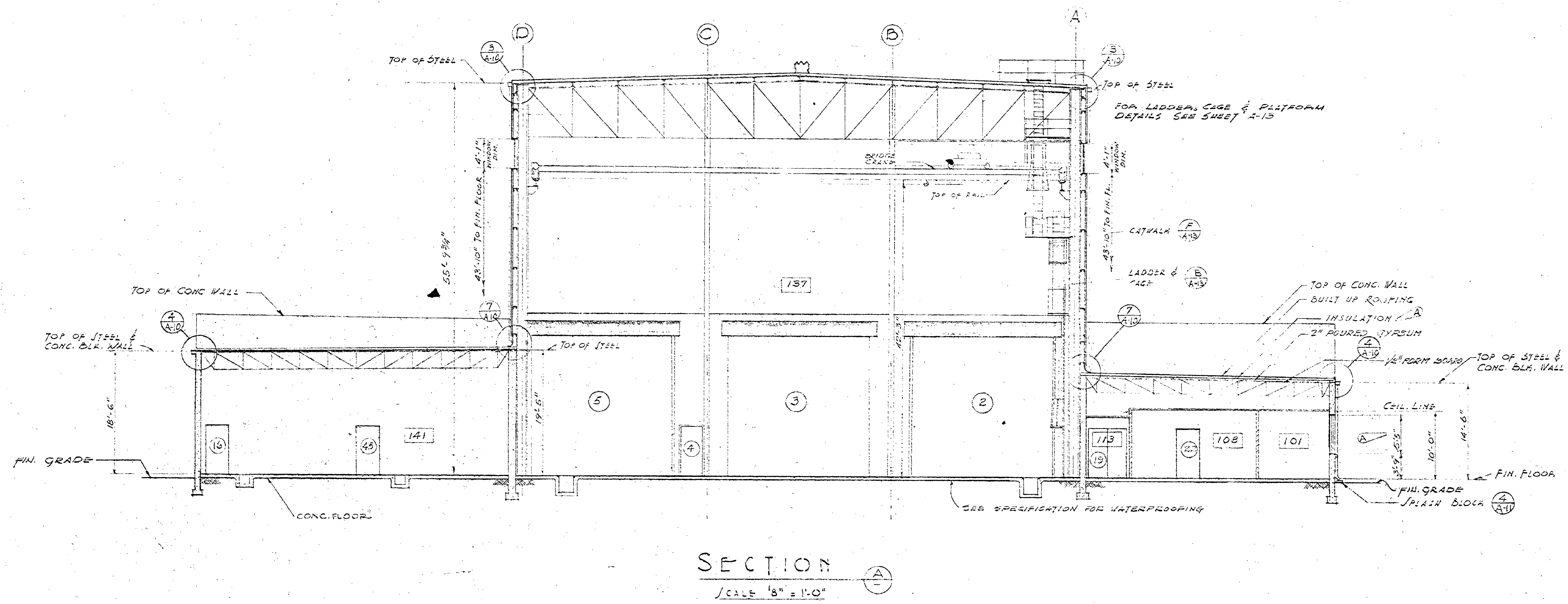

REVISION	DATE	DESCRIPTION	BY	BY	BY
	MAR. '60	REV. ... 3650			
A	19 Oct. '56	DELETED THICKNESS DIMENSION OF ROOF INSULATION REVISED WINDOW DIMENSION SHOWN AT SECTION			

THE RALPH M. PARSONS COMPANY
ARCHITECTS - ENGINEERS
617 SOUTH OLIVE STREET
LOS ANGELES, CALIFORNIA

CORPS OF ENGINEERS
U. S. ARMY
OFFICE OF THE DISTRICT ENGINEER
MOBILE, ALABAMA

DRAWN BY: F. Cook
TRACED BY:
CHECKED BY: M. [illegible] CPM
SUBMITTED BY: [illegible] McCarrell

U. S. ARMY ORDNANCE CORPS – REDSTONE ARSENAL – HUNTSVILLE, ALA.
ARMY BALLISTIC MISSILE AGENCY

STRUCTURES AND MECHANICS BUILDING
LINE ITEM NO. A-803-803.120
ARCHITECTURAL
STRUCTURES AND MECHANICS UNIT
BUILDING SECTION

APPROVED: CHIEF, DESIGN BRANCH
APPROVED: CHIEF, ENGINEERING DIVISION
DATE: OCTOBER 1956

APPROVED: FOR THE D.E.
LT.COL., CORPS OF ENGINEER, ASS'T DISTRICT ENGINEER
DATE: OCTOBER 1956

SCALE: 1/8" = 1'-0"
PE-4619
FILE NO. RED-6721
DRAWING NO. 60-09-03
SHEET 9 OF 10

A8

GRAPHIC SCALE
INCHES 0 1/2 1 2 3

MSFC MASTER BID DISK 11-18-2013

CORPS OF ENGINEERS

U. S. ARMY

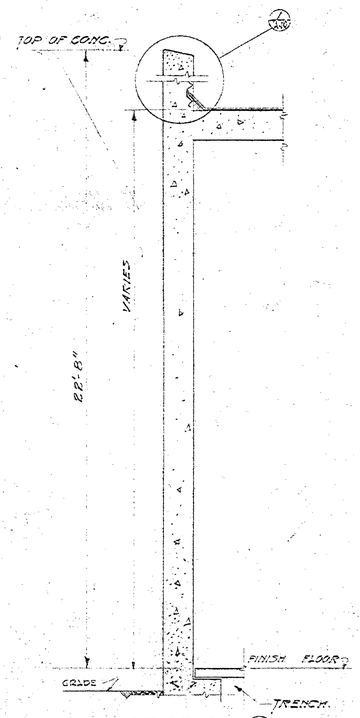

SECTION (A/-)

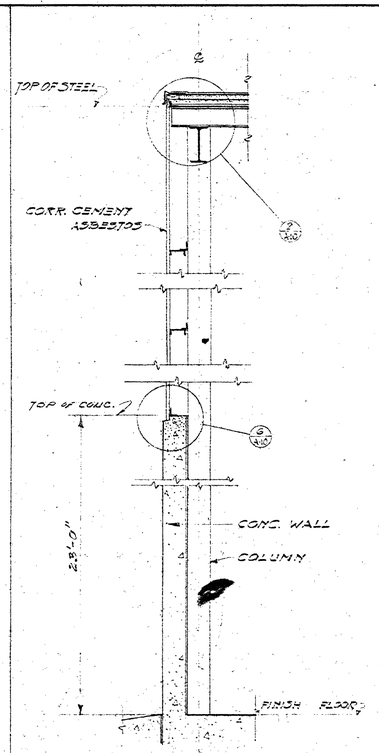

SECTION (B/-)

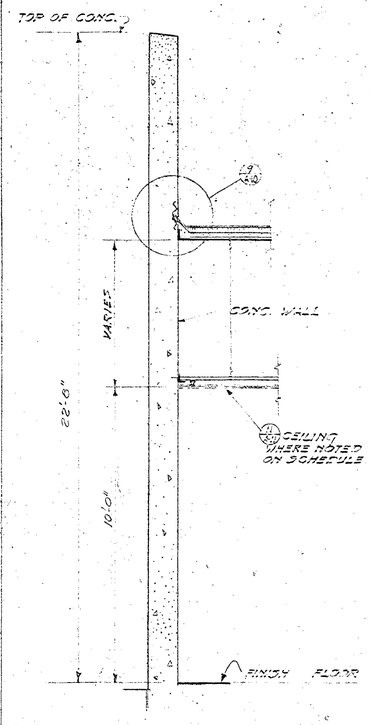

SECTION (C/-)

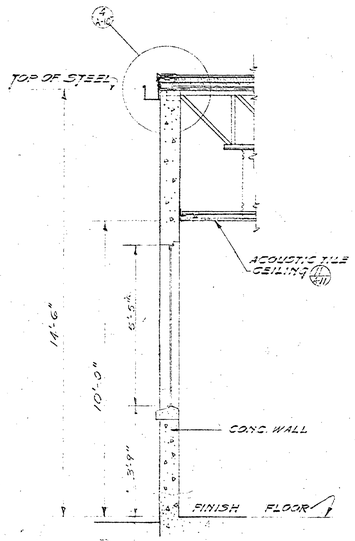

SECTION (D/-)

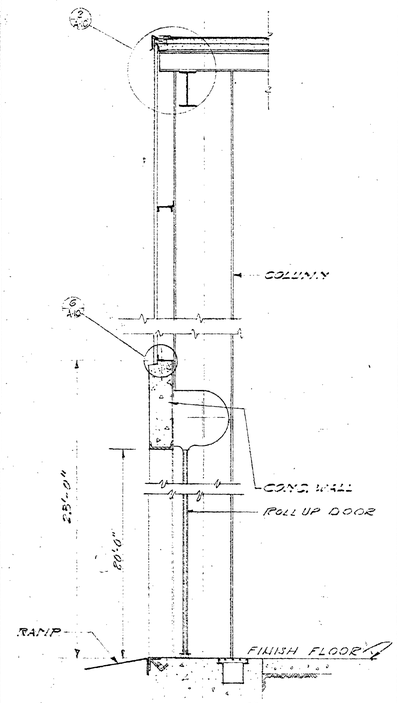

SECTION (E/-)

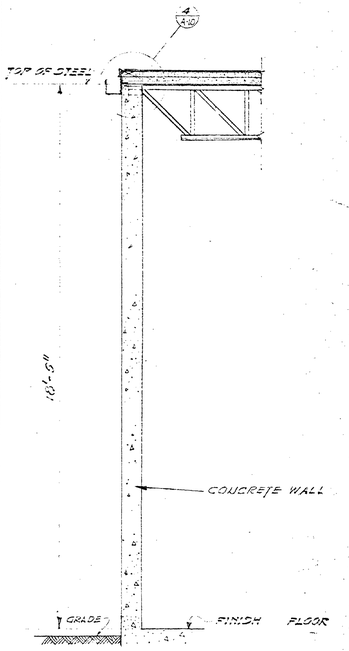

SECTION (F/-)

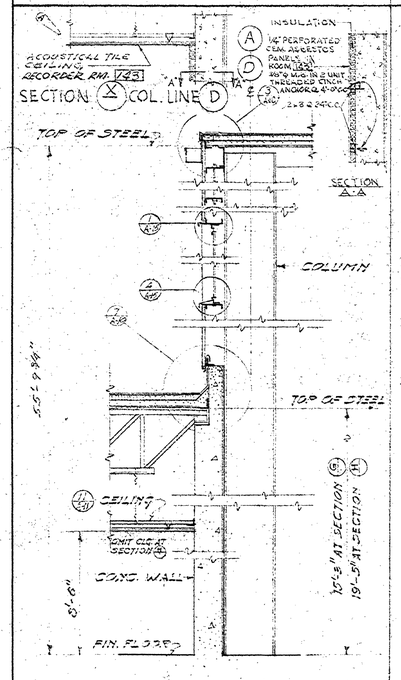

SECTION (G/-) COL. LINE (A)
SECTION (H/-) COL. LINE (D)

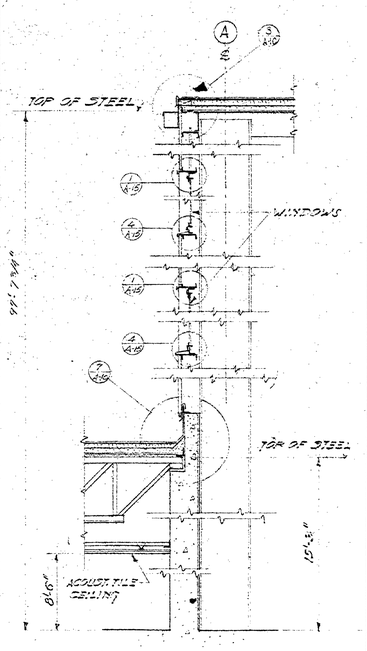

SECTION (J/-)

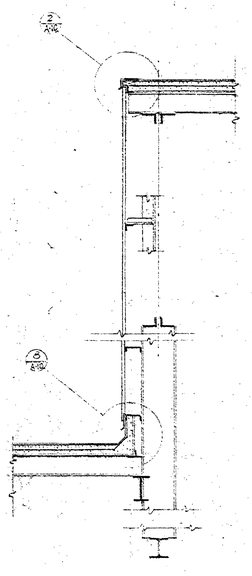

SECTION (K/-)

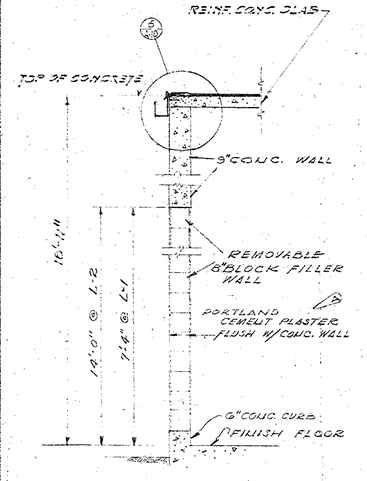

SECTION (L-1/-) NOTED
SECTION (L-2/-) NOTED

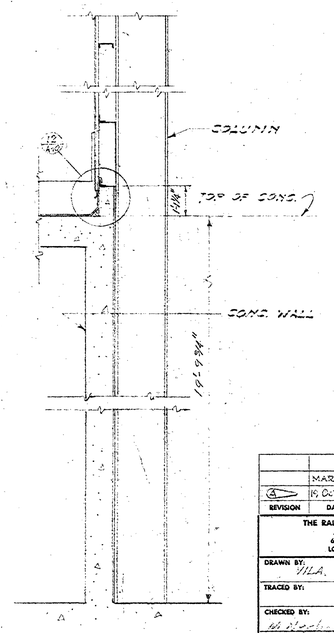

SECTION (M/-)

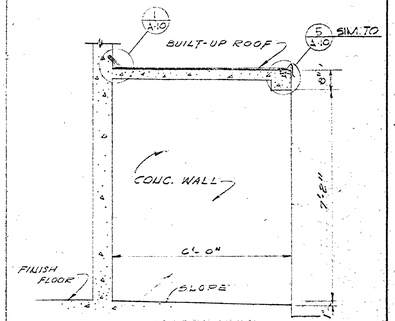

SECTION (N/-)

GRAPHIC SCALE

INCHES 0 1/2 1 2 3

REVISION	DATE	DESCRIPTION	BY	BY	BY
3	MAR. '60	REV. ... TO CONTRACT DA-01-ORD-ENG-2567 (RESIDENT ...			
2	19 OCT 56	REVISED SECTION L-1,L-2 ADDED SECTION (N)			

THE RALPH M. PARSONS COMPANY
ARCHITECTS - ENGINEERS
617 SOUTH OLIVE STREET
LOS ANGELES, CALIFORNIA

CORPS OF ENGINEERS
U.S. ARMY
OFFICE OF THE DISTRICT ENGINEER
MOBILE, ALABAMA

DRAWN BY: V.L.A.
TRACED BY:
CHECKED BY: C.S.M. W. Nash Lee
SUBMITTED BY: Leo B. McCarroll
APPROVED: Preston — CHIEF, DESIGN BRANCH
APPROVED: W. Wilson — CHIEF, ENGINEERING DIVISION — DATE: OCTOBER 1956
APPROVED: FOR THE D.E. Leonard T. Gerald — LT. COL., CORPS OF ENGINEERS, ASST. DISTRICT ENGINEER
DATE: OCTOBER 1956

U. S. ARMY ORDNANCE CORPS — REDSTONE ARSENAL — HUNTSVILLE, ALA.
ARMY BALLISTIC MISSILE AGENCY

STRUCTURES AND MECHANICS BUILDING

LINE ITEM NO A-603-603.120

ARCHITECTURAL

STRUCTURES AND MECHANICS UNIT
WALL SECTIONS

SCALE: 1/2"=1'-0"
FILE NO. RED-6722
PE: 4619
DRAWING NO. 60-09-03
SHEET 10 OF 30

A 9

MSFC MASTER BID DISK 11-18-2013

CORPS OF ENGINEERS

U. S. ARMY

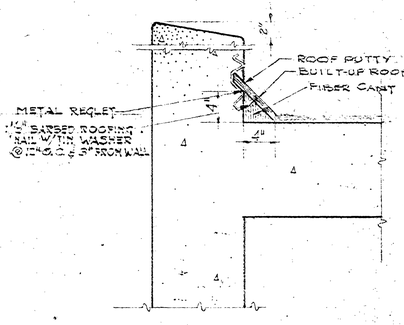

DETAIL 1

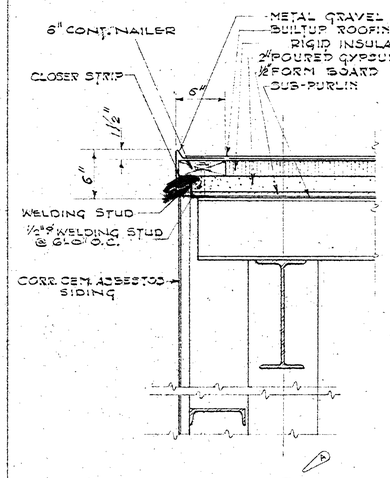

DETAIL 2

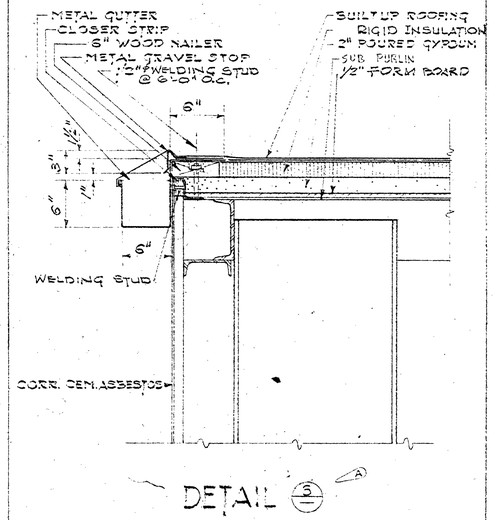

DETAIL 3

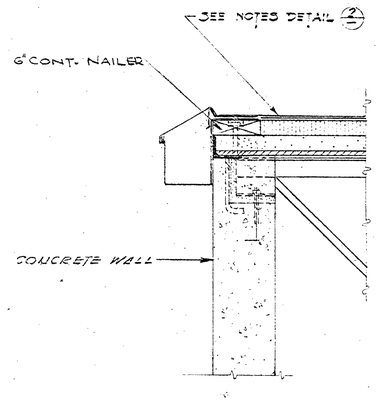

DETAIL 4

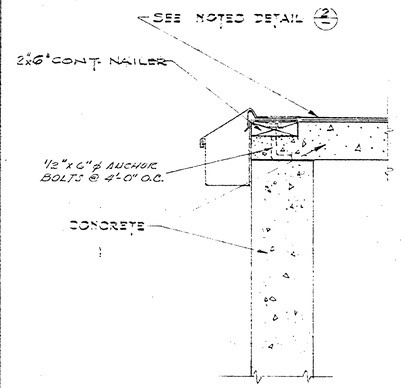

DETAIL 5

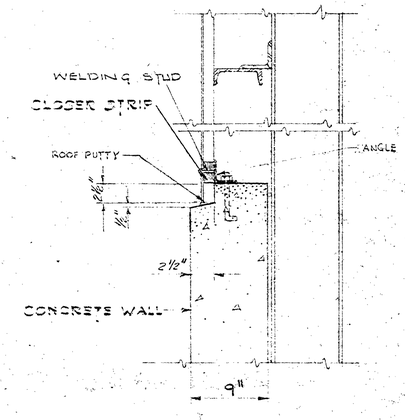

DETAIL 6

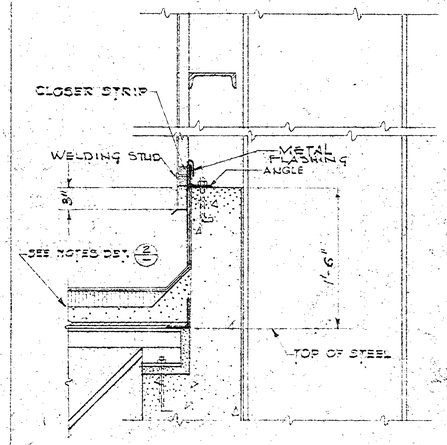

DETAIL 7

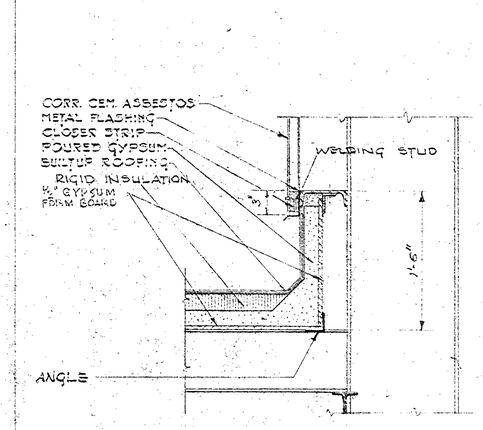

DETAIL 8

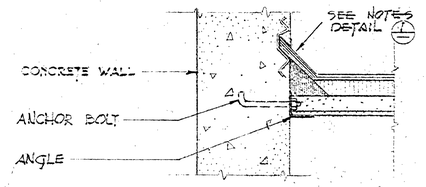

DETAIL 9

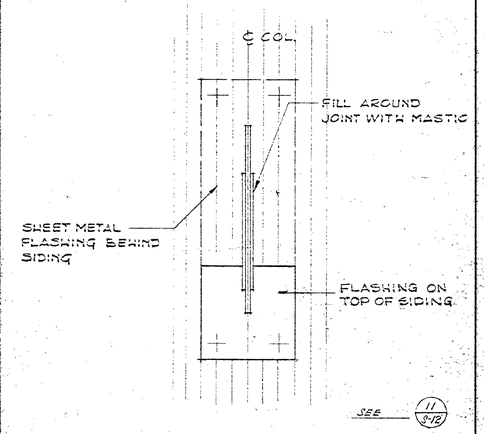

FLASHING AT STRUCTURAL STRIP

DETAIL 10

SCALE 1 1/2" = 1'-0"

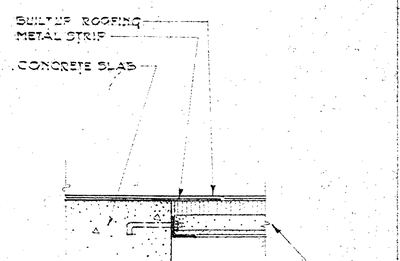

DETAIL 11

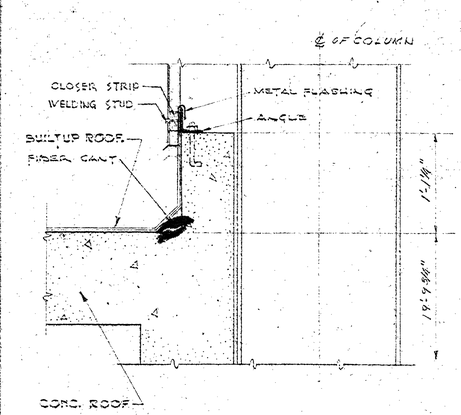

DETAIL 12

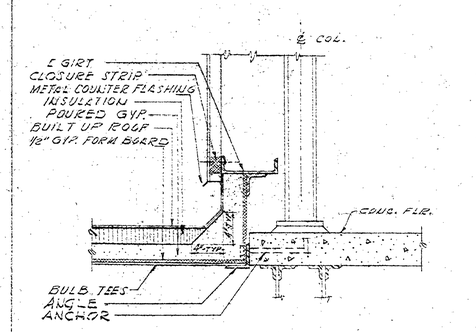

DETAIL 13

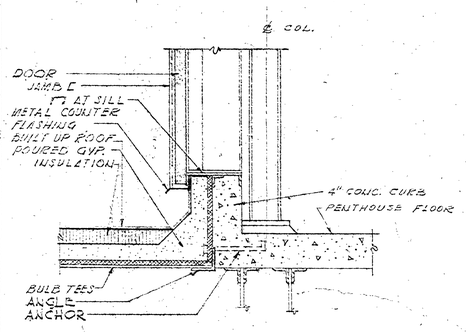

DETAIL 14

GRAPHIC SCALE

INCHES 0 ½ 1 2 3

REVISION	DATE	DESCRIPTION	BY	BY	BY
4	10 OCT. 56	DELETED THICKNESS OF WOOD NAILERS & ROOF DECK INSULATION			
	MAR. 1960	REVISED TO END 2650			

THE RALPH M. PARSONS COMPANY
ARCHITECTS - ENGINEERS
617 SOUTH OLIVE STREET
LOS ANGELES, CALIFORNIA

CORPS OF ENGINEERS
U.S. ARMY
OFFICE OF THE DISTRICT ENGINEER
MOBILE, ALABAMA

DRAWN BY: J. Villalobos
TRACED BY:
CHECKED BY:
SUBMITTED BY: Lee B. McCarroll
APPROVED:
CHIEF, DESIGN BRANCH

U. S. ARMY ORDNANCE CORPS – REDSTONE ARSENAL – HUNTSVILLE, ALA.
ARMY BALLISTIC MISSILE AGENCY

STRUCTURES AND MECHANICS BUILDING
LINE ITEM NO. A-803-803.120
ARCHITECTURAL
STRUCTURES AND MECHANICS UNIT
EXTERIOR DETAILS

APPROVED: DATE: OCTOBER 1956
CHIEF, ENGINEERING DIVISION

APPROVED: FOR THE D.E.
LT. COL., CORPS OF ENGINEERS, ASST. DISTRICT ENGINEER
DATE: OCTOBER 1956

SCALE: 1½" = 1'-0" PE: 4619
FILE NO. RED-6723
DRAWING NO. 60-09-03
SHEET 11 OF 20

A 10

MSFC MASTER BID DISK 11-18-2013

ELECTRICAL SYMBOLS

PLAN SYMBOLS - LIGHTING & POWER

- Fluorescent Fixture With Outlet, Recessed In Ceiling Or Surface Mounted As Per Indicated Type. Numeral Indicates Circuit, Lower Case Letter Indicates Controlling Switch.
- Ceiling Mounted Incandescent Light Outlet
- Wall Mounted Incandescent Light Outlet
- Code Size Junction Box, Ceiling Or Wall Mounted As Shown
- Exit Light, Wall Mounted, Or Ceiling Mounted
- Flush Ceiling Type Lighting Fixture & Outlet
- Room Thermostat Mounted 5'-0" Above Floor
- Clock Outlet Equal To Hubble Nº 7707
- Street Lighting Luminaire
- Floodlight. Mounting Height As Noted Or Detailed
- Two Mercury-Vapor & One Incandescent Light Cluster.
- S_a Local Switch-Single Pole-20A.-125V.-T-Rated Equal To Hubbell Nº 9085 Or 120-277 Volt A.C. Equal To Hubbell Nº 1221 For 227 Volt Fluorescent Light Circuits. Lower Case Letter Indicates Fixtures Controlled. Mount 48" Above Floor, Unless Otherwise Noted.
- S_a^2 Local Switch Same As S_a Except Double Pole.
- S^P Local Switch, Same As Above, Except With Pilot Light (G-E Lamp) Device Equal To Hubble Nº 432, And Red Jewel Equal To Hubble Nº 730.
- S^3 Local Switch, 3-Way, 20 A, 125 V. T-Rated Equal To Hubbell Nº 9938. Mount 48" Above Floor, Unless Otherwise Noted.
- Manual Starting Switch For Single Phase Fractional Horse-Power Motors. Single Pole, 125 V., With Thermal Overload Unit, Rated At 110% Of Motor Nameplate Rating. Equal To Allen-Bradley Bulletin 600.
- Pushbutton Station, Start-Stop
- Pushbutton Station, Start-Stop With Pilot Light
- Selector Switch, Hand-Off-Automatic.
- Solenoid Valve (SAV - Solenoid Air Valve) (RSV - Refrigerant Solenoid Valve)
- Non-Electrically Actuated Circuit Controlling Device. Type As Follows:
  - P.S. = Pressure Switch
  - L.S. = Limit Switch
  - H.L.P. = High-Low Refrigerant Sw.
  - F.S. = Float Switch
  - TH = Thermostat Control Switch
  - PES = Pneumatic Electric Switch
- Combination Selector Switch And Manual Starting Switch With Thermal Overload "P" Indicates Pilot Light.
- Low Voltage Transformer.
- Industrial Circuit Breaker In NEMA Type-1 Enclosure.
- Special Ground Terminal Per Detail.
- Regulated 120V Outlet Consisting Of Two 3-Wire Polarized Duplex Receptacles - H.H. Cat. #5262, Paint Box & Cover Red.
- Bare Grounding Conductor, Size As Indicated On Drawing.
- Conduit Concealed In Ceiling Or Wall
- Conduit Concealed In Floor Or Underground
- Conduit Exposed
- Cross Lines Indicate Number Of Wires In Conduit, Nº 12 AWG Wires Unless Otherwise Noted. No Cross Lines Indicates 2 #12 Unless Otherwise Noted. Conduit Size As Required By N.E.C. Unless Otherwise Noted.
- LA-1-3-5 Circuit Homerun To Panel
- Conduit Up
- Conduit Down
- Condulet Fitting, Type As Required
- C.O. Conduit Only - Size As Indicated
- Plug-In Bus Duct, Size As Indicated On Drawing
- Plug-In Circuit Breaker Unit. Size As Indicated On Drawing
- Plug-In Duct End Closure
- Cable Tap Box.
- Self-Charging Battery Type Emergency Lighting Unit, With 25 W, 6 V, Sealed Beam Lamp(s). Mounted On And/Or Remote, As Shown. Equal To Exide Lightguard Model "M"
- 30A. Non-Fused Disconnect Switch. Size As Noted
- W.P. Indicates Weatherproof Enclosure
- E.P. Indicates Enclosure Approved For Class I Group D Division I Hazardous Area.
- Grounding Plate, Burndy Type GFS Or Equal.
- Ground Rod
- 120V Single-Phase, Fractional Horsepower Motor Of Less Than 1/2 H.P. Rating.
- 480 V Three-Phase Motor, Rated At 1/2 H.P. Or More. P-1 Indicates Equipment Identification Number. See Single Line Diagram For Horsepower Ratings.
- Underfloor Duct - Single Duct
- Underfloor Duct - Double Duct
- Underfloor Duct - Triple Duct
- Underfloor Duct - Junction Box

PLAN SYMBOLS - LIGHTING & POWER

- Lighting Fixture Identification Symbol. Letter Indicates Type Of Fixture (See Fixture Schedule) Number In Lower Half Of The Hexagon Indicates Wattage Of Fixtures Required. Number Near Bottom Of Hexagon Indicates Fixture Mounting Height. Number Near Top Of Hexagon Indicates Number Of Fixtures In Area.
- Lighting Panel, 120/208 V, 4 Wire, Three Phase
- Power Panel, As Noted On Plan
- Special Equipment Panel As Noted On Plans
- Receptacle. "6" Indicates Type Of Receptacle Listed Below. "a" Is A Modification Of Type (As Determined By Design Requirements). "2" Is A Circuit Number.
  1. For 120V. 60~-1ϕ-2 Wire Systems
     - 3 Wire Grounding, Convenience, 15 Amp, 125 V Polarized. H.H. Cat. # 5262 (No Letter Designation Used)
     - Twistlock, Single, 250V.-3 Wire, Grounded. Polarized. (a) 20 Amp H.H. Cat. # 7310 G (c) 30 Amp H.H. Cat. # 7801
  2. For 208V. Or 240 V.-60~-1ϕ-2 Wire Systems
     - Arktite 600V.-2 Wire, 3 Pole, Style 2 (d) 60 Amp, C.H. Co. # AR 638 (e) 100 Amp C.H. Co. Cat # AR 1038
     - Straight Slot Single, 250V.-3 Wire Grounded, Polarized. (g) 10 Amp H.H. Cat # 7189 G (h) 20 Amp, H.H. Cat # 6810G (i) 30 Amp, H.H. Cat # 9318 G (j) 50 Amp H.H. Cat # 7374
  3. For Use With The Following Systems: 120/208 V. 60~-3ϕ-4 Wire; 120/240 V. 60~-3ϕ-4 Wire; 220 V. 60~-3ϕ-3 Wire
     - Twist-Lock, 250 V. 4 Wire With Grounding Terminal. (j) 20 Amp, H.H. Cat. # 7410
     - Hubbelock, 600V, 4 Wire With Grounding Terminal. (k) 30 Amp, H.H. Cat # 20603
     - Arktite 600V, 3 Wire, 4 Pole, Style 2 (l) 60 Amp, C.H. Co. Cat # AR 648 (m) 100 Amp. C.H. Co. Cat. # AR 1048
  4. For 440V. 60~ 3ϕ-3 Wire Systems
     - Ever-Lock, 440 V. 3 Wire, 4 Pole Polarized (n) 30 Amp R&S Cat # 8008 (o) 30 Amp R&S Cat # 8009 (p) 30 Amp R&S Cat # 8404 (q) 60 Amp R&S Cat # 8414 (r) 100 Amp R&S Cat # 8424 (s) 200 Amp R&S Cat # 8434
  5. For Low Voltage Safety Systems, 32V 60~-1ϕ-2 Wire
     - Twist-Lock, 250 V. 2 Wire (t) 20 Amp. H.H. Cat. # 7210
- Explosion-Proof Receptacles For Class I Group D Hazardous Locations. Receptacles To Be As Described On Drawings
  6. For 120V. 60~-1ϕ-2 Wire System
     - (u) Arktite, Delayed Action, 20 Amp, 120V, 2-Wire, 3 Pole, C.H. Co. CES Series
  7. For Use With The Following Systems: 120/208V. 60~-3ϕ-4 Wire; 120/240 V. 60~-3ϕ-4 Wire; 220 V. 60~-3ϕ-3 Wire
     - (v) Arktite, Delayed Action, 230V, 3 Wire, 4 Pole, Style 2, C.H. Co. CES Series.
     - (w) Circuit Breaker Combinet With Interlocking Arktite, 250 V, 3 Wire, 4 Pole, Style 2, C.H. Co. EPC Series.
  8. For 440V. 60~-3ϕ-3 Wire Systems.
     - Delayed Action, 440 V, 3 Wire, 4 Pole. (x) 30 Amp R&S Cat # 4234 BC (y) 60 Amp R&S Cat # 4264 BC
     - Switch With Interlocked Receptacle, 600 V, 3 Wire, 4 Pole. (z) 20 Amp, R&S Cat. 4202 Series

Legend: H.H. - Harvey Hubbell, Inc. C.H. - Crouse Hinds Co. R&S. - Russell & Stoll Co. Inc.

- Multi-Outlet Duct - H.H. #5262, 115 V. Receptacles @ 2'-6" On Center Numbers Indicate Circuit No's. Mtg. Ht As Shown On Plans.

COMMUNICATIONS & ALARM SYMBOLS

- Telephone Terminal Cabinet, Size And Mounting As Indicated
- Intercommunications Terminal Cab. Size & Mounting As Indicated
- Fire Alarm Terminal Cabinet, Size And Mounting As Indicated
- Telephone Outlet Mount 12" Above Floor, Unless Otherwise Noted.
- Telephone Outlet - Floor Type
- Public Address Outlet - Mount 7'-6" Above Floor.
- Intercommunications Outlet Mount 7'-6" Above Floor.
- Annunciator Outlet Mount 7'-6" Above Floor.
- Fire Alarm Bell
- Manual Fire Alarm Box; Mount 4'-0" Above Floor.
- Microphone Outlet

SINGLE LINE DIAGRAM SYMBOLS

- Draw-Out Air Circuit Breaker, Trip Value Noted
- Draw-Out Air Circuit Breaker, Electrically Oper. Trip Value Noted
- Air Circuit Breaker, Trip Value Noted
- Fused Disconnect Switch
- Primary Fused Cutout
- Group Operated Switch With Horn Gap.

SINGLE LINE DIAGRAM SYMBOLS

- Magnetic Starter
- Combination Thermal Magnetic Breaker & Magnetic Motor Starter With Thermal Overloads. Addition Of Letter And/Or Numeral Primes And Subscripts To The Basic Symbol Indicate The Following:
  - Roman Numeral Prime = Starter Size
  - Subscript "R" = Reversing
  - Subscript 2S = Two Speed
  - Subscript DC = Direct Current Starter
- Thermal Magnetic Breaker & Contactor
- Motor Horsepower And Identification Noted
- Transformer, Description As Noted
- Lightning Arrester
- Cable Pothead

ELEMENTARY WIRING DIAGRAM SYMBOLS

- Pushbutton Station, Start-Stop, Momentary Contact
- Selector Switch, Three Position, Hand-Off-Automatic
- Single Pole, Manual Motor Starting Switch, w/Thermal Overload Element
- Normally Open Contact
- Normally Closed Contact
- Overload Relay Contact
- Magnetic Starter Or Contactor Operating Coil. Numeral Indicates Starter Number.
- Relay Coil. See Numbered Entry In Relay Schedule
- Pilot Light, A = Amber, R = Red, G = Green
- Electric Solenoid Operated Valve
- Pushbutton Station, Start-Stop, Maintained Contact
- Pushbutton, Lockout-Stop
- Low Voltage Transformer

OUTSIDE DISTRIBUTION SYMBOLS

- New Pole, Figures Indicate Pole Number, Length Of Pole & Class Of Pole.
- Existing Pole Figures Indicate Pole Number, Length Of Pole & Class Of Pole.
- New Primary Line, Number Type & Size Of Conductors As Shown On Plans.
- Existing Power Line
- Guys

FIXTURE SYMBOLS & DESCRIPTION

- A/180 Pendant Mounted Slimline Fixture w/Glass Or Plastic Side Panels, Louvered Bottom. 2-96" T-12 74 W Lamps High P.F. Lead Lag. 1-Two-Lamp 425 MA Ballast For Operation On 120 V.A.C. Fixture Similar To Type F-29 Dwg Nº 40-06-04 Sht 50. All Slimline Fixtures Shall Be Adaptable For Continuous Row Installation, Similar In Appearance.
- AA/180 Same As Type A/180 Except, Ceiling Mounted & Type F 27.
- Same As Type A/180 Except With 3-96" T-12 74 W Lamps. 1- Two Lamp, 1- Single Lamp 425 MA Ballast
- Same As Type A/270 Except Ceiling Mounted & Type F 27.
- Same As Type A/180 Except W/4-96" T-12 74 W Lamps 2- Two Lamp 425 MA Ballasts
- Same As Type A/360 Except Ceiling Mounted & Type F 27.
- Same As Type A/180 Except 2-48", T-12, 40 Watt Lamps.
- Same As Type AA/180 Except 2-48" T-12 40 Watt Lamps.
- Same As Type A/270 Except 3-48" T-12, 40 Watt Lamps.
- Same As Type AA/270 Except 3-48" T-12 40 Watt Lamps.
- Same As Type A/360 Except 4-48" T-12 40 Watt Lamps.
- Same As Type AA/360 Except 4-48" T-12 40 Watt Lamps.
- F/225 General Diffusion, One Piece Shallow Band Ceiling Fixture With Drum Type White Opal Glass Globe. Three 75 Watt Lamps. Type GL-2, Dwg. Nº 40-06-04, Sht. 19.
- F/150 Same As F/225 Except With 2-50 Watt Lamps.

FIXTURE SYMBOLS & DESCRIPTIONS

- C/180 Industrial Type Open End Pendant Mounted Slimline Fixture With 2-96" T-12 74W Lamps High P.F. Lead Lag Two-Lamp 425 MA Ballast For Operation On 120 V.A.C. Fixture Similar To Type "F" Dwg. 40-06-04 Sht. 43, And To Be Equipped With "Snap-On" Type Egg Crate Louver Providing Approximately 23°-25° Shielding.
- Same As Type C/180 Except Ceiling Mounted.
- Same As Type "C" Except W/3-96" T-12, 74 W Lamps 1-Two Lamp, 1-Single Lamp 425 MA Ballast.
- Same As Type C/270 Except Ceiling Mounted.
- Same As Type "C" Except W/4-96" T-12, 74 W Lamps, 2-Two Lamp 425 MA Ballast.
- Same As Type C/360 Except Ceiling Mounted.
- Same As Type C/180 Except W/2 - T-12, 40 Watt Lamps.
- Semi-Pendant Incandescent Fixture W/Low Absorption Diffusing Glass Globe, With 100 Or 150 Watt Lamp. Fixture Equal To Type "ES" Dwg 40-06-04. Sht. 12.
- Same As Type E/100 Except Ceiling Mounted (Type EC Dwg. 40-06-04)
- Same As Type E/100 Except With 200 Watt Lamps
- Same As Type E/200 Except Ceiling Mounted
- Keyless Porcelain Lamp Receptacle For 60-100 Watts Incandescent Lamps. Fixture Equal To Type L12 Dwg 40-06-04 Sht. 2
- Same As Type "G" Except Furnished With A Pull Switch Similar To Type "LRP" Sht. 2
- Industrial Dome Reflector For 100W Incandescent Lamp. Fixture Shall Be Equal To Type I-1 Dwg 40-06-04 Sht. 3.
- Same As Type "H" With 150 W Lamp - Type I-2 Dwg. 40-06-04 Sht. 3
- Same As Type "H" With 200 W Lamp - Type I-3 Dwg. 40-06-04 Sht. 3
- Same As Type "H" With 300-500 W Lamp Type I-4 Dwg. 40-06-04 Sht. 3
- Wall Bracket, With White Porcelain Base w/Receptacle & P.C.
- Street Lighting Fixture Equal To GE. Cat. Nº A4G134, Form 101S, I.E.S. Type V Distribution.
- Flood Light Equal To G.E. Cat Nº A43G23 Type L46
- Flood Light Equal To G.E. Cat Nº A43G33 Type L46 (With Aux. Reflector)
- Wall Mounted 120V. Signal Light With Red Prism And #GS6-6 Watt Candelabra Type Screw Base Lamp. Equal To Cannon Cat. # DNP-1.
- Ceiling Mounted Exit Lighting Fixture, 2-25 Watts, With Lettering & Double Arrow On Two Opposite Sides. Similar To Type X-3, Dwg. # 40-06-04 - Sheet # 22.
- Ceiling Mounted Exit Lighting Fixture, 2-25 Watts, With Lettering On One Side Only. Similar To Type X-3, Dwg. # 40-06-04, Sheet # 22.
- Ceiling Mounted Exit Lighting Fixture 2-25 Watts, With Lettering & One Way Arrow On Two Opposite Sides. Similar To Type X3 Dwg. #40-06-04 Sheet #22.
- Wall Bracket Exit Lighting Fixture 2-25 Watts With Lettering & One Way Arrow On Two Opposite Sides. Similar To Type X3 Dwg. #40-06-04 Sheet #22.
- Weatherproof Bracket Fixture With Glass Globe & Metal Guard 100 Or 200 Watt Lamp. Equal To Type [illegible] Dwg. Nº 40-06-04, Sht. 11.
- Three-Lamp High Bay Reflector Luminaire Consisting Of Three Standard Medium High Bay Reflectors Of Alzak-Finished Aluminum, Conduit-Connected To A Cast Junction Box & Clamped Together At Their Flanges. Two Reflectors Are To Be Equipped With 400 Watt Mercury Vapor Lamps Including The Necessary Ballast For Operation On 120 Volts. One Reflector To Be Equipped With 750 Watt Lamp On 120 Volts.
- Wall Mounted Exit Lighting Fixture, 2-25 Watt Lamps Similar To Type X-4 With 6" Letters, Dwg. Nº 40-06-04, Sht. 23, Except Surface Mounting.
- Same As Type "X" Except Ceiling Mounted.
- Vapor Proof Ceiling Mounted Fixture Equal To Type V-8, Dwg. 40-06-04, Sheet # 8.
- Heavy Duty Vapor Proof Lighting Fixture With Guard ... Equal To V-8, Dwg. 40-06-04 Sheet # 8. Suspended From A ... Conduit As Shown In Detail.

GENERAL NOTES

1. References To Manufacturers Are Used To Establish Type Of Equipment Only. Equipment By Other Manufacturers May Be Used When Equal & Suitable For The Purpose.
2. All Fluorescent Lamp Fixtures Without A Glass, Plastic Or Louvered Bottom Shall Be Provided With Safety Lamp Locks On All Tubes.
3. Conduit Runs Buried In The Ground Or In Slabs Shall Be A Minimum Of 3/4" Unless Otherwise Shown.
4. Drawing Nº 40-06-04 Is Corps Of Engineers Standard.
5. Where Slimline Lamps Are Indicated On The Fixture Schedule The Lamps Shall Be Standard Warm White. Where Rapid Start Fluorescent Lamps Are Indicated On The Fixture Schedule The Lamps Shall Be Standard Cool White.
6. All Symbols & Fixtures Description Covered By This Symbol List Do Not Necessarily Appear On The Drawings, As This Is A General Symbol List.
7. All Receptacles Shall Be Identified With A Stenciled Panel And Circuit Number. Regulated Voltage Outlet Receptacles Shall Have Red Painted Receptacle Cover Plates.

Revision	Date	Description	By
	MAR. '60	Rev. As Built, Contract DA-01-076-ENG-3650, Resident Engineer.	
		Revised Outside Distribution Symbols	

THE RALPH M. PARSONS COMPANY, ARCHITECTS - ENGINEERS, 617 SOUTH OLIVE STREET, LOS ANGELES, CALIFORNIA

CORPS OF ENGINEERS, U.S. ARMY, OFFICE OF THE DISTRICT ENGINEER, MOBILE, ALABAMA

U. S. ARMY ORDNANCE CORPS - REDSTONE ARSENAL - HUNTSVILLE, ALA. ARMY BALLISTIC MISSILE AGENCY

STRUCTURES AND MECHANICS BUILDING

LINE ITEM NGA-403-003(20)

ELECTRICAL

STRUCTURES AND MECHANICS UNIT SYMBOL LIST AND FIXTURE SCHEDULE

Drawn by: E.L.C. Traced by: Checked by: MCM. Submitted by: Approved: Date: OCTOBER 1956. Approved for the D.E.: LT. COL. CORPS OF ENGINEERS, ASST DISTRICT ENGINEER. Date: OCTOBER 1956. Scale: NONE. File No. RED-6770. PE: 4619. Drawing No. 60-09-03. Sheet 58 of 76.

E1

MSFC MASTER BID DISK 11-18-2013

NEW 4160 V. LINE

100 A 10000 A.I.C. | 200 A 10000 A.I.C. | 100 A 10000 A.I.C. | 200 A 10000 A.I.C.

750 KVA 4160/2400 - Y 240 V - 3Φ

750 KVA 4160/2400 - Δ 480 V, 3Φ

W.V. IND. MOTOR STARTER

200 HP 3 PH.

4160 INDUCTION MOTOR FOR REFRIG. COMPRESSOR

2000 A

240 VOLT MAIN SWITCHBOARD.

SPACE | 800 A | 800 | 800 | 800 | 100 A

1600 A

480 VOLT MAIN SWITCHBOARD

800 A | 400 A | 800 A | SPACE | SPACE

300 KVA - 4160/2400 - 120/208 V. 3Φ

240 V., 800 AMP., 3 PH., 4-WIRE PLUG-IN DUCT (N.E)

30 A | 100 A | 70 A | 70 A | 70 A | 70 A

4 KW WATER HEATER

C | C

WELDING RECEPTACLES

WELDING RECEPTACLES

240 V., 800 AMP., 3 PH., 4-WIRE PLUG-IN DUCT (S.E.)

100 A | 40 A | 70 A | 40 A | 70 A | 40 A | 70 A

C | C

WELDING RECEPTACLES

WELDING RECEPT.

240 V., 800 AMP., 3 PH., 4-WIRE PLUG-IN DUCT (N.W.)

40 A | 70 A | 40 A | 70 A | 40 A | 70 A | 40 A | 70 A | 40 A | 70 A

WELDING RECEPTACLES

TUBE FLARING

20 KW OVEN

200 KW NOISE INSULATION TILT

240 V., 800 AMP., 3 PH., 4 WIRE PLUG-IN DUCT (S.W.)

15 A 2 P | C | C | 100 A | 100 A | 100 A | 100 A | 100 A | 100 A | 100 A | 100 A | 40 A | 40 A | 70 A | 40 A | 70 A | 40 A | 70 A | 40 A | 70 A

1 KW | 4 KW

CALIBRATION ROOM

WELDING RECEPTACLES

WELDING RECEPTACLES

PANEL "PP1" (COMPRESSOR BLDG.)

SPACE | SPACE | 100 A | 50 A | 100 A | 300 A

C | C | C | C | C

15 KW BATTERY CHARGER

70 A | 40 A | 40 A

WELDING RECEPT.

1600 A

120/208 V., 3 PH., 4-WIRE MAIN SWITCHBOARD

70 A | 70 A | 100 A | 70 A | 100 A | 100 A | 100 A | 100 A | 70 A | 100 A | 100 A | 70 A | 70 A | 25 A | 25 A | 25 A | 70 A | 25 A | 25 A | 50 A | SPACE | SPACE | SPACE

PANEL "LA" | PANEL "LB" | PANEL "LC" | PANEL "LD" | PANEL "LE" | PANEL "LF" | PANEL "LG" | PANEL "LH" | PANEL "LJ" | PANEL "LK" | PANEL "LL" | PANEL "LMA" | PANEL "LM" | PANEL "PB" | PANEL "PC" | PANEL "PE" | 3 | REA | PANEL "PM" | PANEL "PN" | PANEL "PK"

PANEL "LMB"

P PHOTO-CELL

PANEL "PA"

PANEL "PD"

PANEL "PF"

PANEL "PG"

PANEL "PL"

480 V., 800 AMP., 3-PH., 4 WIRE PLUG-IN DUCT. (S.W.)

70 A | 50 A | 15 A | 30 A | 150 A | 70 A | 25 A

UC-2 | UC-3

FANS RM. 207

UC-5

DOORS

C 45 KW | R RECT

VIBR. LAB.

TEST LAB.

TUBE FLARING

MOTOR CONTROL CENTER - MCC 2. (HEATING & VENTILATING)

MOTOR CONTROL CENTER MCC 1 (COMPRESSOR ROOM)

450 A

AC-1 INSTRUMENT AIR COMPRESSOR | AIR COMPRESSORS | VACUUM PUMPS | SUMP AIR COMPRESSOR | CHILLED WATER PUMPS P-1 P-2 P-3 | COOLING TOWER FAN | AUX. OIL PUMPS PY-1A PY-1B | CONDENSER PUMP | PUMP JOB COMPRESSOR | HEATERS

480 V., 800 AMP., 3-PH., 4 WIRE PLUG-IN DUCT. (S.E.)

175 A | 150 A | 300 A | 150 A | 100 A | 40 A | 50 A | 15 A

LO-BAY CRANE (*) | LO-BAY CRANE (W) | HI-BAY CRANE | EAST DOORS | CP-1 RM. 139 | SHAKER ROOM | UV-2 RM. 158 | UV-3 RM. 161 | CP-2 FAN RM. 208 | UC-4 | E4 | UC-1 | FANS RM. 202 | UV-1

REVISION	DATE	DESCRIPTION	BY	BY
	MAR. '60	REV. CONTRACT NO. DA-01-021-ENG-3600 RESIDENT ENGINEER		
A	OCT. '56	DELETED SUB-STATION NOTE		

THE RALPH M. PARSONS COMPANY
ARCHITECTS - ENGINEERS
617 SOUTH OLIVE STREET
LOS ANGELES, CALIFORNIA

CORPS OF ENGINEERS
U.S. ARMY
OFFICE OF THE DISTRICT ENGINEER
MOBILE, ALABAMA

DRAWN BY: G.L. FOXWELL
TRACED BY:
CHECKED BY: M.E.M.
SUBMITTED BY:
APPROVED: CHIEF, DESIGN BRANCH

U. S. ARMY ORDNANCE CORPS - REDSTONE ARSENAL - HUNTSVILLE, ALA.
ARMY BALLISTIC MISSILE AGENCY

STRUCTURES AND MECHANICS BUILDING
LINE ITEM NO. A-803-803.120
ELECTRICAL
STRUCTURES AND MECHANICS UNIT
SINGLE LINE WIRING DIAGRAM

APPROVED: CHIEF, ENGINEERING DIVISION
DATE: OCTOBER 1956

APPROVED: FOR THE D.E.
LT. COL., CORPS OF ENGINEERS, ASST. DISTRICT ENGINEER
DATE: OCTOBER 1956

SCALE: NONE
FILE NO. RED-6771

PE: 4619
DRAWING NO. 60-09-03
SHEET 59 OF 70

E2

E2 " 13

MSFC MASTER BID DISK 11-18-2013

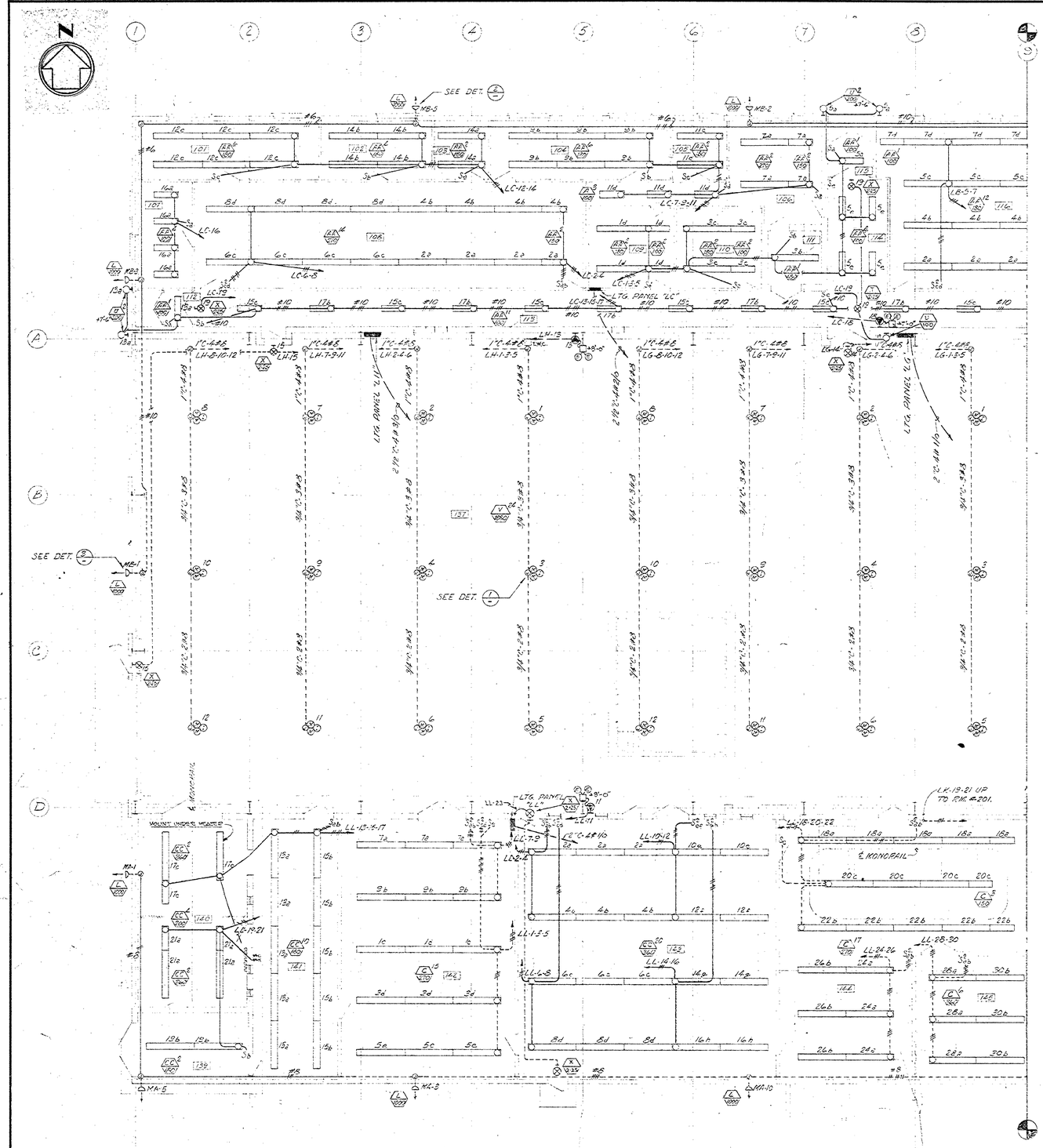

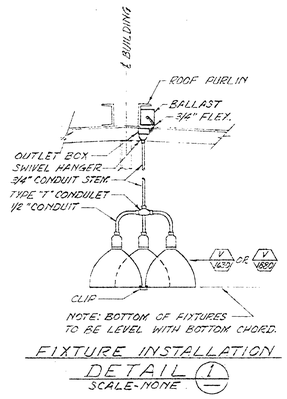

FIXTURE INSTALLATION
DETAIL 1
SCALE - NONE

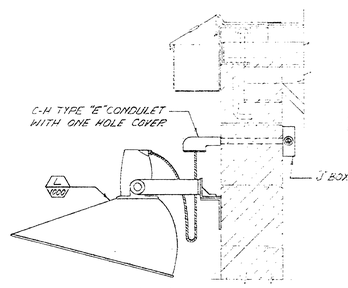

NORTH & SOUTH WALL FIXTURE INSTALLATION
DETAIL 2
SCALE - NONE

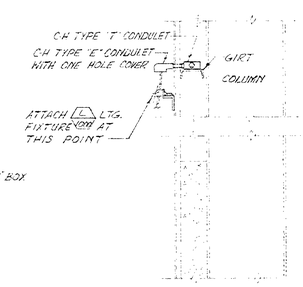

EAST & WEST WALL FIXTURE INSTALLATION
DETAIL 3
SCALE - NONE

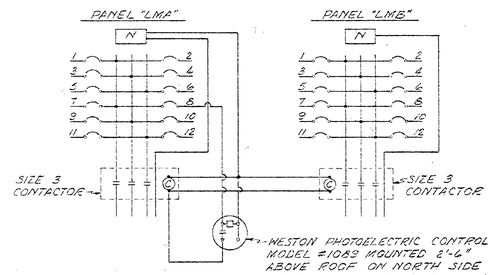

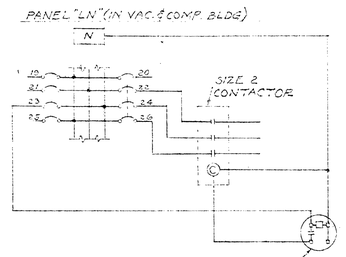

FLOODLIGHT CONTROL DIAGRAM

NOTES

1. FOR SYMBOLS, FIXTURE SCHEDULE & GENERAL NOTES SEE SHT. # E-1.
2. FOR CONTINUATION OF THIS LIGHTING PLAN SEE SHT. # E-4.
3. FOR LIGHTING PANEL SCHEDULES SEE SHEET # 12

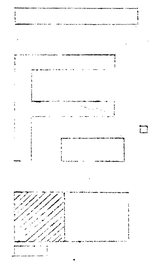

KEY PLAN

REVISION	DATE	DESCRIPTION	BY	BY	BY
	MAR. '60	REVISED PANEL DATA PER LENG 3650, RESIDENT ENGINEER LTR 4/1/60			

THE RALPH M. PARSONS COMPANY
ARCHITECTS - ENGINEERS
617 SOUTH OLIVE STREET
LOS ANGELES, CALIFORNIA

CORPS OF ENGINEERS
U.S. ARMY
OFFICE OF THE DISTRICT ENGINEER
MOBILE, ALABAMA

DRAWN BY: D. SMITH
TRACED BY:
CHECKED BY: C.F.M.
M.E.M.
SUBMITTED BY: Geo. D. McCarroll
APPROVED: (CHIEF, DESIGN BRANCH)

U. S. ARMY ORDNANCE CORPS – REDSTONE ARSENAL – HUNTSVILLE, ALA.
ARMY BALLISTIC MISSILE AGENCY

STRUCTURES AND MECHANICS BUILDING
LINE ITEM NO. A-903-803.120
ELECTRICAL
STRUCTURES AND MECHANICS UNIT
LIGHT PLAN - WEST END

APPROVED: W. Porter (CHIEF, ENGINEERING DIVISION)
DATE: OCTOBER 1956

APPROVED: FOR THE D.E.
Robert F. Hanson
LT. COL., CORPS OF ENGINEERS, ASST. DISTRICT ENGINEER
DATE: OCTOBER 1956

SCALE: 1/8" = 1'-0"
FILE NO. RED-6772
PE: 4619
DRAWING NO. 60-09-03
SHEET 60 OF 115

E3

GRAPHIC SCALE
INCHES 0 1/2 1 2 3

Accident's Cut Safety Plug

E3 - 13

MSEC MASTER BID DISK 11-18-2013

CORPS OF ENGINEERS

U. S. ARMY

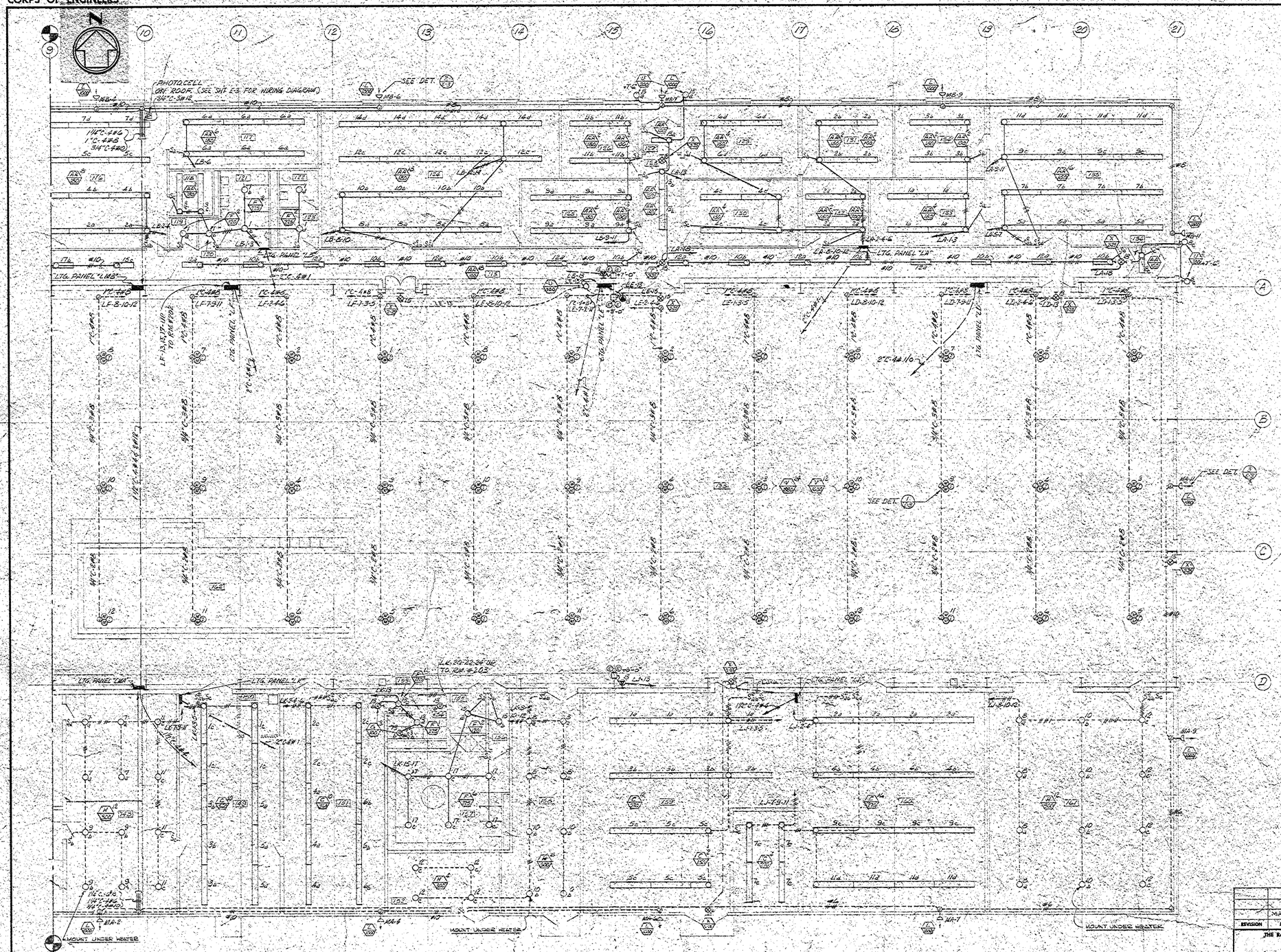

NOTES

1. FOR SYMBOLS, FIXTURE SCHEDULE & GENERAL NOTES SEE SHT. # E-1.
2. FOR CONTINUATION OF THIS LIGHTING PLAN SEE SHT. # E-2
3. FOR LIGHTING PANEL SCHEDULES SEE SHEET # 12

KEY PLAN

GRAPHIC SCALE

INCHES 0 1/2 1 2 3

E4

MAR. '60 REV. AS PER CONTRACT DA-01-076-ENG-2626, RESIDENT ENGINEER

REVISION	DATE	DESCRIPTION	BY	BY	BY

THE RALPH M. PARSONS COMPANY
ARCHITECTS - ENGINEERS
617 SOUTH OLIVE STREET
LOS ANGELES, CALIFORNIA

CORPS OF ENGINEERS
U.S. ARMY
OFFICE OF THE DISTRICT ENGINEER
MOBILE, ALABAMA

DRAWN BY: D.E. SMITH
TRACED BY:
CHECKED BY: C.P.M. / M.C.M.
SUBMITTED BY:
APPROVED:
CHIEF DESIGN BRANCH

U. S. ARMY ORDNANCE CORPS — REDSTONE ARSENAL — HUNTSVILLE, ALA.
ARMY BALLISTIC MISSILE AGENCY

STRUCTURES AND MECHANICS BUILDING

LINE ITEM NO. A-903-803.120

ELECTRICAL

STRUCTURES AND MECHANICS UNIT
LIGHT PLAN-EAST END

APPROVED:
CHIEF, ENGINEERING DIVISION

DATE: OCTOBER 1956

APPROVED FOR THE D.E.
LT. COL. CORPS OF ENGINEERS, ASST. DISTRICT ENGINEER

DATE: OCTOBER 1956

SCALE: 1/8"=1'-0"
FILE NO: RED-6743

PE: 4619
DRAWING NO. 60-09-03
SHEET 61 OF 70

MSFC MASTER BID DISK 11-18-2013

CORPS OF ENGINEERS

U. S. ARMY

EQUIPMENT ROOM PENTHOUSE S.BAY (ROOM 201)

EQUIPMENT ROOM PENTHOUSE - N.BAY (RM 202)

EQUIPMENT RM. PENTHOUSE S. BAY (RM. 205)

WELDING OUTLET DETAIL (1) NO SCALE

TRENCH GROUND TERMINAL DETAIL (2)

KEY PLAN

NOTE 1

THE GROUND WIRE SHALL NOT GO THRU THE JOINT BETWEEN THE ISOLATION PAD AND THE ADJACENT CONCRETE BUT MUST BE PLACED IN THE GROUND FOR A DISTANCE OF AT LEAST 3 FEET.

REVISION	DATE	DESCRIPTION	BY	BY	BY
(B)	MAR '60	ADDED HEAT FLUX SIMULATOR BLDG 4619 REVISED PER DISTRICT ENGINEER	CFH	GWY	EHD
(A)	29 OCT 58	ADD CIR. FOR P-101	LMA	LMA	JLA

THE RALPH M. PARSONS COMPANY
ARCHITECTS - ENGINEERS
617 SOUTH OLIVE STREET
LOS ANGELES, CALIFORNIA

CORPS OF ENGINEERS
U. S. ARMY
OFFICE OF THE DISTRICT ENGINEER
MOBILE, ALABAMA

DRAWN BY: JOHN J. CLARK
TRACED BY:
CHECKED BY: CFH, M.C.M
SUBMITTED BY:

U. S. ARMY ORDNANCE CORPS — REDSTONE ARSENAL — HUNTSVILLE, ALA.
ARMY BALLISTIC MISSILE AGENCY

STRUCTURES AND MECHANICS BUILDING
LINE ITEM NO. A-803-803.120
ELECTRICAL
STRUCTURES AND MECHANICS UNIT
POWER PLAN-WEST END-

APPROVED: CHIEF, DESIGN BRANCH
APPROVED: CHIEF, ENGINEERING DIVISION
DATE: OCTOBER 1956

APPROVED FOR THE C.E.: Lt. Col. Corps of Engineers, Asst District Engineer
DATE: OCTOBER 1956

SCALE: 1/8"=1'-0"
FILE NO.: RED-6774
PE: 4619
DRAWING NO. 60-09-03
SHEET: 62 OF 78

E 5

GRAPHIC SCALE
INCHES 0 1/2 1 2 3

MSFC MASTER BID DISK 11-18-2013

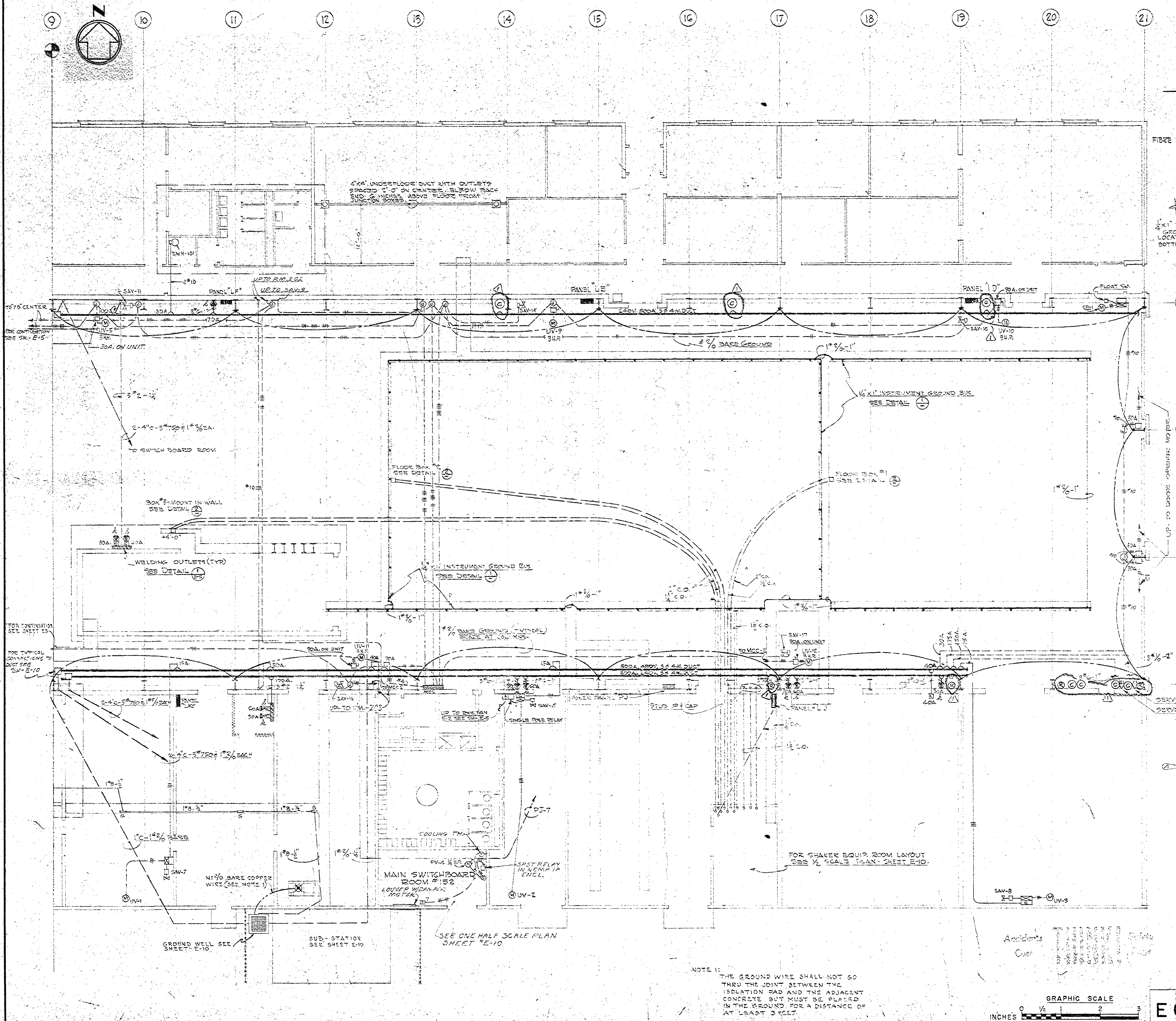

NOTE 1:
THE GROUND WIRE SHALL NOT GO THRU THE JOINT BETWEEN THE ISOLATION PAD AND THE ADJACENT CONCRETE BUT MUST BE PLACED IN THE GROUND FOR A DISTANCE OF AT LEAST 3 FEET.

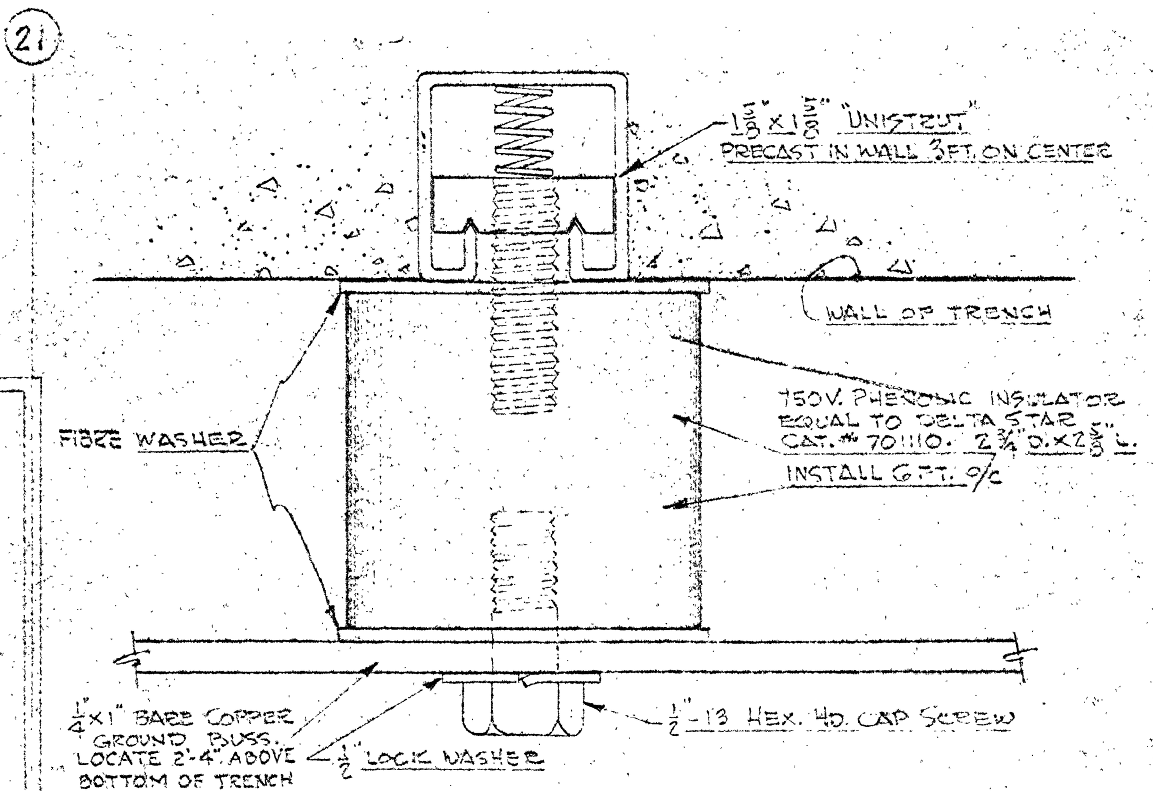

INSTRUMENT GROUND BUS DETAIL (1)
SCALE-FULL SIZE

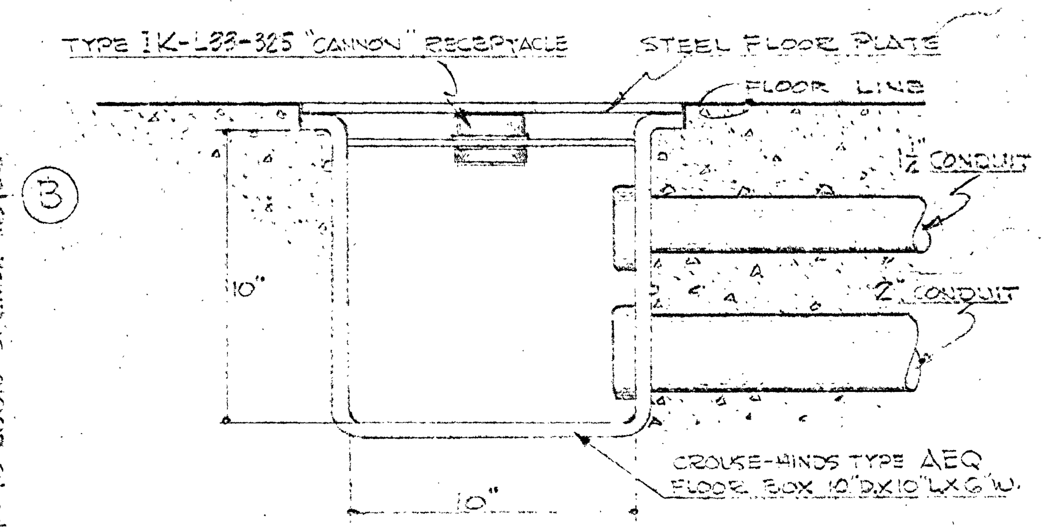

INSTRUMENTATION FLOOR BOX DETAIL (2)
NO SCALE

NOTE FOR MAINT.

Ⓡ EXISTING RUSSEL & STOLL RECEPTACLES-REMOVE RECEPTACLES, BOXES AND REPLACE WITH CROUSE-HINDS AR 1031 (3W. 3P. 100A) USE EXISTING CONDUIT & WIRE. TOTAL 3 REQUIRED.

Ⓒ EXISTING CROUSE-HINDS AR-42 60AMP RECEPTACLE-REMOVE CONDUIT, BUSDUCT BREAKER, WIRE AND RECEPTACLE. INSTALL NEW 100A. 3POLE CIRCUIT BREAKER, 1 1/2"C, 4#4 WIRE AND CROUSE-HINDS AR 1041 (3W. 4P. 100A) RECEPTACLE. TOTAL 3 REQUIRED

(A) NOTE 2:
REFERENCES TO MANUFACTURERS ARE USED TO ESTABLISH TYPE OF EQUIPMENT ONLY. EQUIPMENT BY OTHER MANUFACTURERS MAY BE USED WHEN APPROVED EQUAL & SUITABLE FOR THE PURPOSE.

KEY PLAN

REVISION	DATE	DESCRIPTION	BY	BY	BY
1	11-1-66	WORK IN CIRCLED AREA BY MAINT. BR.			
	MAR. '60	REV. [illegible] ENG 3650, RESIDENT ENGINEER			
A	19 Oct. '56	ADDED NOTE 2.			

THE RALPH M. PARSONS COMPANY
ARCHITECTS - ENGINEERS
617 SOUTH OLIVE STREET
LOS ANGELES, CALIFORNIA

CORPS OF ENGINEERS
U. S. ARMY
OFFICE OF THE DISTRICT ENGINEER
MOBILE, ALABAMA

DRAWN BY: JOHN J. CLARK
TRACED BY:
CHECKED BY: CFW MCM
SUBMITTED BY: [signature]

U. S. ARMY ORDNANCE CORPS — REDSTONE ARSENAL — HUNTSVILLE, ALA.
ARMY BALLISTIC MISSILE AGENCY

STRUCTURES AND MECHANICS BUILDING

LINE ITEM NO. A-803-803.120

ELECTRICAL

STRUCTURES AND MECHANICS UNIT
POWER PLAN-EAST END

APPROVED: [signature] CHIEF, DESIGN BRANCH
APPROVED: [signature] CHIEF, ENGINEERING DIVISION
DATE: OCTOBER 1956

APPROVED: FOR THE D.E. [signature]
LT.COL., CORPS OF ENGINEERS, ASST. DISTRICT ENGINEER
DATE: OCTOBER 1956

SCALE: 1/8" = 1'-0"
FILE NO. RED-6775
PE: 4619
DRAWING NO. 60-09-03
SHEET 63 OF [illegible]

GRAPHIC SCALE
INCHES 0 1/2 1 2 3

E 6

MSFC MASTER BID DISK 11-18-2013

CORPS OF ENGINEERS

U. S. ARMY

FOR CONTINUATION SEE SHEET E-7

TELEPHONE TERM. "T2" (12"X24"X6")
12 A TERM. 2 EA. 2" (8"X24"X6")

TO T5 & PA5

TO T1 & PA1

LA-19,21,23

LA 20,22,24

LA-14,16

LA-15,17

POWER PANEL "PK"

PANEL "LP"

PANEL "LO"

PANEL "LE"

PANEL "LK"

4"C-12 TO SWITCHBOARD EM.

DETAIL 1

TO T3 & PA3

TO T2 & PA2

PJ-8,10

POWER PANEL "PG"

POWER PANEL "PH"

POWER PANEL "PJ"

PJ-1,3,5

PJ-2,4,6

PJ-13,5

PJ-9

PANEL "LK"

PANEL "LF"

TELEPHONE TERM. "T1" (12"X28"X6")
PA TERM. "PA1" (12"X26"X6")

TO SWITCHBOARD 3.99M

LJ-14,16,18

TO PANEL "PP"

FOR CONTINUATION SEE SHEET E-7

GRAPHIC SCALE
INCHES 0 1/2 1 2 3

NOTE
1. ALL CONVENIENCE RECEPTACLES AND PANELS SHALL BE IDENTIFIED WITH STENCILED PANEL & CIRCUIT NO.
2. REGULATED VOLTAGE RECEPTACLES SHALL BE IDENTIFIED WITH RED PAINTED RECEPTACLE COVER PLATES IN ADDITION TO THE STENCILED PANEL & CIRCUIT NUMBER.

KEY PLAN

NOTE: SLOT TO BE FREE OF BURRS & SHARP EDGES

2"X2"X¼" L

FLOOR RECEPTACLE DETAIL 1 NO SCALE

3"X5"L SEE STRUCTURAL TRENCH DETAILS

⅝" THICK COVER HINGED ON ¾" ROD

FLOOR LINE

½"X2" BAR

NOTE: WELD ALL JOINTS

45 BOX

WALL LINE OF TRENCH

SECTION A NO SCALE

REVISION	DATE	DESCRIPTION	BY	BY	BY
	MAR. 60	REV. AS BUILT CONDITIONS DN 01-076-ENG 56.00			
(A)	23 APR 57	ADDED CONDUIT SEE E-7	PW	LME	JLA

THE RALPH M. PARSONS COMPANY
ARCHITECTS - ENGINEERS
617 SOUTH OLIVE STREET
LOS ANGELES, CALIFORNIA

CORPS OF ENGINEERS
U.S. ARMY
OFFICE OF THE DISTRICT ENGINEER
MOBILE, ALABAMA

DRAWN BY: JOSEPH CLARK
TRACED BY:
CHECKED BY: M C M
SUBMITTED BY:

U. S. ARMY ORDNANCE CORPS — REDSTONE ARSENAL — HUNTSVILLE, ALA.
ARMY BALLISTIC MISSILE AGENCY

STRUCTURES AND MECHANICS BUILDING

LINE ITEM NO. A-803-803.120

ELECTRICAL

STRUCTURES AND MECHANICS UNIT

RECEPTACLES AND COMMUNICATIONS PLAN - EAST END

APPROVED: CHIEF, DESIGN BRANCH

APPROVED: CHIEF, ENGINEERING DIVISION

DATE: OCTOBER, 1956

APPROVED FOR THE D.E.
LT. COL., CORPS OF ENGINEERS, ASST. DISTRICT ENGINEER

DATE: OCTOBER, 1956

SCALE: 1/8"=1'-0"

FILE NO. RED-6777

PE: 4-619

DRAWING NO. 60-09-03

SHEET 65 OF 76

E8

E-8 13

MSFC MASTER BID DISK 11-18-2013

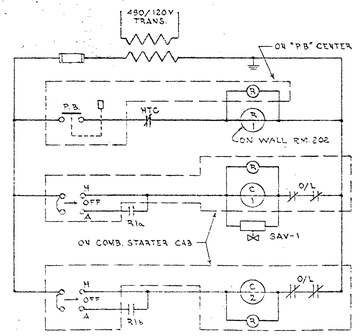

SCHEMATIC DIAGRAM FOR
UNIT CONDITIONER SYSTEM
UC-1

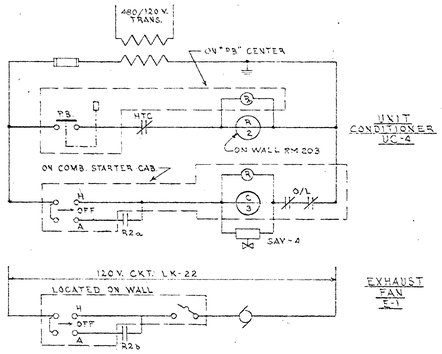

SCHEMATIC DIAGRAM FOR
UNIT CONDITIONER SYSTEM
UC-4

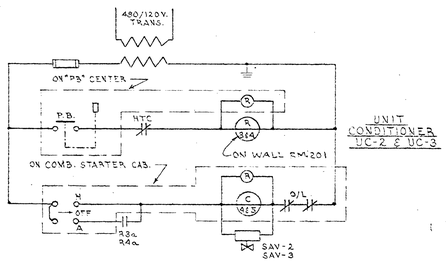

SCHEMATIC DIAGRAM FOR
UNIT CONDITIONER SYSTEM
UC-2 & UC-3

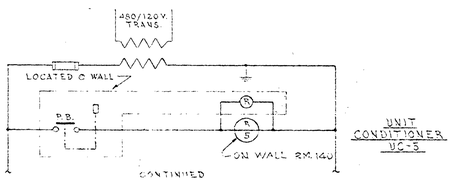

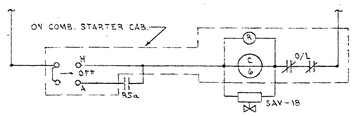

SCHEMATIC DIAGRAM FOR
UNIT CONDITIONER SYSTEM
UC-5

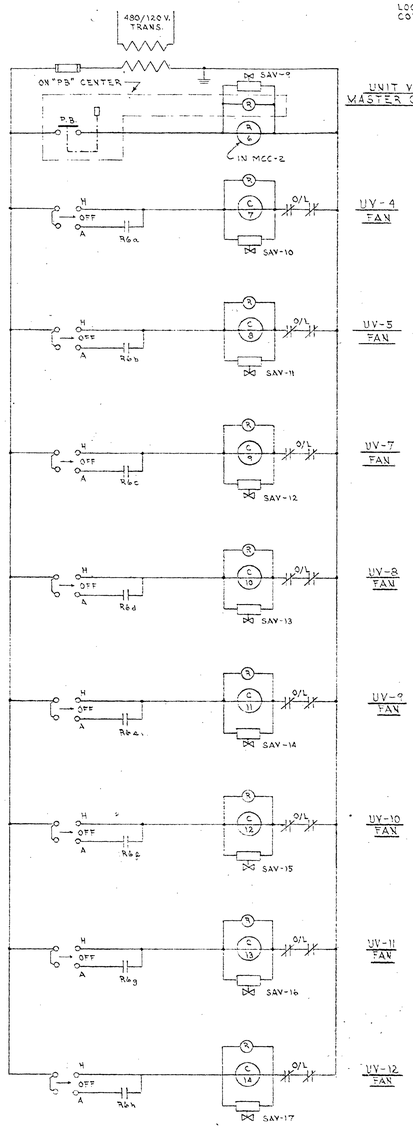

SCHEMATIC DIAGRAM FOR
UNIT VENTILATORS
UV-4, 5, 7, 8, 9, 10, 11, & 12

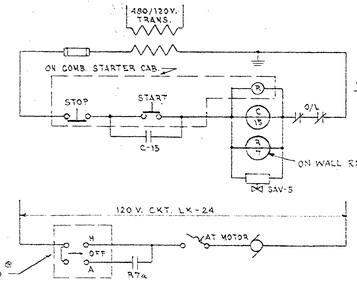

SCHEMATIC DIAGRAM FOR
UNIT VENTILATOR SYSTEM
UV-2

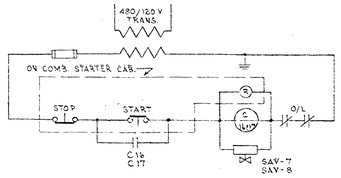

SCHEMATIC DIAGRAM FOR
UNIT VENTILATORS
UV-1 & UV-3

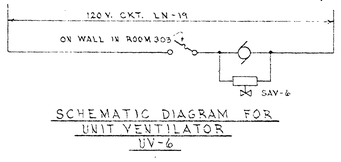

SCHEMATIC DIAGRAM FOR
UNIT VENTILATOR
UV-6

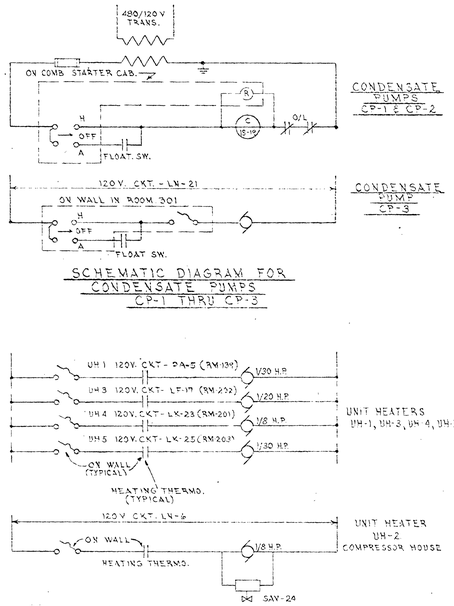

SCHEMATIC DIAGRAM FOR
CONDENSATE PUMPS
CP-1 THRU CP-3

SCHEMATIC DIAGRAM FOR
UNIT HEATERS
UH-1 THRU UH-5

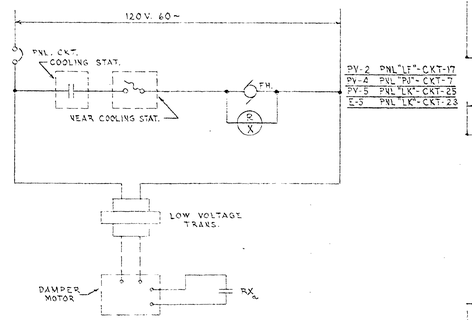

TYPICAL SCHEMATIC DIAGRAM
FOR POWER VENTILATORS
PV-2, PV-4, PV-5 & E-5
(RM.202) (RM.152) (RM.203) (RM.201)

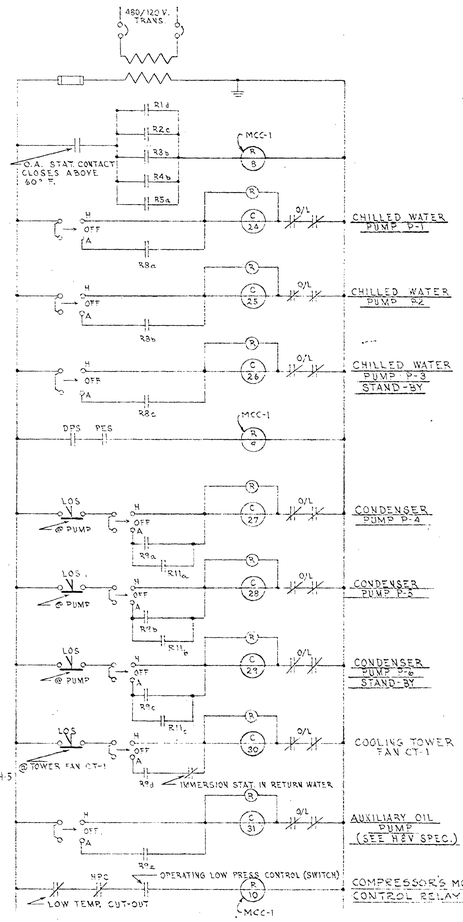

SCHEMATIC DIAGRAM FOR
CHILLED WATER SYSTEM

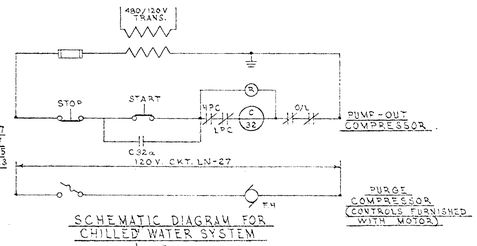

SCHEMATIC DIAGRAM FOR
CHILLED WATER SYSTEM

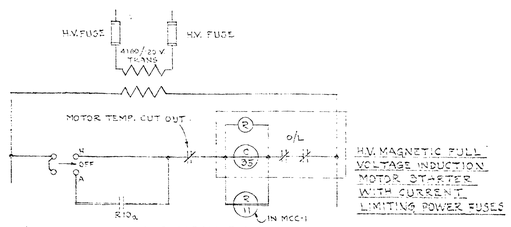

SCHEMATIC DIAGRAM FOR
CHILLED WATER SYSTEM

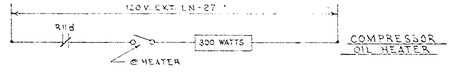

SCHEMATIC DIAGRAM FOR
CHILLED WATER SYSTEM

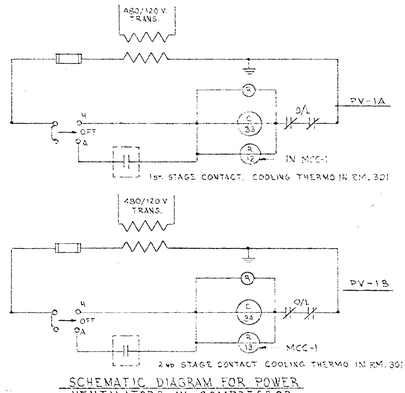

SCHEMATIC DIAGRAM FOR POWER
VENTILATORS IN COMPRESSOR
ROOM

FOR NOTES & CONTINUATION, SEE SHALL E-10

REVISION	DATE	DESCRIPTION	BY	BY	BY
	MAR 60	REV.			

THE RALPH M. PARSONS COMPANY
ARCHITECTS - ENGINEERS
617 SOUTH OLIVE STREET
LOS ANGELES, CALIFORNIA

CORPS OF ENGINEERS
U.S. ARMY
OFFICE OF THE DISTRICT ENGINEER
MOBILE, ALABAMA

DRAWN BY: G. L. F.
TRACED BY:
CHECKED BY: M.C.M.
SUBMITTED BY:

U. S. ARMY ORDNANCE CORPS — REDSTONE ARSENAL — HUNTSVILLE, ALA.
ARMY BALLISTIC MISSILE AGENCY

STRUCTURES AND MECHANICS BUILDING

LINE ITEM NO. A-803-803.120

ELECTRICAL

STRUCTURES AND MECHANICS UNIT
HEATING AND VENTILATING CONTROL DIAGRAM

APPROVED: CHIEF, DESIGN BRANCH
APPROVED: CHIEF, ENGINEERING DIVISION
DATE: OCTOBER, 1956

APPROVED FOR THE D.E.
LT. COL., CORPS OF ENGINEERS, ASST. DISTRICT ENGINEER
DATE: OCTOBER, 1956

SCALE: NONE.
FILE NO.
RED-6778

PE: 4619

DRAWING NO. 60-09-03
SHEET 66 OF 210

E 9

MSFC MASTER BID DISK 11-18-2013

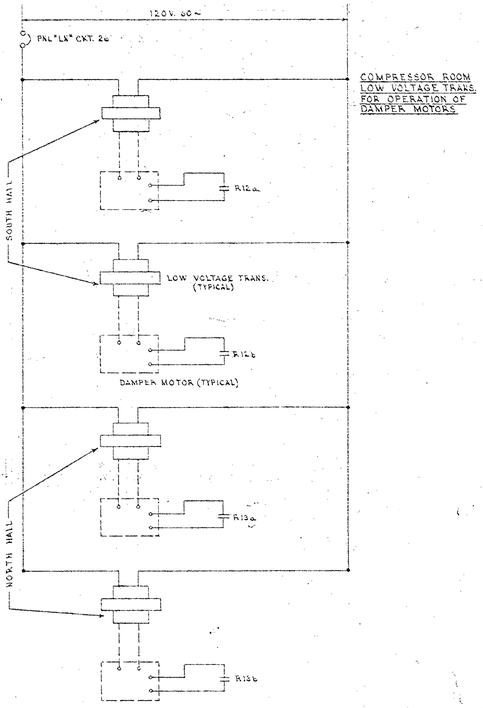

SCHEMATIC DIAGRAM OF LOW VOLTAGE TRANSFORMERS FOR DAMPER MOTORS

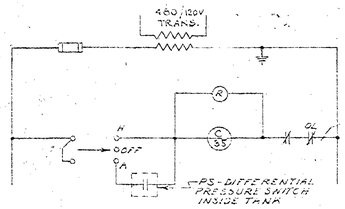

SCHEMATIC DIAGRAM OF INSTRUMENT AIR COMPRESSOR AC-1

NOTES

1. ALL ACTUATORS I.E. PILOT LIGHTS, SELECTOR SWITCHES, PUSH BUTTONS ECT. SHALL BE LOCATED ON COVER OF MOTOR CONTROL CENTER (RESPECTIVE STARTER COMPARTMENTS AND RELAY STATIONS) EXCEPT AS OTHERWISE INDICATED ON SCHEMATIC DIAGRAMS OR PLANS.
2. LOCATION OF PILOT LIGHTS I.E. FLOAT SWITCHES, THERMOSTATS ECT. SHALL BE AS INDICATED ON PLANS. SEE CORRESPONDING PLANS FOR EXACT LOCATION.
3. EACH INDIVIDUAL MOTOR STARTER SHALL HAVE A CONTROL TRANSFORMER, 480/120 V. IF SIZE AS REQUIRED, EXCEPT WHERE COMBINED TRANSFORMER IS INDICATED ON SCHEMATICS. IN SUCH CASE THE SIZE SHALL BE AS REQUIRED AND SHALL BE CONNECTED ON THE LOAD SIDE OF THE FIRST COMBINATION STARTER UNLESS PROVING THE PHYSICAL SIZE IS NIGHT TO FIT IN THIS COMBINATION STARTER COMPARTMENT. WHERE CONTROL CIRCUIT CONSISTS OF NUMEROUS STARTERS, RELAYS, SOLENOIDS ECT. CONTROL TRANSFORMER SHALL BE LOCATED IN RELAY SECTION OF MOTOR CONTROL CENTER AND SHALL BE PROVIDED WITH ITS OWN CIRCUIT BREAKER, TO BE OPERATED FROM THE FRONT OF MOTOR CONTROL CENTER.

Accidence Cost

REVISION	DATE	DESCRIPTION	BY	BY	BY
	MAR. 60	REV. [illegible] RESIDENT ENGINEER [illegible]			

THE RALPH M. PARSONS COMPANY
ARCHITECTS - ENGINEERS
617 SOUTH OLIVE STREET
LOS ANGELES, CALIFORNIA

CORPS OF ENGINEERS
U. S. ARMY
OFFICE OF THE DISTRICT ENGINEER
MOBILE, ALABAMA

U. S. ARMY ORDNANCE CORPS — REDSTONE ARSENAL — HUNTSVILLE, ALA.
ARMY BALLISTIC MISSILE AGENCY

STRUCTURES AND MECHANICS BUILDING
LINE ITEM NO. A-803-803.120
ELECTRICAL
STRUCTURES AND MECHANICS UNIT
HEATING AND VENTILATING CONTROL DIAGRAM

DRAWN BY: G.L.F.
TRACED BY:
CHECKED BY: C.F.M. M.G.M.
SUBMITTED BY: [signature]
APPROVED: [signature] CHIEF, DESIGN BRANCH
APPROVED: [signature] CHIEF, ENGINEERING DIVISION
DATE: OCTOBER, 1956

APPROVED FOR THE D.E.: [signature] LT. COL., CORPS OF ENGINEERS, ASST. DISTRICT ENGINEER
DATE: OCTOBER, 1956

SCALE: NONE
FILE NO. RED-6779

PE: 4619
DRAWING NO. 60-09-03
SHEET 67 OF 70

E 10

MSFC MASTER BID DISK 11-18-2013

CORPS OF ENGINEERS

U. S. ARMY

NOTE: 36"W X 48"H X 10"D. JUNCTION BOX W/HINGED DOOR & HANDLE LOCK, NEMA 12. CONSTRUCTION SUPPORT ON UNISTRUT.

TO 5 SHAKER FLOOR OUTLETS

400 CYCLE

60 CYCLE

TO 480V. BUS DUCT

TO PANEL-LH

STEEL ANGLE

PLAN-SHAKER EQUIP ROOM-163

SCALE ½"=1'-0"

BUS DUCT HANGER SUPPORT DETAIL 1

SCALE ½"=1'-0"

SEE DETAIL 2

5/8" ANCHOR BOLT

BUS DUCT HANGER SUPPORT DETAIL 2

NO SCALE

BUS DUCT

BUS DUCT HANGER

BUS DUCT HANGER SUPPORT DETAIL 3

NO SCALE

5/8" ANCHOR BOLT

SLAM SCALE 6"x½"x1'-4" LG. TYPICAL 2 PLACES

GROUND WELL SEE SECTION B

NOTE: FOR STRUCTURAL DETAILS SEE SECT "M" ON SHEET 5-5

1200 A. 120/208V. 3Ø, 4W. AIR RECIRC DUCT WITH HALF NEUTRAL LIGHTING

2000 A. 240V. 3Ø, 3W. W/FEEDER DUCT ROUTED

CABLE END BOX

NEUTRAL BUS

SUBSTATION BUS

PLAN AT SUB-STATION & SW. BOARD RM. #152

SCALE ¼"=1'-0"

S.W. S.E. N.W. N.E.

8-4"C-8"750 ϕ 1-⅝" BARE TO 240V. PLUG-IN DUCT.

4-4"C-8"750 ϕ 1-⅝" BARE TO 480V. PLUG-IN DUCT.

S.W. S.E.

FRONT OF SWITCH BOARD

5'-2-⅛" TO COMPR. BLDG.

4-4"-½" TO COMPR. BUILDING

4-4"C-½"

8"500 MCM-3" TO COMPRESSOR BLDG.

3-4" CONDUITS ONLY. STUB OUT & CAP FOR 480V. SP. SERVICE.

SEE DETAIL 2

5⅝"

PITCH DIA. AT CENTRE AS REQUIRED X .600

AMERICAN STANDARD TAPPED THREAD TAP

CAST COPPER COUPLING

2" EXTRA HEAVY IRON PIPE

#4/0 COPPER TYPE K WITH CRIMPIT TYPE NVIT CONNECTION

#4/0 BARE COPPER WIRE

#4/0 BARE WIRE IN DUCT

NO 4/0 RW WIRES IN CONDUIT

NO 4/0 BARE COPPER WIRE

NOTE: FOR STRUCTURAL DETAILS SEE SECT "M" ON SHEET 5-5

SECTION B

GROUND WELL

NO SCALE

ROOF LINE

STEEL SHAPES

SEE DETAIL 1

BUS DUCT HANGER

CABLE END BOX

SECONDARY BUS RACK-CABLES AND CONNECTIONS PUNCHED AND INSTALLED UNDER SUBSTATION WORK

MAIN SWITCH BOARD

7'-8"

SECTION A

SCALE ½"=1'-0"

DUCT SUPPORT TYPICAL MAX. 5'-0" ON CENTER

BRANCH CIRCUIT BREAKERS MOUNTED TOP OR BOTTOM OF DUCT

5" CONCRETE WALL

4" CONDUITS TO SW. BOARD

MIN. TO CLEAR DOOR

12"x12"x36" PULL BOXES

FLOOR LINE

SIDE ELEVATION

SCALE ½"=1'-0"

COLUMN

FOR DUCT SUPPORTS SEE STRUCTURAL DETAILS 1 S-20

480V DUCT

L.B. CONDUIT

WALL

4" CONDUITS TO SW. BOARD ROOM

FLOOR LINE

END ELEVATION

SCALE ½"=1'-0"

(TYPICAL) PLUG-IN DUCT FEEDER CONNECTIONS - PARTIAL SOUTH WALL SHOWN FOR TWO DUCTS - NORTH WALL SIMILAR FOR 240 V. ONLY

NOTE: REFERENCES TO MANUFACTURERS ARE USED TO ESTABLISH TYPE OF EQUIPMENT ONLY. EQUIPMENT OF OTHER MANUFACTURERS MAY BE USED WHEN APPROVED EQUAL AND SUITABLE FOR THE PURPOSE.

Accidents: [illegible] Safety

Cost: [illegible] Days

GRAPHIC SCALE

INCHES 0 ½ 1 2 3

E11

REVISION	DATE	DESCRIPTION	BY	BY	BY
	MAR. '60	REV. AS BUILT			
A	19 OCT. 56	ADDED NOTE.			

THE RALPH M. PARSONS COMPANY
ARCHITECTS-ENGINEERS
617 SOUTH OLIVE STREET
LOS ANGELES, CALIFORNIA

CORPS OF ENGINEERS
U. S. ARMY
OFFICE OF THE DISTRICT ENGINEER
MOBILE, ALABAMA

DRAWN BY: JOHN J. LEREK
TRACED BY:
CHECKED BY: MCM
SUBMITTED BY:
APPROVED: CHIEF, DESIGN BRANCH

U. S. ARMY ORDNANCE CORPS — REDSTONE ARSENAL — HUNTSVILLE, ALA.
ARMY BALLISTIC MISSILE AGENCY

STRUCTURES AND MECHANICS BUILDING
LINE ITEM NO. A-603-603.120
ELECTRICAL
STRUCTURES AND MECHANICS UNIT
DETAILS AND SECTION

APPROVED: CHIEF, ENGINEERING DIVISION
DATE: OCTOBER, 1956

APPROVED FOR THE D.E.
LT. COL., CORPS OF ENGINEERS, ASST. DISTRICT ENGINEER
DATE: OCTOBER, 1956

SCALE: AS NOTED.
FILE NO. RED-6780

PE: 4619
DRAWING NO. 60-09-03
SHEET 68 OF XX

E11 13

MSFC MASTER BID DISK 11-18-2013

SCHEDULE — LIGHTING PANEL "LA"

CIR. NO.	BRKR. AMPS.	No. Poles	No. Out	TYPE LOAD & LOCATION	WATTS A	WATTS B	WATTS C
1	20	1	4	LTG. - RM. #133	720		
2			8	RMS. #131, 132	1120		
3			4	#134		560	
4			4	#130		720	
5			4	#135			720
6			4	#129			720
7			4	#133	720		
8			3	#136 & OUTSIDE	500		
9			4	#135		720	
10			5	#113		800	
11			4	#135			720
12			5	#113			800
13				#127, 128 & OUTSIDE	780		
14			6	RECEPTS. 125, 126	1200		
15			4	RECEPTS. 130, 132, 133, 135		800	
16			6	RECEPTS. 125, 126		1200	
17			5	RECEPTS. 130, 132, 133, 135			1000
18			3	EXIT LIGHTS #113 & 128			150
19			5	RECEPTS. 129, 131, 134, 135	1000		
20			4	130, 132, 133	1000		
21			4	129, 131, 134, 135		800	
22			5	130, 132, 133		1000	
23			4	129, 131, 134, 135			800
24			5	130, 132, 133			1000
25				SPARE	1000		
26					1000		
27						1000	
28						1000	
29							1000
30							1000
TOTALS					9040	8600	7910
				TOTAL PANEL LOAD IN WATTS	25,550		

SCHEDULE — LIGHTING PANEL "LB"

CIR. NO.	BRKR. AMPS.	No. Poles	No. Out	TYPE LOAD & LOCATION	WATTS A	WATTS B	WATTS C
1	20	1	6	LTG. - RM. #118, 120, 122 & 129	1000		
2			5	#116	900		
3			4	#118		800	
4			5	#116		900	
5			5	#116			900
6			6	#117			1080
7			6	#116	1000		
8			4	#124	720		
9			6	#125		920	
10			4	#124		720	
11			4	#126			560
12			6	#124			900
13			1	EXIDE LITE GUARD - RM - 113	200		
14			5	#124	900		
15				SPARE		1000	
16						1000	
17							1000
18							1000
19				WATER COOLER	425		
20				RECEPT. 116, 117	300		
21				116, TO 123		1000	
22				116, 117		800	
23			5	116, TO 123			1000
24			5	116, 117			1000
25			12	FIRE ALARM	1200		
26	30	2	1	ELECT. WATER HEATER RM. 101	2000		
27	20	1	2	VENDING MACHINES		400	
28	—	—	—	PART OF CIRCUIT 26		2000	
29	20			SPARE			1000
30	20						1000
TOTALS					7145	9100	9440
				TOTAL PANEL LOAD IN WATTS	27,685		

SCHEDULE — LIGHTING PANEL "LC"

CIR. NO.	BRKR. AMPS.	No. Poles	No. Out	TYPE LOAD & LOCATION	WATTS A	WATTS B	WATTS C
1	20	1	4	LTG. - RM. #109	560		
2			4	#108	960		
3			4	#110, & 111		740	
4			4	#108		960	
5			4	#115, 116 OUTSIDE			560
6			4	#108			1080
7			4	#106	840		
8			4	#108	1080		
9			6	#104		1080	
10			—	SPARE		1000	
11			5	#105 & HALL			660
12			6	#101			1080
13			3	#112 & OUTSIDE	500		
14			6	#100 & 105	1080		
15				#115		720	
16			4	#107		480	
17			6	#113			600
18				EXIDE LITE GUARD UNIT RM. 113			200
19			4	EXIT LITES - RM - 102 & 114	250		
20			5	RECEPTS. 101, 102, 103	1000		
21			4	107, 108		800	
22			4	101, 102, 103		800	
23			5	107, 108			1000
24			5	101, 102, 103			1000
25			5	104, 105, 106	1000		
26			5	109, 110	1000		
27			6	104, 105, 106		1000	
28			6	109, 110		1200	
29				WATER COOLER			425
30				SPARE			1000
31					1000		
32					1000		
33						1000	
34						1000	
35							1000
36							1000
TOTALS					10470	10680	9945
				TOTAL PANEL LOAD IN WATTS	31,295		

SCHEDULE — LIGHTING PANEL "LD"

CIR. NO.	BRKR. AMPS.	No. Poles	No. Out	TYPE LOAD & LOCATION	WATTS A	WATTS B	WATTS C
1	30	1	1	LTS. CLUSTER RM #138E	1630		
2			1		1631		
3			1			1630	
4			1			1630	
5			1				1630
6			1				1630
7			1		1630		
8			1		1630		
9			1			1630	
10			1			1630	
11			1				1630
12			1				1630
13			2	EXIT LITES ROOM 138E	100		
14				SPARE	1000		
15						1000	
16						1000	
17							1000
18							1000
TOTALS					7620	8524	8520
				TOTAL PANEL LOAD IN WATTS	24,660		

SCHEDULE — LIGHTING PANEL "LE"

CIR. NO.	BRKR. AMPS.	No. Poles	No. Out	TYPE LOAD & LOCATION	WATTS A	WATTS B	WATTS C
1	30	1	1	LTG. CLUSTER - RM. #138 - CENTER	1880		
2			1		1880		
3			1			1880	
4			1			1880	
5			1				1880
6			1				1880
7			1		1880		
8			1		1880		
9			1			1880	
10			1			1880	
11			1				1880
12			1				1880
13	20		1	EXIDE LITE-GUARD UNIT. 137	200		
14			1	WATER COOLER	425		
15			3	EXIT LITE - ROOM #138		200	
16			3	RECEPTACLES ROOM #137		600	
17				SPARE			1000
18			3	RECEPTACLES ROOM #137			600
TOTALS					8145	8320	9120
				TOTAL PANEL LOAD IN WATTS	25,585		

SCHEDULE — LIGHTING PANEL "LF"

CIR. NO.	BRKR. AMPS.	No. Poles	No. Out	TYPE LOAD & LOCATION	WATTS A	WATTS B	WATTS C
1	30	1	1	LTG. CLUSTER - RM. 138 - W	1880		
2			1		1880		
3			1			1880	
4			1			1880	
5			1				1880
6			1				1880
7			1		1880		
8			1		1880		
9			1			1880	
10			1			1880	
11			1				1880
12			1				1880
13	20		2	LTG. & RECEPT. - RM. 202	400		
14				SPARE	1000		
15			1	1/2 H.P. FAN - E3 - RM. 202		200	
16				SPARE		1000	
17			2	1/6 HP PV-2, 1/20 HP UH-3			600
18				SPARE			[illegible]
19					1000		
20					1000		
21						1000	
22						1000	
23							1000
24							1000
TOTALS					10920	11120	11120
				TOTAL PANEL LOAD IN WATTS	33,160		

SCHEDULE — LIGHTING PANEL "LG"

CIR. NO.	BRKR. AMPS.	NO. POLES	NO. OUT	TYPE LOAD & LOCATION	WATTS A	WATTS B	WATTS C
1	30		1	LTG. CLUSTER - RM 136 E	1880		
2			1		1880		
3			1			1880	
4			1			1880	
5			1				1880
6			1				1880
7			1		1880		
8			1		1880		
9			1			1880	
10			1			1880	
11			1				1880
12			1				1880
13	20		3	RECEPTS RM - #137	600		
14			1	EXIT LITE RM - #137	50		
15			3	RECEPTS RM - #137		600	
16				SPARE		1000	
17							1000
18							1000
TOTALS					8170	9120	9520
				TOTAL PANEL LOAD IN WATTS	26,810		

SCHEDULE — LIGHTING PANEL "LH"

CIR. NO.	BRKR. AMPS.	No. Poles	No. Out	TYPE LOAD & LOCATION	WATTS A	WATTS B	WATTS C
1	30	1	1	LTG. CLUSTER RM - 137W	1880		
2			1		1880		
3			1			1880	
4			1			1880	
5			1				1880
6			1				1880
7			1		1880		
8			1		1880		
9			1			1880	
10			1			1880	
11			1				1880
12			1				1880
13	20		1	EXIDE LITE GUARD UNIT RM-136	200		
14			1	WATER COOLER	425		
15			2	EXIT LITES RM #137		100	
16			3	RECEPT. ROOM #137		600	
17				SPARE			1000
18			4	RECEPT. RM. #137			800
TOTALS					8145	8220	9320
				TOTAL PANEL LOAD IN WATTS	25,685		

SCHEDULE - POWER PANEL "PK"

CIR. NO.	BRKR. AMPS.	NO. Poles	NO. Out	TYPE LOAD & LOCATION	WATTS	WATTS	WATTS
1	20	1		RECEPTS. #124	1000		
					1000		
						1000	
						1000	
							1000
							1000
					1000		
					1000		
						1000	
						1000	
							1000
							1000
					1000		
					1000		
						1000	
						1000	
							1000
							1000
		3			1000	1000	1000
		3			1000	1000	1000
TOTALS					8000	8000	8000
				TOTAL PANEL LOAD IN WATTS	24,000		

SCHEDULE — LIGHTING PANEL "LJ"

CIR. NO.	BRKR. AMPS.	No. Poles	No. Out	TYPE LOAD & LOCATION	WATTS A	WATTS B	WATTS C
1	20	1	4	LTG. - RM - #159	1080		
2			4	RM - 160	1080		
3			4	RM - 159		1080	
4			4	RM - 160		1080	
5				RM - 155			1380
6			2	EXIT LITES RM - #138 & 158			100
7			4	#159 & OUTSIDE	1280		
8			4	#161	1200		
9			4	#160		1080	
10			4	#161		1200	
11			4	#160			1080
12			4	#161			1200
13			1	EXIDE LITE GUARD RM - #137	200		
14			6	RECPTS. RMS. #160 & 161	1200		
15				SPARE		1000	
16			6	RECEPTS. RMS. #160 & 161		1200	
17				SPARE			1000
18			6	RECEPTS. RMS. #160 & 161			1200
19				SPARE	1000		
20					1000		
21						1000	
22						1000	
23							1000
24							1000
TOTALS					8040	8640	7960
				TOTAL PANEL LOAD IN WATTS	24,640		

SCHEDULE — LIGHTING PANEL "LK"

CIR. NO.	BRKR. AMPS.	No. Poles	No. Out	TYPE LOAD & LOCATION	WATTS A	WATTS B	WATTS C
1	20	1	5	LTG. - RM - #149	1440		
2			4	#151	1440		
3			3	#149		1080	
4			3	#151		1080	
5			3	#149			1080
6			3	#151			1080
7			4	#148	1200		
8			4	#155	1200		
9			4	#148		1200	
10			4	#155		1200	
11			4	#148			1200
12			5	#152 & OUTSIDE			400
13			5	#151, 153 & 154	460		
14				SPARE	1000		
15			2	LTG. - RM - #155 & 156		200	
16				SPARE		1000	
17			6	LTG. - RM - #157			1200
18				SPARE			1000
19			4	LTG. #201	800		
20			4	LTG. #163	500		
21			3	RECEPTS. #201		600	
22			3	RECEPTS. #163		600	
23				1/8 HP UH-4, 1/6 HP E-5 & L.V. TRANSF.			700
24				1/3 HP E-2 FAN RM - #163			600
25				1/2 HP E-1, 1/60 HP UH-5 1/6 HP PV-5 L.V. TRANS.	900		
26				SPARE	1000		
27				H.W. CIR. PUMP		1000	
28				SPARE		1000	
29							1000
30							1000
TOTALS					10240	8960	10260
				TOTAL PANEL LOAD IN WATTS	29,460		

SCHEDULE — LIGHTING PANEL "LL"

CIR. NO.	BRKR. AMPS.	No. Poles	No. Out	TYPE LOAD & LOCATION	WATTS A	WATTS B	WATTS C
1	20	1	3	LTG. - RM. #142	810		
2			3	#143	1080		
3			3	#142		810	
4			3	#143		1080	
5			3	#142			810
6			3	#143			1080
7			3	#142	810		
8			3	#143	1080		
9			3	#142		810	
10			2	#143		720	
11			1	EXIDE LITE GUARD RM. 136			200
12			2	#143			720
13			5	#141	900		
14			2	#143	720		
15			5	#141		900	
16			2	#143		720	
17			4	#140			1120
18			5	#144			1230
19			3	#139	560		
20			4	#144	960		
21			4	#140		1120	
22			5	#144		1230	
23			2	EXIT LIGHT ROOMS #139 & 143			100
24			3	LTG. ROOM #144			810
25				SPARE	1000		
26			3	LTG. ROOM #144	810		
27				SPARE		1000	
28			3	LTG. ROOM #145		1080	
29				SPARE			1000
30			3	LTG. ROOM #145			1080
31				SPARE	1000		
32					1000		
TOTALS					10,730	9470	8150
				TOTAL PANEL LOAD IN WATTS	28,350		

SCHEDULE — LIGHTING PANEL "LMA"

CIR. NO.	BRKR. AMPS.	No. Poles	No. Out	TYPE LOAD & LOCATION	WATTS A	WATTS B	WATTS C
1	20	1	1	FLOODLIGHTS SOUTH	1000		
2			1		1000		
3			1			1000	
4			1			1000	
5			1				1000
6			1				1000
7			1		1000		
8				CONTACTOR	500		
9			1	FLOODLIGHTS SOUTH		1000	
10			1			1000	
11			1	FLOODLIGHTS SOUTH			1000
12				SPARE			1000
TOTALS					3500	4000	4000
				TOTAL PANEL LOAD IN WATTS	11,500		

SIZE-3, 3-POLE CONTACTOR WITH 120V. COIL

SCHEDULE — LIGHTING PANEL "LMB"

CIR. NO.	BRKR. AMPS.	No. Poles	No. Out	TYPE LOAD & LOCATION	WATTS A	WATTS B	WATTS C
1	20		1	FLOODLIGHTS NORTH	1000		
2			1		1000		
3			1			1000	
4			1			1000	
5			1				1000
6			1				1000
7			1		1000		
8				SPARE	1000		
9			1	FLOODLIGHTS NORTH		1000	
10				SPARE		1000	
11			1	FLOODLIGHTS NORTH			1000
12				SPARE			1000
TOTALS					4000	4000	4000
				TOTAL PANEL LOAD IN WATTS	12,000		

SIZE-3 3-POLE CONTACTOR WITH 120 V. COIL

REVISION	DATE	DESCRIPTION	BY	BY	BY
	MAR. '60	REV. AS BUILT, CONTRACT DA-01-075-ENG-3650, RESIDENT [illegible]			
(A)	29 OCT. 58	ADD CIR. FOR P-101 TO PAN "LK"			

THE RALPH M. PARSONS COMPANY
ARCHITECTS - ENGINEERS
617 SOUTH OLIVE STREET
LOS ANGELES, CALIFORNIA

CORPS OF ENGINEERS
U. S. ARMY
OFFICE OF THE DISTRICT ENGINEER
MOBILE, ALABAMA

DRAWN BY: JOHN J. CLARK
TRACED BY:
CHECKED BY: EFM MCM
SUBMITTED BY: [signature]

U. S. ARMY ORDNANCE CORPS — REDSTONE ARSENAL — HUNTSVILLE, ALA.
ARMY BALLISTIC MISSILE AGENCY

STRUCTURES AND MECHANICS BUILDING

LINE ITEM NO. A-803-803.120

ELECTRICAL

STRUCTURES AND MECHANICS UNIT
LIGHTING PANEL SCHEDULE

APPROVED: [signature] CHIEF, DESIGN BRANCH
APPROVED: [signature] CHIEF, ENGINEERING DIVISION
DATE: OCTOBER, 1956

APPROVED: FOR THE D.E. [signature]
LT. COL., CORPS OF ENGINEERS, ASST. DISTRICT ENGINEER
DATE: OCTOBER, 1956

SCALE: NONE
FILE NO. RED-6781
PE: 4619
DRAWING NO. 60-09-03
SHEET 69 OF 70

E12

RED-6781
PE-4622

E12 13

MSFC MASTER BID DISK 11-18-2013

CORPS OF ENGINEERS

U. S. ARMY

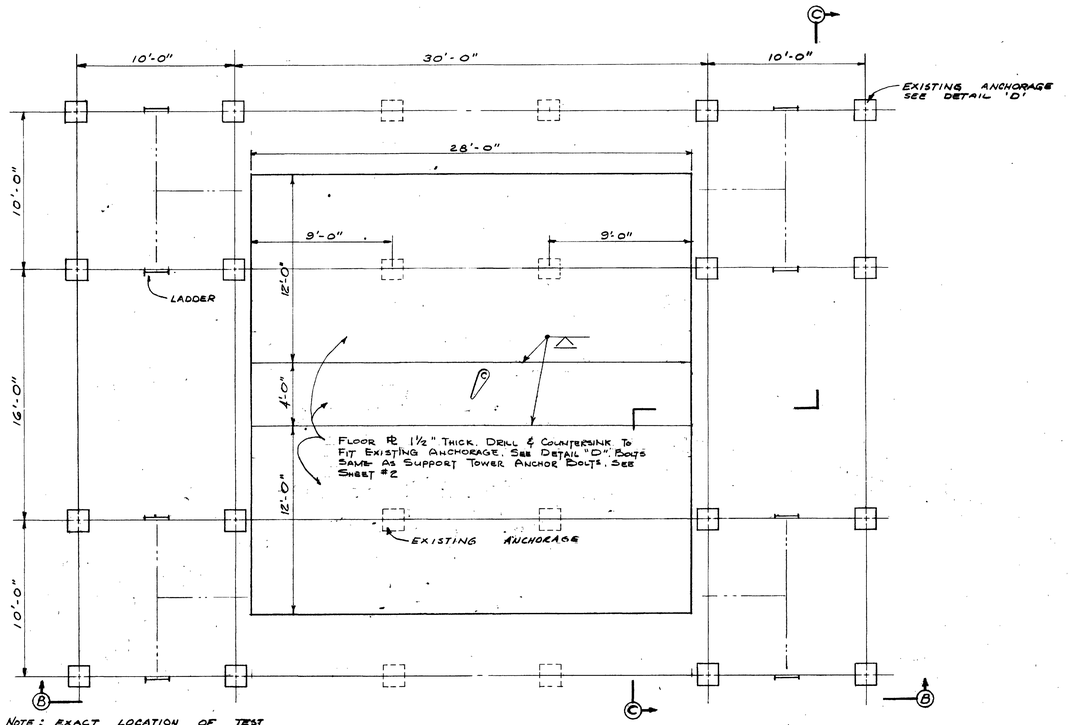

NOTE: EXACT LOCATION OF TEST FACILITY TO BE AS DIRECTED BY CONTRACTING OFFICER.

ALL EXISTING DIMENSIONS SHALL BE VERIFIED AT THE SITE.

LAYOUT PLAN

SCALE ~ ¼" = 1'-0"

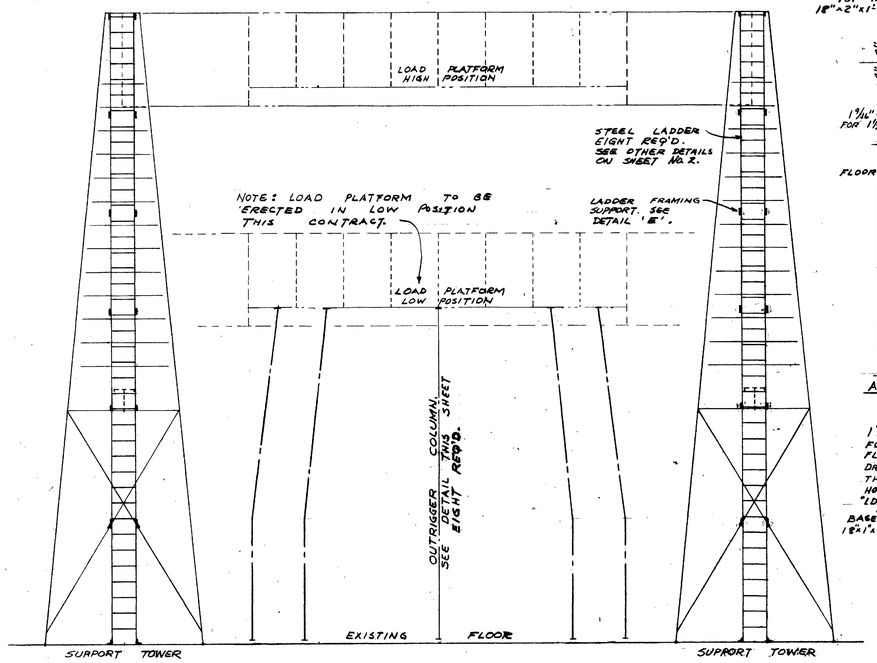

ELEVATION B-B

SCALE ~ ¼" = 1'-0"

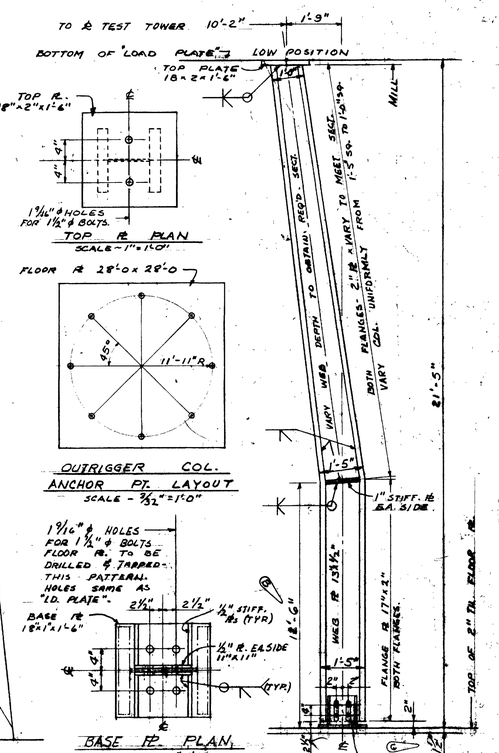

OUTRIGGER COLUMN

8 REQ'D

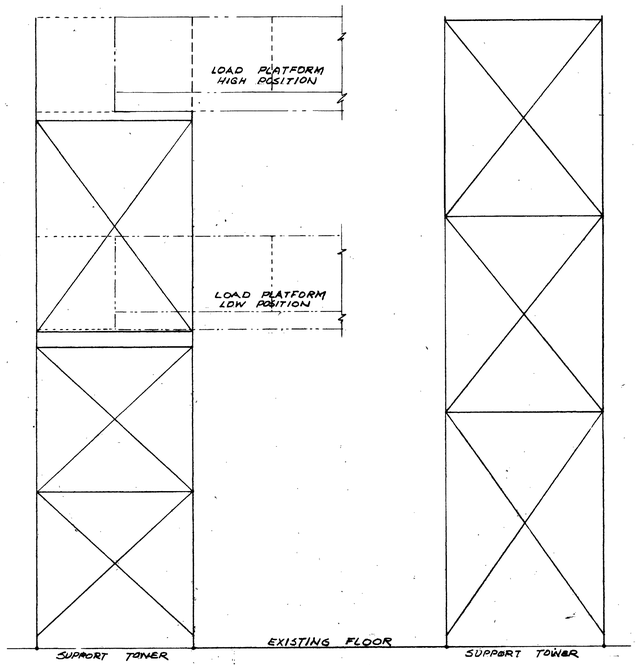

SECTION C-C

SCALE ~ ⅛" = 1'-0"

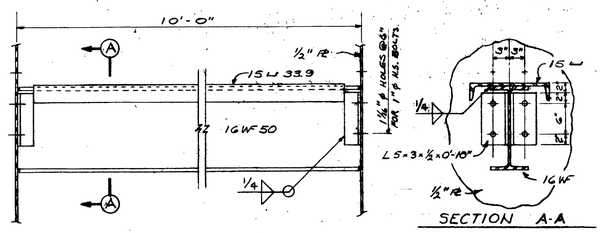

JACKING BEAM

SCALE ~ 1" = 1'-0"

4 REQ'D.

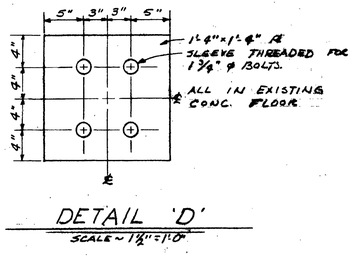

DETAIL 'D'

SCALE ~ 1½" = 1'-0"

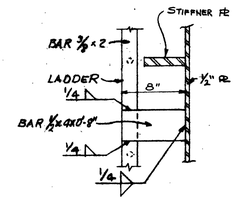

DETAIL 'E'

SCALE ~ 1½" = 1'-0"

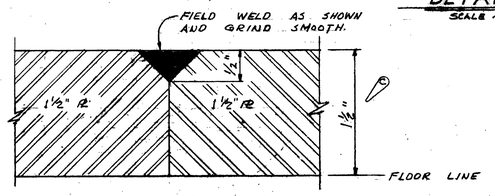

SECTION F-F

N.T.S.

LOADING CONDITIONS

I. VERTICAL
- A. TOTAL - 3,000,000 LBS. UPWARD.
- B. INDIVIDUAL LOAD - 300,000 LBS. DISTRIBUTED OVER AN AREA NOT LESS THAN THAT OF AN 18" DIAMETER CIRCLE.

II HORIZONTAL
- A. TOTAL - 300,000 LBS IN ANY DIRECTION THROUGH LOAD PLATFORM.
- B. INDIVIDUAL LOAD - 75,000 LBS. AT EL. 15.0 TO EACH SUPPORT TOWER.

III GENERAL
- A. SHEAR IN ANY MEMBER OF THE LOAD PLATFORM OTHER THAN BUILT-UP GIRDERS SHALL NOT EXCEED 300,000 LBS.
- B. TOTAL VERTICAL LOAD SHALL BE DISTRIBUTED SO AS NOT TO EXCEED 750,000 LBS. TO ANY SUPPORT TOWER.

DESIGN STRESSES

I STRUCTURAL STEEL A-7
- A. TENSION AND BENDING - 20,000 PSI
- B. COMPRESSION - 17,000 - .485(L/r)²
- C. SHEAR - 13,000 PSI

II COR-TEN STEEL OR EQUAL
- A. TENSION AND BENDING - 27,000 PSI
- B. SHEAR
  - 1. PLATE ○ ¾" TH. - 15,000 PSI
  - 2. PLATE ¾" - 1¼" TH. - 14,000 PSI
  - 3. PLATE OVER 1¼" TH. - 12,000 PSI

INFORMATION FOR USING AGENCY
PLATFORM JACKING DATA

1. PLATFORM MUST BE MAINTAINED LEVEL AT ALL TIMES.
2. A MINIMUM OF 4 BOLTS AT EACH CONNECTION MUST BE TIGHT TO SUPPORT THE DEAD WEIGHT OF THE LOAD PLATFORM.
3. JACKS AT EACH SUPPORT TOWER MUST HAVE A MINIMUM CAPACITY OF 25 TONS. JACKS NOT IN CONTRACT.

GENERAL NOTES

1. THE WEB PL OF ALL GIRDERS WITH THE EXCEPTION OF THE CENTER 22'-0" OF ONE GIRDER G3 SHALL BE COR-TEN STEEL OR EQUAL & OF THE THICKNESS SHOWN IN THE PLANS.
2. ALL ROLLED SECTIONS, STIFFENER PLATES, AND MEMBERS NOT OTHERWISE SPECIFIED SHALL BE A-7 STEEL.
3. ALL BOLTS USED IN FABRICATION AND ERECTION SHALL BE HIGH STRENGTH BOLTS.
4. ALL FABRICATION SHALL CONFORM TO THE LATEST AISC SPECIFICATIONS.
5. ALL WELDING SHALL CONFORM TO THE LATEST AWS SPECIFICATIONS.

REVISION	DATE	DESCRIPTION	BY	BY	BY
(A)	18 Nov 1959	REVISED OUTRIGGER COLUMN.			
(B)	26 May 1959	REVISED OUTRIGGER COL. & FLOOR PL. DIMENSIONS			
(C)	Oct '59	REVISED THICKNESS OF FLOOR PL & GENERAL NOTE #1			
	NOV '60	REV. AS BUILT, CONTRACT DA-01-076-ENG-5878, REDSTONE ARSENAL			

F-579

CORPS OF ENGINEERS, U. S. ARMY
OFFICE OF THE DISTRICT ENGINEER
MOBILE, ALA.

DRAWN BY: J.W.C.
TRACED BY:
CHECKED BY:
APPROVED:
APPROVED:
APPROVED:

REDSTONE ARSENAL
HUNTSVILLE, ALABAMA

STRUCTURAL STEEL TEST TOWER - BLDG. 4619
GENERAL LAYOUT & DETAILS

APPROVED: DATE:

SCALE AS SHOWN
FILE NO.
SPEC. NO.
DRG. NO. 4619-S-7

MSFC MASTER BID DISK 11-18-2013

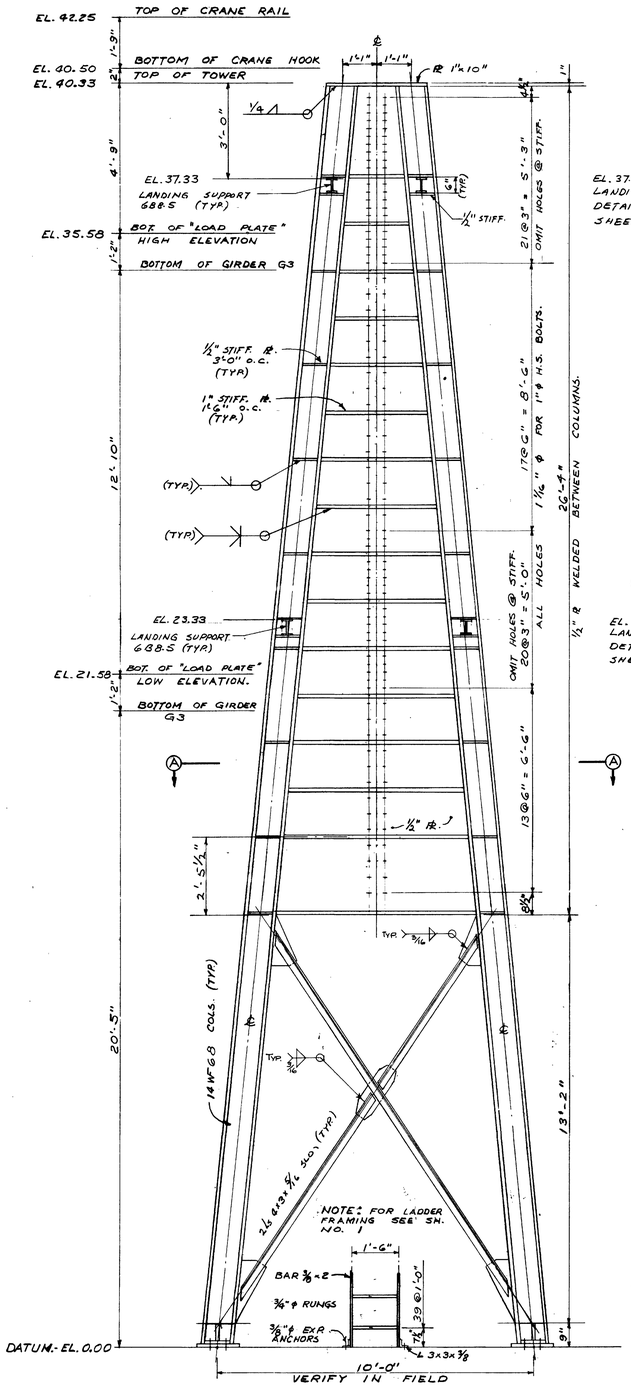

SIDE ELEVATION

SCALE ~ 1/2" = 1'-0"

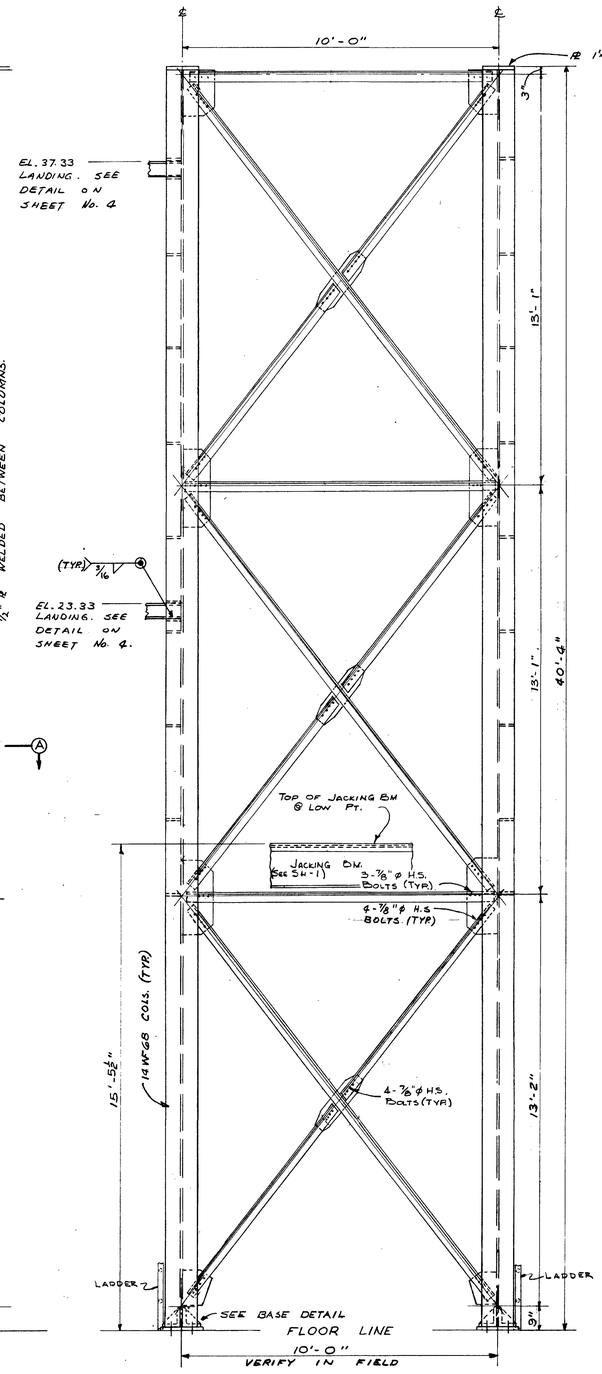

REAR ELEVATION

SCALE ~ 1/2" = 1'-0"

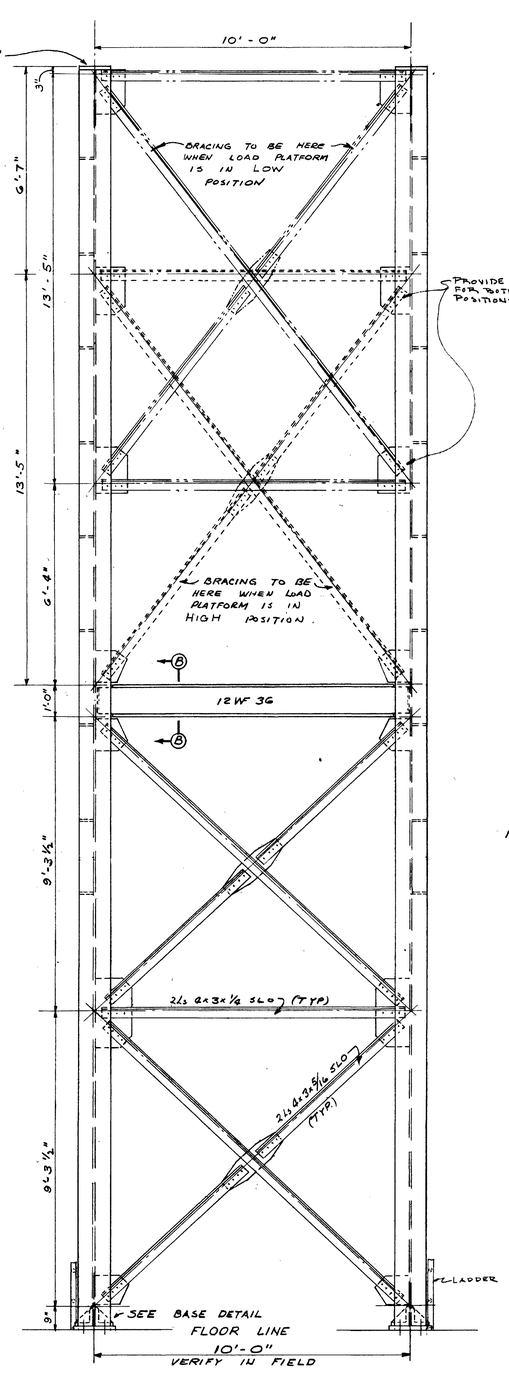

FRONT ELEVATION

SCALE ~ 1/2" = 1'-0"

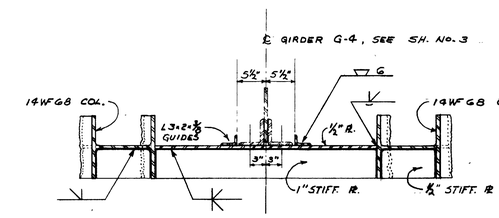

SECTION A-A

SCALE ~ 1"=1'-0"

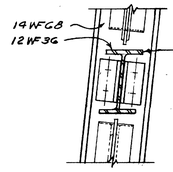

SECTION B-B

SCALE ~ 1"=1'-0"

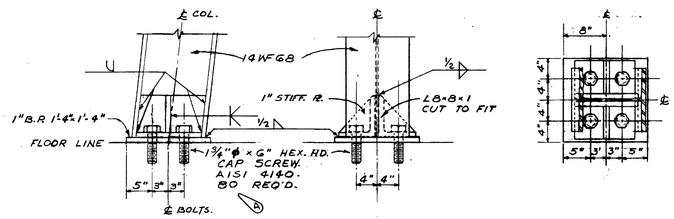

COLUMN BASE DETAILS

SCALE ~ 1"=1'-0"

NOTES

1. ANCHORAGE FOR 1 3/4" ø CAP SCREWS AND ALL ELSE BELOW FLOOR LINE IS EXISTING UNLESS NOTED OTHERWISE.
2. ALL HORIZONTAL BRACING SHALL BE 2 L's 6x3x1/2 S.L.O. UNLESS NOTED OTHERWISE.
3. ALL DIAGONAL CROSS BRACING SHALL BE 2 L's 6x3x5/16 S.L.O. UNLESS NOTED OTHERWISE.
4. ALL GUSSET PLATES 1/2" THICK.
5. ALL TOWER BRACING BOLTS SHALL BE 7/8" ø H.S. UNLESS OTHERWISE NOTED.
6. SUPPORT TOWERS COMPLETE - FOUR REQ'D.
7. LADDERS - EIGHT REQ'D - SEE SHEET NO. 1 FOR LOCATIONS.
8. LANDINGS TO BE FURNISHED FOR ONE TOWER ONLY - SEE SHEET NO. 5 FOR LOCATION.

REVISION	DATE	DESCRIPTION	BY	BY	BY
	NOV. 60	REV. AS BUILT, CONTRACT DA-01-076-ENG-[illegible]; RESIDENT ENGINEER			
F-409 A	6 JUN 59	REVISED THE NUMBER OF 1 3/4" ø CAP SCREWS REQUIRED.			

CORPS OF ENGINEERS, U. S. ARMY
OFFICE OF THE DISTRICT ENGINEER
MOBILE, ALA.

DRAWN BY: J.M.C.
TRACED BY:
CHECKED BY:
SUBMITTED BY: CHIEF, DESIGN SECT.
APPROVED: CHIEF, DESIGN BRANCH
APPROVED: CHIEF, ENGINEERING DIVISION
APPROVED: COLONEL - CORPS OF ENGINEERS - DISTRICT ENGR.
DATE: MAY 1959

REDSTONE ARSENAL
HUNTSVILLE, ALABAMA
STRUCTURAL STEEL TEST TOWER - BLDG. 4619
SUPPORT TOWERS - FRAMING & DETAILS

APPROVED: DATE: MAY 1959
SCALE: AS SHOWN
SPEC. NO.
FILE NO. RED-10522
DRAWING NO. FE 4619
SHEET 7 OF 9

35-59-07
Sh 2 of 4

MSFC MASTER BID DISK 11-18-2013

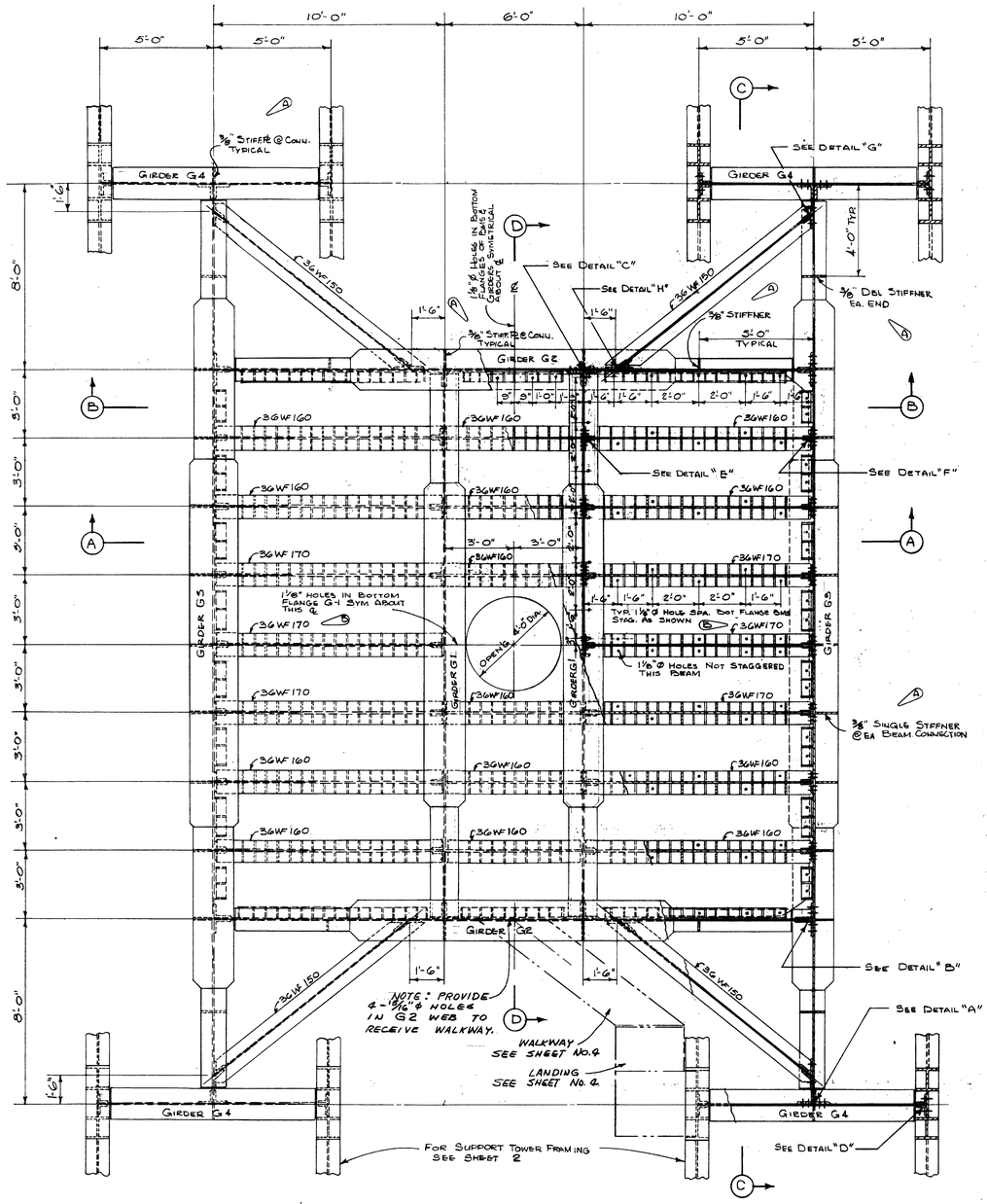

LOADING PLATFORM FRAMING PLAN
SCALE: 3/8"=1'-0" (A)

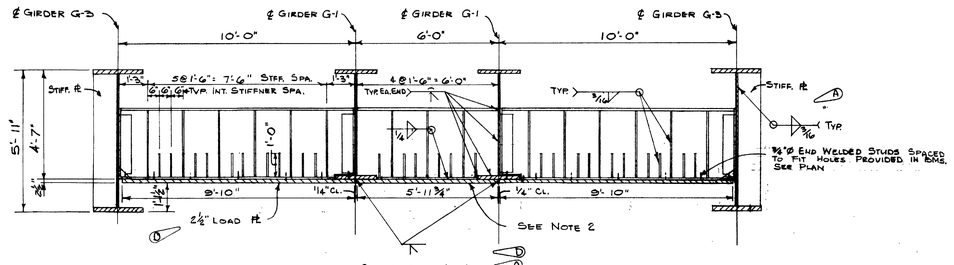

SECTION A-A
SCALE: 3/8"=1'-0"

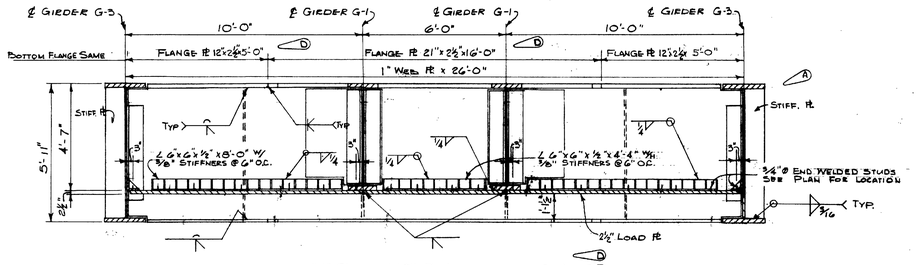

SECTION B-B (ELEVATION OF G-2)
SCALE: 3/8"=1'-0"

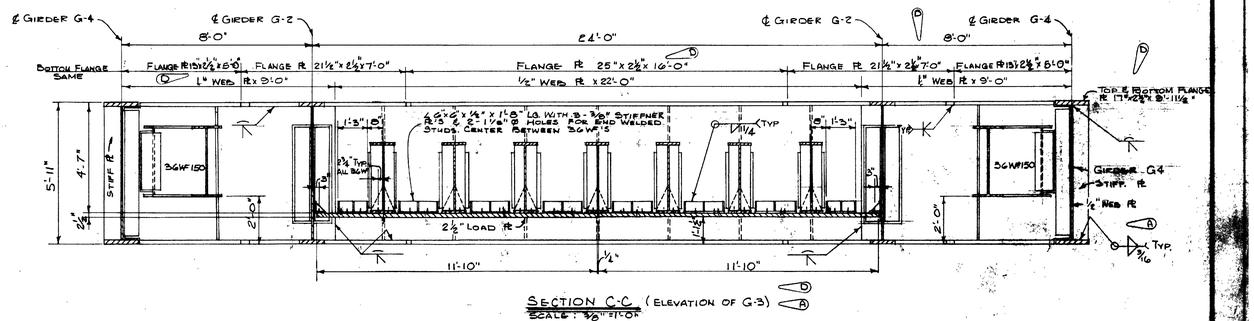

SECTION C-C (ELEVATION OF G-3)
SCALE: 3/8"=1'-0"

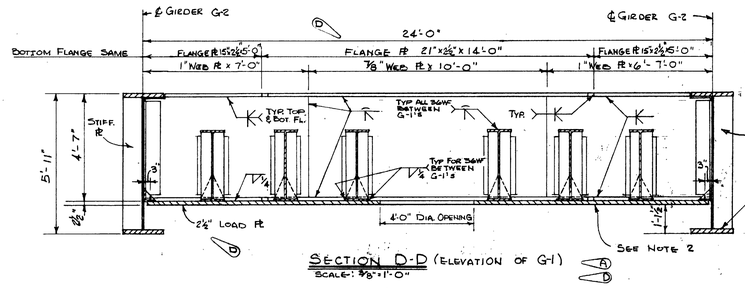

SECTION D-D (ELEVATION OF G-1)
SCALE: 3/8"=1'-0"

NOTES

1. ALL STIFFNER PLATES 3/8" THICK.
2. GIRDERS G-1, 36 WF'S BETWEEN & THE 2 1/2" LOAD PLATE BELOW ARE TO BE SHOP WELDED AS SHOWN INTO ONE LIFTING UNIT.
3. SEE SHEET 4 FOR DOUBLER PLATE SIZE & CONNECTIONS.
4. SEE SHEET 1 FOR GENERAL NOTES.

REVISION	DATE	DESCRIPTION	BY	BY	BY
	NOV. '60	REV. — AS BUILT, CONTRACT DA-01-076-ENG-5576, RESIDENT ENGINEER			
F-5179 (D)	Oct '59	REVISED GIRDER FLANGE PL, WEB PL & LOAD PL THICKNESS			
F-4069 (C)	6 July '59	CHANGED FLANGE PL LENGTH			
(B)	26 May '59	REVISED BEAM SIZES			
(A)	18 May 1959	ADDED WEB STIFFNERS TO GIRDERS			

CORPS OF ENGINEERS, U. S. ARMY
OFFICE OF THE DISTRICT ENGINEER
MOBILE, ALA.

DRAWN BY: AJR	REDSTONE ARSENAL HUNTSVILLE ALABAMA STRUCTURAL STEEL TEST TOWER- BLDG. 4619 LOAD PLATFORM FRAMING & DETAILS
TRACED BY:	
CHECKED BY:	
SUBMITTED BY: Chief Struct. Sect.	APPROVED: DATE: May 1959
APPROVED: Chief, Design Branch	Chief, Engineering Division
APPROVED: Col. Corps of Engineers, District Engineer DATE: May 1959	SCALE: As Shown FILE NO. RED-10523 SPEC. NO. DRAWING NO. ENG FORM 4619 SHEET NO. 3 OF 4 SHEETS

MSEC MASTER BID DISK 11-18-2013

35-59-07
Sh. 3 of 4

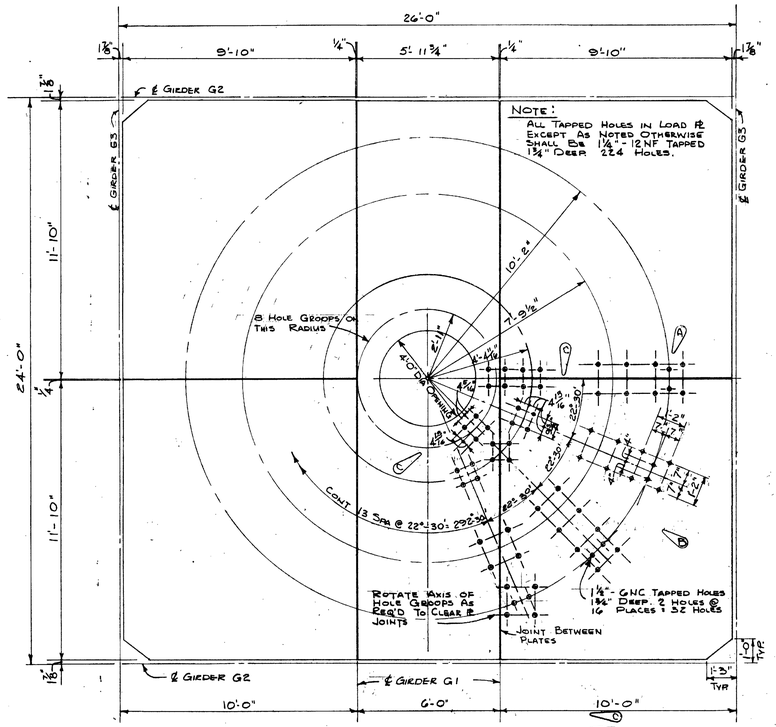

BOTTOM PLAN OF 2 1/2" LOAD PLATE
SCALE: 3/8" = 1'-0"

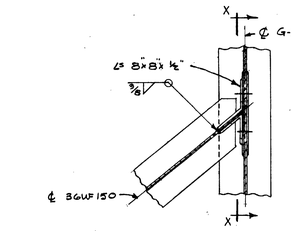

PLAN

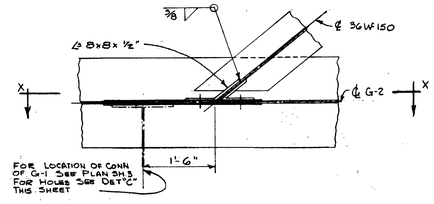

PLAN

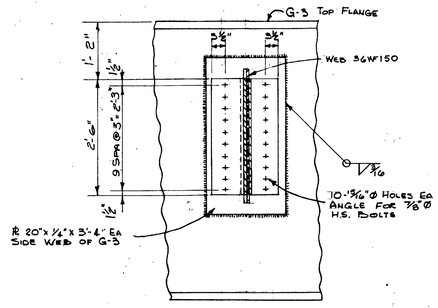

X-X

DETAIL "G"
SCALE: 3/4"=1'-0"

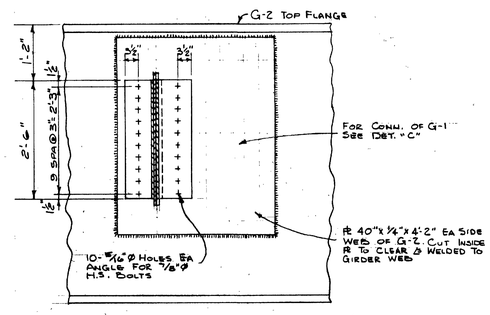

X-X

DETAIL "H"
SCALE: 3/4"=1'-0"

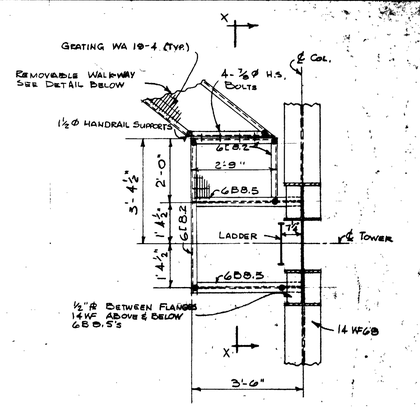

PLAN

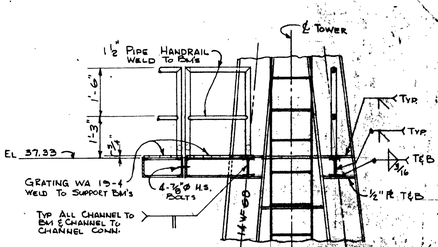

SECTION X-X

DETAIL OF LANDING @ EL 37.33
SCALE: ½"=1'-0"

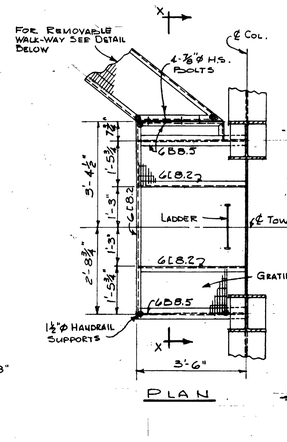

PLAN

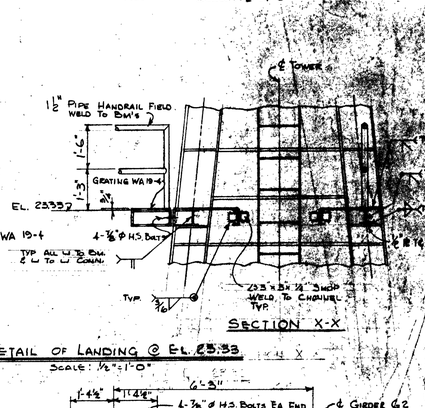

SECTION X-X

DETAIL OF LANDING @ EL 23.33
SCALE: ½"=1'-0"

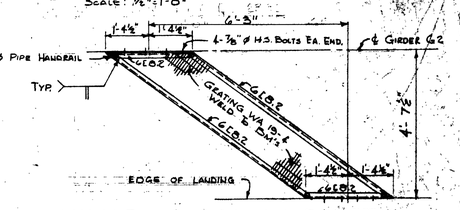

REMOVABLE WALK-WAY DETAIL
SCALE: ½"=1'-0"

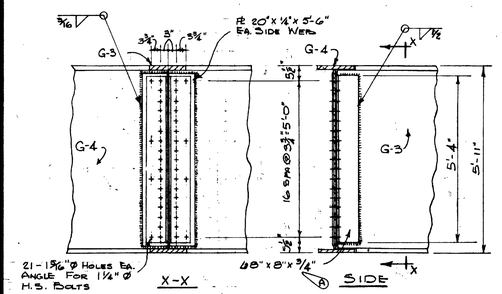

DETAIL "B"
SCALE: ½"=1'-0"

DETAIL "A"
SCALE: ½"=1'-0"

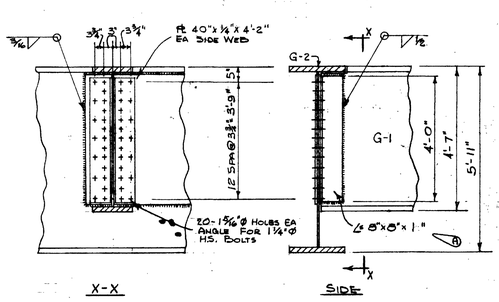

DETAIL "C"
SCALE: ½"=1'-0"

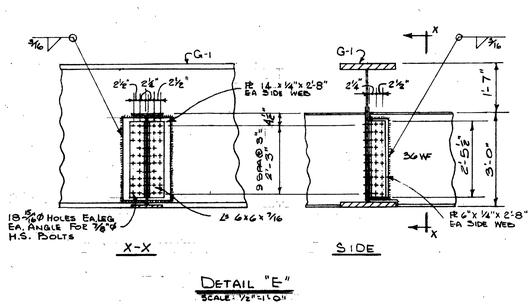

DETAIL "E"
SCALE: ½"=1'-0"

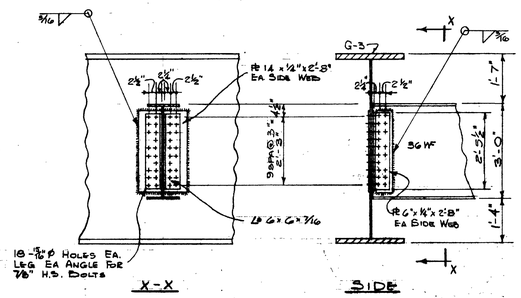

DETAIL "F"
SCALE: ½"=1'-0"

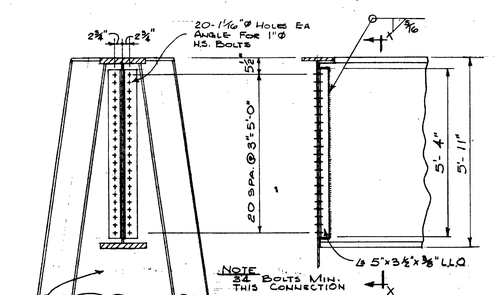

DETAIL "D"
SCALE: ½"=1'-0"

F-579	C	Oct 59	Revised Spa. of Tapped Holes in Load Pl. & Load Pl. Thickness
F-981	B	6 July 59	Revised Layout of Tapped Holes in 2" Load Pl.
	A	18 Mar 59	Revised Connections & Added Tapped Holes in 2" Load Pl.
SYMB	DATE		DESCRIPTION

CORPS OF ENGINEERS, U. S. ARMY
OFFICE OF THE DISTRICT ENGINEER
MOBILE, ALA.

DRAWN BY: AJR
TRACED BY:
CHECKED BY:
SUBMITTED BY: CHIEF, ENGR. BRANCH
APPROVED: CHIEF, DESIGN SECTION

REDSTONE ARSENAL
HUNTSVILLE, ALABAMA
STRUCTURAL STEEL TEST TOWER - BLDG. NO. 4619
DETAILS

APPROVED: CHIEF, ENGINEERING DIVISION
DATE: MAY 1959

APPROVED: FOR CHIEF OF ENGINEERS, DISTRICT ENGINEER
DATE: MAY 1959

SCALE: AS SHOWN
FILE NO. RED-10524
SPEC. NO.
DRAWING NO. 57-57-07
57-57-07
4-4-64

NOV 59 | REVISED AS BUILT, CONTRACT DA-01-026-ENG-6726, RESIDENT ENGINEER'S OFFICE

MSEC MASTER BID DISK 11-18-2013

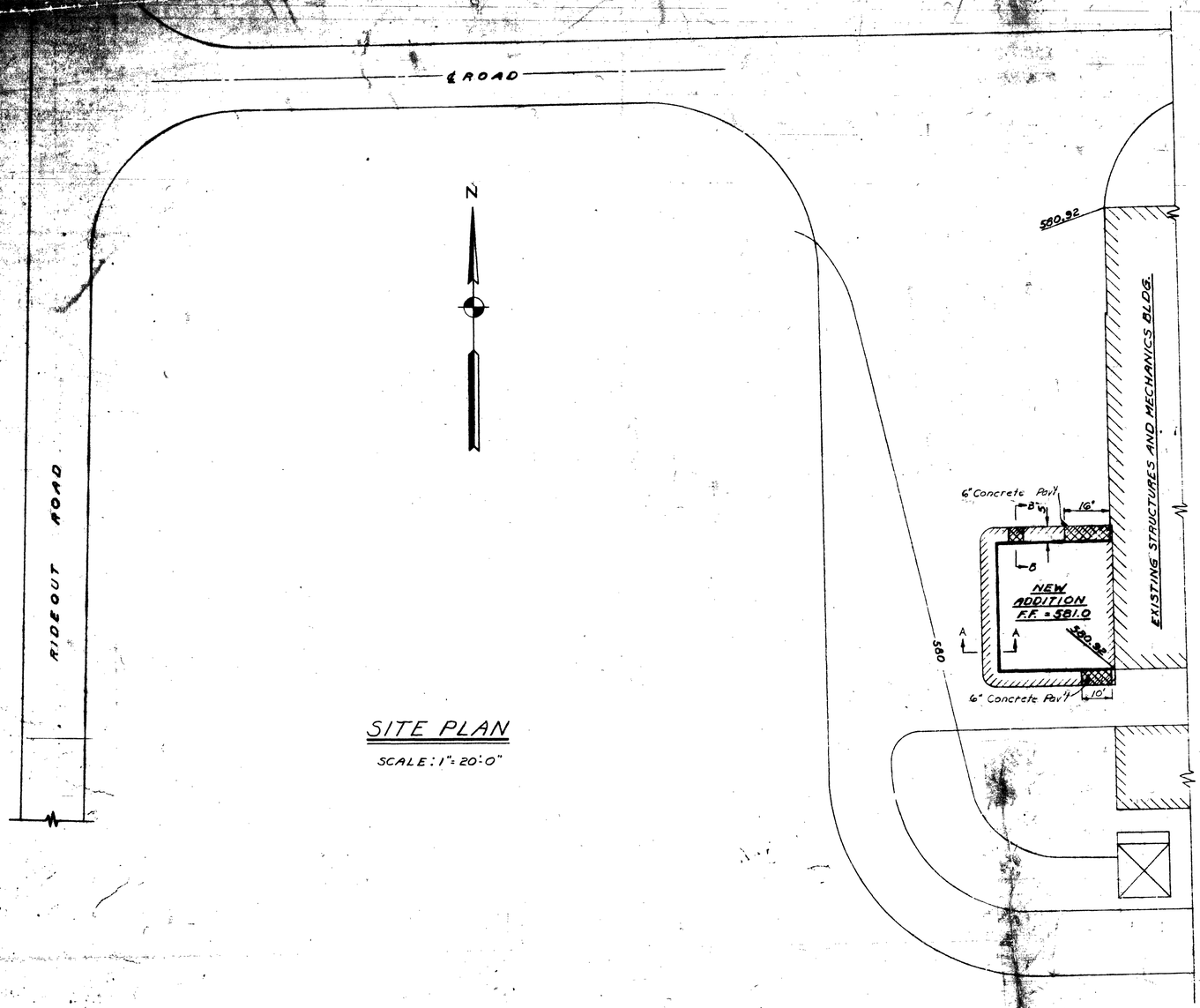

SITE PLAN

SCALE: 1" = 20'-0"

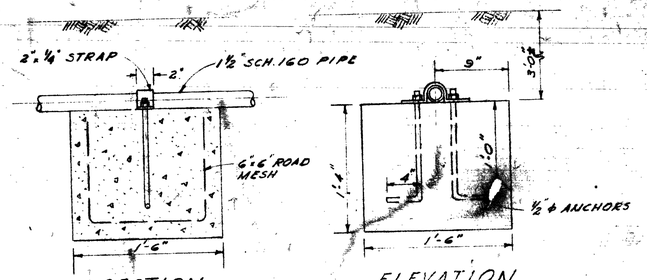

SECTION ELEVATION

HIGH PRESSURE AIR LINE ANCHOR

SCALE: 1½" = 1'-0"

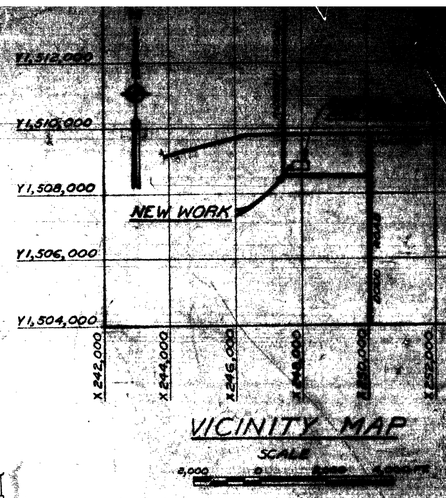

VICINITY MAP

SCALE

2,000

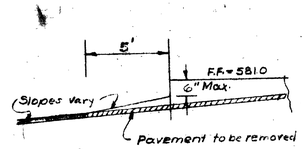

SECTION A-A

NO SCALE

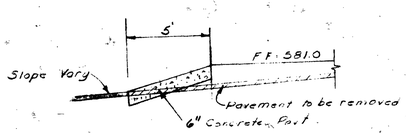

SECTION B-B

NOT TO SCALE

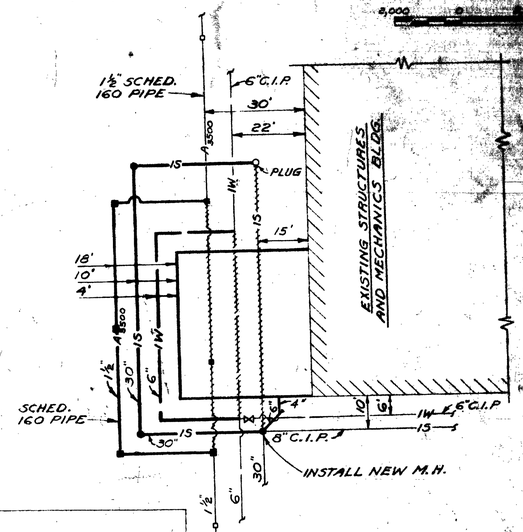

UTILITY PLAN

SCALE: 1" = 20'-0"

DRAWING INDEX

M.D.O. FILE NO.	DRAWING NO.	SHEET NO.	TITLE
RED-112205	60-09-15	1	SITE AND UTILITY PLAN
RED-112206	60-09-15	2	FLOOR PLAN & DETAILS
RED-112207	60-09-15	3	ELEVATIONS & DETAILS
RED-112208	60-09-15	4	FOUNDATION & FLOOR PLANS
RED-112209	60-09-15	5	ROOF PLAN & DETAILS
RED-112210	60-09-15	6	HEATING, AIR CONDITIONING, PIPING
RED-112211	60-09-15	7	HEATING, AIR CONDITIONING, PIPING
RED-112212	60-09-15	8	SINGLE LINE DIAGRAM
RED-112213	60-09-15	9	ELECTRICAL PLAN
RED-112214	60-09-15	10	ELECTRICAL PLAN
STANDARD DRAWINGS			
STD-614	40-07-01		WATER DISTRIBUTION, GAS DISTRIBUTION, & SANITARY SEWERS

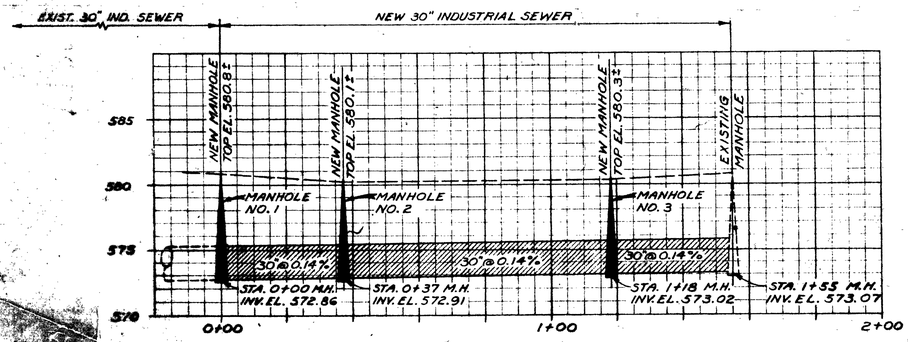

PROFILE - NEW 30" INDUSTRIAL SEWER

SCALE: HORIZONTAL - 1" = 20'
VERTICAL - 1" = 5'

LEGEND

- M.H. 15 — EXISTING INDUSTRIAL SEWER - TO REMAIN
- M.H. 15 ····· EXISTING INDUSTRIAL SEWER - TO BE REMOVED
- M.H. 15 — NEW INDUSTRIAL SEWER
- VALVE 1W — EXISTING INDUSTRIAL WATER LINE - TO REMAIN
- VALVE 1W ····· EXISTING INDUSTRIAL WATER LINE - TO BE REMOVED
- VALVE 1W — NEW INDUSTRIAL WATER LINE
- AIR BLOCK A 3500 — EXISTING 3500 P.S.I. AIR LINE - TO REMAIN
- AIR BLOCK A 3500 ····· EXISTING 3500 P.S.I. AIR LINE - TO BE REMOVED
- AIR BLOCK A 3500 — NEW 3500 P.S.I. AIR LINE
- EXISTING PAVEMENT TO BE REMOVED
- NEW CONCRETE PAVEMENT

DATE	REVISIONS
JULY 61	REV. AS BUILT CONTRACT DA-01-076-ENG-6004

DESCRIPTION

CORPS OF ENGINEERS, U. S. ARMY
OFFICE OF THE DISTRICT ENGINEER
MOBILE, ALA.

DRAWN BY: W.P.R.
TRACED BY:
CHECKED BY: W.T.G.
SUBMITTED BY:

U.S. ARMY ORDNANCE CORPS-REDSTONE ARSENAL
ARMY BALLISTIC MISSILE AGENCY

ADDITION TO STRUCTURES, MECHANICS BUILDING FOR VIBRATION EXCITER FACILITY

SITE AND UTILITY PLAN

MSFC MASTER BID DISK 11-18-2013

CORPS OF ENGINEERS

U. S. ARMY

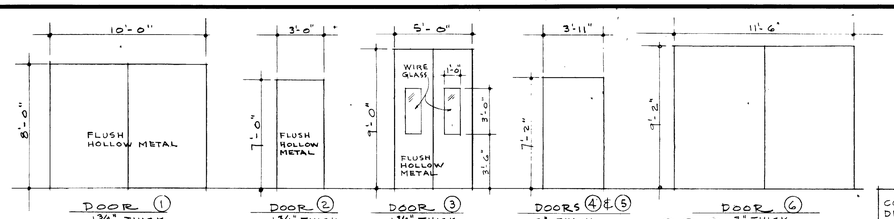

DOOR SCHEDULE

SCALE: ¼" = 1'-0"

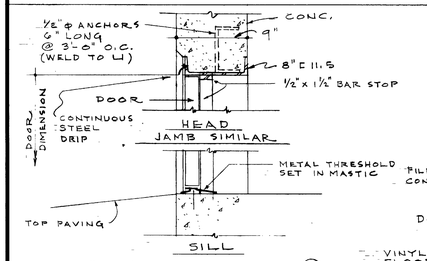

DETAILS DOOR ①

1½" = 1'-0"

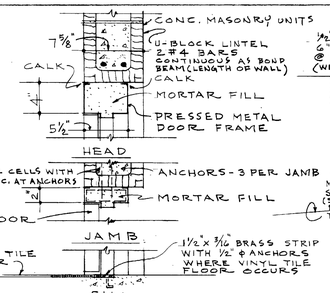

DETAILS DOOR ②

1½" = 1'-0"

NOTE: SILL DETAIL CUT WHERE PIPE TRENCH DOES NOT OCCUR

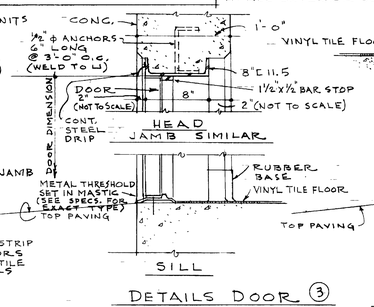

DETAILS DOOR ③

1½" = 1'-0"

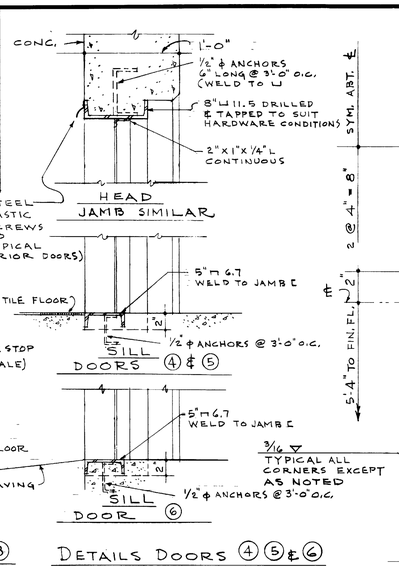

DETAILS DOORS ④ ⑤ & ⑥

1½" = 1'-0"

OPENING DIMENSIONS TO BE DETERMINED BY DIMENSIONS OF DOORS FURNISHED BY GOVERNMENT.

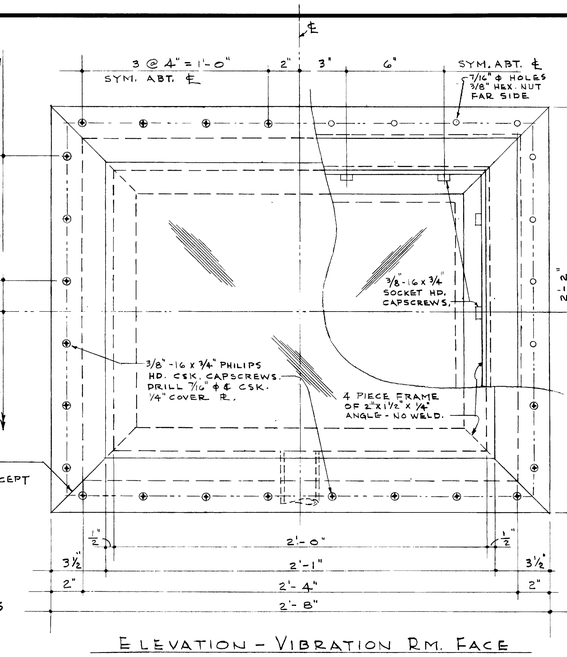

ELEVATION - VIBRATION RM. FACE

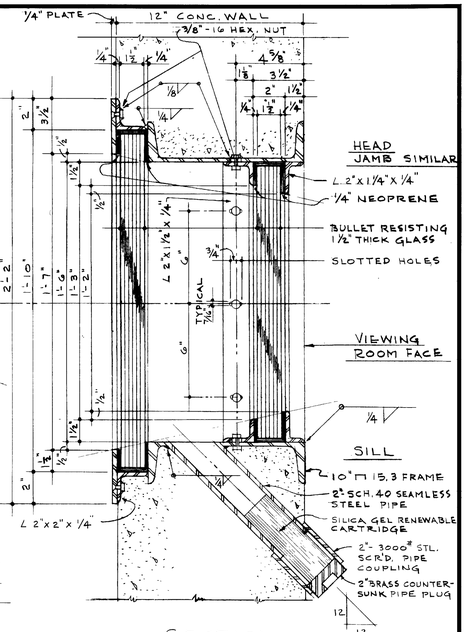

SECTION

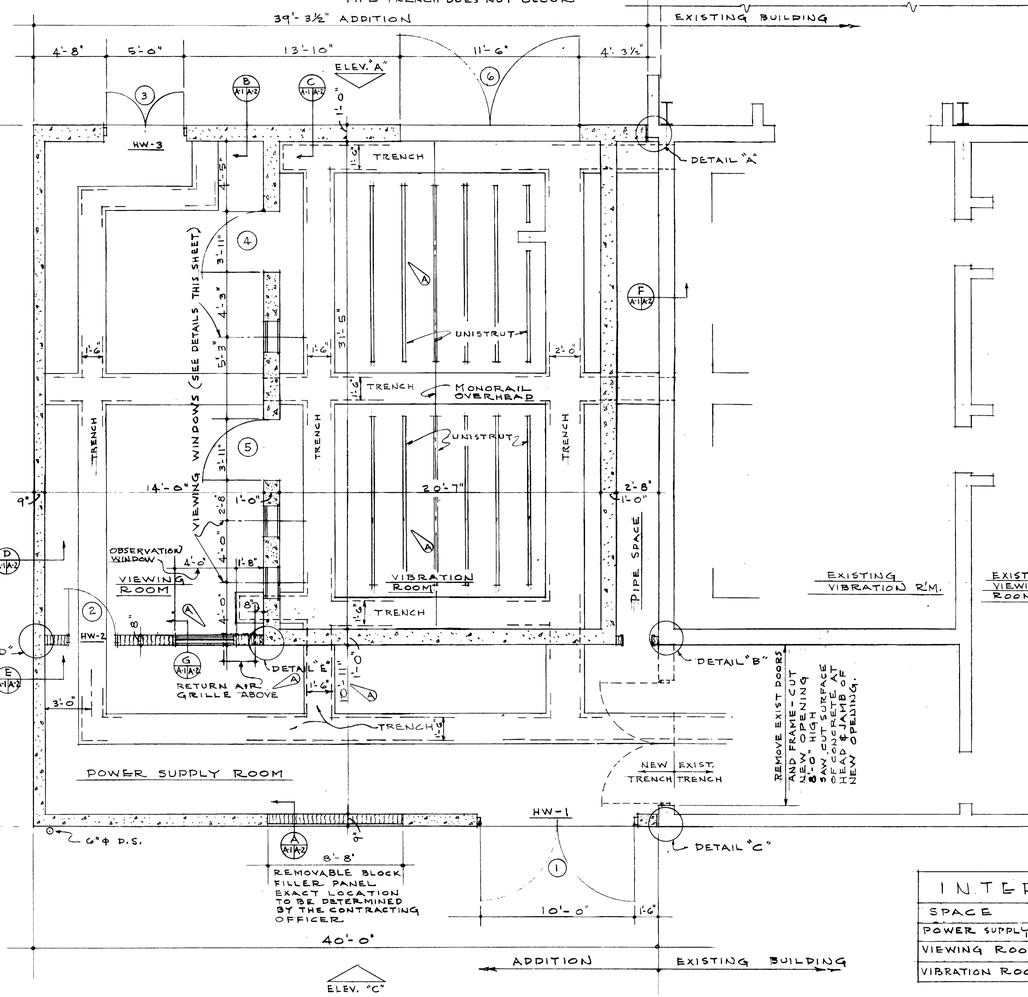

FLOOR PLAN

¼" = 1'-0"

NOTE: AT ALL DUCT, GRILLE & OTHER OPENINGS IN CONCRETE MASONRY UNIT WALLS, PROVIDE 8" DEEP U-BLOCK LINTELS WITH 2 #4 BARS IN BOTTOM.

DETAILS OF VIEWING WINDOWS

SCALE: 3" = 1'-0"

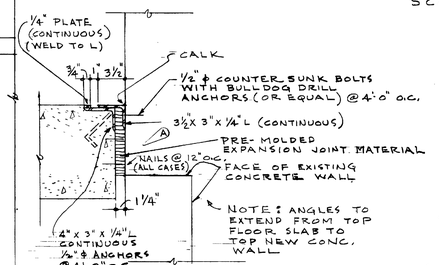

DETAIL "A"

1½" = 1'-0"

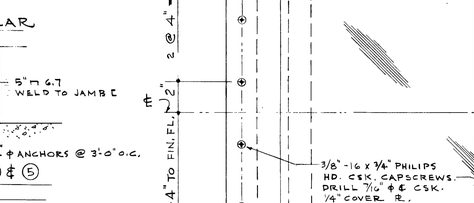

DETAIL "B"

1½" = 1'-0"

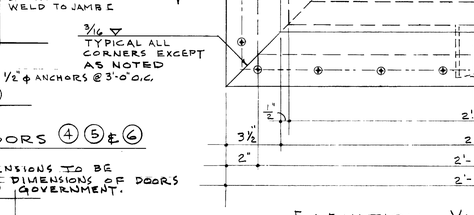

DETAIL "C"

1½" = 1'-0"

NOTE: ANGLES TO EXTEND FROM TOP FLOOR SLAB TO TOP ROOF SLAB

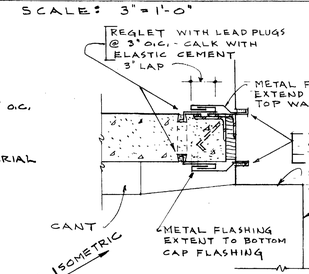

DETAIL "A" ABOVE ROOF

1½" = 1'-0"

NOTE EXTEND FLASHING AS SHOWN ACROSS TOP PARAPET WALL

DETAIL "D"

1½" = 1'-0"

DETAIL "E" SIMILAR

ISOMETRIC OF DETAIL "A" ABOVE ROOF

NO SCALE

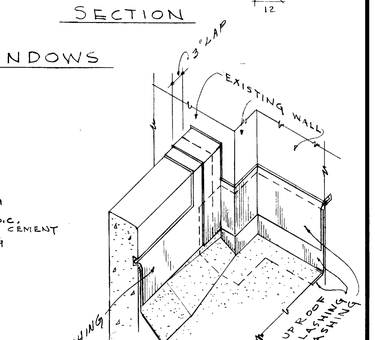

DETAILS OF OBSERVATION WINDOW BETWEEN VIEWING ROOM & POWER SUPPLY ROOM - 1½" = 1'-0"

INTERIOR FINISH SCHEDULE

SPACE	FLOOR	BASE	WALL	CEILING	REMARKS
POWER SUPPLY RM.	CONC.	—	CONC. & CONC. BLOCK	CONC.	
VIEWING ROOM	VINYL TILE	RUBBER	CONC. & CONC. BLOCK	ACOUSTICAL TILE	CEILING HT. 10'-0"
VIBRATION ROOM	CONC.	—	CONC.	CONC.	

SECTION — ARCH. SHEET NO. SECTION IS CUT ON — ARCH. SHEET NO. SECTION IS DRAWN ON

KEY TO SECTION SYMBOL

REVISION	DATE	DESCRIPTION	BY	BY	BY
	JULY 61	REV. AS BUILT, CONTRACT DA-01-076-ENG-4505; RESIDENT ENG			
A	17 JUN. 60	FLOOR PLAN CHANGES, ADDED DETAIL & NOTE			

CORPS OF ENGINEERS, U. S. ARMY
OFFICE OF THE DISTRICT ENGINEER
MOBILE, ALA.

DRAWN BY: D.B.
TRACED BY:
CHECKED BY:
SUBMITTED BY: CHIEF ARCH. SECTION
APPROVED: CHIEF DESIGN BRANCH
APPROVED: COL., CORPS OF ENGINEERS - DISTRICT ENGR.
DATE: MAY - 1960

U.S. ARMY ORDNANCE CORPS - REDSTONE ARSENAL - HUNTSVILLE, ALA.
ARMY BALLISTIC MISSILE AGENCY

ADDITION TO STRUCTURES AND MECHANICS BUILDING 4619
VIBRATION EXCITER FACILITY
FLOOR PLAN & DETAILS

APPROVED: CHIEF ENGINEERING DIVISION
DATE: MAY, 1960
SCALE: AS SHOWN
SPEC. NO.
FILE NO. RED-11206
DRAWING NO. PE 4619
SHEET 79 OF

SAFETY

Preach safety - then practice what you preach

ARCHITECTURAL SHEET NO. A-1

60-09-15 SH 2

MSFC MASTER BID DISK 11-18-2013

Dietzgen N. O. 138-MW-3 "Agepproof"

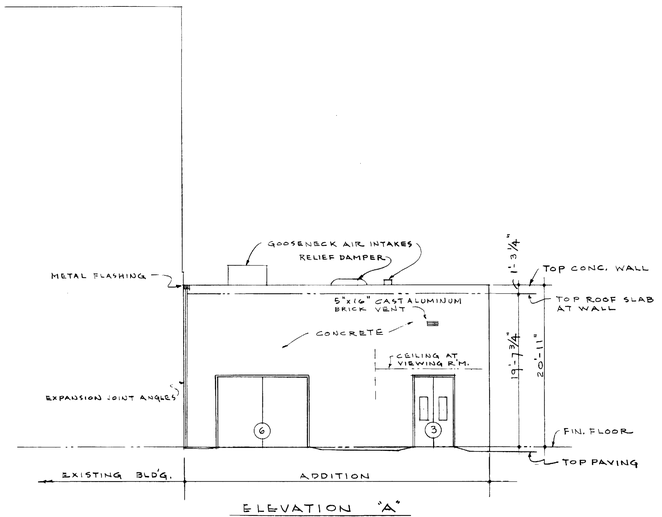

ELEVATION "A"
1/8" = 1'-0"

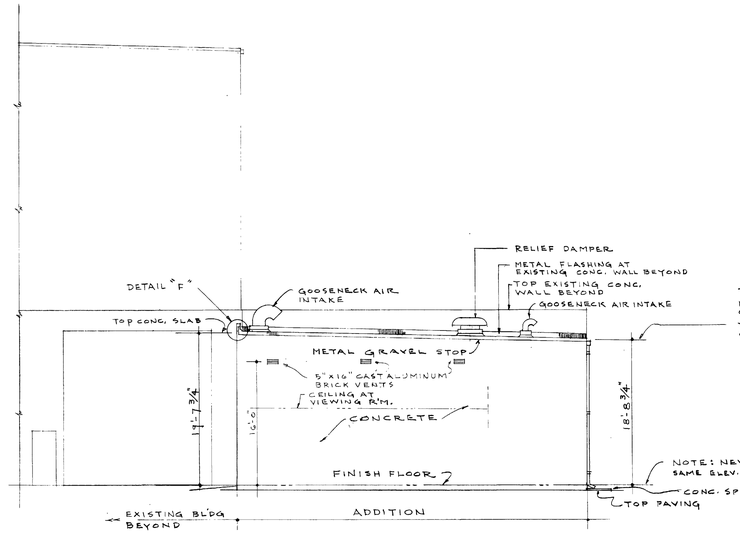

ELEVATION "B"
1/8" = 1'-0"

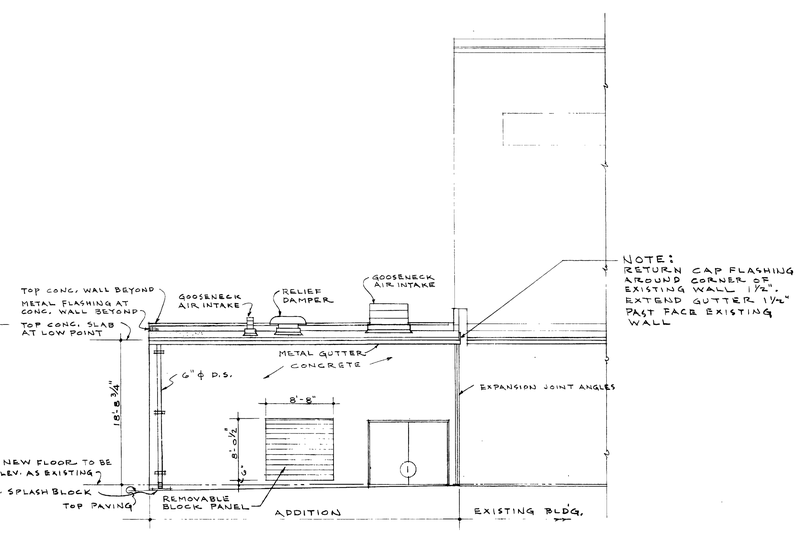

ELEVATION "C"
1/8" = 1'-0"

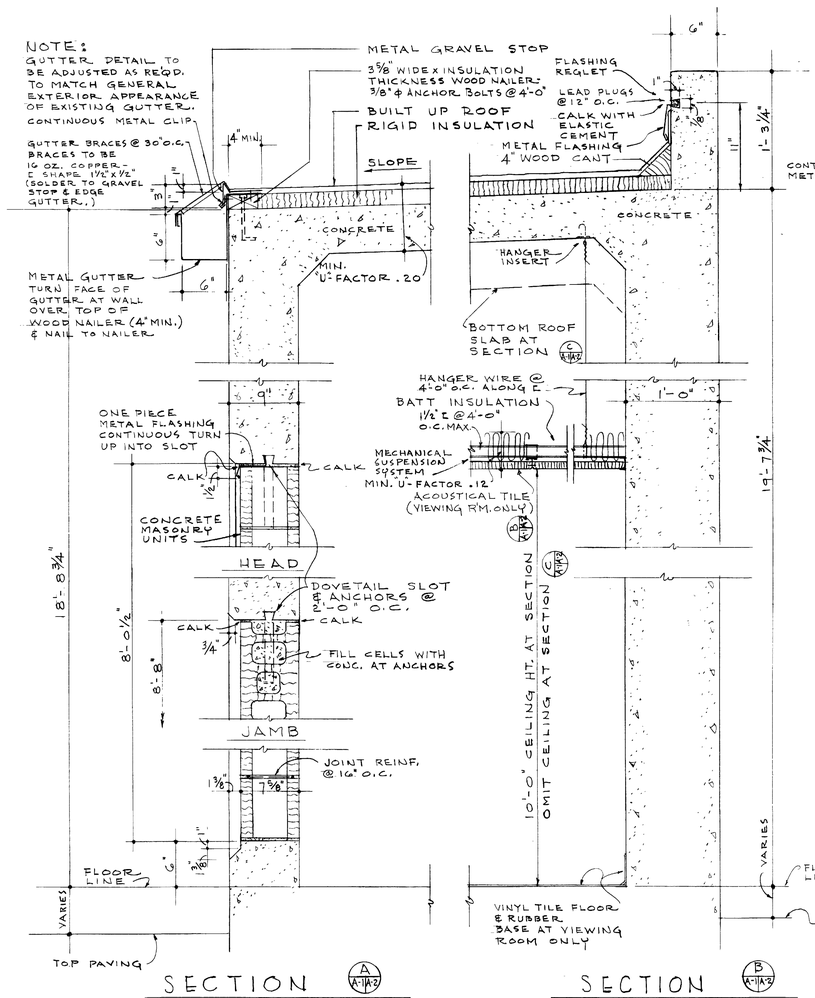

SECTION A A1/A2
SCALE: 1½" = 1'-0"

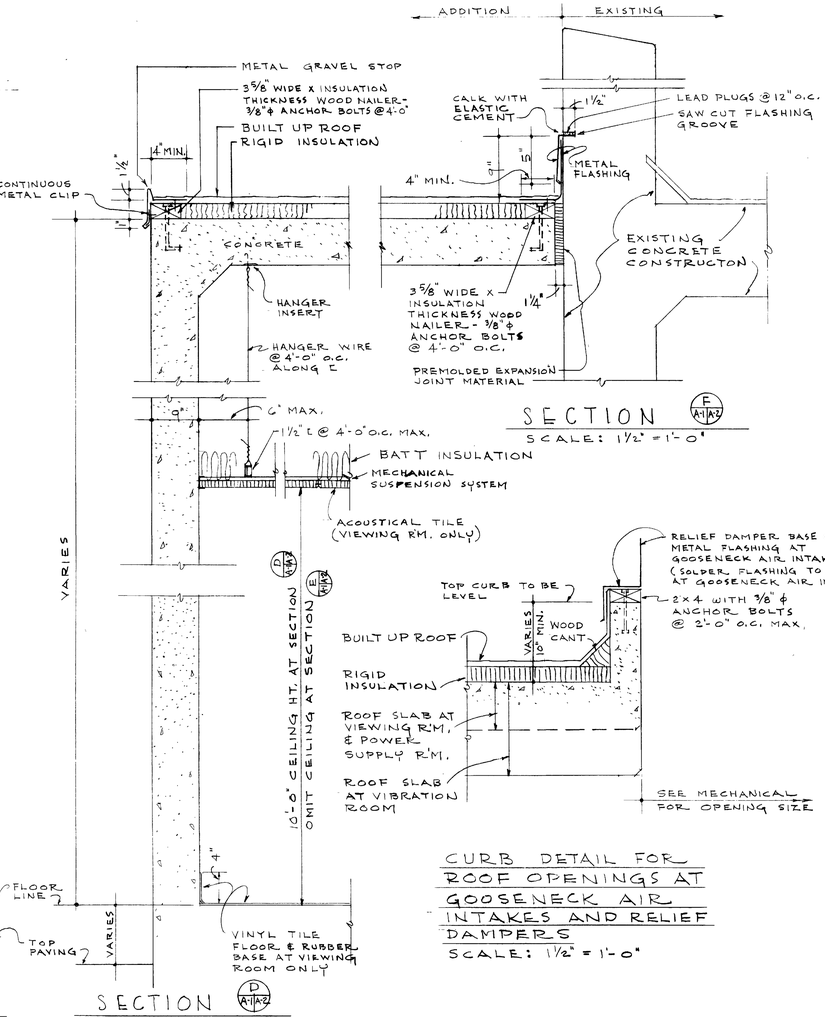

SECTION B A1/A2
SCALE: 1½" = 1'-0"
SECTION C A1/A2 SIMILAR EXCEPT AS NOTED

SECTION E A1/A2
SCALE: 1½" = 1'-0"
SECTION E A1/A2 SIMILAR EXCEPT AS NOTED

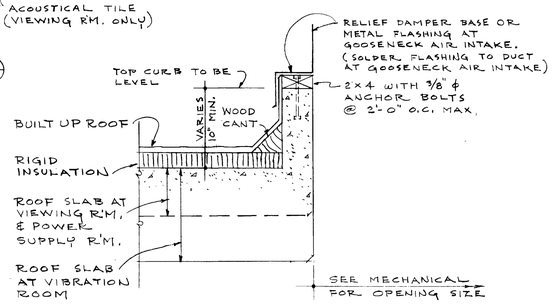

CURB DETAIL FOR ROOF OPENINGS AT GOOSENECK AIR INTAKES AND RELIEF DAMPERS
SCALE: 1½" = 1'-0"

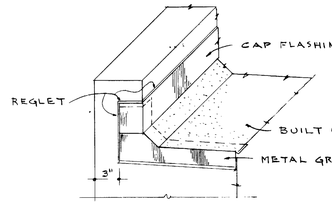

ISOMETRIC
DETAIL "F"
NO SCALE

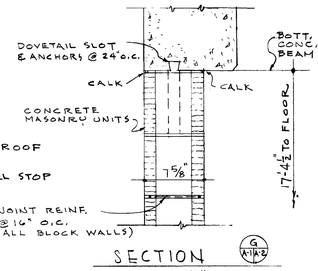

SECTION G A1/A2
SCALE: 1½" = 1'-0"

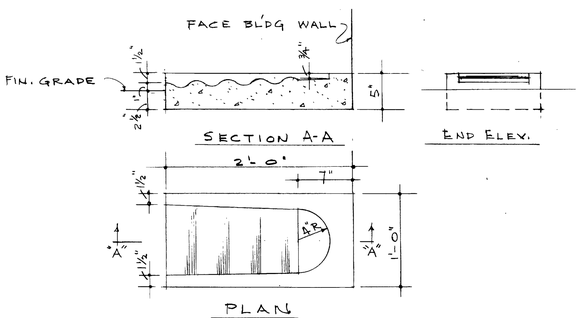

DETAILS OF PRE-CAST CONC. SPLASH BLOCK
SCALE: 1½" = 1'-0"

REVISION	DATE	DESCRIPTION	BY	BY	BY
	JULY '61	REV. AS BUILT, CONTRACT DA-01-076-ENG-4885; RESIDENT ENG			

CORPS OF ENGINEERS, U. S. ARMY
OFFICE OF THE DISTRICT ENGINEER
MOBILE, ALA.

DRAWN BY: D.B.	U.S. ARMY ORDNANCE CORPS - REDSTONE ARSENAL - HUNTSVILLE, ALA.
TRACED BY:	ARMY BALLISTIC MISSILE AGENCY
CHECKED BY:	ADDITION TO STRUCTURES AND MECHANICS BUILDING 4619
SUBMITTED BY: CHIEF ENGR. SECTION	VIBRATION EXCITER FACILITY
APPROVED: CHIEF DESIGN BRANCH	ELEVATIONS & DETAILS
APPROVED: COL. CORPS OF ENGINEERS - DISTRICT ENGR.	APPROVED: CHIEF ENGINEERING DIVISION
DATE: MAY, 1960	DATE: MAY, 1960
	SCALE: AS SHOWN
	FILE NO. RED-11207
	SPEC. NO.
	DRAWING NO. PE 4619 SHEET 80 OF

SAFETY
Preach safety - then practice what you preach

ARCHITECTURAL SHEET NO. A-2

60.09.15
SH 3

MSFC MASTER BID DISK 11-18-2013

Dietzgen N. O. 138-M/W-3 "Approved"

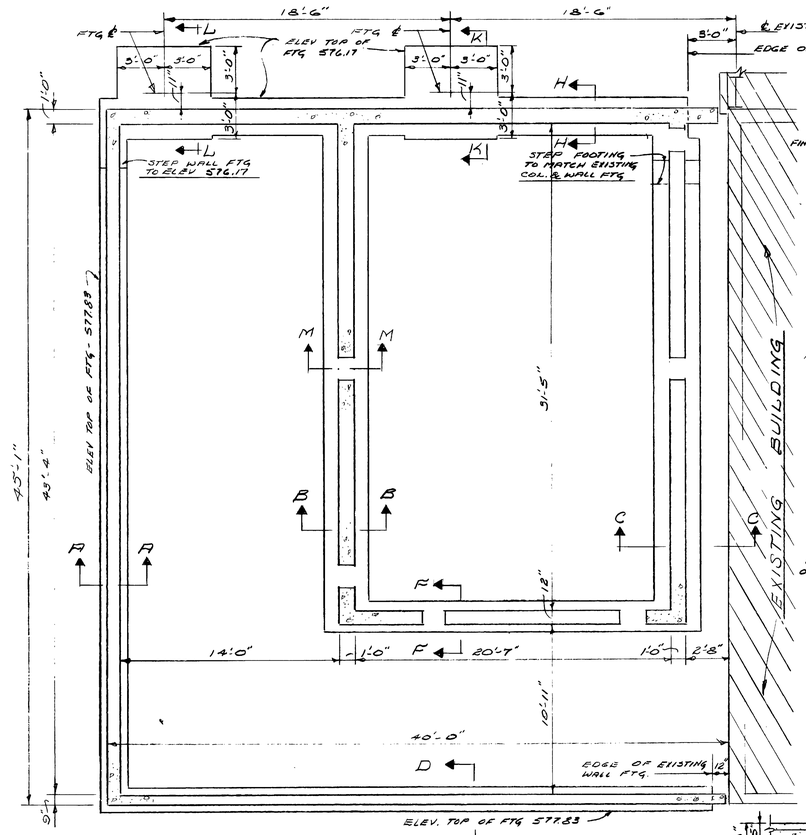

FOUNDATION PLAN

SCALE: 1/8"=1'-0"

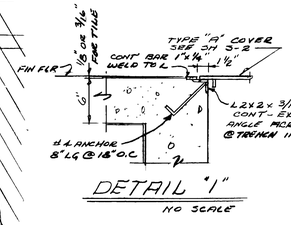

DETAIL "1"

NO SCALE

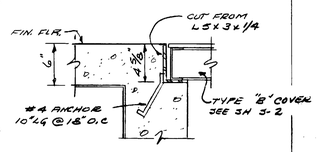

DETAIL "2"

NO SCALE

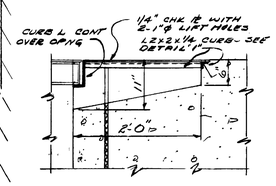

SECTION "N"

SCALE: 1"=1'-0"

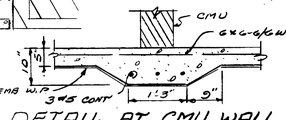

DETAIL AT CMU WALL

3/4"=1'-0"

NOTE: SEE ARCH FOR LOCATION & DETAILS OF VIEWING WINDOWS IN CONC. WALLS

SEE ARCH FOR SIZE & LOCATION OF DOORS & REMOVABLE BLOCK PANEL. PROVIDE 2#9 ABOVE & LINES TO EXTEND 1'-6" BEYOND OPNG EA. WAY.

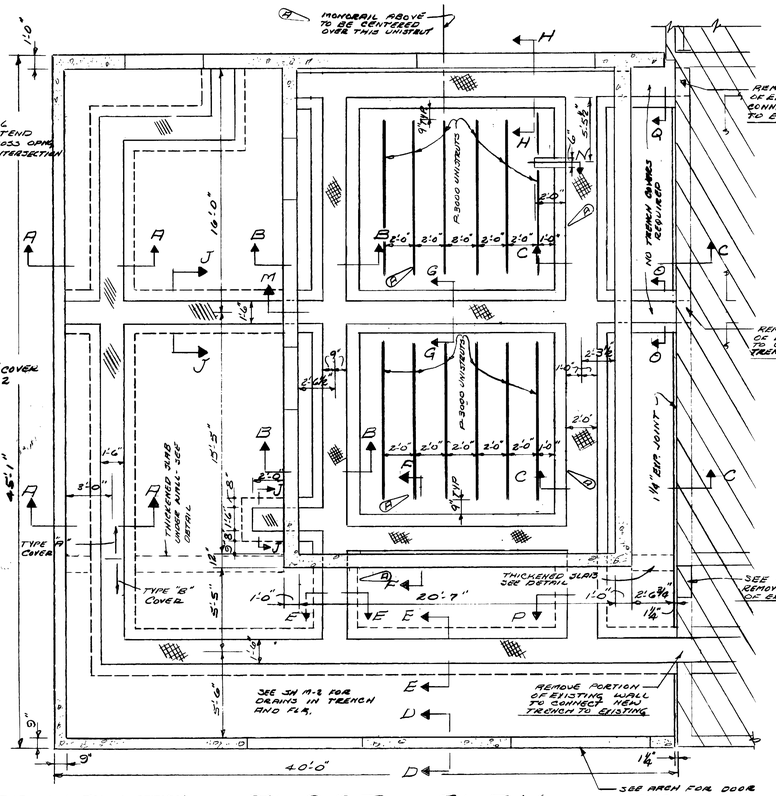

FLOOR PLAN

SCALE: 1/4"=1'-0"

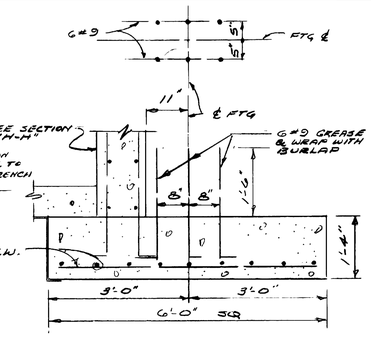

SECTION "K-K"

SCALE: 3/4"=1'-0"

SECTION "L-L" SIMILAR

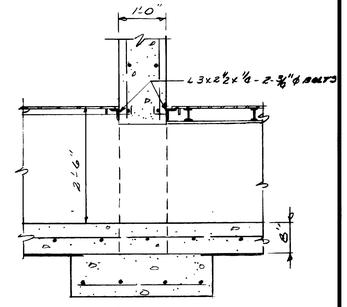

SEE SECTION "B-B" FOR WALL & FTG REINF.

SECTION M-M

SCALE: 3/4"=1'-0"

ALL TRENCH OPNGS. THRU WALLS SIMILAR

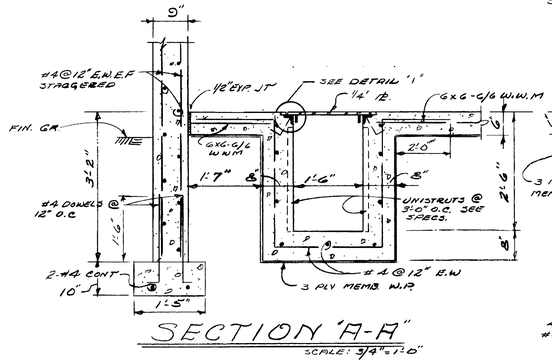

SECTION "A-A"

SCALE: 3/4"=1'-0"

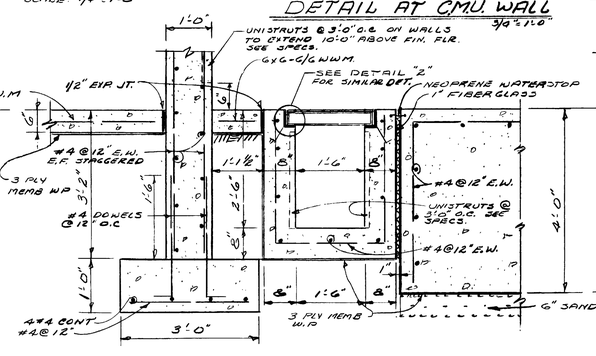

SECTION "B-B"

SCALE: 3/4"=1'-0"

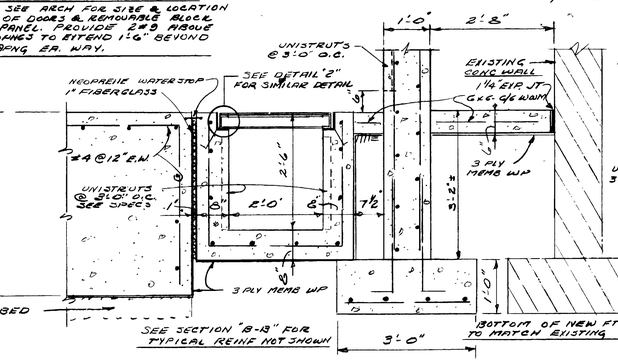

SECTION "C-C"

SCALE: 3/4"=1'-0"

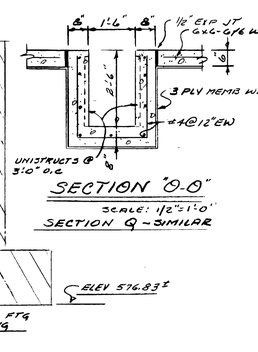

SECTION "O-O"

SCALE: 1/2"=1'-0"

SECTION Q - SIMILAR

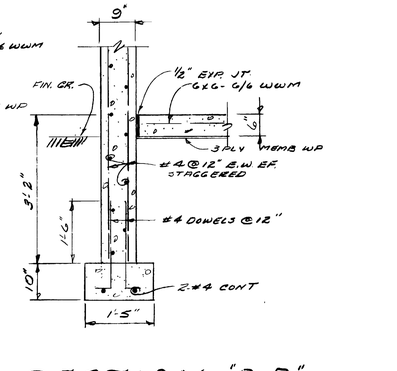

SECTION "D-D"

SCALE: 3/4"=1'-0"

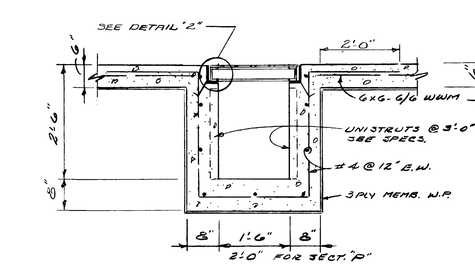

SECTION "E-E"

SCALE: 3/4"=1'-0"

SECTION "P" SAME EXCEPT AS NOTED

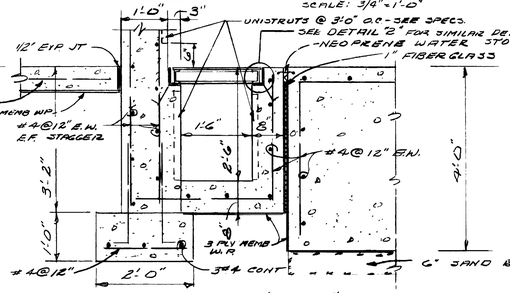

SECTION "F-F"

SCALE: 3/4"=1'-0"

SECTION "H-H" SIMILAR & OPPOSITE HAND

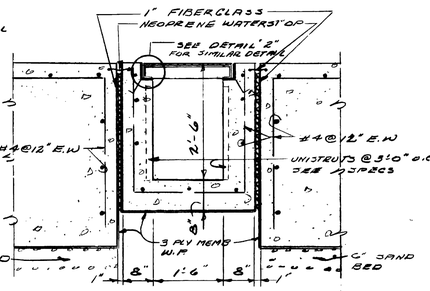

SECTION "G-G"

SCALE: 3/4"=1'-0"

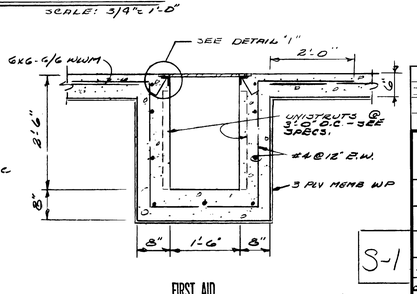

SECTION "J-J"

SCALE: 3/4"=1'-0"

FIRST AID

LITTLE INJURIES CAN LEAD TO BIG INFECTIONS

REVISION	DATE	DESCRIPTION	BY	BY	BY
-	JULY 61	P.C.V. AS BUILT, CONTRACT DA-01-076-ENG-4885, RESIDENT ENG.			
A	17 JUN 60	REVISED UNISTRUT LAYOUT ON PADS - REMOVED SMALL TRENCH - RELOCATED TRENCH			

CORPS OF ENGINEERS, U. S. ARMY
OFFICE OF THE DISTRICT ENGINEER
MOBILE, ALA.

DRAWN BY: WOB	U.S. ARMY ORDNANCE CORPS - REDSTONE ARSENAL - HUNTSVILLE, ALA
TRACED BY:	ARMY BALLISTIC MISSILE AGENCY
CHECKED BY:	ADDITION TO STRUCTURES & MECHANICS BLDG 4619
SUBMITTED BY: [illegible] CHIEF STRUCT. SECT.	VIBRATION EXCITER FACILITY
APPROVED: [illegible] CHIEF, DESIGN BRANCH	FOUNDATION & FLOOR PLANS
APPROVED: [illegible] CHIEF, ENGINEERING DIVISION	DATE: MAY 1960
APPROVED: [illegible] COL. CORPS OF ENGINEERS - DISTRICT ENGINEER	SCALE:
DATE: MAY 1960	FILE NO. RED-11208
	SPEC. NO.
	DRAWING NO. PE 4619 SHEET 81 OF

S-1

60-69-15
SH 4

MSFC MASTER BID DISK 11-18-2013

Dietzgen N. O. 138-MW-3 "Agreproof"

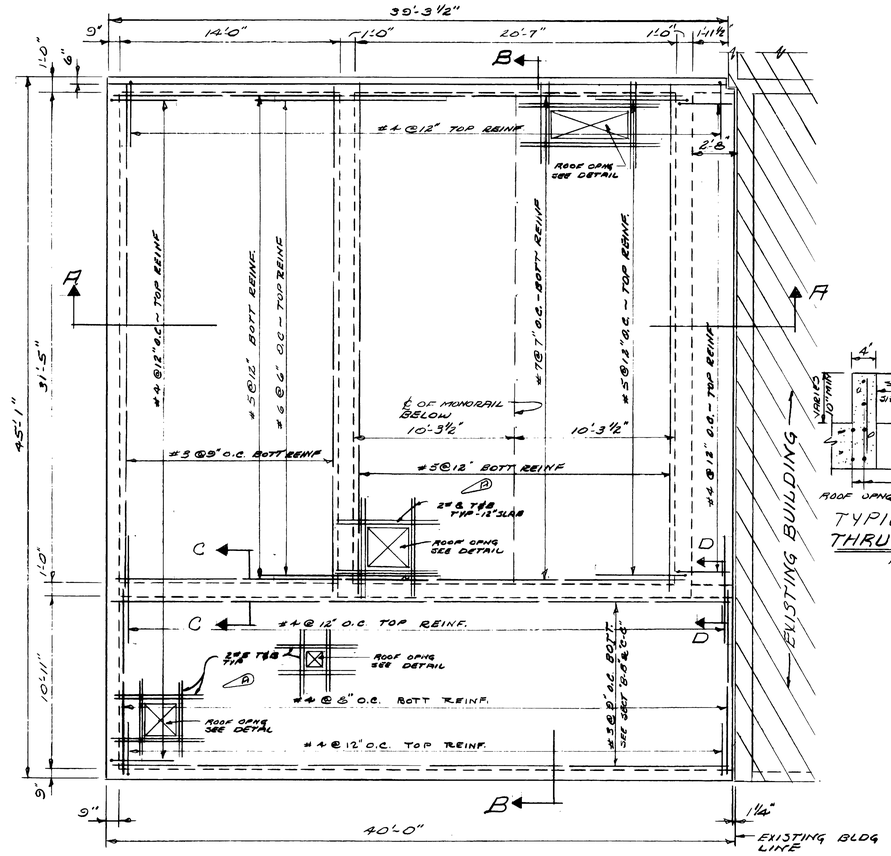

ROOF PLAN

SCALE: 1/8"=1'-0"

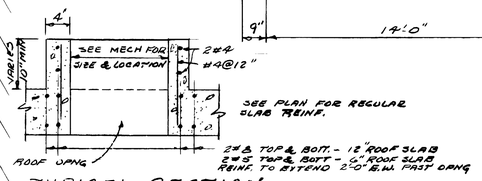

TYPICAL SECTION THRU ROOF OPNG.

NO SCALE

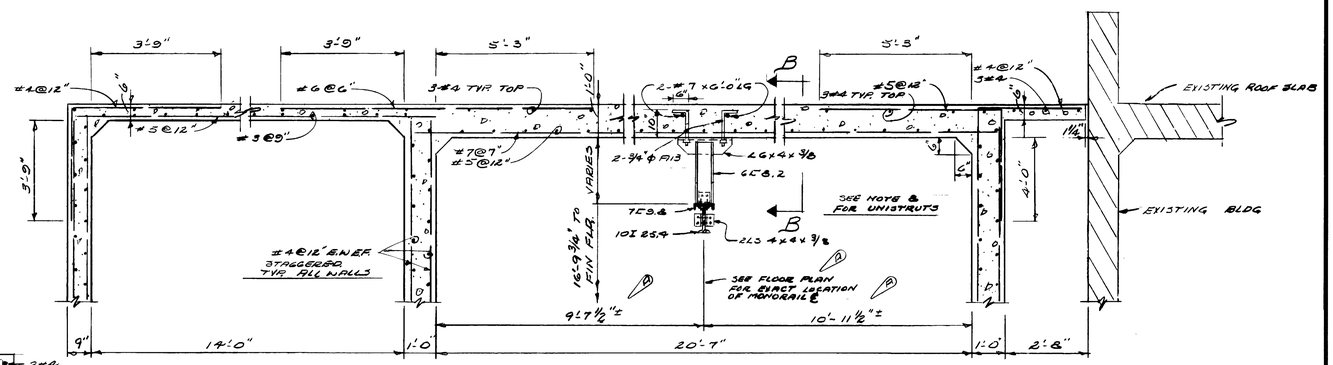

SECTION A-A

SCALE: 1/2"=1'-0"

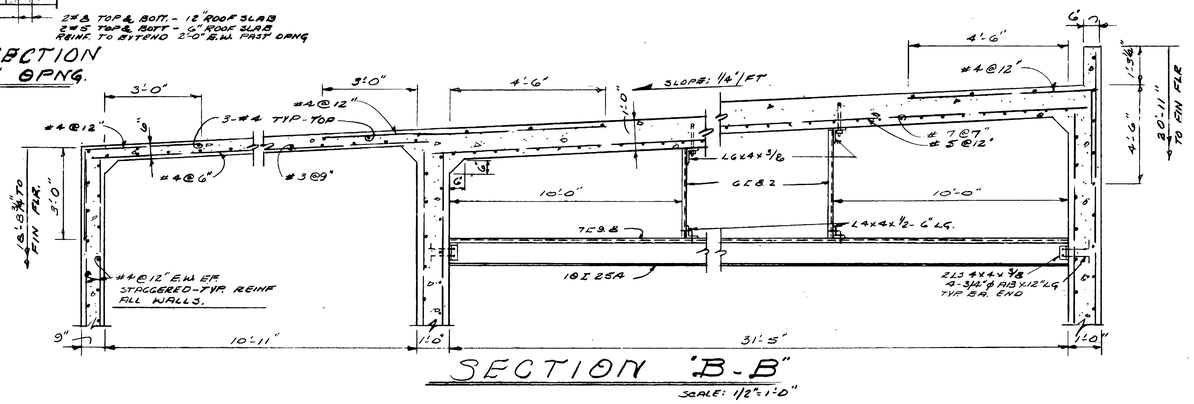

SECTION "B-B"

SCALE: 1/2"=1'-0"

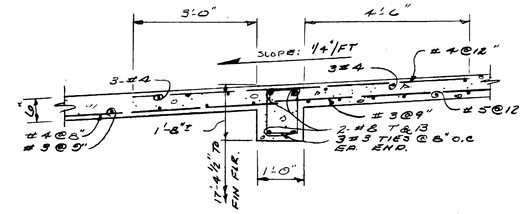

SECTION "C-C"

SCALE: 3/8"=1'-0"

SECTION "D-D" SIMILAR

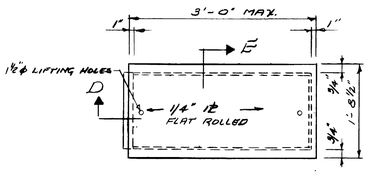

PLAN

TYPE "A" TRENCH COVER

NO SCALE

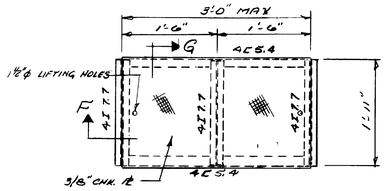

PLAN

1'-6" TRENCH

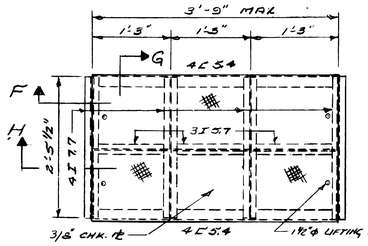

PLAN

2'-0" TRENCH

TYPE "B" TRENCH COVER

NO SCALE

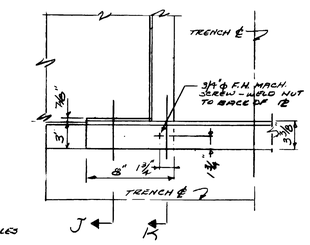

TYPICAL SUPPORT AT TRENCH INTERSECTION — TYPE "B" COVER

NO SCALE

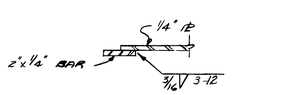

SECTION "D"

SCALE: 3"=1'-0"

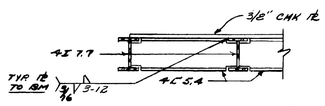

SECTION "F"

NO SCALE

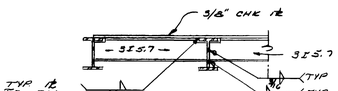

SECTION "H"

NO SCALE

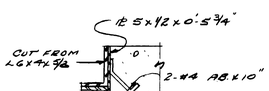

SECTION "J"

SCALE: 1½"=1'-0"

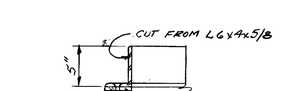

SECTION "K"

SCALE: 1½"=1'-0"

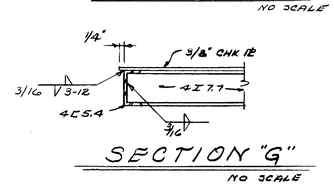

SECTION "E"

SCALE: 3"=1'-0"

SECTION "G"

NO SCALE

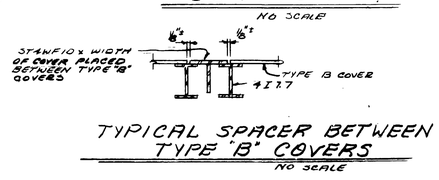

TYPICAL SPACER BETWEEN TYPE "B" COVERS

NO SCALE

NOTES:

1. CONCRETE TO HAVE A MINIMUM COMPRESSIVE STRENGTH OF 3000 PSI AT 28 DAYS.
2. MIN. CONC. COVERAGE FOR REINF.: SLABS--3/4", WALLS--2", BEAMS--1½", FOOTINGS--3".
3. WHEN REINFORCING IS SPLICED, LAP A MIN OF 30 DIA. OR 15".
4. ALLOWABLE SOIL PRESSURE 4,000 PSF.
5. ALL REINFORCING TO BE OFFSET AND INTERMEDIATE GRADE STEEL.
6. STRUCTURAL STEEL TO CONFORM TO ASTM A-7, F_y = 30,000 PSI.
7. ALL WELDING TO BE SHOP WELDED UNLESS OTHERWISE NOTED.
8. UNISTRUTS ON WALLS TO BE 3'-0" O.C. - SECTIONS TO START 6" ABOVE FLOOR AND EXTEND 10'-0" ABOVE THE FLOOR - SEE SPECIFICATIONS. PROVIDE UNISTRUTS IN 12" ROOF SLAB @ 2'-0" O.C. UNISTRUTS TO BE CONTINOUS & PARALLEL TO CRANE MONORAIL, CUT AS DIRECTED BY CONTRACTING OFFICER.

REVISION	DATE	DESCRIPTION	BY	BY	BY
A	JULY '61	REV. AS BUILT, CONTRACT DA-01-076-ENG-4665 RESIDENT ENG			
	17 JUN 60	ADD ROOF OPNG - RELOCATED MONORAIL CENTER LINE			

CORPS OF ENGINEERS, U. S. ARMY
OFFICE OF THE DISTRICT ENGINEER
MOBILE, ALA.

DRAWN BY:	U.S. ARMY ORDNANCE CORPS-REDSTONE ARSENAL-HUNTSVILLE, ALA
TRACED BY:	ARMY BALLISTIC MISSILE AGENCY
CHECKED BY:	ADDITION TO STRUCTURES & MECHANICS BLDG 4619 VIBRATION EXCITER FACILITY
SUBMITTED BY:	ROOF PLAN & DETAILS
APPROVED:	APPROVED: DATE: MAY, 1960
APPROVED:	SCALE: SPEC. NO.
COL. CORPS OF ENGINEERS - DISTRICT ENGINEER	FILE NO. RED - 11209 DRAWING NO. PE 4619 SHEET 82 OF
DATE: MAY, 1960	

S-2

FIRST AID
LITTLE INJURIES CAN LEAD TO BIG INFECTIONS

60, 69, 15
SA-5

MSFC MASTER BID DISK 11-18-2013

Diazogen N. O. 136-MW-3 "Approved"

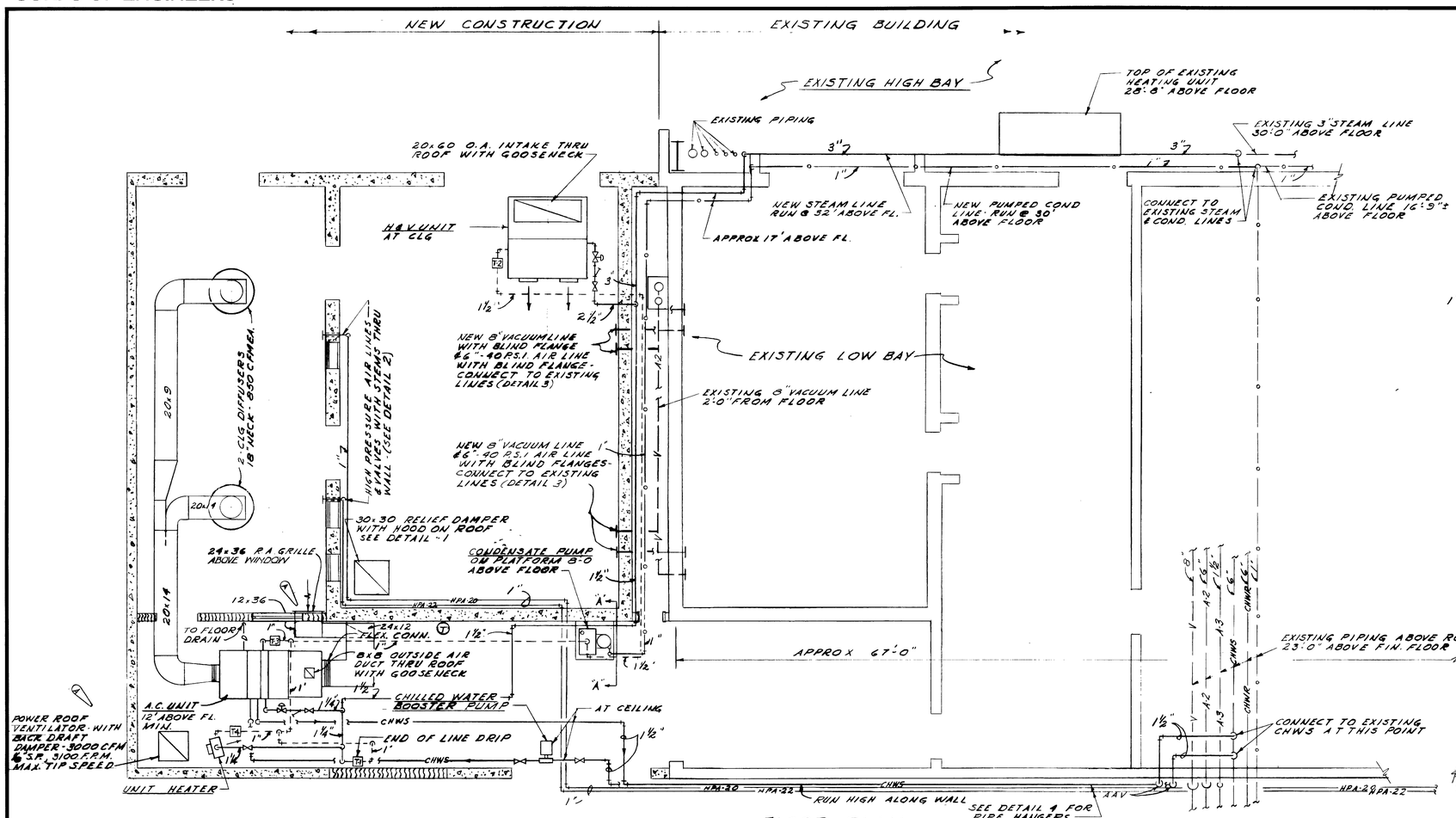

FLOOR PLAN
SCALE: 1/4"-1'-0"

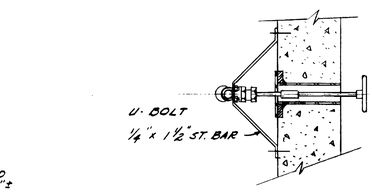

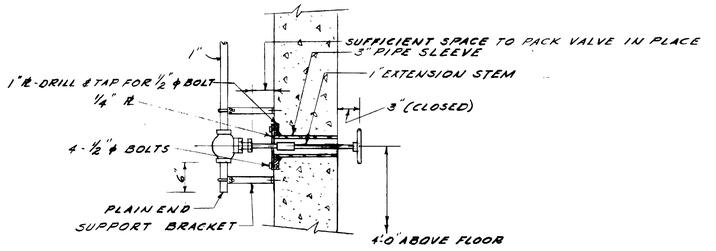

DETAIL-2 - AIR VALVE
NO SCALE

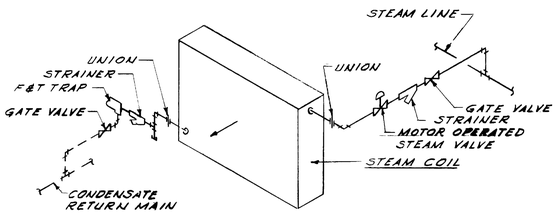

TYPICAL STEAM COIL PIPING
NO SCALE

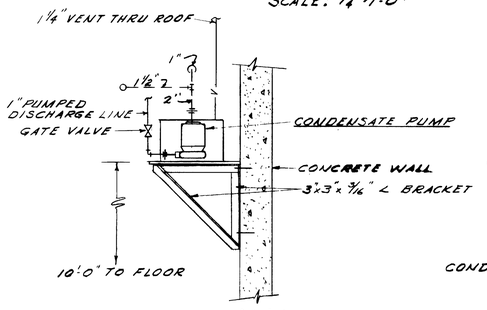

SECTION "A"-"A"
SCALE: 1/2"-1'-0"

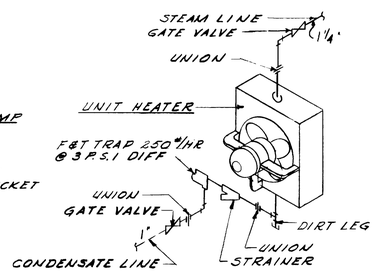

UNIT HEATER PIPING
NO SCALE

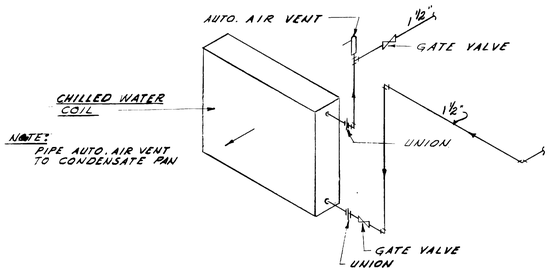

CHILLED WATER COIL PIPING
NO SCALE

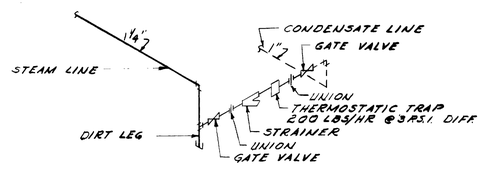

END OF LINE DRIP
NO SCALE

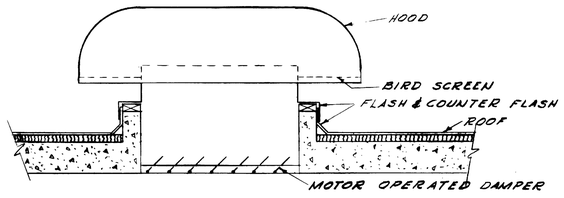

DETAIL-1 - RELIEF DAMPER
NO SCALE

REVISION	DATE	DESCRIPTION	BY	BY	BY
	JULY '61	REV. AS BUILT, CONTRACT DA-01-076-ENG-4865, RESIDENT ENG			
1	17 JUN, 60	ADDED POWER ROOF VENTILATOR			

CORPS OF ENGINEERS, U. S. ARMY
OFFICE OF THE DISTRICT ENGINEER
MOBILE, ALA.

DRAWN BY: J.P.F.
TRACED BY:
CHECKED BY:
SUBMITTED BY: Chief, Plans & Const. Sec.
APPROVED: Chief, Design Branch
APPROVED: Chief, Engineering Division
APPROVED: Colonel, Corps of Engineers, District Engineer
DATE: MAY, 1960

U.S. ARMY ORDNANCE CORPS - REDSTONE ARSENAL - HUNTSVILLE, ALA.
ARMY BALLISTIC MISSILE AGENCY
ADDITION TO STRUCTURES & MECHANICS BLDG 4619
VIBRATION EXCITER FACILITY
HEATING, AIR CONDITIONING, PIPING

APPROVED: [signature] DATE: MAY, 1960
SCALE: AS SHOWN
FILE NO. RED-11210
SPEC. NO.
DRAWING NO. PE 4619
SHEET 18 OF

SHEET NO. M-1

FIRST AID
LITTLE INJURIES CAN LEAD TO BIG INFECTIONS

60-09-15
SM-6

MSFC MASTER BID DISK 11-18-2013

Dietzgen N. O. 138-MW-3 "Approved"

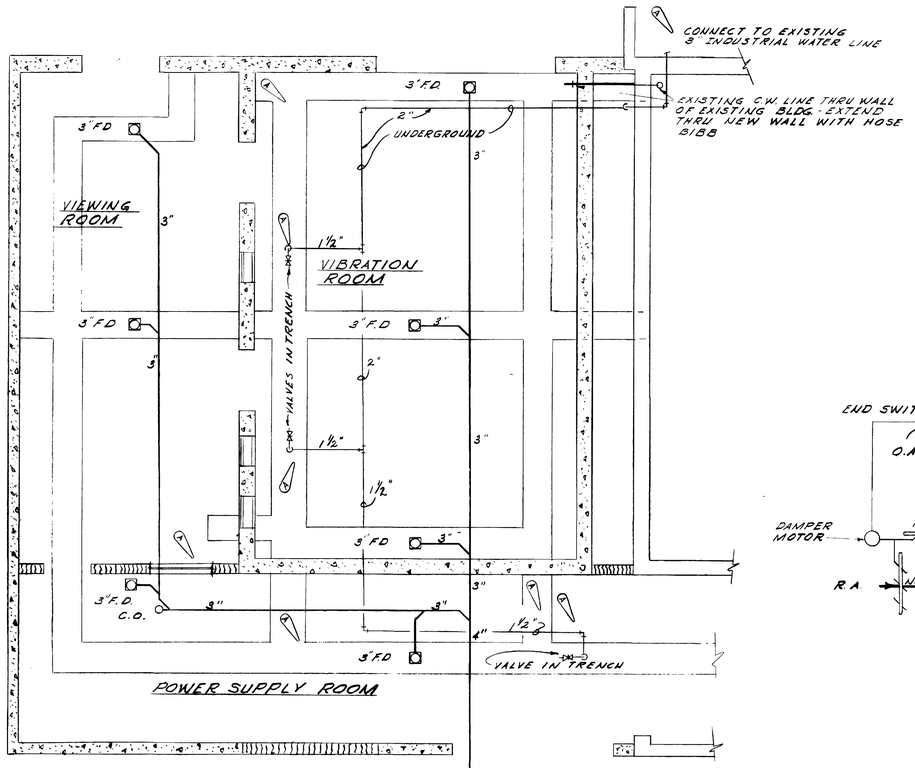

PLUMBING PLAN
SCALE: ¼" = 1'-0"

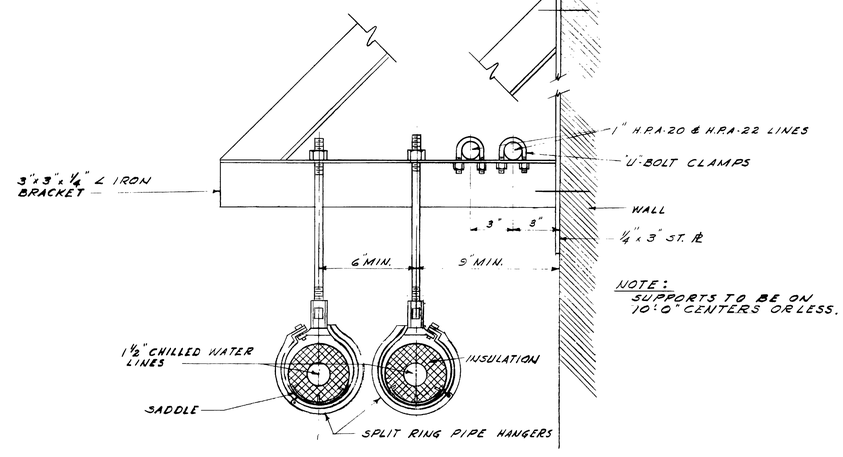

DETAIL 4- PIPE HANGER
SCALE: 3" = 1'-0"

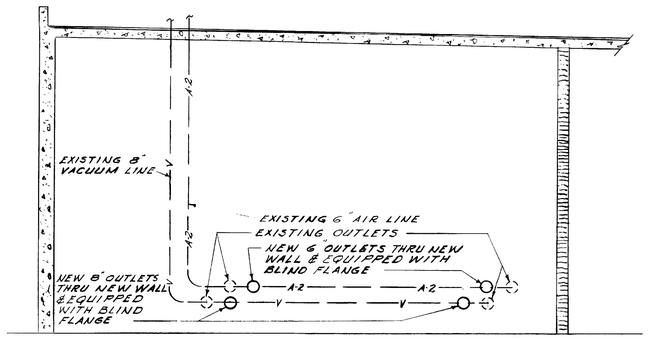

DETAIL 3- VACUUM & 40 P.S.I. AIR PIPING
SCALE: ¼" = 1'-0"

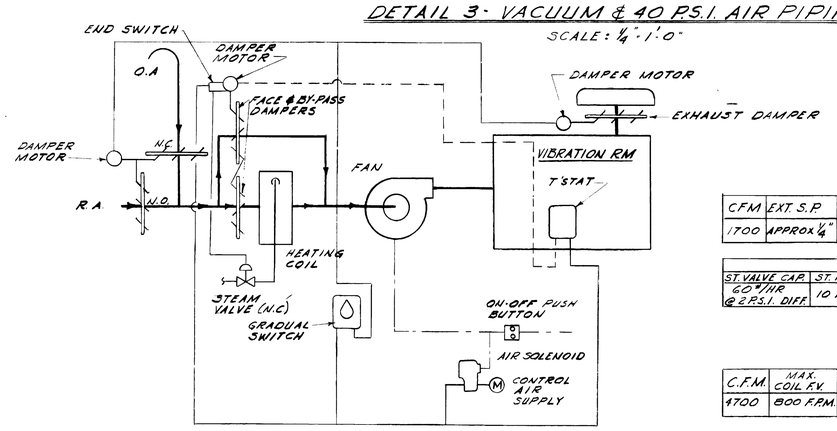

HEATING & VENTILATING UNIT CONTROLS

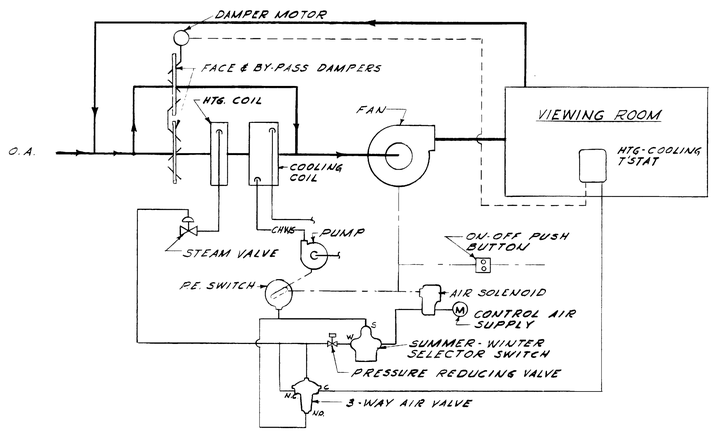

A.C. UNIT CONTROLS

LEGEND

———	STEAM LINE
——o———	PUMPED CONDENSATE LINE
- - - - -	TRAPPED CONDENSATE LINE
CHWS	CHILLED WATER SUPPLY LINE
CHWR	CHILLED WATER RETURN LINE
V	VACUUM OR VENT LINE
A-2	40 P.S.I. AIR LINE
HPA	HIGH PRESSURE AIR LINE (3500 P.S.I.)
	GATE VALVE
T	STEAM TRAP
F.D.	FLOOR DRAIN
C.O.	CLEAN OUT
R.A.	RETURN AIR
O.A.	OUTSIDE AIR
AAV	AUTOMATIC AIR VENT

EQUIPMENT SCHEDULE

A.C. UNIT

C.F.M.	EXT. S.P.	O.A.C.F.M.	COOLING COIL MAX. F.V.	ENT. AIR TEMP.	LV. AIR TEMP.	G.P.M.	ENT. WATER TEMP.
1700	APPROX ¼"	120	500 F.P.M.	76.4°F D.B & 64°F W.B.	58°F D.B & 56°F W.B.	15	50°F

HEATING COIL ST. VALVE CAP.	ST. PRESS.	ENT. AIR	LV. AIR	MAX. F.V.	TRAP CAP.	TYPE	MAX. FILTER VELOCITY	REMARKS
60 #/HR @ 2 P.S.I. DIFF.	10 P.S.I.	65°F	87°F	800 F.P.M.	200 #/HR @ 3 P.S.I. DIFF.	NON-FREEZE	300 F.P.M.	FACE & BY-PASS DAMPERS

H. & V. UNIT

C.F.M.	MAX. COIL F.V.	EXT. S.P.	ENT. AIR TEMP.	LV. AIR TEMP.	TYPE COIL	STEAM PRESS.	ST. VALVE CAPACITY	TRAP CAPACITY	MAX. FILTER VELOCITY	REMARKS
4700	800 F.P.M.	.1"	10°F.	90°F	NON-FREEZE	10 P.S.I.	450 #/HR @ 2 P.S.I. DIFF.	1350 #/HR @ 3 P.S.I. DIFF.	300 F.P.M.	FACE & BY-PASS DAMPERS.

UNIT HEATER

CAPACITY	NOISE LEVEL	STEAM PRESS.	TRAP CAPACITY
72,000 BTU/HR	I	10 P.S.I.	250 #/HR @ 3 P.S.I. DIFF

CHILLED WATER PUMP

G.P.M.	HEAD	TYPE	R.P.M.
15	15 FT.	PIPE MOUNTED	1750

CONDENSATE PUMP

G.P.M.	HEAD	R.P.M.	RECEIVER CAP.	TYPE
6	30 P.S.I.	1750	15 GAL.	SIMPLEX

REVISION	DATE	DESCRIPTION	BY	BY	BY
—	JULY '61	REV. AS BUILT, CONTRACT DA-01-076-ENG-4505, RESIDENT ENG			
1	17 JUN 60	ADDED INDUSTRIAL WATER LINES & MISC.			

CORPS OF ENGINEERS, U. S. ARMY
OFFICE OF THE DISTRICT ENGINEER
MOBILE, ALA.

DRAWN BY: J.P.F.
TRACED BY:
CHECKED BY:
SUBMITTED BY: Chief, Plans & Const. Sec.
APPROVED: Chief, Engineering Division
APPROVED: Colonel, Corps of Engineers, District Engineer
DATE: MAY, 1960

U.S. ARMY ORDNANCE CORPS · REDSTONE ARSENAL · HUNTSVILLE, ALA.
ARMY BALLISTIC MISSILE AGENCY

ADDITION TO STRUCTURES & MECHANICS BLDG 4619 VIBRATION EXCITER FACILITY
HEATING, AIR CONDITIONING, PIPING

APPROVED: Chief, Engineering Division
DATE: MAY, 1960
SCALE: AS SHOWN
SPEC. NO.
FILE NO. RED-11211
DRAWING NO. PE 4619
SHEET 34 OF

SHEET NO. M-2

60-09-15 SH 7

MSFC MASTER BID DISK 11-18-2013

Dietzgen N. O. 138-MW-3 "Agenproof"

CORPS OF ENGINEERS

SUBSTATION

750 KVA 4160/2400 240V. 3Φ

750 KVA 4160/2400 480V. 3Φ

500 KVA-4160/2400 120/208 V., 3Φ

240 VOLT MAIN SWITCHBOARD

480 VOLT MAIN SWITCHBOARD

(NEW) 3Φ, 120/208 V., 4W., 400A., PLUG-IN BUS DUCT (N.E.)

3-50 KVA 1Φ. DRY TYPE CONNECT Y-Δ (NEW)

400A

240 V., 800 A., 3Φ., 4W., PLUG-IN DUCT (N.E.)

SPACE 800A 800A 800A 800A 100A

800A 450A 800A SPACE SPACE

480 V., 800 A., 3Φ., 4W., PLUG-IN DUCT (SW)

70A 150A 70A 20A 100A

C 45KW 70A R RECT. 1½ TUBE FLARING

30 VIBR. LAB

TEST LAB

300A 300A

(NEW) VIB. EQUIP

240 V., 800 A., 3Φ., 4W., PLUG-IN DUCT (S.E.)

MOTOR CONTROL CENTER - MCC 2 (HEATING & VENTILATING)

450A

MOTOR CONTROL CENTER - MCC-1 (COMPRESSOR ROOM)

480 V., 800 A, 3Φ, 4W., PLUG-IN DUCT (S.E.)

(NEW) 3Φ, 120/208 V., 400A., 4 W., PLUG-IN BUS DUCT (NW)

200A

3Φ, 4W., LOAD DIST. CENTER (NW) (NEW)

70A 70A 70A 50A 70A 50A 50A 100A

PANEL "PA" PANEL "PD" PANEL "PG" SPARES SPACES

3 REG. PANEL "PR"

3-50 KVA, 1Φ, DRY TYPE CONNECT Y-Δ (NEW)

400A

240 V., 800A., 3Φ, 4 W., PLUG-IN DUCT (NW)

240 V., 800 AMP., 3Φ, 4-WIRE PLUG-IN-DUCT (SW)

40A (NEW) 100A (NEW) 100A (NEW) 30A (NEW)

30A

5 KVA-1Φ 240-120V. TRANSF. FOR 120V. SERVICE TO AMPLI-FIER

(NEW) MOTOR CONTROL ASSLY

½ ¾ 1 1½

1 TON ELECTRIC HOIST

C.W. BOOSTER PUMP

CONDENSER PUMP

AIR HANDLING FAN

HEATING & VENT UNIT

C 40 C 70 WELDING RECEPTACLES (NEW)

C 40 C 70

PANEL "PPI" (COMPRESSOR BLDG.)

EXISTING WESTINGHOUSE 120/208V., 3Φ, 4W, MAIN SWITCHBOARD (RM. 152)

1600A

100A 100A 40A 40A 40A 40A 90A 150A

PANEL "LC" PANEL "LD" PANEL "PB" PANEL "PE" PANEL "PE" PANEL "PH" PANEL "PK" PANEL "LC" SPACES

EXISTING BREAKER TO BECOME A SPARE

PANEL "LC" TO HAVE NEW FEEDER BREAKER AND NEW FEEDER

EACH PANEL TO HAVE NEW FEEDER BREAKER & NEW FEEDER. REPLACE EXISTING BREAKERS WITH WESTINGHOUSE TYPE "AB", "JB" FRAME, 240 VOLT, 3 P. BREAKERS SIZED AS INDICATED. NEW FEEDER CONDUCTORS AS INDICATED ON THE DRAWINGS. PANEL "LD" REQUIRES NEW FEEDER — NEW FEEDER BREAKER

NEW FEEDER BREAKER TO BE WESTINGHOUSE TYPE "AB", JB FRAME, 240 VOLT, 3 P. NEW FEEDER AS INDICATED ON THE DRAWINGS.

REVISION	DATE	DESCRIPTION	BY
	JULY 60	REV. AS BUILT, CONTRACT DA-01-07	
6	17 JUNE 60	DELETED 600A DISCONNECT, ADD	

CORPS OF ENGINEERS, U.S. ARMY
OFFICE OF THE DISTRICT ENGINEER
MOBILE, ALA.

DRAWN BY: J.W.A.
TRACED BY:
CHECKED BY: A.W.S.
QUANTITIES BY:

U.S. ARMY ORDINANCE CORPS ARSENAL - HUNTSVILLE, (ALA)
ARMY BALLISTIC MISSILE AGENCY
ADDITION TO STRUCTURES & MECHANICAL BLDG. 4619
VIBRATION TESTING FACILITY
SINGLE LINE DIAGRAM

FIRST-VOLT

MSFC MASTER BID DISK 11-18-2013

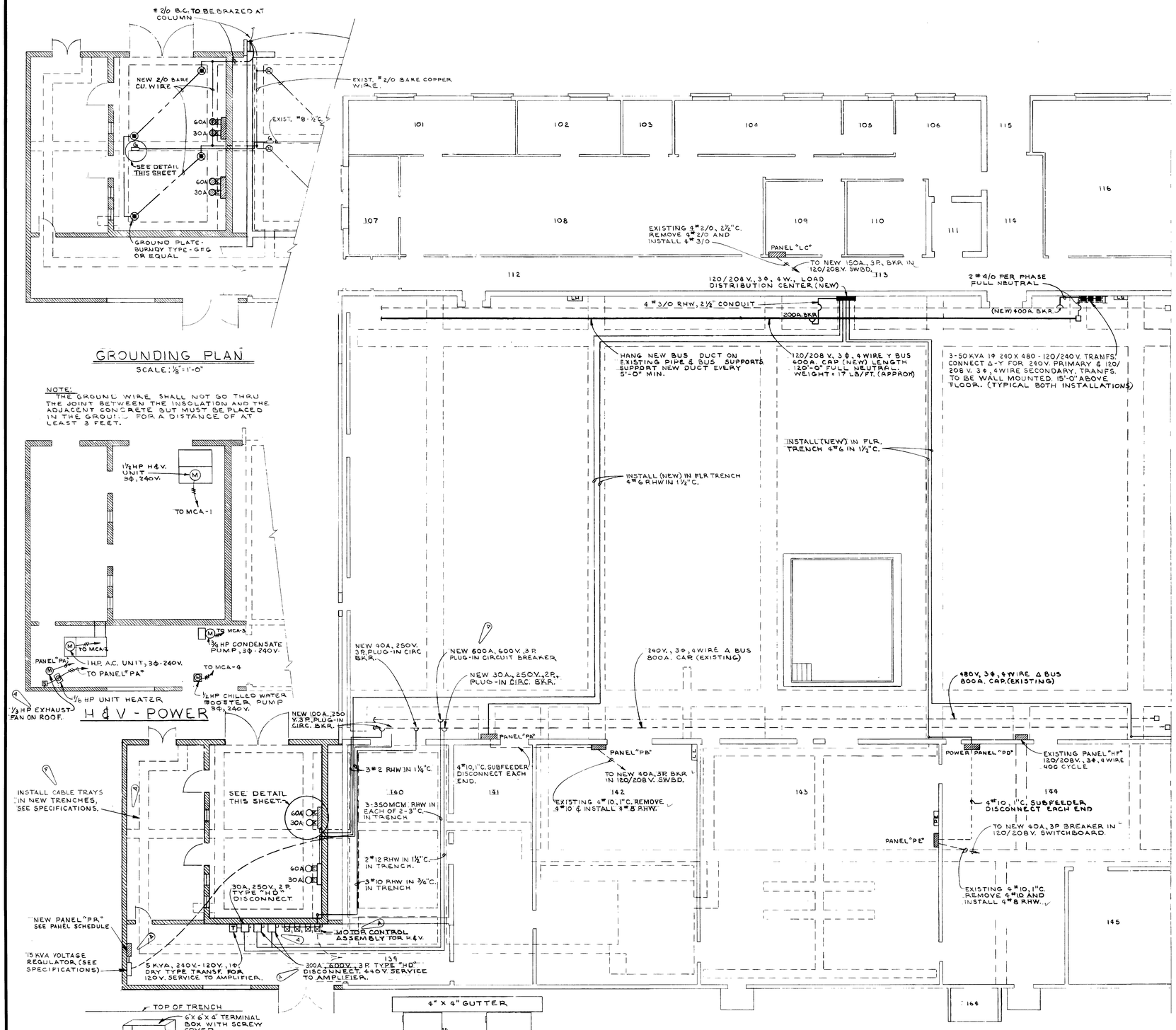

GROUNDING PLAN

SCALE: ⅛"=1'-0"

NOTE:
THE GROUND WIRE SHALL NOT GO THRU THE JOINT BETWEEN THE INSULATION AND THE ADJACENT CONCRETE BUT MUST BE PLACED IN THE GROUT FOR A DISTANCE OF AT LEAST 3 FEET.

H & V - POWER

POWER PLAN - WEST END

SCALE: ⅛"=1'-0"

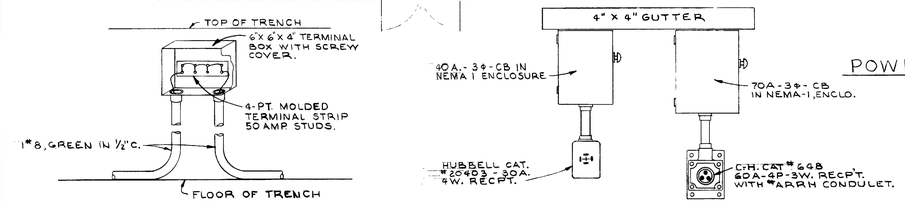

TRENCH GROUND TERMINAL

N.T.S.

WELDING OUTLET DETAIL

N.T.S.

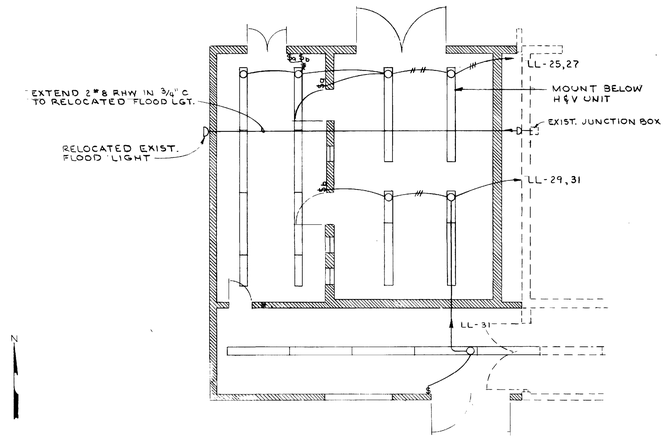

LIGHTING PLAN

SCALE: ⅛"=1'-0"

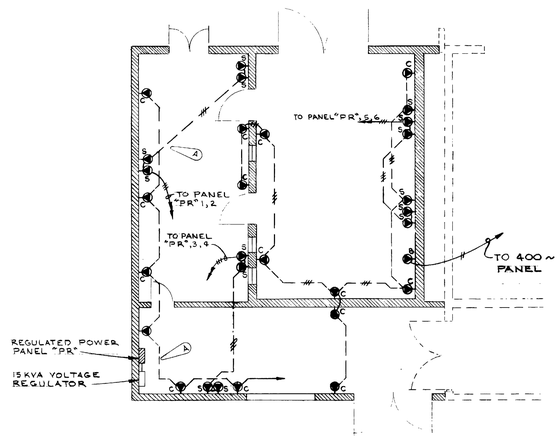

RECEPTACLE PLAN

SCALE: ⅛"=1'-0"

C - DUPLEX RECEPTACLE: 3-WIRE GROUNDING TYPE, 15 AMP., 125 VOLT, POLARIZED. HUBBELL CAT. NO 5262, OR EQUAL.

D - 400 CYCLE RECEPTACLE:
CROUSE-HINDS, DEEP-TYPE FD SERIES CAST CONDULET WITH CAST COVER, SPRING DOOR, HUBBELL CATALOG NO. 7418, WITH A TWIST-LOCK, 3 WIRE-20 AMP. PORCELAIN RECEPTACLE, HUBBELL CAT. NO. 7310-G AND A 3 WIRE 20 AMPS CORD-GRIP CAP, HUBBELL CAT. NO. 7311 FOR USE WITH 120 VOLT, 1Φ, 400~ RECEPTACLE. CONDULET TO BE PAINTED PURPLE. DESIGNATED BY THE LETTER "D."

S - 120 VOLT REGULATED RECEPTACLE:
CROUSE-HINDS, DEEP-TYPE "FD" SERIES CAST CONDULET WITH CAST COVER. CROUSE-HINDS TYPE DS 23G, WITH A GROUNDING TYPE DUPLEX RECEPTACLE, HUBBELL CAT. NO. 5252 AND CORD GRIP CAP HUBBELL CAT. NO. 5276 FOR USE WITH 120 VOLT, 60~, 1Φ REGULATED POWER. GROUND LUG TO BE CONNECTED TO JUNCTION BOX. CONDULET TO BE PAINTED RED AND DESIGNATED BY LETTER "S".

REVISION	DATE	DESCRIPTION	BY	BY	BY
	JULY 61	F.E.V. AS BUILT. CONTRACT DA-01-076-ENG-4885 RESIDENT ENG			
A	17 JUNE 60	RELOCATED CABLE TRENCH, INSTL PR-1 5KVA REGULATOR. DELETED 600A DISCONNECT, ADDED 2-300A DISCONNECTS, ¼HP EXHAUST FAN & NOTE.			

CORPS OF ENGINEERS, U. S. ARMY
OFFICE OF THE DISTRICT ENGINEER
MOBILE, ALA.

U.S. ARMY ORDNANCE CORPS - REDSTONE ARSENAL - HUNTSVILLE, ALA.
ARMY BALLISTIC MISSILE AGENCY
ADDITION TO STRUCTURES & MECHANICS BLDG. 4619
VIBRATION EXCITER FACILITY

ELECTRICAL PLAN

DRAWN BY: J.W.A.
TRACED BY:
CHECKED BY: A.W.S.
SUBMITTED BY: Chief, Electrical Section
APPROVED: Chief, Design Branch
APPROVED: Chief, Engineering Division — DATE: MAY, 1960
APPROVED: Colonel, Corps of Engineers, District Engineer — DATE: MAY, 1960

SCALE: AS SHOWN
FILE NO. RED-11213
SPEC. NO.
DRAWING NO. PE 4619
SHEET 86 OF

SHEET REF. NO. E-2

FIRST AID
LITTLE INJURIES CAN LEAD TO BIG INFECTIONS

60-09-15 SH 9

MSEC MASTER BID DISK 11-18-2013

Dietzgen N. O. 158-MW-3 "Ageproof"

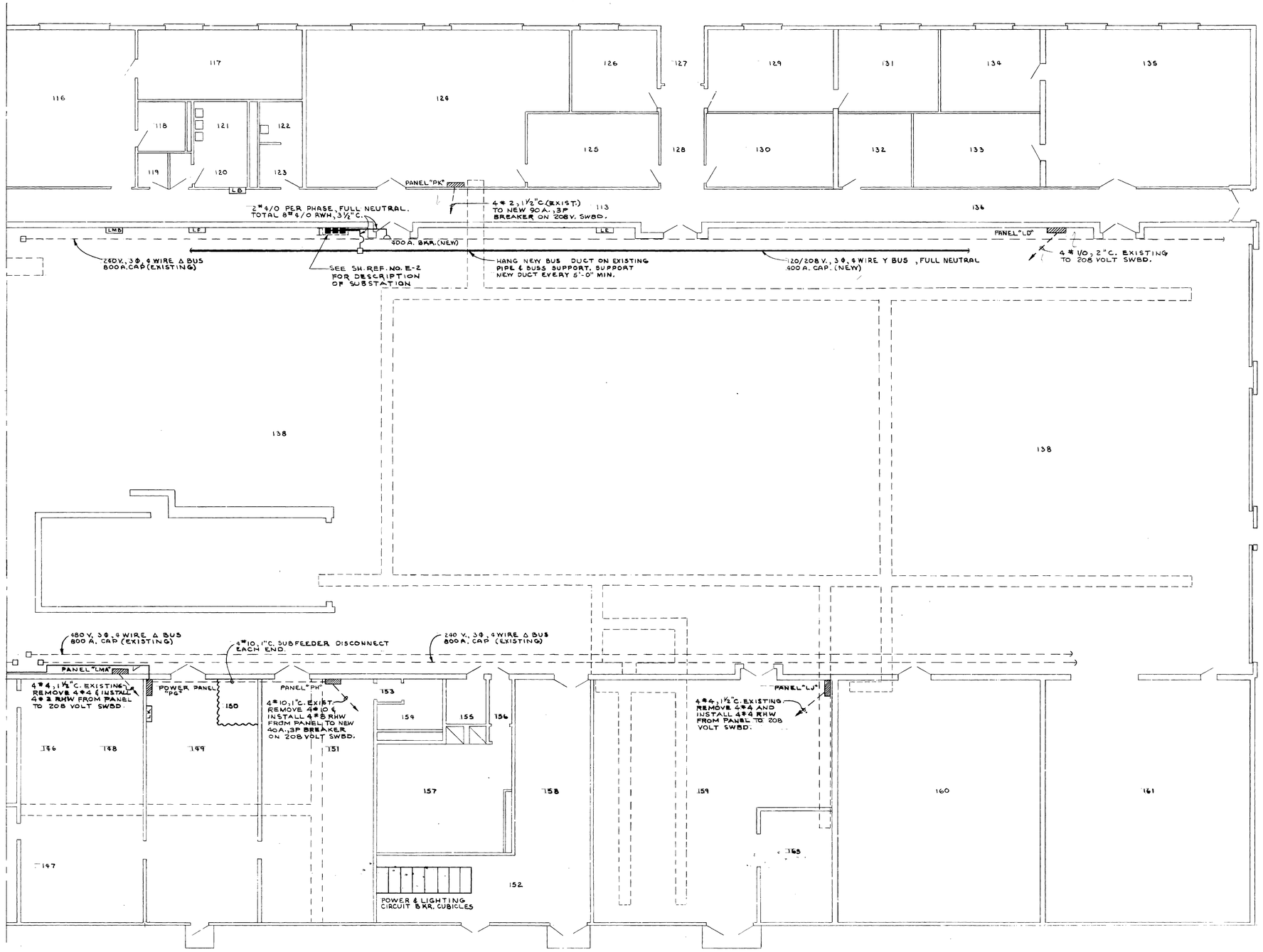

POWER PLAN - EAST END

SCALE: 1/8" = 1'-0"

SCHEDULE - PANEL "PR"
120/208 VOLT, 3 Φ, REGULATED

CIR. NO.	BKR. AMPS	NO. POLES	TYPE LOAD & LOCATION	WATTS A	WATTS B	WATTS C
1	20	1		400		
2				400		
3					400	
4					400	
5						400
6						400
7-36	20	1	SPARES FOR FUTURE USE	4000	4000	4000
TOTALS				4800	4800	4800
TOTAL PANEL LOAD IN WATTS				14,400		

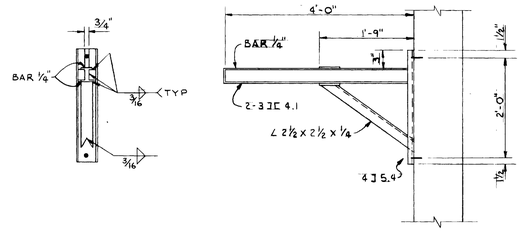

TYPICAL BUS DUCT SUPPORT

SCALE: 3/4" = 1'-0"

SUPPLEMENTARY LEGEND

FOR OTHER SYMBOLS SEE CORPS OF ENGINEERS DRAWING 40-06-04 MDO-SH. 1

- D — FLOODLIGHT - MOUNTING HEIGHT AS NOTED OR DETAILED.
- S — MANUAL STARTING SWITCH FOR SINGLE PHASE FRACTIONAL HORSE POWER MOTORS. SINGLE POLE, 125 V., WITH THERMAL OVERLOAD UNIT RATED AT 110% OF MOTOR NAMEPLATE RATING. EQUAL TO ALLEN-BRADLEY BULLETIN 600.
- ⊠ — INDUSTRIAL CIRCUIT BREAKER IN NEMA TYPE 1 ENCLOSURE
- G — SPECIAL GROUND TERMINAL PER DETAIL.
- ---- — BARE GROUNDING CONDUCTOR. SIZE AS INDICATED ON DRAWING.
- —o — CONDUIT UP
- —• — CONDUIT DOWN
- ═══ — PLUG-IN BUS DUCT, SIZE AS INDICATED ON DRAWING.
- ═══o — PLUG-IN CIRCUIT BREAKER UNIT. SIZE AS INDICATED ON DRAWING.
- ═══→ — PLUG-IN DUCT END ENCLOSURE.
- ⊛ — GROUNDING PLATE, BURNDY TYPE GFG OR EQUAL.
- ⊠ — COMBINATION THERMAL MAGNETIC BREAKER & MAGNETIC MOTOR STARTER WITH THERMAL OVERLOADS. ADDITION OF LETTER AND/OR NUMERAL PRIMES AND SUBSCRIPTS TO THE BASIC SYMBOL INDICATE THE FOLLOWING: NUMERAL INDICATES NEMA SIZE.
- ⊠ — THERMAL MAGNETIC BREAKER CONTACTOR.
- (S) — MOTOR HORSEPOWER AND IDENTIFICATION NOTED.
- — TRANSFORMER, DESCRIPTION AS NOTED.

FIXTURE SYMBOLS AND DESCRIPTIONS

A - INDUSTRIAL TYPE OPEN END PENDANT MOUNTED SLIMLINE FIXTURE WITH 2-96" T-12 74 W. STANDARD WARM WHITE LAMPS, HIGH P.F. LEAD LAG TWO-LAMP 425 MA BALLAST FOR OPERATION ON 120 V.A.C. FIXTURE, SIMILAR TO TYPE "F" DWG. 40-06-04 SHT. 43, AND TO BE EQUIPPED WITH "SNAP-ON" TYPE EGG CRATE LOUVER PROVIDING APPROXIMATELY 23"-23" SHIELDING. CEILING MOUNTED.

B - SAME AS "A" EXCEPT W/4-96" T12, 74 W. LAMPS, 2-TWO LAMP 425 MA BALLAST. CEILING MOUNTED.

C - SAME AS "B" EXCEPT W/4 T-12, 40 W. LAMPS STANDARD COOL WHITE. CEILING MOUNTED.

REVISION	DATE	DESCRIPTION	BY	BY	BY
	JULY '61	F.C.V. AS BUILT, CONTRACT DA-01-076-ENG-4265 RESIDENT ENG			F

CORPS OF ENGINEERS, U. S. ARMY
OFFICE OF THE DISTRICT ENGINEER
MOBILE, ALA.

U.S. ARMY ORDNANCE CORPS - REDSTONE ARSENAL - HUNTSVILLE, ALA.
ARMY BALLISTIC MISSILE AGENCY
ADDITION TO STRUCTURES & MECHANICS BLDG. 4619
VIBRATION EXCITER FACILITY
ELECTRICAL PLAN

DRAWN BY: J.W.A.
TRACED BY:
CHECKED BY: A.W.S.
SUBMITTED BY: CHIEF, ELECTRICAL SECTION
APPROVED: CHIEF, ENGINEERING DIVISION
APPROVED: COLONEL, CORPS OF ENGINEERS, DISTRICT ENGINEER
DATE: MAY, 1960
APPROVED: CHIEF, ENGINEERING DIVISION
DATE: MAY, 1960
SCALE: AS SHOWN
FILE NO. RED-11214
SPEC. NO.
DRAWING NO. 4619
SHEET 82 OF

SHEET REF. NO. E-3

FIRST AID
LITTLE INJURIES CAN LEAD TO BIG INFECTIONS

60-09-15
SH 10

22 SEP 1961

MSEC MASTER BID DISK 11-18-2013

Distagon N. O. 138-MW-3 "Ageproof"

DOCUMENT INPUT RECORD - MSFC DOCUMENTATION REPOSITORY

I. GENERAL INFORMATION

1. APPROVED PROJECT:	2. DOCUMENT/ DRAWING NUMBER:	3. CONTROL NUMBER:	4. RELEASE DATE:	5. SUBMITTAL DATE:
	PE-4619-RED ~~RED-11206/11214~~		05/01/1960	11/22/2006

6. DOCUMENT/DRAWING TITLE:	7. REPORT TYPE:
ADDITION TO BUILDING 4619	

8. CONTRACT NUMBER / PERFORMING ACTIVITY:	9. DRD NUMBER:	10. DPD / DRL / iDRD NUMBER:
NNM05AB09C		

11. DISPOSITION AUTHORITY (Check One):	12. SUBMITTAL AUTHORITY:	13. RELEASING AUTHORITY:
☐ Official Record - NRRS _____ ☒ Reference Copy - NRRS 8/5/A/3 (destroy when no longer needed)	KAREN FRANCIS / SEI AS22	

14. SPECIAL INSTRUCTIONS:

15. CONTRACTOR/SUBMITTING ORGANIZATION, ADDRESS AND PHONE NUMBER:	16. ORIGINATING NASA CENTER:
KAREN FRANCISSEI GROUP / AS22 BUILDING 4241, ROOM116 MSFC, AL 35/12 (256)-544-7942	17. OFFICE OF PRIMARY RESPONSIBILITY:

18. PROJECT CODE:	19. NUMBER OF PAGES:
02400	~~9~~ 13

II. ENGINEERING DRAWINGS

20. REVISION:	21. ENGINEERING ORDER:	22. PARTS LIST:	23. CCBD:
1,2			

III. REPORTS, SPECIFICATIONS, ETC.

24. REVISION:	25. CHANGE:	26. VOLUME:	27. BOOK:	28. PART:	29. SECTION:

30. ISSUE:	31. ANNEX:	32. SCN:	33. DCN:	34. AMENDMENT:

35. APPENDIX:	36. ADDENDUM:	37. CCBD:	38. CODE ID:	39. IRN:

IV. EXPORT AND DISTRIBUTION RESTRICTIONS

☐ Privacy Act (see MWI 1382.1)
☐ Proprietary (see MPD 2210.1, MPR 7120.3)
☐ Patent (see MPR 2220.1)
☐ ITAR (see MPR 2220.1, MPD 2190.1)
☐ EAR (see MPR 2220.1, MPD 2190.1)
☐ Other ACI (see NPR 1600.1, MPR 1600.1) _____
☒ No statutory or institutional restrictions applicable -- material may be electronically distributed to user in the NASA domain

V. DOCUMENTATION SUBMITTER (NASA OR CONTRACTOR)

40. ORG. CODE:	41. PHONE NUMBER:	42. NAME:	43. SIGNATURE/DATE:
SEI (AS22)	(256) 544-7942	KAREN FRANCIS	11/22/06

VI. TO BE COMPLETED BY MSFC DOCUMENTATION REPOSITORY

MSFC MASTER BID DISK 11-18-2013

44. RECEIVED BY:	45. DATE RECEIVED:	46. WORK ORDER:
Annette Bradford	11/28/06	03-00193-7

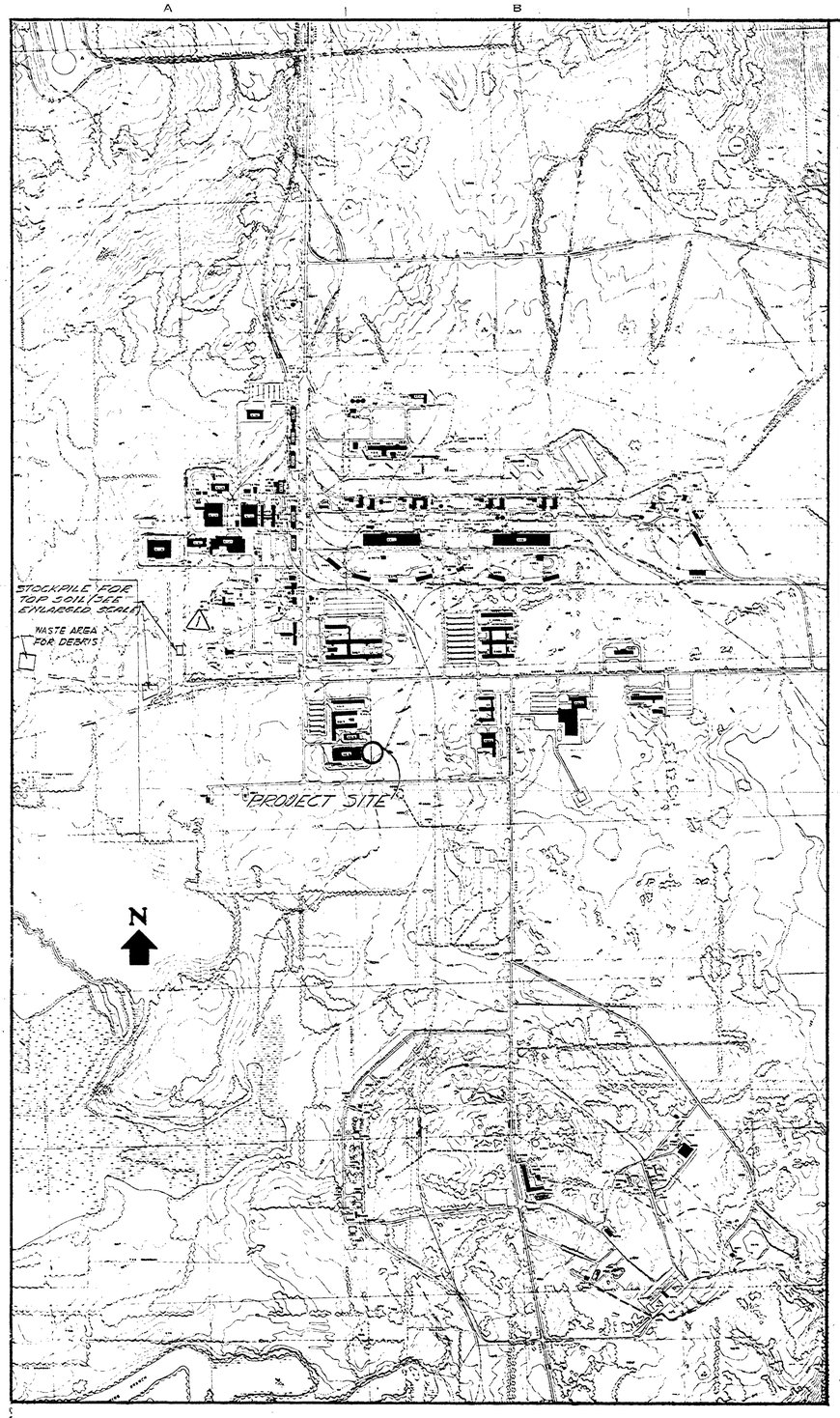

LOCATION PLAN

800' 400' 0 800' 1600'

SCALE: 1" = 800'

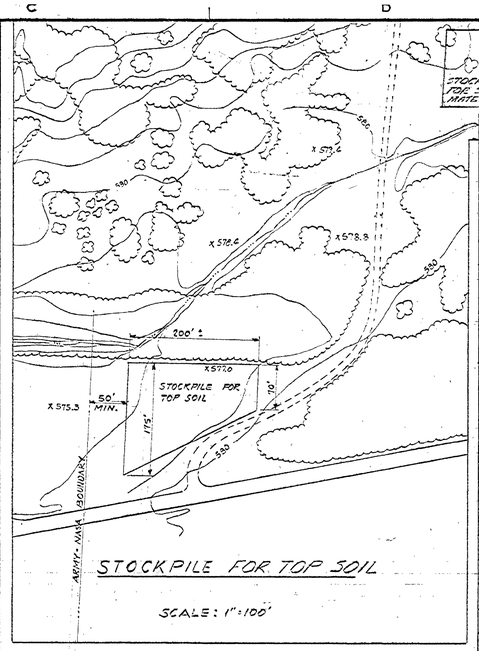

STOCKPILE FOR TOP SOIL

SCALE: 1":100'

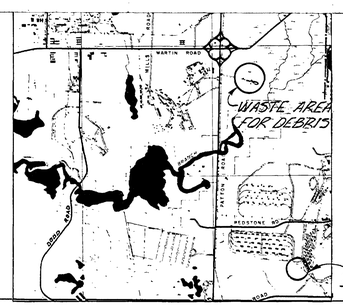

DRAWING INDEX

BUILDING NO.

FILE NO.	DRAWING NO.	SHEET NO.	TITLE
7380	FE-C-4619-C1		DRAWING INDEX SHEET
7381	FE-C-4619-C2		PAVING, GRADING, DRAINAGE & UTILITIES
7382	FE-C-4619-C3	SHEET 1	LOGS OF SOIL BORINGS
7383	FE-C-4619-C4	SHEET 2	LOGS OF SOIL BORINGS, PLAN AND PROFILE
7396	FE-C-4619-S1		FOUNDATION - PLAN & SECTIONS
7397	FE-C-4619-S2		FLOOR PLAN & SECTIONS
7398	FE-C-4619-S3	SHEET 1	FOUNDATION - SECTIONS & DETAILS
7399	FE-C-4619-S4	SHEET 2	FOUNDATION SECTIONS & DETAILS
7427	FE-C-4619-P1		PIPING - COMPOSITE ARRANGEMENT - PLANS
7428	FE-C-4619-P2		PIPING - MISCELLANEOUS PLANS, SECTIONS & DETAILS
7447	FE-C-4619-E1		ELECTRICAL PLOT PLAN & DETAILS; 4160 V. POWER SUPPLY
	MSFC-STD. DWG.		MISCELLANEOUS DRAINAGE AND PAVING DETAILS
	MSFC-STD. MISC.		WATER DISTRIBUTION, GAS DISTRIBUTION AND SANITARY SEWERS
	MSFC-STD. MISC.		STANDARD PROTECTION FENCE AND DETAILS TYPE-FE-5,6,7
			REFERENCE DRAWINGS
7384	FE-C-4619-A1		PARTIAL BASEMENT & GROUND FLOOR PLANS
7391	FE-C-4619-A8		DOOR & WINDOW DETAILS

1 MSFC APPROVED Relocated Waste Material Storage Area 5513-11 WFD

REV. BY DATE CI NO. APPROVED

NATIONAL AERONAUTICS AND SPACE ADMINISTRATION — M S F C HUNTSVILLE, ALABAMA

VITRO ENGINEERING COMPANY — NEW YORK

ADDITION TO BLDG. 4619 - LOAD TEST ANNEX

DRAWING INDEX SHEET

NASA AE CONT. NO. 8-2145		FILE NO. MSFC 7380
SUBMITTED: CHIEF DESIGNER: AE: DATE: 25 MAY 62	APPROVAL RECOMMENDED: LABS DATE: 6/27/62	APPROVED: CHIEF, ENGINEERING BRANCH NASA DATE:
DESIGNED DRAWN D.C. 5-25-62 CHECKED	APPROVAL RECOMMENDED: CHIEF, DESIGN SECTION DESIGN DATE:	DRWG. NO. FE-C-4619-C-1
SCALE: NONE	SPEC. NO. 215	

APPROVED FOR SAFETY — DEN. KYSER, SAFETY OFFICE — DATE

MSFC MASTER BID DISK 11-18-2013

MSFC-FORM 232 (REV. DEC., 1960)

JOB 1412

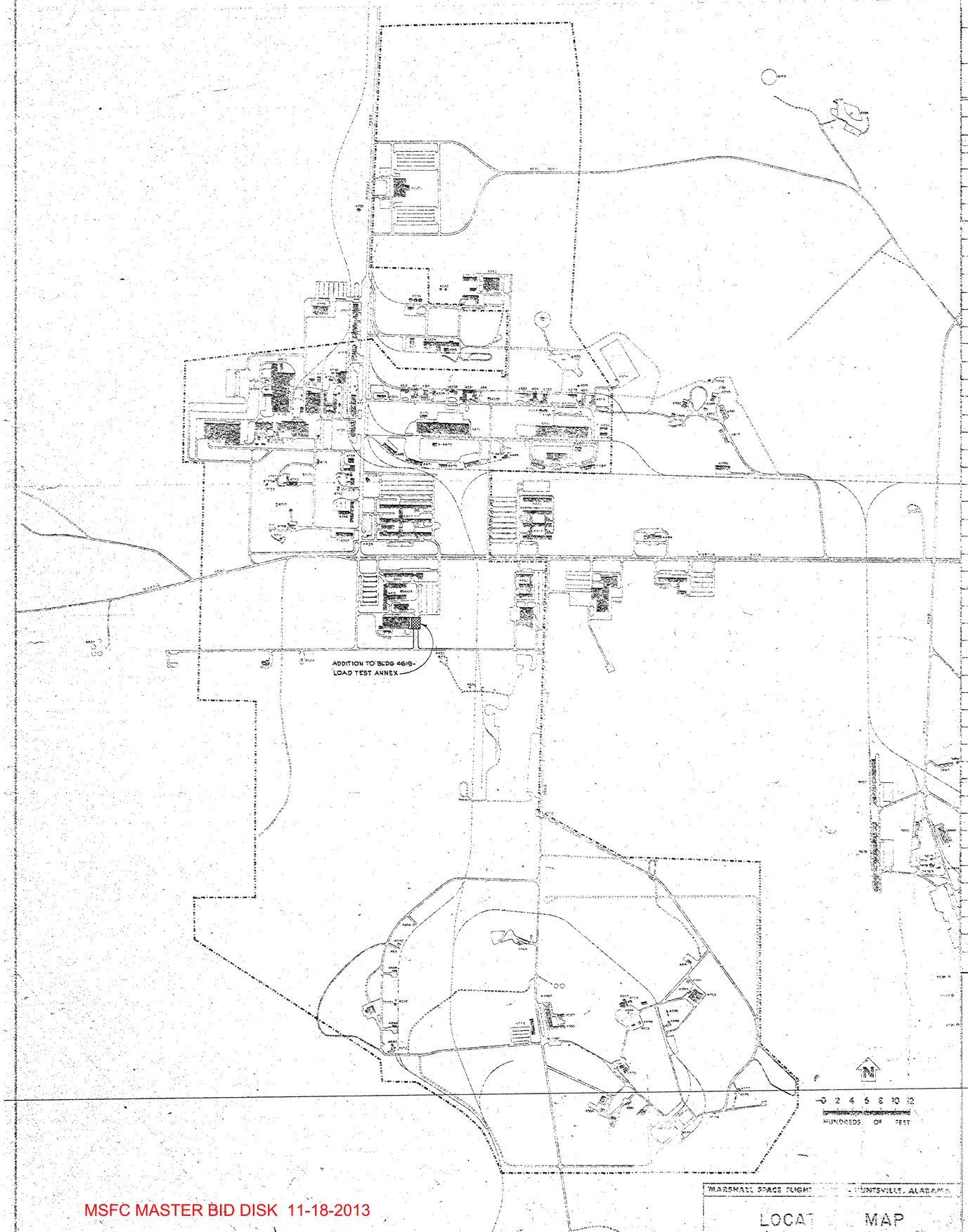

DRAWING INDEX

BUILDING NO.

FILE NO.	DRAWING NO.	SHEET NO.	TITLE
7380.1	FE-C-4619-C-1	SHEET 2	DRAWING INDEX SHEET
7380.2	FE-C-4619-C-1	SHEET 3	DRAWING INDEX SHEET
7466	FE-C-4619-C-5		FENCING AND GRASSING PLAN
7384	FE-C-4619-A-1		PARTIAL BASEMENT AND GROUND FL. PLANS
7385	FE-C-4619-A-2		ROOF AND H.V.A.C. ROOM PLANS.
7386	FE-C-4619-A-3		NORTH AND EAST ELEVATIONS
7387	FE-C-4619-A-4		SOUTH AND WEST ELEVATIONS
7388	FE-C-4619-A-5		SECTION "1-1"
7389	FE-C-4619-A-6		WALL SECTIONS AND DETAILS
7390	FE-C-4619-A-7		STAIR DETAILS - STAIR Nos 1, 2, 3 AND 4
7391	FE-C-4619-A-8		DOOR AND WINDOW DETAILS
7392	FE-C-4619-A-9		DOOR AND FINISH SCHEDULES AND REFLECTED CEILING PLAN
7393	FE-C-4619-A-10		MISCELLANEOUS DETAILS
7394	FE-C-4619-A-11		SECTION "2-2" AND SECTIONAL PLAN "19-19"
7400	FE-C-4619-S-5		TEST TOWER - TOWER STRESS SHEET AND ELEVATIONS
7401	FE-C-4619-S-6		TEST TOWER - MISCELLANEOUS SECTIONS AND DETAILS
7402	FE-C-4619-S-7		TEST TOWER - CROSSHEAD FRAMING PLAN AND SCHEDULE
7403	FE-C-4619-S-8		TEST TOWER - CROSSHEAD SECTIONS AND DETAILS
7404	FE-C-4619-S-9		CATWALKS, PLATFORM, STAIRS AND ELEVATOR DETAILS
7405	FE-C-4619-S-10		CATWALKS, PLATFORM, STAIRS AND ELEVATOR DETAILS
7406	FE-C-4619-S-11		CATWALKS, PLATFORM, STAIRS AND ELEVATOR DETAILS
7407	FE-C-4619-S-12		BUILDING ANNEX - HIGH BAY - ROOF FRAMING PLANS AND DETAILS
7408	FE-C-4619-S-13		BUILDING ANNEX - HIGH BAY NORTH AND SOUTH ELEVATIONS
7409	FE-C-4619-S-14		BUILDING ANNEX - HIGH BAY EAST AND WEST ELEVATIONS
7410	FE-C-4619-S-15		BUILDING ANNEX - HIGH BAY - TYPICAL SECTION AND HORIZONTAL TRUSSES
7411	FE-C-4619-S-16		BUILDING ANNEX - LOW BAY - FRAMING PLAN SECTIONS AND DETAILS
7412	FE-C-4619-S-17		BUILDING ANNEX - COLUMN SCHEDULE, SECTIONS AND DETAILS
7413	FE-C-4619-S-18		BUILDING ANNEX - MISCELLANEOUS DETAILS
7414	FE-C-4619-M-1		BRIDGE CRANES CLEARANCES AND COVERAGE
7415	FE-C-4619-M-2		CROSSHEAD JACKING MECHANISM
7416	FE-C-4619-AC-1		HVAC - FLOW AND CONTROL DIAGRAMS
7417	FE-C-4619-AC-2		HVAC - DUCTWORK AND PIPING BASEMENT PLAN
7418	FE-C-4619-AC-3		HVAC - DUCTWORK AND PIPING GROUND FLOOR PLAN
7419	FE-C-4619-AC-4		HVAC - DUCTWORK AND PIPING - H. AND V. EQUIP. ROOM AND LOW ROOF PLAN
7420	FE-C-4619-AC-5		HVAC - DUCTWORK AND PIPING HIGH BAY - 120'-0", 40'-0", 60'-0" AND 80'-0" LEVELS
7421	FE-C-4619-AC-6		HVAC - DUCTWORK AND PIPING HIGH BAY - GROUND FL., 100'-0" LEVEL AND ROOF
7422	FE-C-4619-AC-7		HVAC - PIPING HIGH BAY - SOUTH AND EAST ELEV'S
7423	FE-C-4619-AC-8		HVAC - DUCTWORK AND PIPING DETAILS AND EQUIPMENT
7424	FE-C-4619-AC-9		HVAC - PIPING HIGH BAY - NORTH AND WEST ELEVATIONS
7425	FE-C-4619-AC-10		HVAC - EQUIPMENT SCHEDULE

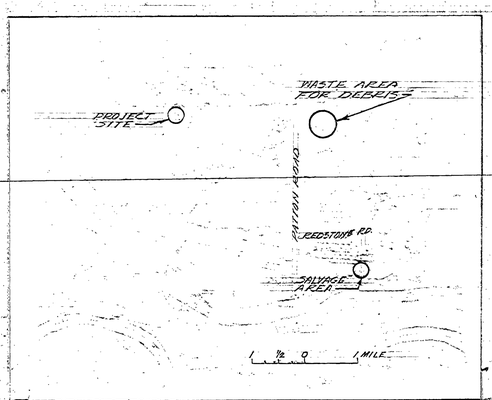

MARSHALL SPACE FLIGHT ... HUNTSVILLE, ALABAMA

LOCAT ... MAP

AS BUILT

STY.	BY	DATE	C.I. NO.	APPROVED

NATIONAL AERONAUTICS AND SPACE ADMINISTRATION — M S F C HUNTSVILLE, ALABAMA

ADDITION TO BLDG. 4619 LOAD TEST ANNEX

DRAWING INDEX SHEET - SHEET No. 2

NASA AE CONT. NO. NASA 8-2145

FILE NO. MSFC 7380-1

SUBMITTED: H. F. Mauger, CHIEF, A.E. DATE: SEPT. 14, 1962

APPROVAL RECOMMENDED: J. Saucier, CHIEF, DESIGN SECTION, DESIGN DATE: 10-22-62

APPROVED: Hudspeth, CHIEF, ENGINEERING BRANCH, NASA DATE: 10-25-62

DESIGNED: DRAWN: J.J. Sims Sr. CHECKED: REP

SCALE: 1/16" SCALE

SPEC. NO. FE-D-303

DRWG. NO. FE-C-4619-C-1 SHEET 2

MSFC MASTER BID DISK 11-18-2013

FORM No. 1000.807-0

DRAWING INDEX

BUILDING NO.

FILE NO.	DRAWING NO.	SHEET NO.	TITLE
7429	FE-C-4619-P-3		PIPING ARRANGEMENT - PLANS AND SECTIONS
7430	FE-C-4619-P-4		HYDRAULIC PIPING SYSTEM
7431	FE-C-4619-E-1		ELECTRICAL - ONE LINE DIAGRAM
7432	FE-C-4619-E-2		ELECTRICAL - CONDUIT AND GROUNDING - BASEMENT PLAN SECTS., AND DETAILS
7433	FE-C-4619-E-3		ELECTRICAL - CONDUIT AND GROUNDING PLAN - TEST AREA EL. 581'-0" AND COMPUTER ROOM
7434	FE-C-4619-E-4		ELECTRICAL - CONDUIT AND GROUNDING PLAN - FAN ROOM AND ROOF AND AIR COMPRESSOR ROOM BLDG. 4619
7435	FE-C-4619-E-5		ELECTRICAL - 600 VOLT INFRARED BUS DUCT EXTENSION
7436	FE-C-4619-E-6		ELECTRICAL - LIGHTING AND POWER PLAN - TEST AREA EL. 601'-0", 621'-0" AND 641'-0"
7437	FE-C-4619-E-7		ELECTRICAL - LIGHTING AND POWER PLAN - TEST AREA EL. 661'-0 AND 681'-0"
7438	FE-C-4619-E-8		ELECTRICAL - TROUGH DETAILS - NE AND NW TOWERS
7439	FE-C-4619-E-9		ELECTRICAL - POWER AND LIGHTING - CROSSHEAD
7440	FE-C-4619-E-10		ELECTRICAL - MISC DETAILS AND SECTIONS
7441	FE-C-4619-E-11		ELECTRICAL - SCHEMATIC WIRING DIAGRAMS - HVAC SYSTEMS
7442	FE-C-4619-E-12		ELECTRICAL - SCHEMATIC WIRING DIAGRAM - CROSSHEAD POSITIONING SYSTEM
7443	FE-C-4619-E-13		ELECTRICAL - LIGHTING PLAN - BASEMENT AND TUNNEL
7444	FE-C-4619-E-14		ELECTRICAL - LIGHTNG AND COMMUNICATION PLAN - OFFICE, COMPUTER ROOM AND INSTRUMENT ROOM
7445	FE-C-4619-E-15		ELECTRICAL - LIGHTING PLAN - FAN LOFT
7446	FE-C-4619-E-16		ELECTRICAL - LIGHTING TEST AREA - ELEV. 581'-0"
7447	FE-C-4619-E-17		ELECTRICAL - PLOT PLAN AND DETAILS 4160V POWER SUPPLY
7448	FE-C-4619-E-18		ELECTRICAL - LIGHTING - TOWER FLOOR LIGHTING
7452	FE-C-4619-I-1		INSTRUMENTATION - CONNECTOR BOX DETAILS AND WIRING
7453	FE-C-4619-I-2		INSTRUMENTATION - TELEVISION AND COMMUNICATIONS SYSTEM
7454	FE-C-4619-I-3		INSTRUMENTATION - ELECTRONIC TEST BENCH DETAILS AND WIRING
	MSFC-STD-900		PROTECTION FENCE AND DETAILS TYPE FE-S.C.T.
7381	* FE-C-4619-C-2		PLAN - PAVING, GRADING, DRAINAGE AND UTILITIES
7396	* FE-C-4619-S-1		FOUNDATION PLAN AND SECTIONS
7397	* FE-C-4619-S-2		FLOOR PLAN AND SECTIONS
7405	* FE-C-4619-S-2A		TEST TOWER COLUMNS SETTING TOLERANCES
7427	* FE-C-4619-P-1		PIPING - COMPOSITE ARRANGEMENT PLANS
7428	* FE-C-4619-P-2		PIPING - MISCELLANEOUS PLANS, SECTIONS AND DETAILS
	D-94314		ROLL RAMP
	D-94317		SPHERICAL JOINT
	R-94324		GENERAL ARRANGEMENT - DRIVE SHAFTS — PHILADELPHIA GEAR CORP. - POSITIONING SYSTEM
	R-94326		LOWER SUPPORT FOR STEM
	R-94327	SHEET-1	LAYOUT OF COVER
	R-94327	SHEET-2	LAYOUT OF COVER

MSFC MASTER BID DISK 11-18-2013

* FOR REFERENCE ONLY

AS BUILT

REV.	BY	DATE		C.I. NO.	APPROVED

NATIONAL AERONAUTICS AND SPACE ADMINISTRATION — M S F C HUNTSVILLE, ALABAMA

VITRO ENGINEERING COMPANY A DIVISION OF VITRO CORPORATION OF AMERICA NEW YORK

ADDITION TO BLDG-4619 LOAD TEST ANNEX

DRAWING INDEX SHEET - SHEET N°3

NASA AE CONT. NO. NASA 8-2145 — FILE NO. MSFC 7380.2

SUBMITTED: CHIEF — APPROVAL RECOMMENDED: — APPROVED: CHIEF, ENGINEERING DIVISION

AE. DATE: SEPT. 18, 1962 — LAB. DATE: 10-22-62 — NASA DATE: 10-25-62

DESIGNED — DRAWN: LLS — CHECKED: RCV — APPROVAL RECOMMENDED: CHIEF, DESIGN SECTION — DESIGN DATE:

SCALE: No SCALE — SPEC. NO. FE-D-303 — DWG. NO. FE-C-4619-C-1 SHEET 3

APPROVED FOR SAFETY — OCT 20 1982 DATE

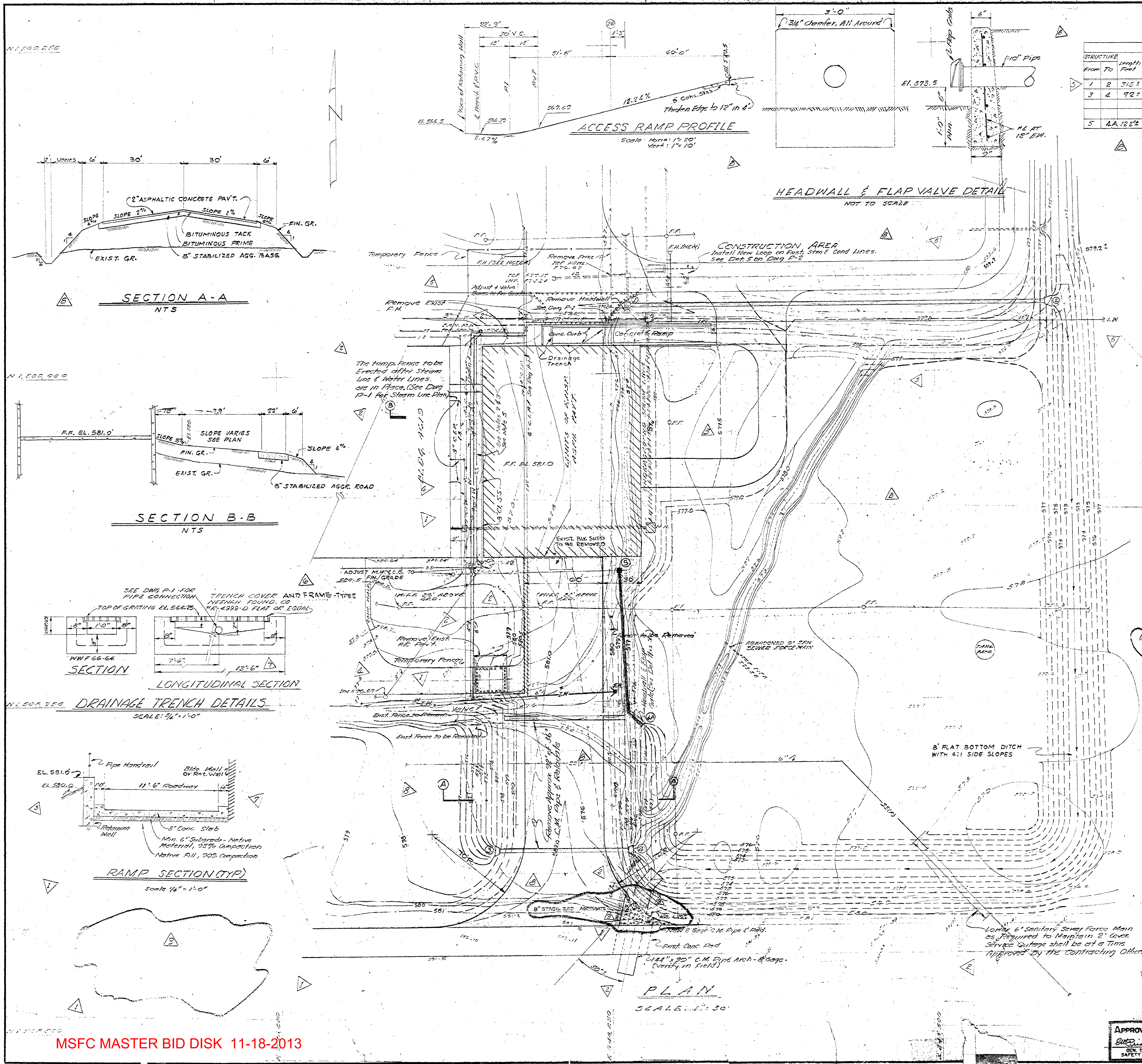

STORM DRAINAGE PIPE AND STRUCTURE SCHEDULE																				
STRUCTURE			Smooth Interior Pipe						C. M. Pipe						Structure					Remarks
From	To	Length Feet	Dia. In.	Slope %	Inv. Elev. Down Stream	Inv. Elev. Up Stream	Class	Gage C.M.	Dia. In.	Slope %	Inv. Elev. Down Stream	Inv. Elev. Up Stream	Gage	No.	Type	Top M.H. Or Grate	Type	No Gr.		
1	2	315±	30	0.14	573.00	573.40	III	14	36	0.20	572.77	573.40	14	1	INLET	577.0±	F	1		
3	4	92±	36	0.18	573.50	573.66	IV	12	36	0.34	573.90	574.20	12	2	Hdwl	577.00				
														3	"	578.45				
														4	"	578.29				
5	4A	122±	10	0.41	573.50	574.00	SD	16	10	0.46	573.50	574.00	16	5	M.H.	580.30±				

LEGEND

NEW	REMOVAL		EXISTING
W		POTABLE WATER	W
I.W.	I.W.	INDUSTRIAL WATER	I.W.
S.S.		SANITARY SEWER	S.S.
I.S.		INDUSTRIAL SEWER	I.S.
		ELECTRICAL	PP
HDWL.		STORM DRAINAGE	INLET / HDWL.
580		CONTOURS	578
ST	ST	STEAM, UNDERGROUND	ST
		A/C PAVEMENT	
	Noted	FENCE	
		STABILIZED AGGREGATE	

NOTES

1. EXISTING UTILITIES SHALL BE REROUTED AS PER DWG. NO. P-1.
2. ALL ABANDONED PORTION OF EXISTING UTILITIES AND THEIR APPURTENANCES SHALL BE REMOVED.
3. LOCATION OF TEMPORARY FENCE AND BARRICADE SHALL BE VERIFIED AND APPROVED BY CONTRACTING OFFICER.
4. NEW LOCATION OF EXISTING FIRE HYDRANT.
5. Relocate 8" Sanitary Sewer as shown. The new line shall be installed and tested prior to connecting into the existing system. Service outage shall be held to a minimum & connections shall be made at a time approved by the Contracting Officer. The old pipe shall then be removed & stored in the immediate vicinity as directed by the Contracting Officer.

REV.	BY	DATE		C.I. NO.	APPROVED	
9	JBH	11 JUNE 63	DELETION OF CONC. PAD.	5512-15	[illegible]	GES
8	JTA	28 Mar 63	Rerouted 36" Storm Drain	5512-10	WKR	GES
7	J.T.A.		Revised Width of Ramp	5512-8	WKR	GES
6	W.O.S.	12-11-62	TRENCH FRAME ADDED	5512-7	WKR	GES
5	J.T.A.	17 Oct 62	Increase Length of 30" Pipe, Fill Ditch & Adjust Valve Boxes to Fin. Grade	5512-4	WKR	[illegible]
4	J.T.A.	12 Sep 62	Re-Routed San. Sewer Line	5512-2	WKR	[illegible]
3	J.T.A.	9-10-62	Delete Conc. Walk & Ch. Inv. El. Str. #4	5512-1	WKR	[illegible]
2	J.T.A.	20 Jul 62	Lower S.S. Force Main. Ch. Location of Water Lines. Add Dimen of C.M. Pipe		WKR	[illegible]
1	JTA	6 Jul 62	Ch. Location of New Water Lines & Temp. Fence. Add Swale bet. Bldg. Add Conc. Pad.		WKR	[illegible]

APPROVED FOR SAFETY
JUN 7 1962
GEN. ENGRG SAFETY OFFICE — DATE

NATIONAL AERONAUTICS AND SPACE ADMINISTRATION
MSFC
HUNTSVILLE, ALABAMA

ADDITION TO BUILDING 4619 - LOAD TEST ANNEX
PLAN
PAVING, GRADING, DRAINAGE & UTILITIES

NASA AE CONT. NO.
FILE NO. MSFC 7381

SUBMITTED: CHIEF, CIVIL SECTION
AE: DATE:
APPROVAL RECOMMENDED:
LAB: DATE:
APPROVED: CHIEF, ENGINEERING BRANCH
NASA DATE: 6/21/62
DESIGNED
DRAWN FCH
CHECKED
APPROVAL RECOMMENDED:
CHIEF, DESIGN SECTION
DESIGN DATE:
SCALE: 1" = 30'
SPEC. NO. 215
DRWG. NO. FE-C-4619-C2

MSFC MASTER BID DISK 11-18-2013

MSFC-FORM 232 (REV. DEC., 1960)

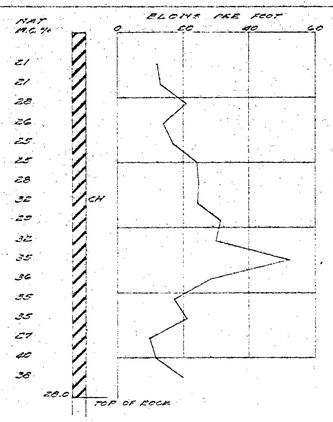

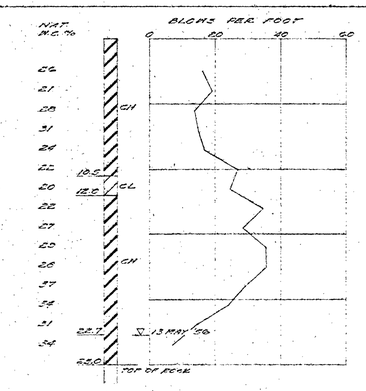

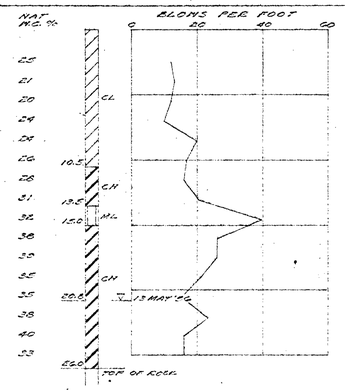

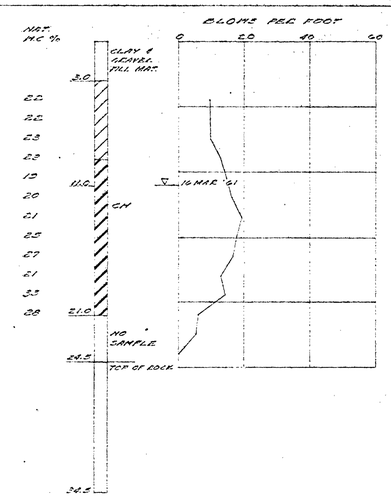

VERTICAL SCALE: 1"=5'

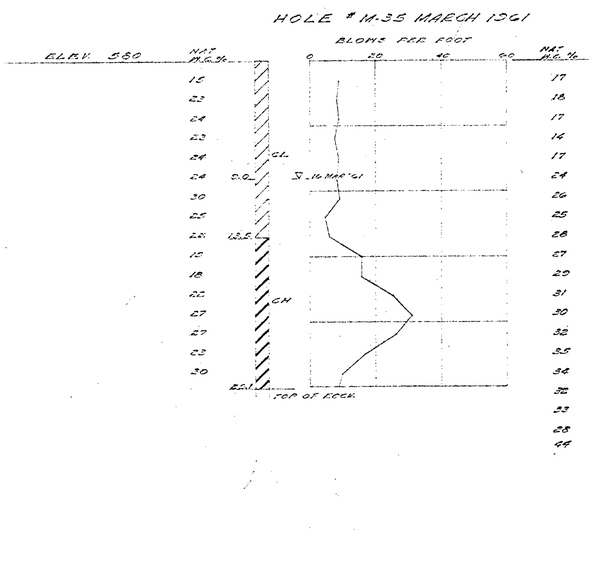

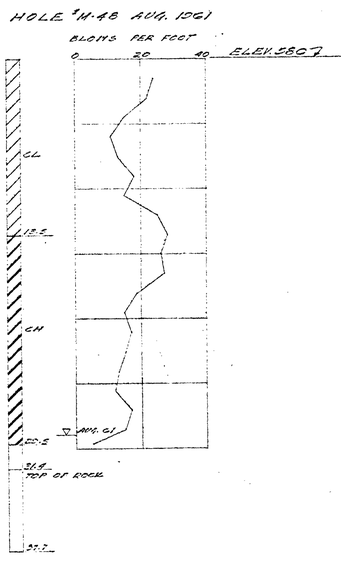

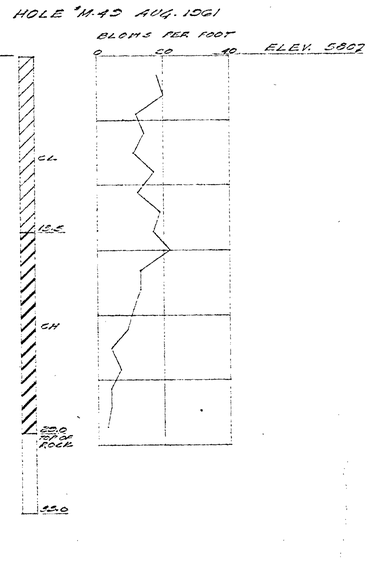

NOTES:

1. BLOWS PER FOOT ARE FROM STANDARD PENETRATION TEST WHICH IS PERFORMED BY DROPPING A WEIGHT OF 140 POUNDS FROM A HEIGHT OF 30 INCHES ON A CAP ATTACHED TO THE UPPER END OF THE DRILL RODS. A 2 INCH O.D. SPLIT SPOON IS USED ON THE LOWER END.
2. SOILS ARE CLASSIFIED IN ACCORDANCE WITH THE UNIFIED SOIL CLASSIFICATION SYSTEM, CORPS OF ENGINEERS TECHNICAL MEMORANDUM NO 3-357, VOLUME I, DATED MARCH 1953.

LEGEND

- CL — INORGANIC CLAYS OF LOW TO MEDIUM PLASTICITY GRAVELLY CLAYS, SANDY CLAYS, SILTY CLAYS, LEAN CLAYS
- CH — INORGANIC CLAYS OF HIGH PLASTICITY FAT CLAYS
- ML — INORGANIC SILTS AND VERY FINE SANDS
- ▽ — WATER TABLE AND DATE OBSERVED
- ⊗ — SOIL TEST HOLE

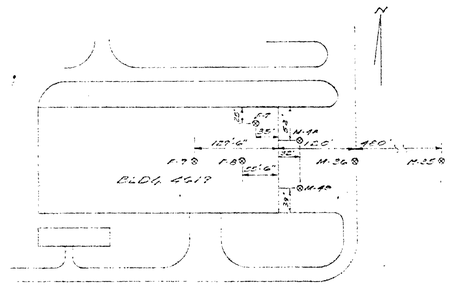

LOCATION PLAN

SCALE: 1"=100'

REV.	BY	DATE	C.I. NO.	APPROVED

NATIONAL AERONAUTICS AND SPACE ADMINISTRATION — M S F C HUNTSVILLE, ALABAMA

LOAD TEST ANNEX TO BLDG. 4619

LOGS OF SOIL BORINGS

NASA AE CONT. NO.		FILE NO. MSFC 7382
SUBMITTED: CHIEF, CIVIL SECTION; AE: DATE:	APPROVAL RECOMMENDED: CHIEF, ENGINEERING BRANCH; LAB: DATE: 6/21/62	APPROVED: CHIEF, ENGINEERING BRANCH; NASA: DATE: 6/21/62
DESIGNED; DRAWN: CSH; CHECKED: AD	APPROVAL RECOMMENDED: CHIEF, DESIGN SECTION; DESIGN DATE:	DRWG. NO. FE-C-4619-C3
SCALE: AS SHOWN	SPEC. NO. 215	

APPROVED FOR SAFETY — JUL 7 1962

MSFC MASTER BID DISK 11-18-2013

MSFC-FORM 232 (REV. DEC., 1960)

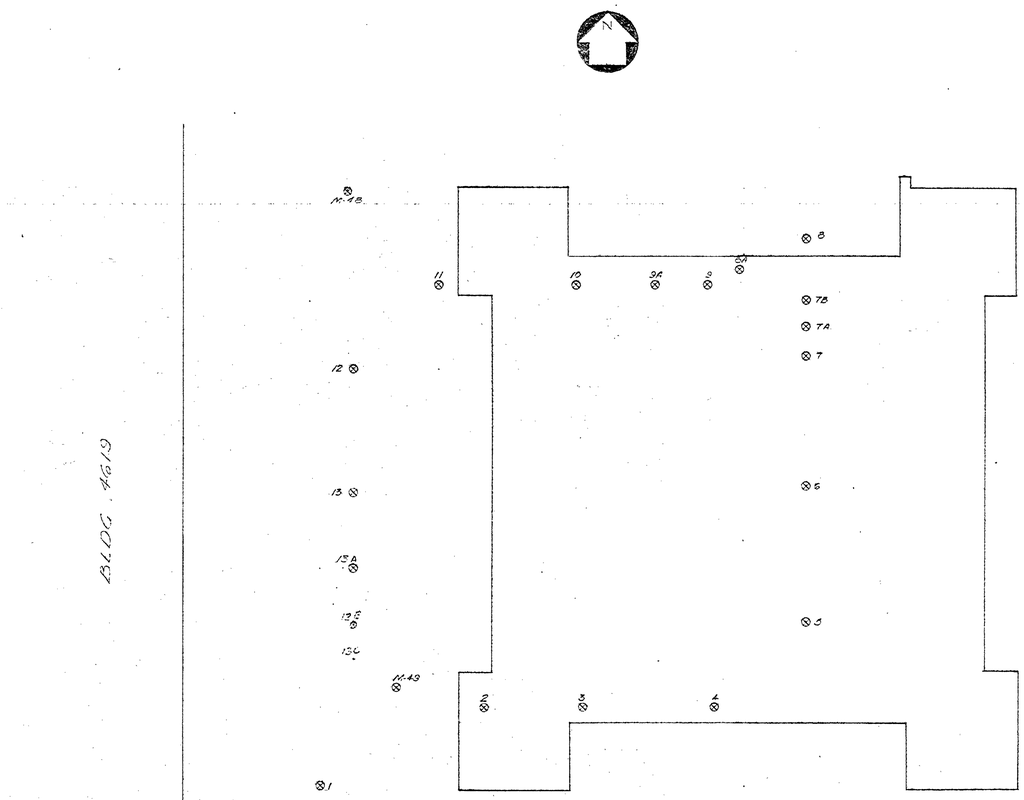

PLAN

SCALE: 1" = 10'

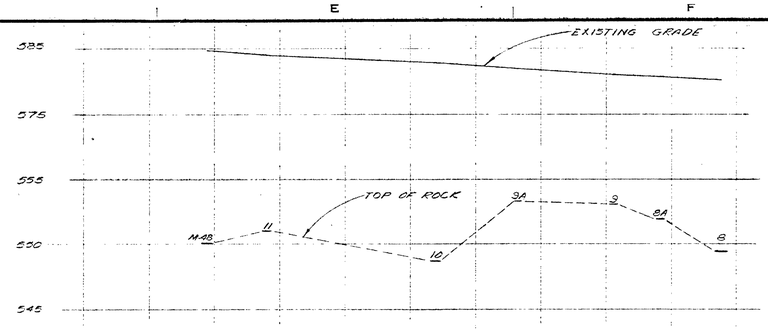

NORTH WALL

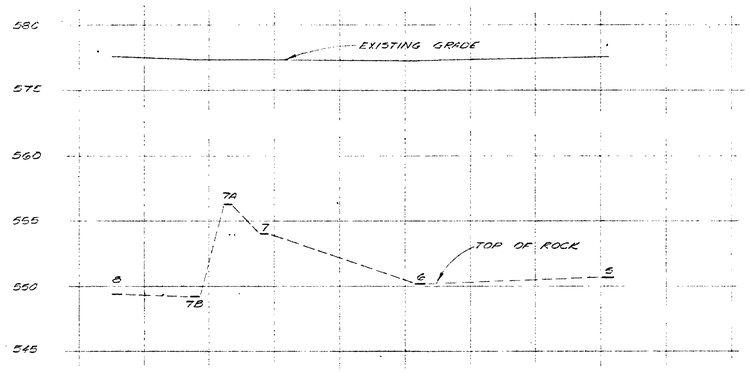

EAST WALL

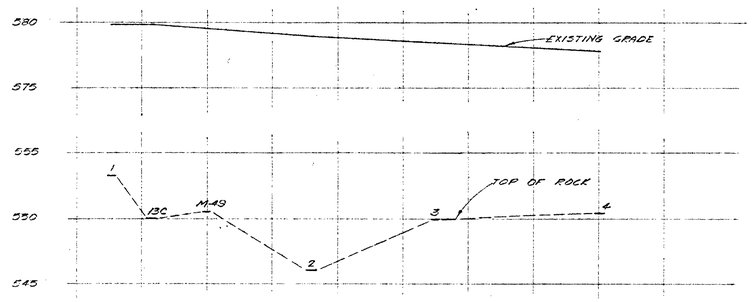

SOUTH WALL

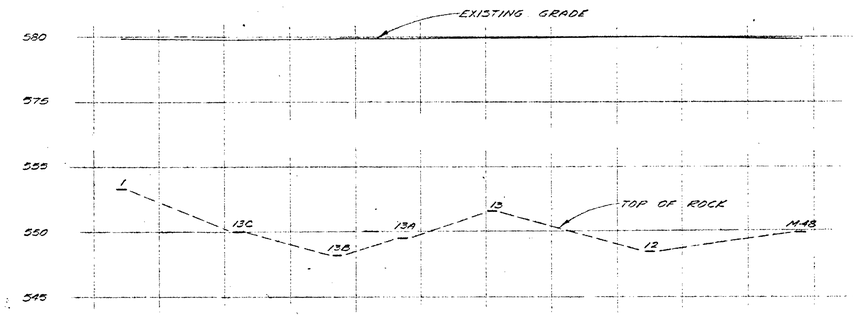

WEST WALL

PROFILE OF TOP OF ROCK

SCALE: 1"H = 8'
1"V = 5'

APPROVED FOR SAFETY

REV.	BY	DATE	C.I. NO.	APPROVED

NATIONAL AERONAUTICS AND SPACE ADMINISTRATION

M S F C
HUNTSVILLE, ALABAMA

LOAD TEST ANNEX TO BLDG 4619
LOGS OF SOIL BORINGS
PLAN AND PROFILE

NASA AE CONT. NO.

FILE NO. MSFC 7383

SUBMITTED: CHIEF CIVIL SECTION
AE: DATE:

APPROVAL RECOMMENDED: CHIEF, ENGINEERING BRANCH
LAB: DATE: 6/6/62

APPROVED: NASA: DATE: 6/5/62

DESIGNED
DRAWN M.J.K.
CHECKED

APPROVAL RECOMMENDED: CHIEF, DESIGN SECTION
DESIGN DATE:

DRWG. NO. FE-C-4619-C4

SCALE: AS SHOWN

SPEC. NO. 215

MSFC MASTER BID DISK 11-18-2013

MSFC-FORM 232 (REV. DEC., 1960)

NOTICE. — WHEN GOVERNMENT DRAWINGS, SPECIFICATIONS, OR OTHER DATA ARE USED FOR ANY PURPOSE OTHER THAN IN CONNECTION WITH A DEFINITELY RELATED GOVERNMENT PROCUREMENT OPERATION, THE UNITED STATES GOVERNMENT DOES NOT THEREBY INCUR ANY RESPONSIBILITY WHATSOEVER; AND THE FACT THAT THE GOVERNMENT MAY HAVE FORMULATED, FURNISHED, OR IN ANY WAY SUPPLIED THE SAID DRAWINGS, SPECIFICATIONS OR OTHER DATA IS NOT TO BE REGARDED BY IMPLICATION OR OTHERWISE AS IN ANY MANNER LICENSING THE HOLDER OR ANY OTHER PERSON OR CORPORATION, OR CONVEYING ANY RIGHTS OR PERMISSION TO MANUFACTURE, USE, OR SELL ANY PATENTED INVENTION THAT MAY IN ANY WAY BE RELATED THERETO.

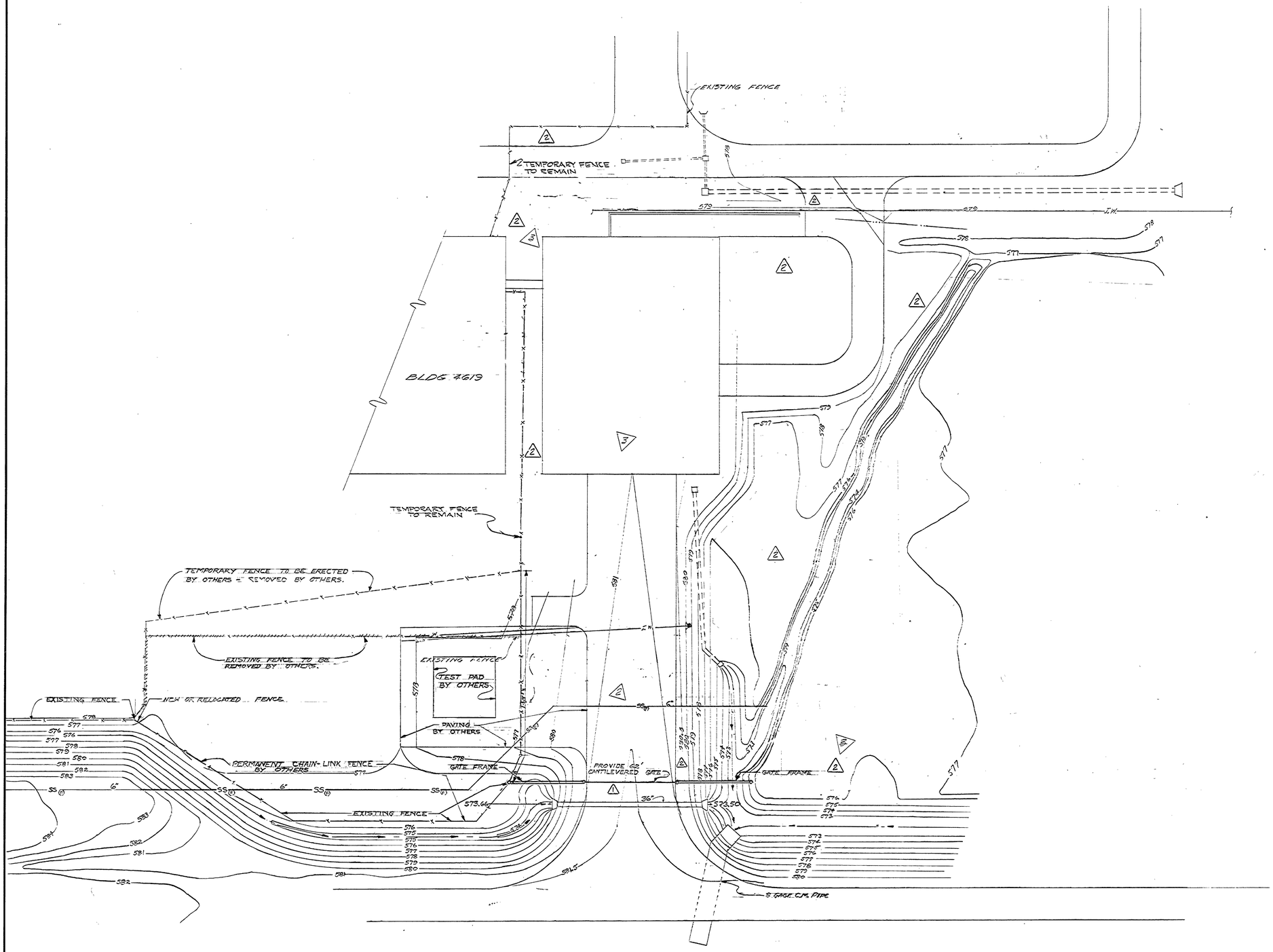

LEGEND:

- TEMPORARY FENCE TO REMAIN
- RELOCATED TEMPORARY FENCE
- EXISTING FENCE
- NEW OR RELOCATED FENCE
- EXISTING CONTOURS

NOTE:

2 THE 26' SWING GATE & PERMANENT FENCE WILL BECOME THE PROPERTY OF THE GOVERNMENT AND WILL BE STORED IN THE IMMEDIATE VICINITY.

AS BUILT

REV.	BY	DATE		C. I. NO.	APPROVED
3	J.T.A.	8-27-68	Deleted Ditch Closure & Relocating Temp Fence	5560-32	
2	J.T.A.	6-7-68	REVISED FENCING & DELETED CONC. WALK	5560-24	
1	J.B.H.	6-7-68	GATE AND FENCE RELOCATION	5560-5	

NATIONAL AERONAUTICS AND SPACE ADMINISTRATION — M S F C HUNTSVILLE, ALABAMA

ADDITION TO BUILDING 4619 LOAD TEST ANNEX FENCING & GRASSING PLAN

NASA AE CONT. NO.		FILE NO. M S F C 7466
SUBMITTED: CHIEF Civil SECTION	APPROVAL RECOMMENDED:	APPROVED:
AE. DATE:	LAB. DATE:	NASA DATE: 11-25-68
DESIGNED J.T.A. DRAWN EARR CHECKED	APPROVAL RECOMMENDED: DESIGN DATE: 11-3-68	DRWG. NO. FE-C-4619-C5
SCALE: 1"=30'	SPEC. NO. FE-D-303	

MSFC MASTER BID DISK 11-18-2013

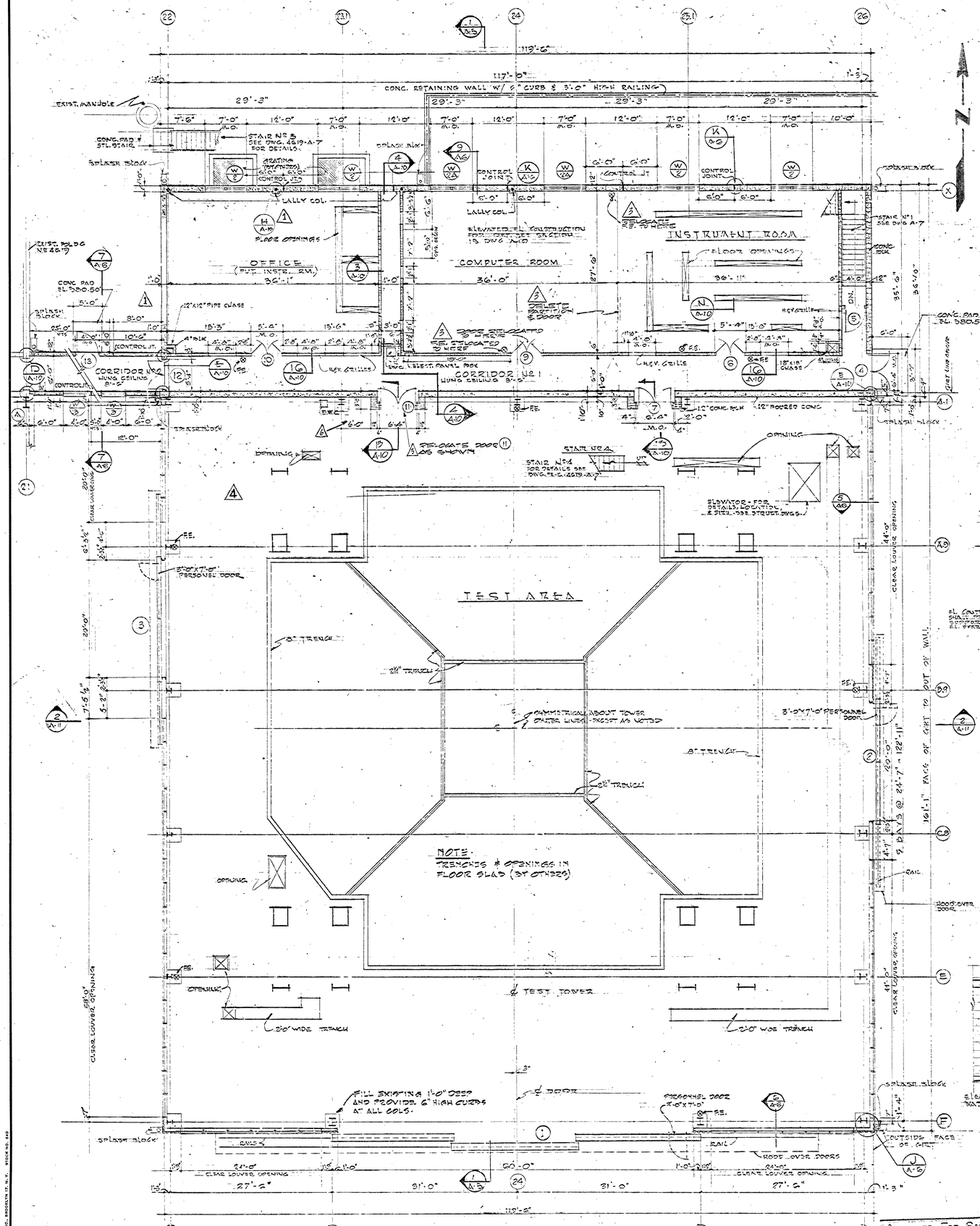

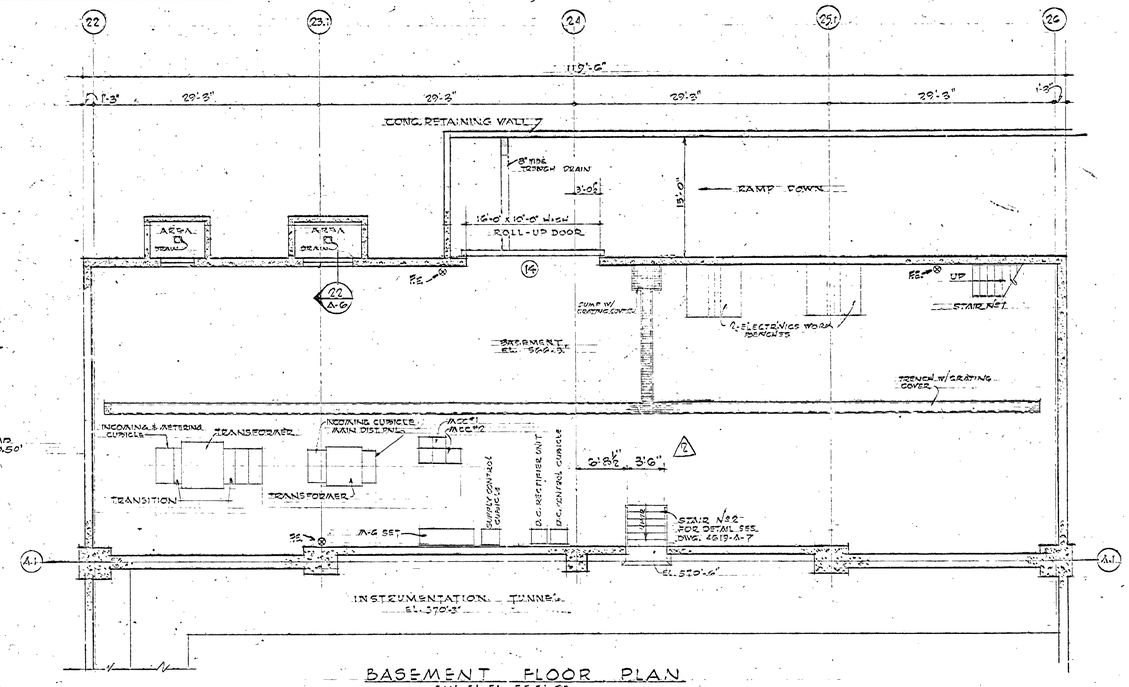

BASEMENT FLOOR PLAN

FIN. FL. EL. 566'-0"

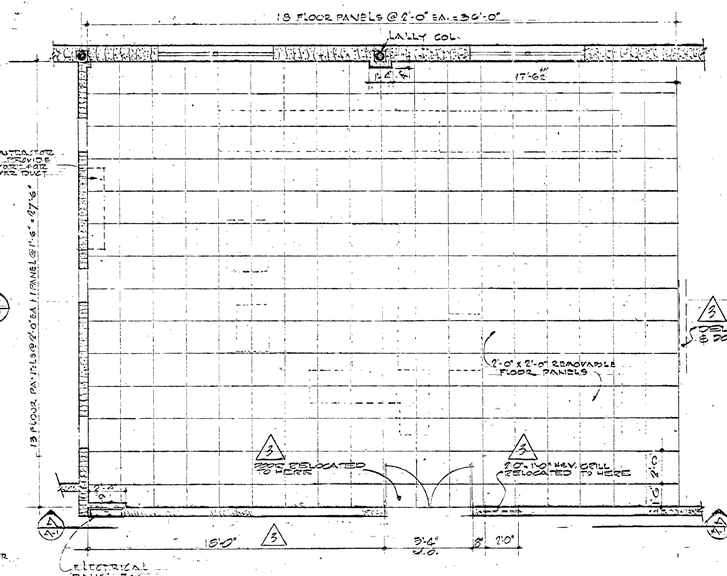

PLAN - COMPUTER ROOM

SCALE: ½"=1'-0"

ELEVATED FLOOR

(SEE DWG. FE-C-4619-A-10 FOR DETAILS)

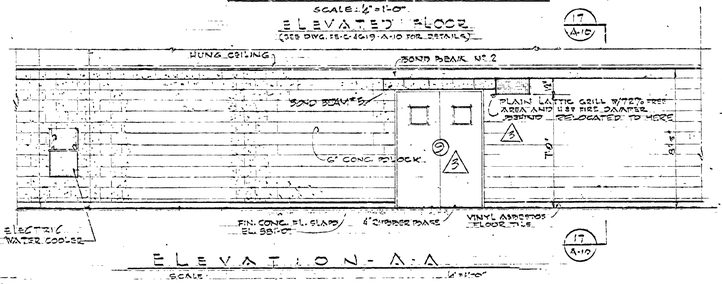

ELEVATION A-A

SCALE: ½"=1'-0"

LEGEND

	CONCRETE	H. P.	HIGH POINT
	CONCRETE BLOCK	L. P.	LOW POINT
	INSULATION	M. O.	MASONRY OPENING
	METAL (LARGE SCALE)	C. J.	CONTROL JOINT
	METAL (SMALL SCALE)	E.W.C.	ELECTRIC WATER COOLER
	15# CO² FIRE EXTINGUISHER	O.C.	ON CENTER

GENERAL NOTES

1. FOR FRAMING & LOCATIONS OF LOUVERS IN EXTERIOR SIDING SEE STRUCTURAL DRAWINGS.
2. FOR ROOF OPENINGS SIZE & LOCATIONS SEE STRUCTURAL DRAWINGS.
3. FOR PIPE PENETRATIONS FOR ROOF & WALLS SEE PIPING DRAWINGS.
4. FOR SIZE & LOCATION OF BUS-BAR OPENING SEE ELECTRICAL & STRUCTURAL DRAWINGS.
5. FOR SIZE & LOCATION OF TRENCHES & COVERS SEE STRUCTURAL DRAWINGS.
6. FOR ELEVATOR DETAILS SEE STRUCTURAL DWGS.
7. FOR DOOR BEAM SCHEDULE SEE DWG. A-10 & A-10.1
8. FOR DOOR & FINISH SCHEDULE SEE DWG. A-4 & A-8

AS BUILT

REV.	BY	DATE		C.I. NO.	APPROVED
6	SG	5-31-65	AS-BUILT		
5	DP	8-3-63	RELOCATE DOOR (11) AS SHOWN	5560-8	GDH
4	DP	8-6-63	RELOCATE DOOR 11 AS SHOWN	5560-7	GDH
3	DP	6-24-63	DELETE PARTITION & DOOR - RELOCATE DOOR, GRILL & FIRE EXT.	5560-6	GDH
2	W.O.S.	1-23-63	REVISED DWGS - BASEMENT FLOOR PLAN	C.I. 5560-1	GDH
1	W.O.S.	12-17-62	DELETED LALLY COL. CONJUNCT 23 AND ADD DET. 2BB. (AMEND No 1)	—	GDH

NATIONAL AERONAUTICS AND SPACE ADMINISTRATION — M S F C, HUNTSVILLE, ALABAMA

VITRO ENGINEERING COMPANY A DIVISION OF VITRO CORPORATION OF AMERICA NEW YORK

ADDITION TO BLDG. 4619 - LOAD TEST ANNEX

PARTIAL BASEMENT & GROUND FL. PLANS

NASA AE CONT. NO. NAS8-2145 — FILE NO. MSFC 7384

SUBMITTED: H. R. Mega 5-15-62	APPROVAL RECOMMENDED:	APPROVED:	
CHIEF, DES. ENGR. 5-15-62	N. J. Sawyer	CHIEF, ENGINEERING BRANCH	
AE: DATE: MAY 18, 1962	DATE: 10-22-62	NASA DATE: 10-25-62	
DESIGNED: R. E. J.	APPROVAL RECOMMENDED:	DRWG. NO.	
DRAWN: W.H.	CHIEF, DESIGN SECTION	FE-C-4619-A-1	
CHECKED: J. J. B.	DESIGN DATE:		
SCALE: 1/8" = 1'-0"	SPEC. NO. FE-D-303		

MSFC MASTER BID DISK 11-18-2013

Approved For Safety — OCT 20 1962 — DATE

DIETZGEN PRINTS, INC., BROOKLYN 17, N.Y. STOCK NO. 449

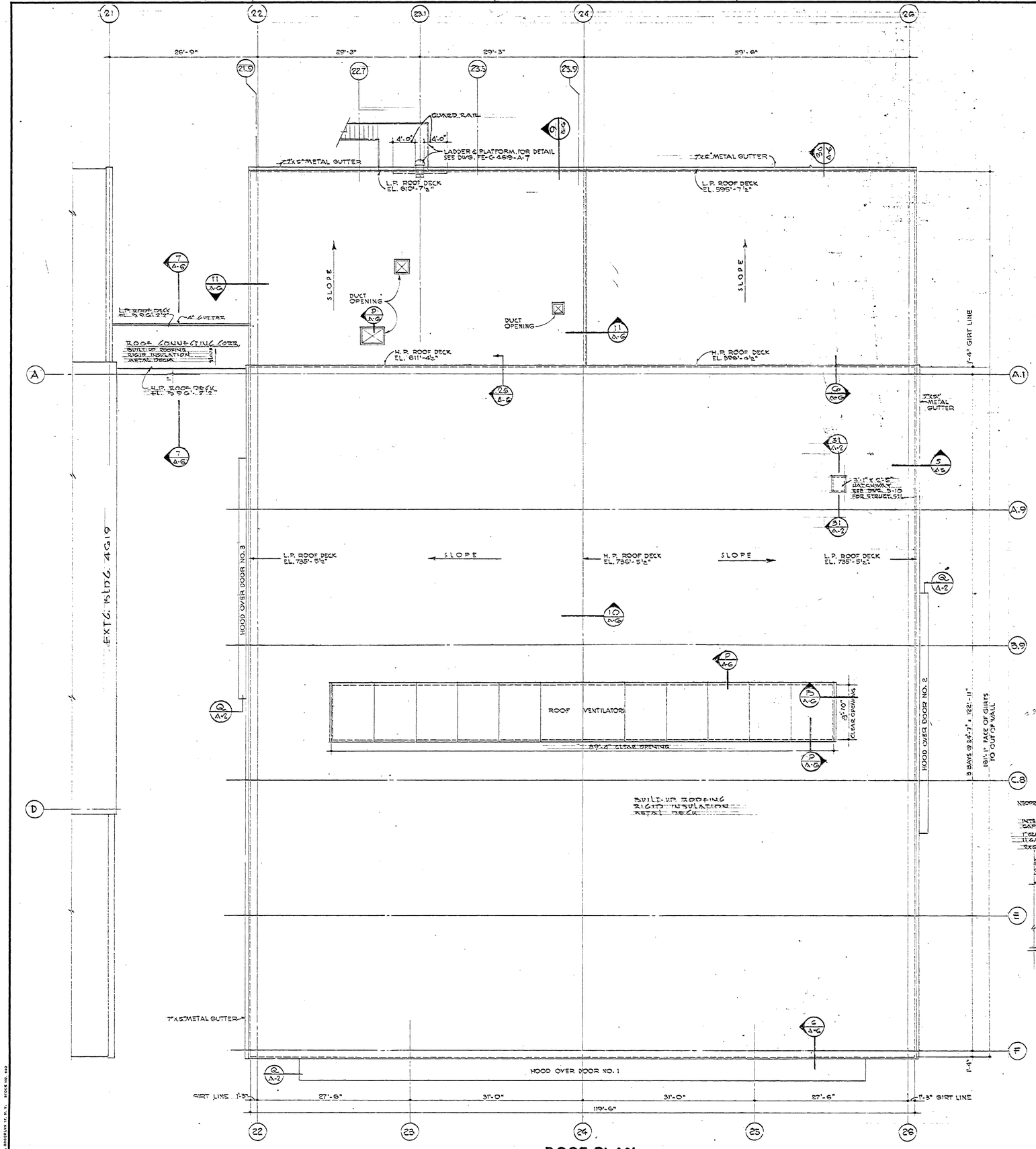

ROOF PLAN

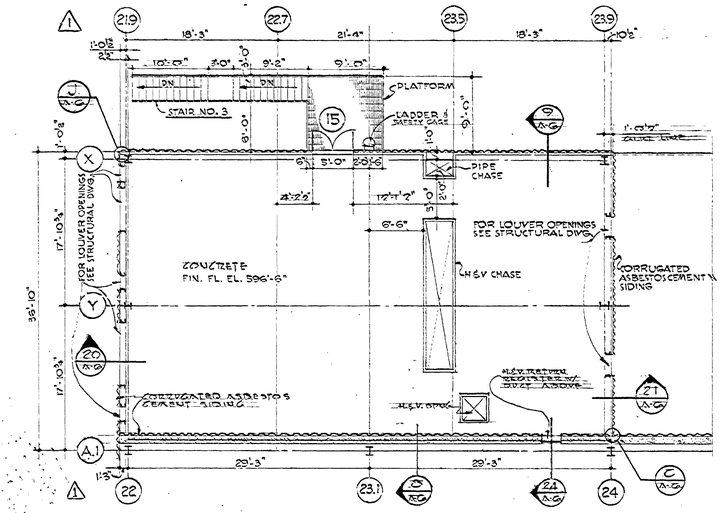

H & V EQUIPMENT ROOM PLAN

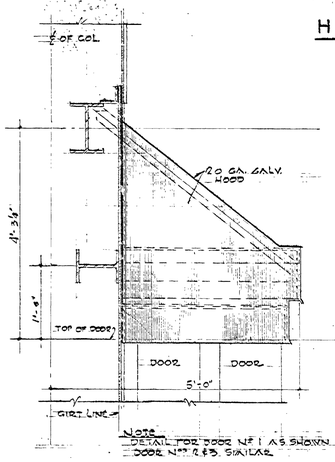

END VIEW OF HOOD

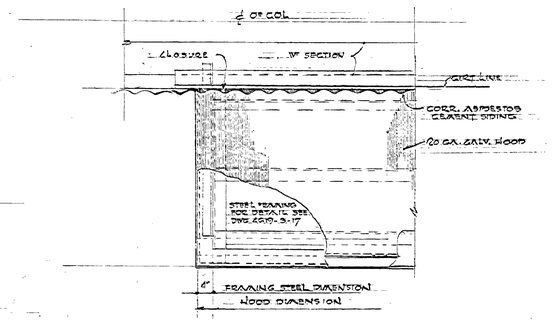

PART PLAN OF HOOD

DETAIL Q

SCALE 1½"=1'-0"

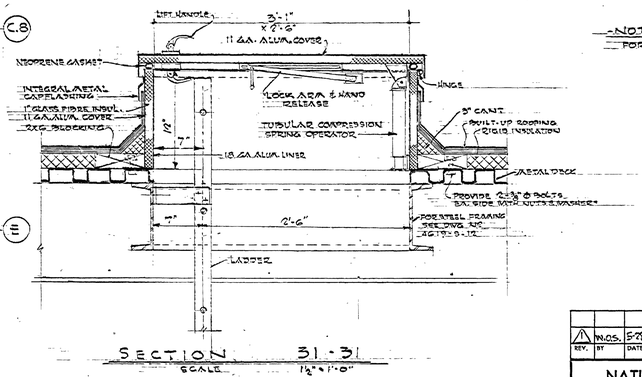

SECTION 31-31

SCALE 1½"=1'-0"

-NOTE-
FOR GENERAL NOTES SEE DWG 2619-A-1

AS BUILT

REV.	BY	DATE		C.I. NO.	APPROVED
1	W.O.S.	5-28-63	DIMS. REVISED	6660-1	G.H.

NATIONAL AERONAUTICS AND SPACE ADMINISTRATION — M S F C, HUNTSVILLE, ALABAMA

VITRO ENGINEERING COMPANY A DIVISION OF VITRO CORPORATION OF AMERICA NEW YORK

ADDITION TO BLDG - 4619 LOAD TEST ANNEX

ROOF AND H.V.A.C. ROOM PLANS

NASA AE CONT. NO. NASA 8-2143		FILE NO. MSFC 7385
SUBMITTED: H. E. Nielsen, CHIEF DES. ENGR. 10-10-62	APPROVAL RECOMMENDED: W. Sawyer, MGR. DATE: 10-22-62	APPROVED: Willis Lee, CHIEF, ENGINEERING BRANCH, NASA DATE: 10-25-62
AE DATE: SEP 11 1962		
DESIGNED: FE DRAWN: W. BABJAK CHECKED: J. N. SIMS SE	APPROVAL RECOMMENDED: CHIEF, DESIGN SECTION DESIGN DATE: SPEC. NO. FE-2-303	DRWG. NO. FE-C-4619-A-2
SCALE: 1/8" = 1'-0"		

APPROVED FOR SAFETY
Lillard Wayne OCT 20 1962
DATE

MSFC MASTER BID DISK 11-18-2013

OZALID PRINTS, INC., BROOKLYN 17, N.Y. STOCK NO. 649

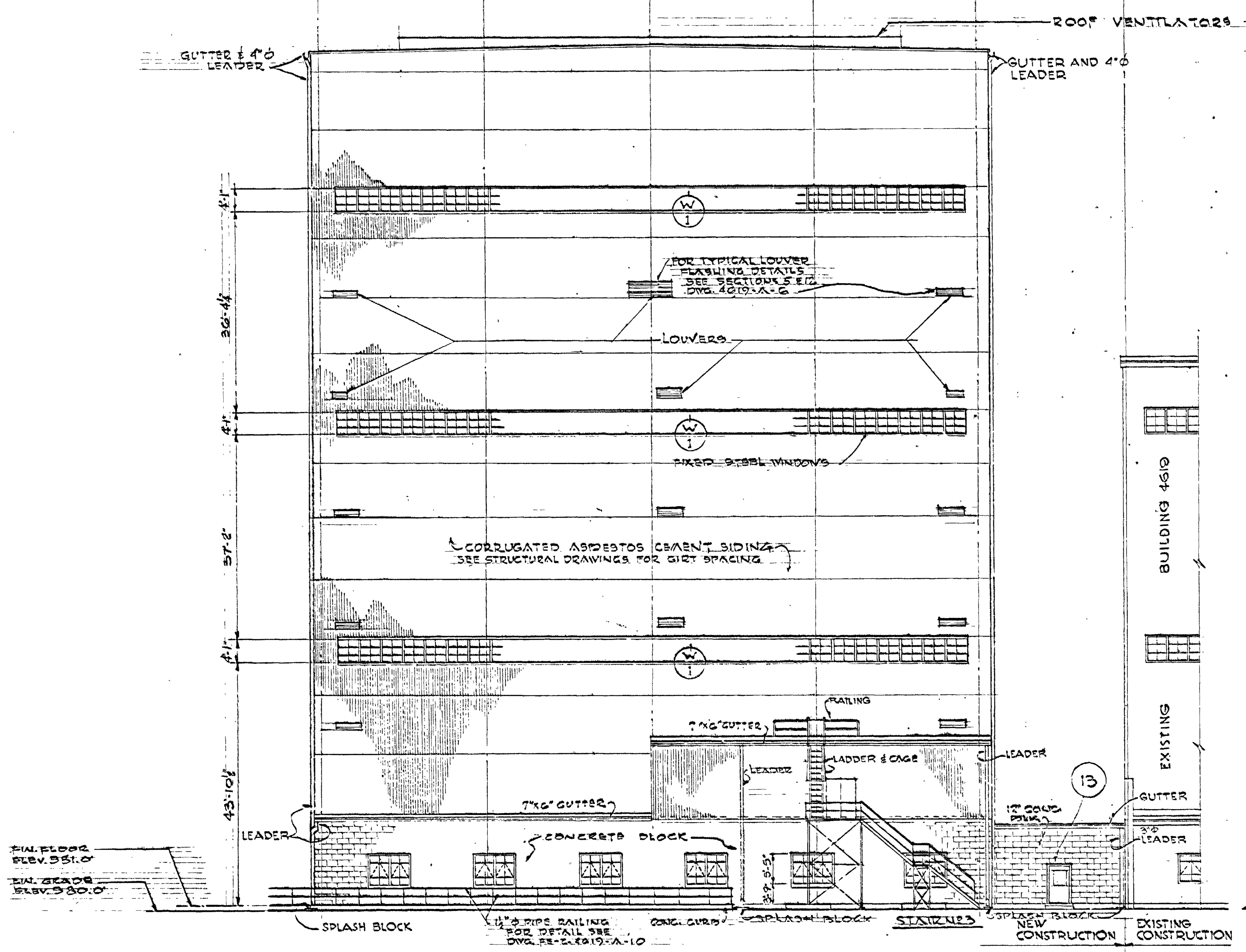

NORTH ELEVATION

SCALE: 1/16"=1'-0"

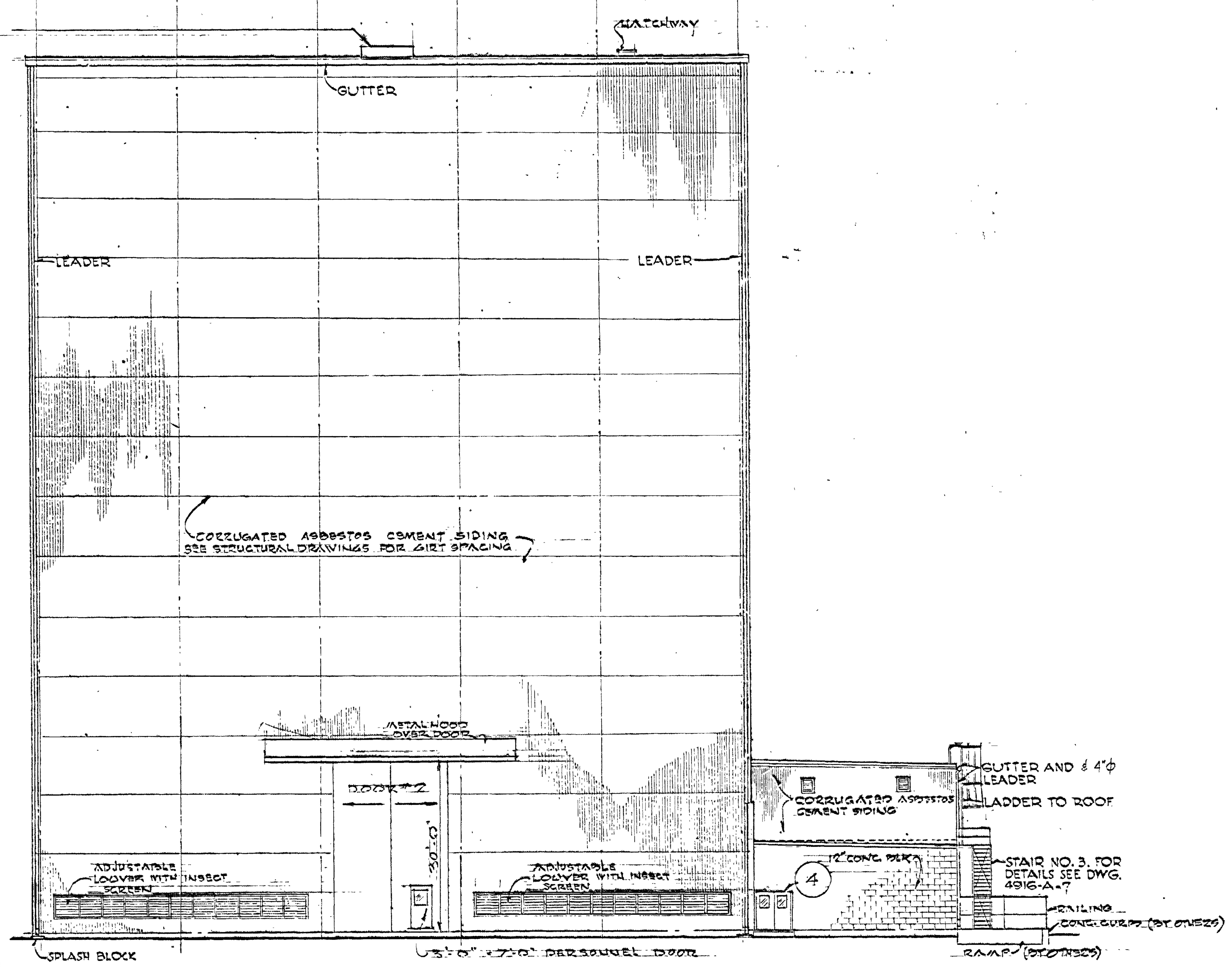

EAST ELEVATION

SCALE: 1/16"=1'-0"

NOTES:
1. HORIZONTAL LAPS OF CORR. ASBESTOS CEMENT SIDING TO BE IN LINE WITH LAPS ON THE EXIST. BLDG. 4619
2. FOR GENERALS NOTES SEE DWG. 4619-A-1

AS BUILT

REV.	BY	DATE		C.I. NO.	APPROVED

NATIONAL AERONAUTICS AND SPACE ADMINISTRATION — M S F C, HUNTSVILLE, ALABAMA

VITRO ENGINEERING COMPANY — A DIVISION OF VITRO CORPORATION OF AMERICA — NEW YORK

ADDITION TO BUILDING 4619 - LOAD TEST ANNEX

NORTH & EAST ELEVATIONS

NASA AE CONT. NO. NASA 8-2145

FILE NO. MSFC 7386

SUBMITTED: H. K. Meyer — CHIEF DES. ENGR. 9-10-62 — AE: DATE: SEPT. 14, 1962

APPROVAL RECOMMENDED: LAB. DATE: 10-22-62

APPROVED: CHIEF, ENGINEERING BRANCH — NASA DATE: 10-25-62

DESIGNED R.F.J.
DRAWN A. McN
CHECKED J. J. Sims Sr.

APPROVAL RECOMMENDED: CHIEF, SECTION

DESIGN DATE:

SCALE: 1/16" = 1'-0"

SPEC. NO. FE-D-303

DRWG. NO. FE-C-4619-A-3

APPROVED FOR SAFETY — OCT 20 1962 — MSFC SAFETY OFFICE — DATE

MSFC MASTER BID DISK 11-18-2013

MSFC-FORM 232 (REV. DEC. 1960)

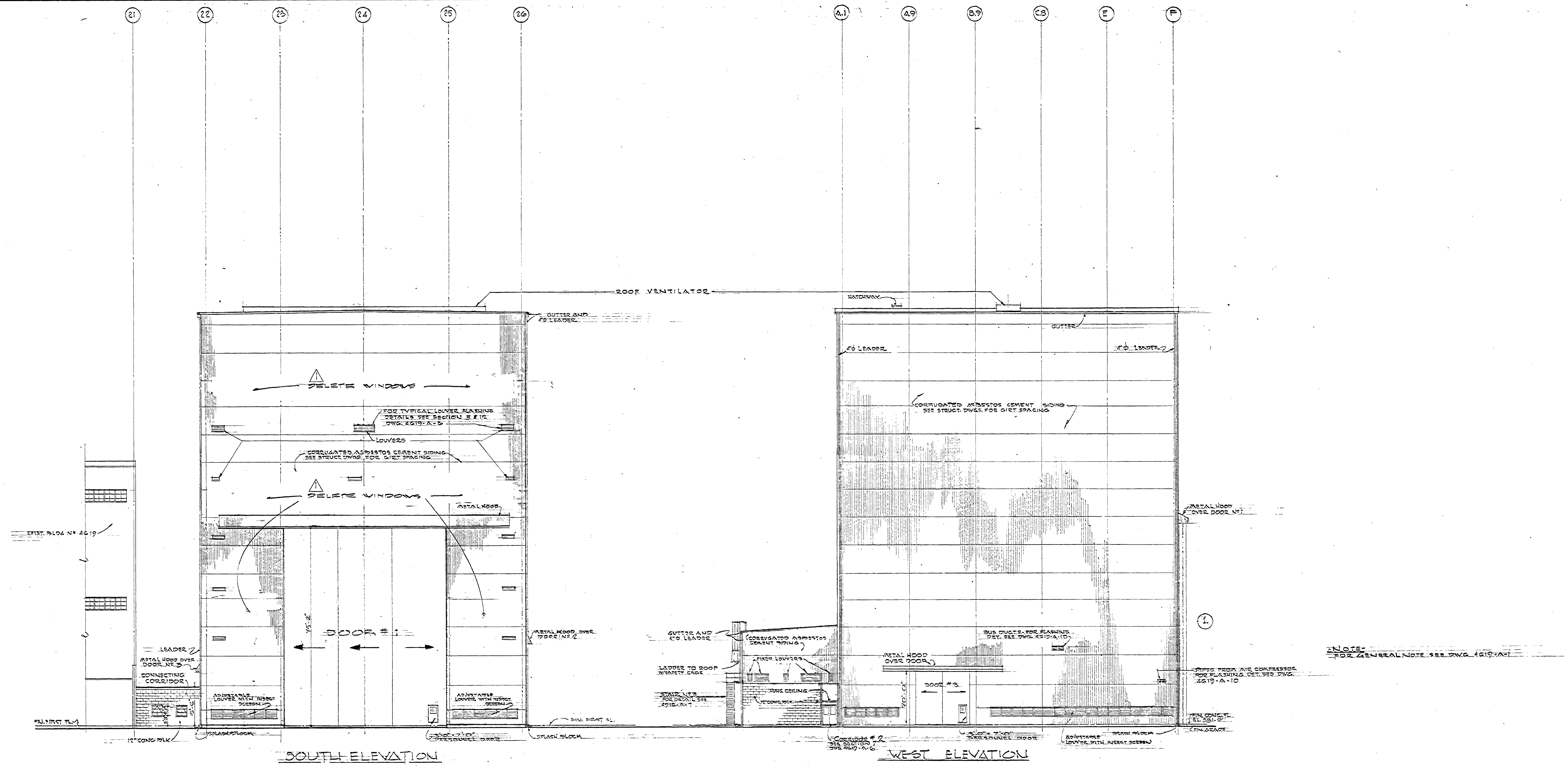

AS BUILT

REV.	BY	DATE		C.I. NO.	APPROVED
1		12-17-62	DELETE WINDOWS (AMEND #1)	-	

NATIONAL AERONAUTICS AND SPACE ADMINISTRATION
MSFC HUNTSVILLE, ALABAMA

VITRO ENGINEERING COMPANY A DIVISION OF VITRO CORPORATION OF AMERICA NEW YORK

ADDITION TO BUILDING 4619 - LOAD TEST ANNEX
SOUTH & WEST ELEVATIONS

NASA AE CONT. NO. NASA 8-2145
FILE NO. MSFC 7387

SUBMITTED: CHIEF DES. ENGR. 9-10-62
AE: DATE: SEPT. 14, 1962
APPROVAL RECOMMENDED:
LAB: DATE: 10-24-62
APPROVED: CHIEF, ENGINEERING BRANCH
NASA DATE: 10-25-62
DESIGNED
DRAWN
CHECKED
APPROVAL RECOMMENDED: CHIEF, SECTION
DESIGN DATE:
SCALE: 1/16" = 1'-0"
SPEC. NO. FE-D-303
DRWG. NO. FE-C-4619-A-4

APPROVED FOR SAFETY
OCT 30 1962
DATE

MSFC MASTER BID DISK 11-18-2013

MSFC-FORM 232 (REV. DEC. 1960)

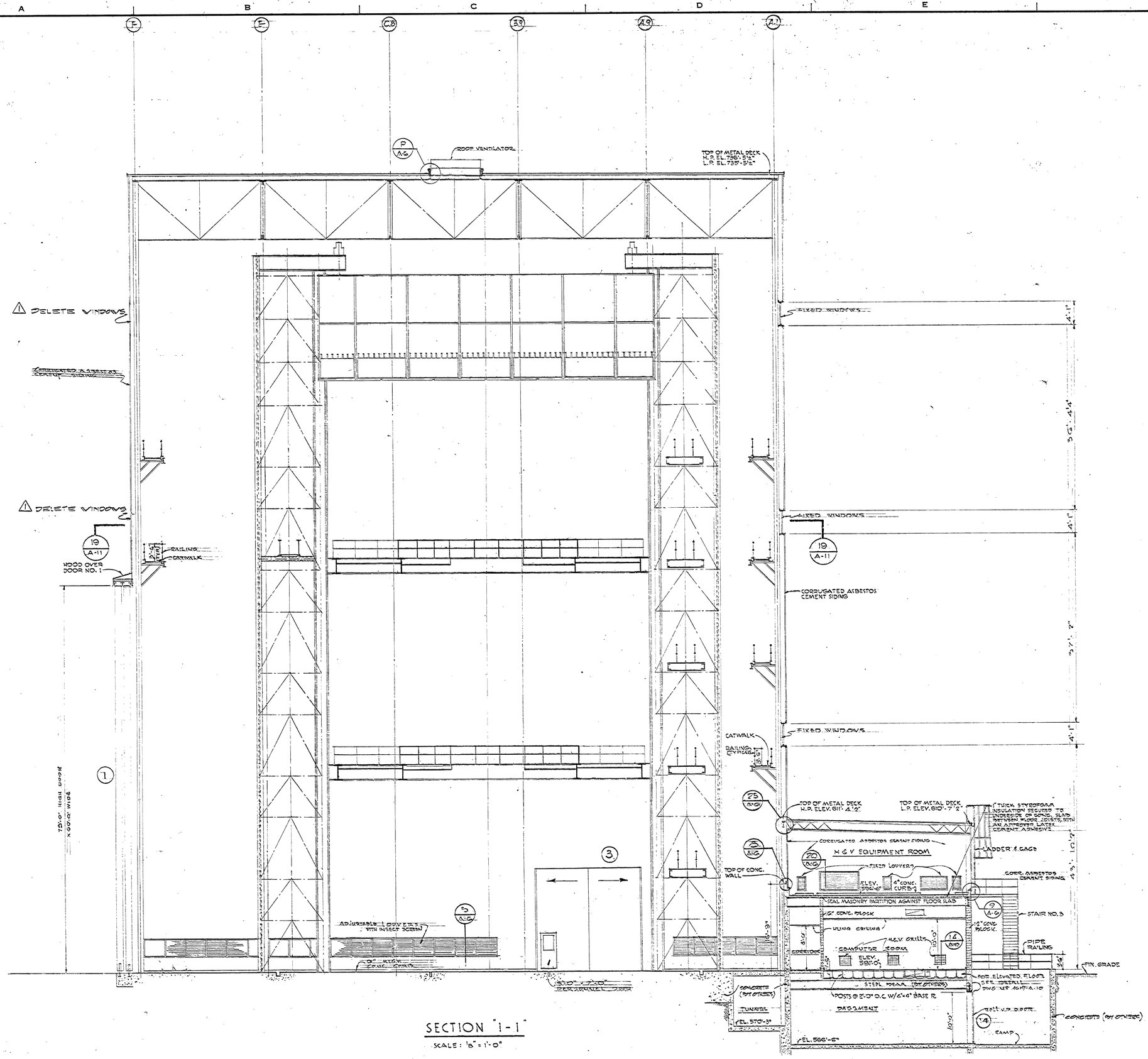

SECTION "1-1"

SCALE: 1/8" = 1'-0"

AS BUILT

REV.	BY	DATE		C.I. NO.	APPROVED
1	DF	12-17-62	DELETE WINDOWS (AMEND No. 1)	—	

NATIONAL AERONAUTICS AND SPACE ADMINISTRATION — M S F C, HUNTSVILLE, ALABAMA

VITRO ENGINEERING COMPANY A DIVISION OF VITRO CORPORATION OF AMERICA — NEW YORK

ADDITION TO BLDG. 4619, LOAD TEST ANNEX

SECTION 1-1

NASA AE CONT. NO. NASA 8-2145 — FILE NO. MSFC 7388

SUBMITTED: Y. L. Wing, CHIEF, DES. ENGR. BRANCH — APPROVAL RECOMMENDED: [illegible] — APPROVED: [illegible], CHIEF, ENGINEERING BRANCH

A/E DATE: SEPT. 14, 1962 — LAB. DATE: 10-22-62 — NASA DATE: 10-25-62

DESIGNED R.T.V. — DRAWN A.P.N. — CHECKED W. Sims, Sr. — APPROVAL RECOMMENDED: [illegible], CHIEF, DESIGN SECTION — DESIGN DATE:

SCALE: 1/8" = 1'-0" — SPEC. NO. FE-D-303 — DRWG. NO. FE-C-4619-A-5

Approved For Safety — [illegible], Safety Officer — OCT 20 1992 — DATE

MSFC MASTER BID DISK 11-18-2013

OSSIUM PRESS, INC., BROOKLYN N.Y. STOCK NO. 649

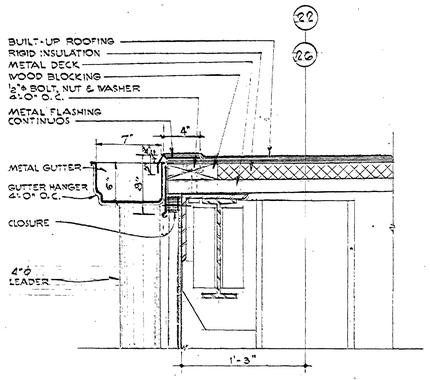

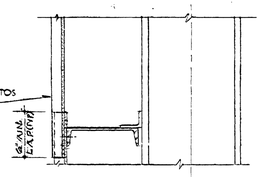

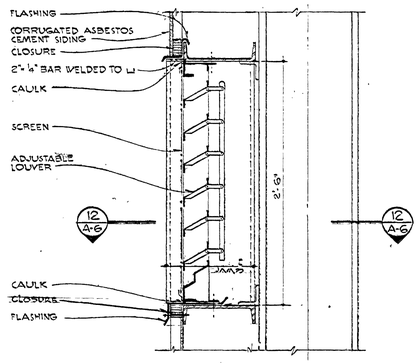

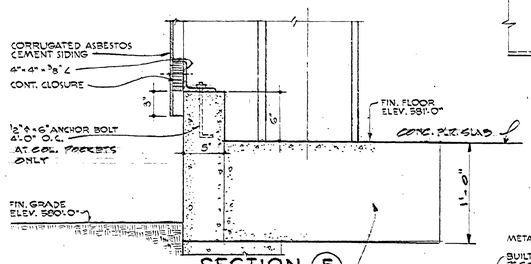

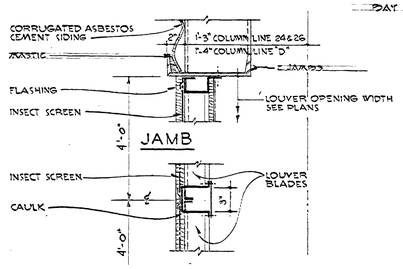

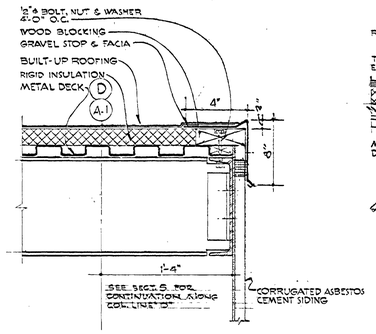

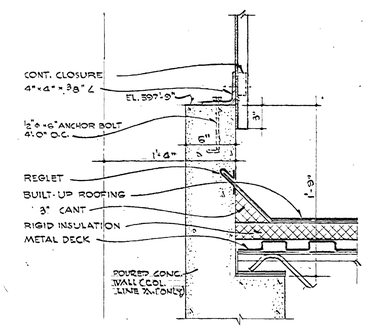

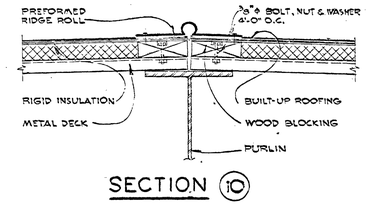

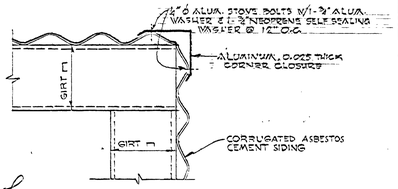

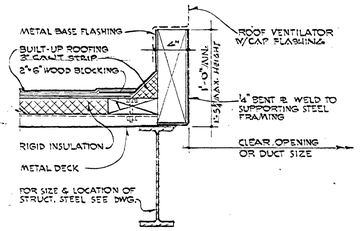

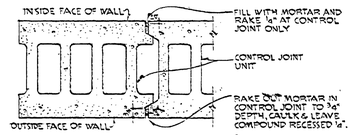

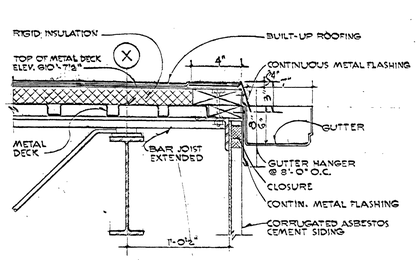

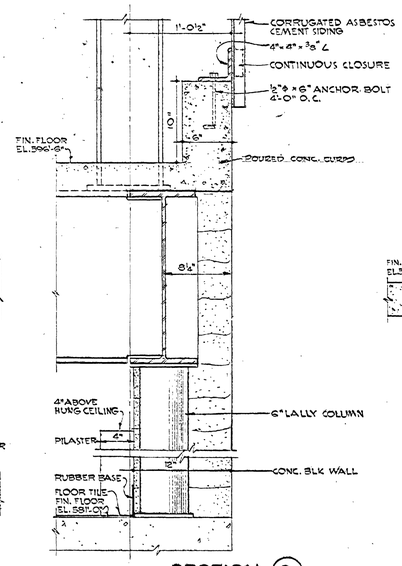

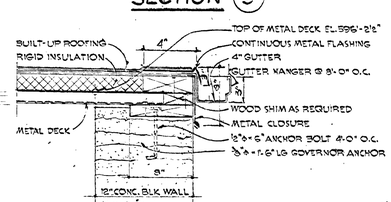

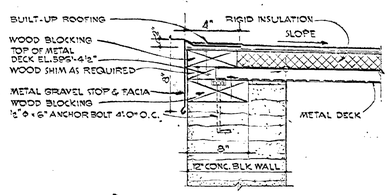

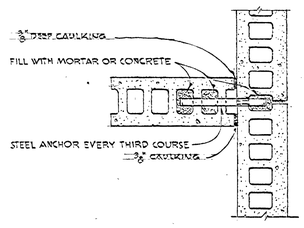

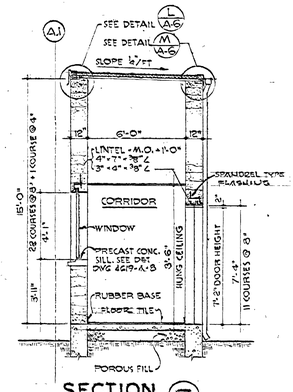

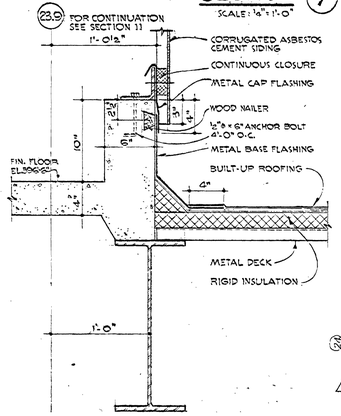

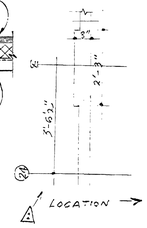

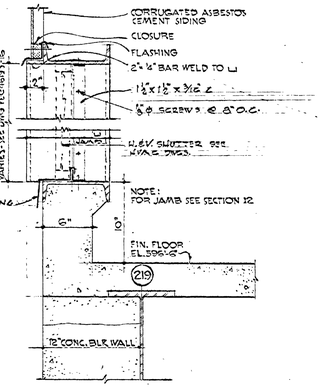

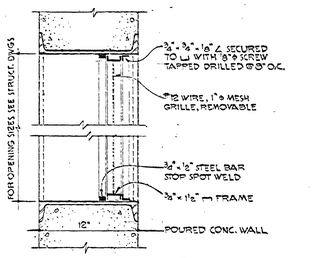

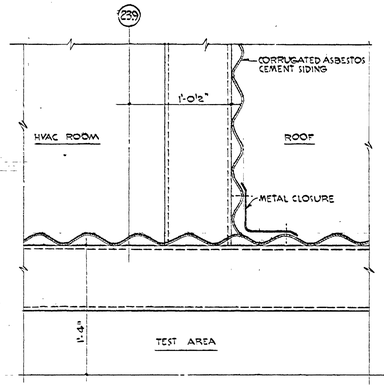

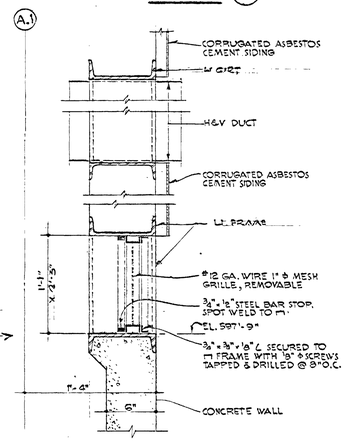

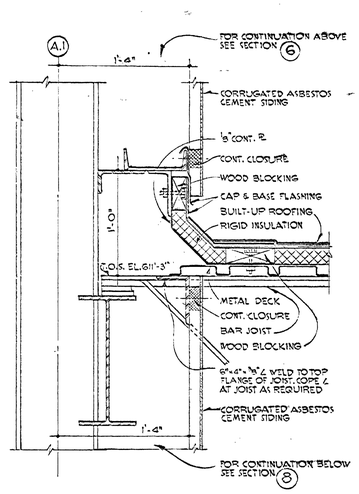

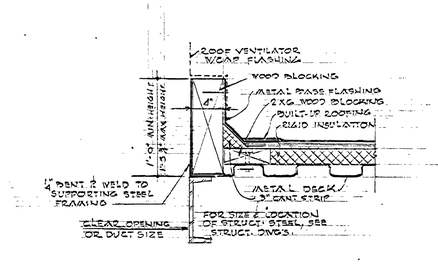

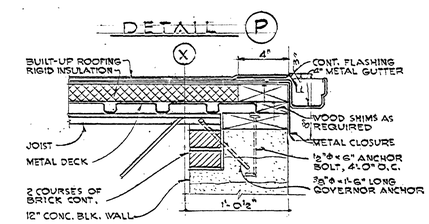

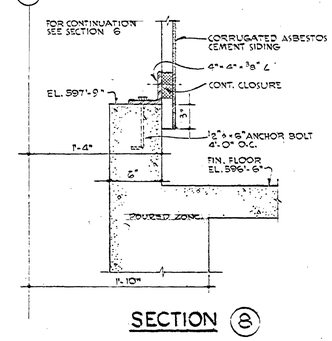

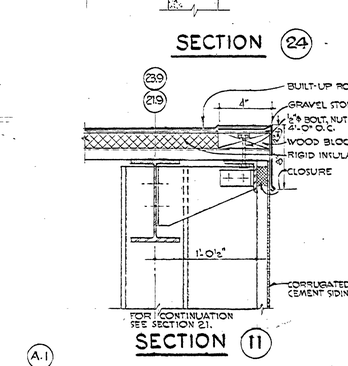

AS BUILT

REV.	BY	DATE		C.I. NO.	APPROVED
A	SG	5-29-63	AS-BUILT		

NATIONAL AERONAUTICS AND SPACE ADMINISTRATION — M S F C, HUNTSVILLE, ALABAMA

VITRO ENGINEERING COMPANY A DIVISION OF VITRO CORPORATION OF AMERICA NEW YORK

ADDITION TO BLDG 4619-LOAD TEST ANNEX
WALL SECTIONS AND DETAILS

NASA AE CONT. NO. NASA 8-2145 — FILE NO. MSFC 7389

SUBMITTED: CHIEF, DSIC, BLDGS. DATE: 10-10-62	APPROVAL RECOMMENDED: DATE: 10-22-62	APPROVED: CHIEF, ENGINEERING BRANCH NASA DATE: 10-25-62
AE DATE: SEPT 14, 1962	ZAR	
DESIGNED: R F J DRAWN: W. BABJAK CHECKED: W. Sides SR.	APPROVAL RECOMMENDED: CONTRACTING SECTION DESIGN DATE:	DRWG. NO. FE-C-4619-A-6
SCALE: 1½"=1'-0" & AS NOTED	SPEC. NO.: FE-D-303	

APPROVED FOR SAFETY — Edward Monroe — OCT 20 1962 — DATE — CHIEF, SAFETY OFFICE

MSFC MASTER BID DISK 11-18-2013

GRAVURE PRESS, INC., BROOKLYN 17, N. Y. STOCK NO. 649

MSFC-FORM 232 (REV. DEC., 1960)

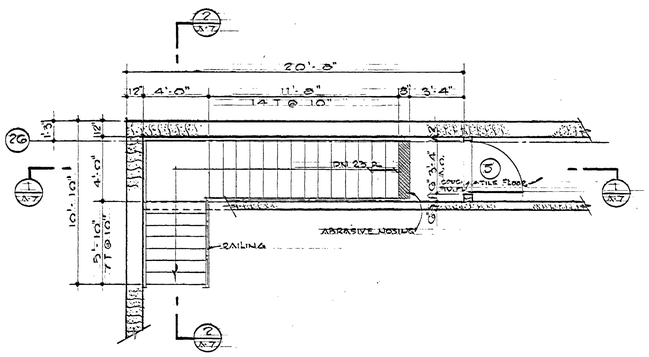

PLAN STAIR Nº 1
SCALE: 1/4"=1'-0"

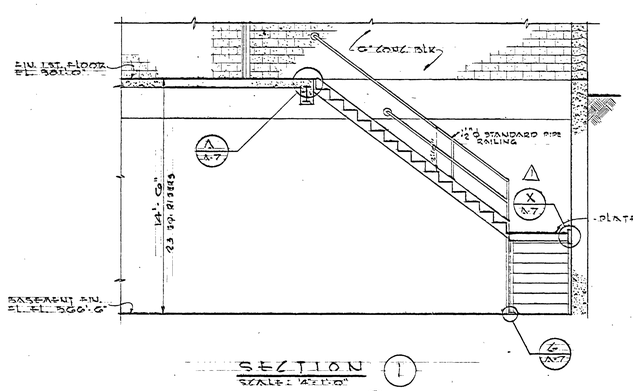

SECTION (1)
SCALE: 1/4"=1'-0"

SECTION (2)
SCALE: 1/4"=1'-0"

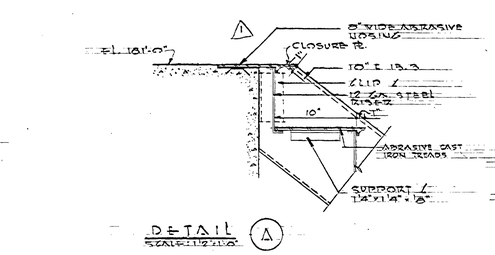

DETAIL (A)
SCALE: 1½"=1'-0"

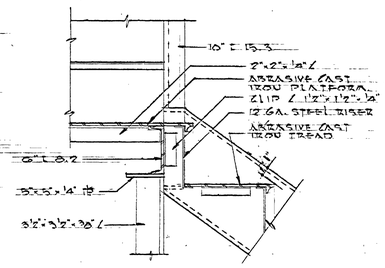

DETAIL (C)
SCALE: 1½"=1'-0"

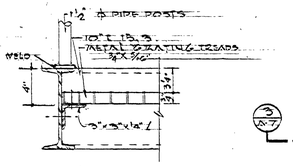

DETAIL (E)
SCALE: 1½"=1'-0"

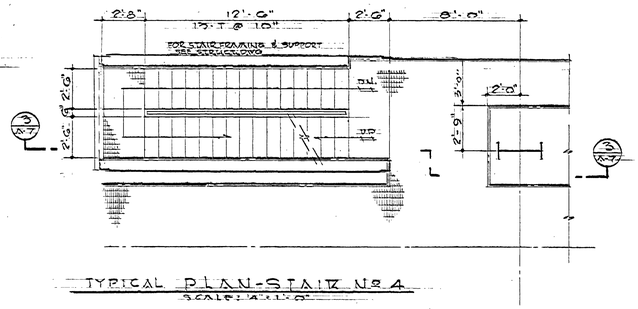

TYPICAL PLAN-STAIR Nº 4
SCALE: 1/4"=1'-0"

DETAIL (B) AS SHOWN
DETAIL (X) OPP. HAND
SCALE: 1½"=1'-0"

DETAIL (6)
SCALE: 1½"=1'-0"
(PLAN VIEW)

DETAIL (D)

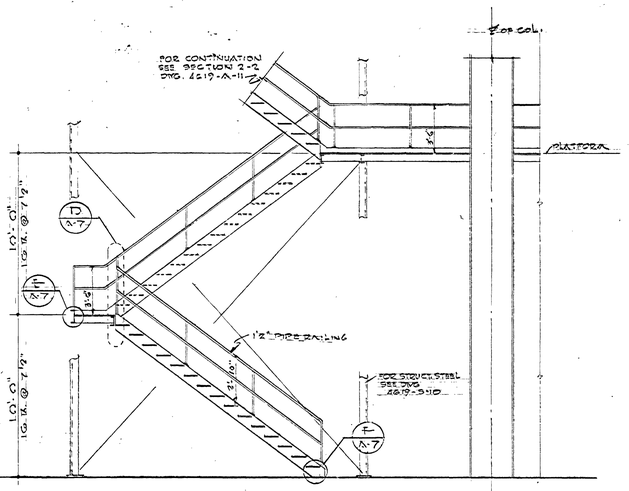

SECTION (3)
SCALE: 1/4"=1'-0"

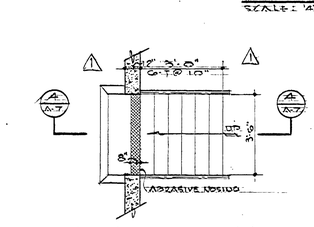

PLAN STAIR Nº 2
SCALE: 1/4"=1'-0"

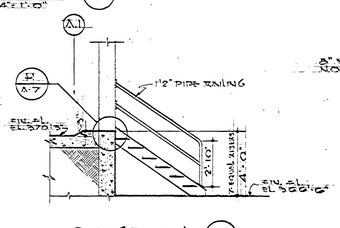

SECTION (4)
SCALE: 1/4"=1'-0"

DETAIL (H)
SCALE: 1½"=1'-0"

SECTION (7)
SCALE: 3/4"=1'-0"

LADDER RUNG DETAIL

DETAIL (K)
SCALE: 1½"=1'-0"

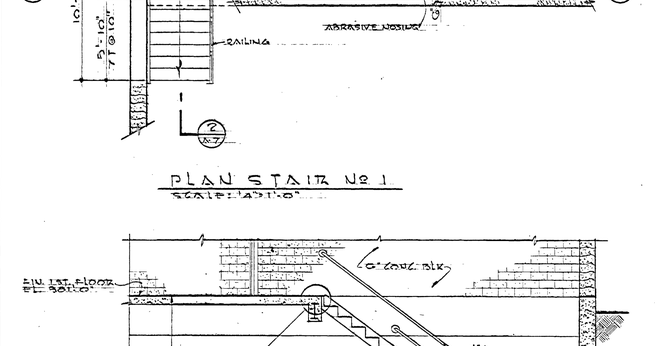

PLAN STAIR Nº 3
SCALE: 1/4"=1'-0"

DETAIL (J)
SCALE: 1½"=1'-0"

DETAIL (F)
SCALE: 1½"=1'-0"

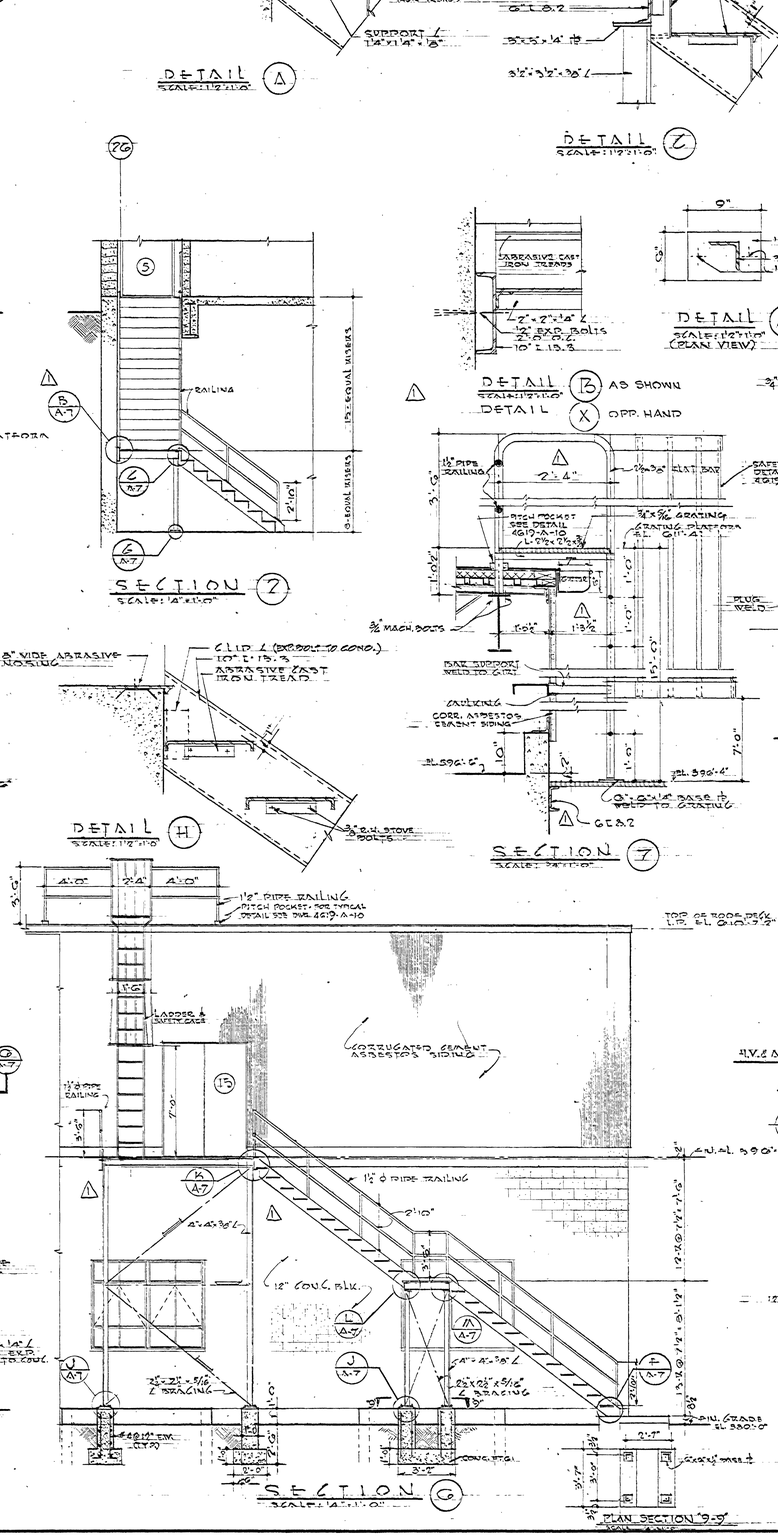

SECTION (G)
SCALE: 1/4"=1'-0"

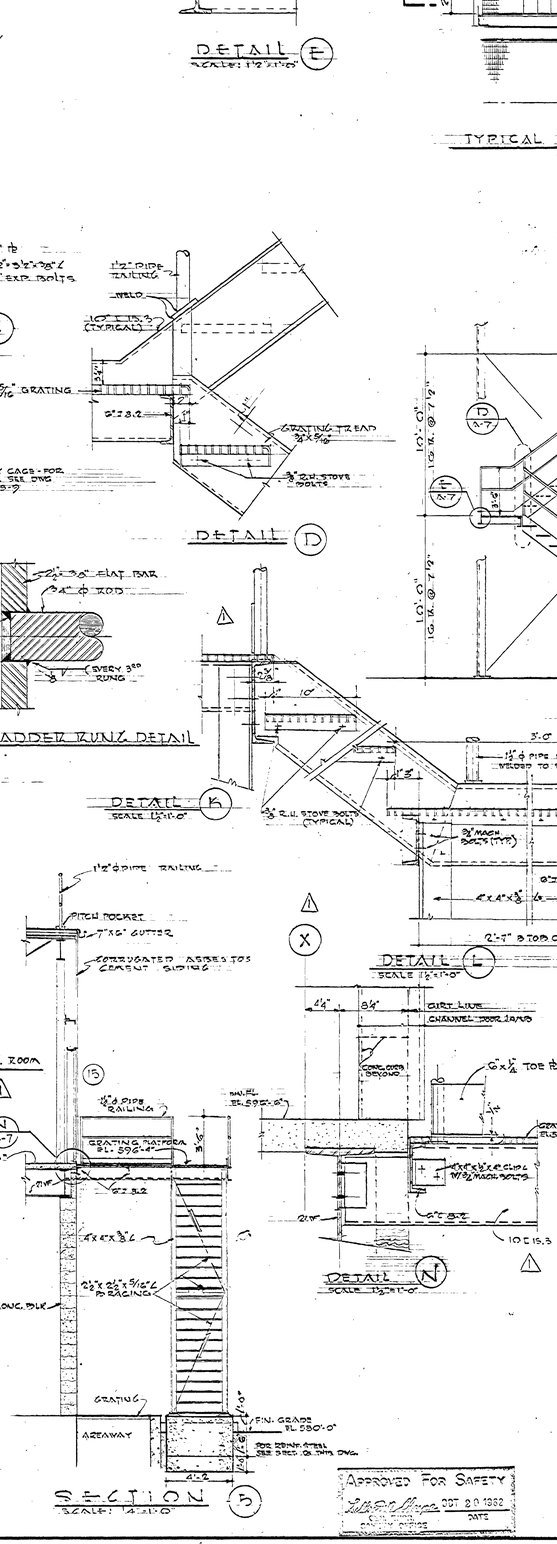

SECTION (5)
SCALE: 1/4"=1'-0"

DETAIL (N)
SCALE: 1½"=1'-0"

DETAIL (L)
SCALE: 1½"=1'-0"

DETAIL (M)
SCALE: 1½"=1'-0"

NOTE-
FOR GENERAL NOTES, SEE DWG. 4619-A-1

AS BUILT

REV.	BY	DATE		C.I. NO.	APPROVED
1	WDS	1-29-63	DELETED DIM. AXIS, ADD. DET. N, CONT. DRAWING & LAYING OF STAIR NO 3, DWGS CHANGED IN SECT. J	BTC CT-5560-1	

NATIONAL AERONAUTICS AND SPACE ADMINISTRATION — MSFC HUNTSVILLE, ALABAMA

VITRO ENGINEERING COMPANY A DIVISION OF VITRO CORPORATION OF AMERICA NEW YORK

ADDITION TO BLDG. 4619 - LOAD TEST ANNEX

STAIR DETAILS

STAIR NO'S. 1, 2, 3, & 4

NASA AE CONT. NO. NASA 8-2145		FILE NO. MSFC 7390
SUBMITTED: H.K. Meyer CHIEF DES. SECT. 10-10-62	APPROVAL RECOMMENDED: J.J. Sommer CHIEF, ENGINEERING RESEARCH	APPROVED: NASA DATE: 10-25-62
AE: DATE: SEPT 14, 1962	LAR DATE: 10-22-62	
DESIGNED R.P.J. DRAWN H. TS. SIMMONS CHECKED J.K. Lewis Sr.	APPROVAL RECOMMENDED: CHIEF, DESIGN SECTION DESIGN DATE:	DRWG. NO. FE-C-4619-A-7
SCALE: AS NOTED	SPEC. NO.: FE-0-303	

APPROVED FOR SAFETY — OCT 20 1962 — DATE

MSFC MASTER BID DISK 11-18-2013

GRUVE PRESS, INC., BROOKLYN 12, N.Y. STOCK NO. 440

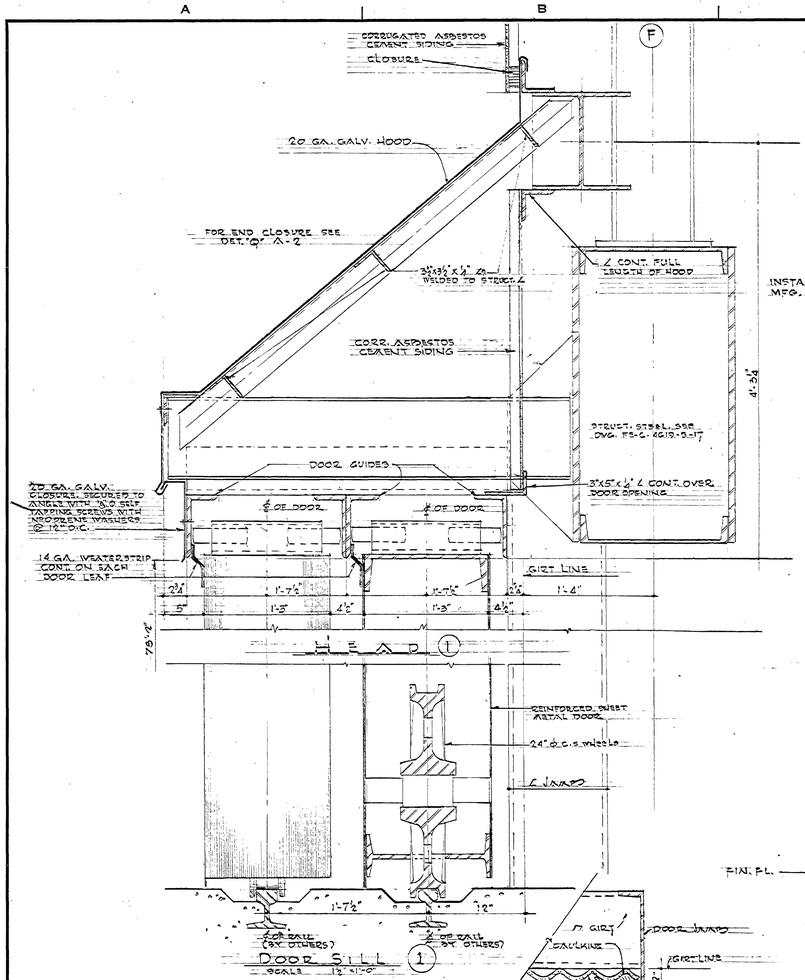

AS BUILT

REV.	BY	DATE		C.I. NO.	APPROVED
1	DP	9-16-63	REVISED DETAIL 20 SHOW AS BUILT & ADDED STEEL SC	5560-10	

NATIONAL AERONAUTICS AND SPACE ADMINISTRATION — M S F C, HUNTSVILLE, ALABAMA

VITRO ENGINEERING COMPANY A DIVISION OF VITRO CORPORATION OF AMERICA — NEW YORK

ADDITION TO BLDG. 4619 - LOAD TEST ANNEX

DOOR & WINDOW DETAILS

NASA AE CONT. NO. S-2145		FILE NO. M S F C	7391
SUBMITTED: H. K. Ware 5-13-62	APPROVAL RECOMMENDED:	APPROVED:	
CHIEF, STS, ENGR. Hill 5-14	J. J. Lowrey	CHIEF, ENGINEERING BRANCH	
AE: DATE: MAY-10-1962	LAB: DATE: 10-22-62	NASA: DATE: Jan 25 62	
DESIGNED: R.T.J.	APPROVAL RECOMMENDED:	DRWG. NO.	
DRAWN: W.H.	CHIEF, Common Section	FE-C-4619-A-8	
CHECKED: J.J.L.	DESIGN DATE:		
SCALE: AS NOTED	SPEC. NO. FE-C-1-303		

APPROVED FOR SAFETY — Wilson Ware — OCT 30 1962 — DATE

MSFC MASTER BID DISK 11-18-2013

DOUGLAS PRESS, INC., BROOKLYN 31, N.Y. STOCK NO. 449

Job 1412

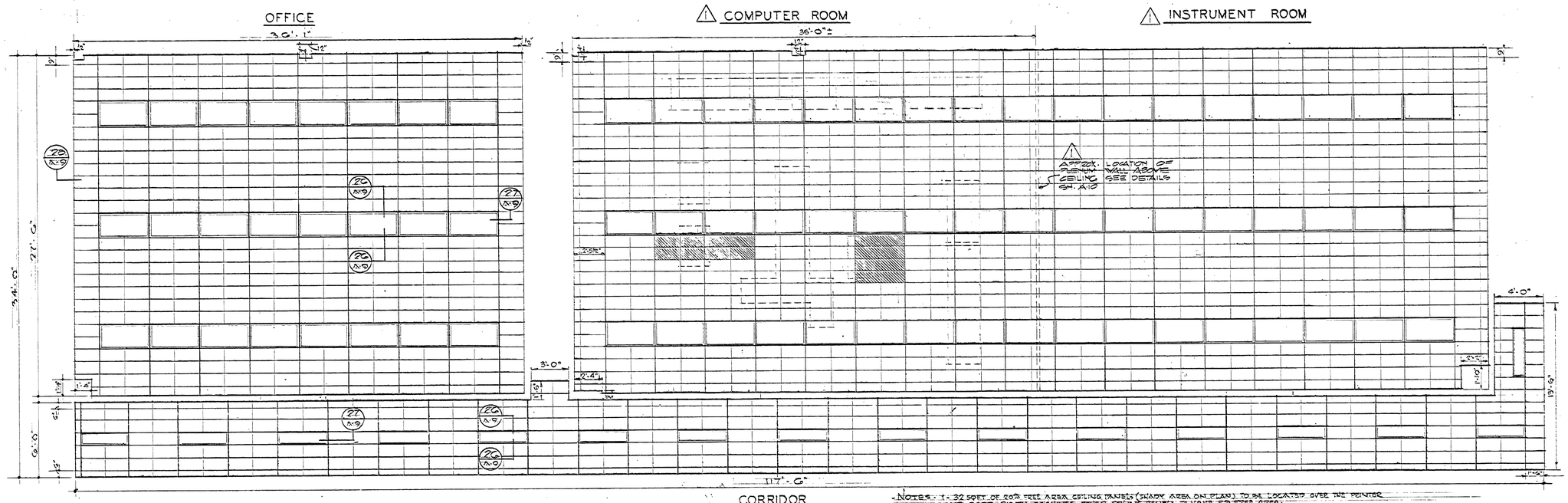

NOTES: 1: 32 SQFT OF 20% FREE AREA CEILING PANELS (SHADY AREA ON PLAN) TO BE LOCATED OVER THE PRINTER AND CARD PUNCH MACHINES. OTHER CEILING PANELS TO HAVE 5% FREE AREA.
2: PROVIDE ACOUSTICAL PADS FOR 85% OF ENTIRE CEILING AREA

REFLECTED CEILING PLAN

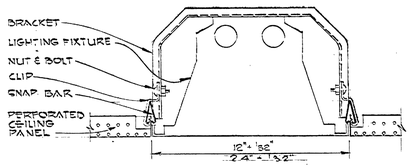

SECTION 26
SCALE: 3" = 1'-0"

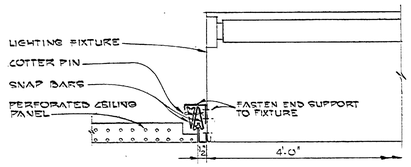

SECTION 27
SCALE: 3" = 1'-0"

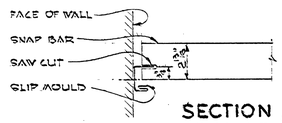

SECTION 28
SCALE: 3" = 1'-0"

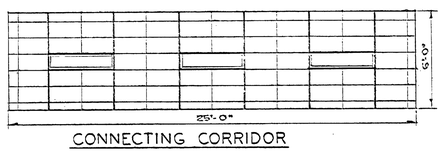

CONNECTING CORRIDOR

REFLECTED CEILING PLAN

DOOR SCHEDULE

NO.	TYPE	SIZE WIDTH	SIZE HEIGHT	SIZE T	MATERIAL	OPERATION	FRAME H	FRAME J	FRAME S	MATERIAL	HARDWARE	LOUVERS	REMARKS
1.	H	60'-0"	75'-0"	1 3/4"	STEEL	MOTOR OPERATED HORIZONTAL SLIDING	1	1	1	L	H.W-6		
2.	G	30'-0"	30'-0"	8"	STEEL	MOTOR OPERATED HORIZONTAL SLIDING	2	2	2	L	H.W-6		
3.	G	20'-0"	20'-0"	8"	STEEL	MOTOR OPERATED HORIZONTAL SLIDING	2	2	2	L	H.W-6		
4.	A	2'-3"-0"	7'-2"	1 3/4"	H.M.	R.H.-ACT.	5	5,SA	5	P.S.	H.W-1		ASTRAGAL DET. DWG. A-10
5.	J	3'-0"	7'-2"	1 3/4"	H.M.	L.H.R.	3	3	-	P.S.	H.W-3		
6.	B	2'-2'-6"	7'-2"	1 3/4"	H.M.	BOTH ACT.	3	3	-	P.S.	H.W-2	17"x22"	INVERTED V. BLADES 85% FREE AREA
7.	C	2'-3'-0"	7'-2"	1 3/4"	H.M.	R.H.-ACT.	4	4	-	P.S.	H.W-1		ASTRAGAL DET. DWG. A-10
9.	K	2'-2'-6"	7'-2"	1 3/4"	H.M.	BOTH ACT.	3	3	-	P.S.	H.W-2		
10.	B	2'-2'-6"	7'-2"	1 3/4"	H.M.	BOTH ACT.	3	3	-	P.S.	H.W-2	17"x22"	INVERTED V. BLADES 85% FREE AREA
11.	C	2'-3'-0"	7'-2"	1 3/4"	H.M.	R.H.-ACT.	4	4	-	P.S.	H.W-1		ASTRAGAL DET. DWG. A-10
12.	A	2'-2'-6"	7'-2"	1 3/4"	H.M.	R.H.-ACT.	5	5,SA	-	P.S.	H.W-1		
13.	D	3'-8"	7'-2"	1 3/4"	H.M.	L.H.	5	5	5	P.S.	H.W-5		
14.	F	16'-0"	10'-0"		STEEL	MOTOR OPERATED ROLLUP DOOR	G	G	G	L	H.W-6		
15.	F	2'-2'-6"	7'-0"	1 3/4"	H.M.	R.H.-ACT	7	7	7	L	H.W-7		ASTRAGAL DET. DWG. A-10

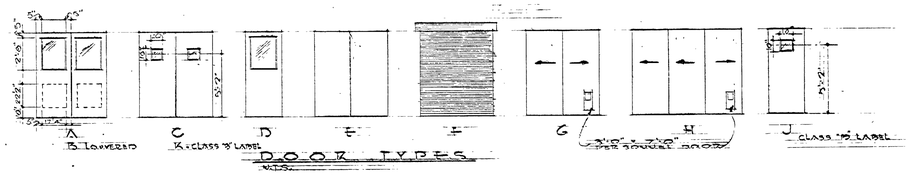

DOOR TYPES

FINISH SCHEDULE

ROOM DESIGNATION	MATERIAL FLOOR	MATERIAL BASE	MATERIAL WALLS	MATERIAL CEILING	PAINTING (FEDERAL STANDARD NO.) FLOOR	TRIM	WALLS	CEILING	REMARKS
TEST AREA	CONCRETE	CONCRETE	ASBESTOS SIDING & CONCRETE	METAL ROOF DECK & EXPOSED STEEL	LIQUID HARDENER	20324	33711	36622	PAINT UNDERSIDE OF METAL ROOF DECK
CORRIDOR NO. 1	VINYL ASBESTOS TILE	4" RUBBER BASE	CONCRETE & CONCRETE BLOCK	METAL PAN HUNG CEILING 8'-0" HIGH	—	20324	33711	—	
CORRIDOR NO. 2	VINYL ASBESTOS TILE	4" RUBBER BASE	CONCRETE BLOCK	METAL PAN HUNG CEILING 8'-0" HIGH	—	20324	33711	—	
OFFICE	VINYL ASBESTOS TILE	4" RUBBER BASE	CONCRETE BLOCK	METAL PAN HUNG CEILING 10'-0" HIGH	—	20324	33711	—	
COMPUTER ROOM	VINYL TILE	4" RUBBER BASE	CONCRETE BLOCK	METAL PAN HUNG CEILING 10'-0" HIGH	LIQUID HARDENER ON CONCRETE UNDER ELEVATED FL.	20324	33711	—	ELEVATED FLOOR - SEE DET. DWG. #GM-A-10
INSTRUMENT ROOM	VINYL ASBESTOS TILE	4" RUBBER BASE	CONCRETE BLOCK	METAL PAN HUNG CEILING 10'-0" HIGH	—	20324	33711	—	
H&V EQUIP ROOM	CONCRETE	CONCRETE	ASBESTOS SIDING	METAL ROOF DECK & EXPOSED STEEL	LIQUID HARDENER	20324	—	36622	PAINT UNDERSIDE OF METAL ROOF DECK
BASEMENT	CONCRETE	—	CONCRETE	CONCRETE	LIQUID HARDENER	24226	34711	37875	
INSTRUMENT TUNNEL	CONCRETE	—	CONCRETE	CONCRETE	LIQUID HARDENER	—	—	—	

NOTES:
1. COLORS ARE FROM A.S.F.C. COLOR STANDARD
2. COLOR OF VINYL & VINYL ASBESTOS TILES TO BE SELECTED BY THE CONTRACTING OFFICER.

APPROVED FOR SAFETY
Safety Office
OCT 20 1962
DATE

AS BUILT

REV.	BY	DATE		C.I. NO.	APPROVED
2	DG	2-14-63	As Built		
1	DR	5-1-63	Revised ceiling in computer rm. & instrument rm.	5560-3	

NATIONAL AERONAUTICS AND SPACE ADMINISTRATION — M S F C — HUNTSVILLE, ALABAMA

VITRO ENGINEERING COMPANY A DIVISION OF VITRO CORPORATION OF AMERICA NEW YORK

ADDITION TO BLDG 4619 - LOAD TEST ANNEX

DOOR & FINISH SCHEDULES & REFLECTED CEILING PLAN

NASA AE CONT. NO. NASA B-2145 — FILE NO. MSFC 7392

SUBMITTED: H.R. Tillman	APPROVAL RECOMMENDED:	APPROVED:	
CHIEF, DES. SUBR. DATE: 9/17/10-62	CHIEF, DESIGN SECTION	CHIEF, ENGINEERING BRANCH	
AE DATE: SEPT 10, 1962	ENG. DATE: 10-22-62	NASA DATE: 10-25-62	
DESIGNED R.F.J.	APPROVAL RECOMMENDED:	DRWG. NO.	
DRAWN W. BABJAK, N.D.S.	CHIEF, DESIGN SECTION	FE-C-4619-A-9	
CHECKED H.H. Sims SR.	DESIGN DATE:		
SCALES 1/8" = 1'-0" & AS NOTED	SPEC. NO. FE-C-303		

MSFC MASTER BID DISK 11-18-2013

GILLUM PRESS, INC., BROOKLYN 17, N.Y. STOCK NO. 440

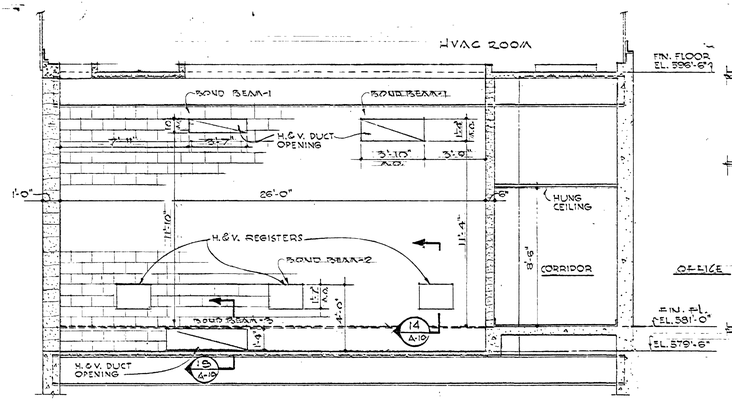

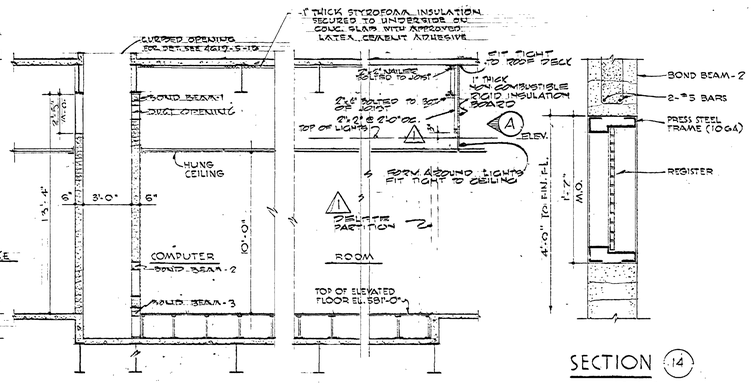

SECTION (14)
SCALE: 1½"=1'-0"

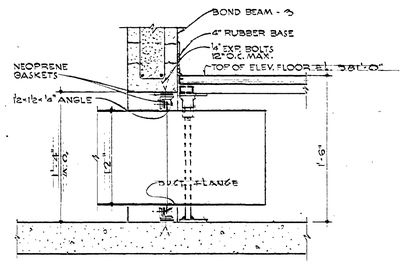

SECTION (15)
SCALE: 1½"=1'-0"

BOND BEAM SCHEDULE

NO.	HEIGHT	LENGTH	REINF.
1.	7'-8"	31'-0"	2-#5
2.	7'-8"	2'-8"	2-#5
3.	7'-8"	0'-0"	2-#5
4.	7'-8"	8'-0"	2-#5
5.	7'-8"	4'-0"	2-#5

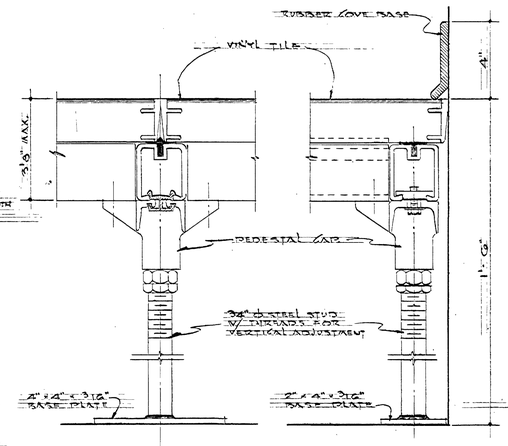

ELEVATED FLOOR DETAIL
SCALE: HALF FULL SIZE

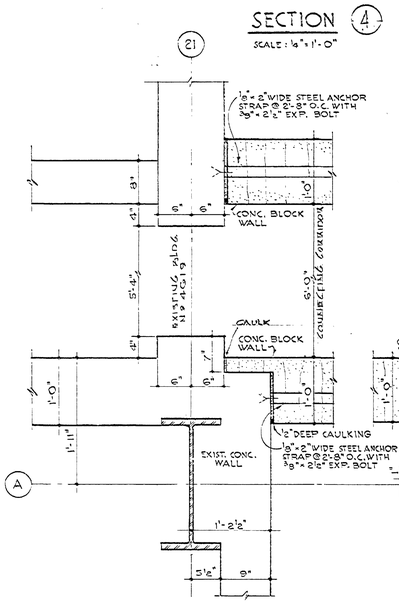

DETAIL (D)
SCALE: 1"=1'-0"

DETAIL (E)
SCALE: 1"=1'-0"

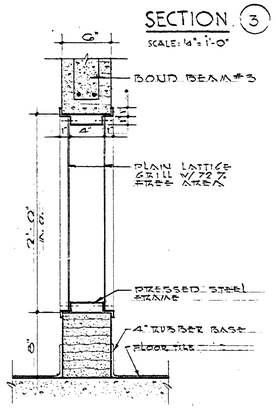

SECTION (3)
SCALE: ½"=1'-0"

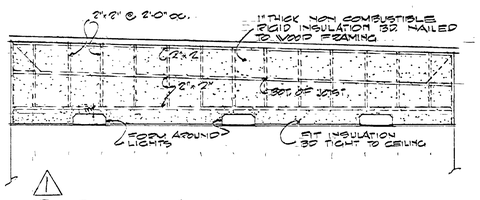

PLENUM WALL ELEV. (A)
SCALE ½"=1'-0"

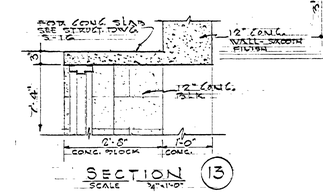

SECTION (13)
SCALE ¾"=1'-0"

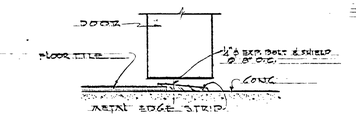

JUNCTION OF CONC. & FL. TILE
HALF FULL SIZE

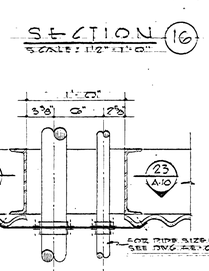

PLAN

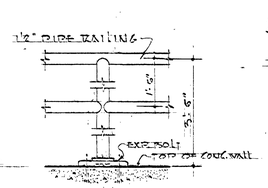

RAILING DETAIL
SCALE: 1½"=1'-0"

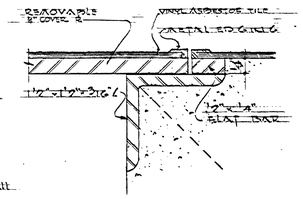

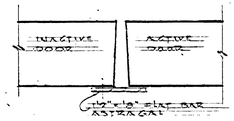

MEETING STILE DET.
SCALE: HALF FULL SIZE

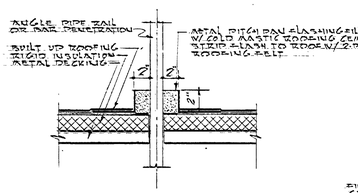

TYPICAL PITCH POCKET DET.
SCALE: 1½"=1'-0"

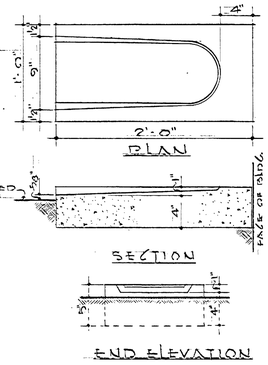

PRE-CAST CONCRETE SPLASH BLOCK
SCALE: 1½"=1'-0"

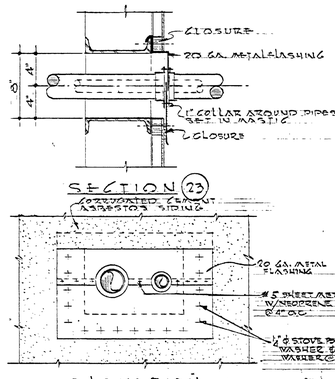

PIPE PENETRATION DET. THRU SIDING
SCALE: 1½"=1'-0"

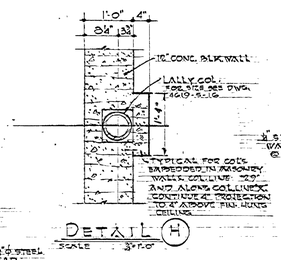

DETAIL (H)
SCALE 3"=1'-0"

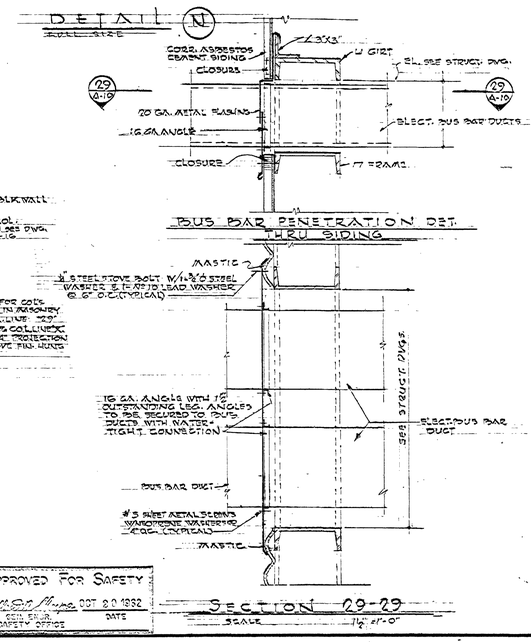

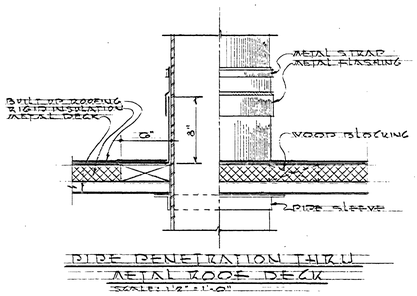

PIPE PENETRATION THRU METAL ROOF DECK
SCALE: 1½"=1'-0"

NOTE!
1.- FOR GENERAL NOTES, SEE DWG. 4619-A-1

⚠1 REVISION NOTE
MODIFIED SECTION (3) & ADDED ELEV. A SHOWING PLENUM WALL. DIMENSIONS TO BE VERIFIED AT JOB SITE.

AS BUILT

REV.	BY	DATE		C.I. NO.	APPROVED
⚠1	DF	9-1-63	SEE REVISION NOTE	55560-3	GDK

NATIONAL AERONAUTICS AND SPACE ADMINISTRATION — MSFC, HUNTSVILLE, ALABAMA

VITRO ENGINEERING COMPANY A DIVISION OF VITRO CORPORATION OF AMERICA NEW YORK

ADDITION TO BLDG. 4619 - LOAD TEST ANNEX

MISCELLANEOUS DETAILS

NASA AE CONT. NO. NASA 8-2145 — FILE NO. MSFC 7393

SUBMITTED: H.K. Mann — CHIEF, DES. ENGR. DATE 9/12/62	APPROVAL RECOMMENDED:	APPROVED: — CHIEF, ENGINEERING BRANCH
AS DATE: SEPT. 14, 1962	LAB: DATE 9/22/62	NASA DATE: 10-25-62
DESIGNED: R.F.J. DRAWN: W. BABIAK & H.D. DEATER CHECKED: J. Sims Sr.	APPROVAL RECOMMENDED: CHIEF, DESIGN SECTION	DRWG. NO.
SCALE: AS NOTED	DESIGN DATE: SPEC. NO. PS-D-303	FE-C-4619-A-10

APPROVED FOR SAFETY — SAFETY OFFICE — DATE OCT 20 1962

MSFC MASTER BID DISK 11-18-2013

SOLVAY PRESS, INC., BROOKLYN 17, N.Y. STOCK NO. 649

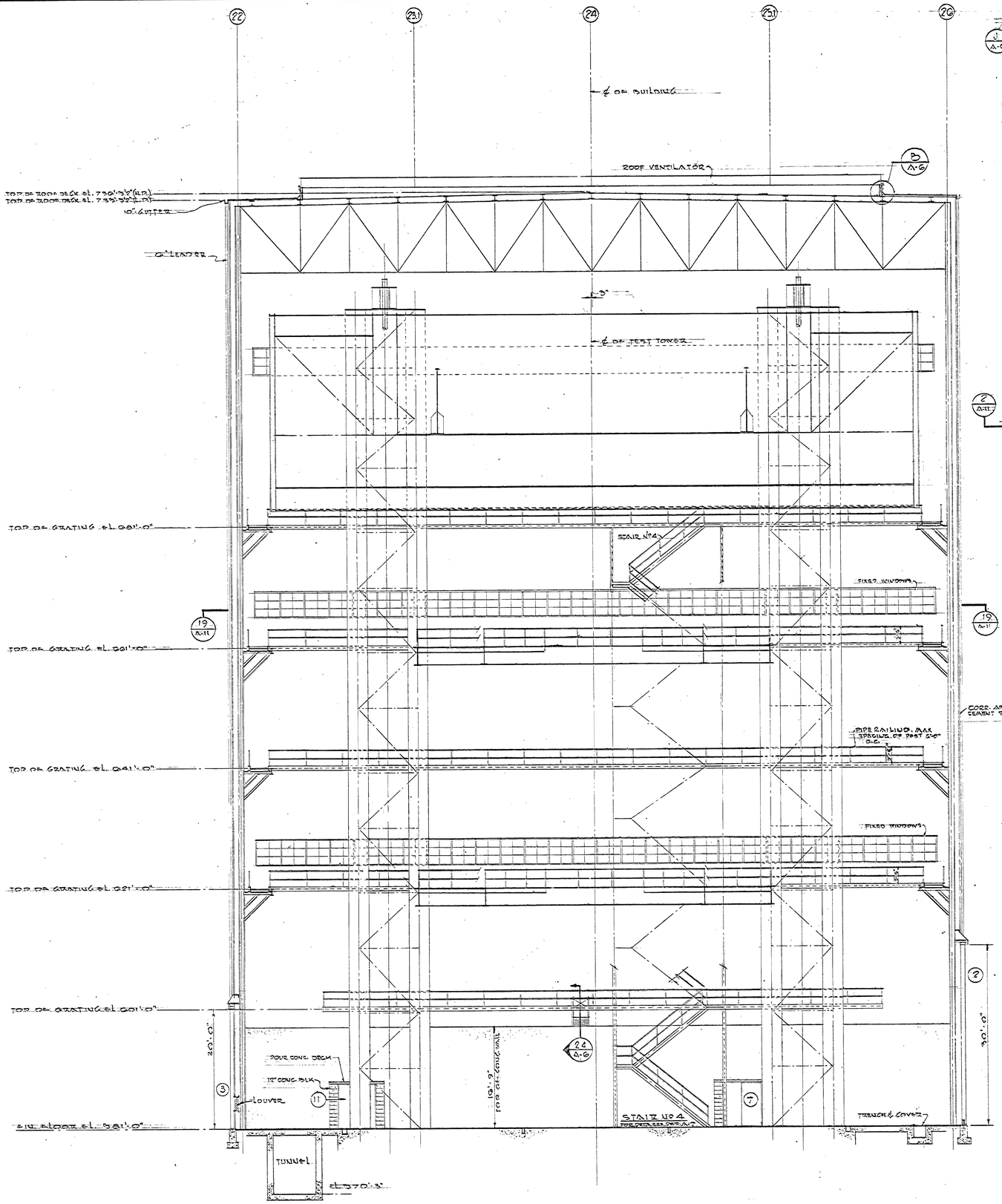

SECTION - "2-2"

SCALE: 1/8" = 1'-0"

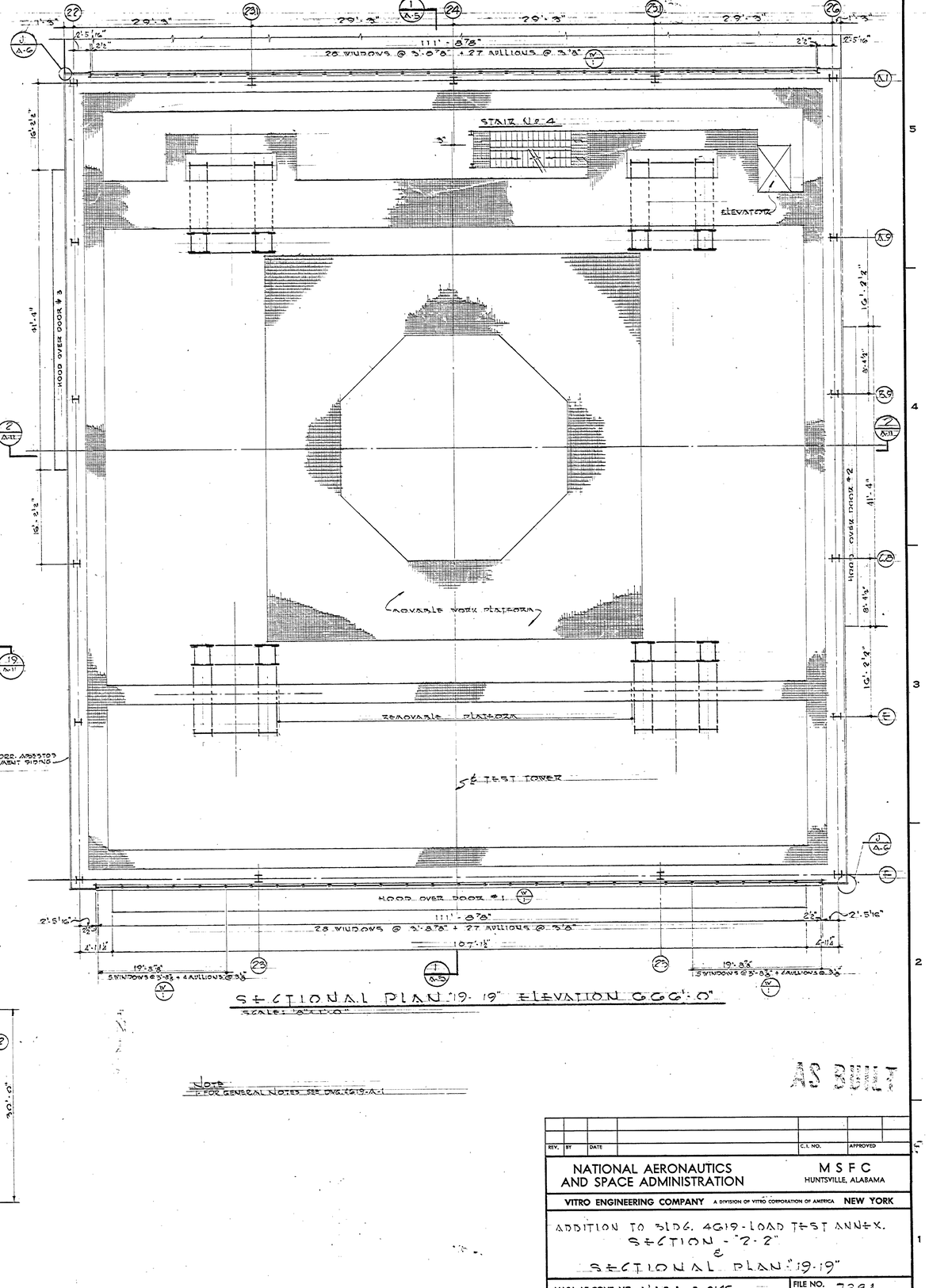

SECTIONAL PLAN "19-19" ELEVATION 668'-0"

SCALE: 1/8" = 1'-0"

Note
1. FOR GENERAL NOTES SEE DWG. E619-A-1

AS BUILT

REV.	BY	DATE		C.I. NO.	APPROVED

NATIONAL AERONAUTICS AND SPACE ADMINISTRATION — MSFC HUNTSVILLE, ALABAMA

VITRO ENGINEERING COMPANY A DIVISION OF VITRO CORPORATION OF AMERICA NEW YORK

ADDITION TO BLDG. 4619 - LOAD TEST ANNEX.
SECTION - "2-2"
&
SECTIONAL PLAN "19-19"

NASA AE CONT. NO. NASA 8-2145		FILE NO. MSFC 7394
SUBMITTED: CHIEF DES. E&D2 DATE: 10-10-62	APPROVAL RECOMMENDED:	APPROVED: CHIEF, ENGINEERING BRANCH
AE: DATE: SEPT. 14, 1962	LAB: DATE: 10-22-62	NASA: DATE: 10-25-62
DESIGNED RFL DRAWN H.D.S. 9-15-62 T.S. CHECKED L.L.S. 9-15-62 S.R.	APPROVAL RECOMMENDED: CHIEF, DESIGN SECTION DESIGN DATE:	DRWG. NO. FE-C-4619-A-11
SCALE: 1/8" = 1'-0"	SPEC. NO. FE-D-303	

APPROVED FOR SAFETY
Gilbert Mayo OCT 22 1962
CHIEF, SAFETY OFFICE — DATE

MSFC MASTER BID DISK 11-18-2013

MSFC-FORM 232 (REV. DEC., 1960)

GIBLIN PRESS, INC., ROCHESTER 23, N.Y. STOCK NO. 449

FOUNDATION PLAN

SCALE: 1/8"=1'-0"

SECTION AA

SCALE: 1/8"=1'-0"

SECTION B-B

SCALE: 1/8"=1'-0"

SECTION Y-Y

SCALE: 1/8"=1'-0"

SECTION EE-EE

SCALE: 1/8"=1'-0"

SECTION X-X

SCALE: 1"=1'-0"

DETAIL "A"

SCALE: 1/2"=1'-0"

ROCK SHEAR KEY

(TYP. FOR ALL COLUMN PIERS)

SCALE: 1/2"=1'-0"

WELDED SPLICE DETAIL

(FOR #14S & #18S REINF. BARS)

NO SCALE

LADDER DETAIL

NO SCALE

DETAIL "1"

NO SCALE

ANCHOR PLATES MAY BE FABRICATED IN SEGMENTS, MIN. SIZE 2'-11" SQ. (4-BOLTS EA. 12)

NOTES:

1. FOR GENERAL NOTES SEE DWG. # S-3.
2. WIDEN THIS DRAWING WITH DWG. # S-3 & # S-4.
3. CONTRACTOR SHALL HAVE THE OPTION TO USE 36"ϕ DRILL CAISSON FOR COLUMN PIERS A1-24, B.9-26, C.8-26 AND E-24
4. THIS AREA SHALL BE KEPT CLEAR FOR FUTURE ELECTRICAL TRAYS
5. FOR ROCK DOWEL DETAILS, SEE DWG # S-3
6. 6" POLY-VINYL CHLORIDE WATERSTOP SHALL BE EMBEDDED AT ALL JOINTS BETWEEN TUNNEL WALLS AND SLABS.

REV.	BY	DATE		C.I. NO.	APPROVED
1	W.O.S.	9-9-63	ADDED ROCK DOWEL IN ELEVATION SEC. ADDED NOTE 6 ADDED IN SECTS. AA & BB	5512-1	GES
2	W.O.S.	8-21-63	WIDEN TUNNEL AS PER DWGS # S-3 & # S-4		
3	W.O.S.	7-30-63	DIM. DIST. & CHG'D. DIM. ADDED SIZE OF TRENCH ADDED IN BASEMENT SLAB		
4	W.O.S.	7-9-63	OPENING ADDED IN SECT. W-W		

REV.	BY	DATE		C.I. NO.	APPROVED
1	Q.R.S.	6-19-63	LOCATED PADS FOR PUMPS & CHILLER	5512-17	GES
2	J.B.H.	5-13-63	REVISED SUB FLOOR DRAINAGE	5512-12	

APPROVED FOR SAFETY — JSC SECURITY SAFETY OFFICE — DATE

REV.	BY	DATE		C.I. No.	APPROVED
3	W.O.S.	10-15-62	SLOPE 15% TO 10% REV.	5512-3	

NATIONAL AERONAUTICS AND SPACE ADMINISTRATION — M S F C — HUNTSVILLE, ALABAMA

VITRO ENGINEERING COMPANY A DIVISION OF VITRO CORPORATION OF AMERICA NEW YORK

ADDITION TO BUILDING 4619 - LOAD TEST ANNEX

FOUNDATION - PLAN & SECTIONS

NASA AE CONT. NO. NASA 8-2165 — FILE NO. M S F C -336

SUBMITTED W.F. Wagner 5-18-62	APPROVAL RECOMMENDED:	APPROVED:	
CHIEF DES. ENGR. 5-18-62		CHIEF, DESIGN BRANCH	
AE DATE MAY 18, 1962	LAB. DATE 6-6-62	NASA DATE 6-6-62	
DESIGNED R.T. & N.C.	APPROVAL RECOMMENDED:	DRWG. NO.	
DRAWN T.T. & N.C.	CHIEF, CIVIL-STRUCTURES SECTION	FE-0-4619-S-1	
CHECKED S.Y.C.	DESIGN DATE 6-6-62		
SCALE AS NOTED	SPEC. NO. 215		

MSFC-MASTER BID DISK 11-18-2013

MSFC-FORM 232 (REV. DEC. 1960)

NOTICE — WHEN GOVERNMENT DRAWINGS, SPECIFICATIONS, OR OTHER DATA ARE USED FOR ANY PURPOSE OTHER THAN IN CONNECTION WITH A DEFINITELY RELATED GOVERNMENT PROCUREMENT OPERATION, THE UNITED STATES GOVERNMENT THEREBY INCURS NO RESPONSIBILITY NOR ANY OBLIGATION WHATSOEVER; AND THE FACT THAT THE GOVERNMENT MAY HAVE FORMULATED, FURNISHED, OR IN ANY WAY SUPPLIED THE SAID DRAWINGS, SPECIFICATIONS OR OTHER DATA IS NOT TO BE REGARDED BY IMPLICATION OR OTHERWISE AS IN ANY MANNER LICENSING THE HOLDER OR ANY OTHER PERSON OR CORPORATION, OR CONVEYING ANY RIGHTS OR PERMISSION TO MANUFACTURE, USE, OR SELL ANY PATENTED INVENTION THAT MAY IN ANY WAY BE RELATED THERETO.

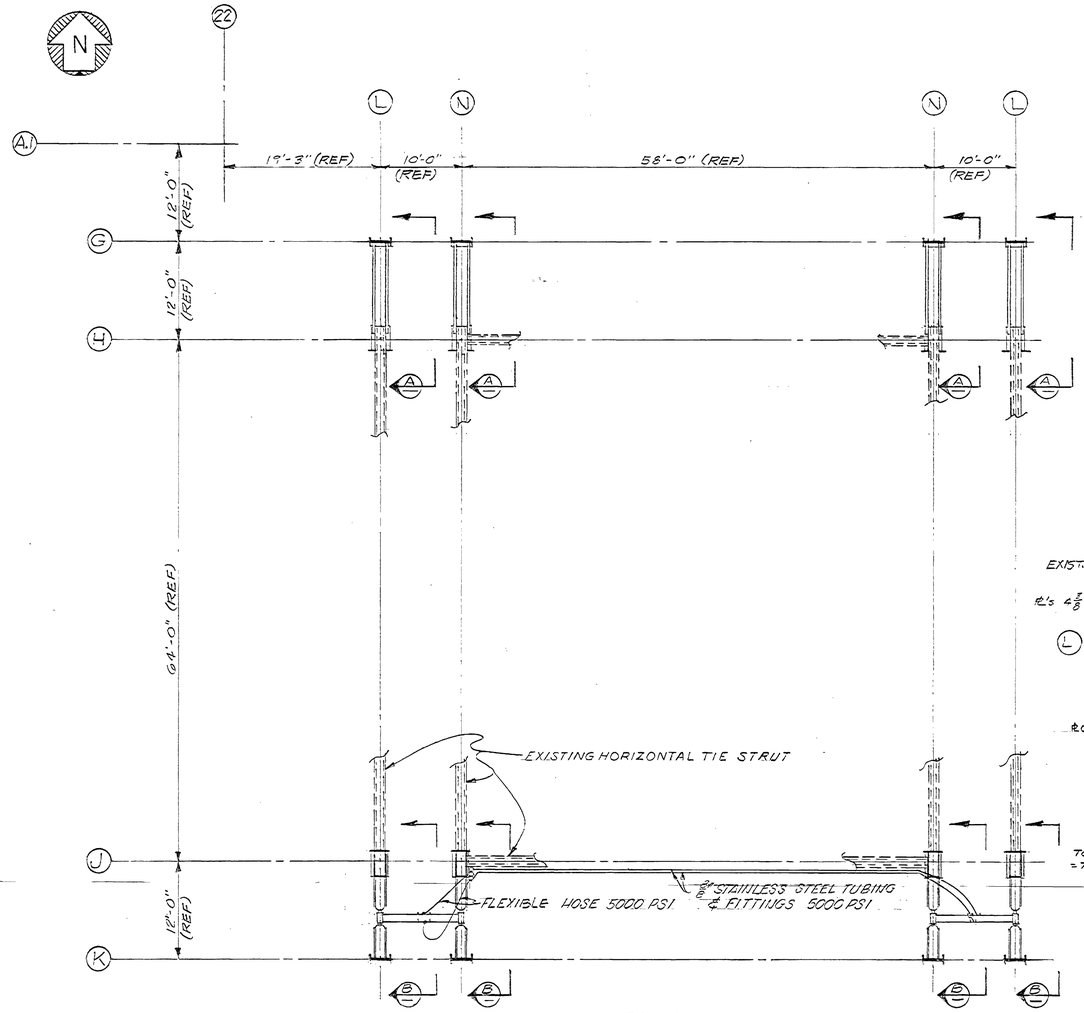

PLAN
SCALE: 1/8" = 1'-0"

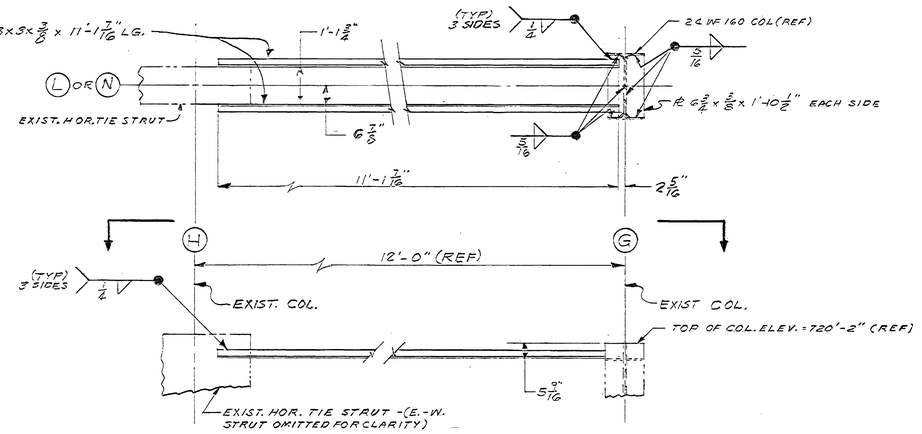

SECTION A
SCALE: 1/2" = 1'-0"

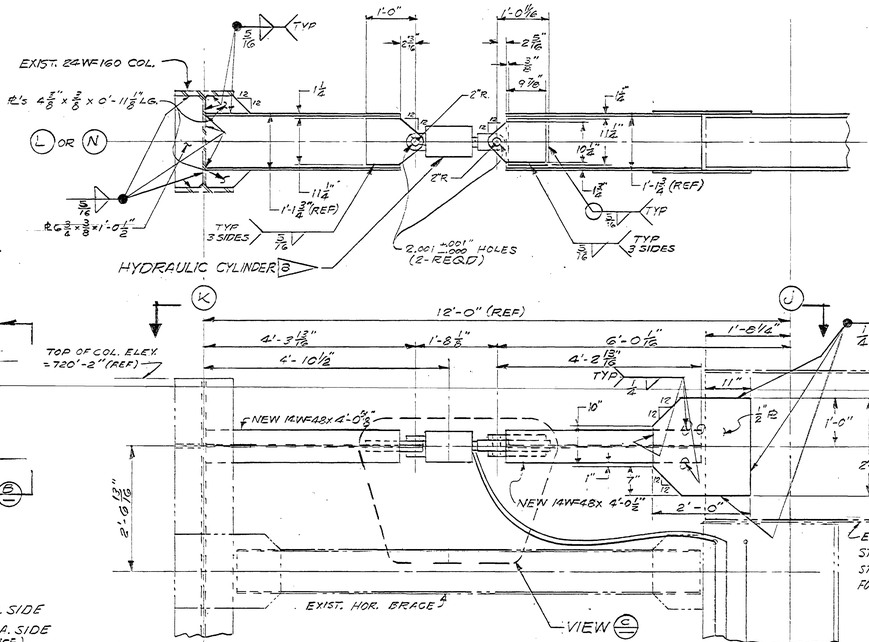

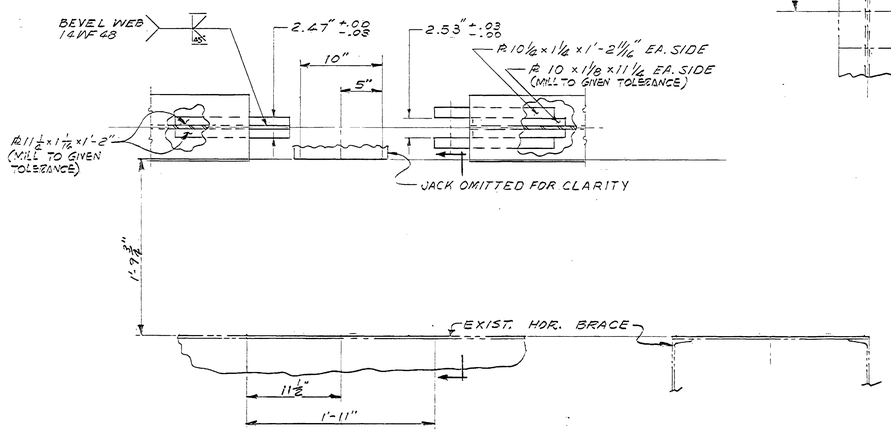

VIEW C
SCALE: 1 1/2" = 1'-0"

GENERAL NOTES:

1. ALL STRUCTURAL STEEL SHALL CONFORM TO ASTM A-36 SPECIFICATIONS UNLESS OTHERWISE NOTED.
2. DESIGN, FABRICATION AND ERECTION SHALL BE IN ACCORDANCE WITH LATEST A.I.S.C. SPECIFICATIONS, & A.W.S. STD. SPEC. FOR WELDED HIGHWAY AND RAILWAY BRIDGES (D2.0-63)
3. MILLER FLUID POWER, DIVISION OF FLICK-REEDY CORP., 7N015 YORK ROAD, BENSENVILLE, ILLINOIS. 4 MODEL H84 HYDRAULIC CYLINDERS WITH 6" BORE, 6" MIN. STROKE, 5000 PSI RATED CYLINDER TO OPERATE AT 2140 PSI. PISTON ROD DIAMETER OF 2 1/2"; PISTON ROD END STYLE #2 STANDARD. SINGLE ACTION FLUID TO ENTER ROD END. 4 ROD EYES FOR ROD END ABOVE, AND 8 - 2.000" +.001 -.000 DIA. PINS.
4. ALL WELDING SHALL BE DONE BY SHIELDED ARC PROCESS WITH A233 CLASS E7018 SERIES ELECTRODES OR BY SUBMERGED ARC WITH GRADE SAW-2 ELECTRODES.
5. PIN HOLES SHALL NOT BE CUT OR ENLARGED BY FLAME CUTTING.
6. ALL TUBING AND FITTINGS SHALL BE STAINLESS STEEL 5000 PSI. ALL FLEXIBLE HOSE SHALL BE RATED AT 5000 PSI.

DESIGN LOAD:
50 KIPS PER JACK

REV.	BY	DATE		C.I. NO.	APPROVED

NATIONAL AERONAUTICS AND SPACE ADMINISTRATION — M S F C — HUNTSVILLE, ALABAMA

LOAD TEST ANNEX — BUILDING 4619
TOWER JACKING SYSTEM
TO RELIEVE TOWER CAMBER
PLANS AND DETAILS

W.O. 1609-65 | FILE NO. M S F C

SUBMITTED: CHIEF [illegible] | APPROVAL RECOMMENDED: CHIEF, TECHNICAL DESIGN SECTION | APPROVED: CHIEF DESIGN BRANCH V

A.E. DATE: 19 MARCH 65 | L.A.R. DATE: 7-10-65 | NASA DATE: 7-19-65

DESIGNED: Hixson | DRAWN: JTC | CHECKED: Burr | SCALE: NOTED

APPROVAL RECOMMENDED: CHIEF STRUCT. SECTION | DESIGN DATE: 7-10-65 | SPEC. NO.

DRWG. NO. FE-C-4619-S1A

APPROVED FOR SAFETY — SAFETY OFFICE — 5/14/65 DATE

S-1

MSFC MASTER BID DISK 11-18-2013

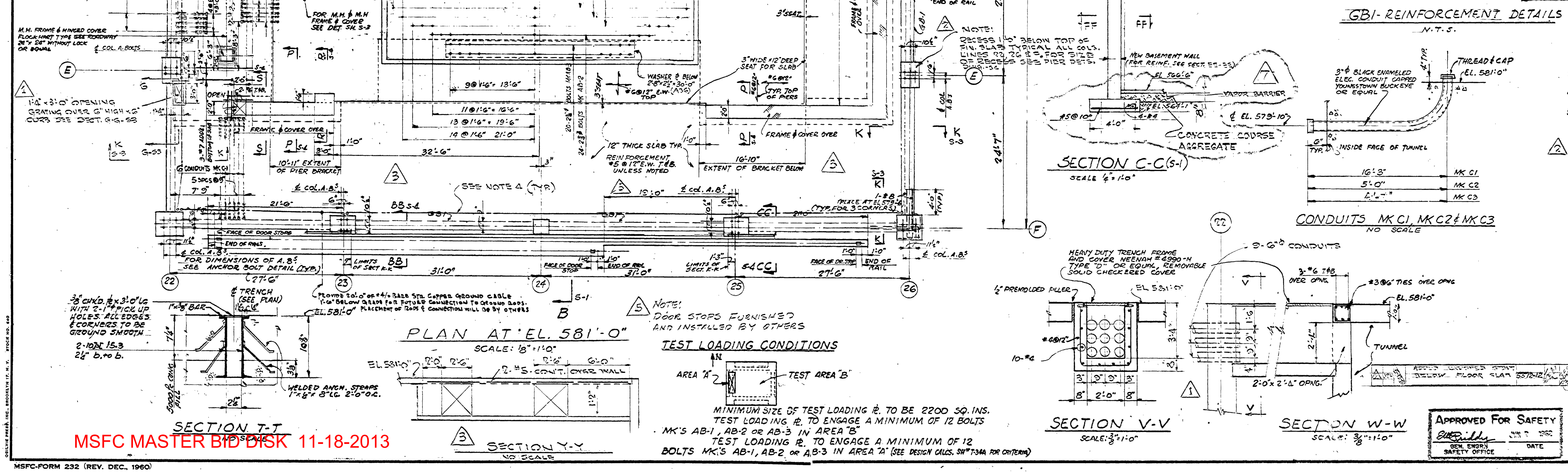

REV.	BY	DATE		C.I. NO.	APPROVED	
6	W.O.S.	12-14-62	ADDED NOTES, REVISED DIMS & ADDED RE-STEEL IN BEAM POCKETS - SECT. D-D. ADDED OPENINGS - IN PLAN	5512-7	GES	GES
5	W.O.S.	10-15-62	LOCATION OF BLDG. NORTH-SOUTH DIRECTION ADDED. OPENING IN FLOOR DELETED, DOOR TRACK & FDN. EXTENDED, NOTE ADDED.	5512-3	EJK	GES

NOTES:
1. FOR GENERAL NOTES SEE DWG. S-3
2. WORK THIS DWG. WITH DWG'S. S-1, S-3 & S-4.
3. ALL ANCHOR BOLTS MK AB-1, AB-2 & AB-3 & SLEEVES SHALL BE ACCURATELY SET WITHIN TOLERANCES AS NOTED FOR MK AB-1.
4. #4/0 BARE STRANDED COPPER GROUND CABLE RUN IN FLOOR SLAB & TO BE LOOPED BETWEEN COLUMNS INDICATED.
5. STUB UP 4'-0" OF SLACK #4/0 BARE STRANDED COPPER GROUND CABLE ABOVE SLAB AT COLUMN BASE. FOR A.1-22, A.9-22, C.8-22, F-22, F-23, F-25, F-26, C.8-26, A.9-26 & A.1-26
6. SHOP DWG. SHOWING PROPOSED CONSTRUCTION JOINTS SHALL BE SUBMITTED BY THE CONTRACTOR FOR APPROVAL BY THE CONTRACTING OFFICER'S REPRESENTATIVE, PRIOR TO SUBMITTING RE-STEEL SHOP DWGS. FOR APPROVAL.
7. SEE DWG. S-2A FOR TOWER EMBEDMENT STEEL (REF. TO SPECS. SECTION No. 7)

REV.	BY	DATE		C.I. NO.	APPROVED	
4	W.O.S.	10-6-62	SLEEVE SHAPE REVISED	5512-1 (REV)	EJK	
3	W.O.S.	9-10-62	OMITTED NOTES, ADDED SECT. XX & SECT. Y-Y, SECT. Z-Z, ETC.	5512-1	GES	
2	W.O.S.	7-20-62	ADDED NOTES, CHG'D OPENINGS & UNITS IN SLAB, CHG'D OPN. IN SECTION D-D ETC.	—	EJK	
1	W.O.S.	7-9-62	TRENCH OMITTED AND CONDUITS ADDED	—	EJK	

NATIONAL AERONAUTICS AND SPACE ADMINISTRATION — MSFC, HUNTSVILLE, ALABAMA

VITRO ENGINEERING COMPANY — A DIVISION OF VITRO CORPORATION OF AMERICA — NEW YORK

ADDITION TO BUILDING 4619 - LOAD TEST ANNEX

FLOOR PLAN & SECTIONS

NASA AE CONT. NO. NASA 8-2145
FILE NO. MSFC 7397

SUBMITTED: H. L. Meyer 5-18-62
CHIEF DES. ENGR.
AE: DATE: MAY 18, 1962
APPROVAL RECOMMENDED:
LAB: DATE: 6-6-62
APPROVED:
CHIEF, DESIGN BRANCH
NASA DATE: 6-6-62

DESIGNED T.T. & N.C.
DRAWN T.T. & N.C.
CHECKED S.Y.C.
SCALE: AS NOTED
APPROVAL RECOMMENDED:
CHIEF, STRUCT. SECTION
DESIGN DATE: 6-6-62
SPEC. NO. 215
DRWG. NO. FE-C-4619-S-2

NOTE:
TOLERANCES FOR ANCHORAGES SHALL BE APPROVED PRIOR TO POURING CONCRETE.

5"x1" - PREMOULDED JOINT FILLER AROUND ALL COLS. (SEE DET. 'A')

PITCH CONCRETE IN COLS. TO 3" ϕ WEEP HOLE (TYP.) TOTAL PITCH = 6"

SECTION D-D - AS SHOWN
SECTION D'-D' - OPP. HAND
SCALE: 1/2" = 1'-0"

PLAN
SCALE: 1/8" = 1'-0"

SECTION C-C
SCALE: 1/2" = 1'-0"

SECTION F-F
SCALE: 1/2" = 1'-0"

TYPICAL DETAIL FOR COLS. KL & KN
SCALE: 1/2" = 1'-0"

SECTION B-B
SCALE: 1/2" = 1'-0"

SECTION A-A
SCALE: 1/2" = 1'-0"

SECTION E-E
SCALE: 1/2" = 1'-0"

ALTERNATE BOX COL. DETAIL
SCALE: 1" = 1'-0"

TYPICAL DET. FOR COLS. GL & GN
SCALE: 1/2" = 1'-0"

GENERAL NOTES:

1. ALL BOLTS SHALL BE 7/8ϕ HIGH-STRENGTH (UNLESS OTHERWISE NOTED)
2. FOR SUBDRILLING OF PLATES, SEE SPECS.
3. ALL BOX COLUMNS TO BE CONCRETE FILLED.

DETAIL 'A'
NO SCALE

REV.	BY	DATE		C.I. NO.	APPROVED
1	W.O.S.	10-15-62	DIMS. REVISED	5512-3	
2	W.O.S.	10-15-62	BASE PL. SIZES & WELD REVISED	5512-1 (Rev)	
3	W.O.S.	9-27-62	BOLTS IN WEB PLS. DELETED	5512-1 (Rev)	
4	W.O.S.	9-10-62	RE-DRAWN - ADDED BRACING AND CONNECTIONS AND COLS. ON K-LINE	5512-1	

NATIONAL AERONAUTICS AND SPACE ADMINISTRATION
MSFC
HUNTSVILLE, ALABAMA

ADDITION TO BUILDING 4619 - LOAD TEST ANNEX
TEST TOWER COLUMNS
SETTING TOLERANCES

NASA AE CONT. NO. NASA 8-2145
FILE NO. MSFC T465

SUBMITTED: CHIEF AE: DATE:	APPROVAL RECOMMENDED: LAB: DATE:	APPROVED: CHIEF, ENGINEERING BRANCH NASA DATE:
DESIGNED VITRO ENGR. DRAWN STEADING CHECKED SCALE: AS NOTED	APPROVAL RECOMMENDED: CHIEF, DESIGN SECTION DESIGN DATE: SPEC. NO. 215	DRWG. NO. FE-C-4619-52A

MSFC MASTER BID DISK - 11-18-2013

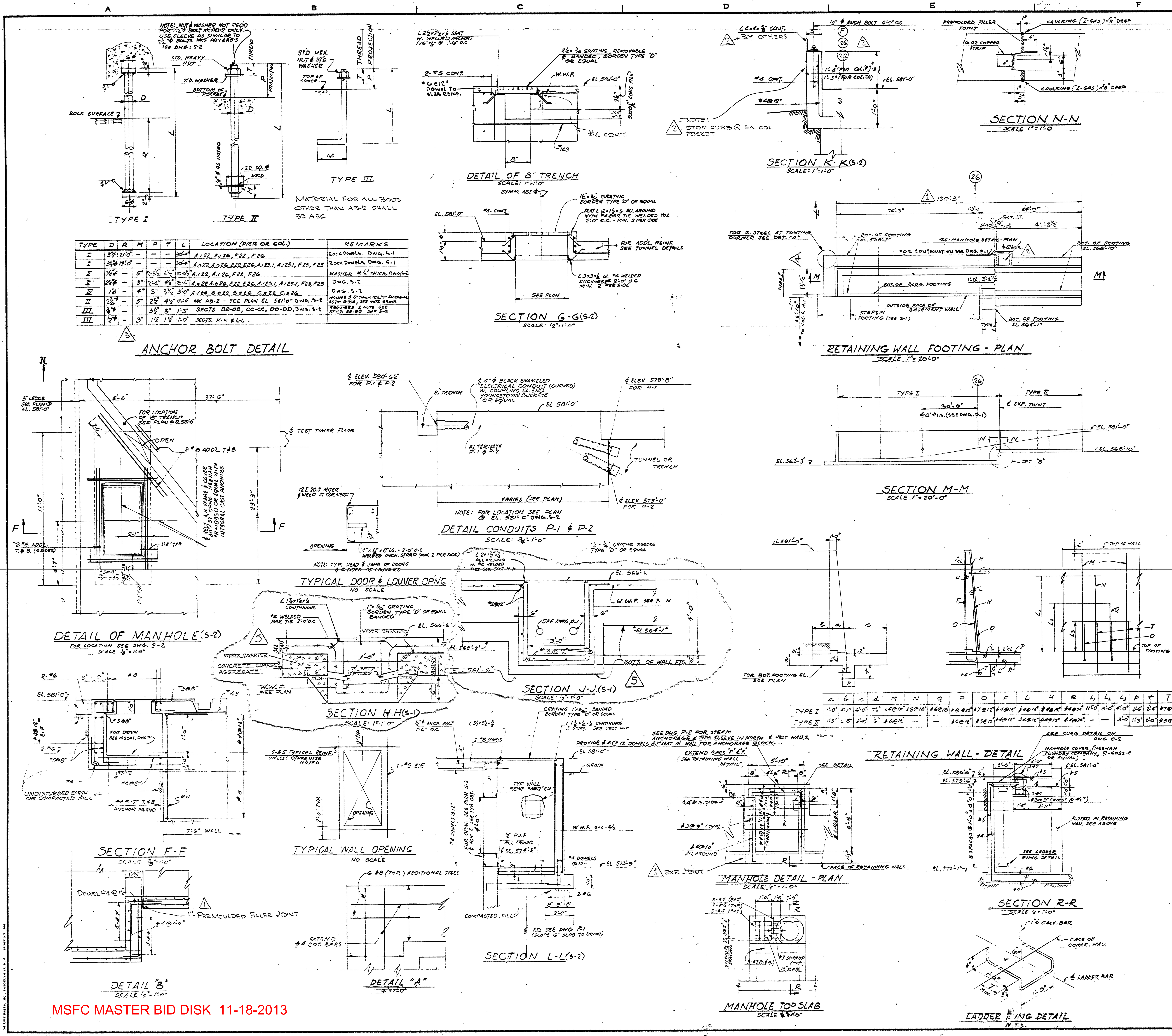

TYPE	D	R	M	P	T	L	LOCATION (PIER OR COL.)	REMARKS
I	3"φ	21'-0"	—	—	—	30'-4"	A.122, A.126, F22, F26	Rock Dowels, DWG. S-1
I	3½"φ	19'-0"	—	—	—	30'-4"	A.922, A.926, E22, E26, A.123.1, A.125.1, F23, F25	Rock Dowels, DWG. S-1
II	3¼"φ	—	5"	2'-5½"	4½"	10'-6½"	A.122, A.126, F22, F26	WASHER P ½" THICK, DWG S-2
II	2¼"φ	—	3"	2'-4"	4½"	8'-4"	A.922, A.926, E22, E26, A.123.1, A.125.1, F23, F25	DWG. S-2
III	1"φ	—	4"	5"	3½"	3'-0"	A.124, B.922, B.926, C.822, C.826	DWG. S-2
II	2¾"φ	—	5"	2½"	4½"	13'-5"	MK AB-2 - SEE PLAN EL. 581'-0" DWG. S-2	WASHER P ½" THICK ... MATERIAL ASTM A-358, SEE NOTE ABOVE
III	¾"φ	—		3½"	3"	1'-3"	SECTS BB-BB, CC-CC, DD-DD, DWG. S-2	REQUIRES 2 NUTS SEE SECT. BB-BB SH # S-4
III	½"φ	-	3"	1½"	1½"	1'-0"	SECTS. K-K & L-L.	

	a	b	c	d	M	N	Q	P	O	F	L	H	R	L_1	L_2	L_3	p	t	T
TYPE I	1'-8"	4'-1"	6'-0"	7½"	#6@18"	#6@18"	#6@18"	#8@12"	#7@12"	#4@12"	#4@12"	#4@12"	#4@24"	11'-0"	8'-0"	4'-0"	1'-6"	2'-4"	#7@12"
TYPE II	1'-3"	2'-8"	3'-10"	6"	#6@12"	—	—	#6@12"	#5@12"	#4@12"	#4@12"	#4@12"	#4@24"	—	—	3'-0"	1'-3"	2'-0"	#5@12"

GENERAL NOTES

1. All materials and workmanship shall comply with Project specifications.
2. Contractor shall verify all dimensions including equipment connections and anchor bolts in field, from equipment manufacturer's certified drawings which have been approved by the Contracting Officer.

DESIGN DATA

1. Design in accordance with the A.C.I. Building Code (ACI 318-56), A.W.S. Standard Code for Welding in Building Construction, A.I.S.C. Specifications for the Design, Fabrication and Erection of Structural Steel for Buildings, and the Engineering Manual for Military Construction, Corps of Engineers.
2. Soil Pressure: Allowable gross soil bearing value = 3000 Lbs. per sq. ft. at 2'-0" below natural grade. Allowable rock bearing value = 50,000 Lbs. per sq. ft.
3. Live Loads:
   Office Area: 80 Lbs. per sq. ft.
   Test Area: 15,000 Lbs. capacity fork lift truck with front axle load equals 46,800 Lbs. and center to center of wheels are 6' apart. Impact = 25%.

CONCRETE

1. All concrete shall have a minimum compressive strength of 3,000 Lbs. per sq. inch after 28 days UNLESS OTHERWISE NOTED.
2. Chamfer all exposed concrete edges thus unless otherwise directed.
3. All reinforcing steel shall be deformed intermediate grade new billet steel ASTM A 15 (Fed. Spec QQ-S-632) unless otherwise noted and deformed in accordance with ASTM A 305 for #3 to #11 bars and ASTM A 408 for #14S and #18S bars.
4. Minimum concrete protection for reinforcing unless otherwise noted:
   General . . . . 1 Bar Dia. or as noted (3/4" min.)
   Slabs . . . . 3/4"
   Beams & Girders . . 1-1/2" over Stirrups
   Columns . . . . 1-1/2" over Ties
   Formed Surfaces Exposed to Ground or Weather. . . . 2"
   Unformed Surfaces Exposed to Ground . . . . 3"
   Bars to Clear Inserts in Walls, Slabs, or Ceilings.
5. Reinforcing Splice Data: Lap reinforcing bars min. 30 Dia. or 15". Splices may be tied together. Min. clear distance between adjacent splices or bars to be 1 Bar Dia., 1-1/2" or 1-1/3 times max. size coarse aggregate, whichever is greater. Welded bar splices for #14S and #18S bars shall be as detailed.
6. Dowels to be same size and spacing as wall and column reinforcing and to be spliced as noted above.
7. All reinforcing, steel, anchor bolts and embedded items shall be secured in position before placing concrete. See Electrical and Mechanical drawings for ducts, openings, sleeves, etc. not otherwise detailed.
8. Welded wire fabric reinforcing in slabs on grade shall be lapped 6" at sides and ends. ALL SLABS ON GRADE UNLESS OTHERWISE NOTED SHALL BE REINF. WITH 6x6 6/6 WELDED WIRE MESH.
9. For contraction joints in concrete slabs see Specifications and typical details.
10. Location of construction joints in concrete slabs and walls shall be approved by the Contracting Officer and shall conform to typical details.

STRUCTURAL STEEL

1. All structural steel shall conform to ASTM A36 unless otherwise noted.
2. Design, fabrication and erection shall be in accordance with the latest A.I.S.C. Specifications.
3. All fillet welds shall be 1/4" unless otherwise noted.
4. All welding shall be done by shielded arc process.
5. All steel connections shall be riveted with a min. of 2-7/8" dia. rivets per connection except as noted. HIGH STRENGTH BOLTS CONFORMING TO ASTM-A325 MAY BE USED AT CONTRACTOR'S OPTION.

MISCELLANEOUS

1. Backfilling against exterior basement walls shall be done after FIRST FLOOR SLAB IS IN PLACE.
2. All exterior faces of basement walls and tunnel walls shall be dampproofed.
3. WORK THIS SHEET WITH S-1, S-2 & S-4.

APPROVED FOR SAFETY — JUN 7 1962 — GEN. ENGR. SAFETY OFFICE — DATE

REV.	BY	DATE		C.I. NO.	APPROVED	
5	J.B.H.	5-13-63	ADDED SUB FLOOR DRAINAGE IN BASEMENT	5512-12		
4	W.O.S.	2-28-63	DIM. REVISED IN RETAINING WALL FOOTING PLAN	5512-8	GES	
3	W.O.S.	9-13-62	ANCHOR BOLT DETAILS CHANGED, DELETED EXP. JT. IN WALL FOOTING	5512-1	GES	
2	W.O.S.	7-23-62	MANHOLE RELOCATED, NOTE ADDED IN SECT. K-K			
1	W.O.S.	7-9-62	MANHOLE RELOCATED 25'-0" WEST, EXP. JT. RELOCATED & EXP. JT. ADDED IN FOOTING			

NATIONAL AERONAUTICS AND SPACE ADMINISTRATION — MSFC HUNTSVILLE, ALABAMA

VITRO ENGINEERING COMPANY A DIVISION OF VITRO CORPORATION OF AMERICA NEW YORK

ADDITION TO BUILDING 4619 - LOAD TEST ANNEX

FOUNDATION - SECTIONS & DETAILS - SH. 1

NASA AE CONT. NO. NASA 8-2145 — FILE NO. MSFC 7398

SUBMITTED: 5-18-62 — CHIEF DES. ENGR. — AE: DATE: MAY 18, 1962
APPROVAL RECOMMENDED: — LAB. DATE:
APPROVED: CHIEF, DESIGN BRANCH — NASA DATE: 6-6-62
DESIGNED N.C. & T.T. — DRAWN N.C. & T.T. — CHECKED S.Y.C.
APPROVAL RECOMMENDED: CHIEF, STRUCT. SECTION — DESIGN DATE: 6-6-62
SCALE: AS NOTED — SPEC. NO. 215
DWG. NO. FE-C-4619-S-3

MSFC MASTER BID DISK 11-18-2013

FORM NO. 1000.805-0

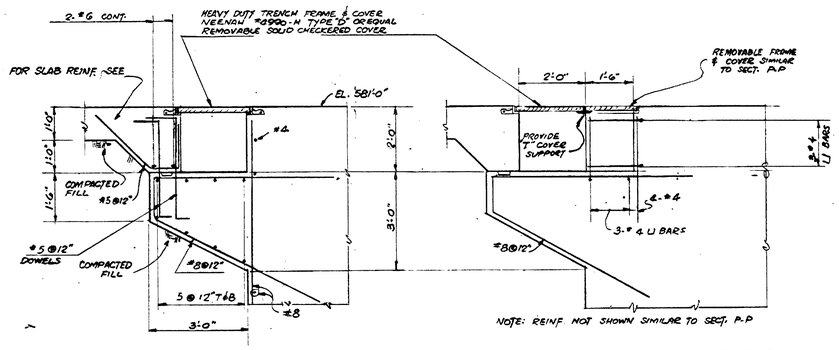

SECTION P-P (S-2)

SECTION R-R (S-2)

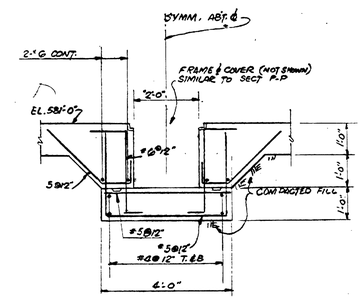

SECTION S-S (S-2)

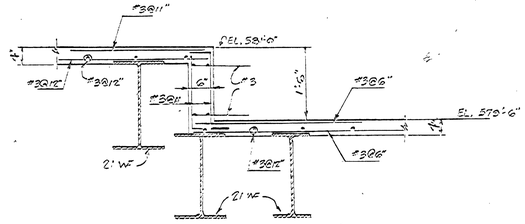

SECTION GG-G-G (S-2)
SCALE: 3/4"=1'-0"

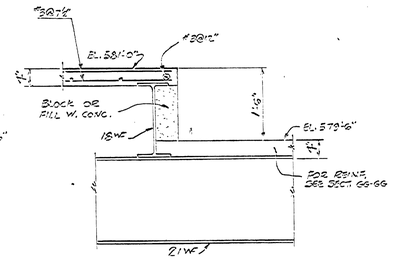

SECTION HH-HH (S-2)
SCALE 3/4"=1'-0"

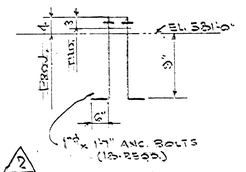

DETAIL "X"
NO SCALE

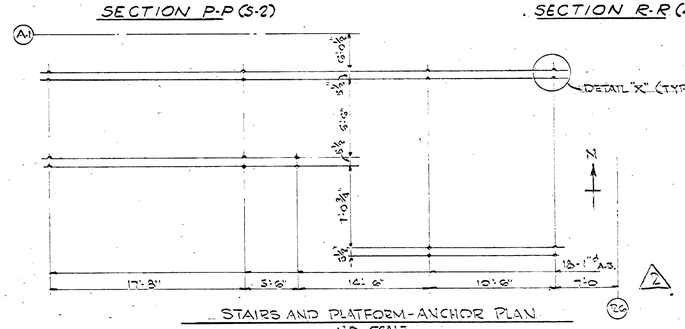

STAIRS AND PLATFORM-ANCHOR PLAN
NO SCALE

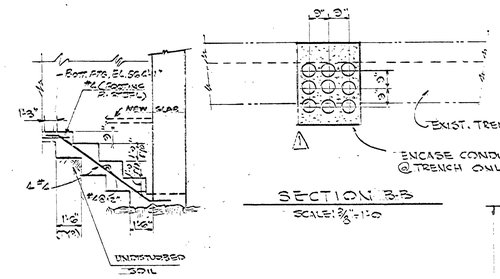

SECTION BB
SCALE: 3/8"=1'-0"

SECTION EE (S-1 & S-2)
SCALE: 1/8"=1'-0"

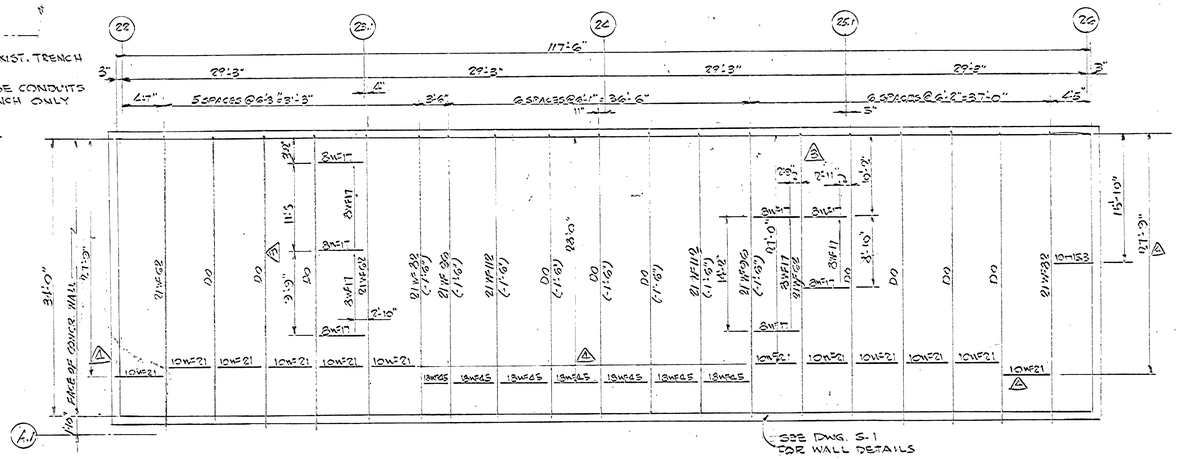

STEEL FRAMING PLAN
TOP OF STEEL EL. 580'-8½" UNLESS NOTED THUS (-2")
SCALE 3/32"=1'-0"

NOTE:
1. RELOCATED BEAMS MAY BE FIELD WELDED OR BOLTED.

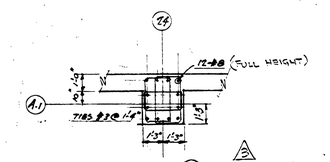

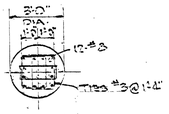

OPTIONAL COL PIER FOR COLS. B.9-26, C.8-26, F-24, C.8-22 B.9-22 & A.9-22

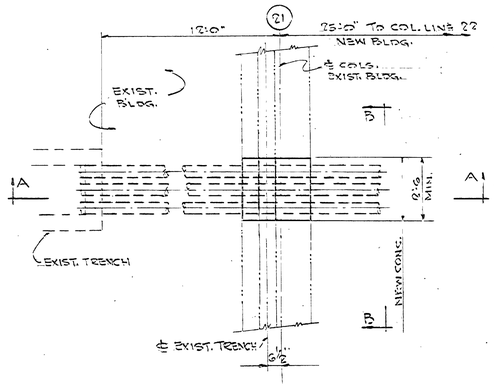

1 DETAIL A (S-2)
SCALE: 3/8"=1'-0"

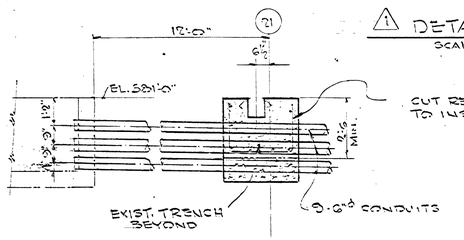

CUT REINFORCING AS REQUIRED TO INSTALL CONDUITS.

1 SECTION A-A
SCALE: 3/8"=1'-0"

NOTES:
1. FOR GENERAL NOTES SEE DWG. S-3.
2. WORK THIS DRAWING FOR DRAWINGS S-1, S-2 & S-3.

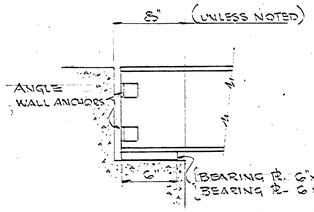

TYPICAL BEAM POCKET & SEAT
NO SCALE

PIER REINFORCEMENT DETAILS
SCALE ½"=1'-0"

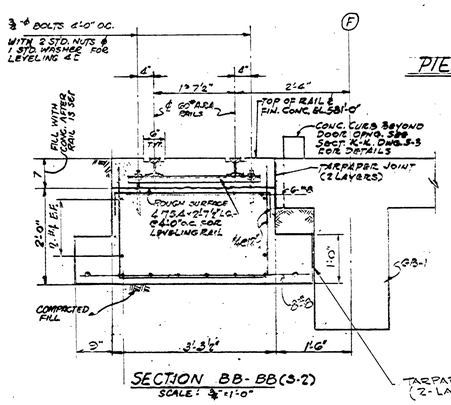

SECTION BB-BB (S-2)
SCALE: ½"=1'-0"

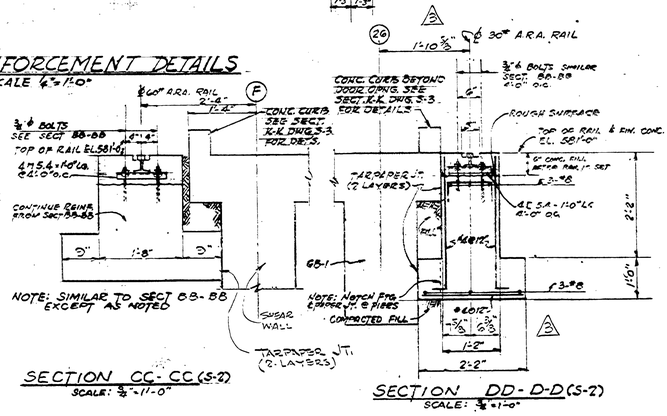

SECTION CC-CC (S-2)
SCALE: ½"=1'-0"

SECTION DD-D-D (S-2)
SCALE: ½"=1'-0"

REV.	BY	DATE	DESCRIPTION	C.I. NO.	APPROVED
4	WJOS	12-14-62	RELOCATED BEAMS IN STEEL FRAMING PLAN	55-12-7	GES
3	WJOS	10-29-62	DIMS. REVISED	55-12-3	GES
2	WJOS	7-10-62	ANCHOR BOLTS FOR STAIRS & PLATFORM ADDED	55-12-1	GES
1	WJOS	7-6-62	TRENCH OMITTED AND CONDUITS ADDED	—	GES

NATIONAL AERONAUTICS AND SPACE ADMINISTRATION — MSFC HUNTSVILLE, ALABAMA

VITRO ENGINEERING COMPANY A DIVISION OF VITRO CORPORATION OF AMERICA NEW YORK

ADDITION TO BUILDING 4619 - LOAD TEST ANNEX

FOUNDATION - SECTIONS & DETAILS - SH. 2

NASA AE CONT. NO. NASA 8-2185 — FILE NO. MSFC -399

SUBMITTED: H.E. Wing 5-18-62	APPROVAL RECOMMENDED:	APPROVED:	
CHIEF, DES. SUBDIV.		CHIEF, SECTION	BRANCH
A/E DATE: MAY 18, 1962	LIAISON DATE: 6-6-62	NASA DATE: 6-6-62	
DESIGNED T.T. & M.C.	APPROVAL RECOMMENDED:		DWG. NO.
DRAWN T.T. & M.C.	CHIEF, STRUCT. SECTION		
CHECKED S.Y.C.	DESIGN DATE: 6-6-62		FE-C-4619-S-4
SCALE: AS NOTED	SPEC. NO. 215		

APPROVED FOR SAFETY
JUN 7 1962
GEN. ENGRG. SAFETY OFFICE — DATE

MSFC MASTER BID DISK 11-18-2013

MSFC-FORM 232 (REV. DEC. 1960)

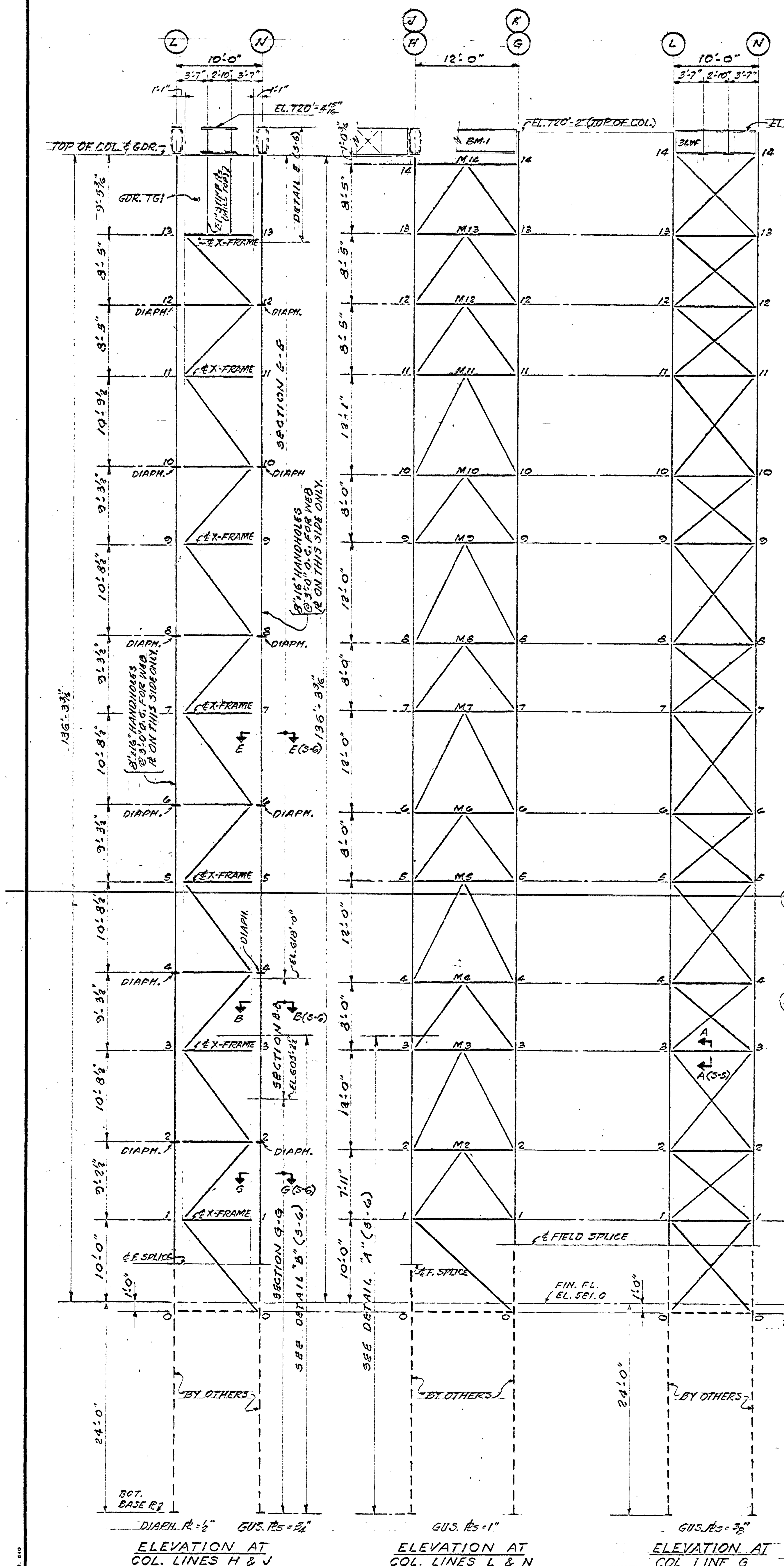

ELEVATION AT COL. LINES H & J

ELEVATION AT COL. LINES L & N

ELEVATION AT COL. LINE G

TOWER BRACING

NW & NE TOWERS — ALONG COL. LINE H

MEMBER No	STRESS KIPS	SHAPE	SECTION	No OF BOLTS	REMARKS
N_0-L_1	±250	2'-8½" IN-IN GUS. PLS	2-FLG. PLS 8"×⅝" ⅜" WEB PL.	28	
L_1-N_2	±225				
N_2-L_3	±244				
L_3-N_4	±225				
N_4-L_5	±182			24	
L_5-N_6	±169				
N_6-L_7	±122	2'-8½" IN-IN GUS. PLS	2-FLG. PLS 8"×½" 5/16" WEB PL.	20	
L_7-N_8	±113				
N_8-L_9	±81				
L_9-N_{10}	±75				
$N_{10}-L_{11}$	±81				
$L_{11}-N_{12}$	±70				
$N_{12}-L_{13}$	±70				
—	—				
L_2-N_2	M_x=1048'K		30WF190	STD AISC HH CONN PLUS 16 IN. FLGS	
L_4-N_4	do				
L_6-N_6	do				
L_8-N_8	do				
$L_{10}-N_{10}$	M_x=1048'K	8" HAND HOLE			
L_1-N_1	0	2'-8½" IN-IN GUSS. PL.	2-15[s 33.9 2 PLS 32"×⅜"	32	8"×12" HANDHOLES @3'-6". ⅜" DIAPH. PLS.
L_3-N_3	do	2'-8½" IN-IN GUS. PLS	2-FLG. PLS 8"×½" 5/16" WEB PL.	16	
L_5-N_5	do				
L_7-N_7	do				
L_9-N_9	do				
$L_{11}-N_{11}$	do				
$L_{12}-N_{12}$	0				
L_0-N_0	±144				NIC
GDR. TG1	M=3250'K R=870K		T.FLG. 32×1 WEB 112×⅝ B.FLG., PL 31½×⅜ 2 PLS 8×½	SEE DETAIL "E" (5-6)	4-BRG. STIFF PLS 15½×1 (MILL TOP)

SW & SE TOWERS — ALONG COL. LINE J

MEMBER No	STRESS KIPS	SHAPE	SECTION	No OF BOLTS	REMARKS
N_0-L_1	±171	2'-8½" IN-IN GUS. PLS	2-FLG. PLS 8"×⅝" ⅜" WEB PL.	28	
L_1-N_2	do			24	
N_2-L_3	do				
L_3-N_4	do				
N_4-L_5	do				
L_5-N_6	do				
N_6-L_7	do				
L_7-N_8	do				
N_8-L_9	do				
L_9-N_{10}	do				
$N_{10}-L_{11}$	do				
$L_{11}-N_{12}$	do				
$N_{12}-L_{13}$	±171				
—	—	8" HAND HOLE			
L_1-N_1	M_x=225'K ±90K	2'-8½" IN-IN GUSS. PL.	2-15[s 33.9 2 PLS 32"×⅜"	32	8"×12" HANDHOLES @3'-0". ⅜" DIAPH. PLS.
L_2-N_2	M_x=225'K	2'-8½" IN-IN GUS. PLS	2-FLG. PLS 8"×⅝" ⅜" WEB PL.	16 IN. FLGS PLUS 5 IN. WEB	2
L_3-N_3	M_x=225'K ±90K				
L_4-N_4	M_x=225'K				
L_5-N_5	M_x=225'K ±90K				
L_6-N_6	M_x=225'K				2
L_7-N_7	M_x=225'K ±90K				
L_8-N_8	M_x=225'K				
L_9-N_9	M_x=225'K ±90K				
$L_{10}-N_{10}$	M_x=225'K				
$L_{11}-N_{11}$	M_x=225'K ±90K				
$L_{12}-N_{12}$	M_x=225'K				
L_0-N_0	±102K		2-FLG. PLS 8"×½" 5/16" WEB PL.	16	NIC
GDR. TG1	M=3250'K R=870K		T.FLG. 32×1 WEB 112×⅝ B.FLG., PL 31½×⅜ 2 PLS 8×½	SEE DETAIL "E" (5-6)	4-BRG. STIFF. PLS 15½×1 (MILL TOP)

NW & NE TOWERS — ALONG COL. LINE L & N

MEMBER No	STRESS KIPS	SHAPE	SECTION	No OF BOLTS	REMARKS
G_0-H_1	+680		2-15[40.0 2-PLS 24×⅜	76	HANDHOLES 8"×12" IN COV. PLS. @3'-6" oc
G_1-M_2 / M_2-H_1	-429 / +416		2-15[33.9 2-PL (24×⅜)	48	
G_3-M_4 / M_4-H_3	-429 / +416			48	
G_5-M_6 / M_6-H_5	-434 / +421			52	
G_2-M_3 / M_3-H_2	∓562		2-15[40 2-PLS (24×⅜)	64	
G_4-M_5 / M_5-H_4	∓510			60	
G_6-M_7 / M_7-H_6	∓341		2-10[s 20.0 2-PLS 24×5/16	38	2
G_7-M_8 / M_8-H_7	-335 / +322			38	
G_8-M_9 / M_9-H_8	∓290			34	
G_9-M_{10} / $M_{10}-H_9$	-335 / +322			38	
$G_{10}-M_{11}$ / $M_{11}-H_{10}$	∓290			34	
$G_{11}-M_{12}$ / $M_{12}-H_{11}$	∓320			36	
$G_{12}-M_{13}$ / $M_{13}-H_{12}$	∓320				
$G_{13}-M_{14}$ / $M_{14}-H_{13}$	∓320				
G_1-H_1	-250	8" HAND HOLE; 2'-0¾" IN-IN GUSS. PLS	2-15[s 33.9 2-PLS 24×⅜	56	
G_2-M_2 / M_2-H_2	-250 / +350, M_y=16.4'K		2-10[s 20.0 2-PLS 24×5/16	30 / 30-1"φ	
G_3-H_3	±250			28	
G_4-M_4 / M_4-H_4	-172 / +322, M_y=16.4'K			26 / 28-1"φ	
G_5-H_5	±253			30	
G_6-M_6 / M_6-H_6	-100 / +250, M_y=16.4'K			24 / 24-1"φ	
G_8-H_8	±130 M_y=16.4'K				
$G_{10}-H_{10}$	±130 M_y=16.4'K				
G_7-H_7	±195			24	
G_9-H_9	±195				
$G_{11}-H_{11}$	±195				
$G_{12}-H_{12}$	±195				
$G_{13}-H_{13}$	±195				8"×12" HANDHOLES
G_0-H_0	-500		2-15[s 33.9 2-PLS 24×⅜	64	NIC
$G_{14}-H_{14}$	±186		2-10[s 20.0 2-PLS 24×5/16	24	8"×12" HANDHOLES

SW & SE TOWERS — ALONG COL. LINE L & N

MEMBER No	STRESS KIPS	SHAPE	SECTION	No OF BOLTS	REMARKS
K_0-J_1	±122			22	HANDHOLES 8"×12" IN COV. PLS @ 3'-6" o.c.
J_1-M_2 / M_2-K_1	±79			24	
J_2-M_3 / M_3-K_2	±106				
J_3-M_4 / M_4-K_3	±79				
J_4-M_5 / M_5-K_4	±290	8" HAND HOLE; 2'-0¾" IN-IN GUSS. PLS	2-10[s 20.0 2-PLS 24×5/16	34	
J_6-M_7 / M_7-K_6	±290				
J_8-M_9 / M_9-K_8	±290				
$J_{10}-M_{11}$ / $M_{11}-K_{10}$	±290				
J_5-M_6 / M_6-K_5	±322			36	
J_7-M_8 / M_8-K_7	+322 / -328			38	
J_9-M_{10} / $M_{10}-K_9$	+322 / -328				
$J_{11}-M_{12}$ / $M_{12}-K_{11}$	±320			36	
$J_{12}-M_{13}$ / $M_{13}-K_{12}$	±320				
$J_{13}-M_{14}$ / $M_{14}-K_{13}$	±320				
J_1-K_1	±47	2'-0¾" IN-IN GUS. PLS	2-FLG. PLS 8"×⅝" 5/16" WEB PL.	20	
J_2-K_2	±47 M_y=8.5'K				
J_3-K_3	±125			20	
J_4-K_4	±130 M_y=8.5'K				
J_6-K_6	±130 M_y=8.5'K				
J_8-K_8	±130 M_y=8.5'K				
$J_{10}-K_{10}$	±130 M_y=8.5'K				
J_0-K_0	±47			12	NIC
J_7-K_7	±195	8" HAND HOLES; 2'-0¾" IN-IN GUSS. PLS	2-10[s 20.0 2-PLS 24×5/16	24	HANDHOLES 8"×12" IN COV. PLS. @ 3'-6" o.c.
J_9-K_9	±195				
$J_{11}-K_{11}$	±195				
$J_{12}-K_{12}$	±195				
$J_{13}-K_{13}$	±195				
J_5-K_5	±195				
$J_{14}-K_{14}$	±186				

NW, NE, SW & SE TOWERS — ALONG COL. LINE G & K

MEMBER No	STRESS KIPS	SECTION	No OF BOLTS	REMARKS
L_0-N_1 / N_0-L_1	±18	∠4×3×5/16	3	LONG LEG O.S.
L_1-N_2 / N_1-L_2	±16	∠4×3×5/16		
L_2-N_3 / N_2-L_3	±20	∠4×3×5/16		
L_3-N_4 / N_3-L_4	±16	∠4×3×5/16		
L_4-N_5 / N_4-L_5	±20	∠4×3×5/16		
L_5-N_6 / N_5-L_6	±16	∠4×3×5/16		
L_6-N_7 / N_6-L_7	±20	∠4×3×5/16		
L_7-N_8 / N_7-L_8	±16	∠4×3×5/16		
L_8-N_9 / N_8-L_9	±20	∠4×3×5/16		
L_9-N_{10} / N_9-L_{10}	±16	∠4×3×5/16		
$L_{10}-N_{11}$ / $N_{10}-L_{11}$	±20	∠4×3×5/16		
$L_{11}-N_{12}$ / $N_{11}-L_{12}$	±16	∠4×3×5/16		
$L_{12}-N_{13}$ / $N_{12}-L_{13}$	±16	∠4×3×5/16		
$L_{13}-N_{14}$ / $N_{13}-L_{14}$	±18	∠4×3×5/16		
L_1-N_1	0	2-∠s 3½×3×5/16	3	3½" LEG VERTICAL
L_2-N_2				
L_3-N_3				
L_4-N_4				
L_5-N_5				
L_6-N_6				
L_7-N_7				
L_8-N_8				
L_9-N_9				
$L_{10}-N_{10}$				
$L_{11}-N_{11}$				
$L_{12}-N_{12}$				
$L_{13}-N_{13}$				
L_0-N_0				NIC
$L_{14}-N_{14}$	M=1620'K R=435K	36WF260	32-1"φ TO COL. 16-1"φ BM. WEB CONN. ∠S-8×8×⅝	

2

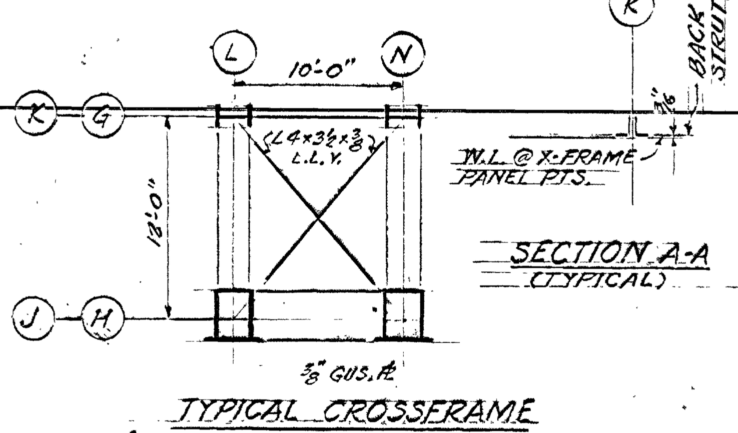

SECTION A-A (TYPICAL)

TYPICAL CROSSFRAME (FOR LOCATION SEE ELEVATION AT COL. LINES H & J)

COLUMN SCHEDULE

COL.	HL	HN	GL	GN	JL	JN	KL	KN
TOP OF COL.	EL.717.27'		EL.720.17'		EL.717.27'		EL.720.17'	

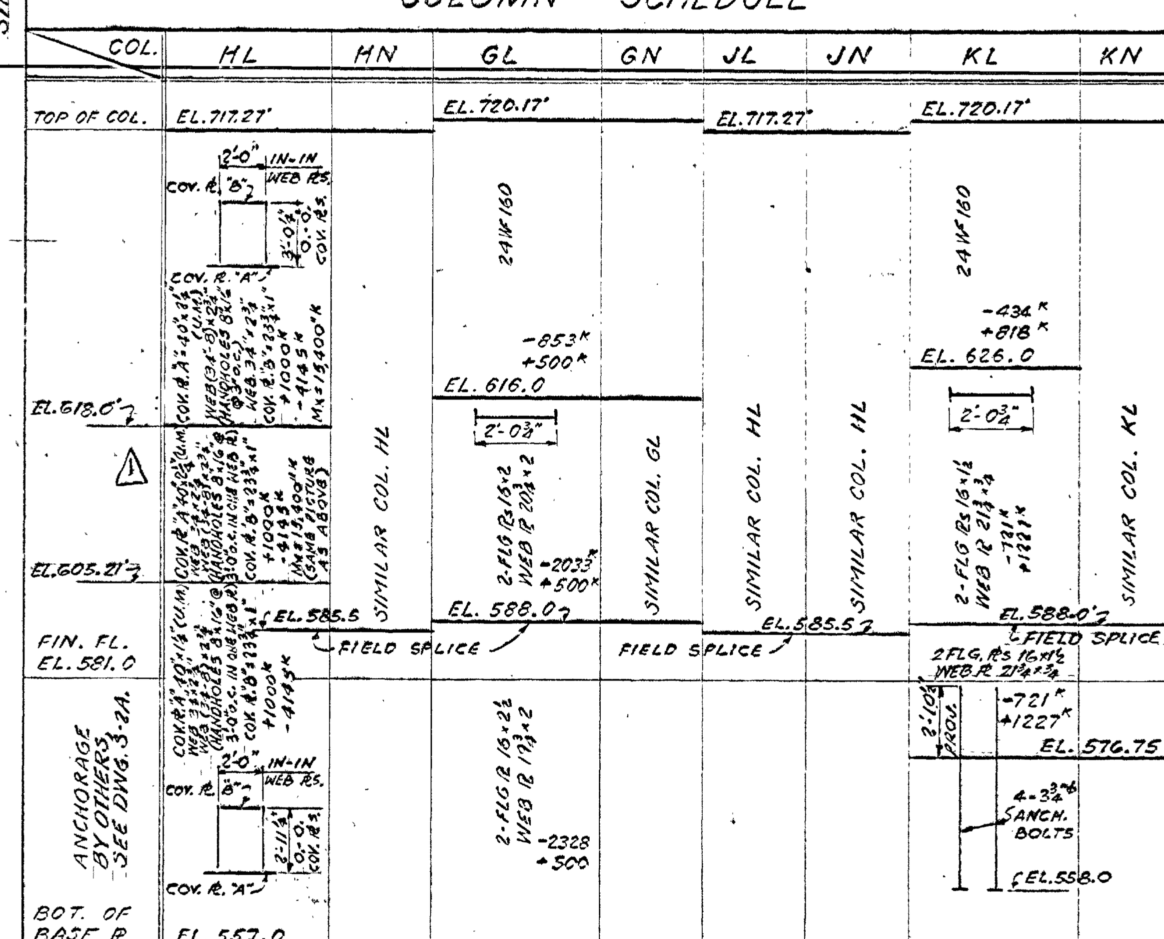

COVER PL A — SOUTH FACE FOR COL. HL & HN; NORTH " " " JL & JN
COVER PL B — NORTH " " " HL & HN; SOUTH " " " JL & JN

+ COMPRESSION IN KIPS
– UPLIFT IN KIPS

NOTE: ALL MATERIAL BELOW FIELD SPLICE & ANCH. BOLTS BY SUBSTRUCTURE CONTRACTOR. (SEE REF. DWG. S-2A FOR DETAILS.)

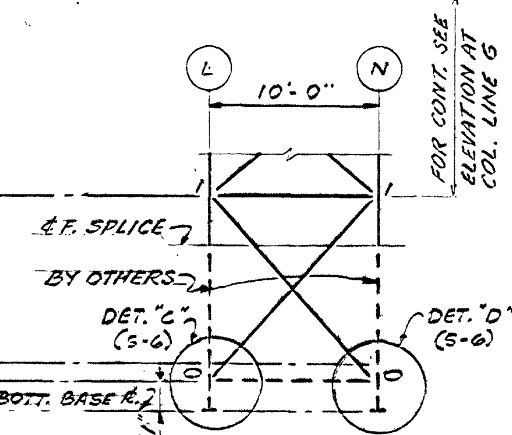

ELEVATION AT COL. LINE K

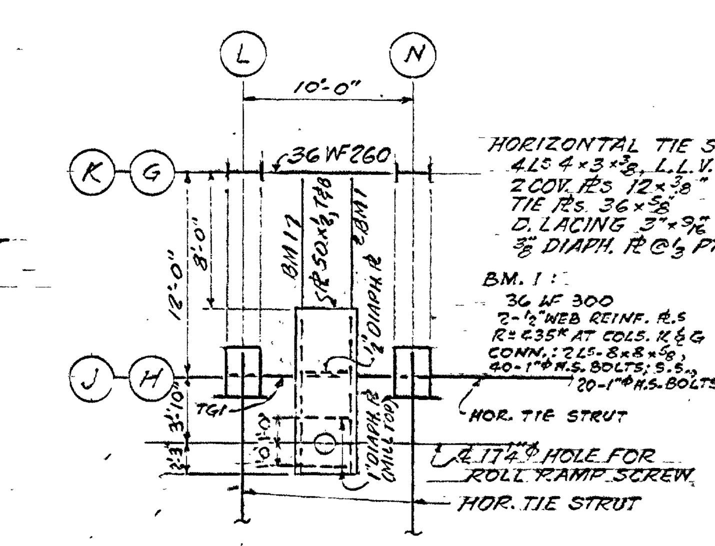

PLAN AT TOWER TOP

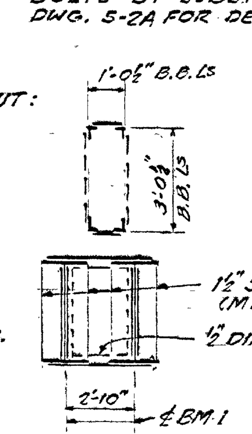

SECTION ALONG COL. LINE J & H

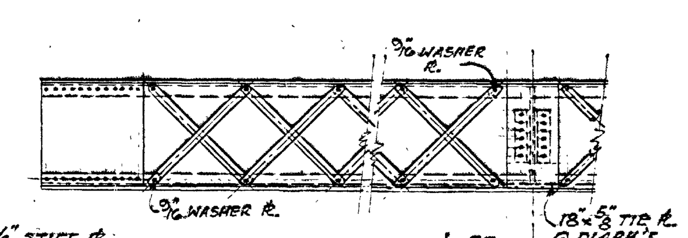

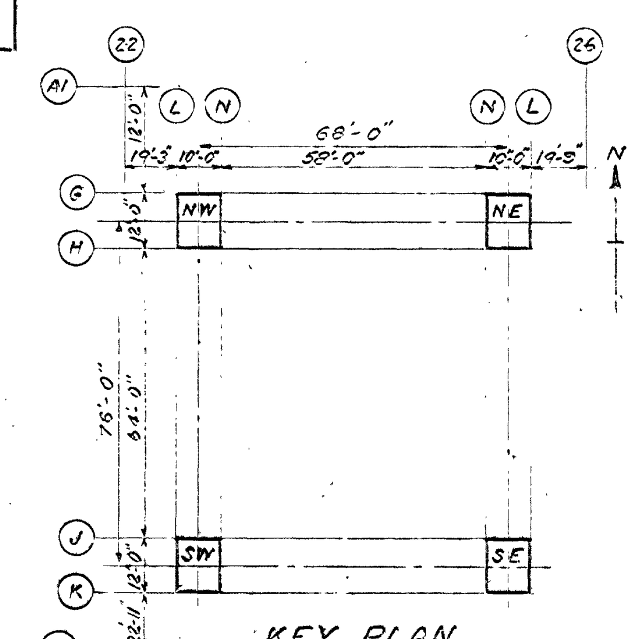

KEY PLAN

APPROVED FOR SAFETY OCT 20 1962

General Notes for Test Tower Structure and Loading Platform

1. All material and workmanship shall comply with ~~Contract~~ Specifications.
2. Design and fabrication shall be in accordance with the A.I.S.C. Spec. for the Design, Fabrication & Erection of Structural Steel adopted November 30, 1961, A.W.S. Standard Specifications for Welded Highway and Railway Bridges (D2.0-56), Specification for Structural Joints Using ASTM A 325 Bolts and the Supplementary Provisions of Project.
3. All structural steel shall conform to ASTM A 36 unless otherwise noted.
4. All bolted connections shall conform to ASTM A 325 high strength friction type bolts unless otherwise noted.
5. All bolted or riveted connections shall have a minimum of 3-7/8" diameter high strength bolts or rivets unless otherwise noted.
6. All welded connections shall be full penetration butt weld unless otherwise noted. ~~Full penetration butt weld shall be inspected as per Specifications.~~
7. All fillet welds shall be a minimum of 1/4" unless otherwise detailed.
8. All welding shall be done by shielded arc process.
9. Provide stitch rivets and ring fills between double angle members @ 2'-0" o.c. for compression members and 3'-0" o.c. for tension members.
10. All rivets shall conform to ASTM A 141.
11. ~~Sheared PLs may be substituted for U.M. PLs if all edges and corners are ground smooth.~~
12. All welds marked "insp." and butt welds shall be inspected as per Specifications.

Notes for Towers

1. All connections shall have 7/8" diameter high strength bolts or rivets unless otherwise noted.
2. Tower column splices shall be assembled complete with high strength bolts only or full penetration butt welds.
3. Faying surface of tower columns to crosshead connection plate shall be milled to ASA 250 and surface shall be protected as per specifications.
4. Contractor shall verify dimensions and location of embedded anchorages before proceeding with fabrication. Any corrections to be made for misfits shall be approved by contracting officer.
5. FOR CAMBER OF TOWER SEE SECT. 3 OF SPECIFICATIONS.

AS BUILT

REV.	BY	DATE		C.I. NO.	APPROVED
2	W.O.S.	5-28-63	TOWER BRACING SCHEDULE REVISED	5560-4	
1	W.O.S.	12-27-62	REVISED COV. PL "A" IN COL. SCHED.	-	

NATIONAL AERONAUTICS AND SPACE ADMINISTRATION — MSFC, HUNTSVILLE, ALABAMA

VITRO ENGINEERING COMPANY — A DIVISION OF VITRO CORPORATION OF AMERICA — NEW YORK

ADDITION TO BUILDING 4619- LOAD TEST ANNEX
TEST TOWER - TOWER STRESS SHEET
& ELEVATIONS

NASA AE CONT. NO. NASA 8-2145 — FILE NO. MSFC 7400

SUBMITTED: CHIEF ~~DES. ENGR.~~ — AE DATE: SEPT. 14, 1962
APPROVAL RECOMMENDED: — LAB DATE: 10-22-62
APPROVED: CHIEF, ENGINEERING BRANCH — NASA DATE: 10-25-62
DESIGNED T.T. & S.Y.C. — DRAWN M.V. RUSSO — CHECKED S.Y.C.
APPROVAL RECOMMENDED: CHIEF, Structural ~~DESIGN~~ SECTION — DESIGN DATE: 10-22-62
SCALE: ⅛"=1'-0" UNLESS NOTED — SPEC. NO. FE-D-303
DRWG. NO. FE-C-4619-S-5

MSFC MASTER BID DISK 11-18-2013

MSFC-FORM 232 (REV. DEC. 1960)

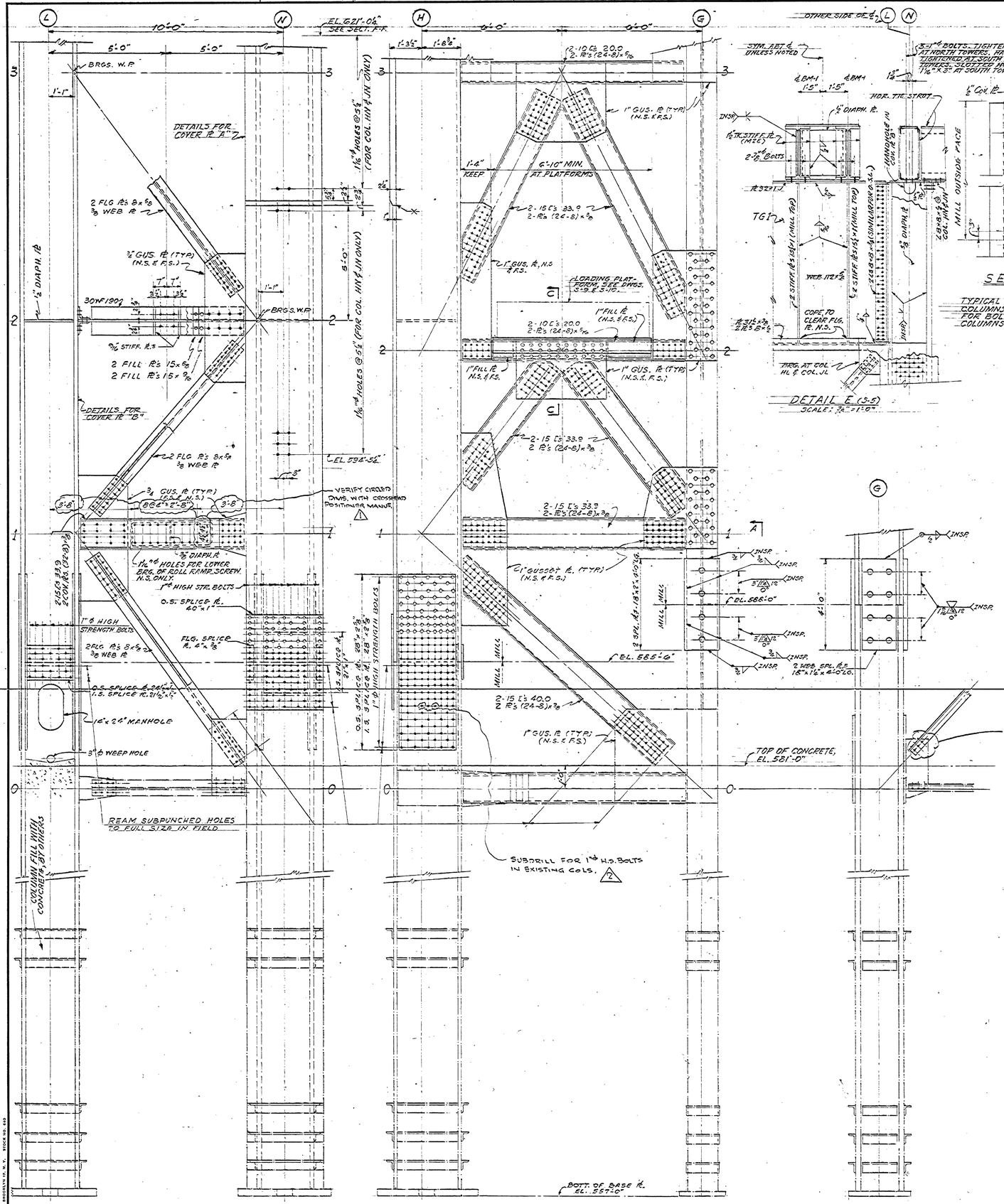

AS BUILT

NOTES:
1. FOR GENERAL NOTES SEE DWG. S-5.
2. WORK COMPLETED BY OTHERS ARE DENOTED THUS
3. WORK THIS DWG. WITH DWG. S-2A FOR MATCHING TO EMBEDDED WORK COMPLETED BY OTHERS.
4. SHOP COLUMN SPLICES SHALL BE FULL PENETRATION BUTT WELDS. SURFACE OF WELDS IN COVER PL "A" SHALL BE GROUND SMOOTH. COLUMN FIELD SPLICE OTHER THAN THAT SHOWN SHALL BE SUBMITTED TO CONTRACTING OFFICER FOR APPROVAL.
5. ALL HOLES IN EMBEDDED ANCHORAGES ARE SUBDRILLED BY OTHERS. CONTRACTOR SHALL REAM HOLES TO SIZE AFTER ERECTING MATING STEEL.

REV.	BY	DATE		
2	W.O.S.	5-28-63	ADDED NOTE - DETAIL "A"	K560-4
1	W.O.S.	1-29-63	NOTE ADDED IN DET. B	C.T. 55601

NATIONAL AERONAUTICS AND SPACE ADMINISTRATION — M S F C — HUNTSVILLE, ALABAMA

VITRO ENGINEERING COMPANY A DIVISION OF VITRO CORPORATION OF AMERICA NEW YORK

ADDITION TO BUILDING 4619 - LOAD TEST ANNEX
TEST TOWER - MISCELLANEOUS SECTIONS & DETAILS

NASA AE CONT. NO. NASA B-2145 — FILE NO. M S F C 7401

SUBMITTED: CHIEF DES. DIV'S.	APPROVAL RECOMMENDED:	APPROVED: CHIEF, ENGINEERING BRANCH	
A/E DATE: SEPT. 14, 1962	LAB DATE: 10-22-62	NASA DATE: 10-25-62	
DESIGNED S.Y.C. E.T.T. DRAWN M.V. RUSSO CHECKED S.Y.C.	APPROVAL RECOMMENDED: CHIEF, DESIGN SECTION	DESIGN DATE: 10-22-62	DRWG. NO. FE-C-4619-S-6
SCALE: 1/8"=1'-0" UNLESS NOTED		SPEC. NO. FE-C-303	

APPROVED FOR SAFETY — DATE — SAFETY OFFICE

MSFC-MASTER-BID-DISK-11-18-2013

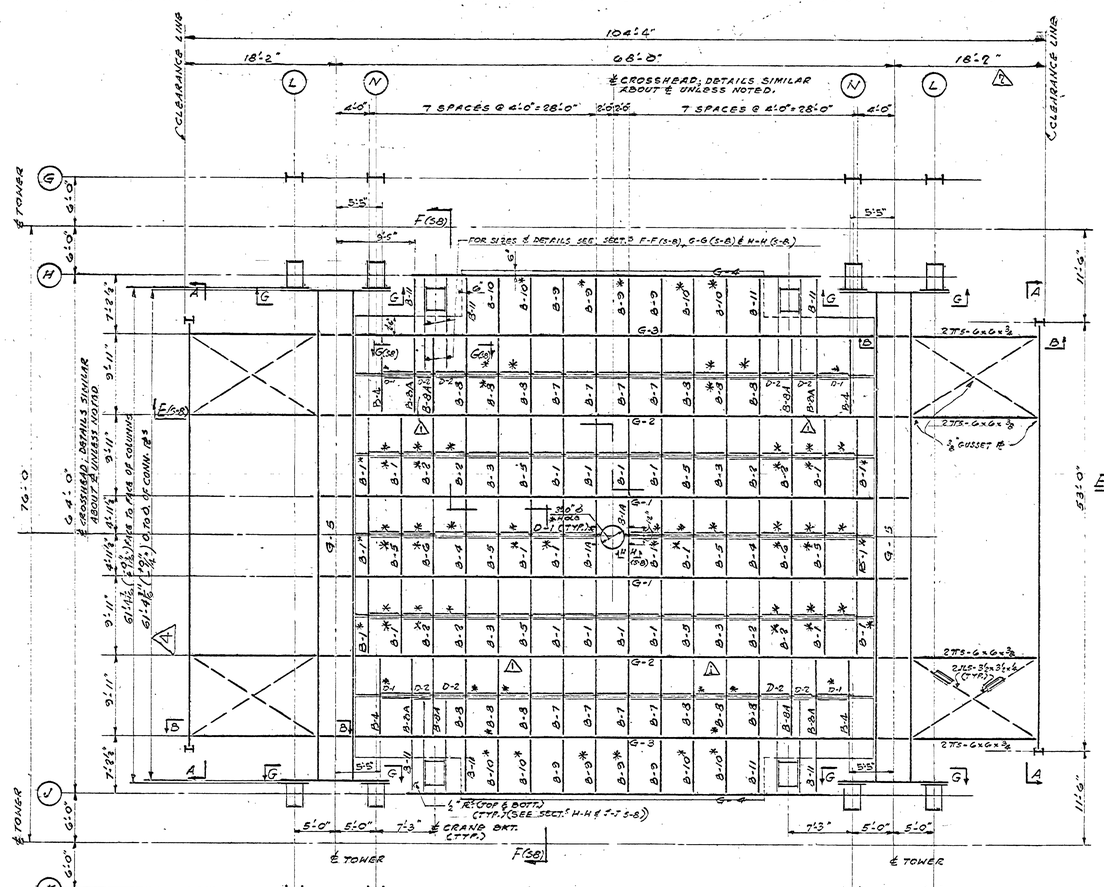

CROSSHEAD FRAMING PLAN

BEAM SCHEDULE											
BM. NO.	B-1 / B-1A	B-2	B-3	B-4	B-5	B-6	B-7	B-8 / B-8A	B-9	B-10	B-11
WEB PL.	96"x½"	96"x⅜"	96"x1"	96"x⅝"	96"x⅜"	96"x⅜"	96"x1"	96"x⅞"	96"x1"	96"x⅞"	97"x⅝"
TOP FLG.	9"x½"	9"x½"	9"x½"	9"x½"	9"x½"	9"x½"	12"x1½"	12"x1"	12"x1½"	12"x1"	9"x½"
BOTT. FLG.	—	—	—	2"x1½"	2"x1½"	3"x1¾"	7"x2½"	5½"x2½"	7"x2½"	5½"x2½"	2"x1½"
MAX. DESIGN B. MOMENT (K-FT.)	1,337	1,580	2,870	1,835	2,471	2,798	4,340	3,423	4,340	3,423	1,241
MAX. DESIGN SHEAR (K)	567	839	1,240	631	1,038	908	1,035	836	1,096	967	694

GIRDER SCHEDULE							
GIRDER		G-1	G-2	G-3	G-4	G-5	
WEB PL.	A	240"x1½"	240"x1⅜"	240"x2½"	98"x½"	2-240"x2½"	
	B	240"x1⅝"x26'-0"	240"x1⅞"x18'-0"	240"x1⅞"x18'-0"		2-240"x1⅜"x25'-9"	
TOP FLG. PL.	C	36"x2¾"x62'-0"	48"x4"x38'-0"	62"x4"x32'-0"	6"x½"	66"x4"x33'-9"	
	D	36"x1½"	38"x3"	48"x3"		58"x4"	
BOTT. FLG. PL.		118"x4"	118"x4"	4" THICK - (WIDTH VARIES)	—	C 66"x4"x33'-9"	
						D 62"x4"	
SHAPE						58¾" C. TO C. WEBS	
MAX. DESIGN B. MOMENT (K-FT.)		64,580	100,430	128,770	470	142,840	
MAX. DESIGN SHEAR (K)		3,284	4,088	5,847	235	8,723	

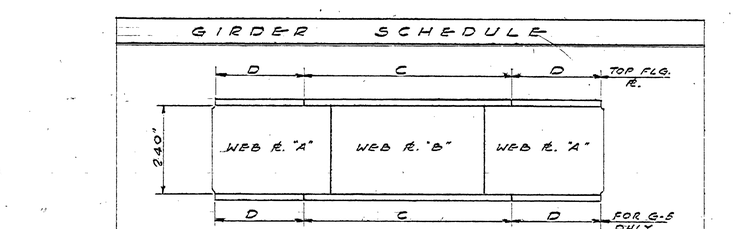

CONNECTIONS

1.) SHEAR CONNECTIONS

[FOR TYPICAL DETAIL SEE SECT'S E-E (SB) & F-F (SB)]

		B-1 / B-1A	B-2	B-3	B-4	B-5 / B-6	B-7 AT G-2	B-8A AT G-2 & G-3	B-8 AT G-4	B-9 AT G-4	B-10 AT G-4	B-11 AT G-4
MINIMUM NUMBER OF BOLTS 1"Ø (A 325)	OUTSTANDING LEGS	52	76	112	56	92	92	76	54	30	30	
	WEB LEGS	26	38	56	28	46	46	38	27	17	17	
ANGLE THICKNESS		5/8" (TYP.)										

2.) MOMENT CONNECTIONS

[FOR TYPICAL DETAIL SEE SECT'S F-F (SB) & G-G (SB)]

	B-7 & B-9 AT G-3	B-8 & B-10 AT G-3	B-11 AT G-3
NUMBER OF 1"Ø (A-354) BOLTS PER LINE, O.S. LEGS & WEB LEGS	20	18	24
NUMBER OF LINES IN EACH ANGLE LEG, O.S. LEGS & WEB LEGS	2	2	1
ANGLE THICKNESS	5/8" (TYP.)		

NOTE: 1. MAXIMUM BOLT SPACING SHALL BE 6".
2. FOR CONNECTIONS BETWEEN G-1, G-2, G-3 & G-5 SEE SECT. E-E (SB)

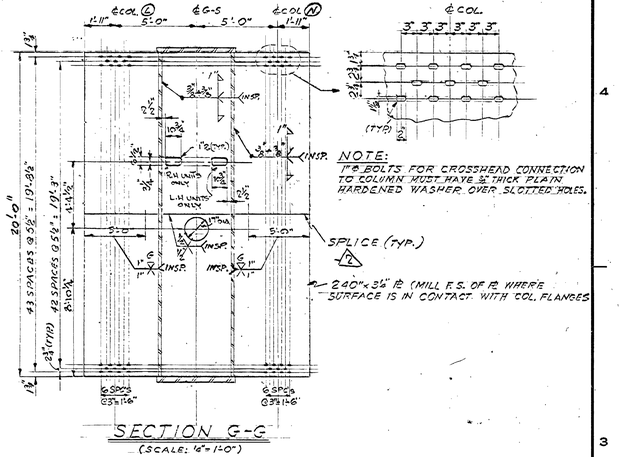

NOTE:
1"Ø BOLTS FOR CROSSHEAD CONNECTION TO COLUMN MUST HAVE ½" THICK PLATE HARDENED WASHER OVER SLOTTED HOLES.

SPLICE (TYP.)

240"x 3½" PL (MILL E.S. OF PL WHERE SURFACE IS IN CONTACT WITH COL. FLANGES

SECTION G-G
(SCALE: 1/8"=1'-0")

GRIND HOLES SMOOTH AFTER CUTTING

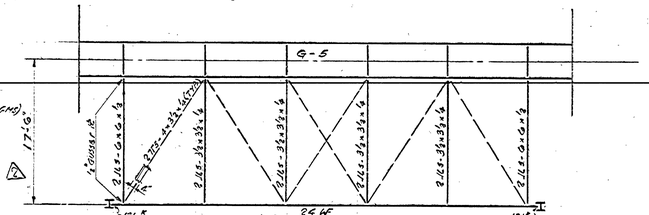

ALL GUSSET PL'S SHALL BE ⅜" THICK UNLESS NOTED OTHERWISE

SECTION D-D

NOTE: WHERE MEMBERS ARE SHOWN WITH NO STRESSES, CONNECTIONS SHALL DEVELOP FOR AT LEAST 50% OF CAPACITY OF MEMBER AT 22,000 PSI OF GROSS AREA.

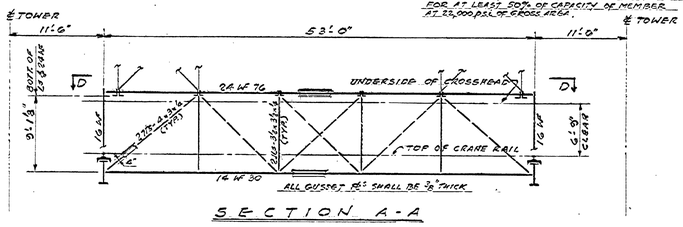

SECTION A-A

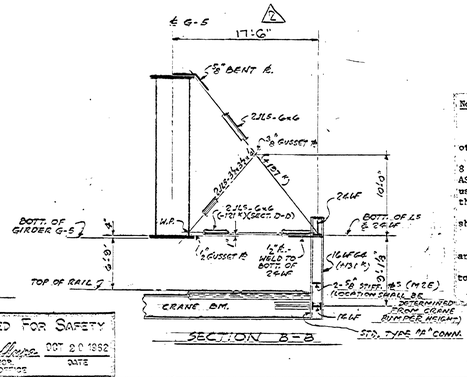

SECTION B-B

Notes for Crosshead

1. For general notes on Test Tower Structure see Drawing S-5.
2. All connections shall have 7/8" diameter high strength bolts unless otherwise noted.
3. All 1⅛" diameter bolts shall conform to ASTM A 354, Grade BD, 8 threads per inch and shall have heavy pattern nuts conforming to ASTM A 194, Grade 2H. Plain hardened washers under head and nut shall be used. Bolt shall be tightened with impact wrench to a snug, tight fit, then plus ½ turn.
4. Paying surface of end connection plate for Girder G-5 to tower column shall be milled and surface shall be protected as per specifications.
5. Connection of Crosshead to Tower:
   a) Minimum of 36-1" diameter high strength bolts per tower column are required to support dead load of crosshead.
   b) 305-1" diameter high strength bolts per tower column are required to support 30,000 k upward load.
6. ALL STD. CONNECTIONS REFER TO A.I.S.C. STANDARDS
7. LONGITUDINAL WEB SPLICES SHALL BE PERMITTED FOR GIRDERS G-1, G-2, & G-3 ONLY. UNLESS SHOWN AS FULL PENETRATION WELDING.

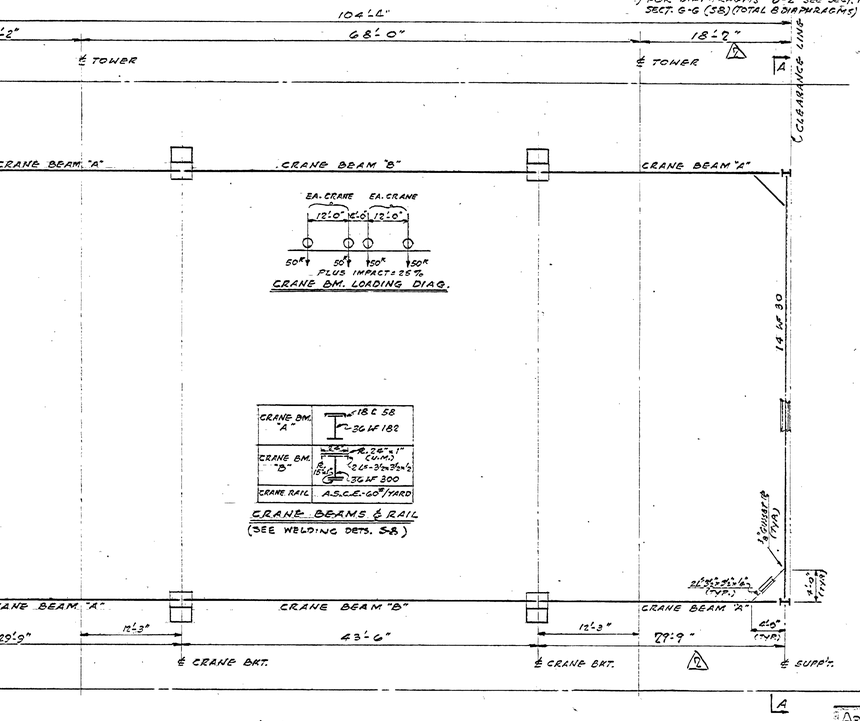

PLAN AT CRANE BEAMS

APPROVED FOR SAFETY
Lillard Hope OCT 20 1962
CHIEF, SAFETY OFFICE — DATE

REV.	BY	DATE		C.I. NO.	APPROVED
5	W.O.S.	7-23-64	DIMS. REVISED IN FRAMING PLAN, NOTE: NO. 8 DELETED	5560-30	
4	W.O.S.	4-6-64	ADDED HOLES IN G-5 GIRDER END PLATES	5560-23	
3	W.O.S.	1-31-63	DIMS. CHANGED, G-5 FLG. PL SIZE REVISED	5560-1	
2	W.O.S.	12-11-62	ADDITIONS ADDED IN CROSSHEAD FRAMING PLAN; ASTERISK DELETED ON B-8A	AMEND. #1	
1	W.O.S.	10-22-62	ORIGINAL		

NATIONAL AERONAUTICS AND SPACE ADMINISTRATION — M S F C — HUNTSVILLE, ALABAMA

VITRO ENGINEERING COMPANY A DIVISION OF VITRO CORPORATION OF AMERICA NEW YORK

ADDITION TO BUILDING 4619-LOAD TEST ANNEX
TEST TOWER-CROSSHEAD FRAMING PLAN AND SCHEDULE

NASA AE CONT. NO. NASA 8-2145 — FILE NO. MSFC 7402

SUBMITTED:		APPROVAL RECOMMENDED:	APPROVED:
CHIEF, DES. ENGR.		CHIEF, ENGINEERING BRANCH	CHIEF, ENGINEERING BRANCH
A/E: DATE:	SEPT. 10, 1962	LAR: DATE:	NASA: DATE:
DESIGNED	N.C.	APPROVED RECOMMENDED:	DRWG. NO.
DRAWN	M.V. RUSSO	CHIEF, DESIGN SECTION	FE-C-4619-S-7
CHECKED	S.Y.C.	DESIGN DATE:	
SCALE:	1/8" = 1'-0" UNLESS NOTED	SPEC. NO.	FE-D-303

AS BUILT

MSFC MASTER BID DISK 11-18-2013

OSCILUX PRESS, INC., BROOKLYN 17, N.Y. STOCK NO. 640

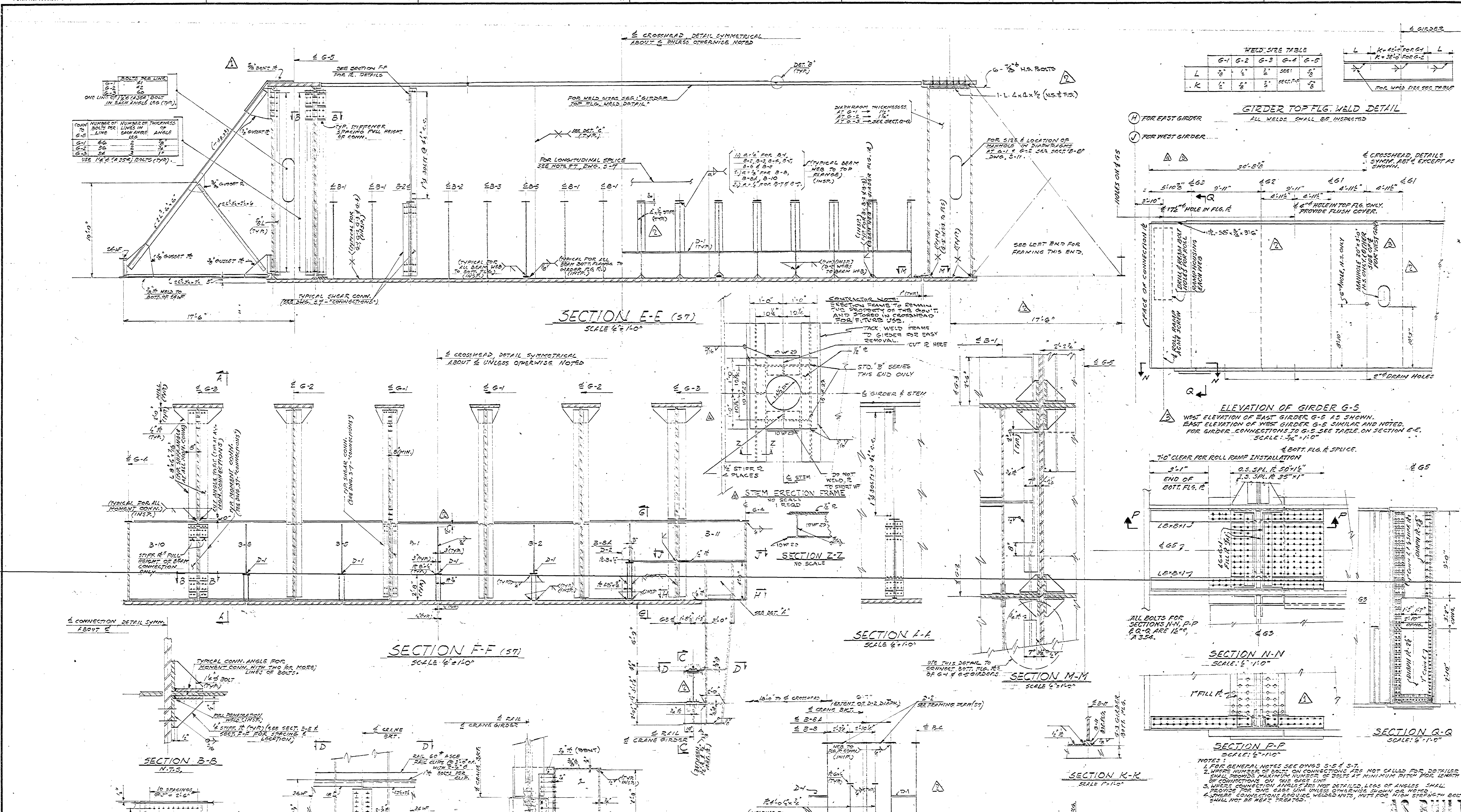

NOTES:

1. FOR GENERAL NOTES SEE DWGS S-5 & S-7.
2. WHERE NUMBER OF BOLTS ON CONNECTIONS ARE NOT CALLED FOR, DETAILER SHALL PROVIDE MAXIMUM NUMBER OF BOLTS AT MINIMUM PITCH FOR LENGTH OF CONNECTIONS ON ONE GAGE LINE.
3. WHERE CONNECTION ANGLES ARE NOT DETAILED, LEGS OF ANGLES SHALL PROVIDE FOR ONE GAGE LINE UNLESS OTHERWISE SHOWN OR NOTED.
4. WHERE CONNECTIONS REQUIRE WELDED NUTS, NUTS FOR HIGH STRENGTH BOLTS SHALL NOT BE HEAT TREATED.

AS BUILT

REV.	BY	DATE		C. I. NO.	APPROVED	
5	JLB	2-25-64	DELETED REV 4 AND ADDED STEM ERECTION FRAME.	5560-20		
4	JLB	1-31-64	ADDED REINF TO 3/4" PL ON TOP FLANGE OF G-5 GIRDER.	5560-19		
3	W.O.S.	5-28-63	REVISED NOTE IN ELEVATION OF G-5 GIRDER	5560-11		
2	W.O.S.	1-31-63	DIMS CHANGED, STIFF PLS ADDED, PL DELETED CRANE RAIL BRACKET, PL DELETED @ MANHOLE, ETC	C.I. 5560-1		
1	W.O.S.	12-17-62	REVISED 3/8" BENT PL TO 1/2" - SECTION E-E EXTENDED CLIP LS - SECTION P-P, REVISED SECT B-B	Amends 1 & 3		

NATIONAL AERONAUTICS AND SPACE ADMINISTRATION — M S F C, HUNTSVILLE, ALABAMA

VITRO ENGINEERING COMPANY A DIVISION OF VITRO CORPORATION OF AMERICA NEW YORK

ADDITION TO BUILDING 4619 - LOAD TEST ANNEX
TEST TOWER - CROSSHEAD SECTIONS & DETAILS

NASA AE CONT. NO. NASA 8-2145

FILE NO. MSFC 7403

SUBMITTED: [signature] CHIEF DES. ENG'R.
AE. DATE: SEPT. 14, 1962
APPROVAL RECOMMENDED: [signature]
LAB. DATE: 10-22-62
APPROVED: [signature] CHIEF, ENGINEERING BRANCH
NASA DATE: 10-25-62

DESIGNED N.C.
DRAWN N.C.
CHECKED S.L.
SCALE: AS NOTED

APPROVAL RECOMMENDED: [signature] CHIEF, DESIGN SECTION
DESIGN DATE: 10-22-62
SPEC. NO. FE-D-303

DRWG. NO. FE-C-4619-S-8

MSFC MASTER BID DISK 11-18-2013

Notes:
1. For Notes see Dwgs. S-10 & S-12.
2. Mesh panels at Elevator Shaft shall be of Expanded Metal Mesh, 70/sq.ft., similar to or equal to United States Gypsum, Type Grate-X.
3. Safety chain shall be 3/16" x 1¼ links per foot, wt.=0.40/ft., material conforming to ASTM A 36-30.
4. Safety chain shall have snap fasteners on one end and connected to eye-bolt at other end.
5. All ladders shall be 2 - 2½"x 3/8" rails with 3/4" rungs at 1'-0" o.c. unless otherwise noted.

APPROVED FOR SAFETY OCT 20 1962

NATIONAL AERONAUTICS AND SPACE ADMINISTRATION
MSFC HUNTSVILLE, ALABAMA
VITRO ENGINEERING COMPANY A DIVISION OF VITRO CORPORATION OF AMERICA NEW YORK

ADDITION TO BUILDING 4619 - LOAD TEST ANNEX
CATWALKS, PLATFORM, STAIRS & ELEVATOR DET'S
SH. NO. 3

NASA AE CONT. NO. NASA 8-2145
FILE NO. MSFC 7404
DATE SEP. 14, 1962
SCALE 3/4"=1'-0" UNLESS NOTED
SPEC. NO. FE-D-303
DRWG. NO. FE-C-4619-S-9

MSFC MASTER BID DISK 11-18-2013

FORM No. 1000.807-O

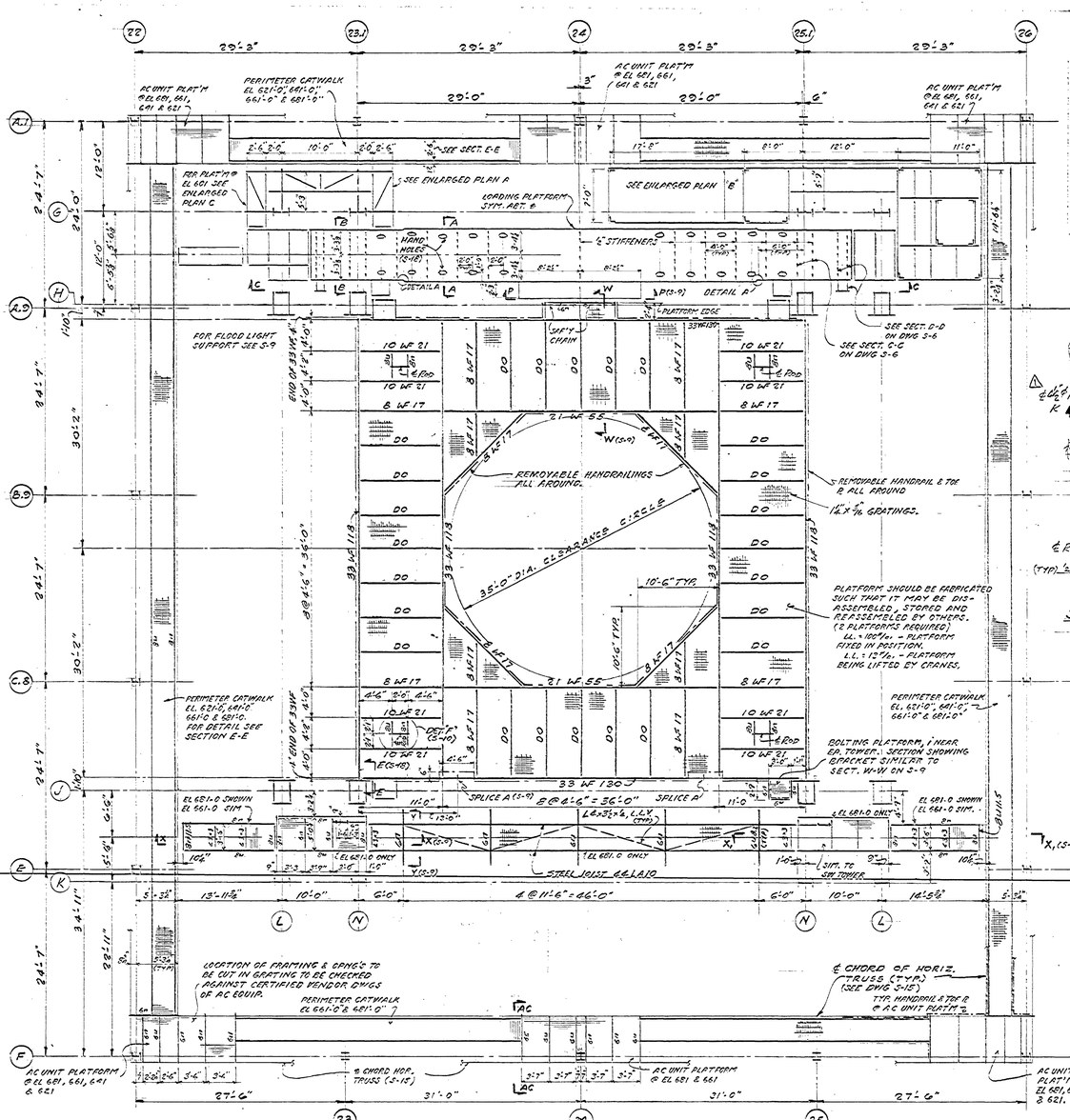

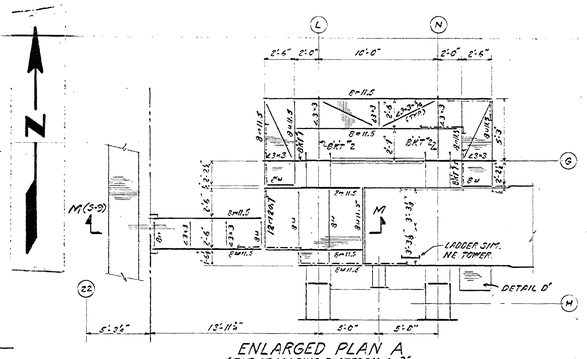

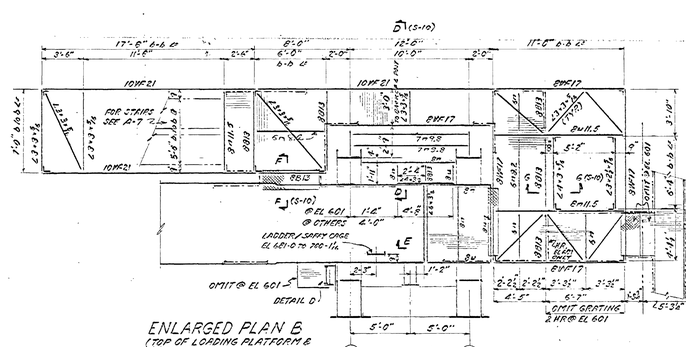

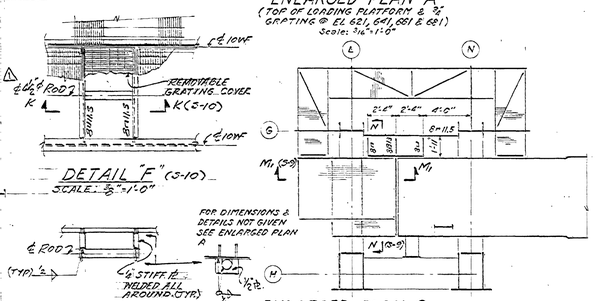

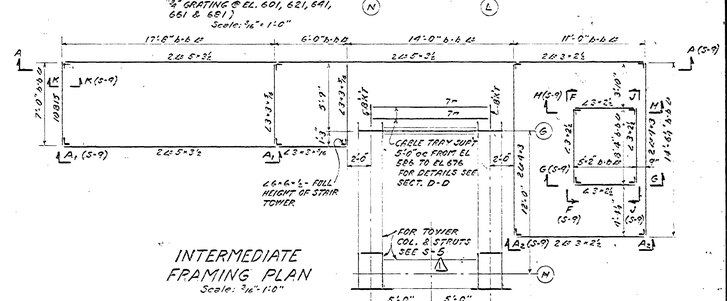

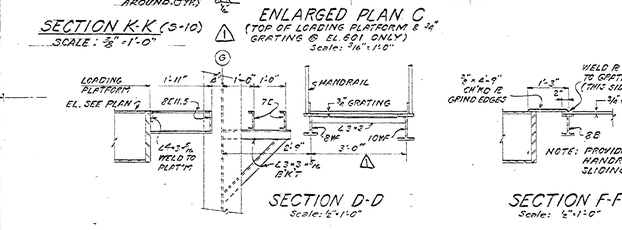

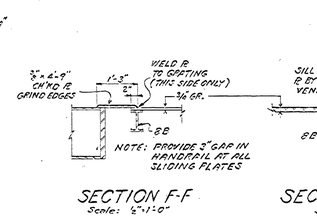

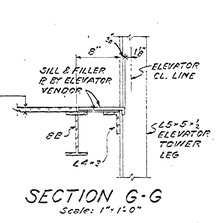

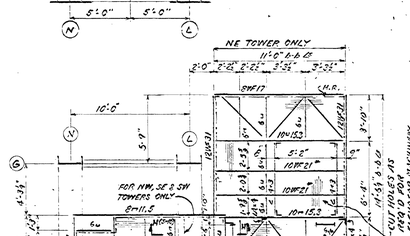

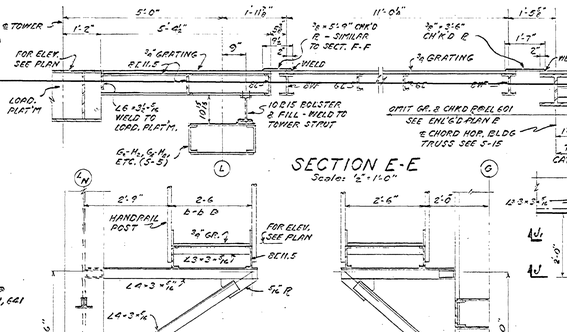

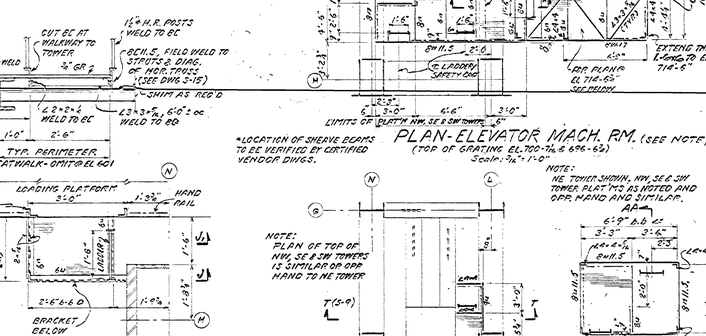

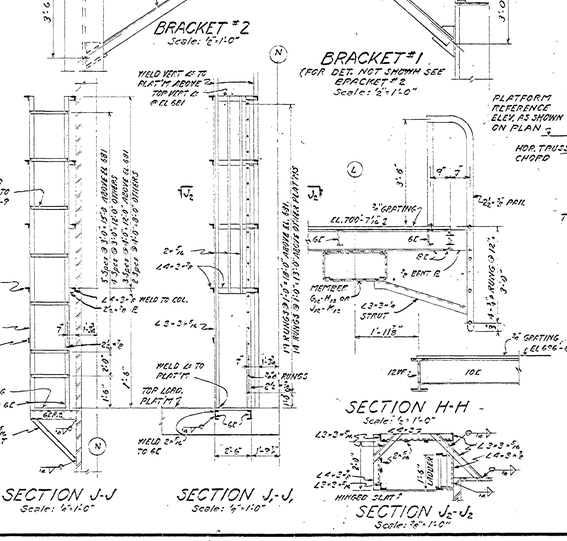

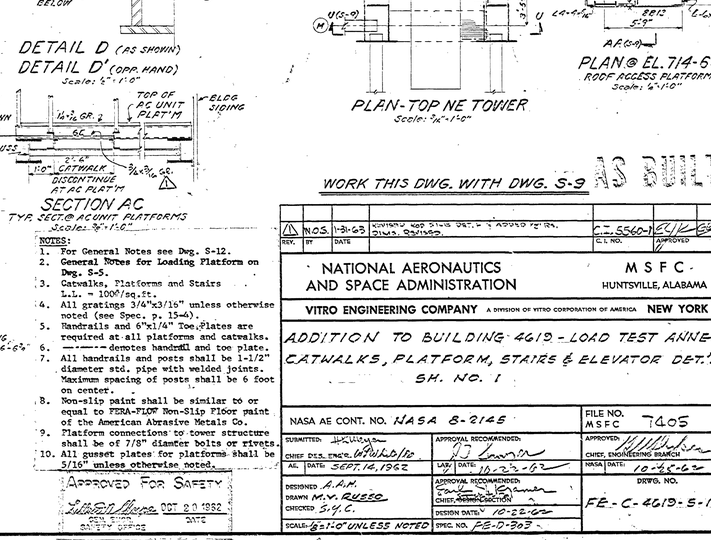

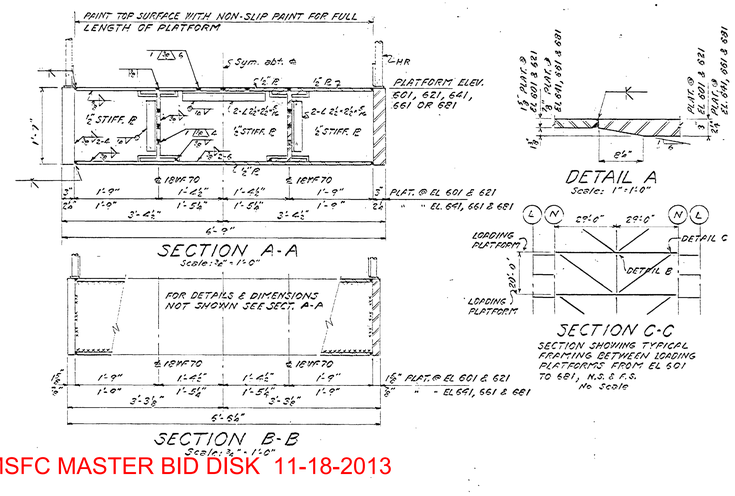

NOTES:
1. For General Notes see Dwg. S-12.
2. General Notes for Loading Platform on Dwg. S-5.
3. Catwalks, Platforms and Stairs L.L. = 100#/sq.ft.
4. All gratings 3/4"x3/16" unless otherwise noted (see Spec. p. 15-6).
5. Handrails and 6"x1/4" Toe Plates are required at all platforms and catwalks.
6. ——·——· denotes handrail and toe plate.
7. All handrails and posts shall be 1-1/2" diameter std. pipe with welded joints. Maximum spacing of posts shall be 6 foot on center.
8. Non-slip paint shall be similar to or equal to PERA-FLOW Non-Slip Floor paint of the American Abrasive Metals Co.
9. Platform connections to tower structure shall be of 7/8" diamter bolts or rivets.
10. All gusset plates for platforms shall be 5/16" unless otherwise noted.

APPROVED FOR SAFETY
OCT 20 1962
DATE

WORK THIS DWG. WITH DWG. S-9 AS BUILT

REV.	BY	DATE		C.L. NO.	APPROVED
1	NOS	1-31-63	REVISED ROD SIZES DET. & ADDED RE'INS.	C.L. 5560-1	

NATIONAL AERONAUTICS AND SPACE ADMINISTRATION — M S F C - HUNTSVILLE, ALABAMA

VITRO ENGINEERING COMPANY A DIVISION OF VITRO CORPORATION OF AMERICA NEW YORK

ADDITION TO BUILDING 4619 - LOAD TEST ANNEX
CATWALKS, PLATFORM, STAIRS & ELEVATOR DET.'S
SH. NO. 1

NASA AE CONT. NO. NASA 8-2145 — FILE NO. MSFC 7405

SUBMITTED: CHIEF DES. ENG'R. — APPROVAL RECOMMENDED: — APPROVED: CHIEF, ENGINEERING BRANCH
A/E DATE: SEPT. 14, 1962 — L&D DATE: 10-22-62 — NASA DATE: 10-25-62
DESIGNED A.A.M. DRAWN M.W. RUSSO CHECKED S.Y.C. — APPROVAL RECOMMENDED: CHIEF, ASTRIONICS SECTION — DESIGN DATE: 10-22-62 — DWG. NO. FE-C-4619-S-10
SCALE: ½"=1'-0" UNLESS NOTED — SPEC. NO. PE-D-303

MSFC MASTER BID DISK 11-18-2013

NOTES:
1. FOR GENERAL NOTES SEE DWGS S-5 & S-7.
2. WHERE NUMBER OF BOLTS ON CONNECTIONS ARE NOT CALLED FOR, DETAILER SHALL PROVIDE MAXIMUM NUMBER OF BOLTS AT MINIMUM PITCH FOR LENGTH OF CONNECTIONS ON ONE GAGE LINE.
3. WHERE CONNECTION ANGLES ARE NOT DETAILED, LEGS OF ANGLES SHALL PROVIDE FOR ONE GAGE LINE UNLESS OTHERWISE SHOWN OR NOTED.
4. WHERE CONNECTIONS REQUIRE WELDED NUTS, NUTS FOR HIGH STRENGTH BOLTS SHALL NOT BE HEAT TREATED.

REV.	BY	DATE		C. I. NO.	APPROVED	
5	JLB	2-25-64	DELETED REV 4 AND ADDED STEM ERECTION FRAME.	5560-20	GES	
4	JLB	1-31-64	ADDED REINF TO 3/4" PL ON TOP FLANGE OF G-5 GIRDER.	5560-19	GES	
3	W.O.S.	5-28-63	REVISED NOTE IN ELEVATION OF G-5 GIRDER	5560-4	EJK	GES
2	W.O.S.	1-31-63	DIMS. CHANGED, STIFF. PL ADDED, PL DELETED CRANE RAIL BRACKET, PL DELETED @ MANHOLE, ETC	C.I. 5560-1	EJK	GES
1	W.O.S.	12-17-62	REVISED 3/8" BENT PL. TO 5/8 - SECTION E-E EXTENDED CLIP LS - SECTION P-P, REVISED SECT. B-B	Amends # 1 & 3	EJK	GES

NATIONAL AERONAUTICS AND SPACE ADMINISTRATION — M S F C, HUNTSVILLE, ALABAMA

VITRO ENGINEERING COMPANY A DIVISION OF VITRO CORPORATION OF AMERICA NEW YORK

ADDITION TO BUILDING 4619 - LOAD TEST ANNEX
TEST TOWER - CROSSHEAD SECTIONS & DETAILS

NASA AE CONT. NO. NASA 8-2145 | FILE NO. MSFC 7403

SUBMITTED: [signature] CHIEF DES. ENG'R. | AE. DATE: SEPT. 14, 1962
APPROVAL RECOMMENDED: [signature] | LAB. DATE: 10-22-62
APPROVED: [signature] CHIEF, ENGINEERING BRANCH | NASA DATE: 10-25-62
DESIGNED N.C.
DRAWN N.C.
CHECKED S.L.
APPROVAL RECOMMENDED: [signature] CHIEF, DESIGN SECTION
DESIGN DATE: 10-22-62
SCALE: AS NOTED
SPEC. NO. FE-D-303
DRWG. NO. FE-C-4619-S-8

FORM No. 1000.807-0

PLATFORMS AT CROSSHEAD

SCALE: 1/8"=1'-0"

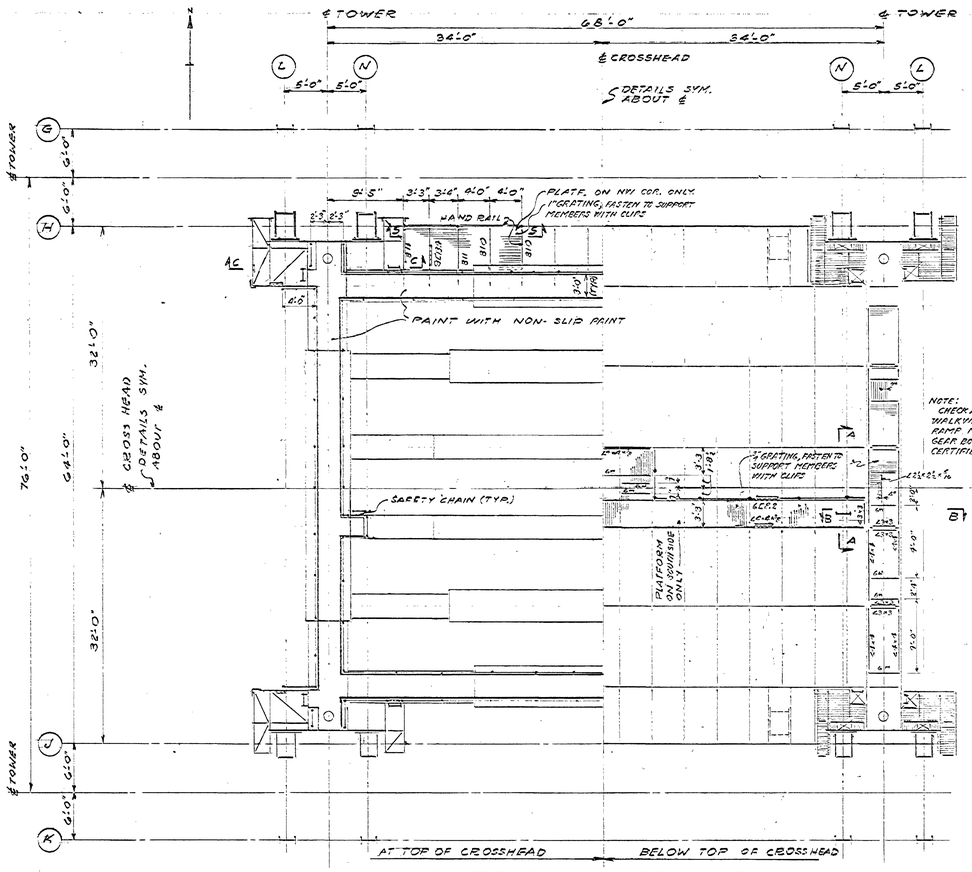

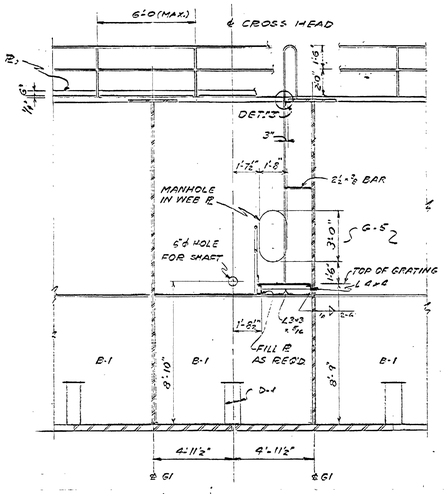

SECTION A-A

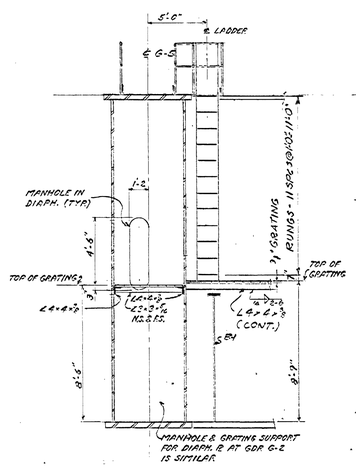

SECTION B-B

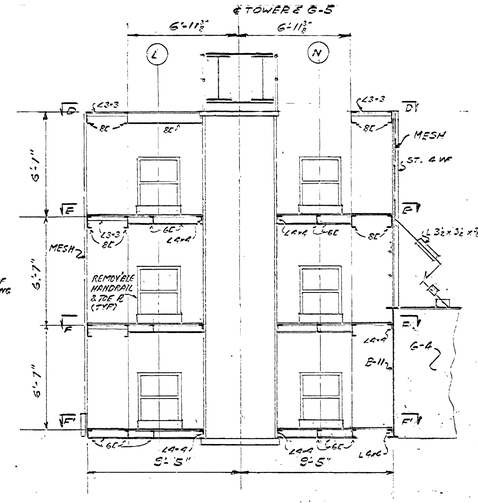

SECTION C-C

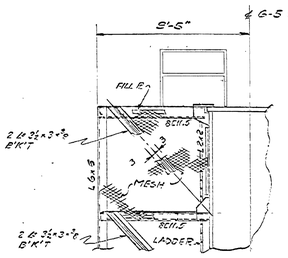

SECTION Q-Q

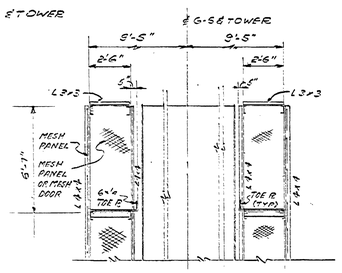

SECTION R-R

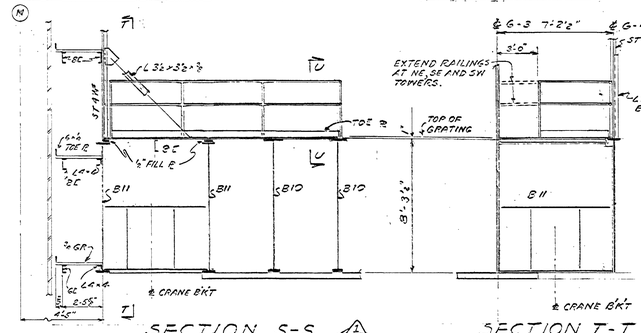

SECTION S-S

SECTION T-T

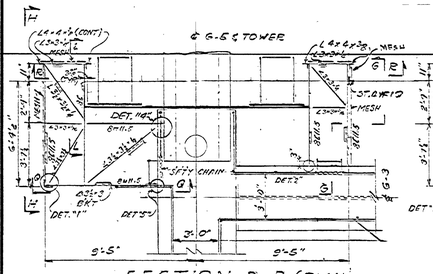

SECTION D-D (PLAN)

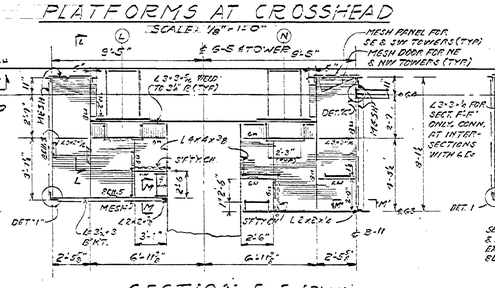

SECTION E-E (PLAN)

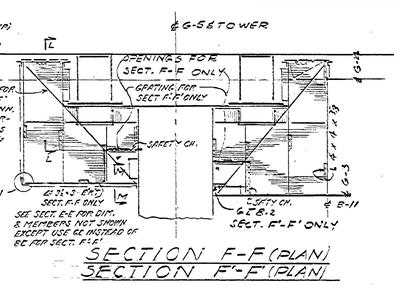

SECTION F-F (PLAN)

SECTION F'-F' (PLAN)

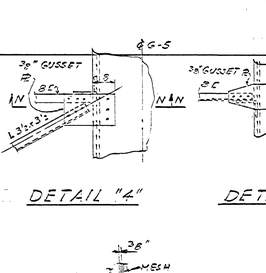

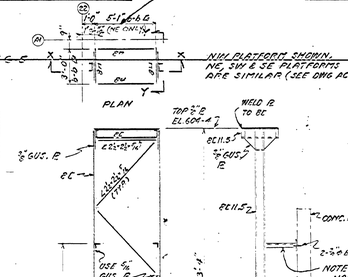

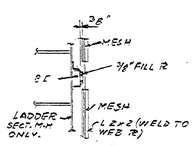

SECTION M-M'

SECTION M'-M'OPP.HAND

SCALE: 1"=1'-0"

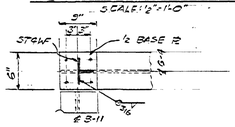

DETAIL "6"

NO SCALE

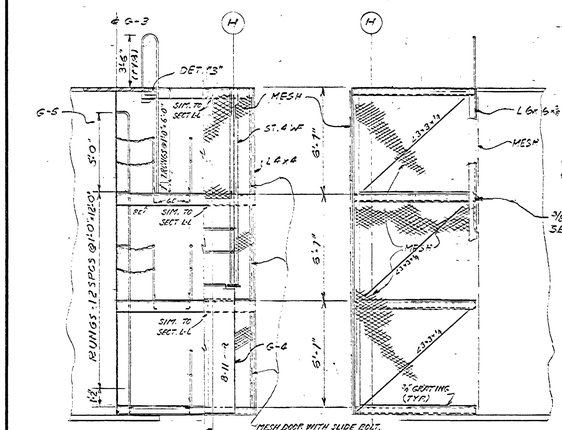

SECTION G-G

SECTION H-H

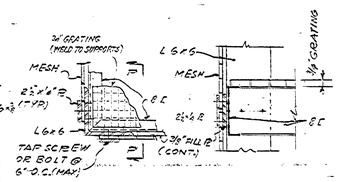

PLAN

SECTION P-P

DETAIL "1"

NO SCALE

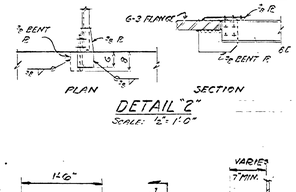

DETAIL "2"

SCALE: 1½" 1'-0"

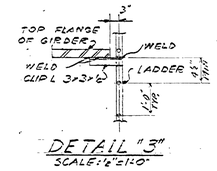

DETAIL "3"

SCALE: 1½" 1'-0"

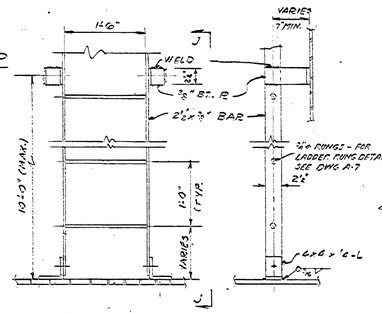

ELEVATION

SECTION J-J

TYPICAL LADDER DETAIL

NO SCALE

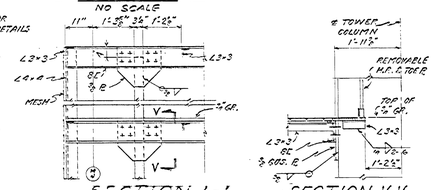

SECTION L-L

SCALE: ½" 1'-0"

SECTION V-V

SCALE: ½" 1'-0"

NOTES:
1. FOR GENERAL NOTES SEE DWG. S-12.
2. FOR ADDITIONAL NOTES SEE DWGS. S-9 & S-10.
3. BOLTING PLATFORMS AT NE, SE & SW TOWERS ARE SIMILAR TO PLATFORMS AT NW TOWER UNLESS OTHERWISE NOTED.

AS BUILT

REV.	BY	DATE	DESCRIPTION	C. I. NO.	APPROVED
⚠	SG	5-2845	AS-BUILT		

NATIONAL AERONAUTICS AND SPACE ADMINISTRATION — M S F C — HUNTSVILLE, ALABAMA

VITRO ENGINEERING COMPANY A DIVISION OF VITRO CORPORATION OF AMERICA — NEW YORK

ADDITION TO BUILDING 4619 - LOAD TEST ANNEX CATWALKS, PLATFORM, STAIRS & ELEVATOR DET.'S SH. NO. 2

NASA AE CONT. NO. NASA 8-2145 — FILE NO. M S F C 7406

SUBMITTED: H. J. Wolfe — APPROVAL RECOMMENDED: — APPROVED:

CHIEF DES. ENGR.: — CHIEF, ENGINEERING BRANCH

A.E. DATE: SEPT. 18, 1962 — LAB DATE: 10-23-62 — NASA DATE: 10-25-62

DESIGNED M.L.M. DRAWN M.L.H. CHECKED S.F.C. — APPROVAL RECOMMENDED: — CHIEF, DESIGN SECTION — DESIGN DATE: 10-22-62 — DRWG. NO. FE-C-4619-S-11

SCALE: 1/2"=1'-0" UNLESS NOTED — SPEC. NO. PE-D-303

Approved For Safety — Robert Moore — OCT 20 1962 — CHIEF, SAFETY OFFICE — DATE

MSFC MASTER BID DISK 11-18-2013

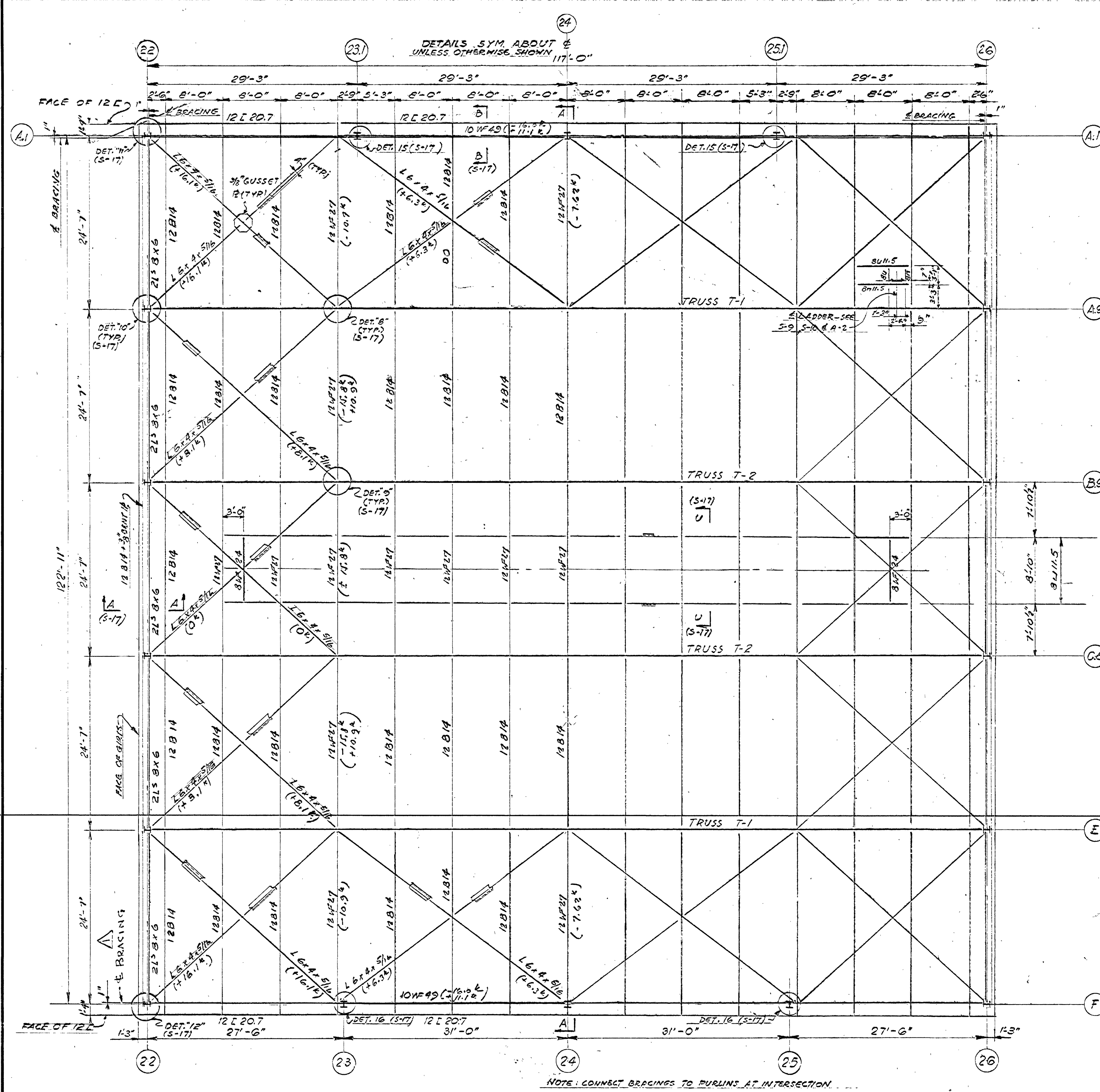

TOP CHORD PLAN
SCALE 1/8" = 1'-0"

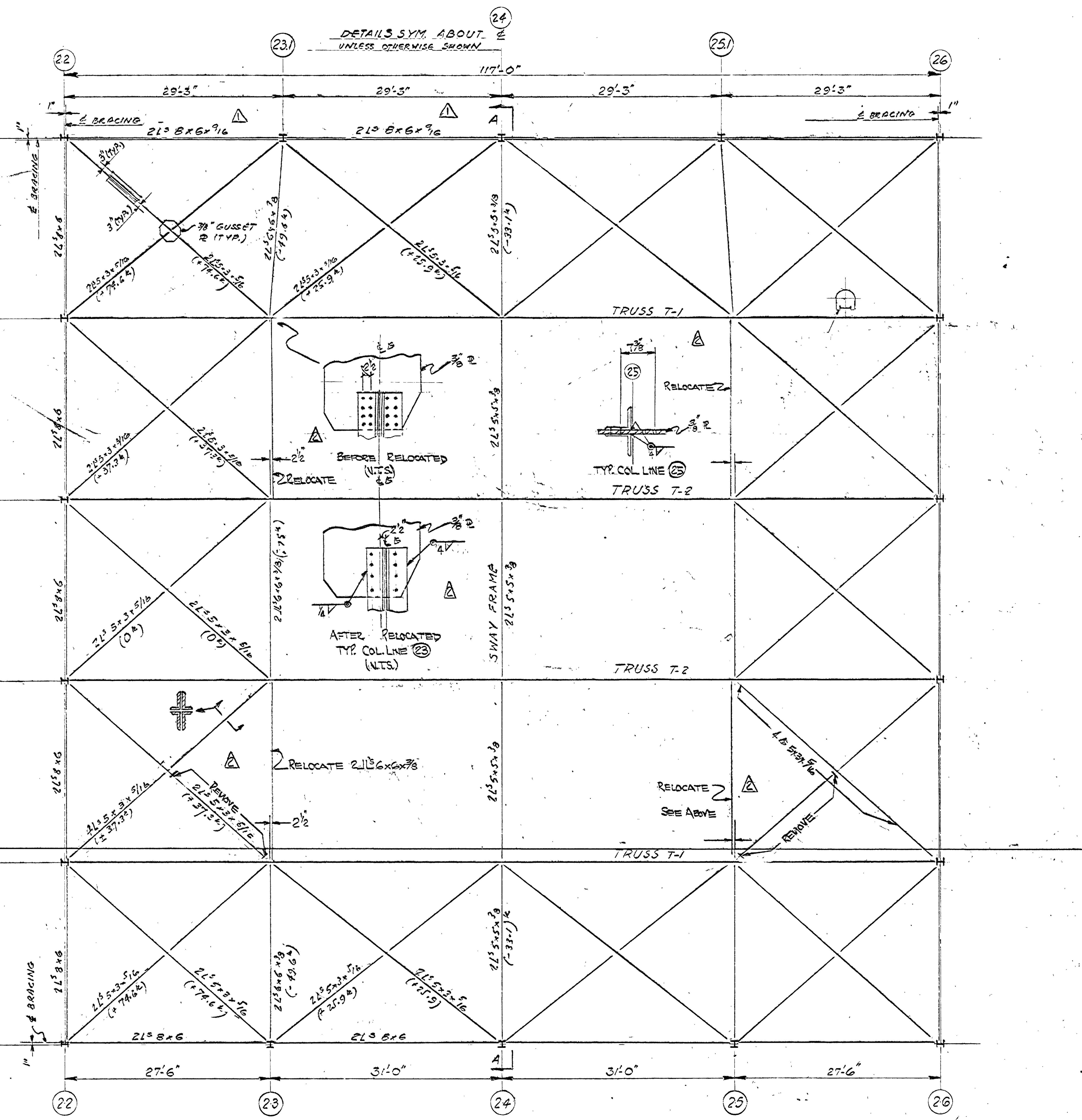

BOTTOM CHORD PLAN
SCALE 1/8" = 1'-0"

NOTES:
1. (+) STRESS DUE TO WIND LOAD.
2. - = COMPRESSION
+ = TENSION
3. BRACING CONNECTIONS SHALL DEVELOP MINIMUM 50% OF GROSS AREA OF MEMBER, F_t = 22,000 PSI.

NOTE 14 - THE DIMENSIONS 2½" AND 7⅜" WERE TAKEN FROM SHOP DWGS. AND ARE GIVEN SO THAT EXISTING HOLES CAN BE UTILIZED WHEN BRACING IS RELOCATED.

AS BUILT

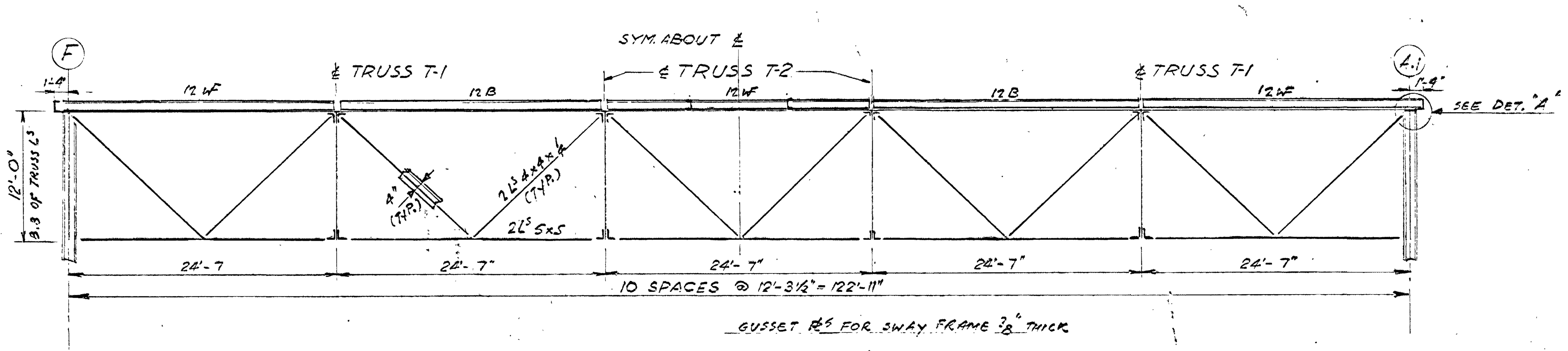

SECTION A-A (SWAY FRAME)
SCALE: 1/8" = 1'-0"

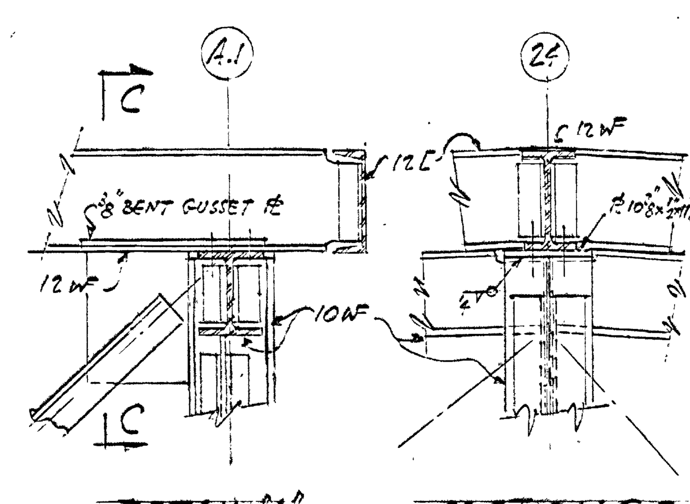

DETAIL "A"
SCALE ¾" = 1'-0"

SECTION C-C
SCALE ¾" = 1'-0"

General Notes

1. All material and workmanship shall comply with CONTRACT Specifications.
2. Design and fabrication shall be in accordance with the AISC SPECIFICATION for the Design, Fabrication & Erection of Structural Steel adopted November 30, 1961, A.W.S. Standard Code for Arc and Gas Welding in Building Construction (D1.0-46), Specification for Structural Joints Using ASTM A 325 Bolts and the Supplementary Provisions of the Project.
3. All structural steel shall conform to ASTM A 36 unless otherwise noted.
4. All rivets shall conform to ASTM A 141.
5. All connections shall be A.I.S.C. Standard Series "B" unless otherwise noted.
6. All bolted or riveted connections shall have a minimum of 3-3/4" diameter high strength bolts or rivets unless otherwise noted.
7. High strength bolts may be substituted for rivets.
8. Bolted connections shall conform to ASTM A 325 high strength friction type bolts unless otherwise noted.
9. Fillet weld shall be 1/4" unless otherwise detailed.
10. All welding shall be done by shielded arc process.
11. Provide stitch rivets and ring fills between double angle members @ 2'-0" o.c. for compression members and 3'-0" o.c. for tension members.
12. Contractor shall verify all dimensions including equipment connections and anchor bolts in field, from equipment manufacturers' certified drawings which have been approved by the Contracting Officer.
13. For Concrete notes, see Dwg. S-18.

APPROVED FOR SAFETY
OCT 20 1962
GEN. ENGR. SAFETY OFFICE — DATE

REV.	BY	DATE		C.I. NO.	APPROVED	
2	J.R.B.	6-16-64	REVISED BRACING TO ELIMINATE INTERFERENCE WITH "A"-FRAME & ADDED NOTE #14	5560-28	GES	
1	W.O.S.	12-17-62	REVISED L SIZE BOT. CHORD ADDED ℄ BRACING TOP CHORD	AMEND #1	EJK	GES

NATIONAL AERONAUTICS AND SPACE ADMINISTRATION — MSFC, HUNTSVILLE, ALABAMA

VITRO ENGINEERING COMPANY — A DIVISION OF VITRO CORPORATION OF AMERICA — NEW YORK

ADDITION TO BUILDING 4619 - LOAD TEST ANNEX BUILDING ANNEX - HIGH BAY - ROOF FRAMING PLANS & DETAILS

NASA AE CONT. NO. NASA 8-2145
FILE NO. MSFC 7407
SUBMITTED: CHIEF DES. ENG'R. 9-13-62; AE: DATE: SEPT. 14, 1962
APPROVAL RECOMMENDED: LAB. DATE: 10-22-62
APPROVED: CHIEF, ENGINEERING BRANCH; NASA DATE: 10-25-62
DESIGNED N.C.
DRAWN T.P. & N.C.
CHECKED S.G.C.
APPROVAL RECOMMENDED: CHIEF, DESIGN SECTION
DESIGN DATE: 10-22-62
SCALE: 1/8" = 1'-0"
SPEC. NO. FE-D-303
DRWG. NO. FE-C-4619-S-12

MSFC MASTER BID DISK 11-18-2013

FORM No. 1000.807-O

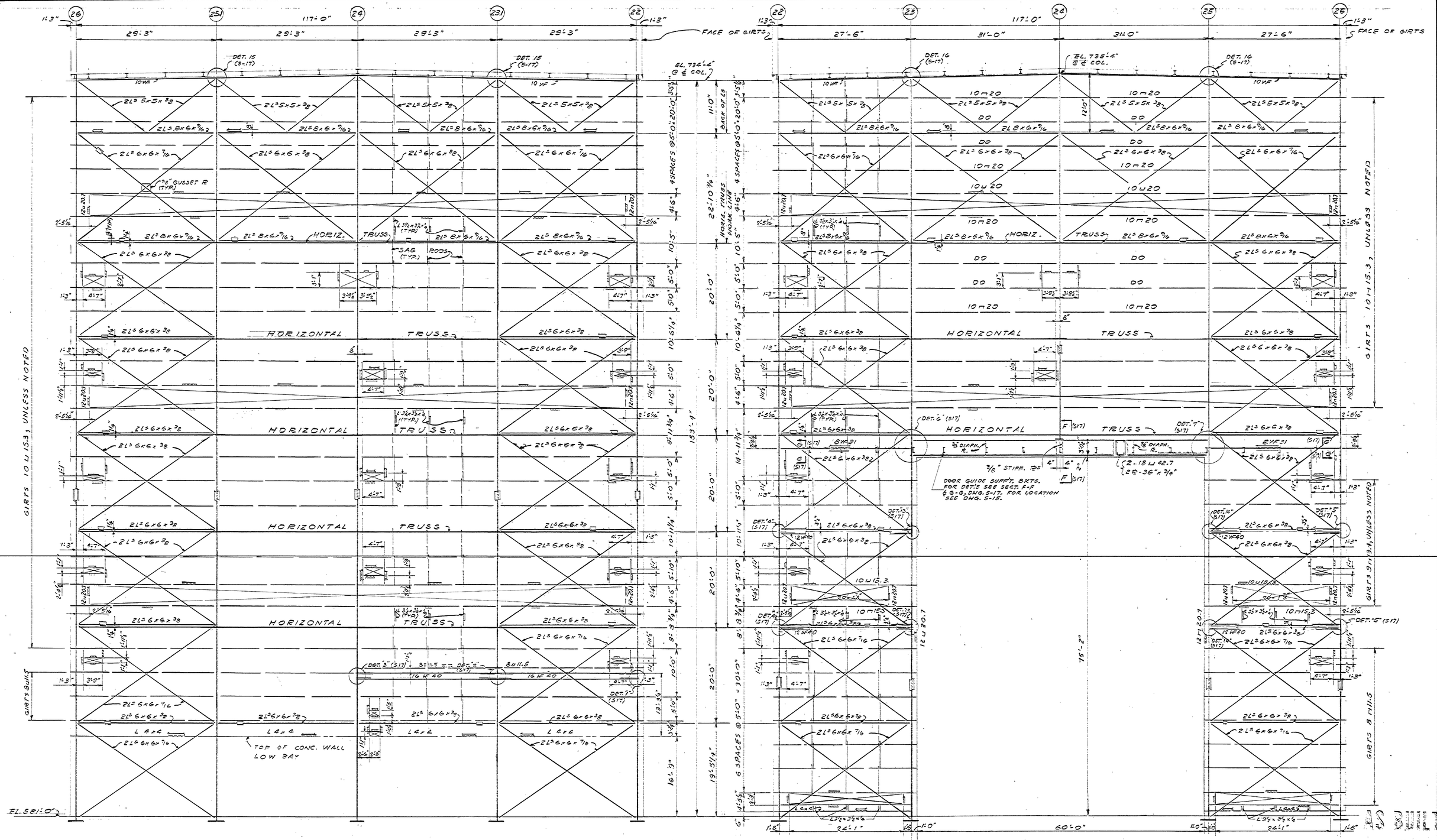

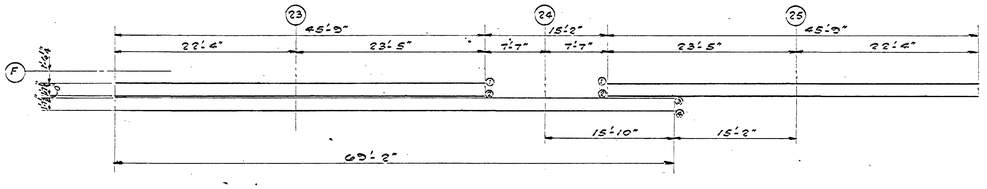

NOTES

1. FOR GENERAL NOTES, SEE DWG. S-12
2. ALL SAG RODS ARE 5/8" ϕ, LOCATED AT ½ POINTS OF SPANS, EXCEPT TO CLEAR OPENINGS. (SHOWN FOR ONE BAY; TYP. FOR OTHERS.)
3. FRAMING AROUND OPENINGS TO BE ℄ L11.5, EXCEPT AS NOTED.
4. FOR HORIZ. TRUSS DETAILS SEE DWG. S-15.
5. FOR SECT.'S & DET.'S SEE DWG. S-17.
6. FOR ALL MEMBERS SHOWN WITH NO STRESSES, CONNECTIONS SHALL BE DEVELOPED FOR 50% OF CAPACITY OF MEMBERS AT 20,000 P.S.I. OF GROSS AREA.
7. ALL GUSSET PL.'S SHALL BE ⅜" THK. UNLESS NOTED.

APPROVED FOR SAFETY
OCT 20 1962
DATE

REV.	BY	DATE	C.I. NO.	APPROVED

NATIONAL AERONAUTICS AND SPACE ADMINISTRATION — M S F C, HUNTSVILLE, ALABAMA

VITRO ENGINEERING COMPANY A DIVISION OF VITRO CORPORATION OF AMERICA — NEW YORK

ADDITION TO BUILDING 4619 - LOAD TEST ANNEX
BUILDING ANNEX - HIGH BAY
NORTH & SOUTH ELEVATIONS

NASA AE CONT. NO. NASA 8-2145 — FILE NO. MSFC 7408

SUBMITTED: CHIEF, DES. BR'CH. 10-23-62	APPROVAL RECOMMENDED: LAB. DATE: 10-23-62	APPROVED: CHIEF, ENGINEERING BRANCH. NASA DATE: 10-25-62
A.E. DATE: SEPT. 14, 1962		
DESIGNED N.C. DRAWN M.L.H. CHECKED S.J.C.	APPROVED RECOMMENDED: CHIEF, DESIGN SECTION. DESIGN DATE: 10-22-62	DRWG. NO. FE-C-4619-S-13
SCALE: 1/8"=1'-0"	SPEC. NO. FE-D-309	

MSFC MASTER BID DISK 11-18-2013

FORM No. 1000.807-0

A B C D E F G

1 2 3 4 5

F E C.8 B.9 A.9 A.7 A.7 A.9 B.9 C.8 E F

122'-11" 24'-7" 24'-7" 24'-7" 24'-7" 24'-7" 1'-6"

O.F. GIRTS

5/8" ϕ SAG RODS @ ½ PTS. (TYP. BAY)

2L³ 8x6x7/16 2L³ 5x5x3/8 2L³ 5x5x7/16 2L³ 6x4x3/8 2L³ 5x5x1/2 L 8x6x7/16 2L³ 5x5x5/8

HORIZ. TRUSS

HORIZ. TRUSS WORK LINE

BACK OF I-B

EL. 732'-4" @ ℄ COLS. "22" & "26"

DOOR GUIDE SUPPORTS @ 6'-0" (MAX.)

8WF31 J (S17) K (S17)

EL. 581'-0"

EL. 602'-10"

7 @ 9.8 (TYP.)

7 @ 9.8 GIRTS

6 SPACES @ 5'-0" = 30'-0"

5 SPACES @ 10'-0" = 50'-0"

2 SPACES @ 10'-0" = 20'-0"

3 @ 13.4 GIRTS

11'-0" 10'-0" 20'-0" 20'-0" 20'-0" 10'-0" 10'-0" 142'-4"

SEE DET. "A"

EAST ELEVATION

WEST ELEVATION

SIZES OF BRACING MEMBERS ARE SAME AS EAST ELEVATION.

NOTES:
1. FOR GENERAL NOTES SEE DWG. S-12
2. FOR ADDITIONAL NOTES SEE DWG. S-13.

DETAIL "A"
SCALE ½" = 1'-0"

EXISTING CURB
EXISTING L 4x4x3/4
OUTLINE OF EXIST. PIER
℄ COL.
SLOPE
EXISTING L 4x4x3/4

ELEVATION "B"
SCALE ½" = 1'-0"

NEW L 4x4x3/8
CAULK UNDER ANGLE
CUT SIDING IN FIELD TO SUIT
TOP OF CONC.
TOP OF EXIST. CURB
EL. 581'-0"
ANCHOR CONCRETE TO COL. BASE IN FIELD TO SUIT.

APPROVED FOR SAFETY
OCT 20 1962
DATE

REV.	BY	DATE		C.I. NO.	APPROVED
1	W.D.S.	1-21-64	REVISED COL. BRACES @ COLS. A.1-22, E-22, A.1-26 & E-26	5610-17	

NATIONAL AERONAUTICS AND SPACE ADMINISTRATION — M S F C — HUNTSVILLE, ALABAMA

VITRO ENGINEERING COMPANY A DIVISION OF VITRO CORPORATION OF AMERICA — NEW YORK

ADDITION TO BUILDING 4619 - LOAD TEST ANNEX
BUILDING ANNEX - HIGH BAY
EAST & WEST ELEVATIONS

NASA AE CONT. NO. NASA 8-2145 — FILE NO. MSFC 7409

SUBMITTED:	APPROVAL RECOMMENDED:	APPROVED:	
CHIEF DES. ENG'R. DATE: 9-13-62	DES. DATE: 10-22-62	CHIEF, ENGINEERING BRANCH	
AE DATE: SEPT. 14, 1962		NASA DATE: 10-25-62	
DESIGNED N.C.	APPROVAL RECOMMENDED:	DRWG. NO.	
DRAWN M.V. RUSSO	CHIEF, DESIGN SECTION	FE-C-4619-S-14	
CHECKED S.H.C.	DESIGN DATE: 10-22-62		
SCALE 1/8"=1'-0" UNLESS NOTED	SPEC. NO. FE-D-303		

MSFC MASTER BID DISK 11-18-2013

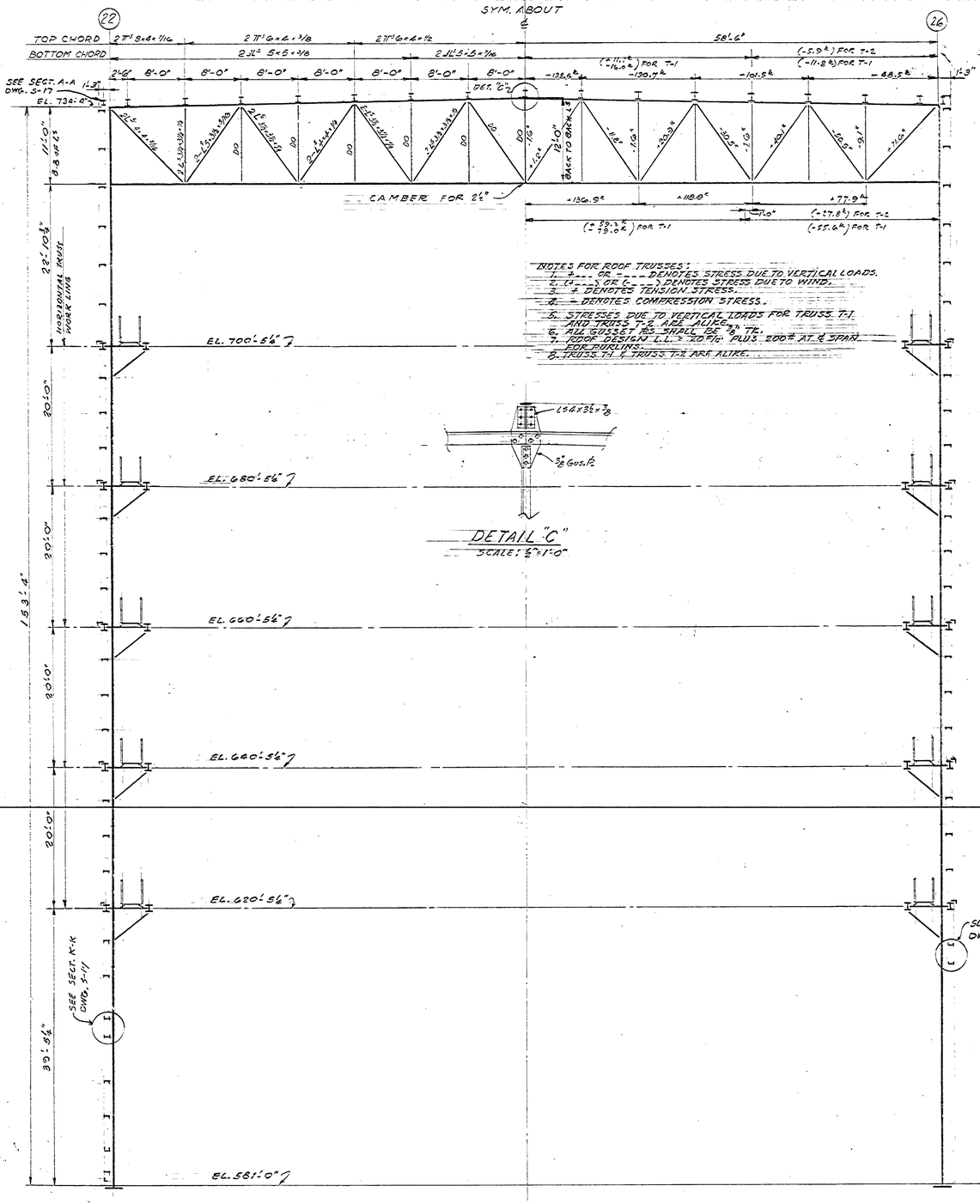

SECTION B-B

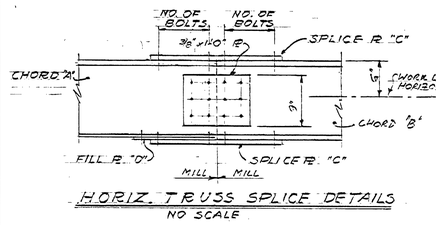

HORIZ. TRUSS SPLICE DETAILS
NO SCALE

HORIZONTAL TRUSS SPLICE SCHEDULE

LOCATION & ELEVATION	CHORD "A"	CHORD "B"	SPLICE R "C"	FILL R "D"	NO. OF BOLTS
NORTH: EL. 620'-5⅛, 640'-5⅛, 660'-5⅛, 680'-5⅛ & 700'-5⅛	12WF40	12WF65	8"x½"x2'-0"	8"x⅝"x1'-3"	8
SOUTH: EL. 680'-5⅛, 700'-5⅛					
SOUTH: EL. 660'-5⅛	12WF53	12WF85	10"x⅝"x2'-6"	10"x½"x1'-6"	10
EAST & WEST: EL. 620'-5⅛	12WF53	12WF79	10"x⅝"x2'-0"	10"x⅜"x1'-3"	8
EAST & WEST: EL. 640'-5⅛, 660'-5⅛, 680'-5⅛ & 700'-5⅛	12WF65	12WF72	8"x⅝"x2'-0"	8"x½"x1'-3"	8

MSFC MASTER BID DISK 11-18-2013

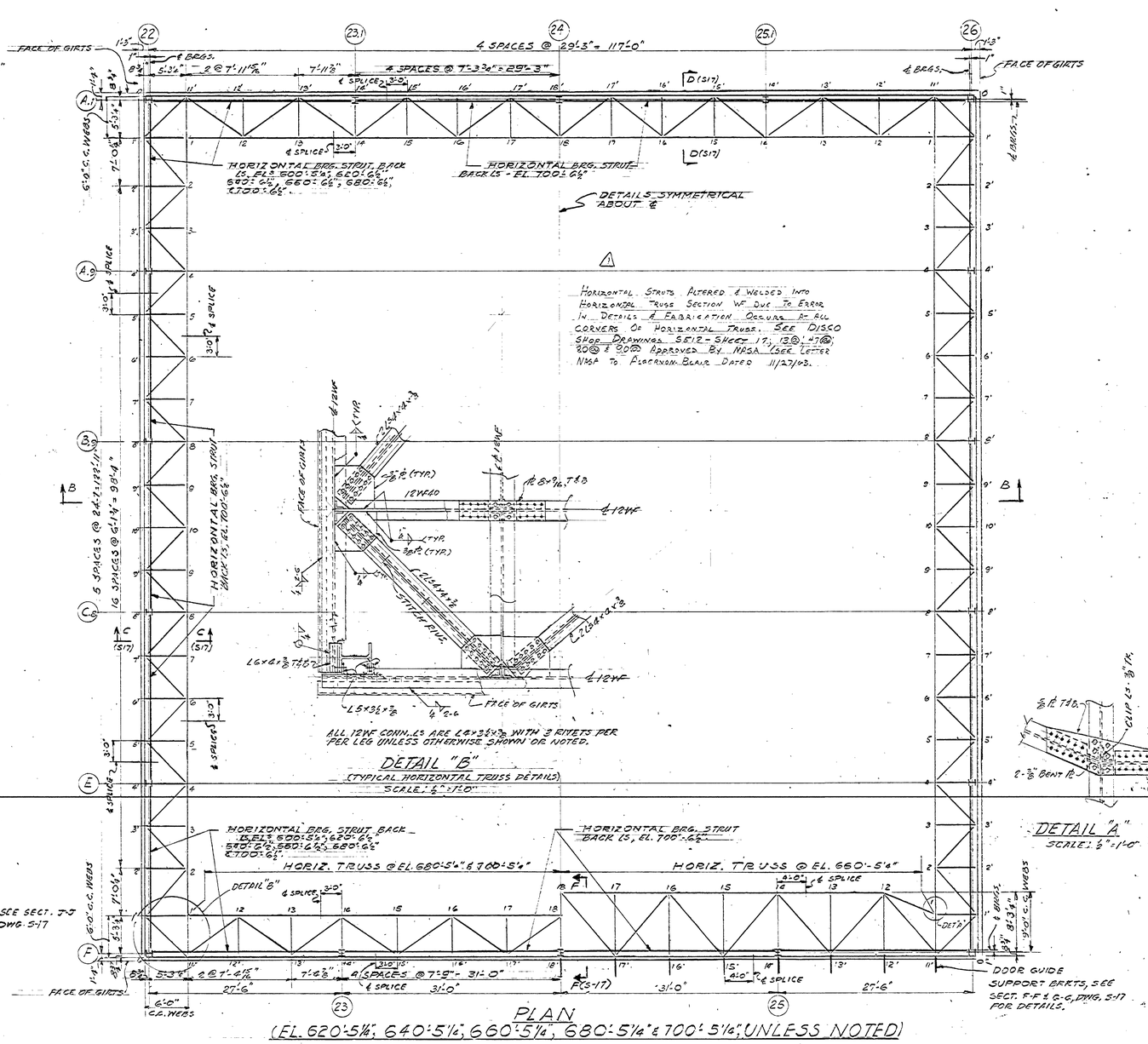

HORIZONTAL TRUSS SCHEDULE

	MEMBER	NORTH EL. 620'-5⅛, 640'-5⅛, 660'-5⅛, 680'-5⅛ & 700'-5⅛ STRESS (K)	NORTH SECTION	SOUTH EL. 660'-5⅛ STRESS (K)	SOUTH SECTION	EAST AND WEST EL. 620'-5⅛ MEMBER	EAST AND WEST EL. 620'-5⅛ STRESS (K)	EAST AND WEST EL. 620'-5⅛ SECTION	EAST AND WEST EL. 640'-5⅛, 660'-5⅛, 680'-5⅛ & 700'-5⅛ STRESS (K)	EAST AND WEST EL. 640'-5⅛, 660'-5⅛, 680'-5⅛ & 700'-5⅛ SECTION	REMARKS
OUTSIDE CHORD	0 - 11'			0	2L6x6x⅜	0 - 1'	0		0		ALL STRESSES ARE DUE TO WIND.
	11' - 13'	±38.48	12WF40	±91.8	+12WF53	1' - 3'	±61.0	12WF53	±55.0	12WF45	
	13' - 15'	±116.96	+L6x3½x½	±183.5	SEE SECT. G-G (DWT)	3' - 5'	±122.0	+L6x3½x½	±110.0	+L5x3½x½	
	15' - 17'	±136.49		±190.8	2L5x3½x5/16	5' - 7'	±152.5		±137.9		
	17' - 18'	±156.02	12WF65	±197.5	+12WF85	7' - 9'	±183.0	12WF79	±165.0	12WF72	
			+L6x3½x½		SEE SECT. F-F (DWT)	9' - 10'		+L3½x3½x½		+L3½x3½x½	
INSIDE CHORD	1' - 1	±29.2				11' - 2	±30.6		±27.6		
	1 - 12	±29.2	12WF40	±65.8	12WF53	2 - 4	±91.5	12WF53	±82.9	12WF45	
	12 - 14	±87.72		±138.0		4 - 6	±137.0		±123.5		
	14 - 16	±126.72	12WF65	±187.5	12WF85	6 - 8	±167.8	12WF79	±150.2	12WF72	
	16 - 18	±146.2		±195.0		8 - 10	±183.0		±165.0		
DIAGONALS						1'-11'					ALL STRESSES ARE DUE TO WIND, VERTICAL LOADS DOWN. STRESSES DENOTED * THUS ARE DUE TO VERTICAL LOADS.
	11' - 12	±37.8	2L5x4x4x⅜	±75.4	2L5x4x4x⅜	1' - 2	±42.8	2L5x4x4x⅜	±38.6	2L5x4x4x⅜	
	12 - 13'					2 - 3'					
	13 - 14					3 - 4					
	14 - 15	±12.6	2L5x4x4x½	± 5.7	2L5x4x4x½	4 - 5'	± 21.4	2L5x4x4x½	± 19.3	2L5x4x4x½	
	15 - 16					5 - 6					
	16 - 17					6 - 7					
	17 - 18					7 - 8					
						8 - 9	0	2L5x3½x3½x½	0		
						9' - 10					
STRUTS	12 - 12'	0	2L5x3½x3½x¼	0	2L5x3½x3½x¼	2 - 2'					
	12 - 13'					3 - 3'					
	13 - 15'					5 - 5'					
	15 - 15'					6 - 6'	0	2L5x3½x3½x½	0	2L5x3½x3½x½	
	16 - 16'					7 - 7'					
	17 - 17'					9 - 9'					
	16 - 18'	± 16.0		±55.8 -15.0	2L5x4x4x¼	10 - 10'					
	18 - 18'	≥ 10.0*		± 8.6 +30.0		8 - 2'	± 15.0		± 13.6		
						8 - 8'	± 10.0*		≥ 10.0		

NOTES:
1. FOR GENERAL NOTES SEE DWG. S-12.
2. ALL GUSSET PL'S FOR HORIZONTAL TRUSSES ARE ⅜" THK.
3. MINIMUM CONNECTION FOR HORIZONTAL TRUSS DIAGONALS AND STRUTS SHALL DEVELOP HALF OF GROSS AREA OF MEMBER @ 22 K/in².

AS BUILT

REV.	BY	DATE	
△	GC	8-11-65	As-Built

C.I. NO. | APPROVED

NATIONAL AERONAUTICS AND SPACE ADMINISTRATION — M S F C — HUNTSVILLE, ALABAMA

VITRO ENGINEERING COMPANY A DIVISION OF VITRO CORPORATION OF AMERICA NEW YORK

ADDITION TO BUILDING 4619 - LOAD TEST ANNEX
BUILDING ANNEX - HIGH BAY - TYPICAL SECTION & HORIZONTAL TRUSSES

NASA AE CONT. NO. NASA 8-2145 | FILE NO. M S F C 7410

SUBMITTED: CHIEF, DES. ENG'G.	APPROVAL RECOMMENDED:	APPROVED: CHIEF, ENGINEERING BRANCH	DRWG. NO. FE-C-4619-S-15
AE: DATE: SEPT. 16, 1962	LAB: DATE: 10-22-62	NASA: DATE: 10-25-62	
DESIGNED N.C. DRAWN T.P. & N.C. CHECKED S.G.C.	APPROVED RECOMMENDED: CHIEF, DESIGN SECTION		
SCALE: 1" = 1'-0"	DESIGN DATE: 10-22-62		
	SPEC. NO. FE-7-303		

APPROVED FOR SAFETY
OCT 8 0 1962
DATE

DELUXE PRESS INC., BROOKLYN N.Y. STOCK NO. 640

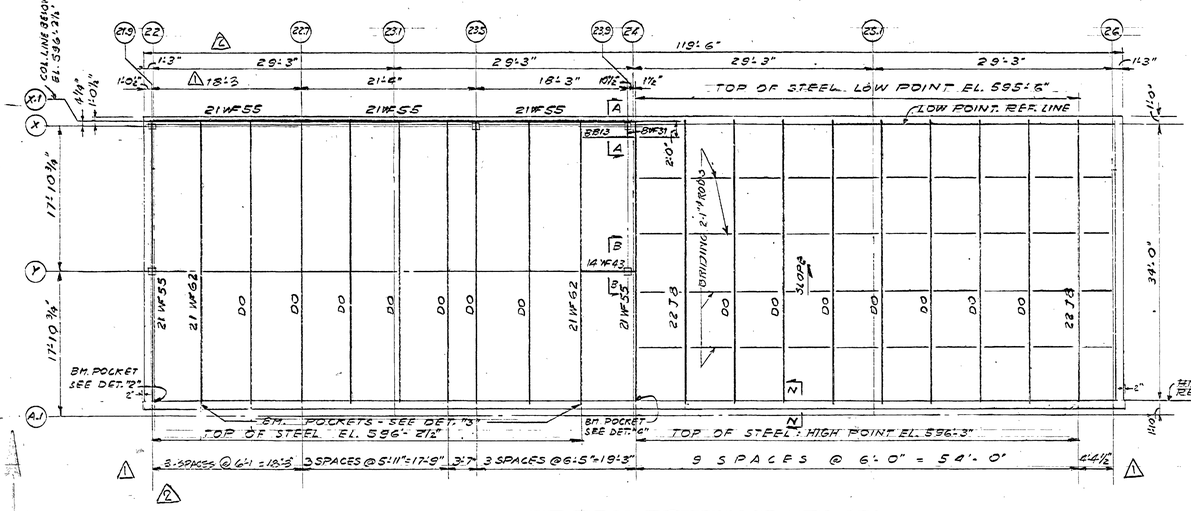

STEEL FRAMING PLAN

T.O.S. EL AS SHOWN

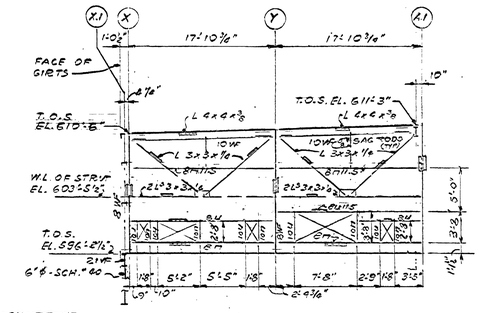

ELEVATION ALONG COL. LINE "21.9"

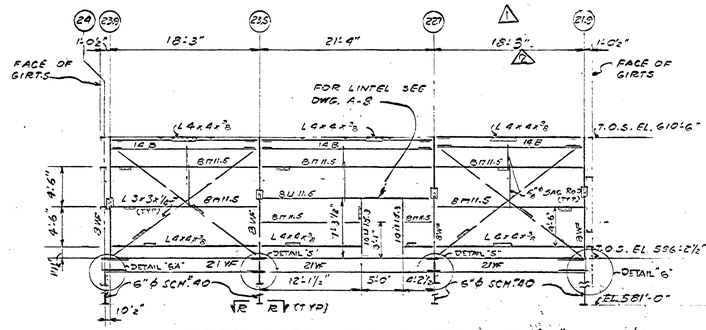

ELEVATION ALONG COL. LINE "X"

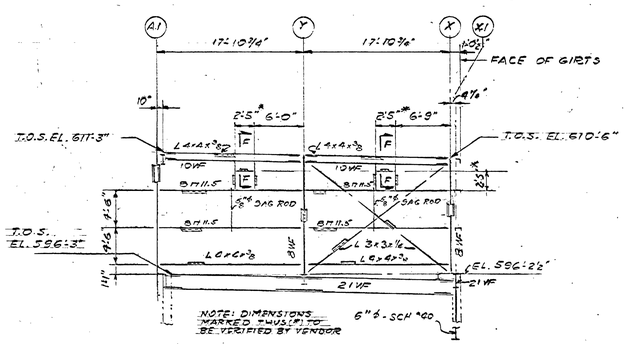

ELEVATION ALONG COL. LINE "23.9"

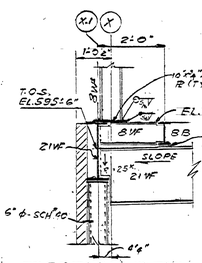

SECTION A-A

SCALE: ½"=1'-0"

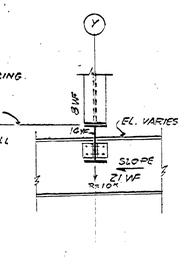

SECTION B-B

SCALE: ½"=1'-0"

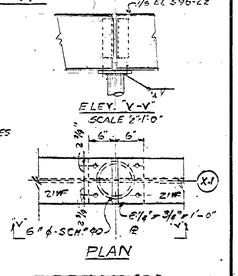

DETAIL "5"

SCALE 1"=1'-0"

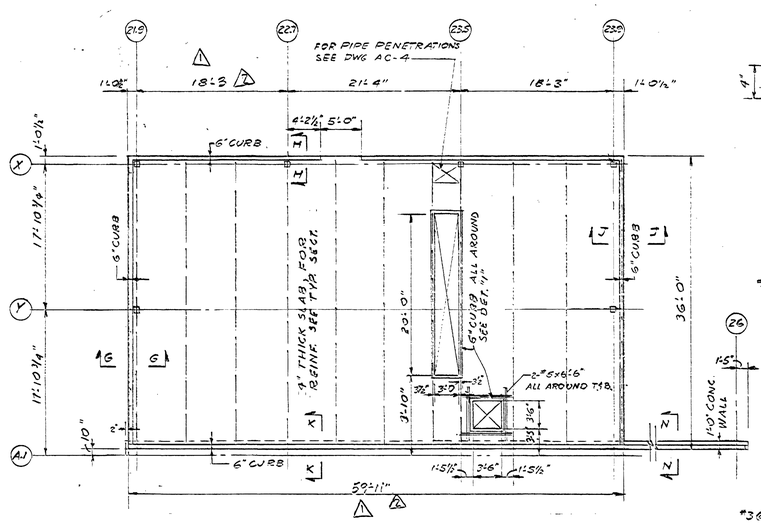

FLOOR PLAN AT EL. 596'-6"

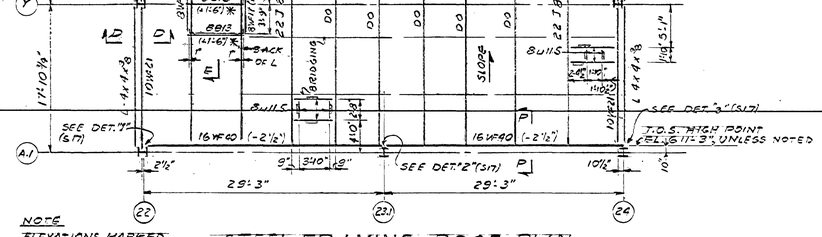

STEEL FRAMING - ROOF PLAN

T.O.S. EL. AS SHOWN

NOTE

ELEVATIONS MARKED (T/S) ARE IN REFERENCE TO HIGH POINT EL.

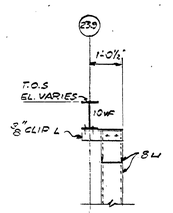

SECTION F-F

SCALE: ⅞"=1'-0"

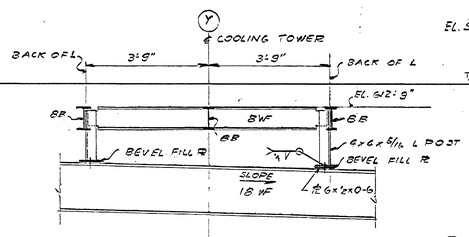

SECTION E-F

SCALE: ½"=1'-0"

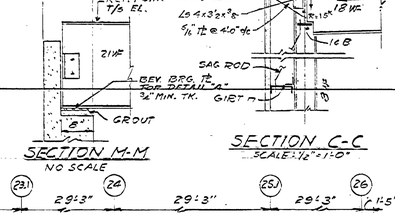

DETAIL "2"

DETAIL "3"

DETAIL "4"

NO SCALE

SECTION M-M

NO SCALE

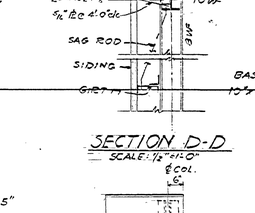

SECTION C-C

SCALE: ½"=1'-0"

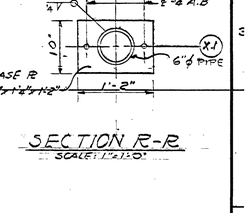

SECTION D-D

SCALE: ½"=1'-0"

SECTION R-R

SCALE: 1"=1'-0"

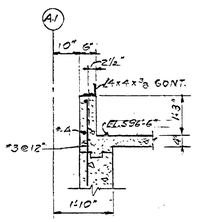

SECTION K-K

SCALE: ½"=1'-0"

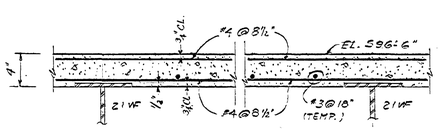

TYPICAL SLAB REINFORCING

SCALE: 1½"=1'-0"

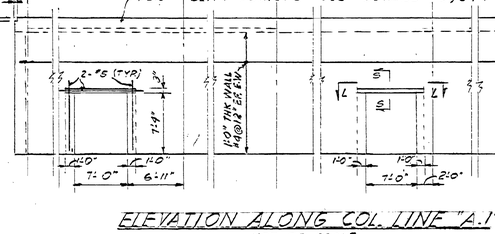

ELEVATION ALONG COL. LINE "A.1"

NOT TO SCALE

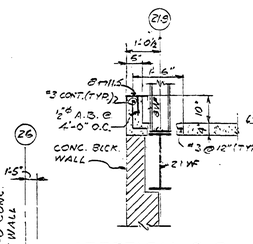

SECTION G-G

SCALE: ½"=1'-0"

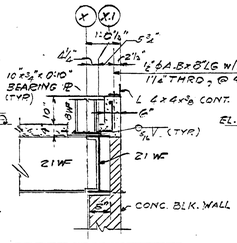

SECTION H-H

SCALE: ½"=1'-0"

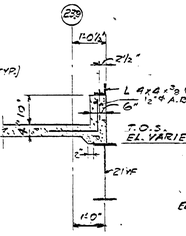

SECTION J-J

SCALE: ½"=1'-0"

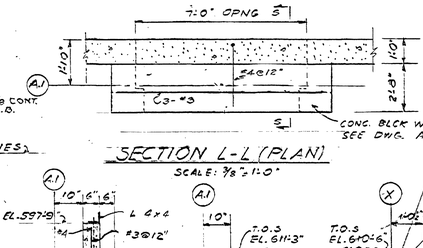

SECTION L-L (PLAN)

SCALE: ⅜"=1'-0"

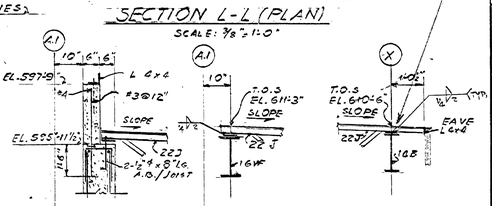

SECTION N-N

SCALE: ½"=1'-0"

SECTION P-P

SCALE: ½"=1'-0"

SECTION Q-Q

SCALE: ½"=1'-0"

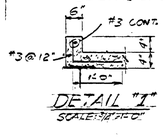

DETAIL "1"

SCALE: ⅞"=1'-0"

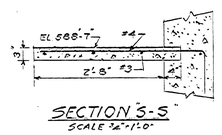

SECTION S-S

SCALE ¾"=1'-0"

NOTES:

1. FOR GENERAL NOTES SEE DWG. S-12
2. ALL GUSSET PLTS ⅜" UNLESS NOTED
3. FOR ADDITIONAL NOTES SEE DWG. S-18
4. ALL COLUMNS SHALL BE BWF31 UNLESS NOTED.

3 Revised To Conform To Section C-C Marking Eave Angle Level. (See Approval NASA to Alderman-Blair)

AS BUILT

REV.	BY	DATE		C.I. NO.	APPROVED
2	SG	9-4-63	As-Built		
1	W.D.S.	5-28-63	DWG. REVISED	5560-1	
0	W.D.S.	1-29-63	DWG. REVISED	C.T. 5560-1	

NATIONAL AERONAUTICS AND SPACE ADMINISTRATION — M S F C, HUNTSVILLE, ALABAMA

VITRO ENGINEERING COMPANY A DIVISION OF VITRO CORPORATION OF AMERICA — NEW YORK

ADDITION TO BUILDING 4619 - LOAD TEST ANNEX

BUILDING ANNEX - LOW BAY FRAMING PLAN

SECTIONS & DETAILS

NASA AE CONT. NO. NASA 8-2145 — FILE NO. MSFC 7411

SUBMITTED: CHIEF, DES. ENG'G.	APPROVAL RECOMMENDED:	APPROVED: CHIEF, ENGINEERING BRANCH	
A/E: DATE: SEPT. 14, 1962	LA&M: DATE: 10-22-62	NASA: DATE: 12-3-62	
DESIGNED N.C. DRAWN M.M.M. CHECKED S.Y.C.	APPROVAL RECOMMENDED: CHIEF, DESIGN SECTION	DRWG. NO. FE-C-4619-S-16	
SCALE: ⅛"=1'-0", OR AS NOTED	DESIGN DATE: 10-22-62	SPEC. NO. FS-D-383	

APPROVED FOR SAFETY — Safety Engr. — DOT R.D. 1962 DATE

MSFC MASTER BID DISK 11-18-2013

MSFC-FORM 232 (REV. DEC., 1960)

DIETZGEN PRINTS, INC., BROOKLYN 31, N.Y., STOCK NO. 459

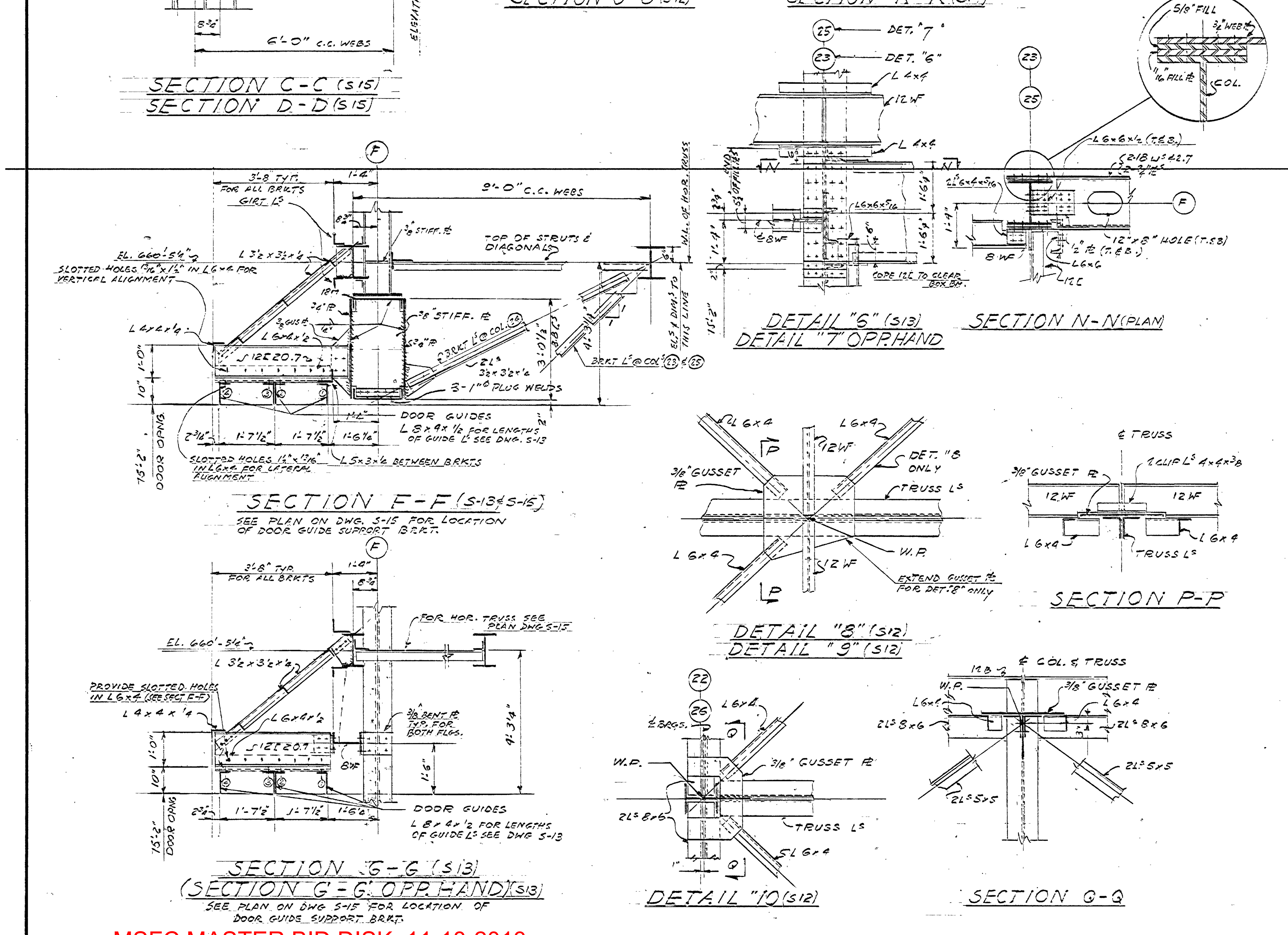

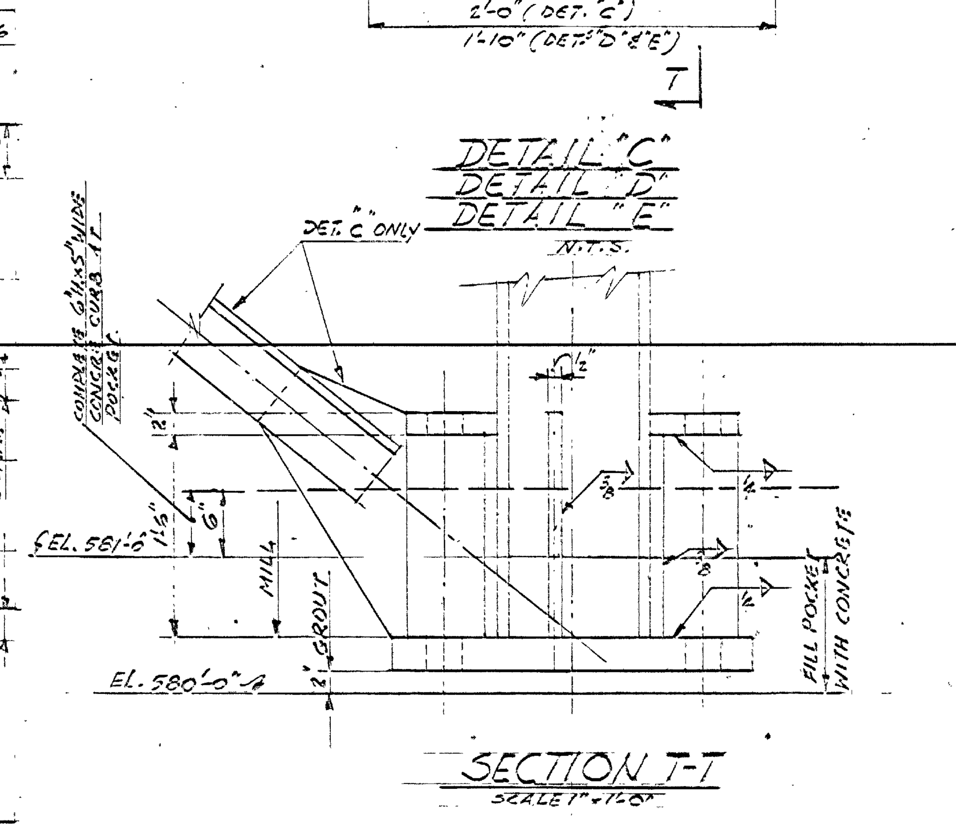

COLUMN SCHEDULE

COLUMN	A.1-22	A.1-23.1	A.1-24	A.1-25.1	A.1-26	A.9-22	A.9-26	B.9-22	B.9-26	C.8-22	C.8-26	E-22	E-26	F-22	F-23	F-24	F-25	F-26
Upper section (EL. 723'-4" bot. chord of roof truss to splice)	10WF112	10WF112	10WF89	10WF112	10WF112	10WF112	10WF112	10WF89	10WF89	10WF89	10WF89	10WF112	10WF112	10WF112	10WF112	10WF72	10WF112	10WF112
Lower section (splice to EL. 580'-½" bottom of base PL)	12WF133	12WF133	10WF112	12WF133	12WF133	12WF133	12WF133	10WF112	10WF112	10WF112	10WF112	12WF133	12WF133	12WF133	14WF184		14WF184	12WF133
TOTAL BILLET LOADS IN KIPS	696	495	136	495	696	574	574	144	160	152	160	574	574	696	551	67	551	696
BASE PLS	24"×3"×2'-8" DET. "C"	22"×2½"×2'-4" DET. "D"	15"×1¼"×1'-3" DET. "A"	22"×2½"×2'-4" DET. "D"	24"×3"×2'-8" DET. "C"	22"×2½"×2'-4" DET. "D"	22"×2½"×2'-4" DET. "D"	15"×1¼"×1'-3" DET. "A"	16"×1¼"×1'-4" SIMILAR DET. "A"	15"×1¼"×1'-3" DET. "A"	16"×1¼"×1'-4" SIMILAR DET. "A"	22"×2½"×2'-4" DET. "D"	24"×2½"×2'-8" SIMILAR DET. "D"	24"×3"×2'-8" DET. "C"	22"×2½"×2'-4" DET. "E"	12"×¾"×1'-1" DET. "B"	22"×2½"×2'-4" DET. "E"	24"×3"×2'-8" DET. "C"

Elevations: EL. 723'-4" BOT. CHORD OF ROOF TRUSS B. OF L^S; EL. 700'-5½" W.L. HORIZ. TRUSS; EL. 680'-5½" W.L. HORIZ. TRUSS; ℄ SPLICE; EL. 660'-5½" W.L. HORIZ. TRUSS; EL. 640'-5½" W.L. HORIZ. TRUSS; ℄ SPLICE; EL. 620'-5½" W.L. HORIZ. TRUSS; EL. 580'-½" BOTTOM OF BASE PL.

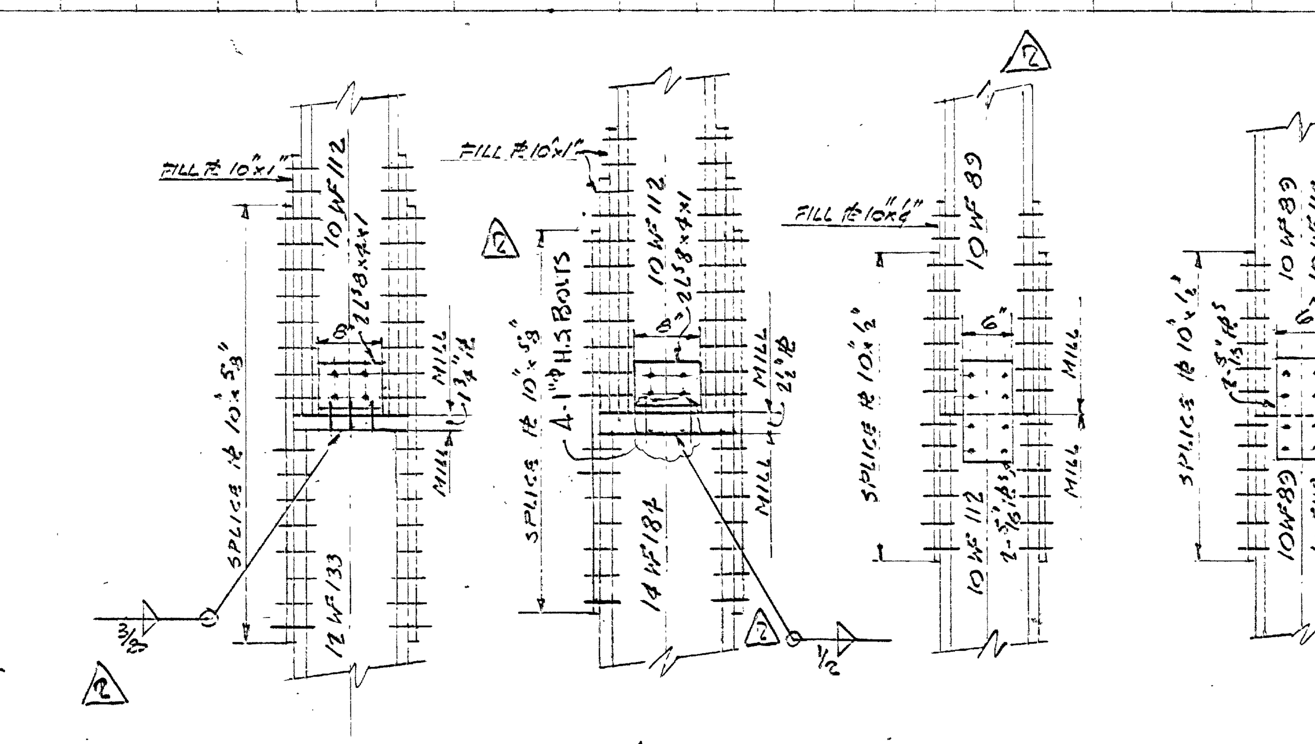

NOTES:
1) FOR GENERAL NOTES SEE DWG. S-12

THE FOLLOWING COLS. WERE DESIGNED FOR ADDITIONAL LOADS ON FUTURE EXTENSION.

A.1-26 --- 70^k
A.9-26 --- 40^k
B.9-26 --- 25^k
C.8-26 --- 25^k
E-26 --- 70^k

AS BUILT

REV.	BY	DATE		C.I. NO.	APPROVED
2	W.O.S.	1-29-63	SIMILAR ADDED TO BASE PL. DETS. COL. SPLICES REVISED	C.I. 5560-1	
1	W.O.S.	12-17-62	EXTENDED ½L IN SECTION L-L	AMEND #1	

NATIONAL AERONAUTICS AND SPACE ADMINISTRATION — MSFC HUNTSVILLE, ALABAMA

VITRO ENGINEERING COMPANY A DIVISION OF VITRO CORPORATION OF AMERICA NEW YORK

ADDITION TO BUILDING 4619-LOAD TEST ANNEX BUILDING ANNEX-COLUMN SCHEDULE, SECTIONS & DETAILS

NASA AE CONT. NO. NASA 8-2145 — FILE NO. MSFC 7412

SUBMITTED: CHIEF DES. ENG'R. — AE. DATE: SEPT. 14, 1962
APPROVAL RECOMMENDED: LAB. DATE: 10-22-62
APPROVED: CHIEF, ENGINEERING BRANCH — NASA DATE: 10-25-62
DESIGNED M.L.H. DRAWN M.L.H. CHECKED J.Y.C.
APPROVAL RECOMMENDED: CHIEF, ~~DESIGN~~ SECTION
DESIGN DATE: 10-22-62
SCALE: ½"=1'-0" SPEC. NO. FE-D-303
DRWG. NO. FE-C-4619-S-17

APPROVED FOR SAFETY OCT 20 1962

MSFC MASTER BID DISK 11-18-2013

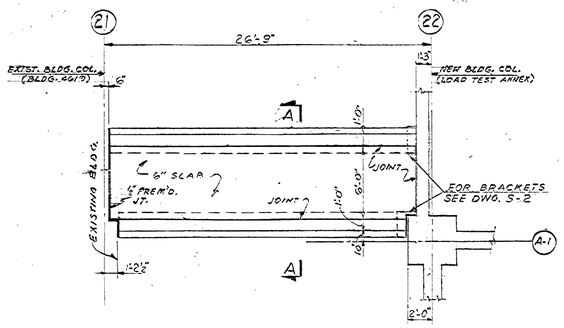

PART PLAN - CONNECTING CORRIDOR FOUNDATION

(SCALE: 3/16"=1'-0")

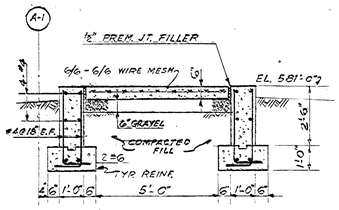

SECTION A-A

(SCALE: 3/8"=1'-0")

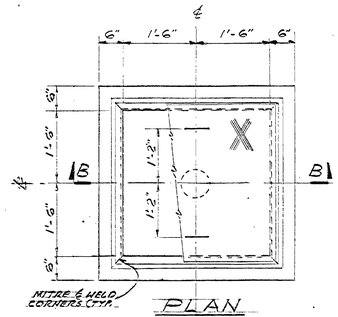

PLAN

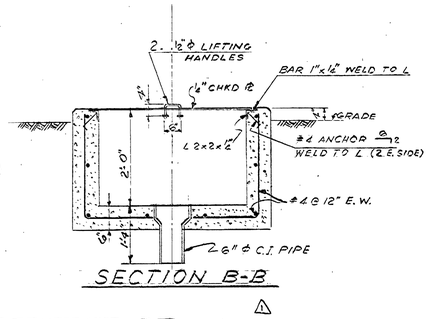

SECTION B-B

TYPICAL GROUNDING PIT (3 REQ'D)

(FOR LOCATION SEE ELECTRICAL DWGS.)

SCALE: 3/4"=1'-0"

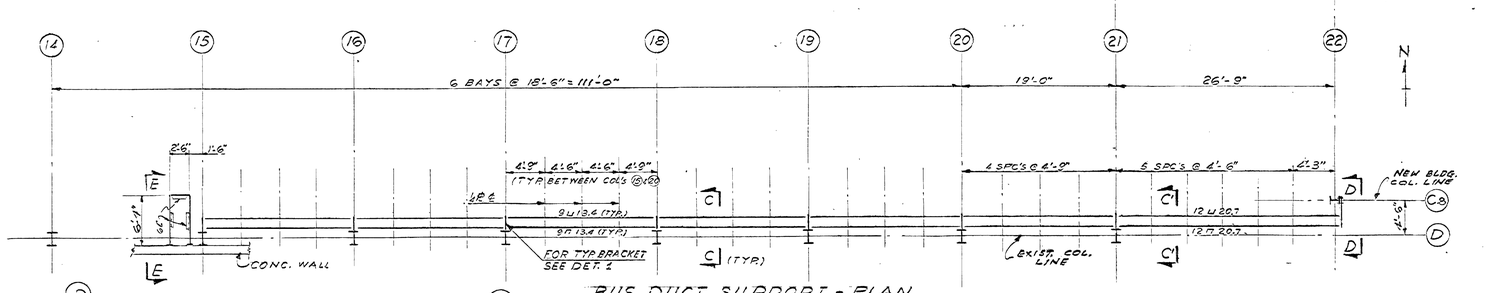

BUS DUCT SUPPORT - PLAN

SCALE: 1/8"=1'-0"

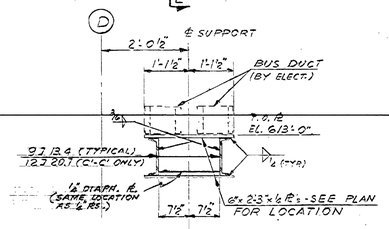

SECTION C-C (AS SHOWN)

SECTION C'-C' (AS NOTED)

SCALE: 3/4"=1'-0"

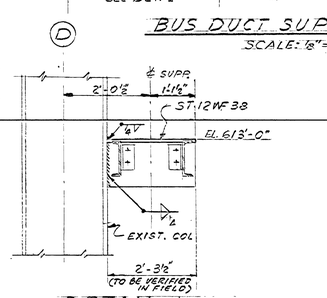

DETAIL 1 (7 REQ'D)

SCALE: 3/4"=1'-0"

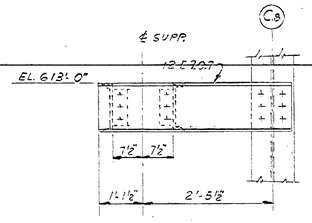

SECTION D-D

SCALE: 3/4"=1'-0"

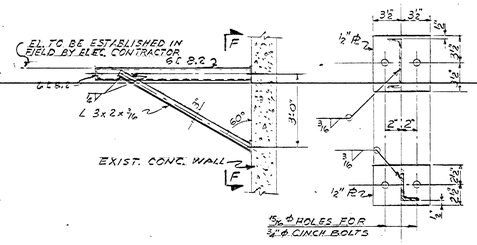

SECTION E-E

SCALE: 3/4"=1'-0"

SECTION F-F

SCALE: 1½"=1'-0"

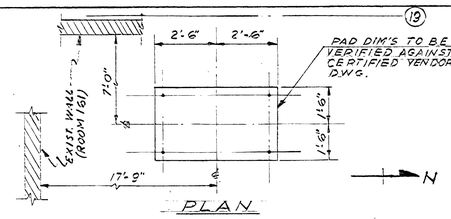

PLAN

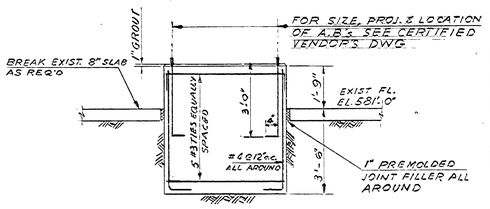

ELEVATION

COMPRESSOR PAD IN EXISTING BLDG.

SCALE: 3/8"=1'-0"

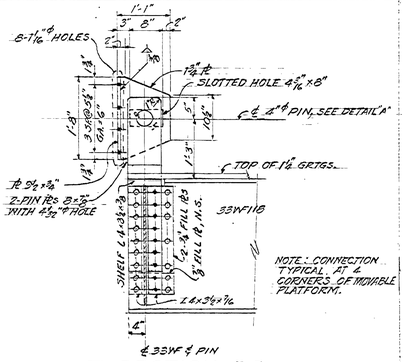

SECTION E-E (S-10)

SCALE: 3/4"=1'-0"

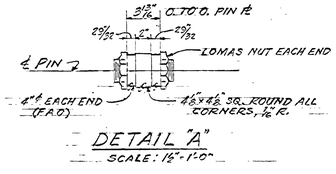

DETAIL "A"

SCALE: 1½"=1'-0"

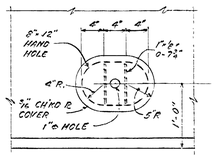

PLAN

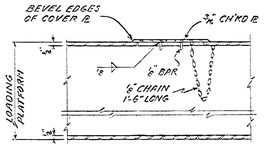

SECTION

HAND HOLE DETAIL (S-9)

Scale: 1"=1'-0"

NOTE: ALL EDGES AND CORNERS OF COVER AND HANDHOLE SHALL BE GROUND SMOOTH.

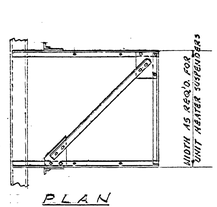

SECTION

DET. UNIT HEATER SUPPORTS

SCALE: 3/8"=1'-0"

NOTE: ALL L'S 6"x4"x5/16; ALL GUSSET R'S 5/16.

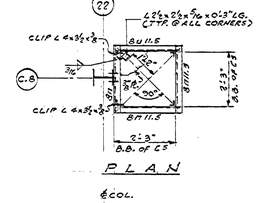

SECTION

DET. CONDENSATE PUMP SUPP. (2 REQ'D.)

SCALE: 3/8"=1'-0"

NOTE: SUPPORT FOR PUMP @ COL. E-26 SIMILAR.

Approved For Safety
Safety Office
Date

NOTES:

1. Concrete design in accordance with A.C.I. Building Code (ACI 318-56).
2. Allowable soil pressure = 3000#/s.f.
3. All concrete shall have a minimum compressive strength of 3,000 Lbs. per sq. inch after 28 days.
4. Chamfer all exposed concrete edges thus
5. All reinforcing steel shall be deformed intermediate grade new billet steel ASTM A 15 (Fed. Spec. QQ-S-632) deformed in accordance with ASTM A 305.
6. Minimum concrete protection for reinforcing unless otherwise noted:

   General. . . . . 1 Bar Dia. or as noted (3/4" min.)
   Slabs. . . . . 3/4"
   Beams & Girders. . . 1-1/2" over Stirrups
   Columns. . . . . 1-1/2" over Ties
   Formed Surfaces Exposed to Ground or Weather . . . . . 2"
   Unformed Surfaces Exposed to Ground. . . . . 3"
   Bars to Clear Inserts in Walls, Slabs, or Ceilings.

7. Reinforcing Splice Data: Lap reinforcing bars min. 30 Dia. or 15", Splices may be tied together. Min. clear distance between adjacent splices or bars to be 1 Bar Dia., 1-1/2" or 1-1/2 times max. size coarse aggregate, whichever is greater.
8. Dowels to be same size and spacing as wall and column reinforcing and to be spliced as noted above.
9. All reinforcing, steel, anchor bolts and embedded items shall be secured in position before placing concrete. See Electrical and Mechanical drawings for ducts, openings, sleeves, etc. not otherwise detailed.
10. Welded wire fabric reinforcing in slabs on grade shall be lapped 6" on sides and ends.
11. For contraction joints in concrete slabs see Specifications and typical details.
12. Location of construction joints in concrete slabs and walls shall be approved by the Contracting Officer and shall conform to typical details.
13. For general notes see Dwg. S-12.

AS BUILT

REV.	BY	DATE		C.I. NO.	APPROVED
1	W.G.S.	12-27-62	REVISED NO. OF GROUNDING PITS REQ'D.	-	

NATIONAL AERONAUTICS AND SPACE ADMINISTRATION — M S F C HUNTSVILLE, ALABAMA

VITRO ENGINEERING COMPANY A DIVISION OF VITRO CORPORATION OF AMERICA NEW YORK

ADDITION TO BUILDING 4619 - LOAD TEST ANNEX
MISCELLANEOUS DETAILS

NASA AE CONT. NO. NASA 8-2145		FILE NO. MSFC 7413
SUBMITTED: H.L. Wagner; CHIEF, DES. ENGR.	APPROVAL RECOMMENDED: W.J. Lawler	APPROVED: Wernher von Braun; CHIEF, ENGINEERING BRANCH
AE: DATE: SEPT. 14, 1962	LAB: DATE: 10-22-62	NASA: DATE: 1-10-63
DESIGNED M.S. DRAWN M. SEMINATORE CHECKED S.J.C.	APPROVAL RECOMMENDED: Cook Fawcett, CHIEF, DESIGN SECTION	DRWG. NO. FE-C-4619-S-18
SCALE: AS SHOWN	DESIGN DATE: 10-22-62	
	SPEC. NO. FE-D-303	

MSFC MASTER BID DISK 11-18-2013

DAVIDSON PRESS, INC., BROOKLYN 19, N.Y., STOCK NO. 4A2

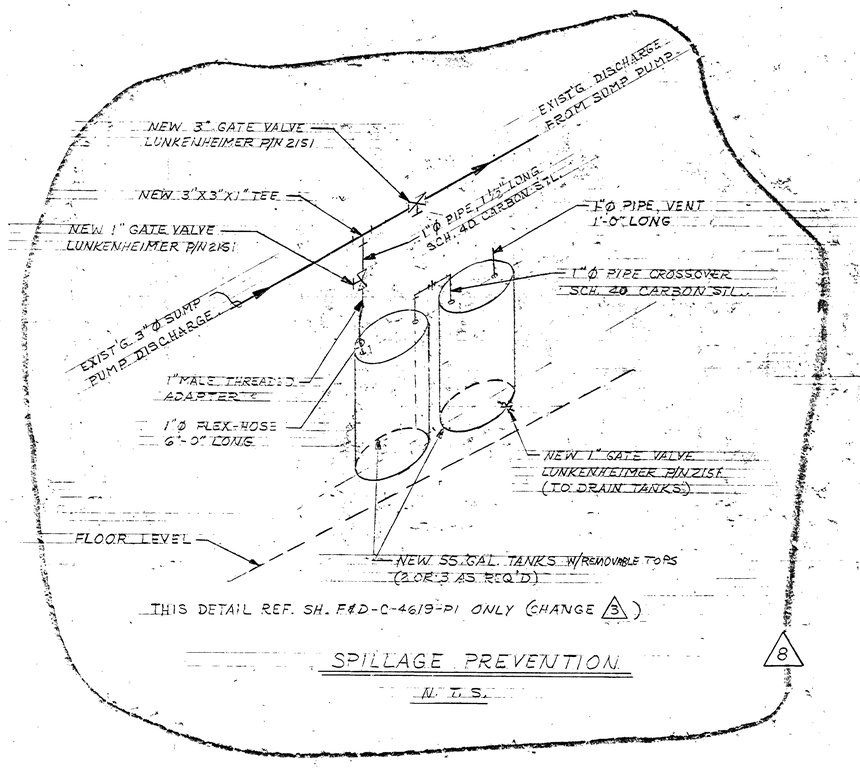

THIS DETAIL REF. SH. F&D-C-4619-P1 ONLY (CHANGE 3)

SPILLAGE PREVENTION

N. T. S.

8

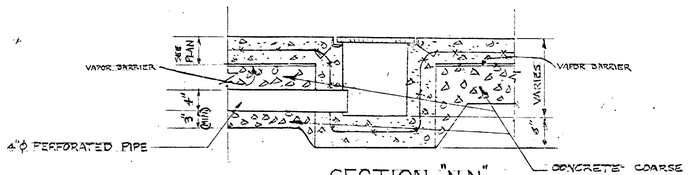

SECTION "N-N"
SCALE 1"=1'-0"

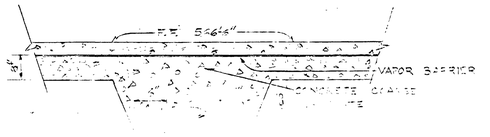

SECTION "J-J"
N.T.S.

REV.	BY	CONCURRENCE					
DATE	12-6-62	DATE		DATE		DATE	
	CS2		A341		ASOIM		ABSI

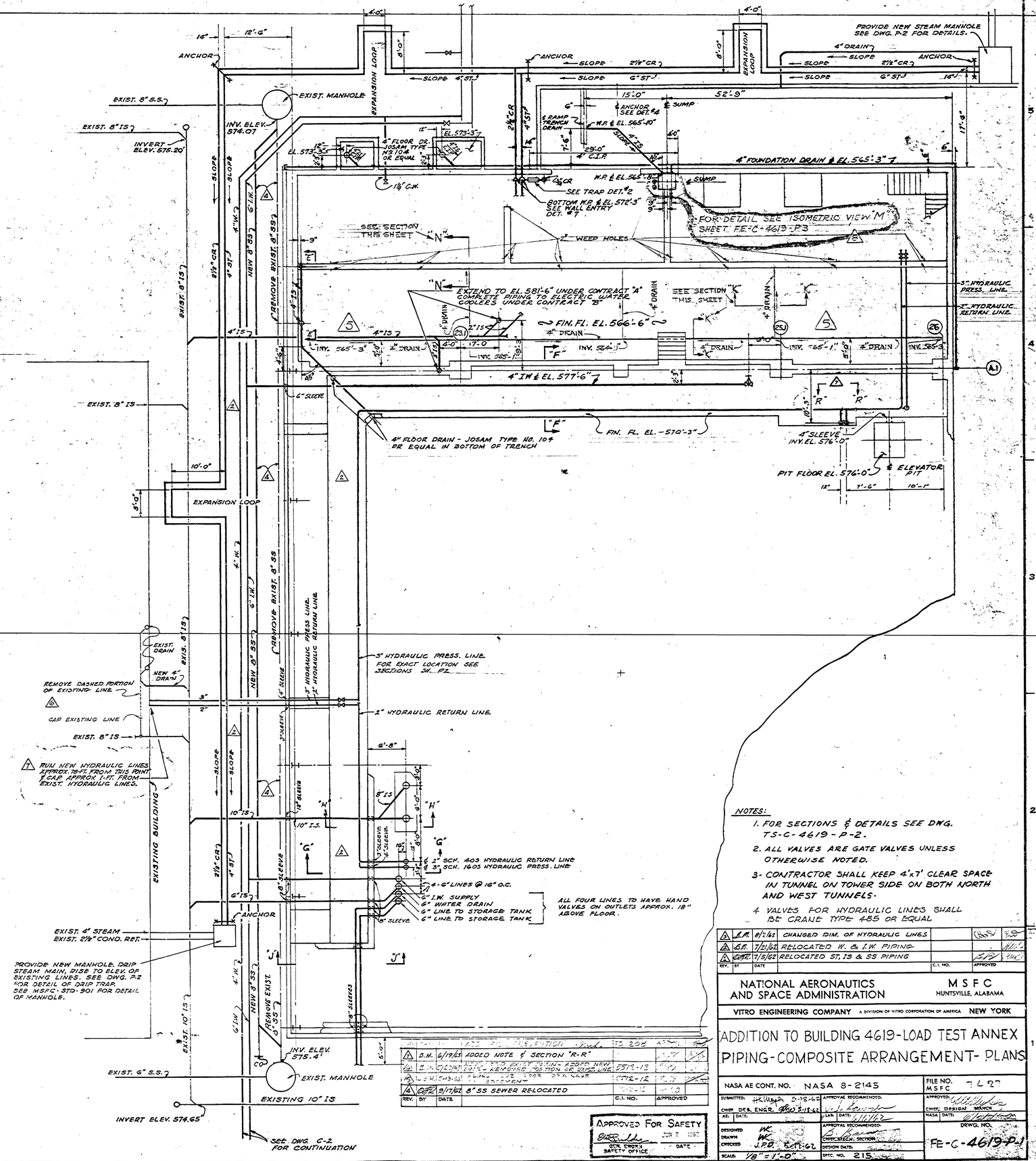

NOTES:

1. FOR SECTIONS & DETAILS SEE DWG. TS-C-4619-P-2.
2. ALL VALVES ARE GATE VALVES UNLESS OTHERWISE NOTED.
3. CONTRACTOR SHALL KEEP 4'x7' CLEAR SPACE IN TUNNEL ON TOWER SIDE ON BOTH NORTH AND WEST TUNNELS.
4. VALVES FOR HYDRAULIC LINES SHALL BE CRANE TYPE 455 OR EQUAL

REV.	BY	DATE		C.I. NO.	APPROVED
5	S.M.	8/2/62	CHANGED DIM. OF HYDRAULIC LINES		
4	S.M.	7/2/62	RELOCATED W. & I.W. PIPING		
3	CWF	7/5/62	RELOCATED ST, IS & SS PIPING		
2	S.M.	6/19/62	ADDED NOTE & SECTION "R-R"		
1	S.M.	5/21/62	ADDED NOTE & REVISED LOCATION OF EXIST. LINE	5512-13	
0	S.M.	3/13/62	ADDED NOTE & REVISED LOCATION OF EXIST. LINE	5512-12	
0	CWF	3/7/62	8" SS SEWER RELOCATED	5512-12	

APPROVED FOR SAFETY
JUN 7 1963
GOV. EMPLOY. SAFETY OFFICE
DATE

NATIONAL AERONAUTICS AND SPACE ADMINISTRATION — M S F C HUNTSVILLE, ALABAMA

VITRO ENGINEERING COMPANY A DIVISION OF VITRO CORPORATION OF AMERICA NEW YORK

ADDITION TO BUILDING 4619-LOAD TEST ANNEX PIPING-COMPOSITE ARRANGEMENT- PLANS

NASA AE CONT. NO.	NASA 8-2145	FILE NO. M S F C	7627
SUBMITTED: CHIEF, DES. ENGR.	5-18-62	APPROVAL RECOMMENDED: CHIEF, DESIGN BRANCH	
AE: DATE:		NASA: DATE:	
DESIGNED: WC		APPROVAL RECOMMENDED: CHIEF, MECH. SECTION	
DRAWN: WC		DESIGN DATE:	
CHECKED: J.R.B.	5-11-62	SPEC. NO. 215	
SCALE: 1/8" = 1'-0"		DRWG. NO.	FE-C-4619-P-1

MSFC MASTER BID DISK 11 18 2013

MSFC-FORM 232 (REV. DEC. 1960)

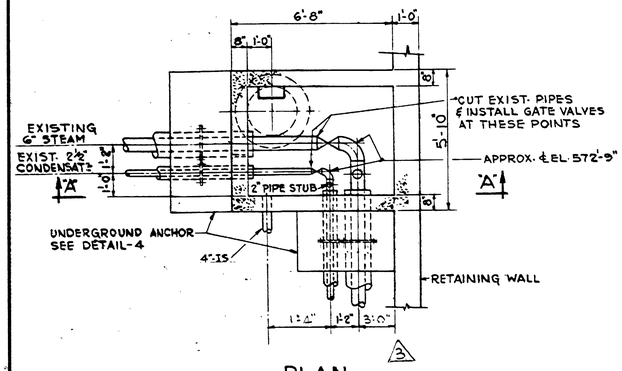

PLAN

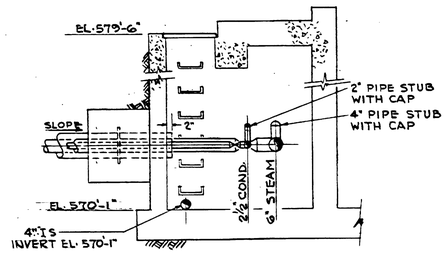

SECTION "A-A"

STEAM MANHOLE
DETAIL # 1
SCALE: ⅜" = 1'-0"

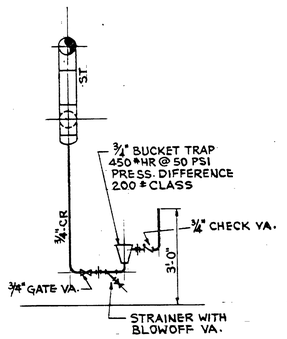

DETAIL # 2
NO SCALE

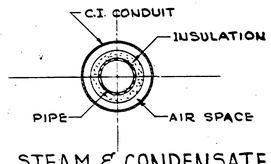

STEAM & CONDENSATE LINE (UNDERGROUND)
DETAIL # 3
NO SCALE

CONTRACT A, CONTRACT B

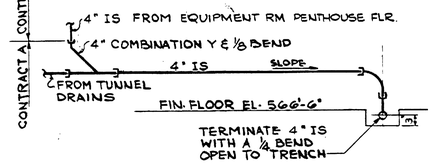

SECTION "E-E"
NO SCALE

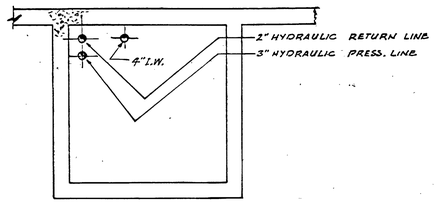

⚠⚠ SECTION "F-F"
NO SCALE

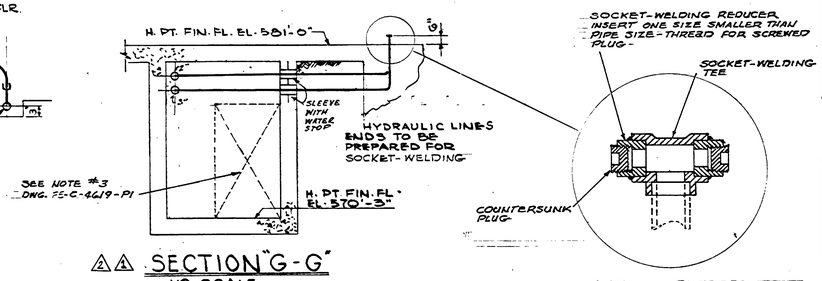

⚠⚠ SECTION "G-G"
NO SCALE

DETAIL - PLUGGED TEE
TYP. BOTH 2" & 3" HYDRAULIC LINES
NO SCALE

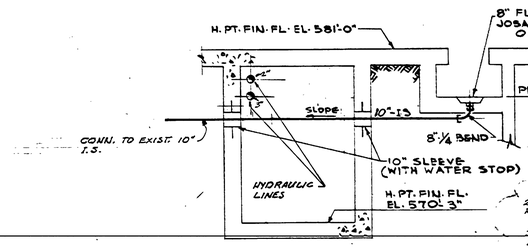

⚠⚠ SECTION "H-H"
NO SCALE

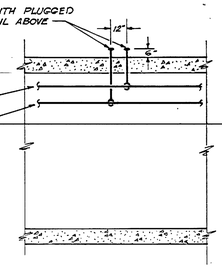

SECTION "R-R"
NO SCALE

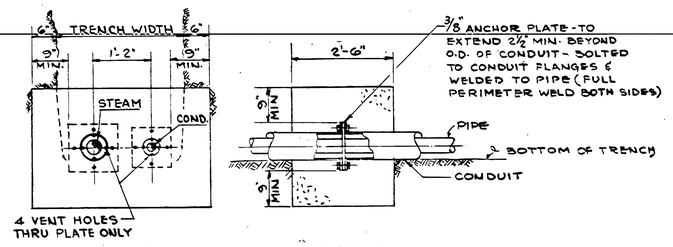

ELEVATION SECTION

TYPICAL ANCHOR FOR STEAM & CONDENSATE LINES (UNDERGROUND)
DETAIL # 4
NO SCALE

NOTE:
1- FOR SECTION & DETAIL LOCATIONS SEE DWGS. FE-C-4619-P-1 AND FE-C-4619-C-2.
2- FOR GENERAL NOTES SEE DWG. FE-C-4619-P-1

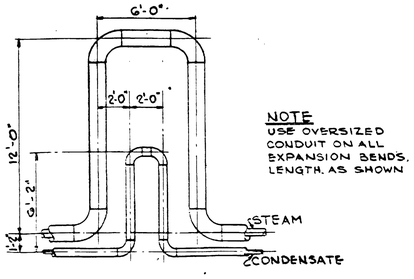

NOTE
USE OVERSIZED CONDUIT ON ALL EXPANSION BENDS. LENGTH AS SHOWN

EXPANSION LOOP
COLD SPRING STEAM LINE 1·95"
COLD SPRING CONDENSATE 1·0"

DETAIL # 5 FOR EXISTING STEAM & RETURN.
NO SCALE

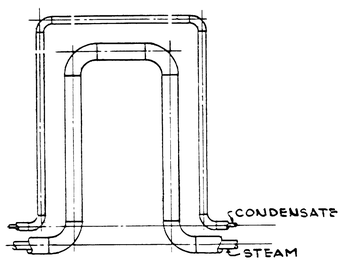

EXPANSION LOOP
COLD SPRING STEAM LINE 1·95"
COLD SPRING CONDENSATE 1·0"

DETAIL # 6 FOR NEW STEAM SUPPLY & RETURN - FOR DIMENSIONS SEE DWG. P-1
NO SCALE

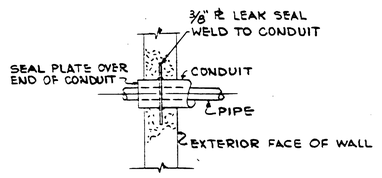

TYPICAL ST'M. & COND. WALL ENTRY
DETAIL # 7
NO SCALE

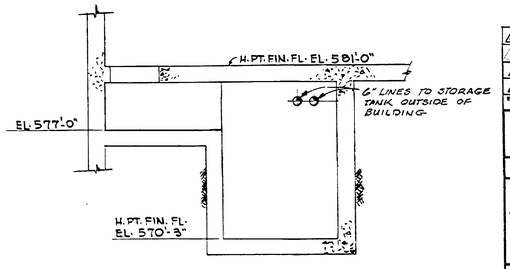

⚠⚠ SECTION "J-J"
NO SCALE

APPROVED FOR SAFETY
JUN 7 1962
NEW ENGLAND SAFETY OFFICE DATE

REV.	BY	DATE		C.I. NO.	APPROVED
⚠	B.M.	6/19/63	ADDED SECTION "RR"		
⚠	N.S.	9/13/62	DWG. REVISED - STEAM MANHOLE PLAN FOR #1		
⚠	B.M.	7/31/62	RELOCATED H. & I.W. PIPING		
⚠	GMR	7/5/62	RELOCATED ST, IS & SS PIPING		

NATIONAL AERONAUTICS AND SPACE ADMINISTRATION — M S F C HUNTSVILLE ALABAMA

VITRO ENGINEERING COMPANY A DIVISION OF VITRO CORPORATION OF AMERICA — NEW YORK

ADDITION TO BUILDING 4619-LOAD TEST ANNEX PIPING-MISC. PLANS, SECTIONS & DETAILS

NASA AE CONT. NO. NASA 8-2145	FILE NO.: M S F C -428
SUBMITTED: [signature] 3-18-62	APPROVED: [signature]
CHIEF, DES. ENG'G. [signature] 5-9-62	CHIEF, DESIGN BRANCH
A.E. DATE:	NASA DIR. DATE: 5/21/62
DESIGNED WK	APPROVAL RECOMMENDED:
DRAWN E.J.B.	CHIEF, MECH. SECTION
CHECKED J.P.D. 5-17-62	DESIGN DATE:
SCALE: AS NOTED	SPEC. NO. 215

DWG. NO. FE-C-4619-P-2

MSFC MASTER BID DISK 11-18-2013

MSFC-FORM 232 (REV. DEC. 1960)

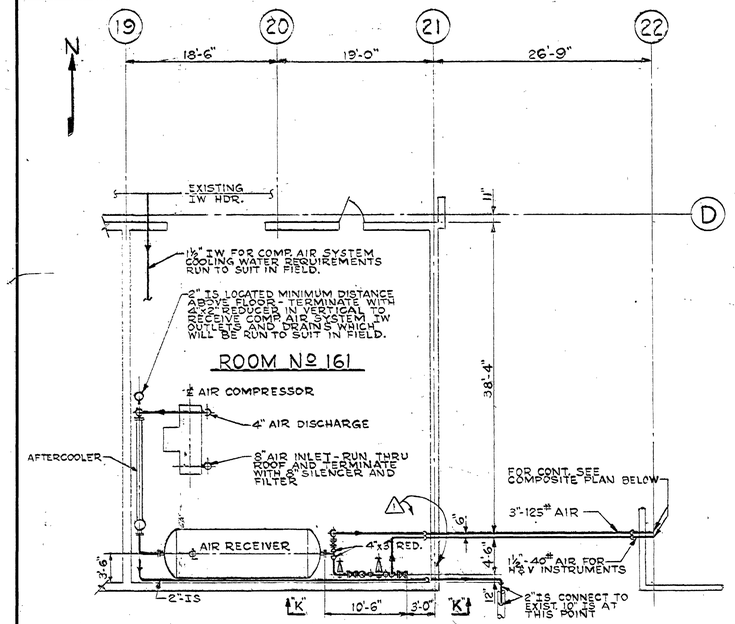

AIR COMPRESSOR ROOM - PLAN

BLDG. 4619
SCALE: ⅛"=1'-0"

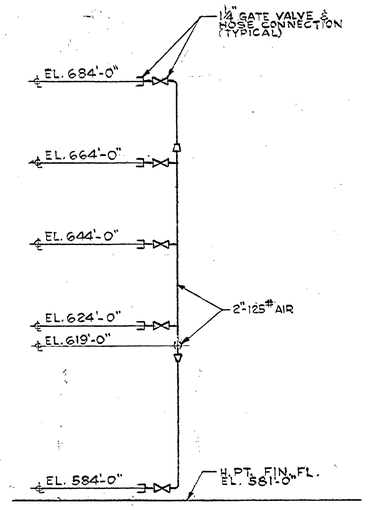

SECTION "L-L"

SCALE: NONE

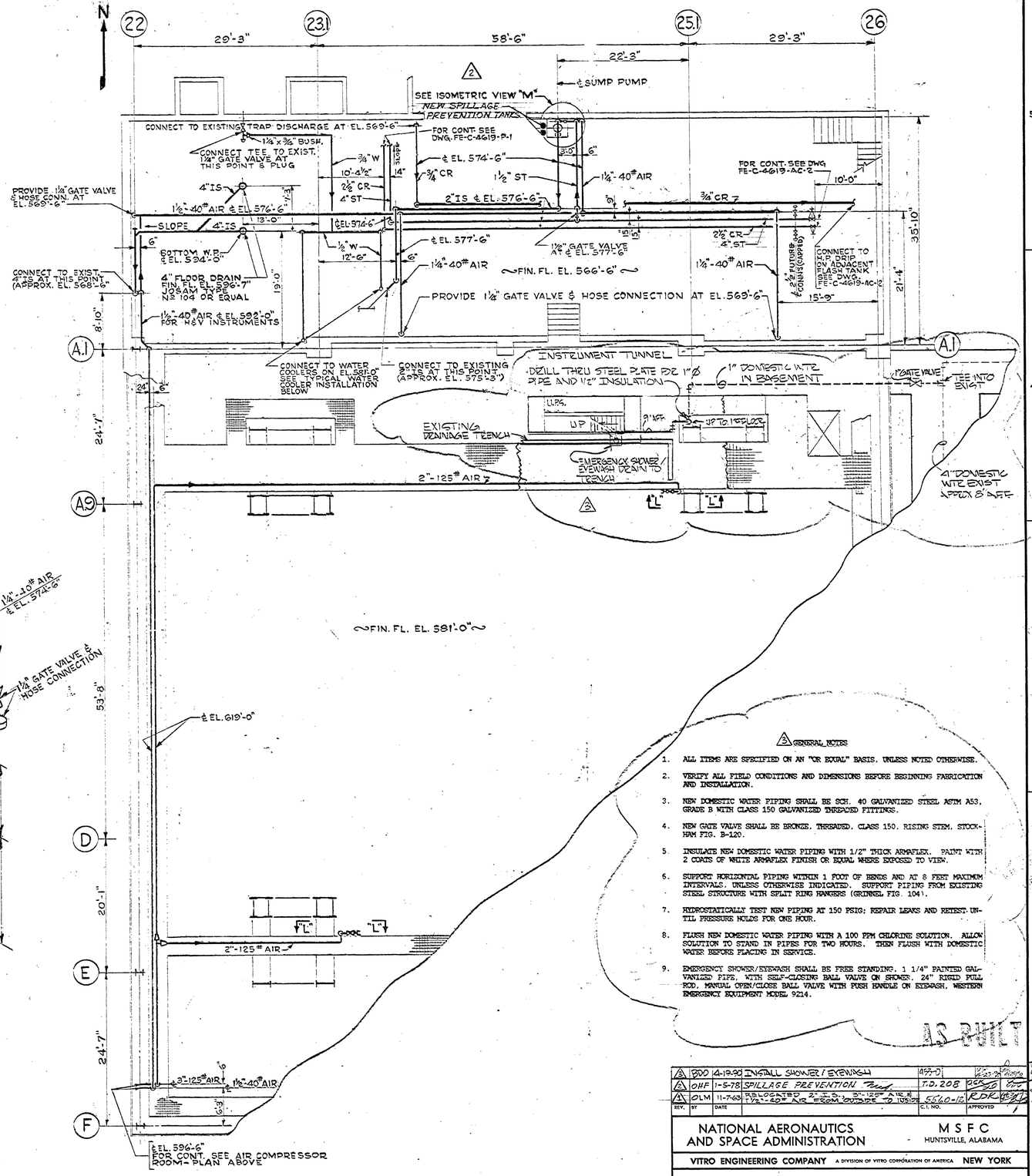

COMPOSITE PLAN

BLDG. 4619 ANNEX
SCALE: ⅛"=1'-0"

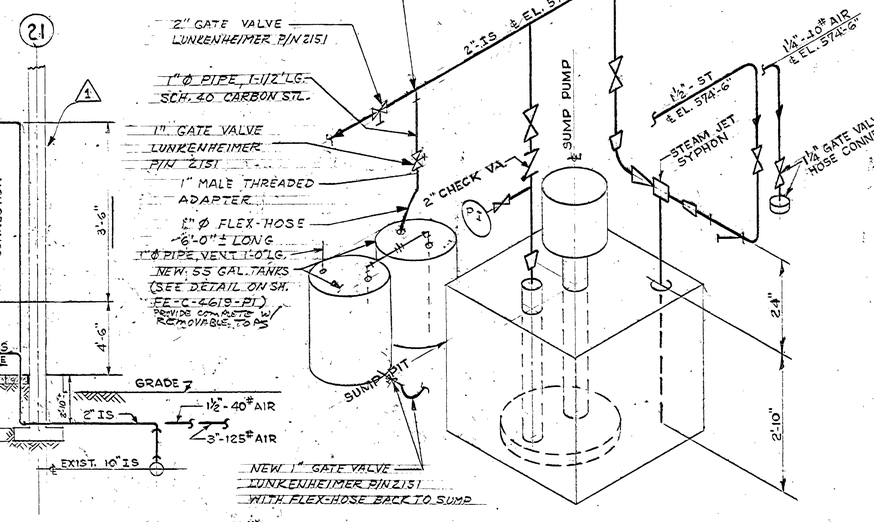

SECTION "K-K"

SCALE: ¼"=1'-0"

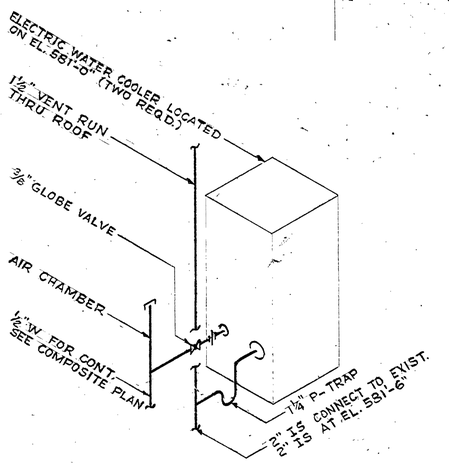

TYPICAL WATER COOLER INSTALLATION

SCALE: NONE

REV. 2 CONCURRENCE									
DATE		DATE		DATE		DATE		DATE	
1/17/78	CS21	1/16/78	AB41	1-23-78	MSOIM	1/23/78	ABS1	5-17-78	EAR

ISOMETRIC VIEW "M"

SCALE: NONE

③ GENERAL NOTES

1. ALL ITEMS ARE SPECIFIED ON AN "OR EQUAL" BASIS, UNLESS NOTED OTHERWISE.
2. VERIFY ALL FIELD CONDITIONS AND DIMENSIONS BEFORE BEGINNING FABRICATION AND INSTALLATION.
3. NEW DOMESTIC WATER PIPING SHALL BE SCH. 40 GALVANIZED STEEL ASTM A53, GRADE B WITH CLASS 150 GALVANIZED THREADED FITTINGS.
4. NEW GATE VALVE SHALL BE BRONZE, THREADED, CLASS 150, RISING STEM, STOCKHAM FIG. B-120.
5. INSULATE NEW DOMESTIC WATER PIPING WITH 1/2" THICK ARMAFLEX. PAINT WITH 2 COATS OF WHITE ARMAFLEX FINISH OR EQUAL WHERE EXPOSED TO VIEW.
6. SUPPORT HORIZONTAL PIPING WITHIN 1 FOOT OF BENDS AND AT 8 FEET MAXIMUM INTERVALS, UNLESS OTHERWISE INDICATED. SUPPORT PIPING FROM EXISTING STEEL STRUCTURE WITH SPLIT RING HANGERS (GRINNEL FIG. 104).
7. HYDROSTATICALLY TEST NEW PIPING AT 150 PSIG; REPAIR LEAKS AND RETEST UNTIL PRESSURE HOLDS FOR ONE HOUR.
8. FLUSH NEW DOMESTIC WATER PIPING WITH A 100 PPM CHLORINE SOLUTION. ALLOW SOLUTION TO STAND IN PIPES FOR TWO HOURS. THEN FLUSH WITH DOMESTIC WATER BEFORE PLACING IN SERVICE.
9. EMERGENCY SHOWER/EYEWASH SHALL BE FREE STANDING. 1 1/4" PAINTED GALVANIZED PIPE, WITH SELF-CLOSING BALL VALVE ON SHOWER. 24" RIGID PULL ROD. MANUAL OPEN/CLOSE BALL VALVE WITH PUSH HANDLE ON EYEWASH, WESTERN EMERGENCY EQUIPMENT MODEL 9214.

AS BUILT

REV.	BY	DATE		C.I. NO.	APPROVED
④	BDO	4-19-90	INSTALL SHOWER / EYEWASH	497-0	
③	OHF	1-5-78	SPILLAGE PREVENTION	T.D. 208	
②	OLM	11-7-63	RELOCATED 2" I.S., 3"-125# AIR & 1½"-40# AIR FROM OUTSIDE TO INSIDE	5560-12	RDK

NATIONAL AERONAUTICS AND SPACE ADMINISTRATION — M S F C, HUNTSVILLE, ALABAMA

VITRO ENGINEERING COMPANY A DIVISION OF VITRO CORPORATION OF AMERICA NEW YORK

ADDITION TO BUILDING 4619-LOAD TEST ANNEX PIPING ARRANGEMENT-PLANS & SECTS.

NASA AE CONT. NO. NASA-8-2145 — FILE NO. MSFC 7429

SUBMITTED: CHIEF, DES. ENGR.	APPROVAL RECOMMENDED: LAB	APPROVED: CHIEF, ENGINEERING BRANCH	
AE: DATE: Sept. 14, 1962	DATE: 10-27-62	NASA DATE: 10-25-62	
DESIGNED WK DRAWN WK CHECKED 9-10-62	APPROVAL RECOMMENDED: CHIEF, DESIGN SECTION	DESIGN DATE: Oct 24, 1962	DRWG. NO. FE-C-4619-P-3
SCALE: AS NOTED	SPEC. NO. FE-7-363		

APPROVED FOR SAFETY — OCT 29 1962 — DATE — SAFETY OFFICE

MSFC MASTER BID DISK 11-15-2013

MSFC-FORM 232 (REV. DEC., 1960)

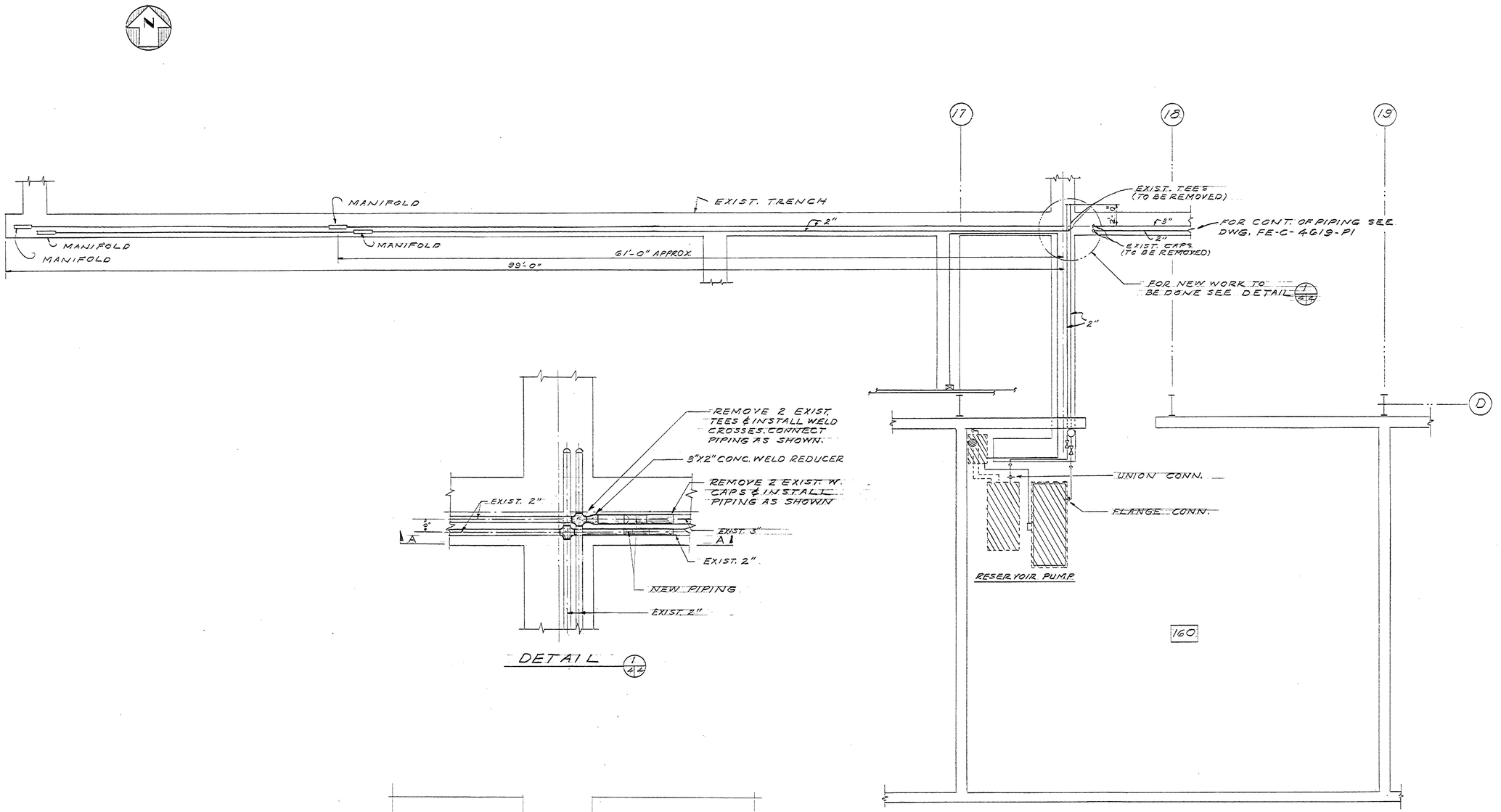

PLAN OF EXIST. BUILDING 4619
SCALE: 1/2"=1'-0"

DETAIL 1/A2

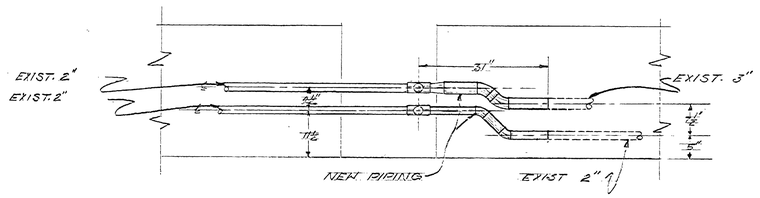

SECTION "A-A"
SCALE: 1/2"=1'-0"

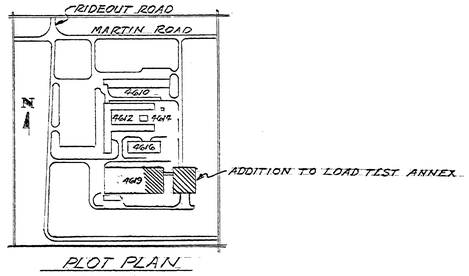

PLOT PLAN
SCALE: 1"=400'

AS BUILT

REV.	BY	DATE		C.I. NO.	APPROVED

NATIONAL AERONAUTICS AND SPACE ADMINISTRATION — M S F C, HUNTSVILLE, ALABAMA

ADDITION TO BUILDING 4619-LOAD TEST ANNEX
HYDRAULIC PIPING SYSTEM

NASA AE CONT. NO.		FILE NO. MSFC 7430
SUBMITTED: CHIEF	APPROVAL RECOMMENDED:	APPROVED: CHIEF, DIVISION / BRANCH
AE: DATE:	LAB. DATE 11-17-63	NASA DATE: 10-18-63
DESIGNED: DRAWN T. HILL CHECKED	APPROVAL RECOMMENDED: CHIEF, SECTION / DIVISION	DRWG. NO. FE-C-4619-P4
SCALE: AS NOTED	DESIGN DATE:	
	SPEC. NO. FE-D-303	

61 STEP-11

MSFC MASTER BID DISK 11-18-2013

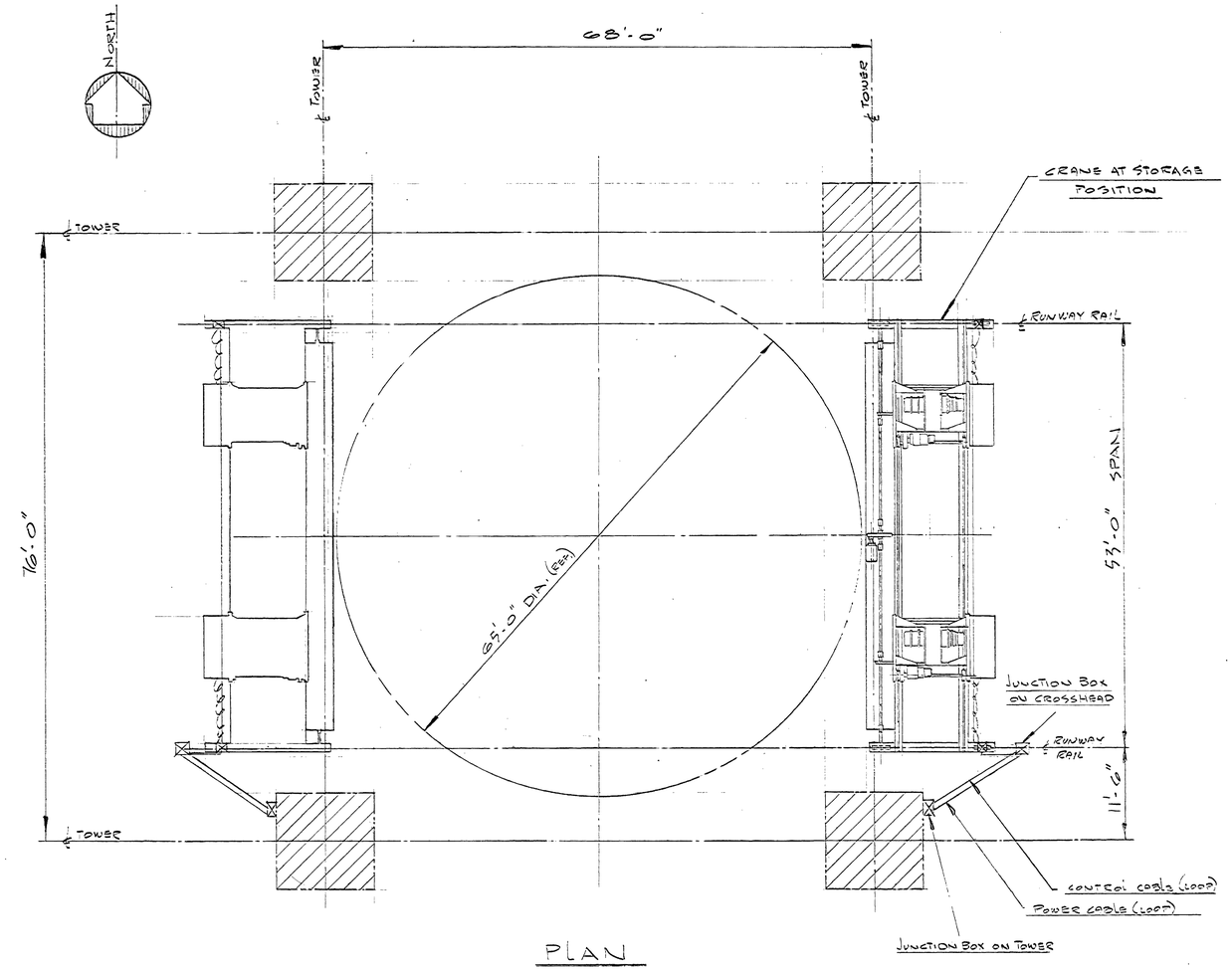

PLAN

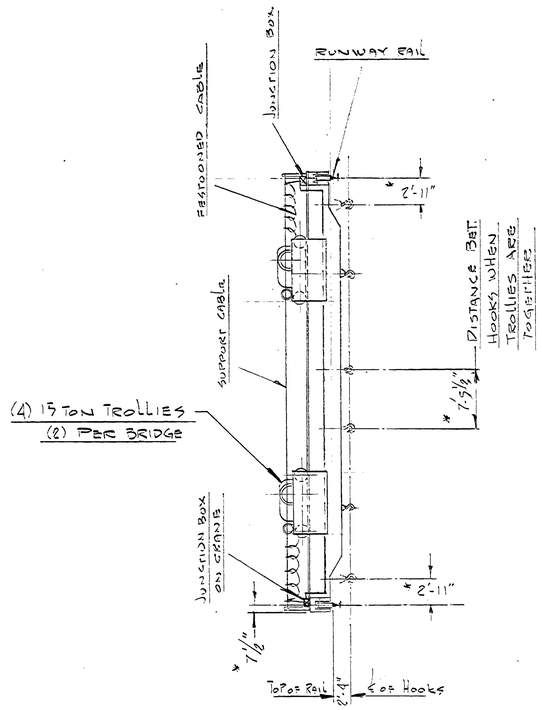

NOTE:
ALL DIMENSIONS MARKED * SHALL BE VERIFIED BY VENDOR

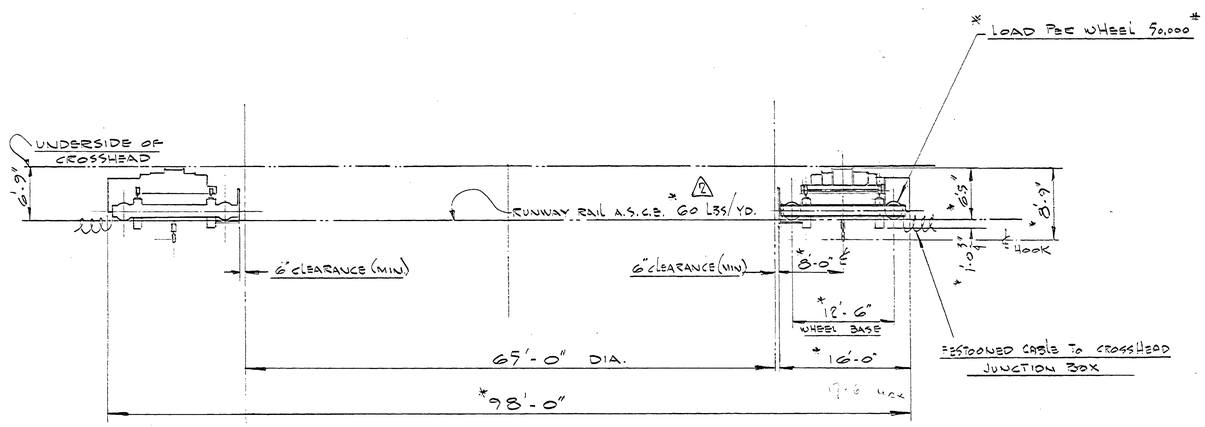

REFERENCE DRAWINGS

FE-C-4619-S-1 TEST TOWER-CROSSHEAD FRAMING PLAN & SCHEDULE

FE-C-4619-E-9 ELECTRICAL SCHEMATIC DIAGRAMS

APPROVED FOR SAFETY
Edward Thorpe OCT 20 1962
REAL SAFETY OFFICER DATE

AS BUILT

REV.	BY	DATE		C.I. NO.	APPROVED
2	WOS	12-7-62	REVISED RUNWAY RAIL FROM 80'-0" TO 68'-0"	AMEND 1	
1	GES	11-1-62	REISSUED FOR PACKAGE "B"	-	GES

NATIONAL AERONAUTICS AND SPACE ADMINISTRATION — M S F C, HUNTSVILLE, ALABAMA

VITRO ENGINEERING COMPANY A DIVISION OF VITRO CORPORATION OF AMERICA NEW YORK

ADDITION TO BUILDING 4619-LOAD TEST ANNEX
BRIDGE CRANES
CLEARANCES & COVERAGE

NASA AE CONT. NO. NASA 8-2145		FILE NO. M S F C	7414
SUBMITTED: CHIEF AE:	DATE: 8-10-62	APPROVAL RECOMMENDED:	APPROVED: CHIEF, ENGINEERING BRANCH
		LAYOUT:	NASA DATE: 10-22-62
DESIGNED: E.P. DRAWN: J.P.W. CHECKED:		APPROVAL RECOMMENDED: CHIEF, DESIGN SECTION	DRWG. NO. FE-C-4619-M-1
SCALE: 1/8" = 1'-0"		DESIGN DATE: 10-24-62	SPEC. NO. FE-D-303

MSFC MASTER BID DISK 11-18-2013

OSCILLOSE PRESS, INC., BROOKLYN 31, N.Y. STOCK NO. 449

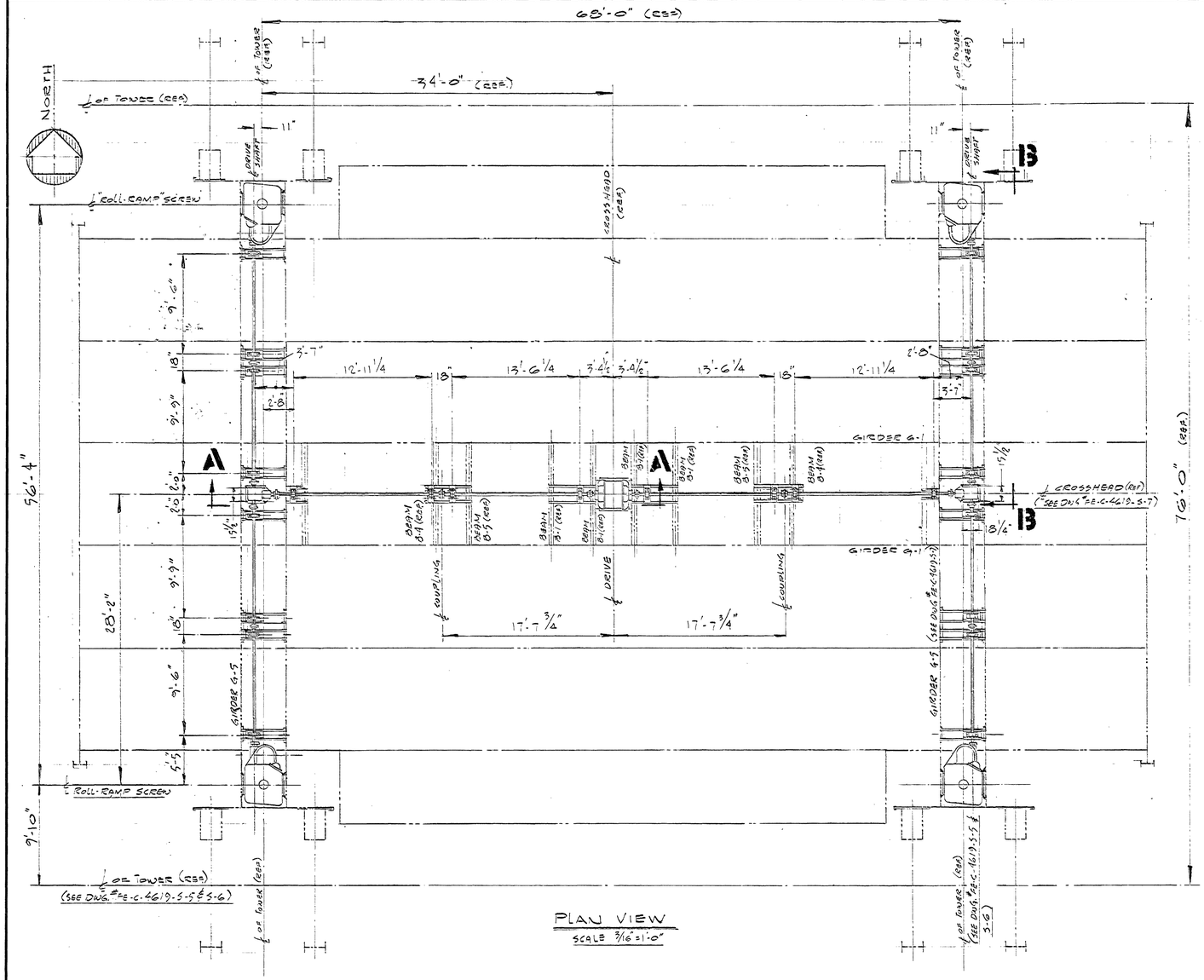

PLAN VIEW

SCALE 3/16"=1'-0"

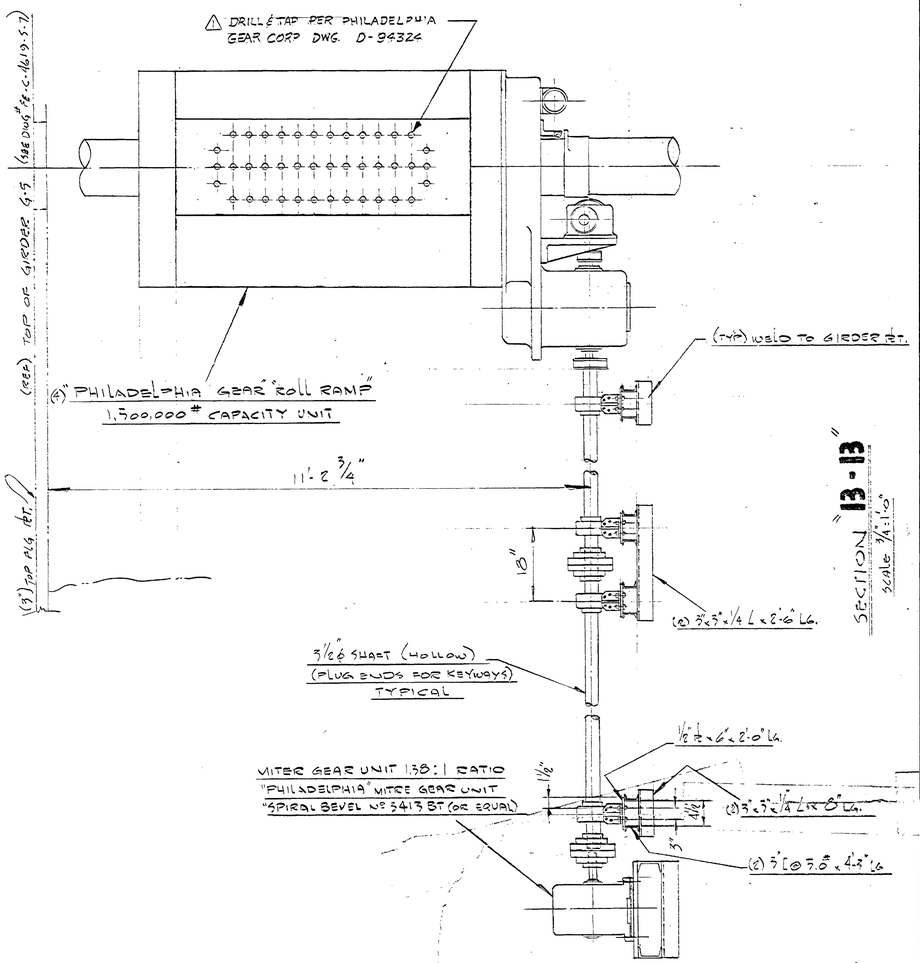

SECTION "13-13"

SCALE 3/4"=1'-0"

NOTE:
EXACT DIMENSIONS, WHERE RELATED TO EQUIPMENT, SHALL BE VERIFIED FROM VENDOR DRAWINGS.

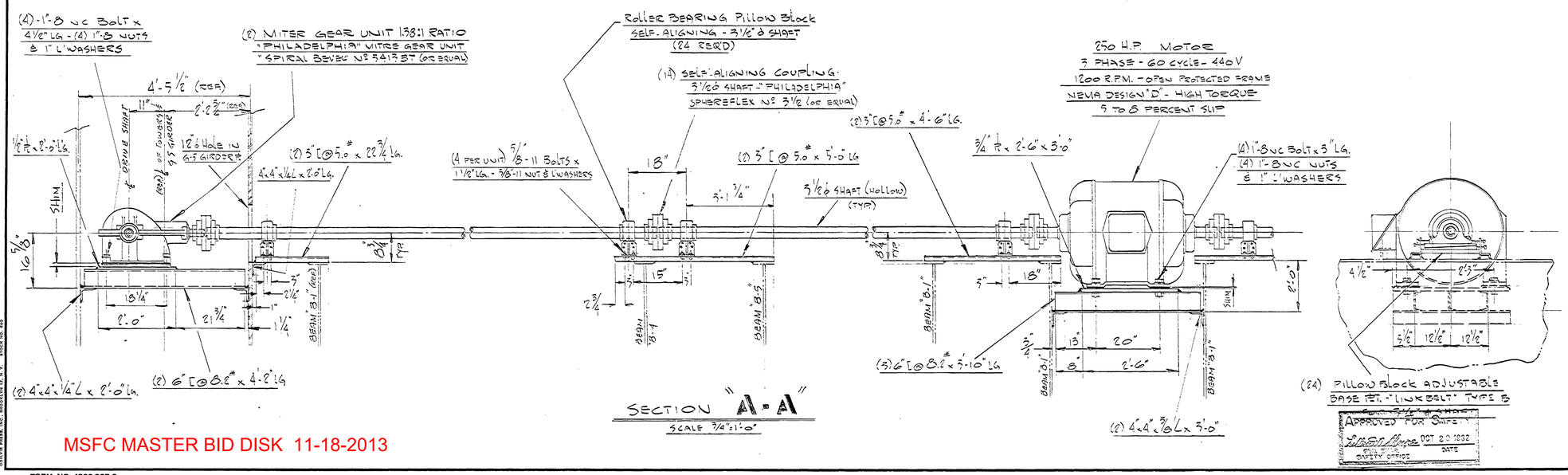

SECTION "A-A"

SCALE 3/4"=1'-0"

(24) PILLOW BLOCK ADJUSTABLE BASE ET. - "LINK BELT" TYPE B

APPROVED FOR SHIPMENT
Gilbert Boyce OCT 20 1962
SAFETY OFFICE DATE

AS BUILT

REV.	BY	DATE		C.I. NO.	APPROVED
⚠	WLB	1-6-66	REVISED HOLE LAYOUT	5560-16	

NATIONAL AERONAUTICS AND SPACE ADMINISTRATION — M S F C — HUNTSVILLE, ALABAMA

VITRO ENGINEERING COMPANY A DIVISION OF VITRO CORPORATION OF AMERICA NEW YORK

ADDITION TO BUILDING 4619-LOAD TEST ANNEX

CROSSHEAD JACKING MECHANISM

NASA AE CONT. NO. NASA 8-2145		FILE NO. MSFC 7415	
SUBMITTED: CHIEF / AE.	APPROVAL RECOMMENDED: DATE: 8-10-62	APPROVED: CHIEF, ENGINEERING BRANCH	
	LAB / DATE: 10-22-62	NASA / DATE: 10-25-62	
DESIGNED: E.P. DRAWN: S. PIGNATA CHECKED	APPROVAL RECOMMENDED: CHIEF, DESIGN SECTION	DRWG. NO.	
SCALE: AS NOTED	DESIGN DATE: OCT. 1962	FE-C-4619-M-2	
	SPEC. NO. PED-303		

MSFC MASTER BID DISK 11-18-2013

FORM NO. 1000.805-0
OSCAR FREED, INC., BROOKLYN 17, N.Y. STOCK NO. 460

FORM No. 1000.807-0

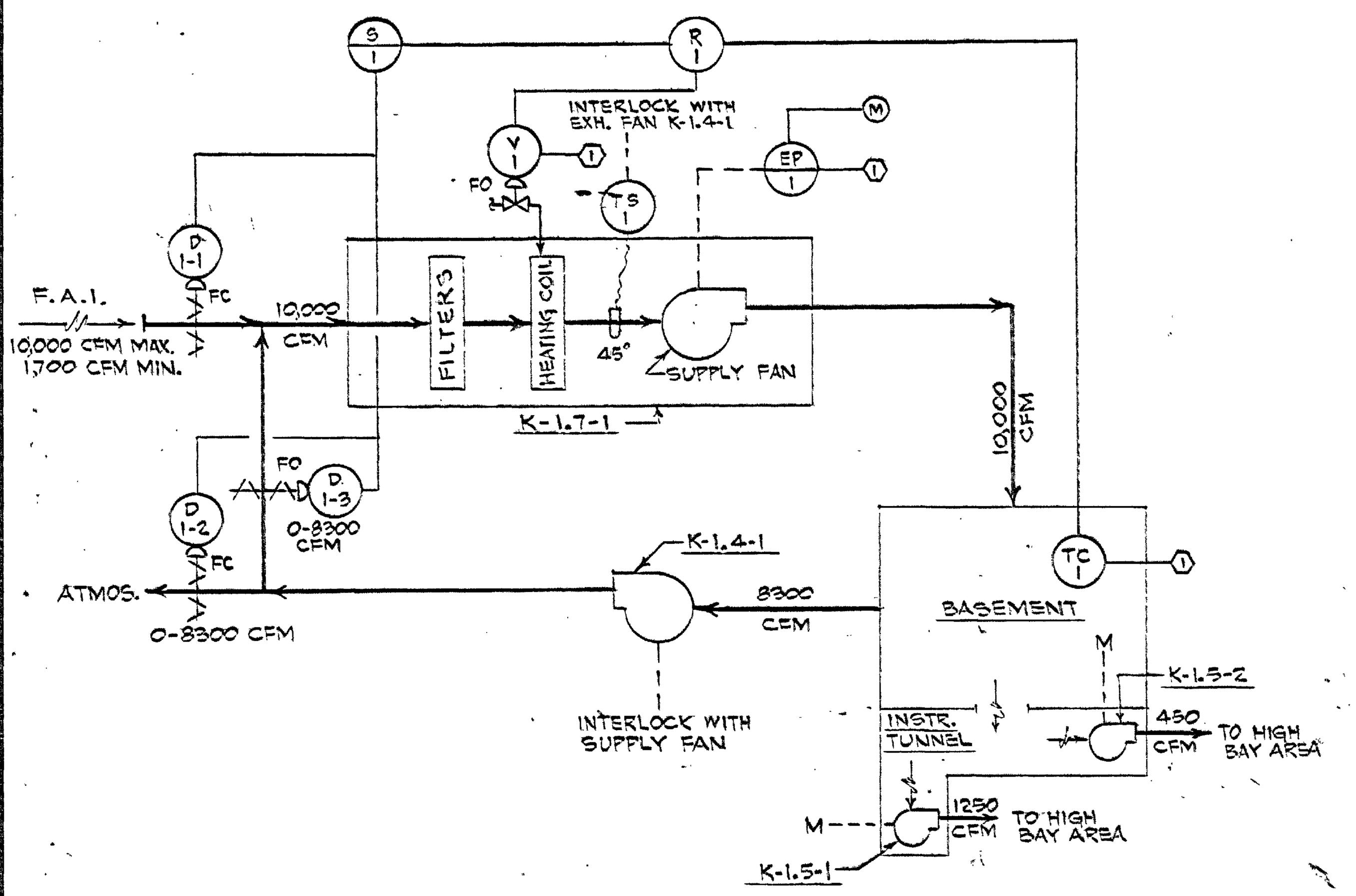

SYSTEM K-1 - BASEMENT & INSTRUMENTATION TUNNEL

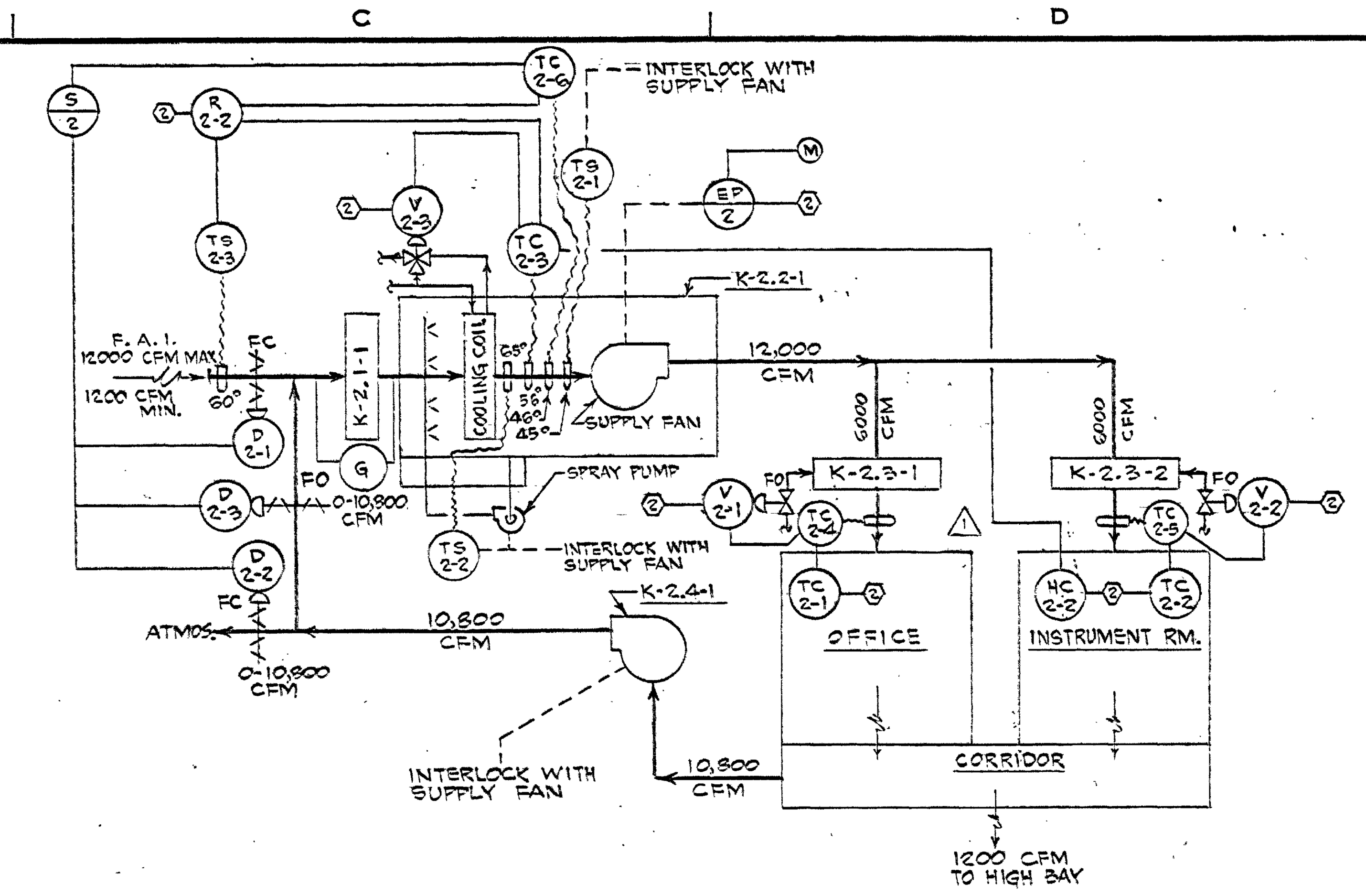

SYSTEM K-2 OFFICE & INSTRUMENT RM

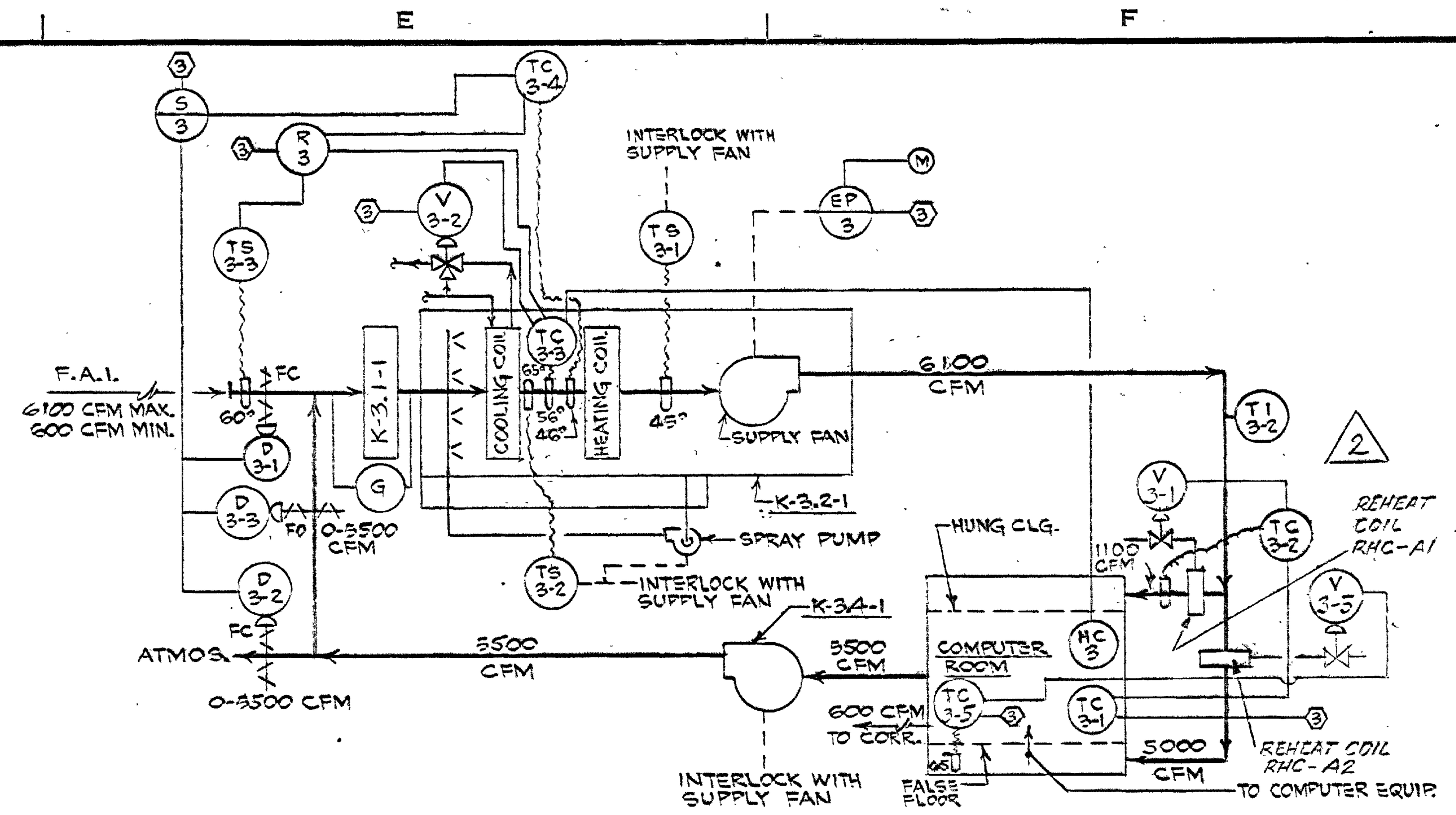

SYSTEM K-3 COMPUTER

SEQUENCE OF OPERATION

SYSTEM K-1 BASEMENT & INSTRUMENTATION TUNNEL

On manual start-up of fan K-1.4-1, an electrical interlock shall start supply fan K-1.7-1 which shall energize the control system through electric pneumatic switch EP-1. Space thermostat TC-1 shall modulate through relay R-1, dampers D-1-1, D-1-2 and D-1-3 to maintain setting. On drop in temperature, D-1-1 and D-1-2 will modulate close to minimums set on S-1 and D-1-3 will modulate open. On further drop in temperature, normally open steam valve V-1 will modulate open.

If air temperature through the unit should drop below 45°F. thermostat TS-1 will shut down exhaust fan K-1.4-1.

When fans K-1.4-1 and K-1.7-1 are stopped, dampers D-1-1 and D-1-2 shall be in a normally closed position and D-1-3 shall be normally open.

SYSTEM K-2 OFFICE & INSTRUMENT ROOM

On manual start-up of supply fan K-2.2-1, electric pneumatic switch EP-2 shall energize the control system. Return air fan K-2.4-1 and the spray pump shall be electrically interlocked to start with supply fan K-2.2-1. Space thermostats TC-2-1 and TC-2-2 shall reset duct thermostats TC-2-4 and TC-2-5 respectively to maintain space conditions. TC-2-4 and TC-2-5 shall modulate steam valves V-2-1 and V-2-2 respectively.

Room humidistats ~~HC-2-1 and~~ HC-2-2 ~~through relay R-2-1~~ shall reset dewpoint controller TC-2-3 set at 56° to maintain relative humidity in the room.

When outside air temperature is below 60°, relay R-2-2 will permit thermostat TC-2-6 to modulate dampers D-2-1, D-2-2 and D-2-3 to maintain setting. On drop in temperature D-2-1 and D-2-2 will modulate close to minimums set on manual switch S-2 and damper D-2-3 will modulate open.

When outside air temperature is above 60°, relay R-2-2 will close dampers D-2-1 and D-2-2 to minimum positions, open damper D-2-3 to full open position and permit TC-2-3 to control cooling coil valve V-2-3.

If air temperature leaving cooling coil should rise to 65° due to lack of cooling, thermostat TS-2-2 will shut down supply fan K-2.2-1. A time delay relay of five minutes duration shall permit starting of unit.

If air temperature through the unit should drop below 45°, thermostat TS-2-1 will shut down supply fan K-2.2-1.

When supply fan K-2.2-1 is stopped, dampers D-2-1 and D-2-2 shall be in a normally closed position and D-2-3 shall be normally open.

SYSTEM K-3 COMPUTER ROOM

On manual start-up of supply fan K-3.2-1, electric pneumatic switch EP-3 shall energize the control system. Return air fan K-3.4-1 and the spray pump shall be electrically interlocked to start with supply fan K-3.2-1. Space thermostat TC-3-1 shall reset duct thermostat TC-3-2 to maintain space conditions. TC-3-2 shall modulate steam valve V-3-1.

Room humidistat HC-3 shall reset dewpoint controller TC-3-3 set at 56° to maintain relative humidity in the room.

When outside air temperature is below 60°, TC-3-4 shall modulate dampers D-3-1. D-3-2 and D-3-3 to maintain setting. On drop in temperature D-3-1 and D-3-2 will modulate close to minimums set on manual switch S-3 and damper D-3-3 will modulate open.

When outside air temperature is above 60o, relay R-3 will close dampers D-3-1 and D-3-2 to minimum positions, open damper D-3-3 to full open position and permit TC-3-3 to control cooling coil valve V-3-2.

If air temperature leaving cooling coil should rise to 65° due to lack of cooling, thermostat TS-3-3 will shut down supply fan K-3.2-1. A time delay relay of five minutes duration shall permit starting of unit.

If air temperature through the unit should drop below 45o thermostat TS-3-2 will shut down supply fan K-3.2-1.

When supply fan K-3.2-1 is stopped, dampers D-3-1 and D-3-2 shall be in a normally closed position and D-3-3 shall be normally open.

SYSTEM K-4 REFRIGERATION SYSTEM

Chilled water pump K-4.8-1 and condenser water pump K-4.8-2 are manually started. Compressor may be manually started only after chilled water flow switch FS-4-1 and condenser water flow switch FS-4-2 are activated. Cooling tower fan operation will be controlled by thermostat TC-4 to maintain condenser water temperature leaving the cooling tower. Cooling tower fan may operate only when flow switch FS-4-3 is activated.

In case of failure of chilled or condenser water, compressor will shut down.

SYSTEM K-5 FAN LOFT

When space temperature exceeds 80°F., room thermostat T-5 starts exhaust fans K-5.5-1 and K-5.5-2. Electric-pneumatic switch EP-5 is energized and dampers D-5-1, D-5-2, D-5-3, D-5-4 and D-5-5 open. When space temperature drops below 75°F. fans K-5.5-1 and K-5.5-2 stop and dampers D-5-1, D-5-2, D-5-3, D-5-4 and D-5-5 close.

SYSTEM K-6 THRU K-10 H&V UNITS (HIGH BAY)

On manual start-up of supply fan, electric pneumatic switch shall energize the control system. The wall thermostat shall reset the duct thermostat to maintain space conditions. The duct thermostat shall modulate the steam valve to the heating coil.

If the air temperature through the unit should drop below 45°, the temperature switch mounted inside the H&V unit will shut down the supply fan.

A master summer-winter switch MS-6 will position the fresh air and return air dampers. In the "summer" position, the fresh air damper will open full and the return air damper will close. In the "winter" position, the fresh air damper will open for 1/3 fresh air and the return air damper will open for 2/3 return air.

SYSTEM K-11 ROOF

When the master summer-winter switch MS-6 is in the "summer" position, roof ventilator dampers D-11-1 thru D-11-12 will open full.

When the master summer-winter switch MS-6 is in the "winter" position, static pressure regulator PC-11 will modulate dampers D-11-1 thru D-11-12 as indicated to prevent a pressure rise within the building.

If the pressure within the building rises above .1" W.G. static pressure regulator PC-11 will modulate open dampers D-11-1, D-11-3, D-11-5, D-11-7, D-11-9 and D-11-11 thru multiplying relay MR-1. If the pressure continues to rise, static pressure regulator PC-11 will modulate open dampers D-11-2, D-11-4, D-11-6, D-11-8, D-11-10 and D-11-12 thru multiplying relay MR-2.

UNIT HEATERS

All unit heaters will be controlled by an electric thermostat which will cycle the unit heater fan to satisfy the setting.

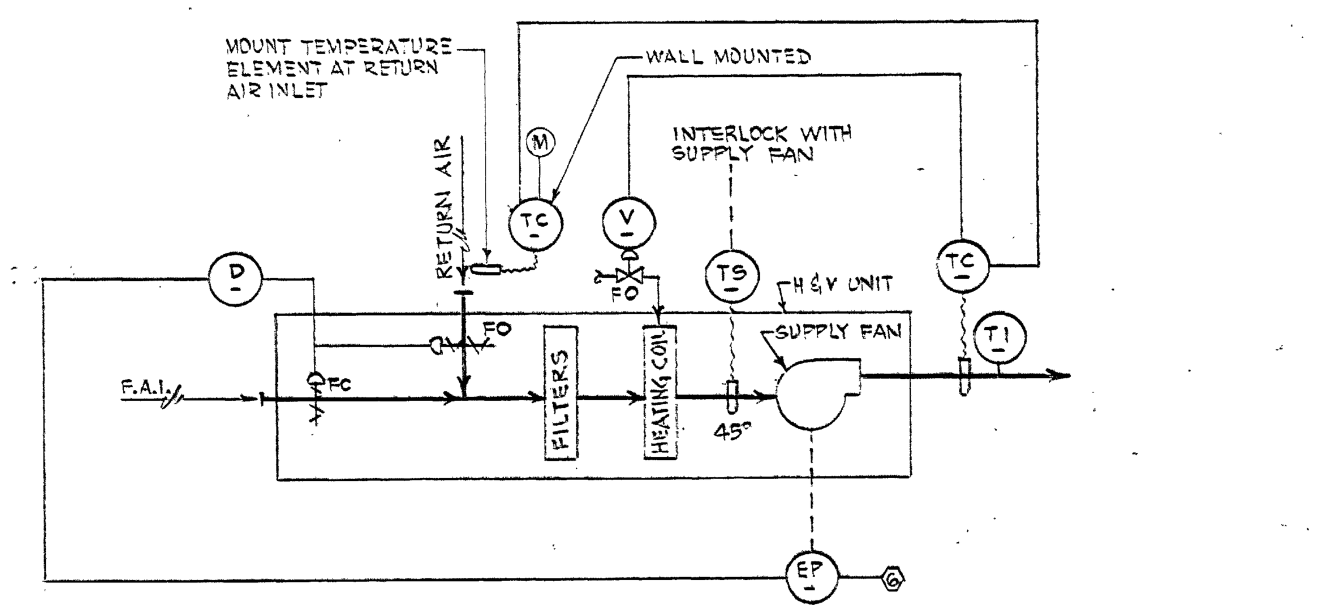

TYPICAL CONTROL FOR SYS. K-6 THRU SYS. K-10 H&V UNITS (HIGH BAY)

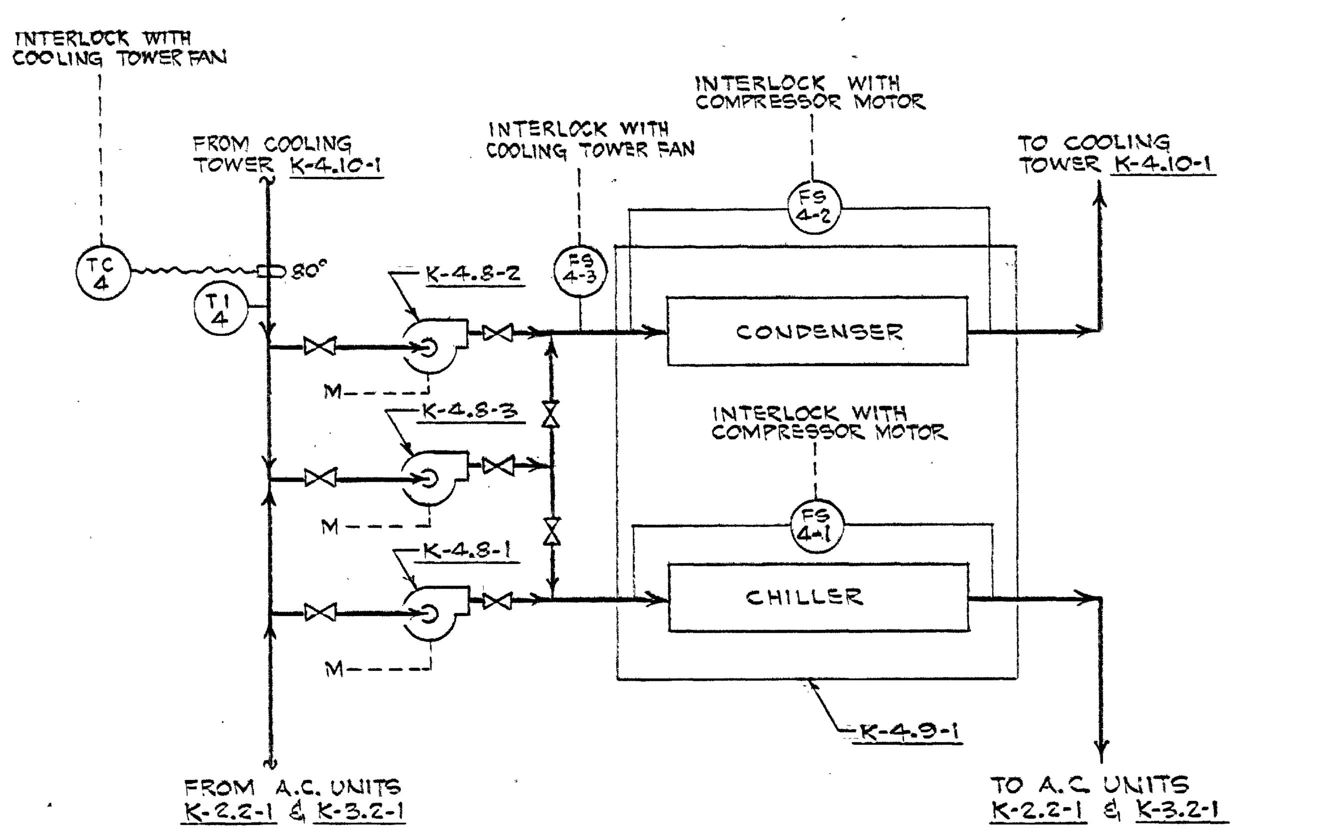

REFRIGERATION SYSTEM K-4

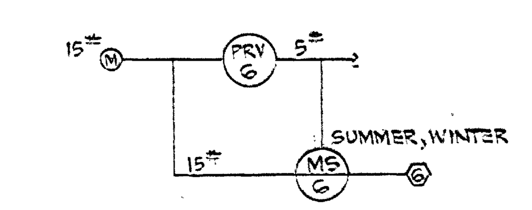

MASTER SWITCH FOR SYS. K-6 THRU SYS. K-10 H&V UNITS

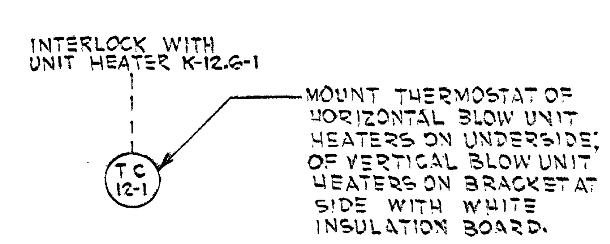

TYPICAL CONTROL FOR UNIT HEATERS

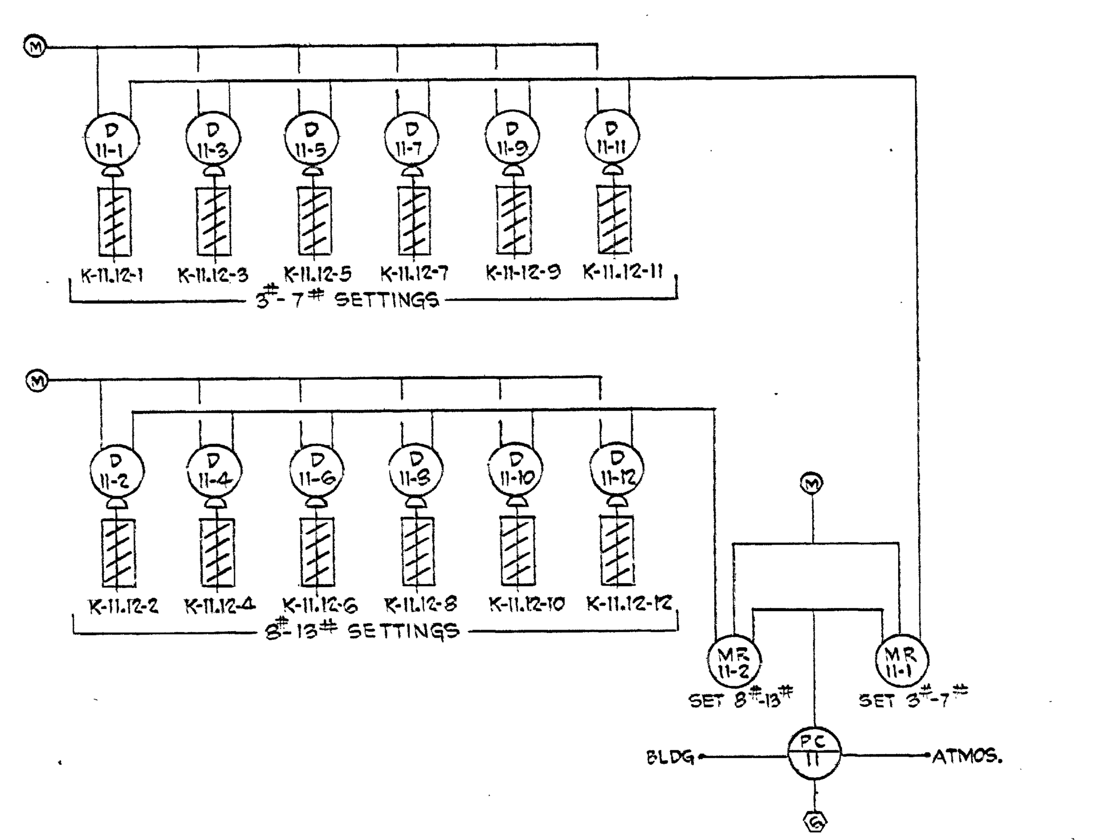

ROOF SYSTEM K-11

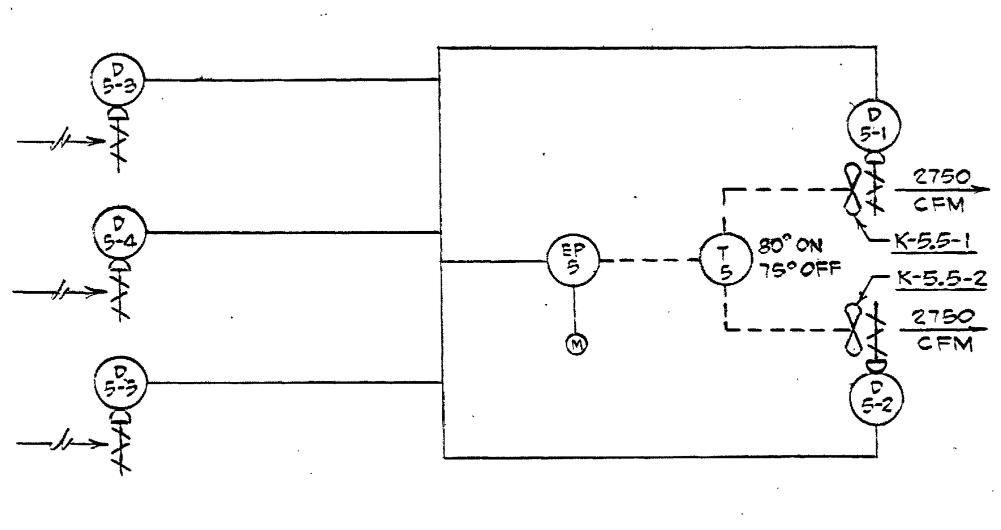

SYSTEM K-5 FAN LOFT

CONTROL EQUIPMENT NUMBERS FOR SYSTEM K-6 THRU SYSTEM K-10 H&V UNITS								
System	H&V Unit	Damper Motor	Heating Coil Valve	Wall Mounted Thermostat	Duct Mounted Thermostat	Duct Mounted Bulb	Temp. Switch	EP
K-6	K-6.7-1	D-6-1	V-6-1	TC-6-1	TC-6-2	TI-6-1	TS-6-1	EP-6-1
	K-6.7-2	D-6-2	V-6-2	TC-6-3	TC-6-4	TI-6-2	TS-6-2	EP-6-2
	K-6.7-3	D-6-3	V-6-3	TC-6-5	TC-6-6	TI-6-3	TS-6-3	EP-6-3
	K-6.7-4	D-6-4	V-6-4	TC-6-7	TC-6-8	TI-6-4	TS-6-4	EP-6-4
	K-6.7-5	D-6-5	V-6-5	TC-6-9	TC-6-10	TI-6-5	TS-6-5	EP-6-5
K-7	K-7.7-1	D-7-1	V-7-1	TC-7-1	TC-7-2	TI-7-1	TS-7-1	EP-7-1
	K-7.7-2	D-7-2	V-7-2	TC-7-3	TC-7-4	TI-7-2	TS-7-2	EP-7-2
	K-7.7-3	D-7-3	V-7-3	TC-7-5	TC-7-6	TI-7-3	TS-7-3	EP-7-3
	K-7.7-4	D-7-4	V-7-4	TC-7-7	TC-7-8	TI-7-4	TS-7-4	EP-7-4
	K-7.7-5	D-7-5	V-7-5	TC-7-9	TC-7-10	TI-7-5	TS-7-5	EP-7-5
K-8	K-8.7-1	D-8-1	V-8-1	TC-8-1	TC-8-2	TI-8-1	TS-8-1	EP-8-1
	K-8.7-2	D-8-2	V-8-2	TC-8-3	TC-8-4	TI-8-2	TS-8-2	EP-8-2
	K-8.7-3	D-8-3	V-8-3	TC-8-5	TC-8-6	TI-8-3	TS-8-3	EP-8-3
	K-8.7-4	D-8-4	V-8-4	TC-8-7	TC-8-8	TI-8-4	TS-8-4	EP-8-4
	K-8.7-5	D-8-5	V-8-5	TC-8-9	TC-8-10	TI-8-5	TS-8-5	EP-8-5
K-9	K-9.7-1	D-9-1	V-9-1	TC-9-1	TC-9-2	TI-9-1	TS-9-1	EP-9-1
	K-9.7-2	D-9-2	V-9-2	TC-9-3	TC-9-4	TI-9-2	TS-9-2	EP-9-2
	K-9.7-3	D-9-3	V-9-3	TC-9-5	TC-9-6	TI-9-3	TS-9-3	EP-9-3
	K-9.7-4	D-9-4	V-9-4	TC-9-7	TC-9-8	TI-9-4	TS-9-4	EP-9-4
	K-9.7-5	D-9-5	V-9-5	TC-9-9	TC-9-10	TI-9-5	TS-9-5	EP-9-5
	K-9.7-6	D-9-6	V-9-6	TC-9-11	TC-9-12	TI-9-6	TS-9-6	EP-9-6
K-10	K-10.7-1	D-10-1	V-10-1	TC-10-1	TC-10-2	TI-10-1	TS-10-1	EP-10-1
	K-10.7-2	D-10-2	V-10-2	TC-10-3	TC-10-4	TI-10-2	TS-10-2	EP-10-2
	K-10.7-3	D-10-3	V-10-3	TC-10-5	TC-10-6	TI-10-3	TS-10-3	EP-10-3
	K-10.7-4	D-10-4	V-10-4	TC-10-7	TC-10-8	TI-10-4	TS-10-4	EP-10-4
	K-10.7-5	D-10-5	V-10-5	TC-10-9	TC-10-10	TI-10-5	TS-10-5	EP-10-5
	K-10.7-6	D-10-6	V-10-6	TC-10-11	TC-10-12	TI-10-6	TS-10-6	EP-10-6

LEGEND & ABBREVIATIONS

K-30.6-1

- 1 — PART NUMBER
- 6 — EQUIPMENT IDENTIFICATION
- 30 — SYSTEM NUMBER
- K — HV & AC EQUIPMENT

.1	Filter 80% NBS.
.2	Air Conditioning Unit.
.3	Heating Coil.
.4	Return Fan.
.5	Exhaust Fan
.6	Unit Heater.
.7	H&V Unit.
.8	Pump.
.9	Refrigeration Unit.
.10	Cooling Tower.
.11	Condensate Return Pump.
.12	Gravity Roof Ventilator.

- INSTRUMENT IMPULSE PIPING
- ELECTRICAL CONTROL
- BULB & CAPILLARY
- LOCALLY MOUNTED INSTRUMENT
- HVAC CONTROL PANEL MOUNTED INSTRUMENT
- M — MAIN AIR SUPPLY
- INTERCONNECT ALL PARTS WITH SAME NUMBER

D	DAMPER
EP	ELECTRIC-PNEUMATIC SWITCH
FC	FAIL CLOSED
FO	FAIL OPEN
FS	FLOW SWITCH
G	PRESSURE GAGE
HC	HUMIDITY CONTROLLER
M	MANUAL
MR	MULTIPLYING RELAY
MS	MANUAL SWITCH
PC	PRESSURE CONTROLLER
PRV	PRESSURE REDUCING VALVE
R	PNEUMATIC RELAY
S	SWITCH
TC	TEMPERATURE CONTROLLER
TI	TEMPERATURE INDICATOR
TS	TEMPERATURE SWITCH
V	VALVE
ATMOS	ATMOSPHERE
A.D.	ACCESS DOOR
B.R.	BOTTOM REGISTER
CFM	CUBIC FEET PER MINUTE
CHWS	CHILLED WATER SUPPLY
CHWR	CHILLED WATER RETURN
CWS	CONDENSER WATER SUPPLY
CWR	CONDENSER WATER RETURN
ST	STEAM
CR	CONDENSATE RETURN
F & T	FLOAT & THERMOSTATIC
F.A.I.	FRESH AIR INTAKE
MAX.	MAXIMUM
MIN.	MINIMUM
M.O.	MOTOR OPERATED
W.G.	WATER GAGE
W.M.S.	WIRE MESH SCREEN
—L→	DOOR LOUVER
F.C.	FLEXIBLE CONNECTION
T.R.	TOP REGISTER
T	THERMOSTAT
DN	DOWNWARD PITCH OF PIPE IN DIRECTION OF FLOW
H.P.	HIGH PRESSURE
HC	HEATING COIL
CC	COOLING COIL
W	MAKE-UP WATER

LIST OF DRAWINGS

FE-C-4619-AC-2	HVAC - Ductwork & Piping Basement Plan
FE-C-4619-AC-3	HVAC - Ductwork & Piping Ground Floor Plan
FE-C-4619-AC-4	HVAC - Ductwork & Piping H&V Equip. Rm. & Low Roof Plan
FE-C-4619-AC-5	HVAC - Ductwork & Piping High Bay-20'-0",40'-0",60'-0"&80'-0" Levels
FE-C-4619-AC-6	HVAC - Ductwork & Piping High Bay-Ground Fl., 100'-0"Level&Roof
FE-C-4619-AC-7	HVAC - Piping High Bay-South & East Elev's.
FE-C-4619-AC-8	HVAC - Ductwork & Piping Details & Equipment
FE-C-4619-AC-9	HVAC - Piping High Bay-North & West Elev's.
FE-C-4619-AC-10	HVAC - Equipment Schedule

AS BUILT

REV.	BY	DATE		C. I. NO.	APPROVED
2	BLM	5-27-65	REVISED SYSTEM K-3 COMP. CONTROL DIAGRAM		
1		4/24/63	DELETE RELAY R-2-1 & HUMID. HC-2-1	5560-3	

NATIONAL AERONAUTICS AND SPACE ADMINISTRATION — M S F C HUNTSVILLE, ALABAMA

VITRO ENGINEERING COMPANY A DIVISION OF VITRO CORPORATION OF AMERICA NEW YORK

ADDITION TO BLDG. 4619 - LOAD TEST ANNEX

HVAC - FLOW & CONTROL DIAGRAMS

NASA AE CONT. NO.

FILE NO. MSFC 7416

SUBMITTED: CHIEF DES. ENGR. AE. DATE: SEP. 14, 1962

APPROVAL RECOMMENDED: LAB DATE: 10-22-62

APPROVED: CHIEF, ENGINEERING BRANCH NASA DATE: 10-25-62

DESIGNED M. K.
DRAWN N. PEPE
CHECKED M. K.
SCALE: NONE

APPROVAL RECOMMENDED: CHIEF, DESIGN SECTION
DESIGN DATE: OCT 22 1962
SPEC. NO. FE-D-303

DRWG. NO. FE-C-4619-AC-1

Approved For Safety OCT 29 1962 DATE

MSFC MASTER BID DISK 11-18-2013

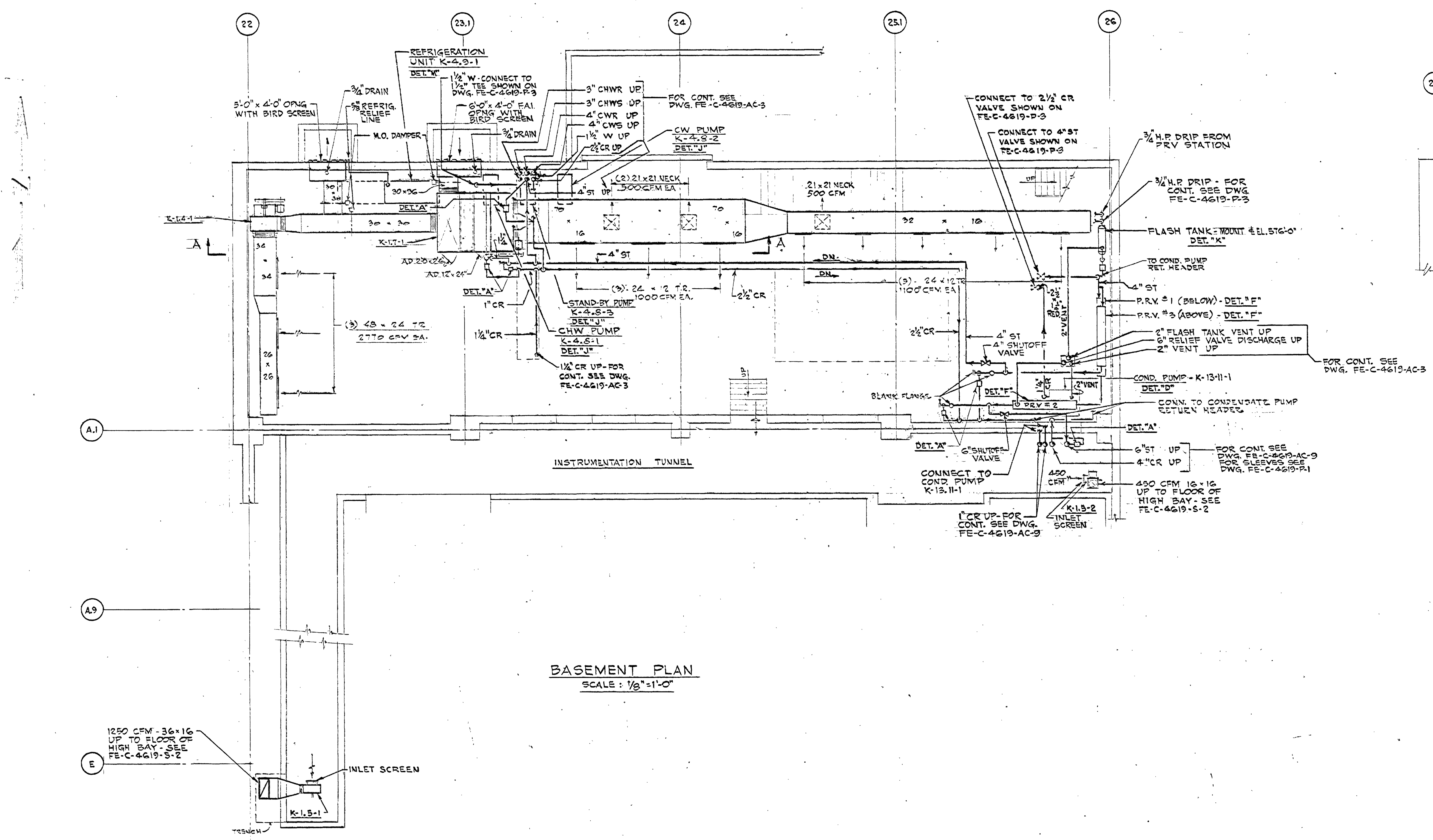

BASEMENT PLAN
SCALE: 1/8"=1'-0"

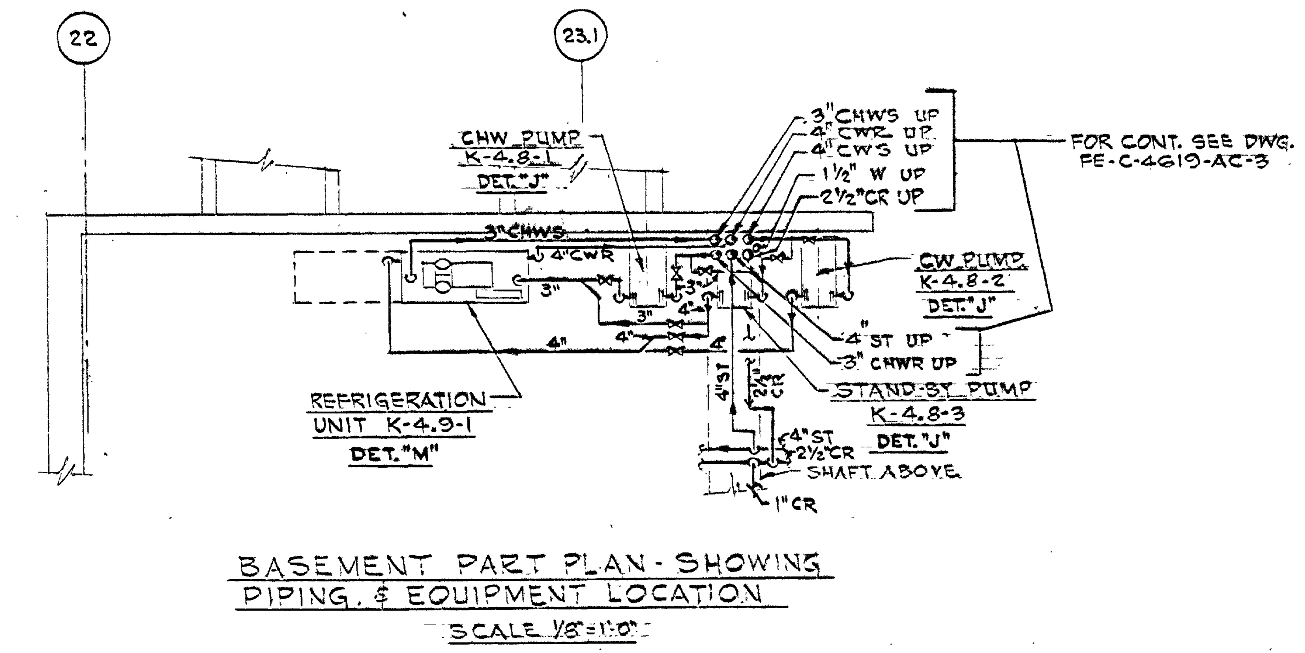

BASEMENT PART PLAN - SHOWING PIPING & EQUIPMENT LOCATION
SCALE 1/8"=1'-0"

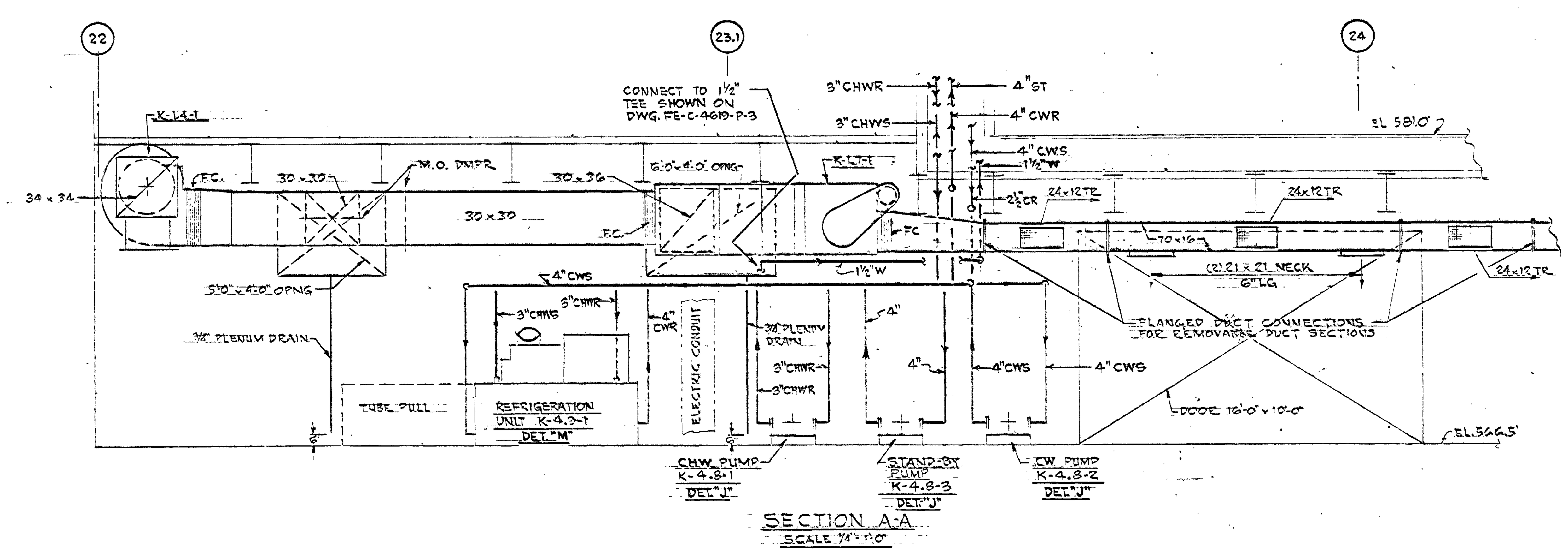

SECTION A-A
SCALE 1/4"=1'-0"

AS BUILT

NOTES:
1: FOR LEGEND & ABBREVIATIONS SEE FE-C-4619-AC-1.
2: FOR PIPING & EQUIPMENT DETAILS SEE FE-C-4619-AC-8.
3: 4-ELBOW SWING CONNECTIONS SHALL BE MADE TO ALL HEATING COILS, UNIT HEATERS & STEAM SUPPLY BRANCH MAINS.

APPROVED FOR SAFETY
OCT 20 1962
GEN. ENGR. SAFETY OFFICE — DATE

REV.	BY	DATE		C.I. NO.	APPROVED

NATIONAL AERONAUTICS AND SPACE ADMINISTRATION — MSFC HUNTSVILLE, ALABAMA

VITRO ENGINEERING COMPANY A DIVISION OF VITRO CORPORATION OF AMERICA NEW YORK

ADDITION TO BLDG. 4619 - LOAD TEST ANNEX
HVAC - DUCTWORK & PIPING
BASEMENT PLAN

NASA AE CONT. NO.
FILE NO. MSFC 7417

SUBMITTED: CHIEF DES. ENGR. — AE: DATE: SEP. 14, 1962
APPROVAL RECOMMENDED: J.J. Sawyer — LAB DATE: 10-22-62
APPROVED: CHIEF, ENGINEERING BRANCH — NASA DATE: 10-25-62
DESIGNED N. PEPE
DRAWN N. PEPE
CHECKED M.K.
APPROVAL RECOMMENDED: B. Bain CHIEF, DESIGN SECTION
DESIGN DATE: OCT 25, 1962
SPEC. NO. FE-D-303
SCALE: AS NOTED
DRWG. NO. FE-C-4619-AC-2

MSFC-FORM 232 (REV. DEC. 1960)

MSFC MASTER BID DISK 11-18-2013

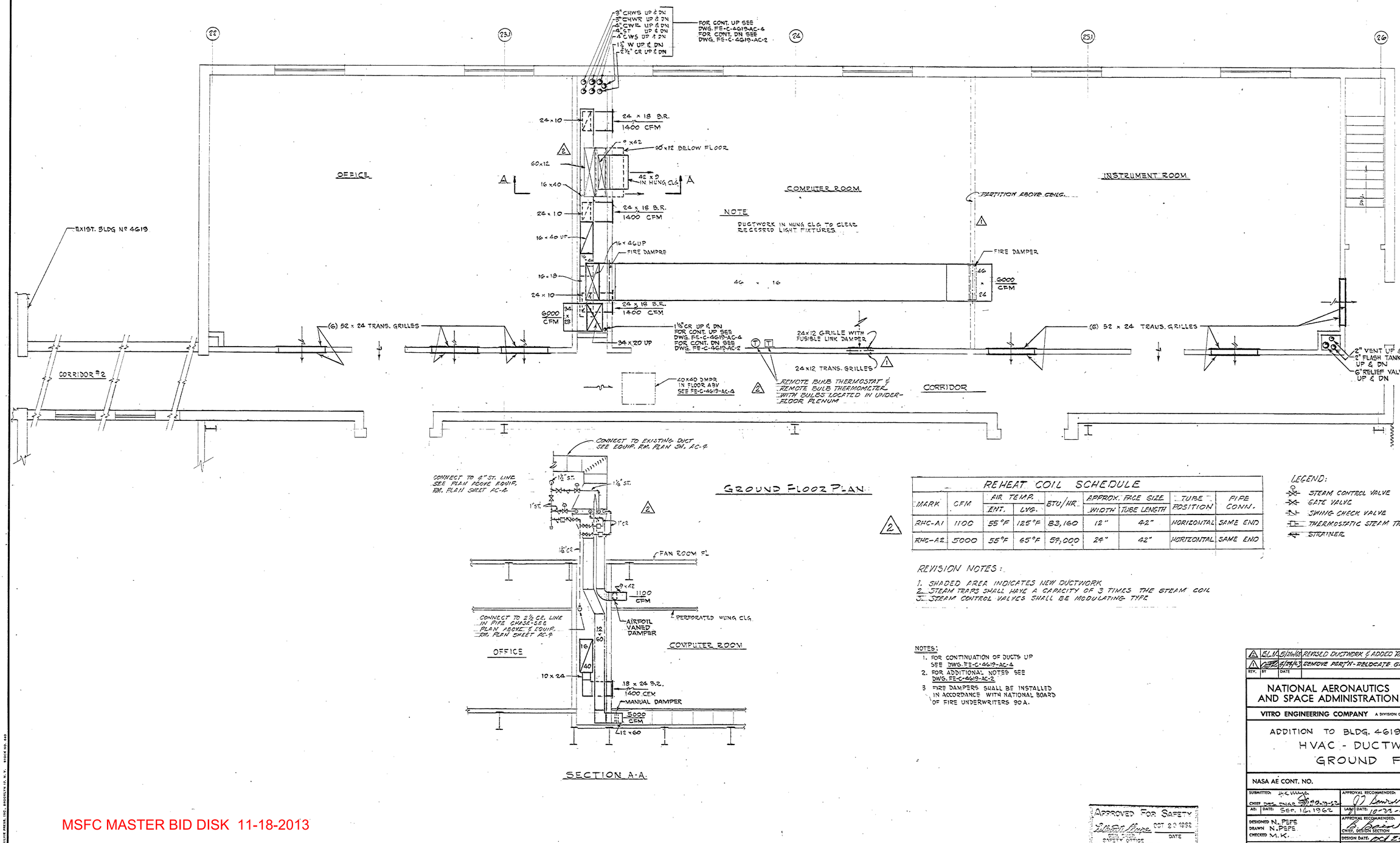

SECTION A-A

GROUND FLOOR PLAN

REHEAT COIL SCHEDULE

MARK	CFM	AIR TEMP. ENT.	AIR TEMP. LVG.	BTU/HR	APPROX. FACE SIZE WIDTH	APPROX. FACE SIZE TUBE LENGTH	TUBE POSITION	PIPE CONN.
RHC-A1	1100	55°F	125°F	83,160	12"	42"	HORIZONTAL	SAME END
RHC-A2	5000	55°F	65°F	59,000	24"	42"	HORIZONTAL	SAME END

LEGEND:
- STEAM CONTROL VALVE
- GATE VALVE
- SWING CHECK VALVE
- THERMOSTATIC STEAM TRAP
- STRAINER

REVISION NOTES:
1. SHADED AREA INDICATES NEW DUCTWORK
2. STEAM TRAPS SHALL HAVE A CAPACITY OF 3 TIMES THE STEAM COIL
3. STEAM CONTROL VALVES SHALL BE MODULATING TYPE

AS BUILT

NOTES:
1. FOR CONTINUATION OF DUCTS UP SEE DWG. FE-C-4619-AC-4
2. FOR ADDITIONAL NOTES SEE DWG. FE-C-4619-AC-2
3. FIRE DAMPERS SHALL BE INSTALLED IN ACCORDANCE WITH NATIONAL BOARD OF FIRE UNDERWRITERS 90A.

Approved For Safety
Gilbert Moore OCT 20 1962
SAFETY OFFICE DATE

REV.	BY	DATE		C.I. NO.	APPROVED
2	EL.H	5/20/63	REVISED DUCTWORK & ADDED REHEAT COILS		WJ MD
1	[illegible]	5/29/63	REMOVE PART'N-RELOCATE GRILLE	5-5760-3	WJ MD

NATIONAL AERONAUTICS AND SPACE ADMINISTRATION — M S F C, HUNTSVILLE, ALABAMA

VITRO ENGINEERING COMPANY A DIVISION OF VITRO CORPORATION OF AMERICA NEW YORK

ADDITION TO BLDG. 4619 - LOAD TEST ANNEX
HVAC - DUCTWORK & PIPING
GROUND FLOOR PLAN

NASA AE CONT. NO. | FILE NO. MSFC 7418

SUBMITTED: CHIEF, DES. ENGR.	H.E. Wilson 10-17-62	APPROVAL RECOMMENDED:	APPROVED: Chief, Engineering Branch
A/E DATE: SEP. 16 1962		LA&W DATE: 10-22-62	NASA DATE: 10-25-62
DESIGNED N. PEPS DRAWN N. PEPS CHECKED M.K.		APPROVAL RECOMMENDED: Chief, Design Section	DRWG. NO. FE-C-4619-AC-3
SCALE: 1/4" = 1'-0"		DESIGN DATE: Oct 24, 1962	SPEC. NO. FE-0-363

MSFC MASTER BID DISK 11-18-2013

MSFC-FORM 232 (REV. DEC. 1960)
GRILLIE PRESS, INC., BROOKLYN 17, N.Y. STOCK NO. 440

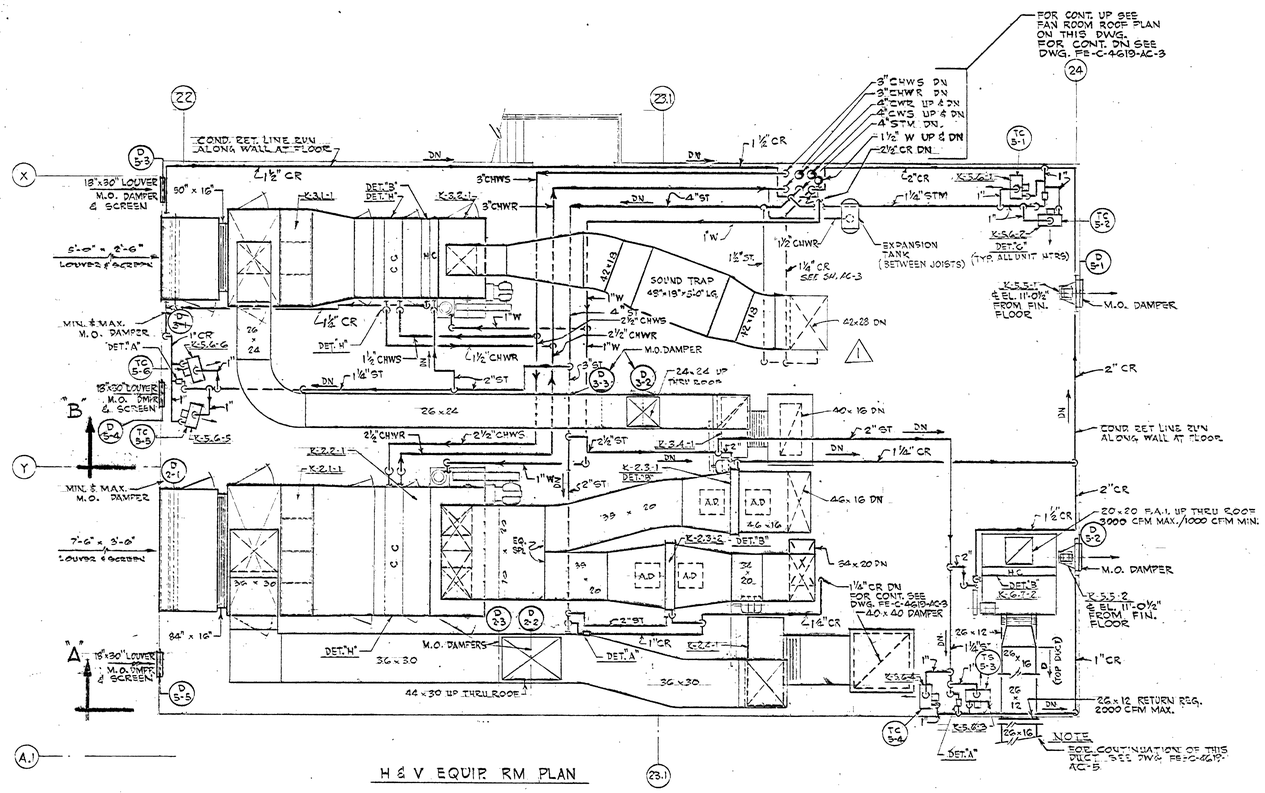

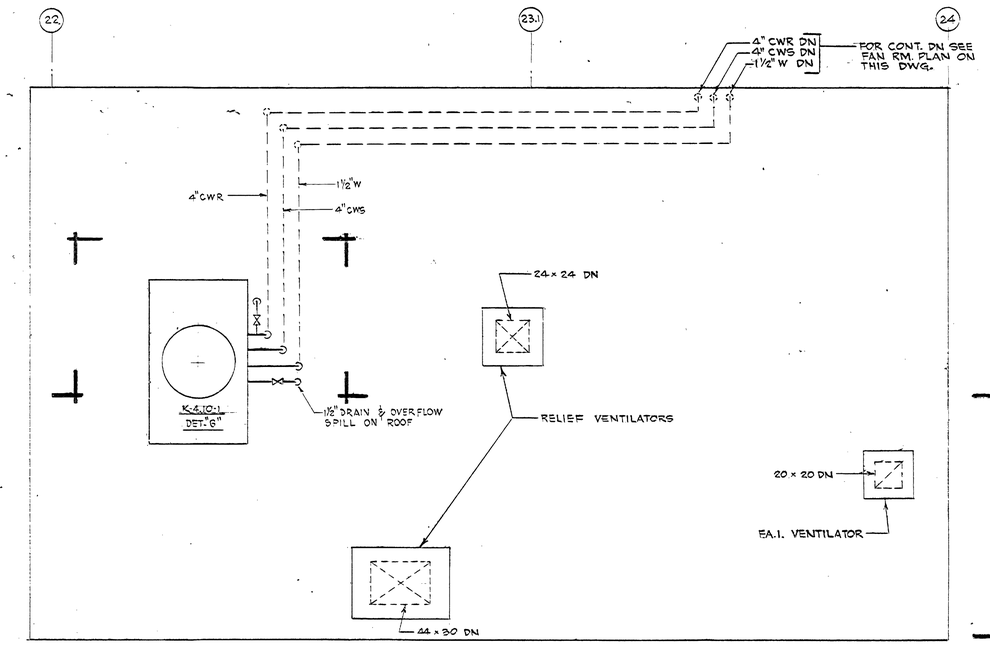

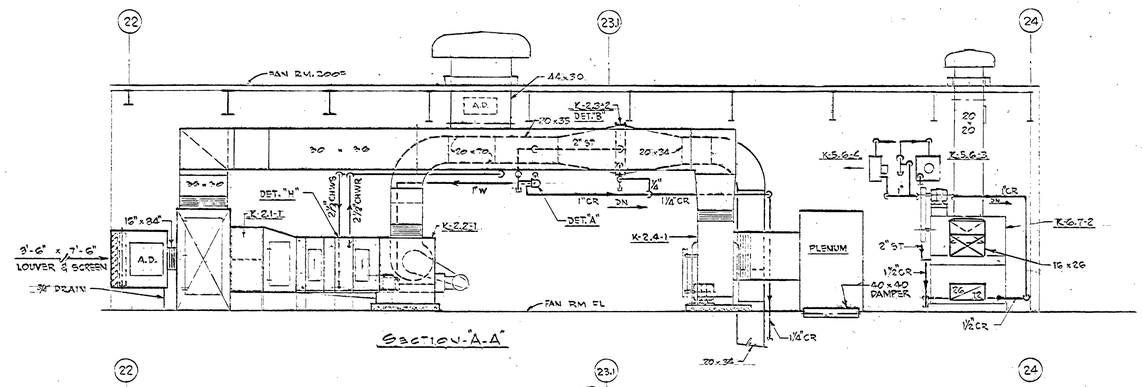

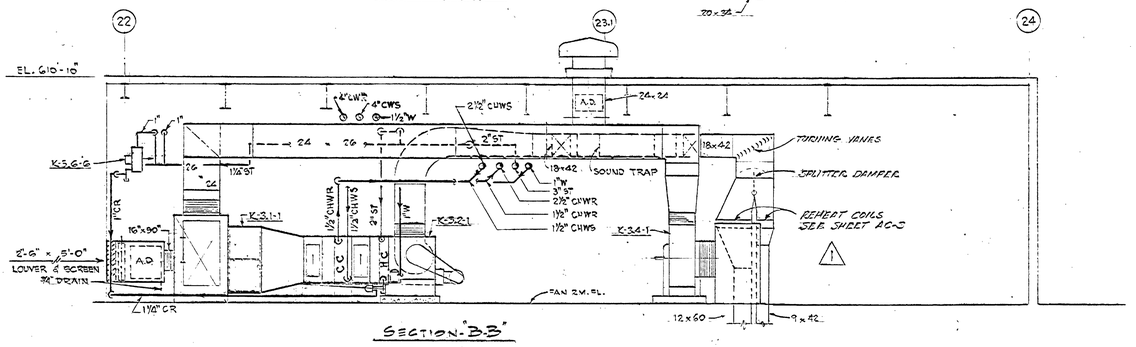

REVISION NOTE:
SHADED AREA INDICATES NEW DUCTWORK

NOTES:
1. FOR CONTINUATION OF DUCTS UP THRU FAN ROOM ROOF SEE ROOF PLAN ON THIS DWG.
2. FOR CONTINUATION OF DUCTS DN. THRU FAN ROOM FLOOR SEE FE-C-4619-AC-3.
3. FOR ADDITIONAL NOTES SEE FE-C-4619-AC-2.

AS BUILT

REV.	BY	DATE		C.I. NO.	APPROVED
1	BLM	5-27-65	REVISED DUCTWORK & ADDED REHEAT COILS	G	GWS

NATIONAL AERONAUTICS AND SPACE ADMINISTRATION — MSFC, HUNTSVILLE, ALABAMA

VITRO ENGINEERING COMPANY A DIVISION OF VITRO CORPORATION OF AMERICA NEW YORK

ADDITION TO BLDG. 4619 - LOAD TEST ANNEX
HVAC - DUCTWORK & PIPING
H & V EQUIP. RM & LOW ROOF PLAN

NASA AE CONT. NO.

FILE NO. MSFC 7419

SUBMITTED: H. K. Mills — CHIEF, DES. ENGR. — A/E — DATE: SEP 13, 1962

APPROVAL RECOMMENDED: — LAW — DATE: 10-22-62

APPROVED: — CHIEF, ENGINEERING BRANCH — NASA — DATE: 10-25-62

DESIGNED N. PEPE
DRAWN N. PEPE
CHECKED M. K.

APPROVAL RECOMMENDED: — CHIEF, DESIGN SECTION — DESIGN DATE: OCT 24 1962

DRWG. NO. FE-C-4619-AC-4

SCALE: 1/4" = 1'-0" — SPEC. NO. FE-10-303

APPROVED FOR SAFETY — SAFETY OFFICE — OCT 29 1962 — DATE

MSFC MASTER BID DISK 11-18-2013

MSFC-FORM 232 (REV. DEC., 1960)

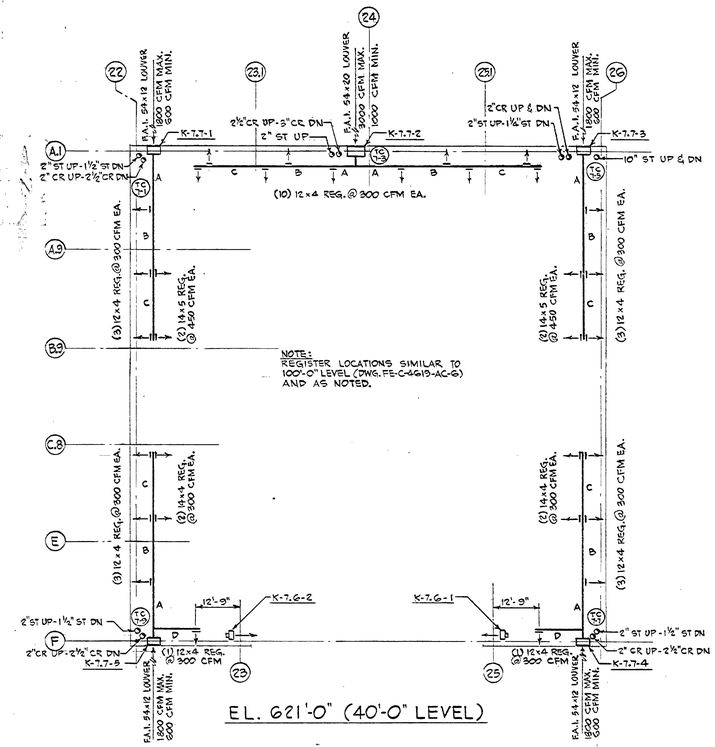

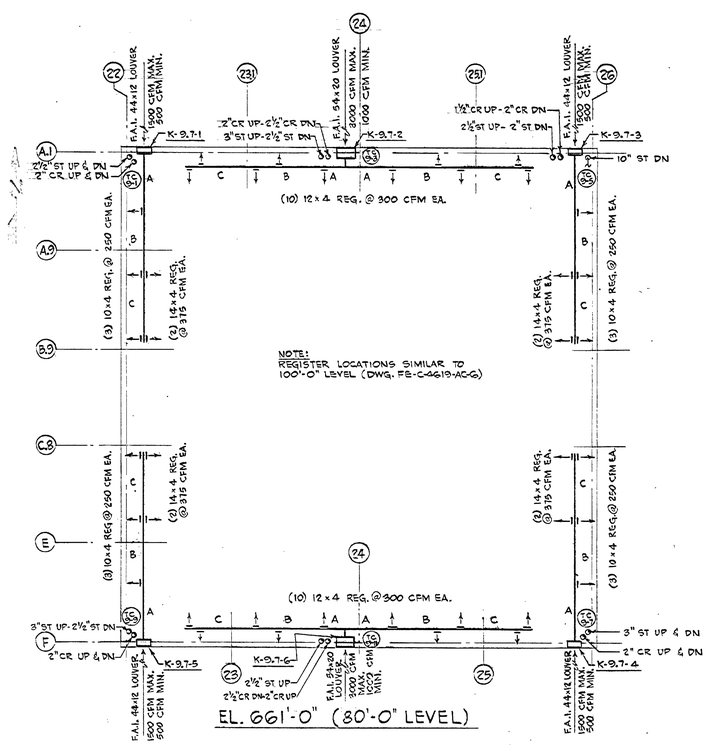

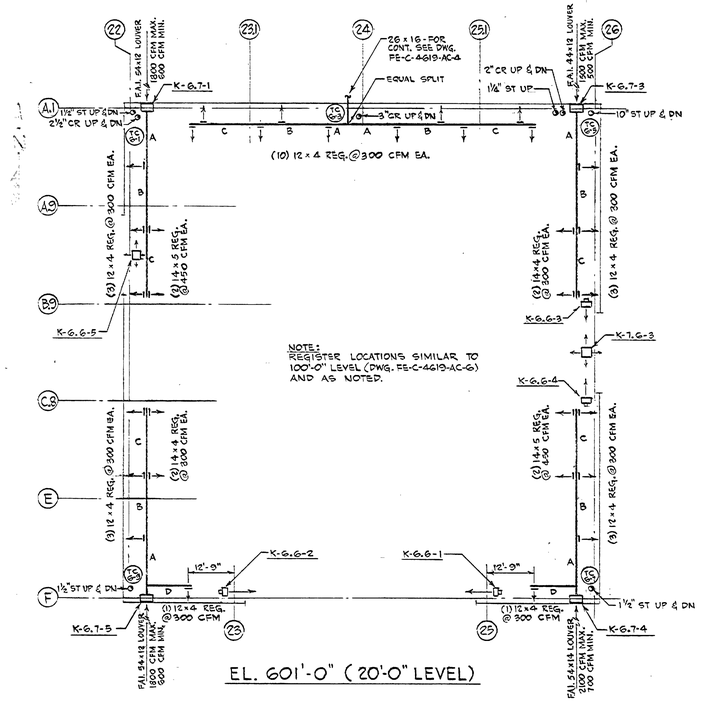

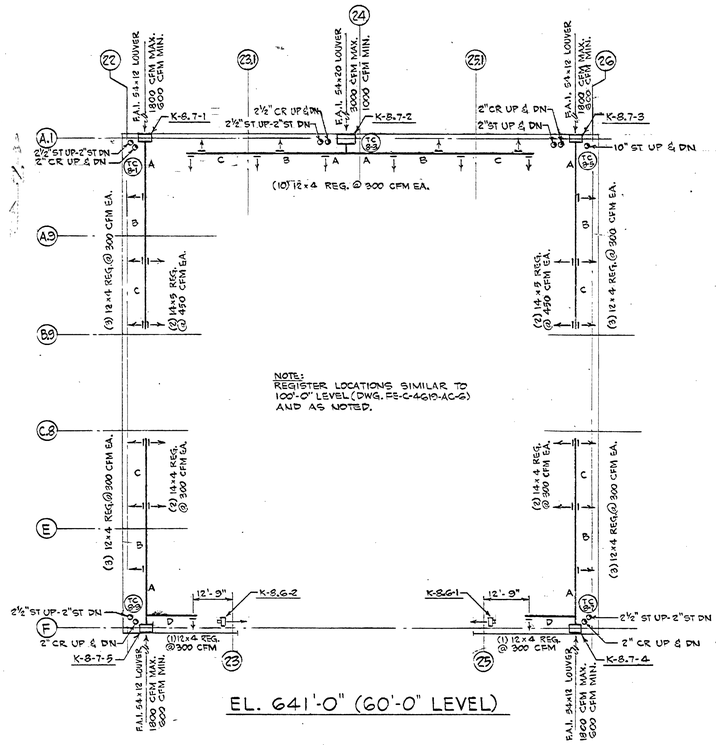

SCHEDULE OF DUCT SIZES

H&V Unit No.	A	B	C	D
K-6.7-1	16 x 16	15 x 15	12 x 12	-
K-6.7-2	14 x 14	13 x 13	10 x 10	-
K-6.7-3	15 x 15	14 x 14	11 x 11	-
K-6.7-4	16 x 16	15 x 15	12 x 12	8 x 8
K-6.7-5	15 x 15	14 x 14	11 x 11	8 x 8
K-7.7-1	16 x 16	15 x 15	12 x 12	-
K-7.7-2	15 x 15	14 x 14	11 x 11	-
K-7.7-3	16 x 16	15 x 15	12 x 12	-
K-7.7-4	15 x 15	14 x 14	11 x 11	8 x 8
K-7.7-5	15 x 15	14 x 14	11 x 11	8 x 8
K-8.7-1	16 x 16	15 x 15	12 x 12	-
K-8.7-2	15 x 15	14 x 14	11 x 11	-
K-8.7-3	16 x 16	15 x 15	12 x 12	-
K-8.7-4	15 x 15	14 x 14	11 x 11	8 x 8
K-8.7-5	15 x 15	14 x 14	11 x 11	8 x 8
K-9.7-1	15 x 15	14 x 14	11 x 11	-
K-9.7-2	↕	↕	↕	-
K-9.7-3	↕	↕	↕	-
K-9.7-4	↕	↕	↕	-
K-9.7-5	↕	↕	↕	-
K-9.7-6	15 x 15	14 x 14	11 x 11	-

NOTE:

FOR FLOW & CONTROL DIAGRAMS, LEGEND & ABBREVIATIONS, SEQUENCE OF OPERATION, AND LIST OF DRAWINGS SEE DWG. FE-C-4619-AC-1.

REFERENCE DRAWINGS

FE-C-4619-AC-4	HVAC-DUCTWORK & PIPING - H & V EQUIP. RM & LOW ROOF PLAN.
FE-C-4619-AC-6	HVAC-DUCTWORK & PIPING-HIGH BAY-GROUND FL., 100'-0" LEVEL & ROOF.

AS BUILT

REV.	BY	DATE	C.I. NO.	APPROVED

NATIONAL AERONAUTICS AND SPACE ADMINISTRATION — M-S-F-C HUNTSVILLE, ALABAMA

VITRO ENGINEERING COMPANY A DIVISION OF VITRO CORPORATION OF AMERICA NEW YORK

ADDITION TO BLDG. 4619 - LOAD TEST ANNEX

HVAC - DUCTWORK & PIPING

HIGH BAY - 20'-0", 40'-0", 60'-0" & 80'-0" LEVELS

NASA AE CONT. NO.

FILE NO. M-S-F-C 7420

SUBMITTED: H.K. Mayo	APPROVAL RECOMMENDED: C.O. Simpson	APPROVED: W.W. Parker
CHIEF, RES. ENGR. DIV.	LAN/DATE: 10/22/62	CHIEF, ENGINEERING BRANCH
AE DATE: SEP 15, 1962		NASA DATE: 10/26/62
DESIGNED N. PEPE	APPROVAL RECOMMENDED: C. Simon	DRWG. NO.
DRAWN N. PEPE	CHIEF, DESIGN SECTION	
CHECKED M.K.	DESIGN DATE: OCT 24, 1962	FE-C-4619-AC-5
SCALE: 1/16" = 1'-0"	SPEC. NO. FE-D-303	

APPROVED FOR SAFETY
FIELD ENGR. DATE

MSFC MASTER BID DISK 11-18-2013

MSFC-FORM 232 (REV. DEC., 1960)

FORM No. 1000.807-0

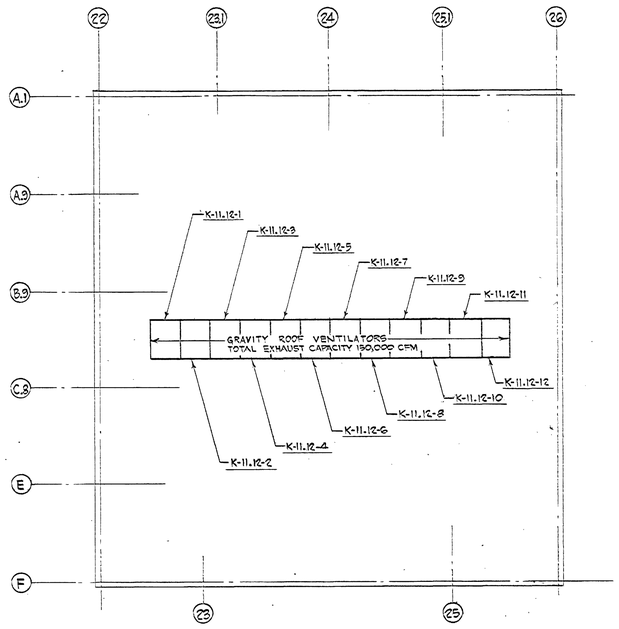

ROOF PLAN
SCALE: 1/16" =1'-0"

(24)

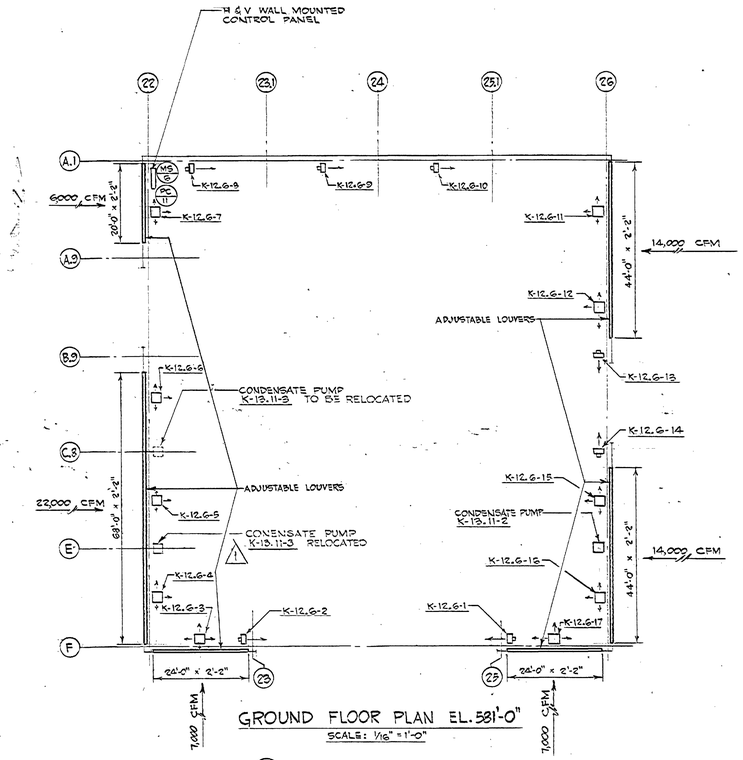

GROUND FLOOR PLAN EL. 581'-0"
SCALE: 1/16" = 1'-0"

SCHEDULE OF DUCT SIZES			
H&V Unit No.	A	B	C
K-10.7-1	22 x 22	20 x 20	16 x 16
K-10.7-2	21 x 21	↕	15 x 15
K-10.7-3	22 x 22	↕	16 x 16
K-10.7-4	22 x 22	↕	16 x 16
K-10.7-5	22 x 22	↕	16 x 16
K-10.7-6	21 x 21	20 x 20	15 x 15

⚠ REVISION NOTES:

1. RELOCATE EXISTING PUMP K-13.11-3 FROM COLUMN "C.8" TO COLUMN "E" AS SHOWN ON GROUND FLOOR PLAN THIS SHEET
2. DELETE APPROX. 24' OF 2½" CONDENSATE LINE FROM PRESENT LOCATION OF CONDENSATE PUMP AT COLUMN "C.8" TO NEW LOCATION OF CONDENSATE PUMP AT COLUMN "E"
3. EXISTING ¾" COND. LINE FROM HEATER K-12.6-6 TO BE EXTENDED TO HEATER K-12.6-5. INCREASE CONDENSATE LINE TO 1" FROM HEATER K-12.6-5 TO CONDENSATE PUMP AT NEW LOCATION
4. EXTEND OR RELOCATE CONDENSATE VENT AND DISCHARGE LINES AS REQUIRED FOR NEW INSTALLATION.
5. CONDENSATE PUMP SUPPORT SHALL BE INSTALLED AT COLUMN "E" IN THE SAME MANNER AS NOW EXISTING AT COLUMN "C.8" AND SHALL CLEAR EXISTING ACCESS OPENING IN FLOOR ADJACENT TO COLUMN "C.8"

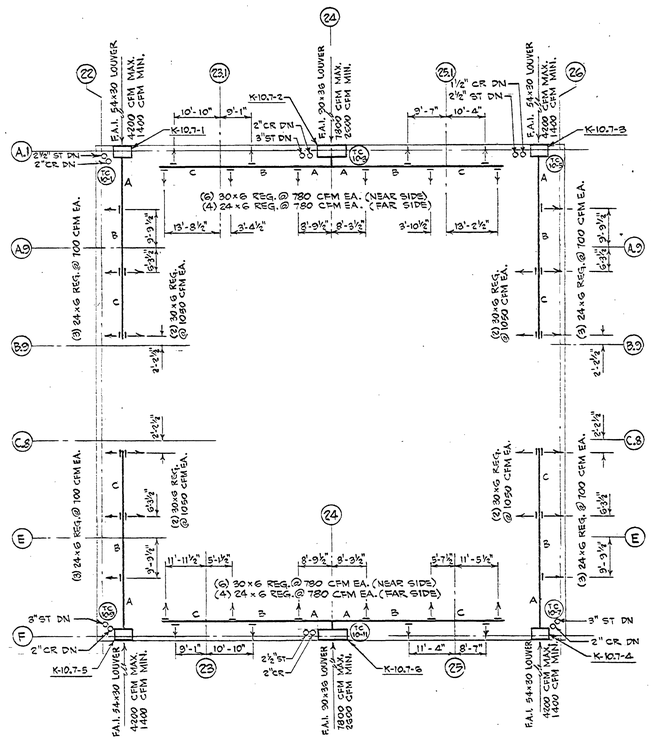

EL. 681'-0" (100'-0" LEVEL)
SCALE: 1/16" = 1'-0"

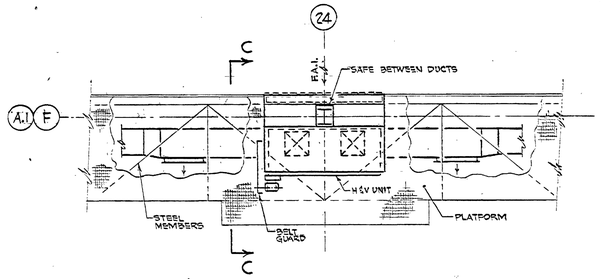

PLAN-TYPICAL H & V UNIT CENTERED AT COL. 24 (2 NOZZLES)
SCALE: 1/4" = 1'-0"

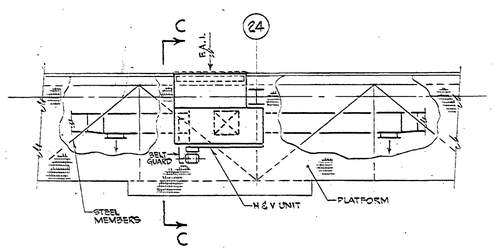

PLAN-TYPICAL H & V UNIT AT COL. 24 (1 NOZZLE)
SCALE: 1/4" = 1'-0"

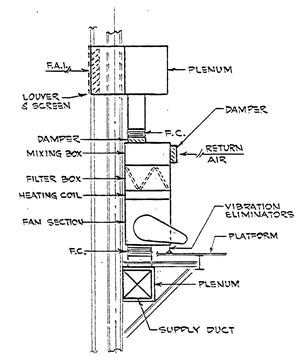

SECTION "C-C"
SCALE: 1/4"=1'-0"

NOTE:
FOR FLOW & CONTROL DIAGRAMS, LEGEND & ABBREVIATIONS, SERVENCE OF OPERATION, AND LIST OF DRAWINGS SEE DWG. FE-C-4619-AC-1.

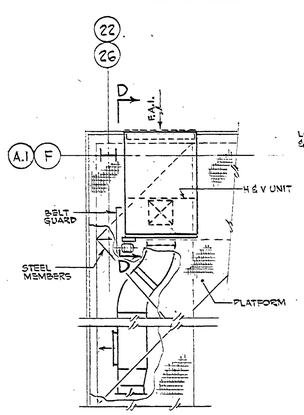

PLAN-TYP. H&V UNIT AT CORNER
SCALE: 1/4"=1'-0"

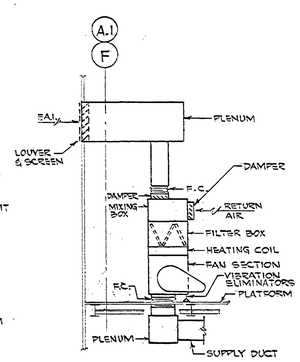

SECTION "D-D"
SCALE: 1/4"=1'-0"

AS BUILT

REV.	BY.	DATE		C.I. NO.	APPROVED
⚠1	BLM	4-9-64	RELOCATED CONDENSATE PUMP K-13.11-3	5576-24	

NATIONAL AERONAUTICS AND SPACE ADMINISTRATION — M S F C — HUNTSVILLE, ALABAMA

VITRO ENGINEERING COMPANY A DIVISION OF VITRO CORPORATION OF AMERICA — NEW YORK

ADDITION TO BLDG. 4619 - LOAD TEST ANNEX
HVAC - DUCTWORK & PIPING
HIGH BAY-GROUND FL., 100'-0" LEVEL & ROOF

NASA AE CONT. NO. — FILE NO. MSFC 7421

SUBMITTED: [signature] — APPROVAL RECOMMENDED: [signature] — APPROVED: [signature]
CHIEF DES. ENGR. [signature] 10-62 — A.E. DATE: SEP 14 1962 — LAB. DATE: 10-22-62 — CHIEF, ENGINEERING BRANCH — NASA DATE: 10-25-62

DESIGNED N. PEPE
DRAWN N. PEPE
CHECKED M.K.
APPROVAL RECOMMENDED: [signature] CHIEF, DESIGN SECTION
DESIGN DATE: OCT 24, 1962
SCALE: AS NOTED
SPEC. NO. FE-0-203
DRWG. NO. FE-C-4619-AC-6

APPROVED FOR SAFETY [signature] OCT 29 1962 DATE

MSFC MASTER BID DISK 11-18-2013

FORM No. 1000.807-0

SECTION D-D

NOTE - FOR CONTINUATION OF ALL PIPES AT COL. F SEE SECT. "C-C" AT COL. 26 ON THIS DWG.
- FOR CONTINUATION OF ALL PIPES AT COL. A.1 SEE SECT. "A-A" AT COL. 26 ON FE-C-4619-AC-9.

LEGEND ⚠ TYP. FOR DWG. AC-7 & AC-9 REV ⚠

DEMOLITION NOTES

PIPING AND EQUIP. TO BE REMOVED

NOTE: FOR NOTES SEE FE-C-4619-AC-9.

SECTION C-C

NOTE - FOR CONTINUATION OF ALL PIPES AT COL. 22 SEE SECT. "B-B" AT COL. F ON FE-C-4619-AC-9.
- FOR CONTINUATION OF ALL PIPES AT COL. 26 SEE SECT. "D-D" AT COL. F ON THIS DWG.

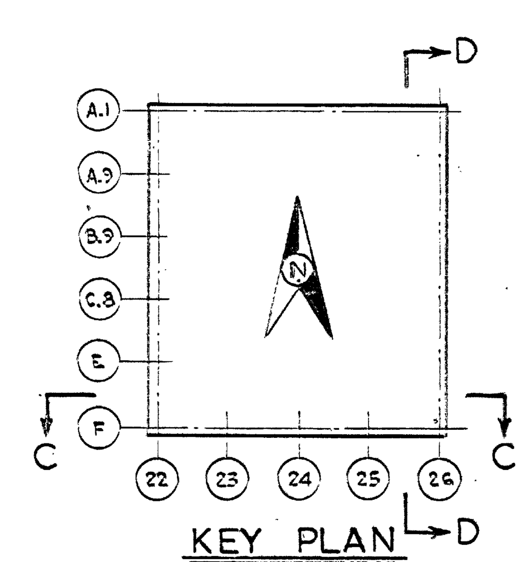

KEY PLAN

APPROVED FOR SAFETY

AS BUILT

⚠ 7/31/78 DEMOLITION ONLY

NATIONAL AERONAUTICS AND SPACE ADMINISTRATION — MSFC HUNTSVILLE, ALABAMA

VITRO ENGINEERING COMPANY — A DIVISION OF VITRO CORPORATION OF AMERICA — NEW YORK

ADDITION TO BLDG. 4619 - LOAD TEST ANNEX
HVAC - PIPING
HIGH BAY - SOUTH & EAST ELEV'S

FILE NO. MSFC 7422

DATE SEP. 14, 1962

SCALE: 1/8" = 1'-0"

DRAWN Fono — CHECKED N. PEPE

DWG. NO. FE-C-4619 AC-7

MSFC MASTER BID DISK 11-18-2013

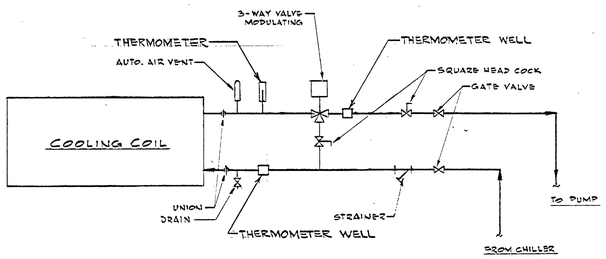

TYPICAL COOLING COIL CONN-DETAIL "H"

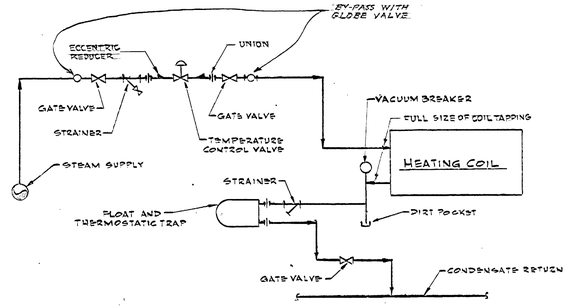

TYPICAL HEATING COIL CONN-DETAIL "B"

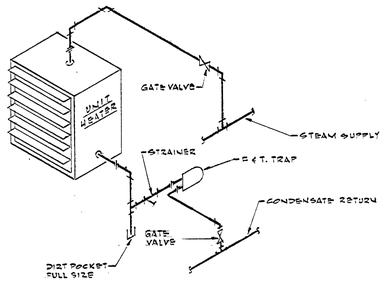

TYPICAL UNIT HEATER CONN-DETAIL "C"

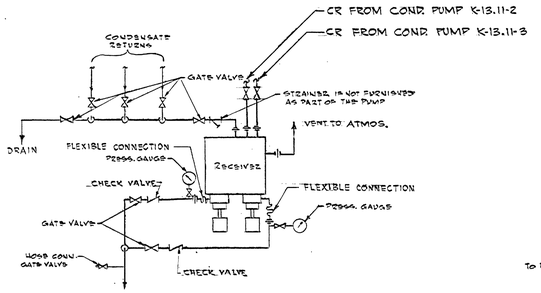

CONDENSATE PUMP CONN'S-DETAIL "D"

NOTE:
PUMP DISCHARGE PIPING ARRANGEMENT TYPICAL FOR PUMPS K-13.11-1 ; K-13.11-2 ; & K-13.11-3

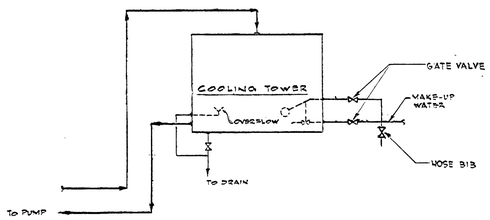

COOLING TOWER PIPING CONN'S-DETAIL "G"

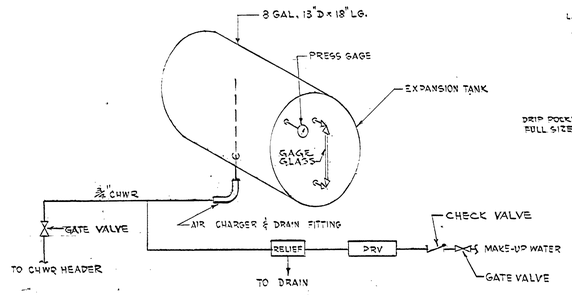

CLOSED EXPANSION TANK - DETAIL "L"

NOTE: EXPANSION CAPACITY OF TANK SHOULD BE WITHIN RANGE OF GAGE GLASS

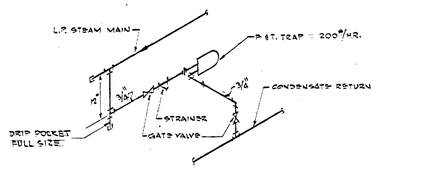

END OF MAIN DRIP-DETAIL "A"

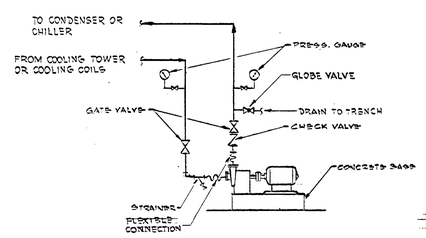

TYPICAL WATER PUMP CONNS DETAIL "J"

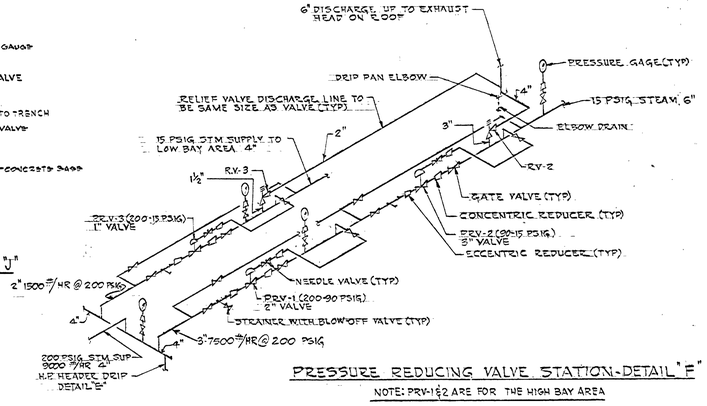

PRESSURE REDUCING VALVE STATION-DETAIL "F"

NOTE: PRV-1 & 2 ARE FOR THE HIGH BAY AREA

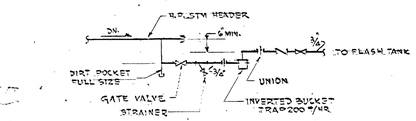

H.P DRIP-DETAIL "E"

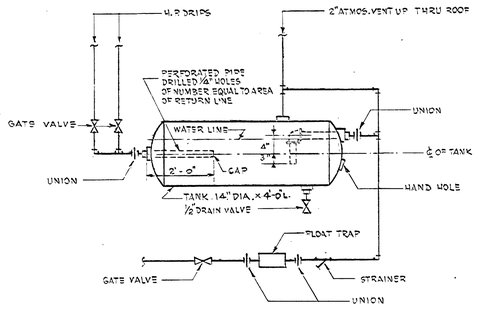

FLASH TANK-DETAIL "K"

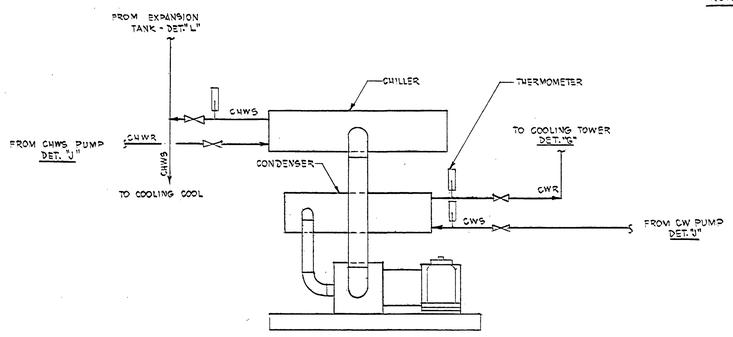

REFRIGERATION MACHINE PIPING CONNS - DETAIL "M"

NOTE:
1. FOR LEGEND & ABBREVIATIONS SEE FE-C-4619-AC-1

AS BUILT

REV.	BY	DATE		C.I. NO.	APPROVED

NATIONAL AERONAUTICS AND SPACE ADMINISTRATION — M S F C, HUNTSVILLE, ALABAMA

VITRO ENGINEERING COMPANY A DIVISION OF VITRO CORPORATION OF AMERICA — NEW YORK

ADDITION TO BLDG. 4619 - LOAD TEST ANNEX
HVAC - DUCTWORK & PIPING
DETAILS & EQUIPMENT

NASA AE CONT. NO.		FILE NO. MSFC 7423
SUBMITTED: CHIEF, DES. ENGR. 10-10-62	APPROVAL RECOMMENDED:	APPROVED: CHIEF, ENGINEERING BRANCH
AE: DATE: SEP 14, 1962	LAB: DATE: 10-22-62	NASA: DATE: 10-25-62
DESIGNED M.K. DRAWN N.P. & B.S CHECKED M.K.	APPROVAL RECOMMENDED: CHIEF, DESIGN SECTION	DRWG. NO. FE-C-4619-AC-8
SCALE: NO SCALE	DESIGN DATE: Oct 26, 1962	
	SPEC. NO. FE-D-303	

APPROVED FOR SAFETY
Oct 20 1962
CHIEF, SAFETY OFFICE — DATE

MSFC MASTER BID DISK 11-18-2013

MSFC-FORM 232 (REV. DEC., 1960)
GOLDEN PRESS, INC., BROOKLYN 17, N.Y. STOCK NO. 460

FORM No. 1000.807-0

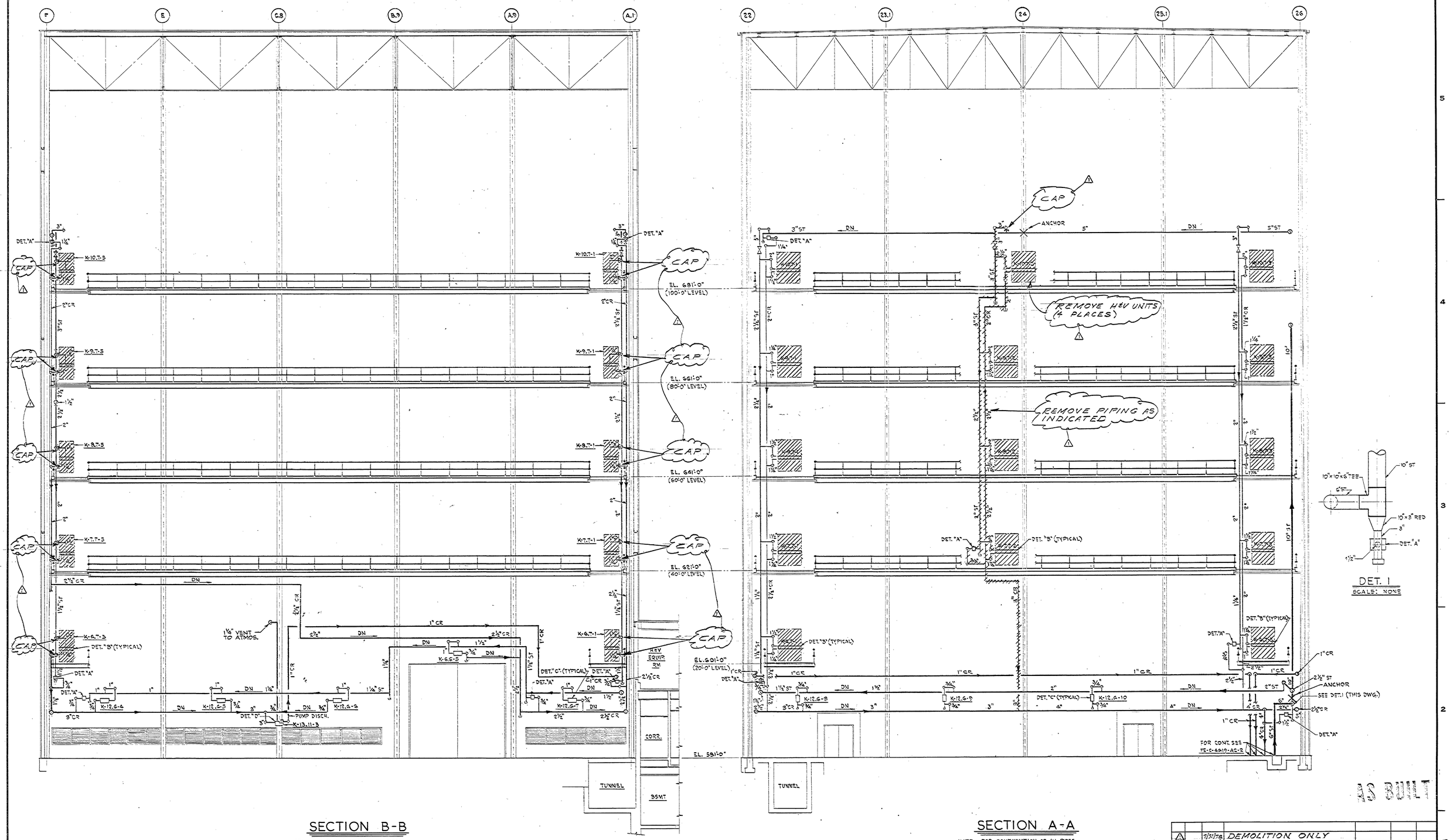

SECTION B-B

NOTE - FOR CONTINUATION OF ALL PIPES AT COL. A.1 SEE SECT. "A-A" AT COL. 22 ON THIS DWG.
- FOR CONTINUATION OF ALL PIPES AT COL. F SEE SECT. "C-C" AT COL. 22 ON FE-C-4619-AC-7.

SECTION A-A

NOTE - FOR CONTINUATION OF ALL PIPES AT COL. 22 SEE SECT. "D-D" AT COL. A.1 ON FE-C-4619-AC-7.
- FOR CONTINUATION OF ALL PIPES AT COL. 22 SEE SECT. "B-B" AT COL. A.1 ON THIS DWG.

NOTES:
1. FOR LEGEND & ABBREVIATIONS SEE FE-C-4619-AC-1
2. FOR HEATING COIL, UNIT HEATER, CONDENSATE RECEIVER & PUMP AND EMD PIPING CONNECTION DETAILS SEE FE-C-4619-AC-8.
3. 4-ELBOW SWING CONNECTIONS SHALL BE MADE TO ALL HEATING COILS, UNIT HEATERS AND DOWNFEED & HORIZONTAL STEAM SUPPLY BRANCH MAINS.

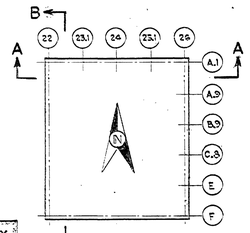

DET. 1
SCALE: NONE

APPROVED FOR SAFETY
OCT 21 1962
DATE

AS BUILT

REV.	BY	DATE		C.I. NO.	APPROVED
1		7/31/78	DEMOLITION ONLY		

NATIONAL AERONAUTICS AND SPACE ADMINISTRATION — M S F C — HUNTSVILLE, ALABAMA

VITRO ENGINEERING COMPANY A DIVISION OF VITRO CORPORATION OF AMERICA — NEW YORK

ADDITION TO BLDG. 4619-LOAD TEST ANNEX
HVAC - PIPING
HIGH BAY - NORTH & WEST ELEV'S

NASA AE CONT. NO.

FILE NO. MSFC 7424

SUBMITTED: CHIEF, DES. SECT. — DATE: SEP 19, 1962

AE — DATE: SEP 19, 1962

APPROVAL RECOMMENDED: L&R — DATE: 10-25-62

APPROVED: CHIEF, ENGINEERING BRANCH — NASA DATE: 10-25-62

DESIGNED M.K. DRAWN Fano CHECKED M. PEPE

APPROVAL RECOMMENDED: CHIEF, DESIGN SECTION — DESIGN DATE: OCT 24 1962

SCALE: 1/8" = 1'-0"

SPEC. NO. FE-D-303

DRWG. NO. FE-C-4619-AC-9

MSFC MASTER BID DISK 11-18-2013

FORM No. 1000.807-0

AIR CONDITIONING UNITS

Unit No.	Location Elev.	Location Col.	CFM	Fan S.P. In.W.G.	Fan Max. O.V. FPM	Fan Disch.	Fan Rotation	Motor HP	Motor RPM	Motor Volts	Motor Phase	Motor Cycle
K-2.2-1	Equip. Rm.	22.7&Y	12000	2.00	1760	UB	CCW	7-1/2	1750	440	3	60
K-3.2-1	Equip. Rm.	22.7&X	5800	2.50	1700	UB	CW	5	1750	440	3	60

Unit No.	Heating Coil Total BTU/HR	Air Temp. °F. Ent.	Air Temp. °F. Leave	Steam PSIG	Min.F.A. Sq.Ft.	Tube Length In.	Max. Air Res. In.W.G.	Cond. P.P.H.	Trap Size
K-2.2-1	-	-	-	-	-	-	-	-	-
K-3.2-1	220,000	45	80	5	10.8	51	0.10	230	1"

Unit No.	Cooling Coils Total BTU/HR	Entering Air °F DB	Entering Air °F WB	Leaving Air °F DB	Leaving Air °F WB	Chilled Water °F Ent.	Chilled Water °F Leav.	Chilled Water GPM	Chilled Water P.D.Ft.	Min.F.A. Sq. Ft.	Tube Length In.	Max. Air Res. In.W.G.	Arrangement High	Arrangement Wide	No. of Coils
K-2.2-1	377,000	79.6	65.2	56.0	55.0	46	56	76	10	21.9	87	0.75	1	1	1
K-3.2-1	167,000	77.1	64.4	56.0	55.0	46	56	34	3	10.8	51	0.70	1	1	1

Unit No.	GPM	Head Ft.H_2O	HP	Volts	Phase	Cycle
K-2.2-1	19	31	1/3	120	1	60
K-3.2-1	12	29	1/3	120	1	60

HEATING & VENTILATING UNITS

Unit No.	Location Elev.	Location Col.	CFM	Fan S. P.* IN.W.G.	Fan Max.O.V. FPM	Fan No. of Nozzles	Fan DISCH.	Fan Rotation	Motor HP	Motor RPM	Motor Volts	Motor Phase	Motor Cycle
K-1.7-1	Bsm't	23.1	10000	0.75	1460	2	BH	CCW	3	1750	440	3	60
K-6.7-1	20.0'	22&A.1	1800	0.75	1160	1	DB	CCW	1/2	1750	440	3	60
K-6.7-2	Equip Rm	24&A.1	3000	0.75	1300	1	TB	CW	3/4	1750	440	3	60
K-6.7-3	20.0'	26&A.1	1500	0.75	970	1	DB	CW	1/2	1750	440	3	60
K-6.7-4	20.0'	26&F	2100	0.75	1360	1	DB	CCW	3/4	1750	440	3	60
K-6.7-5	20.0'	22&F	1800	0.75	1160	1	DB	CW	1/2	1750	440	3	60
K-7.7-1	40.0'	22&A.1	1800	0.75	1160	1	DB	CCW	1/2	1750	440	3	60
K-7.7-2	40.0'	24&A.1	3000	0.75	1300	1	DB	CCW	3/4	1750	440	3	60
K-7.7-3	40.0'	26&A.1	1800	0.75	1160	1	DB	CW	1/2	1750	440	3	60
K-7.7-4	40.0'	26&F	1800	0.75	1160	1	DB	CCW	1/2	1750	440	3	60
K-7.7-5	40.0'	22&F	1800	0.75	1160	1	DB	CW	1/2	1750	440	3	60
K-8.7-1	60.0'	22&A.1	1800	0.75	1160	1	DB	CCW	1/2	1750	440	3	60
K-8.7-2	60.0'	24&A.1	3000	0.75	1300	1	DB	CCW	3/4	1750	440	3	60
K-8.7-3	60.0'	26&A.1	1800	0.75	1160	1	DB	CW	1/2	1750	440	3	60
K-8.7-4	60.0'	26&F	1800	0.75	1160	1	DB	CCW	1/2	1750	440	3	60
K-8.7-5	60.0'	22&F	1800	0.75	1160	1	DB	CW	1/2	1750	440	3	60
K-9.7-1	80.0'	22&A.1	1500	1.00	1810	1	DB	CCW	3/4	1750	440	3	60
K-9.7-2	80.0'	24&A.1	3000	0.75	1300	1	DB	CCW	3/4	1750	440	3	60
K-9.7-3	80.0'	26&A.1	1500	1.00	1810	1	DB	CW	3/4	1750	440	3	60
K-9.7-4	80.0'	26&F	1500	1.00	1810	1	DB	CCW	3/4	1750	440	3	60
K-9.7-5	80.0'	22&F	1500	1.00	1810	1	DB	CW	3/4	1750	440	3	60
K-9.7-6	80.0'	24&F	3000	0.75	1300	1	DB	CW	3/4	1750	440	3	60
K-10.7-1	100.0'	22&A.1	4200	1.00	1830	1	DB	CCW	1-1/2	1750	440	3	60
K-10.7-2	100.0'	24&A.1	7800	0.75	1700	2	DB	CCW	2	1750	440	3	60
K-10.7-3	100.0'	26&A.1	4200	1.00	1830	1	DB	CW	1-1/2	1750	440	3	60
K-10.7-4	100.0'	26&F	4200	1.00	1830	1	DB	CCW	1-1/2	1750	440	3	60
K-10.7-5	100.0'	22&F	4200	1.00	1830	1	DB	CW	1-1/2	1750	440	3	60
K-10.7-6	100.0'	24&F	7800	0.75	1700	2	DB	CW	2	1750	440	3	60

Unit No.	Filters Size	Filters Max.Res. Clean In.W.G.	Filters No. Of Filters	Heating Coil Total BTU/HR	Air Temp. °F. Ent.	Air Temp. °F. Leave	Steam PSIG	Min.F.A. Sq. Ft.	Tube Length Inches	Max. Air Res. In.W.G.	Cond. P.P.H.	Trap Size Inches	REMARKS
K-1.7-1	16x20	0.10	18	119,000	64	75	5	21.0	87	0.04	124	1	
K-6.7-1	16x20	0.11	4	160,500	51	134	5	4.5	36	0.10	162	1	
K-6.7-2	16x20	0.10	6	254,000	51	130	5	6.1	45	0.14	265	1-1/4	
K-6.7-3	16x20	0.11	4	123,000	51	127	5	3.5	36	0.10	128	1	
K-6.7-4	16x20	0.11	4	183,300	51	132	5	4.5	36	0.12	191	1	
K-6.7-5	16x20	0.11	4	160,500	51	134	5	4.5	36	0.10	162	1	
K-7.7-1	16x20	0.11	4	160,500	51	134	5	4.5	36	0.10	162	1	
K-7.7-2	16x20	0.10	6	252,300	51	129	5	6.1	45	0.14	264	1-1/4	
K-7.7-3	16x20	0.11	4	160,500	51	134	5	4.5	36	0.10	162	1	
K-7.7-4	16x20	0.11	4	160,500	51	134	5	4.5	36	0.10	162	1	
K-7.7-5	16x20	0.11	4	160,500	51	134	5	4.5	36	0.10	162	1	
K-8.7-1	16x20	0.11	4	160,500	51	134	5	4.5	36	0.10	162	1	
K-8.7-2	16x20	0.10	6	252,300	51	129	5	6.1	45	0.14	264	1-1/4	
K-8.7-3	16x20	0.11	4	160,500	51	134	5	4.5	36	0.10	162	1	
K-8.7-4	16x20	0.11	4	160,500	51	134	5	4.5	36	0.10	162	1	
K-8.7-5	16x20	0.11	4	160,500	51	134	5	4.5	36	0.10	162	1	
K-9.7-1	16x20	0.11	4	130,500	51	132	5	2.9	33	0.20	136	1	
K-9.7-2	16x20	0.10	6	252,300	51	129	5	6.1	45	0.14	264	1-1/4	
K-9.7-3	16x20	0.11	4	130,500	51	132	5	2.9	33	0.20	136	1	
K-9.7-4	16x20	0.11	4	130,500	51	132	5	2.9	33	0.20	136	1	
K-9.7-5	16x20	0.11	4	130,500	51	132	5	2.9	33	0.20	136	1	
K-9.7-6	16x20	0.10	6	252,300	51	129	5	6.1	45	0.14	264	1-1/4	
K-10.7-1	16x25	0.10	6	357,000	51	130	5	7.4	45	0.20	383	1-1/4	
K-10.7-2	16x20	0.11	16	675,000	51	131	5	15.2	75	0.15	705	1-1/2	
K-10.7-3	16x25	0.10	6	357,000	51	130	5	7.4	45	0.20	383	1-1/4	
K-10.7-4	16x25	0.10	6	357,000	51	130	5	7.4	45	0.20	383	1-1/4	
K-10.7-5	16x25	0.10	6	357,000	51	130	5	7.4	45	0.20	383	1-1/4	
K-10.7-6	16x20	0.11	16	675,000	51	131	5	15.2	75	0.15	705	1-1/2	

* INDICATES TOTAL STATIC

UNIT HEATERS

Unit No.	Room	Level Ft.	Col.	Type	CFM	Capacity BTU/hr	Cond. Lbs./hr	Motor HP
K-5.6-1	Equip Rm	-	23.9-X	Hor.	710	53,000	55	1/20
K-5.6-2	Equip Rm	-	23.9-X	Hor.	710	53,000	55	1/20
K-5.6-3	Equip Rm	-	23.5-A.1	Hor.	710	53,000	55	1/20
K-5.6-4	Equip Rm	-	23.5-A.1	Hor.	710	53,000	55	1/20
K-5.6-5	Equip Rm	-	22-Y	Hor.	710	53,000	55	1/20
K-5.6-6	Equip Rm	-	22-Y	Hor.	710	53,000	55	1/20
K-6.6-1	High Bay	20	25	Hor.	710	45,500	48	1/20
K-6.6-2	High Bay	20	23	Hor.	710	45,500	48	1/20
K-6.6-3	High Bay	20	B.9	Hor.	400	15,000	16	7 Watts
K-6.6-4	High Bay	20	C.8	Hor.	400	15,000	16	7 Watts
K-6.6-5	High Bay	20	A.9-B.9	Vert.	1855	60,000	63	1/6
K-7.6-1	High Bay	40	25	Hor.	710	45,500	48	1/20
K-7.6-2	High Bay	40	23	Hor.	710	45,500	48	1/20
K-7.6-3	High Bay	30	B.9-C.8	Vert.	1250	45,500	48	1/8
K-8.6-1	High Bay	60	25	Hor.	710	45,500	48	1/20
K-8.6-2	High Bay	60	23	Hor.	710	45,500	48	1/20
K-12.6-1	High Bay	12	25	Hor.	710	45,500	48	1/20
K-12.6-2	High Bay	12	23	Hor.	710	45,500	48	1/20
K-12.6-3	High Bay	12	23-22	Vert.	1250	46,500	49	1/8
K-12.6-4	High Bay	12	F-E	Vert.	1025	40,800	43	1/20
K-12.6-5	High Bay	12	E-C.8	Vert.	1025	40,800	43	1/20
K-12.6-6	High Bay	12	C.8-B.9	Vert.	1025	40,800	43	1/20
K-12.6-7	High Bay	12	A.9-A.1	Vert.	1025	40,800	43	1/20
K-12.6-8	High Bay	12	22-23.1	Hor.	400	15,600	17	7 Watts
K-12.6-9	High Bay	12	23.1-24	Hor.	400	15,600	17	7 Watts
K-12.6-10	High Bay	12	24-25.1	Hor.	400	15,600	17	7 Watts
K-12.6-11	High Bay	12	A.1-A.9	Vert.	1025	40,800	43	1/20
K-12.6-12	High Bay	12	A.9-B.9	Vert.	1025	40,800	43	1/20
K-12.6-13	High Bay	12	B.9	Hor.	1495	15,000	17	1/8
K-12.6-14	High Bay	12	C.8	Hor.	1495	15,000	17	1/8
K-12.6-15	High Bay	12	C.8-E	Vert.	1025	40,800	43	1/20
K-12.6-16	High Bay	12	E-F	Vert.	1025	40,800	43	1/20
K-12.6-17	High Bay	12	26-25	Vert.	1250	46,500	49	1/8

NOTES:
All trap sizes 3/4" minimum.
All motors 120 volts, 1 phase, 60 cycle.

REFRIGERATION UNIT

Unit No.	Service	Location Fl'r.	Location Col.	Tons Capacity	Chilled Water °F.In	Chilled Water °F.Out	Chilled Water GPM	Chilled Water Max. Drop Ft.	Condenser Water °F.In	Condenser Water °F.Out	Condenser Water GPM	Condenser Water Max. Drop Ft.	Compressor Type	Motor HP	Motor RPM	Motor Volts	Motor Phase	Motor Cycle	Remarks
K-4.9-1	Chilled Water	Bsm't.	23.1&X	54	56.9	45.1	110	13	85	95	162	14	Hermetic	60	1750	440	3	60	

COOLING TOWER

Unit No.	Service	Nominal Capacity GPM	Nominal Capacity °F.In	Nominal Capacity °F.Out	Hd.Loss. Ft.	Design Temp. °F.DB	Design Temp. °F.WB	Fan Motor HP	Fan Motor RPM	Fan Motor Volts	Fan Motor Phase	Fan Motor Cycle	Remarks
K-4.10-1	Cond. Water	210	95	85	9	95	78	3	1750	440	3	60	

CONDENSATE RETURN UNIT

Unit No.	Location Fl'r.	Location Col.	Capacity Lbs. Cond.Per.Hr.	Receiver Cap. Gal.	Type	Pumps No.	Pumps GPM	Pumps Hd.PSIG	Pump Motor No.	Pump Motor HP	Pump Motor RPM	Pump Motor Volts	Pump Motor Phase	Pump Motor Cycle	Remarks
K-13.11-1	Bsm't.	26-A.1	10,000	62	Duplex	2	60	40	2	3	1750	440	3	60	
K-13.11-2	El.10'-0"	26-E	1,000	15	Duplex	2	6	10	2	1/3	1750	120	1	60	
K-13.11-3	El.10'-0"	22-C.8	2,000	15	Duplex	2	12	10	2	1/3	1750	120	1	60	

PUMP

Unit No.	Service	Type	Location Fl'r.	Location Col.	GPM	TDH Feet	Motor HP	Motor RPM	Motor Volts	Motor Phase	Motor Cycle	Remarks
K-4.8-1	Chilled Water	Centrifugal	Bsm't.	North Wall	110	51	3	1750	440	3	60	
K-4.8-2	Condenser Water	Centrifugal	Bsm't.	"	162	35	3	1750	440	3	60	
K-4.8-3	Standby	Centrifugal	Bsm't.	@Col. 23.1	110	51	3	1750	440	3	60	

CENTRIFUGAL FAN

Unit No.	Service	Location Fl'r.	Location Col.	CFM	S.P. IN. W.G.	Max. O.V.FPM	Class	Disch.	Rotation	Arrg't.	Type	Motor HP	Motor RPM	Motor Volts	Motor Phase	Motor Cycle	Motor Position	*Accessories	Remarks
K-1.4-1	Return	Bsm't.	22 &X	8,300	0.375	2000	I	BH	CW	9		2	1800	440	3	60	Z		
K-1.5-1	Exhaust	Tunnel	22 &E	1,250	0.250	1460	I	BH	CW	9		1/4	1800	120	1	60	W	A,B	
K-1.5-2	Exhaust	Tunnel	26 &A.1	450	0.250	2080	I	UB	CW	9		1/6	1800	120	1	60	W	A,B	
K-2.4-1	Return	Fan Loft	23.5&A.1	10,800	0.500	1730	I	UB	CCW	3		2	1800	440	3	60	Z		
K-3.4-1	Return	Fan Loft	23.5&Y	5,200	0.500	1840	I	UB	CW	1		1-1/2	1800	440	3	60	W		
K-5.5-1	Exhaust	Fan Loft	24 &X	2,750	0.125						Propeller	1/4	1800	120	1	60		C, D	
K-5.5-2	Exhaust	Fan Loft	24 &A.1	2,750	0.125						Propeller	1/4	1800	120	1	60		C, D	

* A - Inlet Screen
B - Outlet Damper (GRAVITY TYPE)
C - DISCHARGE SHUTTER, MOTORIZED
D - MOTOR GUARD

FILTERS

Unit No.	Location Fl'r.	Location Col.	CFM	Size-Inches	Max.Resist. Clean In.W.G.	Test Rating	Arrangement High	Arrangement Wide	No. of Units	Remarks
K-2.1-1	Fan Rm.	22&A.1	12000	24x24x24	.32	80% NBS	2	4	8	
K-3.1-1	Fan Rm.	22&X	5800	24x24x24	.32	80% NBS	2	3	6	

HEATING COILS

Unit No.	Location Room	Location Col.	CFM	Total BTU/HR.	Air Temp °F. Ent.	Air Temp °F. Leave	Steam PSIG	Min.Fa. Sq. Ft.	Tube Length	Max. Air Res.In.W.G.	Arrangement High	Arrangement Wide	No. of Coils	Cond. P.P.H.	Trap Size	Remarks
K-2.3-1	Equip. Rm.	23.1-Y	6000	234,000	45	81	5	10.7	48"	.10	1	1	1	250	1"	
K-2.3-2	Equip. Rm.	23.1-Y	6000	227,000	45	80	5	10.7	48"	.10	1	1	1	240	1"	

AS BUILT

REV.	BY	DATE		C. I. NO.	APPROVED

NATIONAL AERONAUTICS AND SPACE ADMINISTRATION — MSFC, HUNTSVILLE, ALABAMA

VITRO ENGINEERING COMPANY A DIVISION OF VITRO CORPORATION OF AMERICA NEW YORK

ADDITION TO BLDG. 4619 - LOAD TEST ANNEX

HVAC - EQUIPMENT SCHEDULE

NASA AE CONT. NO. | FILE NO. MSFC 7425

SUBMITTED: H.L. Meyer, CHIEF DES. ENGR. 9-10-62
AE. DATE: SEP. 14, 1962
APPROVAL RECOMMENDED: LAB. DATE: 10-22-62
APPROVED: CHIEF, ENGINEERING BRANCH; NASA DATE: 10-25-62
DESIGNED M.K.
DRAWN N.PEPE
CHECKED M.K.
APPROVAL RECOMMENDED: CHIEF, DESIGN SECTION
DESIGN DATE: OCT 29 1962
SCALE: NO SCALE
SPEC. NO. FE-D-303
DRWG. NO. FE-C-4619-AC-10

APPROVED FOR SAFETY OCT 30 1962 DATE

MSFC MASTER BID DISK 11-18-2013

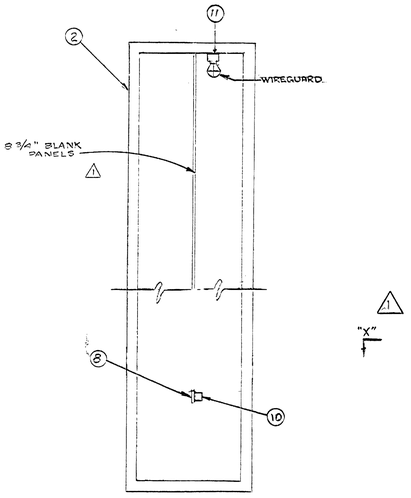

SECTION "Y-Y"

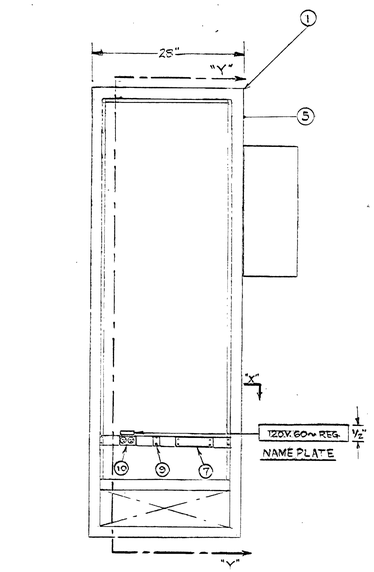

FRONT VIEW
(DOORS REMOVED)

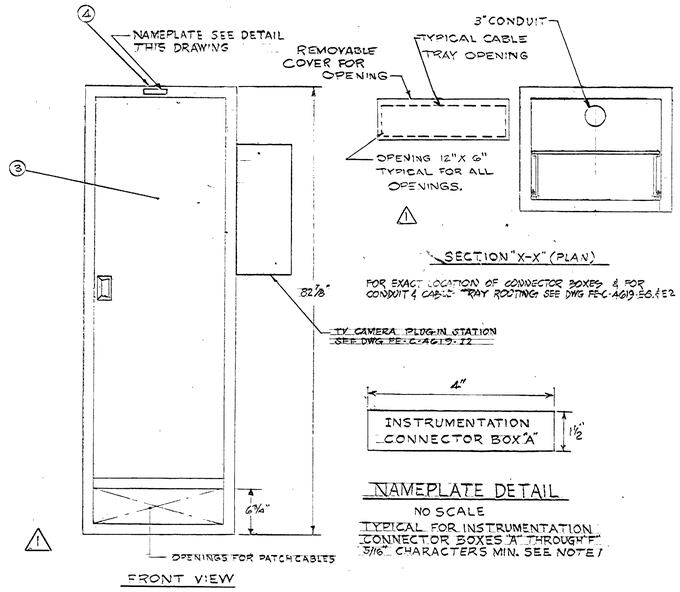

SECTION "X-X" (PLAN)

FOR EXACT LOCATION OF CONNECTOR BOXES & FOR CONDUIT & CABLE TRAY ROUTING SEE DWG FE-C-4619-E6 & E2

FRONT VIEW

NAMEPLATE DETAIL

NO SCALE

TYPICAL FOR INSTRUMENTATION CONNECTOR BOXES "A" THROUGH "F" 5/16" CHARACTERS MIN. SEE NOTE 1

CONNECTOR BOX

6 REQUIRED

SCALE: 1"=1'

BILL OF MATERIAL				
ITEM NO.	QUANTITY	DESCRIPTION	MFGR.	MFGR. NO.
1	1	HEAVY DUTY VERTICAL FRAME	EMCOR	FRM-28-1924
2	1	16GA.C.R.S. REAR PANEL	EMCOR	PN-78-24
3	1	16GA.C.R.S. FRONT DOOR	EMCOR	DDH 70C-24
4	2	16GA.C.R.S. TOP & BOTTOM PANEL	EMCOR	PNH 1924
5	2	16GA.C.R.S. SIDE PANELS	EMCOR	PN-78
7	1	20 POINT TERMINAL BLOCKS 12 POINTS FOR 4 2 WIRE	MARATHON	SERIES 12000
8	1	TERMINAL BLOCK MOUNTING CHANNEL		
9	1	20A 250 VOLT FUSE WITH HOLDER	G.E.	GE8411-3
10	1	DUPLEX RECEPTACLE W/BOX	HUBBLE	5652
11	1	PORCELAIN LAMP RECEPTACLE WITH WIRE GUARD	BRYANT	93

* EACH CONNECTOR BOX – SIX (6) CONNECTOR BOXES REQUIRED

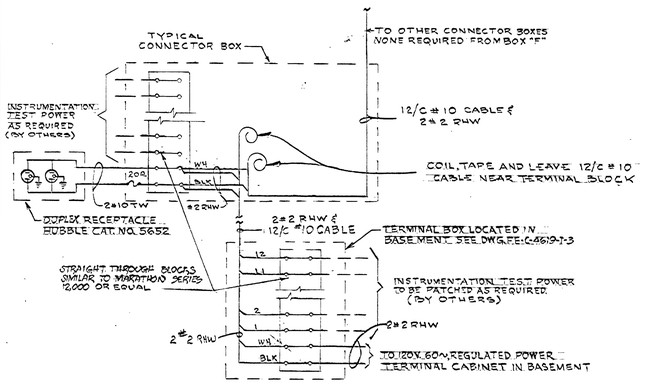

SCHEMATIC DIAGRAM
GENERAL PURPOSE CIRCUITS

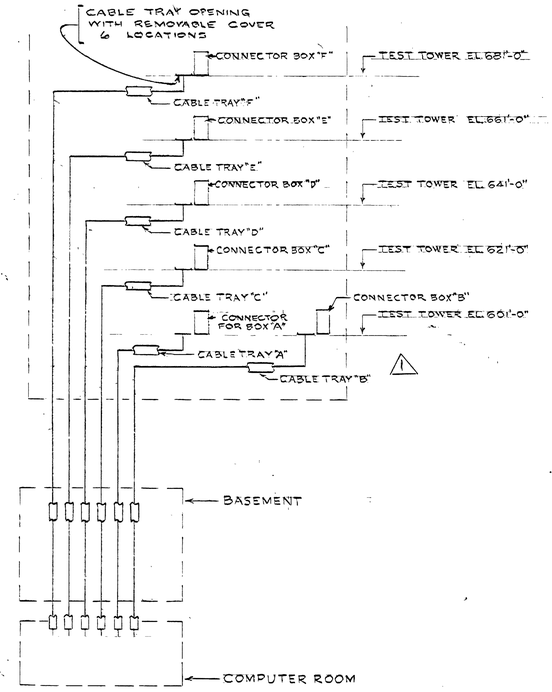

MULTI CHANNEL INSTRUMENTATION SYSTEM RISER DIAGRAM

GENERAL NOTES:

1. NAMEPLATES SHALL BE 1/16" LAMINATED PLASTIC, BLACK FACE WHITE CORE - G.E. CO. GRADE 222 PANALYTE OR EQUAL.
2. PANELS, CABINETS, BOXES, ETC., SHALL BE FINISHED WITH ONE COAT OF RUST INHIBITING PRIMER AND TWO FINISH COATS OF LACQUER. FINAL COLOR SHALL CONFORM TO FEDERAL STANDARD NO. 595, SEMIGLOSS GRAY, COLOR CHIP NO. 26132.
3. REFERENCE TO MANUFACTURERS ARE USED TO ESTABLISH TYPE OF EQUIPMENT ONLY. EQUIPMENT BY OTHER MANUFACTURERS MAY BE USED WHEN EQUAL & SUITABLE FOR THE PURPOSE.

REFERENCE DRAWINGS:

FE-C-4619-I-2	INSTRUMENTATION - TELEVISION & COMMUNICATIONS SYSTEM
FE-C-4619-T-3	INSTRUMENTATION - ELECTRONIC TEST BENCH DETAILS & WIRING
FE-C-4619-E2	ELECTRICAL - CONDUIT & GND. B'MT PLAN, SECTS & DETS
FE-C-4619-E6	ELECTRICAL - LIGHTING & POWER PLAN - TEST AREA
FE-C-4619-E8	ELECTRICAL - TROUGH DETAILS - NE & NW TOWER

AS BUILT

REV.	BY	DATE		C.I. NO.	APPROVED
1	JWS	4-2-63	DELETED LEFT SIDE CONNECTOR BOX IN LOCATIONS A, B, C, D, & E	5560-3	EB

NATIONAL AERONAUTICS AND SPACE ADMINISTRATION — M S F C, HUNTSVILLE, ALABAMA

VITRO ENGINEERING COMPANY A DIVISION OF VITRO CORPORATION OF AMERICA NEW YORK

ADDITION TO BUILDING 4619 - LOAD TEST ANNEX

INSTRUMENTATION

CONNECTOR BOX DETAILS & WIRING

NASA AE CONT. NO. NASA 8-2145		FILE NO. MSFC 7452
SUBMITTED: H. H. Meyer, CHIEF, DES. ENGR. 9-13-62	APPROVAL RECOMMENDED: G. J. Langer, LAB. DATE: 10-22-62	APPROVED: W. H. Weber, CHIEF, ENGINEERING BRANCH, NASA DATE: 10-25-62
AS: DATE: SEP. 14, 1962		
DESIGNED: E. LYKINS & B. SHUBERT; DRAWN; CHECKED	APPROVAL RECOMMENDED: E. W. Livingston, CHIEF, DESIGN SECTION; DESIGN DATE: 10-24-62	DRWG. NO. FE-C-4619-I-1
SCALE: AS NOTED	SPEC. NO.: FE-10-303	

Approved For Safety, Oct 30 1962, Safety Office

MSFC MASTER BID DISK 11-18-2013

MSFC-FORM 232 (REV. DEC., 1960)

GOLDEN PRESS, INC., BROOKLYN, N.Y. STOCK NO. 440

FORM No. 1000.807-0

10" W x 24" H x 12" D SCREW COVER PULL BOX - NO 12 GA STEEL COLUMBIA METAL BOX CO.

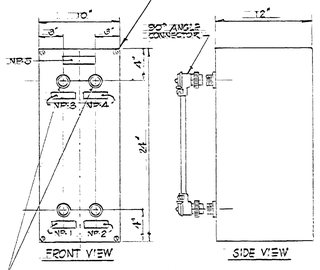

THESE CONNECTORS NOT REQUIRED ON CAMERA PLUG-IN STATIONS LOCATED AT CONNECTOR BOX "E"

NAMEPLATE LEGEND		
NP	FIRST LINE	SECOND LINE
1	CHANNEL 1	CAMERA INPUT
2	DO NOT REMOVE	——
3	CHANNEL 2	CAMERA INPUT
4	DO NOT REMOVE	——
5	CLOSED CIRCUIT	TELEVISION SYSTEM

NAMEPLATES SHALL BE 1½"H X 4"L WITH 5/16" MINIMUM CHARACTERS SEE NOTE 1, DWG. FE-C-4619-I-1

CAMERA PLUG-IN STATIONS TO BE MOUNTED ON INSTRUMENTATION CONNECTOR BOX 59 - SEE DWG FE-C-4619-I-1

CLOSED CIRCUIT TELEVISION SYSTEM CAMERA PLUG-IN STATION

SCALE: ½" = 1'-0"

NOTE A

INSTALL CONDUIT BETWEEN PLUG-IN STATIONS FOR TV INTERCONNECTING CABLE. SEE RISER ON DWG E-3.

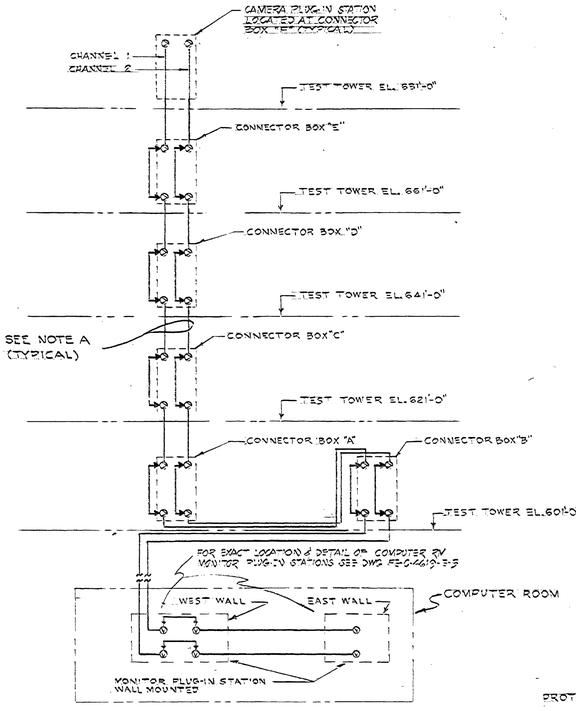

CLOSED CIRCUIT TELEVISION RISER DIAGRAM

ALL CABLE & CABLE CONNECTORS ARE FURNISHED BY CLOSED CIRCUIT TELEVISION SYSTEM SUPPLIER.

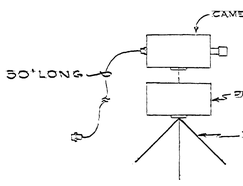

PORTABLE CAMERA STATION

(TWO REQUIRED - LOCATED ON TEST TOWER)

NO SCALE

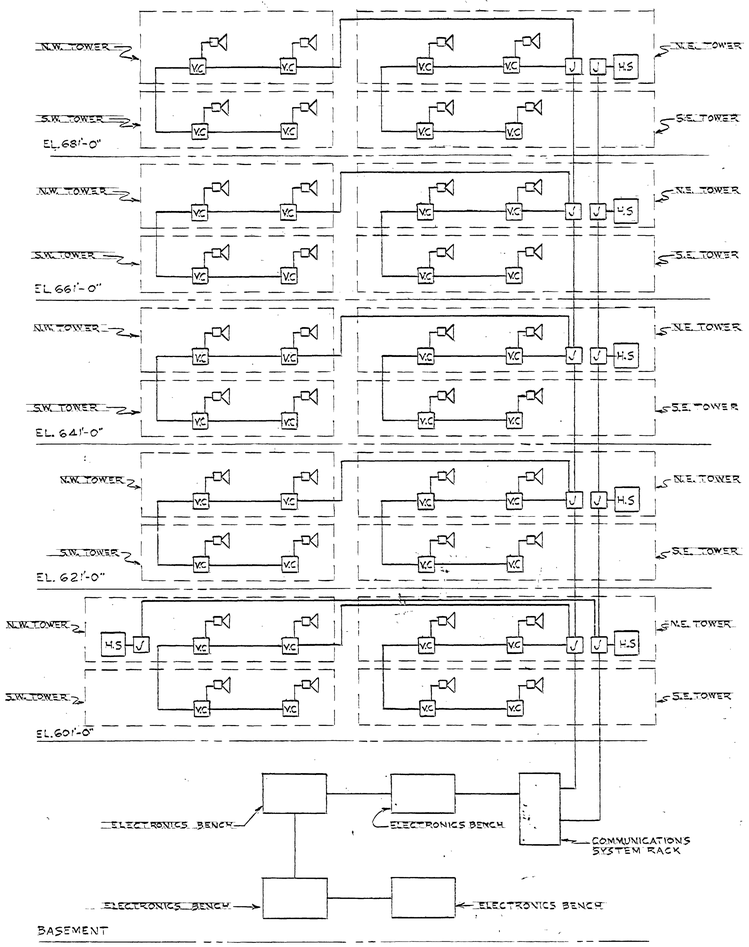

COMMUNICATIONS SYSTEM RISER DIAGRAM

FOR EXACT EQUIPMENT LOCATION & CABLE ROUTING SEE DWG. FE-C-4619-EG

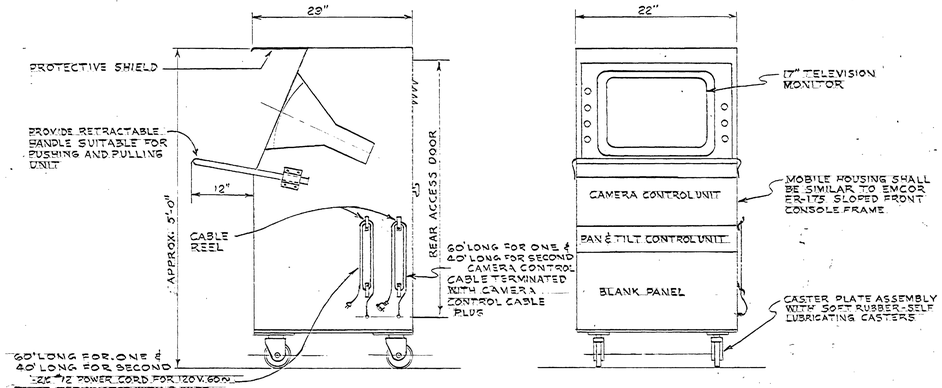

CLOSED CIRCUIT TELEVISION SYSTEM MOBILE MONITOR AND CONTROL CONSOLE

(TWO REQUIRED - LOCATED IN COMPUTER ROOM)

NO SCALE

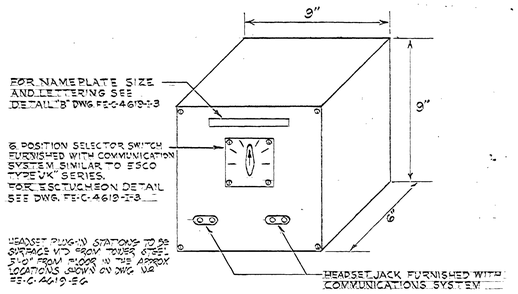

DETAIL "D"

COMMUNICATIONS SYSTEM HEADSET CONNECTOR BOX SIX(6) REQUIRED

SCALE: 3" = 1'-0"

LEGEND AND SYMBOLS

- J — JUNCTION BOX 4½" X 3" X 4" COLUMBIA TYPE "A" SURFACE MOUNTED, WITH KULKA ELECTRIC TERMINAL BLOCKS, TWO 2-8TB6 M.
- PAGE SYSTEM SPEAKER
- VC — VOLUME CONTROL UNIT
- H.S — HEADSET PLUG-IN STATION

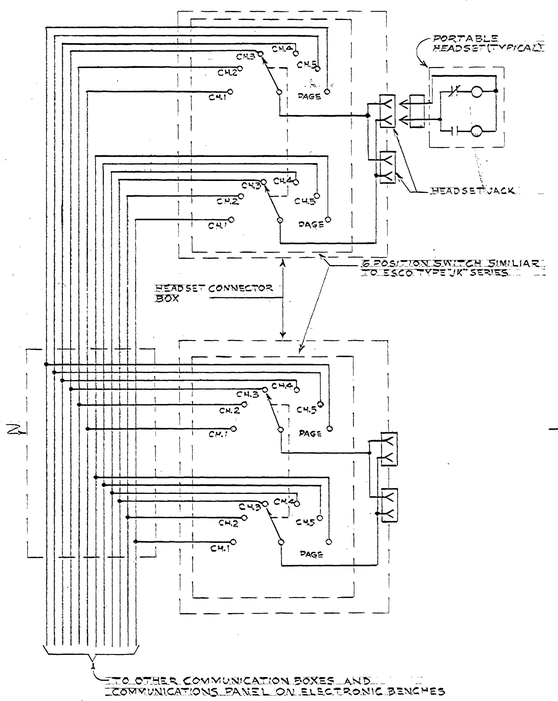

COMMUNICATIONS SYSTEM SCHEMATIC DIAGRAM

ALL CABLE, SWITCHES, JACKS, ETC ARE FURNISHED BY COMMUNICATIONS SYSTEM SUPPLIER.

NOTES:

1. FOR CLOSED CIRCUIT TELEVISION SYSTEM DESCRIPTION AND EQUIPMENT SPECIFICATIONS SEE SECTION 28 OF THE SPECIFICATIONS.
2. FOR COMMUNICATIONS SYSTEM DESCRIPTION AND REQUIREMENTS SEE SECTION 28 OF THE SPECIFICATIONS.
3. FOR GENERAL NOTES AND REFERENCE DRAWINGS SEE DWG NO FE-C-4619-I-1

AS BUILT

REV.	BY	DATE	C. & M. NO.	APPROVED

NATIONAL AERONAUTICS AND SPACE ADMINISTRATION — M S F C — HUNTSVILLE, ALABAMA

VITRO ENGINEERING COMPANY A DIVISION OF VITRO CORPORATION OF AMERICA — NEW YORK

ADDITION TO BUILDING 4619-LOAD TEST ANNEX

INSTRUMENTATION

TELEVISION & COMMUNICATIONS SYSTEM

NASA AE CONT. NO. NASA 8-2145 — FILE NO. MSFC 7453

SUBMITTED: CHIEF DES. ENGR. — APPROVAL RECOMMENDED: — APPROVED: CHIEF, ENGINEERING DIVISION

AE DATE: SEP 14, 1962 — LAB. DATE: 10-22-62 — NASA DATE: 10-25-62

DESIGNED: DRAWN: E. LYKINS CHECKED: A.R. — APPROVAL RECOMMENDED: CHIEF, DESIGN SECTION — DESIGN DATE: 10-24-62 — DRWG. NO. FE-C-4619-I-2

SCALE: AS NOTED — SPEC. NO. PE-D-303

APPROVED FOR SAFETY — OCT 20 1962 — DATE

MSFC MASTER BID DISK 11-18-2013

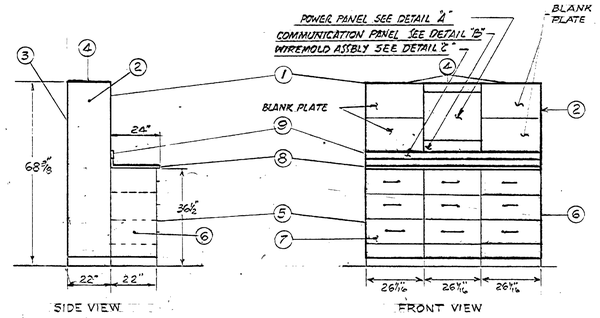

ELECTRONICS BENCH

4 REQUIRED

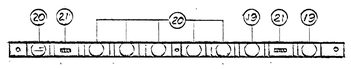

WIREMOLD ASSEMBLY
DETAIL "C"
No Scale

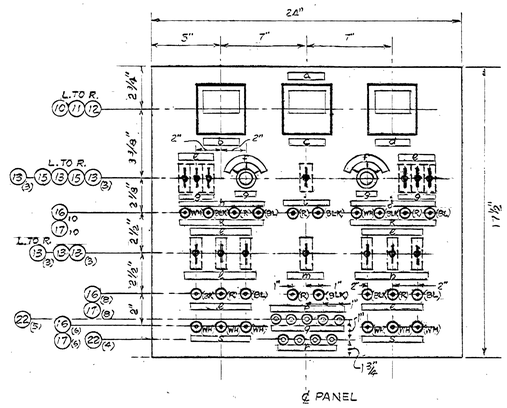

POWER PANEL
DETAIL "A"

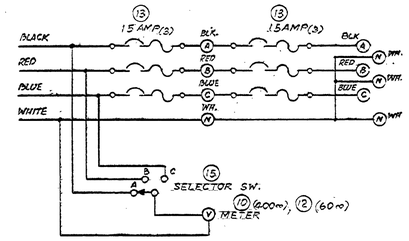

UNREG. 400 CYCLE WIRING DIAGRAM
(SIMILAR 60 CYCLE WIRING DIAGRAM)

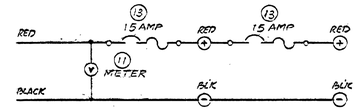

DC WIRING DIAGRAM

POWER PANEL-DIAGRAMS

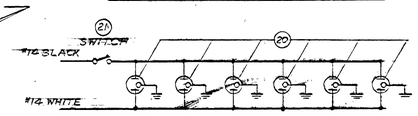

REGULATED 60~115 VOLTS

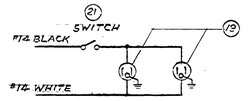

UNREGULATED 60~115 VOLTS

WIREMOLD SCHEMATIC

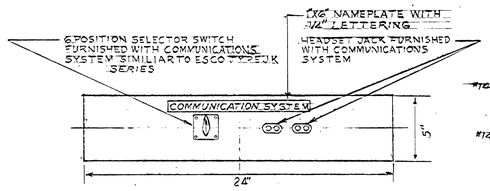

COMMUNICATION PANEL
DETAIL "B"

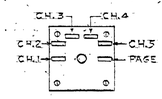

ESCUTCHEON FOR COMMUNICATIONS
SYSTEM SELECTOR SWITCHES

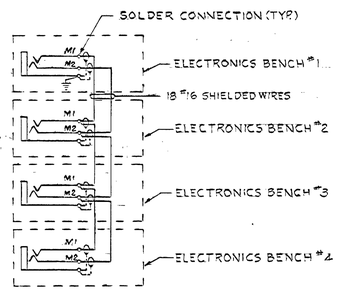

MEASURING LINE WIRING DIAGRAM
TYPICAL FOR NINE JACKS

BILL OF MATERIALS				
ITEM NO.	QUANTITY	DESCRIPTION	MFR.	MODEL NO.
1	3	RELAY HEAVY DUTY VERTICAL FRAME	EMCOR	ER22GA
2	2	16GA. CRS SIDE PANELS	EMCOR	SP26ARD
3	3	16GA. CRS REAR PANELS	EMCOR	
4	6	TOP & BOTTOM PANELS	EMCOR	
5	3	ELECTRONIC BENCH FRAMES	EMCOR	ER21SA
6	2	ELECTRONIC BENCH SIDE PNL	EMCOR	SP15A
7	3	ELECTRONIC BENCH DRAWERS	EMCOR	DR8N-24-22
8	1	BENCH TOP 1½ THK. MAPLE		
9	1	WIREMOLD ASSEMBLY	WIREMOLD	
10	1	METER 0-150 VAC. 400 CYC	WESTON	301
11	1	METER 0-50 V. DC	WESTON	301
12	1	METER 0-150 VAC 60 CYC	WESTON	301
13	14	CIRCUIT BREAKER	HEINEMANN	X0411TS
14				
15	2	SWITCH WITH (KNOB-ROUND SKIRTED)	CENTRALAB	PA2043
16	24	SOCKET RECEPTACLE	STD. ELEC. TIME CO.	RE-25
17	24	PIN PLUG	STD. ELEC. TIME CO.	PL-2P
18				
19	2	RECEPTACLE 3-WIRE GROUND TYPE	WIREMOLD	2127GA
20	6	RECEPTACLE 3-WIRE GROUND TYPE	WIREMOLD	2127GB
21	2	SWITCH, SINGLE POLE	WIREMOLD	2140
22	9	JACK WITH FIBRE WASHER	SWITCHCRAFT	JJ022

* EACH ELECTRONIC BENCH FOUR (4) REQUIRED

NAME PLATE SCHEDULE	
NAME PLATE	DESCRIPTION
a	POWER PANEL
b	400 CYCLE MONITOR
c	DC LINE MONITOR
d	60 CICLE MONITOR
e	A B C
f	A B C
g	PHASE
h	400 CYCLE 15 AMP
i	DC 15 AMP
j	60 CYCLE 15 AMP
k	N A B C
l	400 CYCLE 15 AMP
m	DC 15 AMP
n	60 CYCLE 15 AMP
p	MEASURING LINES
q	1 2 3 4 5
r	6 7 8 9
s	N. N N

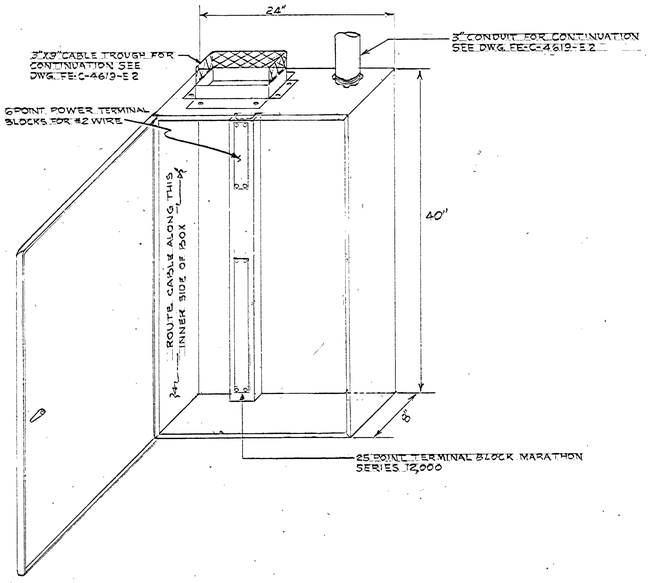

TERMINAL BOX DETAIL

ONE (1) REQUIRED
SCALE: 1½"=1'-0"

NOTE: TERMINAL BOX TO BE MADE OF 14GA. SHEET STEEL WITH HINGED DOOR SUITABLE FOR SURFACE MOUNTING.

NOTES:

1. FOR LOCATION OF ELECTRONIC BENCHES SEE DRAWING FE-C-4619-E-2
2. FOR GENERAL NOTES AND REFERENCE DRAWINGS SEE DWG NO FE-C-4619-I-1.

AS BUILT

REV.	BY	DATE		C.I. NO.	APPROVED

NATIONAL AERONAUTICS AND SPACE ADMINISTRATION — M S F C HUNTSVILLE, ALABAMA

VITRO ENGINEERING COMPANY A DIVISION OF VITRO CORPORATION OF AMERICA NEW YORK

ADDITION TO BUILDING 4619-LOAD TEST ANNEX
INSTRUMENTATION
ELECTRONIC TEST BENCH DETAILS & WIRING

NASA AE CONT. NO. NASA 8-2145 — FILE NO. MSFC 7454

SUBMITTED: H.R. Hogan, CHIEF DES. ENGR. 9-13-62; AE: DATE: SEP. 14, 1962
APPROVAL RECOMMENDED: [signature]; LAB: DATE: 10-22-62
APPROVED: [signature], CHIEF, ENGINEERING BRANCH; NASA: DATE: 10-5-62
DESIGNED B LYONS; DRAWN; CHECKED H.R.
APPROVAL RECOMMENDED: E. D. Cunningham, CHIEF, DESIGN SECTION; DESIGN DATE: 10-24-62
SCALE: AS NOTED; SPEC. NO. FR-D-303
DRWG. NO. FE-C-4619-I-3

APPROVED FOR SAFETY [signature] OCT 20 1962 DATE
NASA SAFETY OFFICE

MSFC MASTER BID DISK 11-18-2013

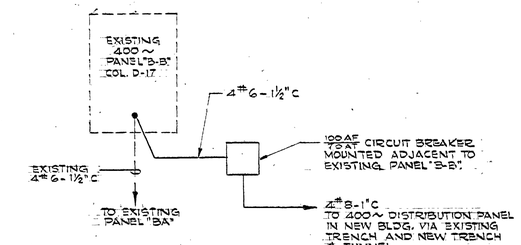

400~ RISER

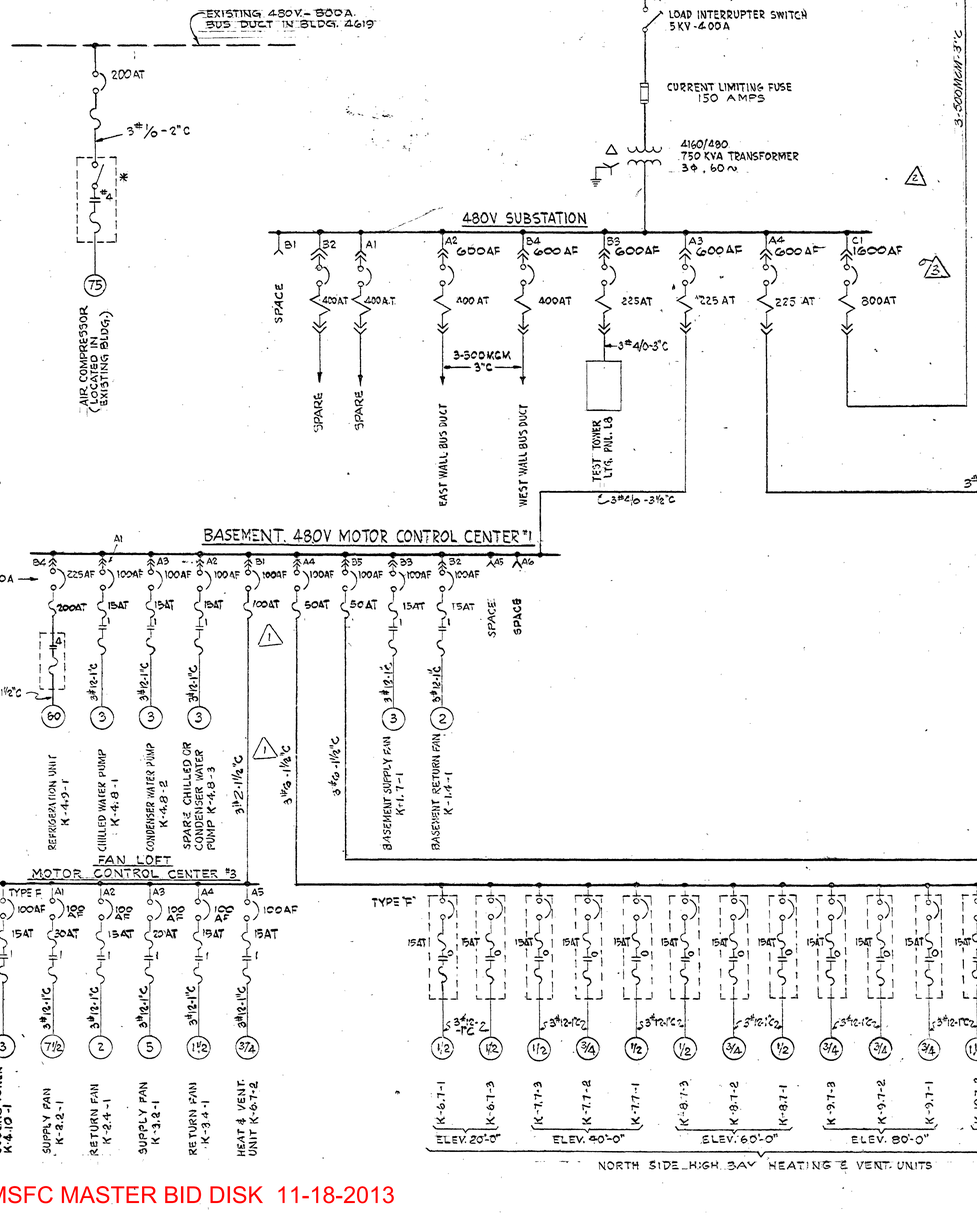

SYMBOLS

- DISCONNECT TYPE POWER FUSE
- LIGHTNING ARRESTER
- POWER TRANSFORMER. KVA CONTINUOUS RATING, VOLTAGE RATIO, FREQUENCY, NUMBER OF PHASES, ETC. AS INDICATED.
- POTENTIAL TRANSFORMER WITH FUSES. NUMBER IN PARENTHESIS INDICATES QUANTITY. 4160/120 DENOTES VOLTAGE RATIO.
- CURRENT TRANSFORMER, SINGLE SECONDARY, NUMBER IN PARENTHESIS INDICATES QUANTITY. 150/5 DENOTES AMP RATIO.
- WH KILOWATT-HOUR METER
- AS AMMETER SWITCH
- A AMMETER
- DISCONNECT DEVICE, DRAW-OUT TYPE.
- 100A / 50A DISCONNECT OR SAFETY SWITCH, FUSED. NUMBERS ADJACENT TO SWITCH AND FUSE SYMBOLS RESPECTIVELY DENOTE SWITCH AMP RATING AND FUSE AMP RATING.
- 400AF / 100AT AIR CIRCUIT BREAKER, MANUALLY OPERATED WITH OVERCURRENT THERMAL INVERSE TIME AND MAGNETIC INSTANTANEOUS TRIP. 400AF DENOTES CIRCUIT BREAKER FRAME SIZE. 100AT DENOTES AMP TRIP SETTING.
- MAGNETIC TIME DELAY AND INSTANTANEOUS TRIP DEVICE.
- MAGNETIC CONTACTOR ELECTRICALLY OPERATED WITH OVERLOAD RELAYS. NUMBER INDICATES NEMA SIZE.
- (5) ELECTRIC MOTOR. NUMBER INDICATES HORSEPOWER (HP)
- REVERSING MAGNETIC CONTACTOR ELECTRICALLY OPERATED WITH OVERLOAD RELAYS NUMBER INDICATES NEMA SIZE. "RV" INDICATES REDUCED VOLTAGE.
- * MOTOR STARTING EQUIPMENT FURNISHED BY MANUFACTURER OF UNIT
- G.F.E. GOVERNMENT FURNISHED EQUIPMENT, CONTRACTOR INSTALLED.

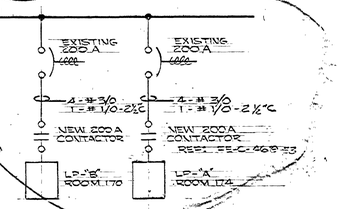

CONCURRENCE								
DATE	CS21	DATE	AS41	DATE	AS0IM	DATE	AS51	DATE	AS14
1/30/70	[signature]			1/19/70	[signature]	1/19/70	[signature]	5/18/71	[signature]

AS BUILT

REV.	BY	DATE		C.I. NO.	APPROVED
5	D.S.	1-16-73	INSTALLED PWR. LOCKOUT SYS. T.O. # 360, W.R. # 00394619 0059		
4	JJD	3-20-68	CHANGED LUBE OIL PUMP FEED FROM 120 V. TO 440 V.	5560-102	
3	TM	1-17-68	DELETED PANEL P1-B & FEEDER	5560-13	
2	TM	11-19-63	ADDED PANEL P1-B & FEEDER	5560-13	
1	TM	6-26-63	CHANGED BKR TRIP SIZE & WIRE SIZE	5560-5	

NATIONAL AERONAUTICS AND SPACE ADMINISTRATION — M S F C, HUNTSVILLE, ALABAMA

VITRO ENGINEERING COMPANY A DIVISION OF VITRO CORPORATION OF AMERICA NEW YORK

ADDITION TO BUILDING 4619 · LOAD TEST ANNEX

ELECTRICAL ONE LINE DIAGRAM

NASA AE CONT. NO. NASA 8-2145 — FILE NO. MSFC 7431

SUBMITTED: [signature] CHIEF, DES. ENGR.	APPROVAL RECOMMENDED: [signature]	APPROVED: [signature] CHIEF, ENGINEERING BRANCH	
A/E DATE: SEP. 14, 1962	LAB. DATE: 10-22-62	NASA DATE: 10-25-62	
DESIGNED: [signature] DRAWN: B. SHIDBERT CHECKED: [signature]	APPROVAL RECOMMENDED: [signature] CHIEF, DESIGN SECTION	DRWG. NO. FE-C-4619-E1	
SCALE: NONE	DESIGN DATE: 10-23-62 SPEC. NO. FE-2-303		

Approved For Safety [signature] OCT 20 1962 DATE

MSFC MASTER BID DISK 11-18-2013

MSFC-FORM 232 (REV. DEC., 1960)

OUTLINE PRESS, INC., BROOKLYN 11, N.Y. STOCK NO. 650

REV 6 CONCURRENCE									
DATE	CS2:	DATE	AB41	DATE	AS01M:	DATE	AB51	DATE	R&R-142
5/30/78	[signature]	6/6/78	[signature]	5-9-78	[signature]	5/19/78	[signature]	5-17-78	[signature]

GROUND WELL, FOR DETAIL OF WELL SEE STRUCTURAL DWG. FS-C-4619-S-10

INCOMING 4160 V POWER. FOR CONT. SEE DWG. FE-C-4619-E17

24"x24"x8" DEEP PULL BOX WITH SCREW COVER & GASKET PROVIDE WEEP-HOLES AT BOT. OF BOX.

K-1.6-1 B'SMNT. RETURN FAN

K-1.7-1 B'MNT. SUPPLY FAN

K-2.9-1 REFRIGERATION UNIT

FS-4-1 FS-4-2 REFRIG. CONTROL PNL.

K-4.8-1 CW. H. PUMP

K-4.8-2 CW. PUMP

K-4.8-3 STAND-BY PUMP

SUMP PUMP

FLOAT SWITCHES

TC-A

3#2-1/2"C-UP TO PNL. C.C. #3

4#6-1 1/2"C. TO LTG. PNL. LP-1

1"C FOR TELEPHONE IN FAN LOFT

2" SPARE CONDUIT

UP, 2#12, 3/4"C

2#16-3/4"C.

3#2-1/2"C.

1 1/2"C

2"C

1 1/2"C. TEL.

1"C

3#2/0-4"C

4" SPARE CONDUIT

SEE NOTE #2

2"C INTERCOM.

CHASE

BASEMENT EL. 566'-6"

RUN CONDUITS ABOVE H&V DUCTS

1-45 KVA ISOLATION TRANSF. 208V/120/208V MOUNT TRANSF. BETWEEN STEEL CROSS BEAMS

120/208V SUBSTATION

UP TO PNL. P1A

2#1, 2"C

6#12-1"C.

4#12-3/4"C.

8#12-1"C.

3#10-1"C.

26'-3"

FOR CONDUIT TERMINATION IN BASEMENT FLOOR SEE DWG.# FS-C-4619-S-2

750 KVA UNIT SUBSTATION

300 KVA DISTRIBUTION CENTER

INCOMING & METERING CUBICLE

7'-9"

3#4/0 IN EXIST'G 3 1/2"C.

2#3/0 IN EXIST'G 2"C.

INCOMING CUBICLE

TRANSITION

750 KVA TRANSFORMER 4160/480 V

300 KVA TRANSFORMER 4160/208/120V

MCC #1

MCC #2

UP, 1"C, TEL

UP 1 1/4"C INTER-COM.

2#4/0 IN EXIST'G 3 1/2"C.

4#2-2"C TO LTG. PNL. "L1"

4#6, 1 1/2"C. TO 60V UNREG. DIST. PNL.

2#2-2"C TO PNL. "L1"

24"x24"x6" INTERCOM. SPLICE BOX

24"x24"x6" TELEPHONE SPLICE BOX

12'-0"

5'-8"x6" WALL OPENING TOP EL. 580'-6"

1"C. TEL.

2"C. TEL

2'-0"

EL. 579'-9" TOP, EL. 578'-9" BOT.

EL. 579'-3"

UP TO PNL. "L8" 3#2-1/2"C

UP TO PNL. "L1" 3#4/0-3"C

UP TO PNL. "L8" 3#2-1/2"C

1 1/4"C INTERCOM. CONDUIT

2 1/2"C INTERCOM. CONDUIT

EL. 579'-9"

3#10-1"C. TO WEST DOOR DISCONNECT SWITCH

SEE NOTE #6

3-500 MCM-3"C TO WEST WALL BUS DUCT

EL. 578'-9"

3-#4/0 & 1#2-3"C. TO WEST WALL BUS DUCT

3-500 MCM & 1#4/0 3 1/2"C. TO EAST WALL BUS DUCT

EL. 578'-9"

3-500 MCM-3"C. TO EAST WALL BUS DUCT.

4#6, 2"C TO PNL. "L3"

EL. 578'-9"

3#10-1"C TO WEST DOOR DISC. SW.

3#10-1"C TO EAST DOOR DISC. SW.

3#10-1"C TO ELEVATOR DISC. SW.

3#10-1"C TO SOUTH DOOR DISC. SW.

3#6-1"C TO SOUTH SIDE H&V UNITS

3#6-1"C UP TO NORTH SIDE H&V UNITS

4#6-1 1/2"C TO 400 N DISTRIBUTION PANEL

INST. TUNNEL EL. 570'-3"

3#2-1/2"C. UP TO 480V. POWER RECEPTACLES

3" 500 MCM-3"C UP TO CARRIAGE ROLL RAMP MECHANISM

4/0 BARE GROUND, FOR CONT. SEE DWG. FE-C-4619-E-10

UP TO SPEAKERS ON TOWER

RUN THRU EXISTING 6" CONDUIT SLEEVES A TRENCH TO TELEPHONE & INTERCOM TERMINAL BOXES IN EXISTING BLDG. 4619

3" CONDUIT SEE NOTE #4

3#6-1 1/2"C. TO H&V UNITS

3#10-1"C. TO SOUTH DOOR

PROVIDE CONDUIT REDUCERS, SIZES AS REQUIRED.

3" CONDUITS SEE NOTE #2

SPARES

UP TO EL. 581'-0" FOR CONT. SEE DWG. FE-C-4619-E5

3"C. TELEPHONE UP FOR CONT. SEE DWG. FE-C-4619-E-16

APPROXIMATELY 75' FROM BUILDING WALL TO EXIST. 400 A PNL."BB"

4#6-1 1/2"C. IN EXIST'G 6"C & TRENCH TO CIRCUIT BREAKER ADJACENT TO EXIST'G 400 A PNL."BB"

RUN THRU EXISTING 6" CONDUIT SLEEVE

1 1/2"C. INTERCOM

CONDUIT REDUCERS

3" CONDUIT SEE NOTE #4 SPARES

3#6, 1 1/2"C UP TO H&V VENTILATORS

3#10, 3"C. UP TO SOUTH DOOR DISC. SW. FOR CONT. SEE DWG. FE-C-4619-E16

EXIST'G 20' OF 4/0 BARE CABLE. SEE DWG. FE-C-4619-S-10

GROUND WELL FOR DETAIL OF WELL SEE DWG. FE-C-4619-S-10

PART PLAN

SCALE: 1/8"=1'-0"

60V UNREGULATED SUPPLY TO RECEPTACLES ON BENCH. SEE DWG. FE-C-4619-E-3

28V DC SUPPLY

60~ REGULATED SUPPLY TO RECEPTACLES ON BENCH. SEE DWG. FE-C-4619-E-3

ELECTRONIC WORK BENCHES

2#12 IN EACH 3/4" CONDUIT

TOP TRAYS EL. 580'-2"

BOT. TRAYS EL. 579'-7"

4#10-1"C.

12/c#22-1"C.

1"C, TEL

1 1/4"C, INTERCOM.

UP, 1"C

UP, 1 1/4"C

SEE DWG. FE-C-4619-E-16

2-#12 THW; 1-#12 THW (GND) IN 3/4" C. CONNECT IN SERIES WITH FLOAT SW. ROUTE OVERHEAD.

SEE DWG. NO. E-14

B

A&B

1"C, TEL

1 1/4"C INTERCOM.

RISER UP THRU EXIST'G OPENING TO FIRST FLOOR SEE SHT. E-3 FOR CONTINUATION

400 A DISTR. PNL.

LTG. PNL. "L1" CKT. # 14

TOP TRAYS EL. 577'-11"

BOT. TRAYS EL. 577'-2"

CONDENSATE PUMP K-13.11-1

MECHANICAL ALTERNATOR

4#8, 1"C

2#2 RHW-1 1/4"C

SEE NOTE 6

SEE DWG.# FE-C-4619-E-16

UP TO ELEV. CONTROLLER, 3#10, 1"C.

UP TO EAST DOOR CONTROLLER, 3#10, 1"C

UP TO 120/208 V BUS DUCT, 3-500 MCM & 1#4/0-3 1/2"C.

UP TO 480 V BUS DUCT, 3-500 MCM-3"C

1G

GROUND WELL FOR DETAIL OF WELL SEE STRUCTURAL DWG. FE-C-4619-S-10

25'-0"

4" 5/8" 1 1/4" 300#

4"x3"x 1/4" STL. ANGLE CLIPS. DRILL & SLOT FOR BOLTING AS SHOWN.

1/2"-13 HEX HEAD CAP SCREW.

750 V. PHENOLIC INSULATOR SIMILAR TO DELTA STAR. CAT. #55704.

FIBRE WASHER

1/2"x1" BARE COPPER GROUND BAR.

MOUNT 10'-0" FROM FLOOR

1/2" LOCK WASHER

3"

CINCH ANCHOR GROUND BAR SUPPORTS TO WALL ON 3 FT. CTRS.

DETAIL "A"

INSTRUMENT GROUND BAR FASTENING DETAIL
HALF SCALE

REFERENCE DRAWINGS:

FE-C-4619-E-1 - ONE LINE WIRING DIAGRAM
FE-C-4619-E-5 - CONDUIT & GROUNDING. TEST AREA EL. 581'-0" COMPUTER ROOM
FE-C-4619-E-5 - 600V LOW IMPEDANCE BUS DUCT.
FE-C-4619-E-10 - MISC. SECTIONS & DETAILS.
FE-C-4619-E-16 - LIGHTING PLAN - TEST AREA, EL. 581'-0"
FE-C-4619-E-17 - PLOT PLAN & DETAILS, 4160 V POWER SUPPLY
FE-C-4619-S-2 - FLOOR PLAN & SECTIONS.

NOTES:

1- ALL WIRING TO BE 3#12 IN 1" CONDUIT, UNLESS OTHERWISE NOTED.
2- FOR FRONT VIEWS ON MCC #1, MCC #2 & SECT. F-F, SEE DWG.# FE-C-4619-E-17
3- FOR SECTIONS D-D & E-E SEE DWG.# FE-C-4619-E-10
4- ALL BURIED CONDUITS INSTALLED BY OTHERS, SEE DWG.# FE-C-4619-S-2
5- FOR ADDITIONAL SYMBOLS & GENERAL NOTES SEE DWG.# FE-C-4619-E-16
6- CONNECT 4/0 GROUND CABLE TO EXISTING GROUT STACK OF 4/0 GROUND CABLE IN TUNNEL.
7- FOR EXISTING 4/0 GROUND CABLE ROUTING SEE DWG. FE-C-4619-S-2

SECTION B-B
SCALE: 1/2"=1'-0"

EXISTING OPENING
EL. 580'-2"
EL. 579'-7"
EL. 579'-6"
EL. 579'-0"
17"±
EL. 580'-8"
EL. 581'-0"
EL. 578'-11"
2#4 LADDER TYPE CABLE TRAY
TOP OF H&V DUCT EL. 576'-10"

TYPICAL TRAY SUPPORT DETAIL
NO SCALE

UNISTRUT EMBEDDED IN CEILING SLAB (BY OTHERS)
CLIP ANGLE
TRAY
BRACKET
CHANNEL UPRIGHT
DIAGONAL BRACE
EL. 580'-8"

SECTION A-A
SCALE: 1/2"=1'-0"

FOR CONT. OF TRAY RUNS SEE DWG. FE-C-4619-E-8
EL. 581'-0"
EL. 580'-0"
4" STEAM LINE
EL. 579'-3"
2 1/2" CONDENSATE RETURN
EL. 578'-3"
3/4" CONDENSATE RETURN
EL. 577'-6"
EL. 577'-0"
A, D, F
B, C, E
EL. 576'-3"
24" LADDER TYPE CABLE TRAY
INST. TUNNEL
EXISTING WALL OPENING - 18" HIGH BOT. EL. 576'-0"
BASEMENT
STOP TRAYS D, C, E & F HERE AT ENTRY TO BASEMENT. TRAYS A & B CONTINUE TO FALSE FLOOR IN COMPUTER ROOM.

SECTION C-C
SCALE: 1/4"=1'-0"

1"C - TERMINATE WITH BUSHING AND ROUTE 2#2 WIRES TO REG. DIST. PANEL THRU TERM. BOX THRU CABLE TRAYS
24" CONNECTING TRAY
4#6-1 1/2"C TO EXISTING PANEL "BB" IN EXISTING BLDG.
4#10-1"C.
9" TRAY
9" TRAY
400 A DISTRIBUTION PANEL
9" COMMUNICATION SYSTEMS RACK
60~ REGULATED DISTR. PNL. TERMINAL BOX
6'-0"

APPROVED FOR SAFETY
[signature] OCT 20 1982
CHIEF, DESIGN SECTION DATE

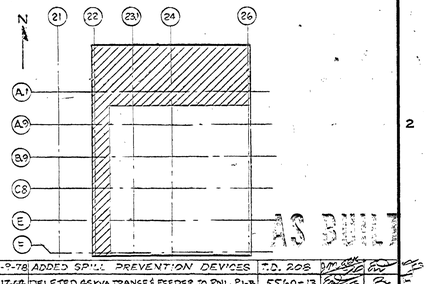

AS BUILT

REV.	BY	DATE		C.I. NO.	APPROVED
6	WEB	5-9-78	ADDED SPARK PREVENTION DEVICES	T.D. 208	
5	TM	1-17-68	DELETED 45 KVA TRANSF. & FEEDER TO PNL. P1-B	5560-13	
4	TM	11-19-68	ADDED 45 KVA TRANSF. & FEEDER TO PNL. P1-B	5560-13	
3	WRB	6-24-68	CHANGED WIRE SIZE	5560-5	
2	Rev.	5-2-68	RELOCATED TELEPHONE & INTERCOM JUNCT. BOXES	5560-3	
1	TM	2-1-68	DELETED PART OF CABLE TRAYS C, D, E & F.	5560-1	

NATIONAL AERONAUTICS AND SPACE ADMINISTRATION — M S F C — HUNTSVILLE, ALABAMA

VITRO ENGINEERING COMPANY A DIVISION OF VITRO CORPORATION OF AMERICA NEW YORK

ADDITION TO BLDG. 4619 - LOAD TEST ANNEX
ELECTRICAL
CONDUIT & GROUNDING - BASEMENT PLAN
SECTS. & DETAILS

NASA AE CONT. NO. NASA 8-2145

FILE NO. MSFC 7432

SUBMITTED: [signature] CHIEF, DES. ENGR. BRANCH	APPROVAL RECOMMENDED: [signature]	APPROVED: [signature] CHIEF, ENGINEERING BRANCH	
A/E: DATE: SEPT. 14, 1962	DATE: 10-22-62	NASA: DATE: 10/25/62	
DESIGNED: NS DRAWN: NS CHECKED: RC	APPROVAL RECOMMENDED: [signature] CHIEF, DESIGN SECTION	DRWG. NO. FE-C-4619-E-2	
SCALE: 1/4"=1'-0"	DESIGN DATE: 10-24-62	SPEC. NO. FE-D-303	

MSFC MASTER FILM DISK 11-18-2013

MSFC-FORM 232 (REV. DEC., 1960)

FORM No. 1000.807-0

NOTES.

1. 8-#12 C INSTR. GRD. SHALL BE RUN IN RIGID STEEL CONDUIT, STUB-OUT, COIL UP 5'-0" OF CABLE AND LEAVE.
2. ALL CONDUIT IN FALSE FLOOR AREA MAY BE FLEX, ALL OTHER AREA WILL BE RIGID STEEL.
3. CONDUCTORS SHALL BE RUN AND STUB-OUT FOR EACH COMPUTER, COIL 3'-0" OF CABLE & LEAVE FOR CONNECTION BY OTHERS.

COMPUTER EQUIPMENT SCHEDULE

ITEM	CIRC. NO.	EQUIPT. SERVED	PHASE	VOLT
1	P1-A-6	Mass. Stg. Contl.	1	110
2	P1-A-18	Mass. Stg. Elect.	3	208
3	P1-A-16	Mass Stg. File	3	208
4	P1-A-20	Centeral Processor	3	208
5	P1-A-14	Printer Contl.	3	208
6	P1-A-15	Aux. Arith. Unit	"	208
7	P1-A-19	Tape Contl.	3	208
8	P1-A-1	Card Punch	1	110
9	P1-A-7	Sw. Unit	1	110
10	P1-A-17	D.I.O. Buffer	1	208
11	P1-A-13	D.I.O.C	3	208
12	P1-B-2	Flora Tape Rack	1	110
13	P1-B-1	Flora Tape Rack	1	110
14	P1-B-13	Aux. Arith. Unit	"	208
15	P1-B-7	Flora Tape Rack	1	110
16	P1-B-21	Tape Unit	3	208
17	P1-B-8	Card Punch	1	110
18	P1-B-18	D.I.O.C	3	208
19	P1-B-14	D.I.O. Buffer	1	208
20	P1-B-19	Printer Contl.	3	208
21	P1-B-20	Centeral Processor	3	208
22	P1-B-15	Mass. Stg. Contl.	1	110
23	P1-B-17	Mass. Stg. Elect.	3	208
24	P1-B-16	Mass. Stg. File	3	208

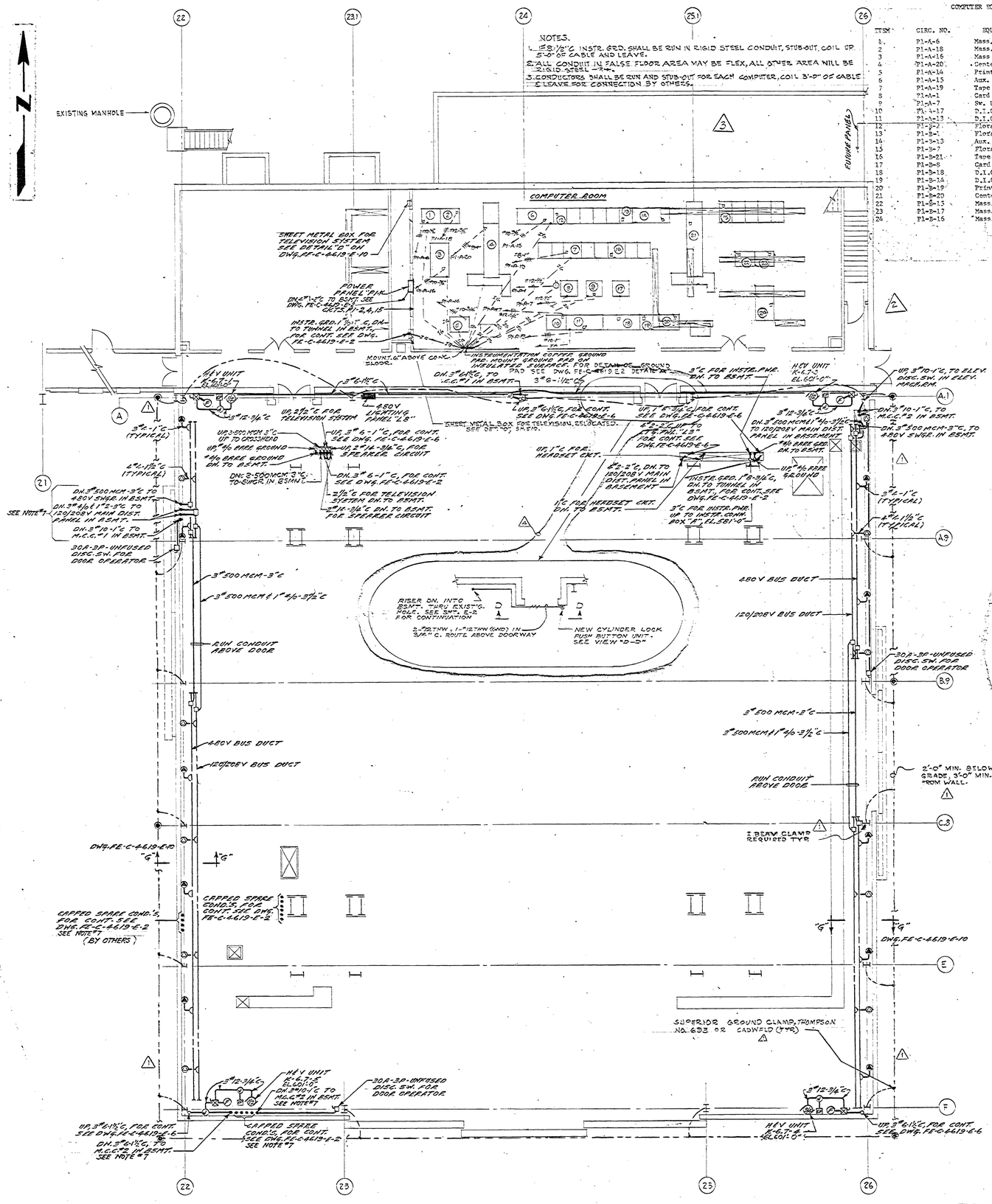

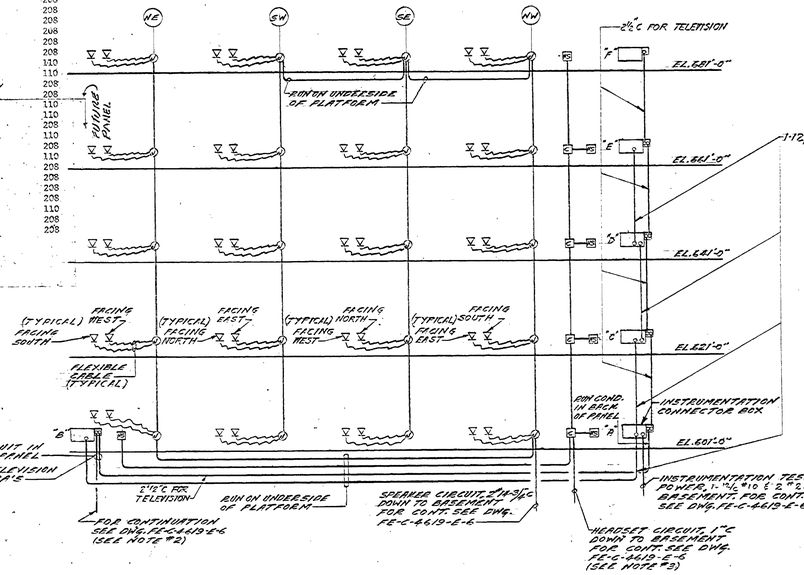

COMMUNICATION RISER

SPEAKER CIRCUITS - 2-#14-3½"C
HEADSET CIRCUIT - 1-#12-2"C

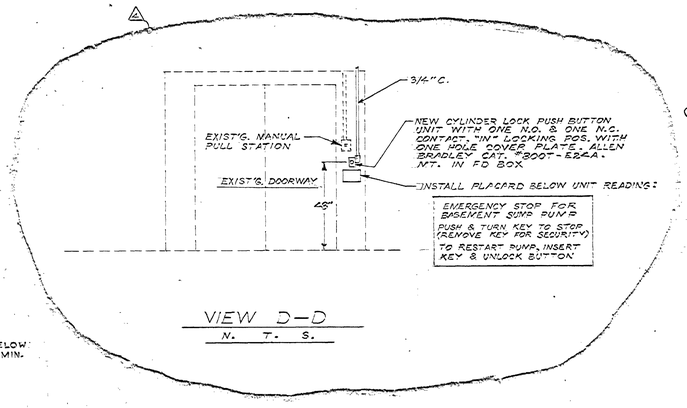

VIEW D-D
N. T. S.

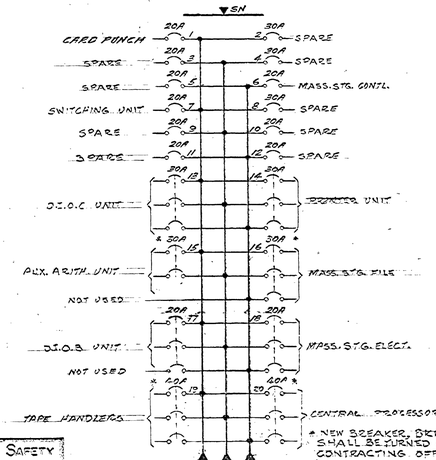

POWER PANEL "P1-A"
5B, 4W, 120/208 V, 200A MAINS

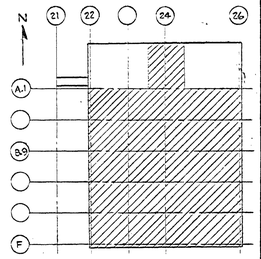

REFERENCE DRAWINGS:

FE-C-4619-E2 - ELECTRICAL-CONDUIT & GRD. BSMT. PLAN, SECTION & DETAILS.
FE-C-4619-E6 - ELECTRICAL-LIGHTING & PWR. PLAN-TEST AREA EL. 601'-0" & 621'-0" & 661'-0"
FE-C-4619-E10 - ELECTRICAL-MISC. SECTIONS & DETAILS.
FE-C-4619-E16 - ELECTRICAL-LIGHTING PLAN-TEST RISER EL. 581'-0"

LEGEND △ #6 BARE COPPER
⊙ ¾" X 10' COPPERCLAD GROUND ROD (6-REQ'D TOTAL)

NOTES:

1. FOR SYMBOLS & GENERAL NOTES SEE DWG. FE-C-4619-E-16.
2. CABLE FOR TELEVISION CAMERA'S WILL BE FURNISHED BY TELEVISION MANUFACTURER.
3. CABLE FOR HEADSET CIRCUIT WILL BE FURNISHED BY INTERCOMMUNICATION MANUFACTURER.
4. IN COMPUTER ROOM ALL FLEXIBLE CONDUIT SHALL BE RUN BELOW ELEVATED FLOOR.
5. FOR EMBEDDED CONDUITS IN FIRST FLOOR AREA SEE DWG. TS-C-4619-S-2.
6. ON ELEV. 581'-0" AT COLUMNS A.1-22, A.1-23, C.8-22, F-22, F-23, F-25, F-26, C.8-26, A.1-26 CLARK ALL EXISTING #6 BARE GROUND CABLE STUB-UPS SHALL BE CONNECTED AND CADWELDED TO STEEL COLUMNS.
7. IN TEST AREA ALL CONDUIT FLOOR PENETRATIONS SHALL BE MADE THROUGH EXISTING 3" CONDUIT SLEEVES. CONDUIT REDUCERS SHALL BE INSTALLED AT EACH END OF CONDUIT SLEEVE AS REQUIRED.

REV.	BY	DATE		C.I. NO.	APPROVED
△	J.E.B.	5-10-78	ADDED SPILL PREVENTION DEVICES T.D. 208		
△	TM	1-17-66	DELETED PANEL P1-B & FEEDER	5560-13	
△	TM	11-21-63	ADDED PNL. P1-B & FEED - REVISED COMP. RM.	5560-13	
△	JJD	6-11-63	ADDED LIGHTNING PROTECTION SYST.	5560-5	

NATIONAL AERONAUTICS AND SPACE ADMINISTRATION — M S F C — HUNTSVILLE, ALABAMA

VITRO ENGINEERING COMPANY A DIVISION OF VITRO CORPORATION OF AMERICA NEW YORK

ADDITION TO BUILDING 4619 - LOAD TEST ANNEX
ELECTRICAL
CONDUIT & GRD. PLAN-TEST AREA EL. 581'-0" & COMPUTER ROOM

NASA AE CONT. NO. NASA 8-2145 — FILE NO. MSFC 7433

SUBMITTED:	APPROVAL RECOMMENDED:	APPROVED:	
CHIEF, DES. ENGR.		CHIEF, ENGINEERING BRANCH	
AE. DATE: SEP 14, 1962	LAB. DATE: 10-24-62	NASA DATE: 11-2562	
DESIGNED R.S.	APPROVAL RECOMMENDED:	DRWG. NO.	
DRAWN S.S.	CHIEF, DESIGN SECTION		
CHECKED R.D.	DESIGN DATE: 10-24-62		
SCALE: 1/8"=1'-0"	SPEC. NO. FE-D-303	FE-C-4619-E-3	

REV △ CONCURRENCE

DATE	CS21	DATE	AB41	DATE	AS01N	DATE	AB51	DATE	AB-1H
6-28-78	Boston	6-28-78		6-29-78		6-29-78		6-29-78	

APPROVED FOR SAFETY
SEP 20 1962
DATE

AS BUILT

MSFC MASTER BID DISK 11-18-2013

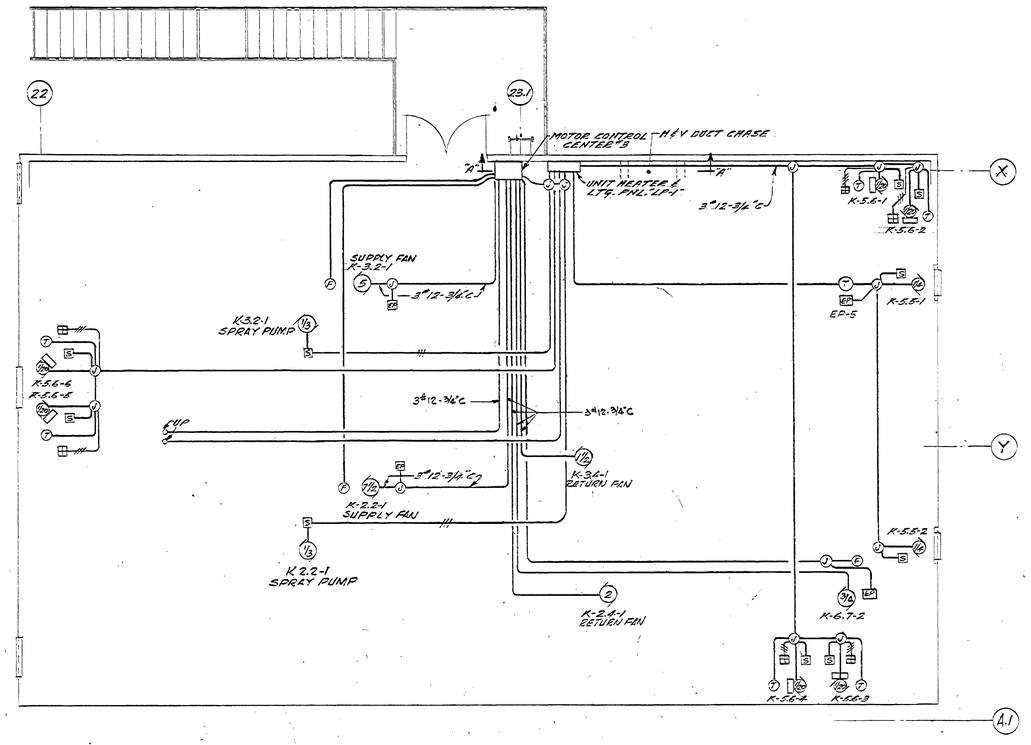

FAN ROOM PLAN
SCALE: 1/4"=1'-0"

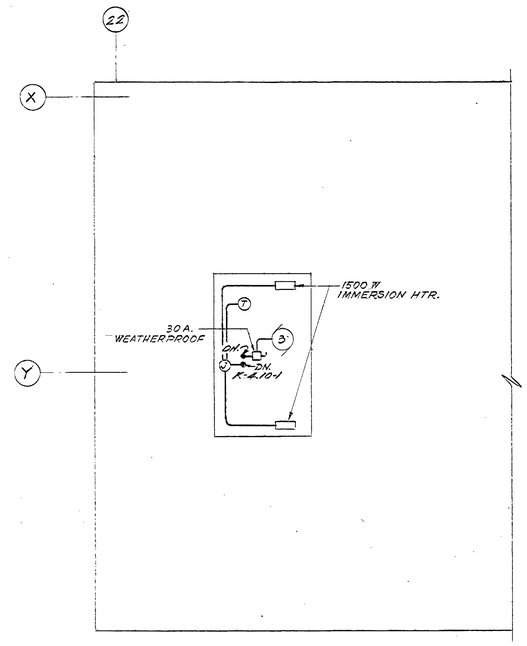

FAN ROOM ROOF PLAN
SCALE: 1/4"=1'-0"

NOTES:

1. UNLESS OTHERWISE NOTED ALL WIRING SHALL BE SURFACE MOUNTED 2"12-3/4"C.
2. FOR SYMBOLS AND GENERAL NOTES SEE DWG. FE-C-4619-E-1C

REFERENCE DRAWINGS

FE-C-4619-E2 - CONDUIT AND GROUNDING BASEMENT PLAN AND SECTIONS.

FE-C-4619-E15 - LIGHTING PLAN - FAN LOFT

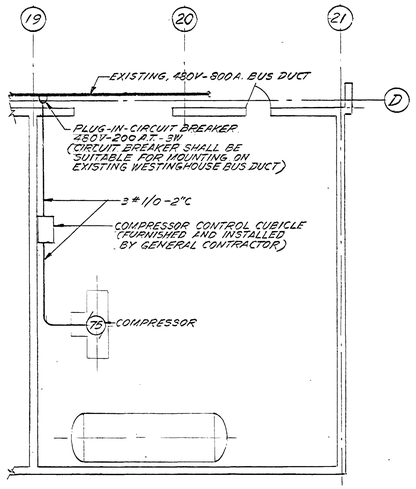

AIR COMPRESSOR ROOM, PLAN
BUILDING 4619
SCALE: 1/8"=1'-0"

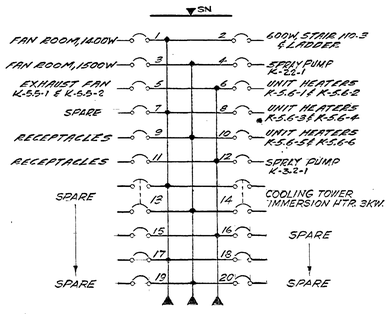

UNIT HEATER & LIGHTING PANEL "LP-1"
3 Ø, 4 W, 120/208 V.
SINGLE POLE-20A. CIRCUIT BREAKERS
TWO POLE-20A. CIRCUIT BREAKERS

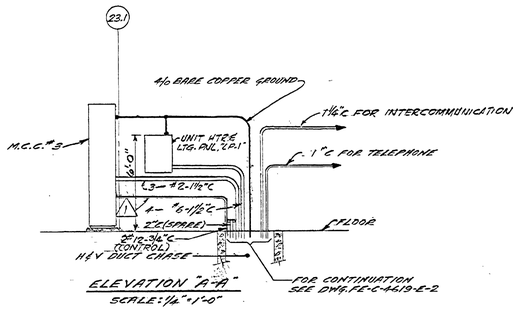

ELEVATION "A-A"
SCALE: 1/4"=1'-0"

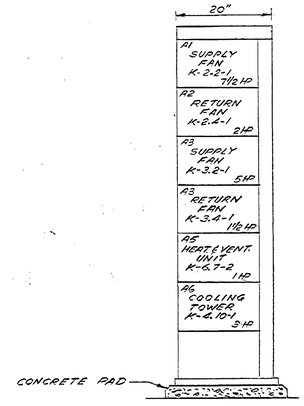

MOTOR CONTROL CENTER #3
SCALE: 3/4"=1'-0"

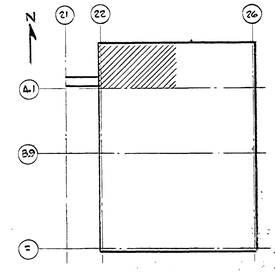

AS BUILT

REV.	BY	DATE		C.I. NO.	APPROVED
1	TM	6-24-63	CHANGED WIRE SIZE	5560-5	6/63

NATIONAL AERONAUTICS AND SPACE ADMINISTRATION — M S F C, HUNTSVILLE, ALABAMA

VITRO ENGINEERING COMPANY A DIVISION OF VITRO CORPORATION OF AMERICA — NEW YORK

ADDITION TO BUILDING 4619-LOAD TEST ANNEX
ELECTRICAL CONDUIT & GROUNDING PLAN-FAN ROOM, ROOF & AIR COMPRESSOR ROOM IN BLDG. 4619

NASA AE CONT. NO. NASA 8-2145 — FILE NO. M S F C 7434

SUBMITTED: H.V. Hogan — CHIEF, DES. ENGR. — AE: DATE: SEP. 14, 1962	APPROVAL RECOMMENDED: — LAW: DATE: — APPROVAL RECOMMENDED: — CHIEF, DESIGN SECTION: — DESIGN. DATE: 10-24-62 — SPEC. NO. FE-10-303	APPROVED: — CHIEF, ENGINEERING BRANCH — NASA: DATE: 1-10-2563
DESIGNED: C.B. — DRAWN: G.S. — CHECKED: — SCALE: AS NOTED		DRWG. NO. FE-C-4619-E-4

APPROVED FOR SAFETY — OCT 8 0 1962 — DATE — SAFETY OFFICE

MSFC MASTER BID DISK 11-18-2013

GOLDEN PRESS, INC., BROOKLYN 31, N.Y. STOCK NO. 649

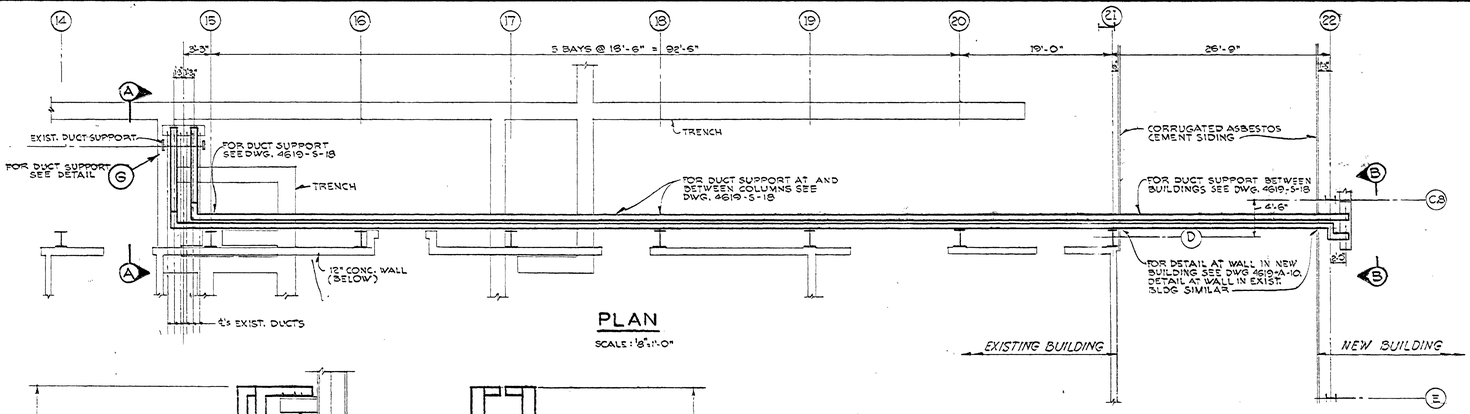

PLAN

SCALE: 1/8"=1'-0"

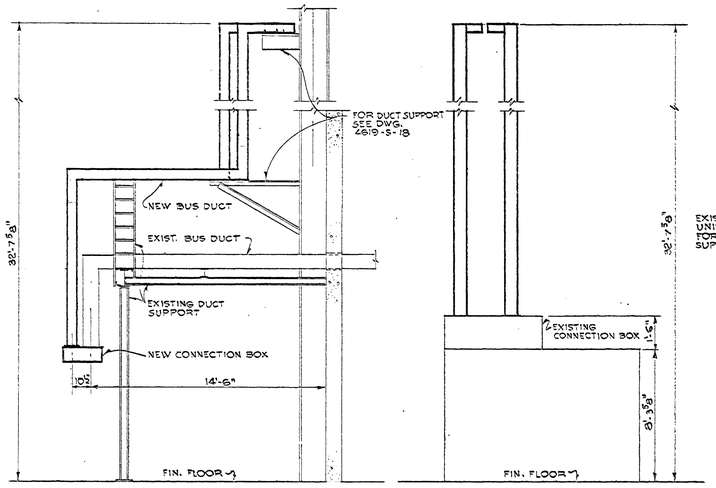

ELEVATION A-A

SCALE: 1/4"=1'-0"

ELEVATION B-B

SCALE: 1/4"=1'-0"

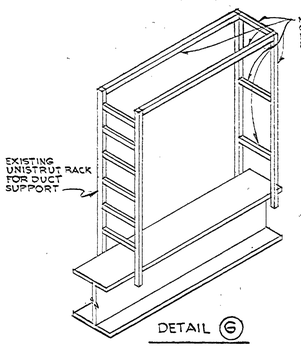

DETAIL G

ISOMETRIC VIEW

NOT TO SCALE

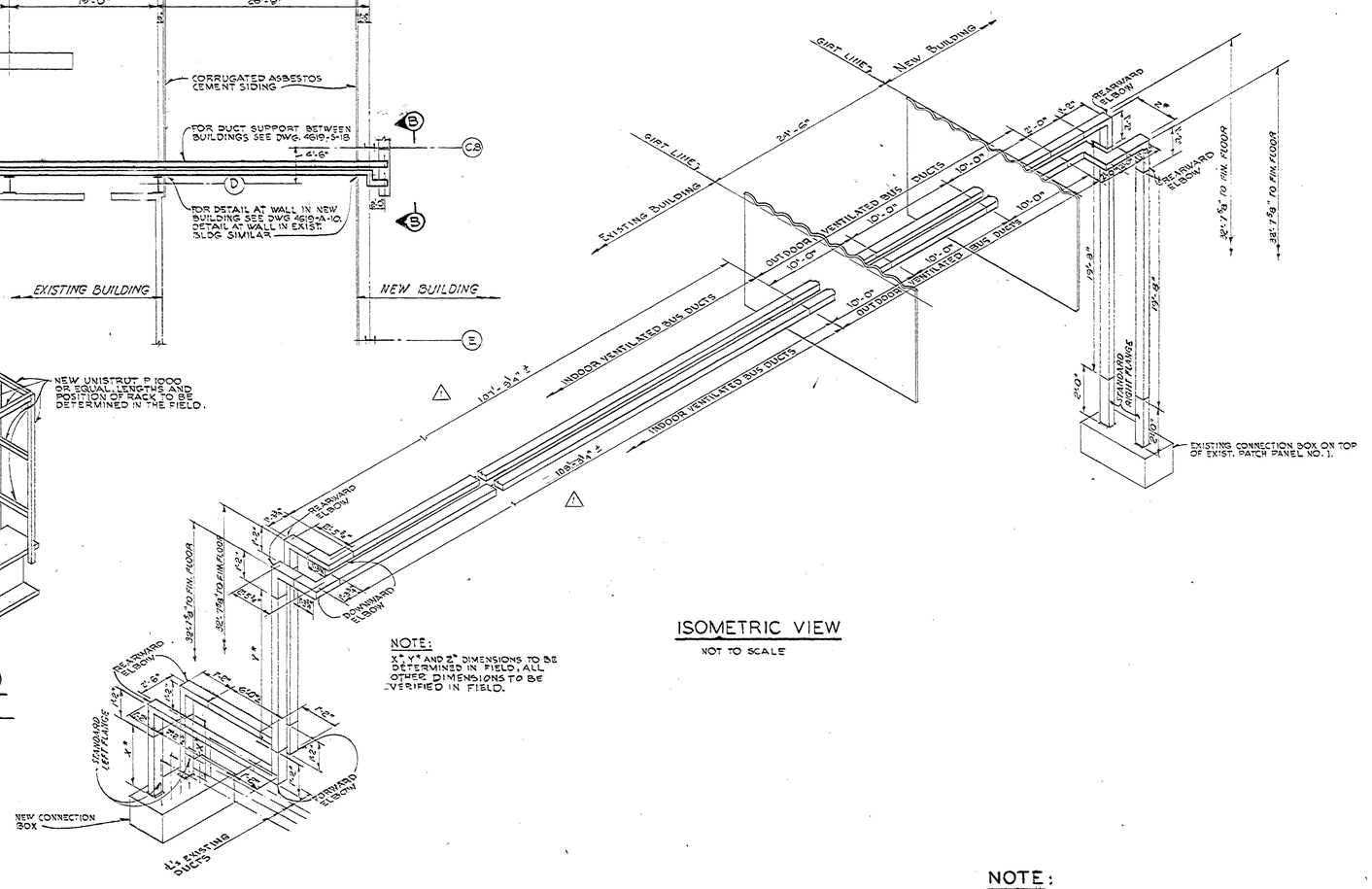

ISOMETRIC VIEW

NOT TO SCALE

NOTE:
1'-0", 1'-6" AND 2" DIMENSIONS TO BE DETERMINED IN FIELD; ALL OTHER DIMENSIONS TO BE VERIFIED IN FIELD.

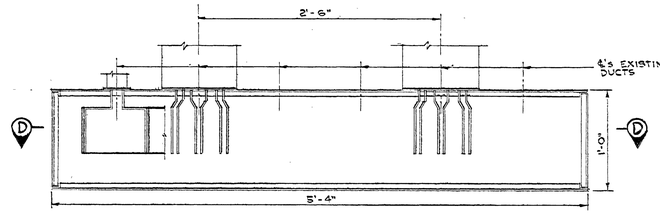

SECTION C-C

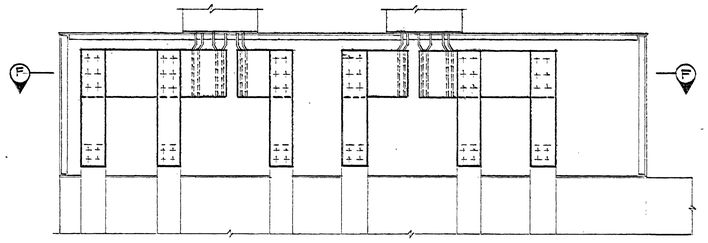

SECTION E-E

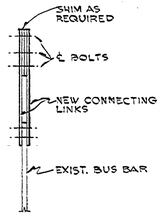

SECTION H-H (TYPICAL)

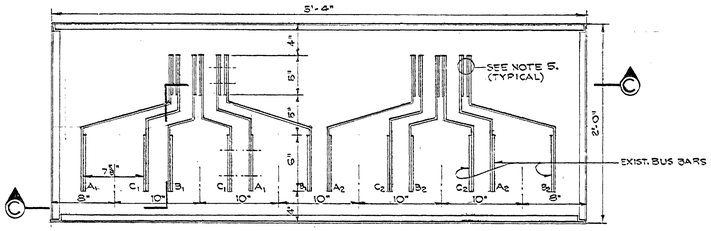

SECTIONAL PLAN D-D

NEW CONNECTION BOX

SCALE: 1½"=1'-0"

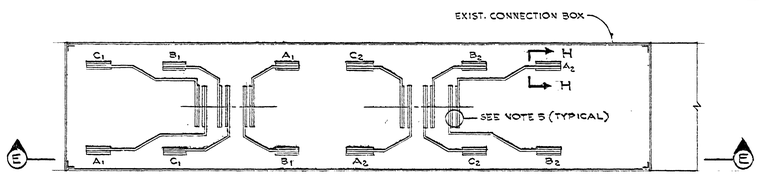

SECTIONAL PLAN F-F

EXISTING CONNECTION BOX SEE NOTE 1.

SCALE: 1½"=1'-0"

NOTE:

1. SUGGESTED CONNECTION BETWEEN NEW 1600 AMP LOW IMPEDANCE BUS DUCTSAND EXISTING PATCH PANEL NO.1.
2. ALL CONNECTION BUS BARS ARE TO BE COPPER BAR, 800 AMP CAPACITY SILVER PLATED AT ALL CONNECTIONS.
3. ALL CONNECTION JOINTS ARE TO BE MADE UP USING ½"-20 HEX. HEAD SILICON BRONZE BOLTS AND NUTS COMPLETE W/ 2 LOCK WASHERS (SPRING TYPE). ALL ITEMS ARE TO BE SILVER PLATED.
4. FOR DESCRIPTION OF 1600 AMP LOW (LOW IMPEDANCE) BUS DUCT SEE SECTION 28 OF SPECIFICATIONS.
5. INSULATE CONNECTIONS WITH "SILICONE ELECTRICAL TAPE" FOR 600V.

AS BUILT

REV.	BY	DATE		C.L. NO.	APPROVED
1	JJD	4-9-64	CORRECTED DIM. ON ISOMETRIC VIEW	5660-26	B

NATIONAL AERONAUTICS AND SPACE ADMINISTRATION — M S F C — HUNTSVILLE, ALABAMA

VITRO ENGINEERING COMPANY A DIVISION OF VITRO CORPORATION OF AMERICA — NEW YORK

ADDITION TO BUILDING 4619-LOAD TEST ANNEX ELECTRICAL 600 V INFRARED BUS DUCT EXTENSION

NASA AE CONT. NO. NASA 8-2145 — FILE NO. MSFC 7435

SUBMITTED: CHIEF DES ENG.	DATE: 9-19-62	APPROVAL RECOMMENDED:	APPROVED: CHIEF, ENGINEERING BRANCH
AE.	DATE: SEP. 14, 1962	LAB.	DATE: 10-22-62
DESIGNED C.A.S. DRAWN W.B. CHECKED		APPROVAL RECOMMENDED: CHIEF, DESIGN SECTION	NASA DATE: 10-25-62
SCALE: AS NOTED		DESIGN DATE: 9-24-62	DRWG. NO. FE-C-4619-E-5
		SPEC. NO. FE-D-303	

APPROVED FOR SAFETY
OCT 20 1962
CHIEF, SAFETY OFFICE — DATE

MSFC MASTER BID DISK 11-18-2013

OZALID PRINTS, INC., BROOKLYN 17, N.Y. STOCK NO. 950

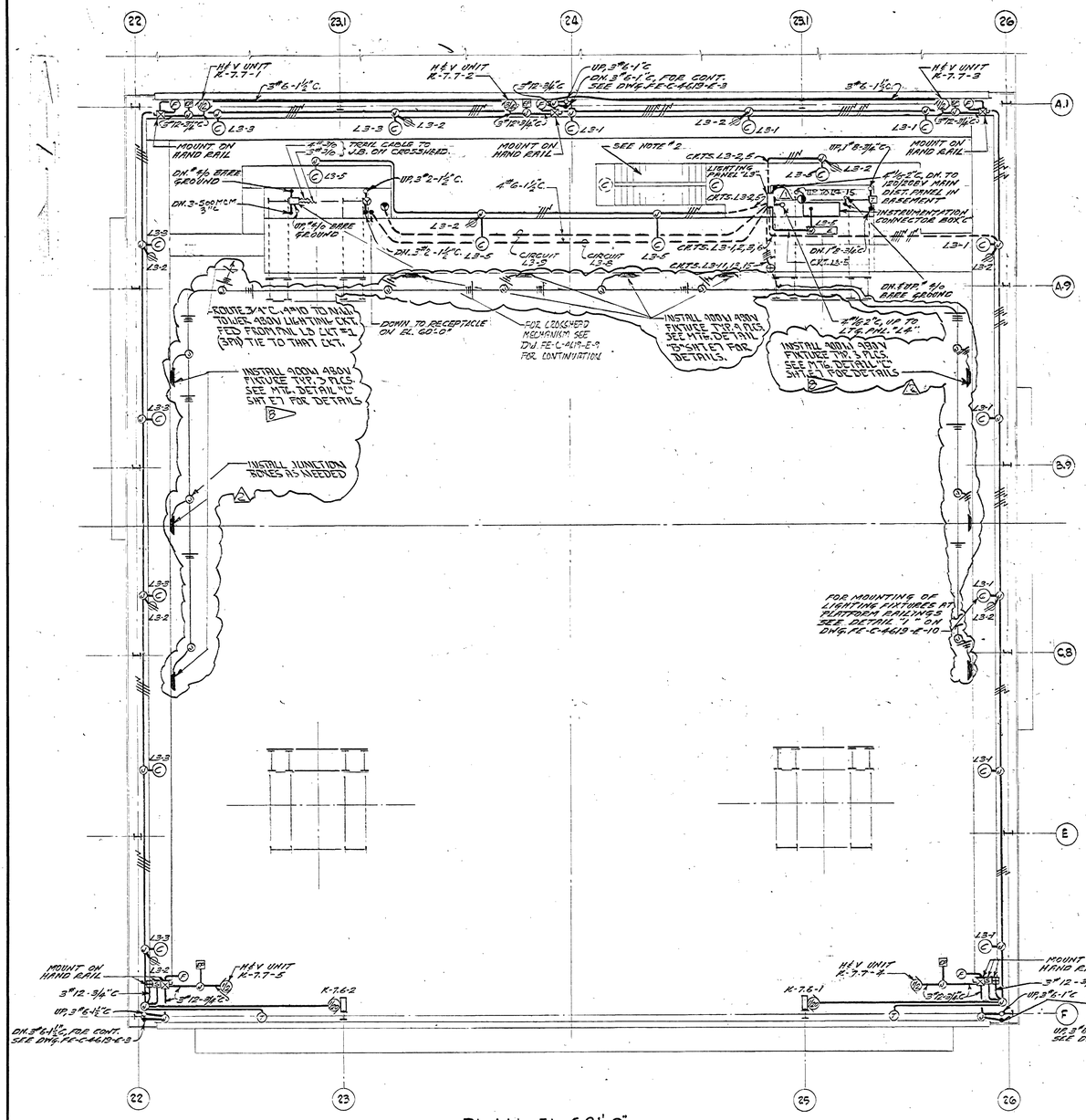

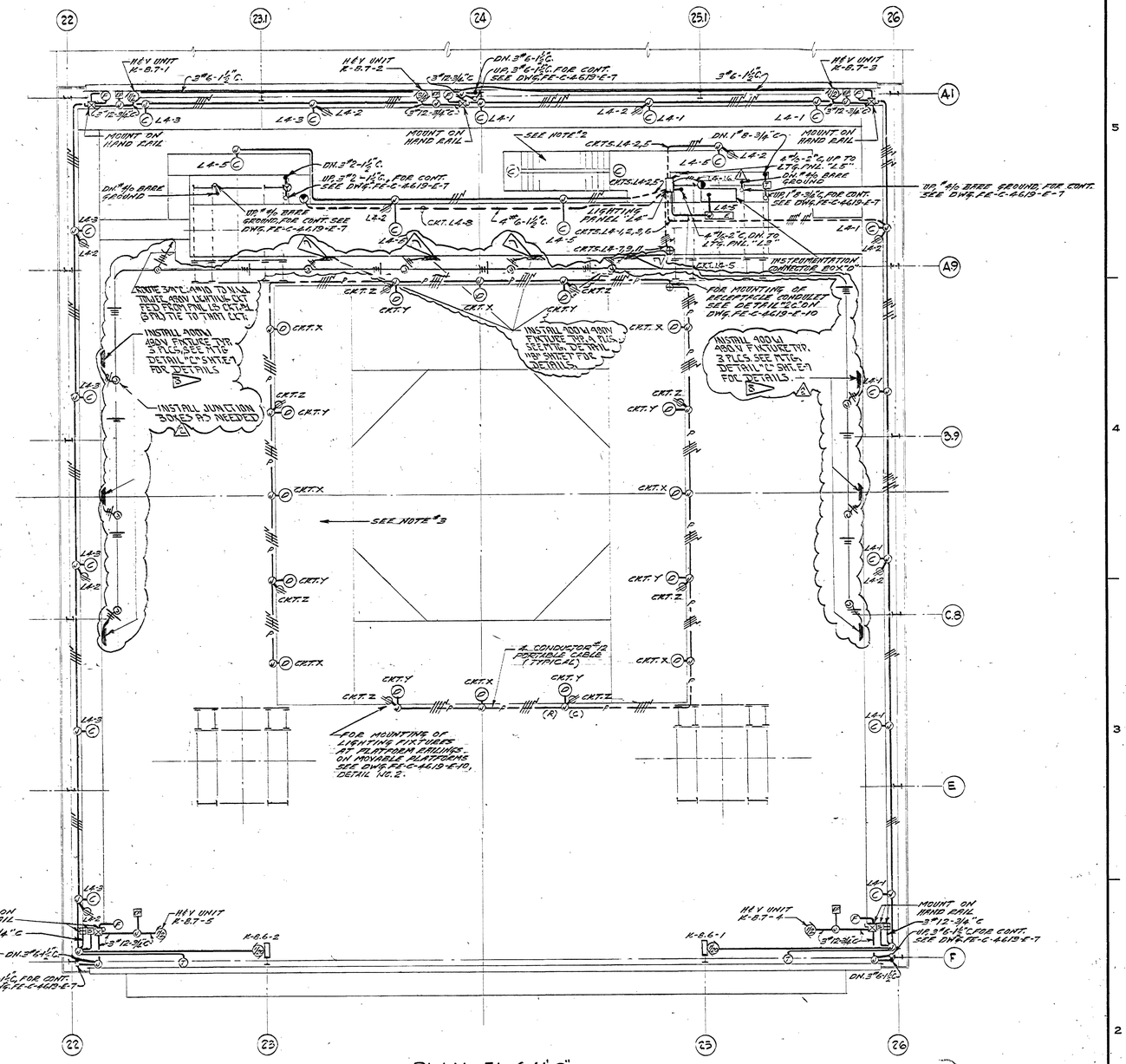

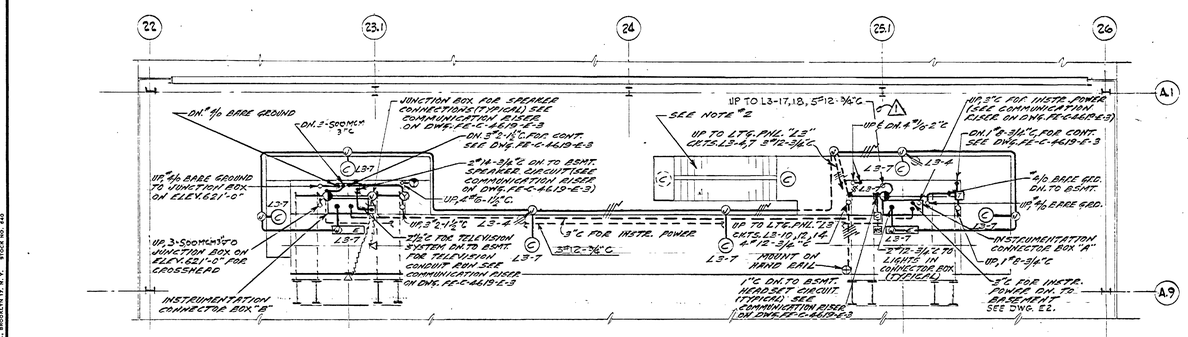

NOTES:

1. FOR SYMBOLS & GENERAL NOTES SEE DWG. FE-C-4619-E-16
2. FOR ARRANGEMENT OF LIGHTS ON STAIR "4" SEE DWG. FE-C-4619-E-10.
3. COMPLETE LIGHTING SHALL BE PROVIDED FOR TWO MOVABLE PLATFORMS.
4. CABLE FOR TELEVISION CAMERA'S WILL BE FURNISHED BY TELEVISION MANUFACTURER.
5. CABLE FOR HEADSET CIRCUIT WILL BE FURNISHED BY INTERCOMMUNICATION MANUFACTURER.
6. SEE NOTE "A" ON DWG. I2 FOR CONDUIT FOR I.V. SYSTEM.

REFERENCE DRAWINGS:

FE-C-4619-E-3 ELECTRICAL - CONDUIT & GRD. PLAN - TEST AREA EL. 581'-0" & COMPUTER ROOM.
FE-C-4619-E-7 ELECTRICAL - LIGHTING & PWR. PLAN - TEST AREA EL. 601'-0" & 621'-0".
FE-C-4619-E-9 ELECTRICAL - CONDUIT & GRD. - CROSSHEAD PLAN, SECTIONS & DETAILS.
FE-C-4619-E-10 ELECTRICAL - MISC. SECTIONS & DETAILS.
FE-C-4619-E-16 ELECTRICAL - LIGHTING PLAN - TEST AREA EL. 581'-0".

B 400W 480V METAL HALIDE FIXTURE TRUNNION MOUNT GE # C439TN111 OR EQUAL W/ MEMA 5S5 BEAM SPREAD.
A ALL CONDUIT TO BE 3/4" EMT. ALL WIRE TO BE #10 THWN

APPROVED FOR SAFETY
Liberty Mayo OCT 20 1982
SAFETY OFFICE DATE

⊖ RECEPTACLE, 20A. 250 VOLT, 3 WIRE, MOUNTED ON COL. IN TS OUTLET BOX. ⚠

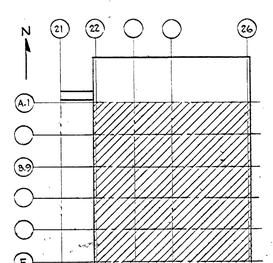

KEY PLAN
NO SCALE

AS BUILT

REV.	BY	DATE	
2	JBC	3-15-90	REPLACE HIGH BAY LIGHTING
1	DWG	5-2-63	ADDED RECEPTACLE FOR H.V. UNIT

C.I. NO. 5660-3

NATIONAL AERONAUTICS AND SPACE ADMINISTRATION — M S F C, HUNTSVILLE, ALABAMA

VITRO ENGINEERING COMPANY A DIVISION OF VITRO CORPORATION OF AMERICA — NEW YORK

ADDITION TO BUILDING 4619 - LOAD TEST ANNEX
ELECTRICAL
LIGHTING & PWR. PLAN - TEST AREA EL 601'-0", 621'-0" & 641'-0"

NASA AE CONT. NO. NASA 8-2145 — FILE NO. M S F C 7436

SUBMITTED: CHIEF DES. BR.	APPROVAL RECOMMENDED:	APPROVED:
AE: DATE: SEP. 14, 1962	L&N DATE: 10-22-62	NASA DATE: 10-25-62
DESIGNED G.S. DRAWN G.S. CHECKED RC	APPROVAL RECOMMENDED: CHIEF, DESIGN SECTION	DRWG. NO. FE-C-4619-E-6
SCALE: 1/8" = 1'-0"	DESIGN DATE: 10-24-62 SPEC. NO. FE-D-303	

MSFC MASTER BID DISK 11-18-2013

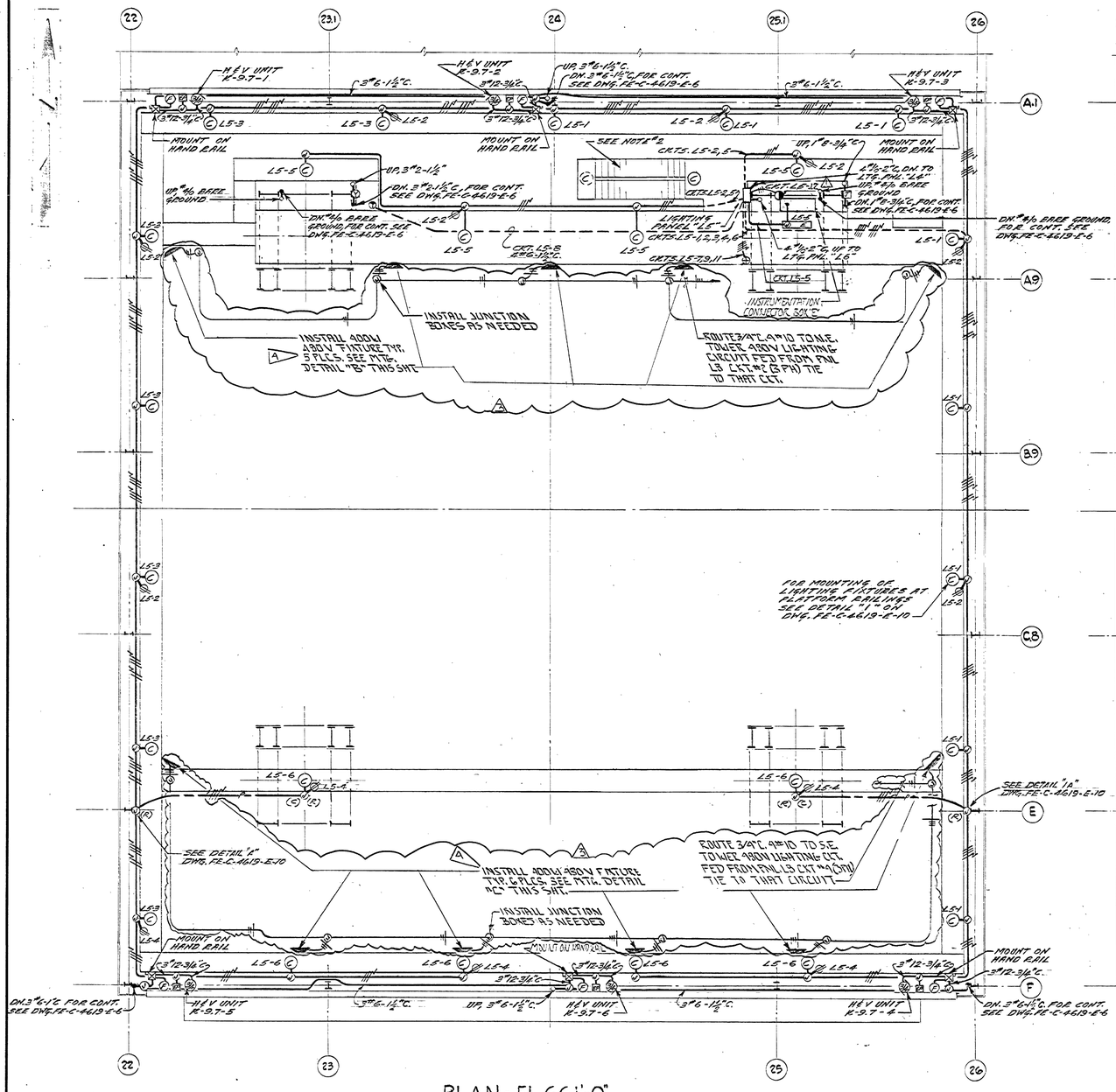

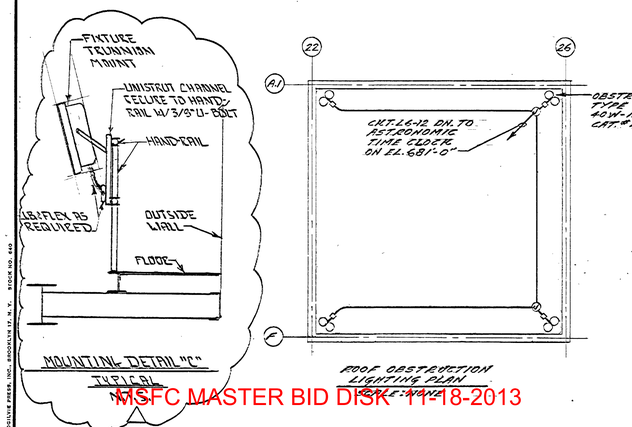

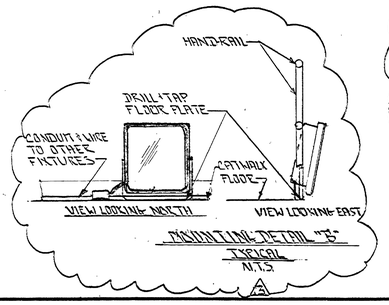

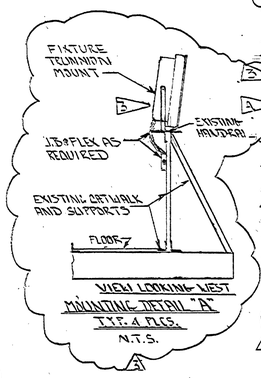

9. ALL CONDUIT TO BE 3/4" EMT ALL WIRE TO BE #10 THHN.

NOTES:

1. FOR SYMBOLS & GENERAL NOTES SEE DWG. FE-C-4619-E-16.
2. FOR ARRANGEMENT OF LIGHTS ON STAIR "A" SEE DWG. FE-C-4619-E-10.

3. 1000 W 480V METAL HALIDE FIXTURE, TRUNNION MOUNT GE# L33TM475 OR EQUAL W/ NEMA 6x5 BEAM SPREAD
4. 400W 480V METAL HALIDE FIXTURE, TRUNNION MOUNT GE# L25MH1/OR EQUAL W/ NEMA 5x5 BEAM SPREAD.

REFERENCE DRAWINGS:

FE-C-4619-E-6 - ELECTRICAL - LIGHTING & PWR. PLAN - TEST AREA EL. 601'-0", 621'-0" & 641'-0".
FE-C-4619-E-10 - ELECTRICAL - MISC. SECTIONS & DETAILS.
FE-C-4619-E-16 - ELECTRICAL - LIGHTING PLAN - TEST AREA EL. 581'-0".

A. DETAIL "A" FOR 6TH LEVEL CATWALK BETWEEN S.E. & S.W. TOWERS.
5. DETAIL "B" FOR LEVELS 6 THRU 2 CATWALKS BETWEEN N.E. & N.W. TOWERS.
6. DETAIL "C" FOR EAST & WEST LEVELS 3RD AND THE SOUTH 3RD LEVEL CATWALK ABOVE DOOR. NOTE THAT LEVELS 3 & 2 DO NOT HAVE STRUCTURAL STEEL PROJECTING FURTHER THAN 12" FROM HAND-RAIL.
7. RED LINE DRAWING TO INDICATE THE PHASE TO WHICH FIXTURE IS CONNECTED.

Approved For Safety
Safety Office
OCT 20 1982
DATE

RECEPTACLE, 20A. 250V. 3 WIRE, MOUNTED ON COL. INTER. OUTLET BOX.

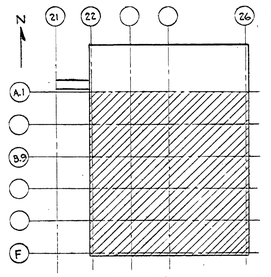

AS BUILT

REV.	BY	DATE	DESCRIPTION	C.I. NO.	APPROVED
3	JBT	3-15-78	REPLACE HIGH BAY LIGHTING	7480	
2	JJD	3-20-68	RELOCATED RECPT. & DELETED 2 LIGHTS	5560-22	
1	[illegible]	5-2-63	ADDED RECEPTACLE FOR A/C UNIT	5560-3	

NATIONAL AERONAUTICS AND SPACE ADMINISTRATION
M S F C
HUNTSVILLE, ALABAMA

VITRO ENGINEERING COMPANY A DIVISION OF VITRO CORPORATION OF AMERICA NEW YORK

ADDITION TO BUILDING 4619-LOAD TEST ANNEX
ELECTRICAL
LIGHTING & PWR. PLAN-TEST AREA EL. 661'-0" & 681'-0"

NASA AE CONT. NO. NASA 8-2185
FILE NO. MSFC 7437

SUBMITTED: [illegible] CHIEF, DES. BRCH.	APPROVAL RECOMMENDED: [illegible] LAB.	APPROVED: [illegible] CHIEF, ENGINEERING DIVISION
AE: [illegible] DATE: SEP 14 1962	DATE: 10-22-62	NASA DATE: 11-15-62
DESIGNED G.S. DRAWN G.S. CHECKED [illegible]	APPROVAL RECOMMENDED: [illegible] CHIEF, DESIGN SECTION	DRWG. NO. FE-C-4619-E-7
SCALE: 1/8"=1'-0"	DESIGN DATE: 10-22-62	
	SPEC. NO. FE-D-303	

MSFC MASTER BID DISK - 11-18-2013

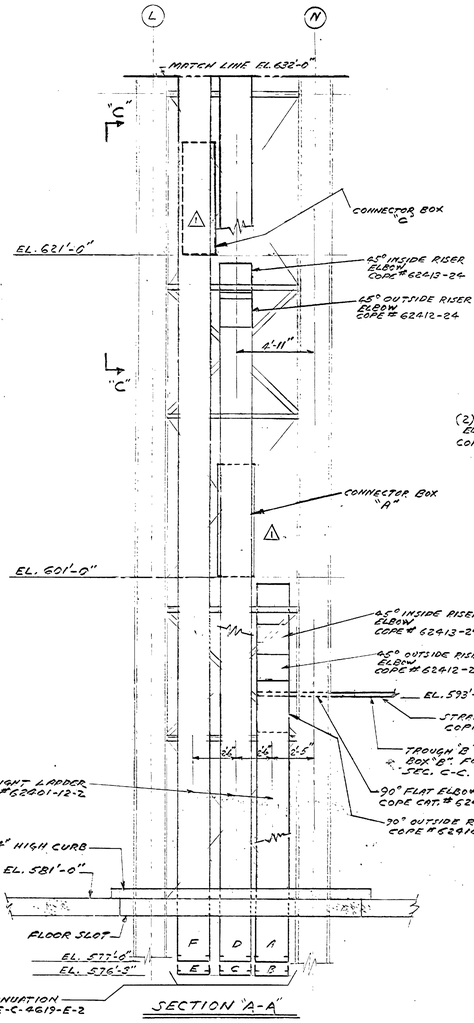

SECTION "A-A"

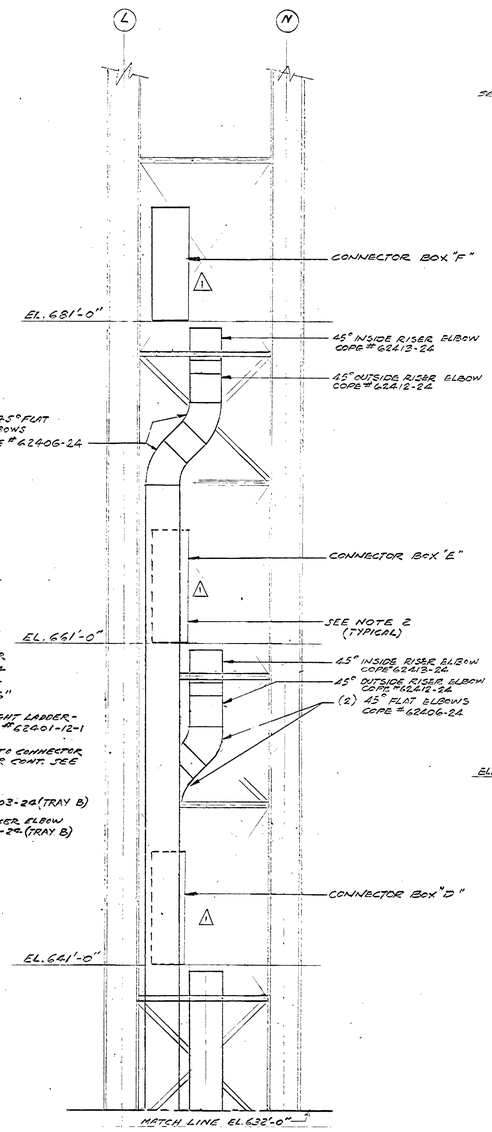

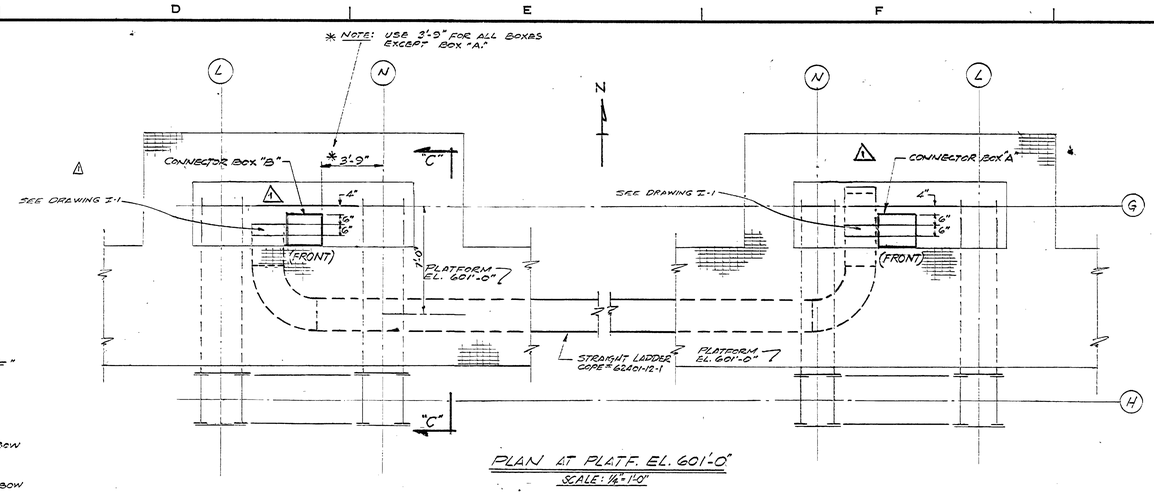

PLAN AT PLATF. EL. 601'-0"

SCALE: 1/4"-1'-0"

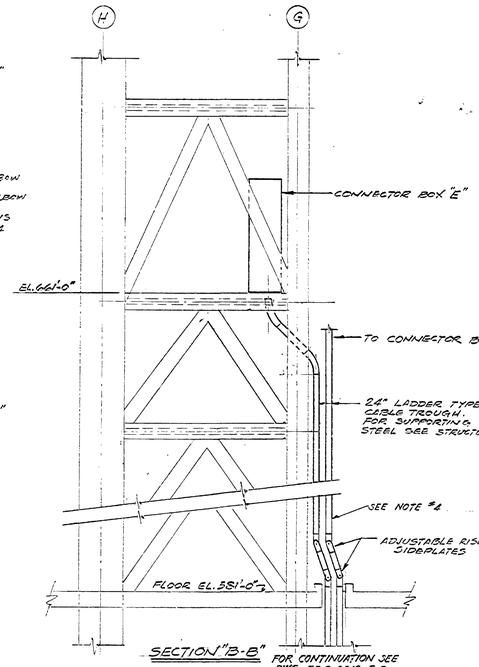

SECTION "B-B"

FOR CONTINUATION SEE DWG. FE-C-4619-E-2

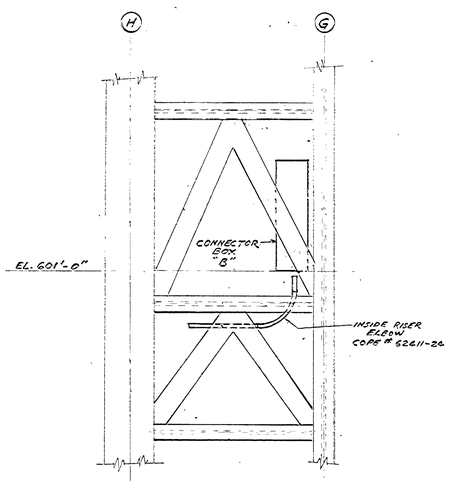

SECTION "C-C"

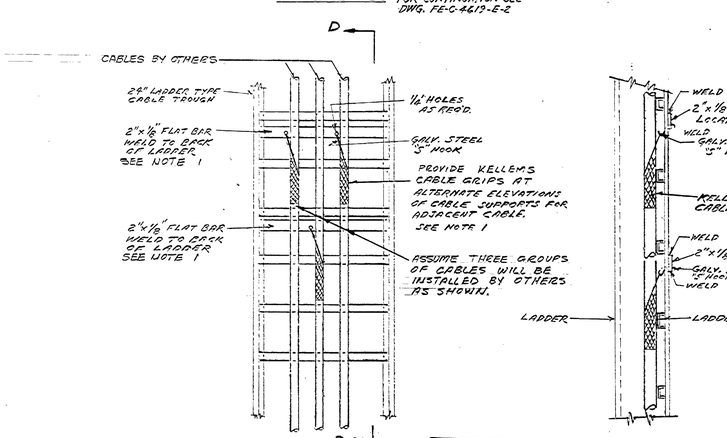

DETAIL #1 (No Scale)

TYPICAL METHOD OF SUPPORTING CABLES IN VERTICAL CABLE TROUGH

SECTION D-D

No Scale

APPROVED FOR SAFETY
Oct. 20 1962
DATE
GEN. ENGR. DAYTON OFFICE

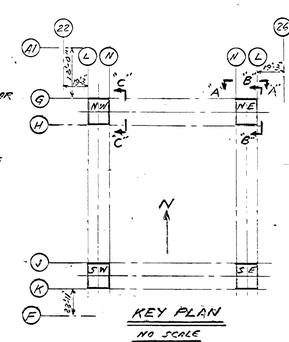

KEY PLAN

NO SCALE

REFERENCE DWGS.

FE-C-4619-E-2	ELECTRICAL - CONDUIT & GRD. BASEMENT PLAN TEST AREA - SECTION & DETAILS.
FE-C-4619-E-3	ELECTRICAL - CONDUIT & GRD. PLAN TEST AREA - EL. 581'-0" & COMPUTER AREA.

NOTES

1- INSTALL FLAT BARS FOR CABLE SUPPORTS AT A MAX. OF 20'-0" AND AS CLOSE AS PRACTICABLE TO THE ENTRANCE TO CONN. BOXES. THESE CABLE SUPPORTS ARE TO BE USED BY OTHERS FOR CABLES RUN IN VERTICAL TROUGHS.

2- FOR CONNECTION BOX SUPPORTING STEEL SEE STRUCTURAL DWGS.

3- REFERENCES TO MANUFACTURERS ARE USED TO ESTABLISH TYPE OF EQUIPMENT ONLY. EQUIPMENT BY OTHER MANUFACTURERS MAY BE USED WHEN EQUAL & SUITABLE FOR THE PURPOSE.

4- TRAYS SHALL BE SUPPORTED ON 5'-0" CENTERS. FOR LOCATION OF TRAY SUPPORTS ON N.E. TOWER SEE DWG. FS-C-4619-S-10.

5- FOR CONDUIT CONNECTIONS TO CONNECTOR BOXES SEE DWG. FE-C-4619-E-3.

6- FOR GENERAL NOTES SEE DWG. FE-C-4619-E-16.

7- ALL HORIZONTAL TRAYS SHALL HAVE 6" RUNG SPACING. ALL VERTICAL TRAYS SHALL HAVE 9" RUNG SPACING.

8- ALL TRAYS SHALL BE TERMINATED 6" BELOW OPENING. ⚠

9- ALL TRAY RUNS TO CONNECTOR BOXES SHALL BE MADE WITH MINIMUM 6" CLEARANCE BETWEEN TOP OF TRAY AND STEEL BRACING.

AS BUILT

REV.	BY	DATE		C.I. NO.	APPROVED
⚠	JWS	4-2-63	DELETED LEFT SIDE CONNECTOR BOX IN LOCATIONS A, B, C, D, E & F	5560-3	

NATIONAL AERONAUTICS AND SPACE ADMINISTRATION — M S F C — HUNTSVILLE, ALABAMA

VITRO ENGINEERING COMPANY A DIVISION OF VITRO CORPORATION OF AMERICA NEW YORK

ADDITION TO BLDG. 4619-LOAD TEST ANNEX
ELECTRICAL
TROUGH DETAILS - NE & NW TOWERS

NASA AE CONT. NO. NASA 8-2145 — FILE NO. MSFC 7438

SUBMITTED: CHIEF DES. ENGR. Sept. 9 1962	APPROVAL RECOMMENDED: LAB DATE: Sept. 14, 1962	APPROVED: CHIEF, ENGINEERING BRANCH	
DESIGNED NS DRAWN NS CHECKED RC	APPROVAL RECOMMENDED: CHIEF, DESIGN SECTION DESIGN DATE: 10-24-62	NASA DATE: 10-25-62	DRWG. NO. FE-C-4619-E-8
SCALE: 1/8" = 1'-0"	SPEC. NO. FE-D-303		

MSFC MASTER BID DISK 11-18-2013

DIETZGEN PRESS INC., BROOKLYN 19, N.Y. STOCK NO. 449

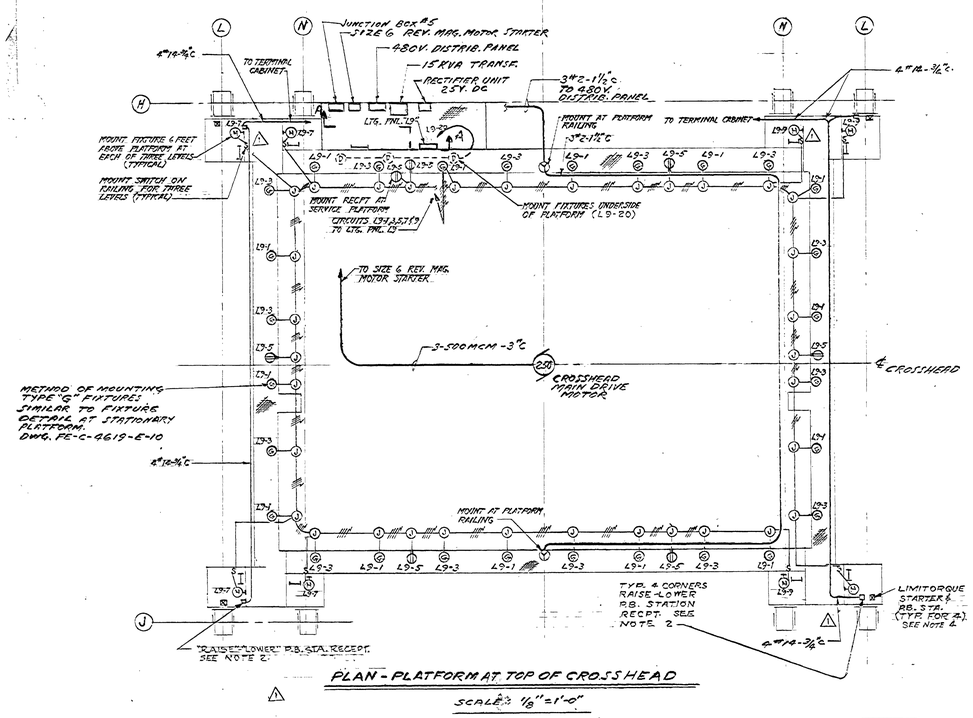

PLAN - PLATFORM AT TOP OF CROSSHEAD

SCALE: ⅛" = 1'-0"

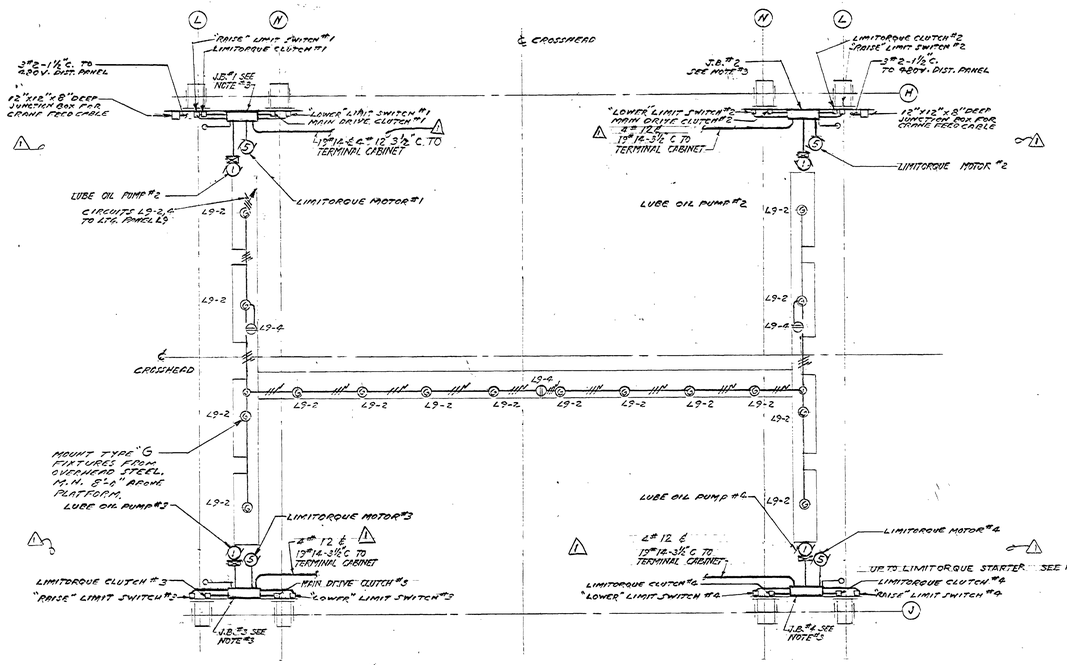

PLAN - PLATFORM BELOW TOP OF CROSSHEAD

SCALE: ⅛" = 1'-0"

NOTES

1- FOR SYMBOLS & GENERAL NOTES SEE DWG. FE-C-4619-E-16

2- "RAISE"-"LOWER" PUSHBUTTON STATION RECEPTACLE TO BE BOX RECEPTACLE - SOLID SHELL WITH 4 #12 PIN CONTACTS AMPHENOL CAT. # MS3102 A-20-4P MOUNTED ON BLANK COVER, DRILLED TO SUIT, OF SINGLE GANG "FD" CONDULET WITH CAP & CHAIN AMPHENOL CAT. # 9760-20

3- TERMINAL BOX, STARTERS, SWITCHES, WIRING CONDUITS AND ALL OTHER LIMITORQUE EQUIPMENT SHALL BE FURNISHED AND INSTALLED AS SHOWN ON DWG. FE-C-4619-E-12.

4- MOUNT LIMITORQUE STARTER APPROXIMATELY 2'-6" ABOVE FLOOR OF TOP BOLTING PLATFORM, ADJACENT TO RAISE-LOWER RECEPTACLE. SEE ALSO DWG. E-12-1.

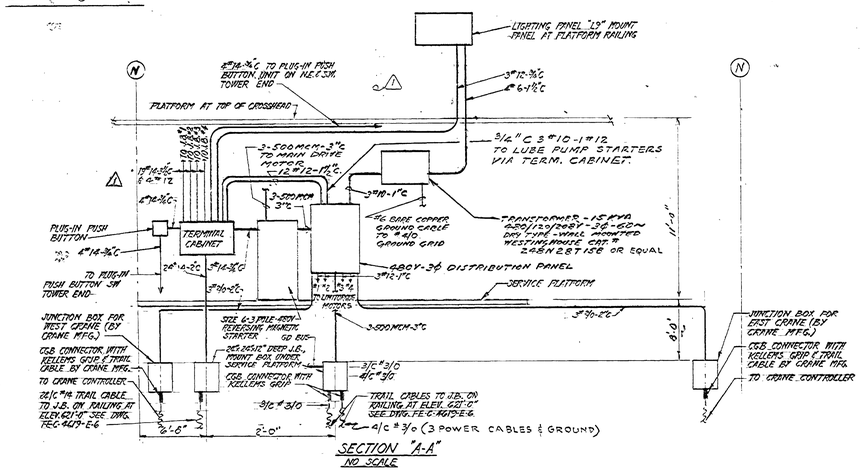

SECTION "A-A"

NO SCALE

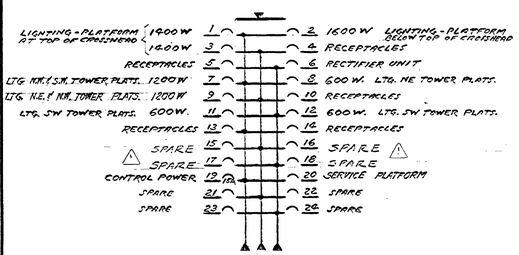

LIGHTING PANEL "L9"

3Ø-4W - 120/208V

SINGLE POLE 20A CIRCUIT BREAKERS (EXCEPT AS NOTED)

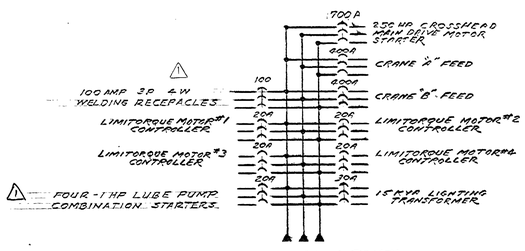

DISTRIBUTION PANEL

480V - 3Ø

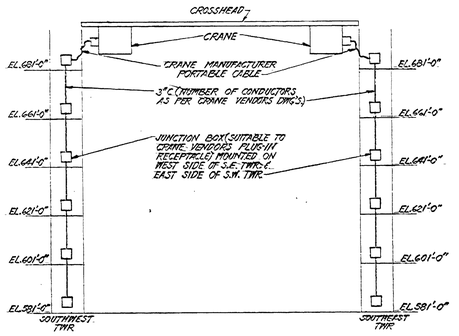

CRANE CONTROL RISER

NO SCALE

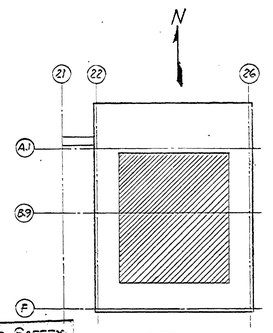

KEY PLAN

NO SCALE

APPROVED FOR SAFETY

OCT 20 1962

DATE

OPNL. SYNP. SAFETY OFFICE

AS BUILT

REV.	BY	DATE		C.I. NO.	APPROVED
1	J.M.	9-10-63	GENERAL ELECTRICAL REVISIONS	5560-22	

NATIONAL AERONAUTICS AND SPACE ADMINISTRATION — M S F C, HUNTSVILLE, ALABAMA

VITRO ENGINEERING COMPANY A DIVISION OF VITRO CORPORATION OF AMERICA — NEW YORK

ADDITION TO BLDG. 4619 - LOAD TEST ANNEX

ELECTRICAL

POWER & LIGHTING - CROSSHEAD

NASA AE CONT. NO. NASA 8-2145 — FILE NO. M S F C 7439

SUBMITTED: CHIEF DES. SYNCH.	APPROVAL RECOMMENDED:	APPROVED: CHIEF, ENGINEERING BRANCH	
A.E. DATE: SEP. 14, 1962	L&N DATE: 10-22-62	NASA DATE: 10-25-62	
DESIGNED: N.S.	APPROVAL RECOMMENDED:	DRWG. NO.	
DRAWN: N.S.	CHIEF, DESIGN SECTION		
CHECKED: AC	DESIGN DATE: 10-24-62	FE-C-4619-E-9	
SCALE: AS NOTED	SPEC. NO. FE-D-303		

MSFC MASTER BID DISK 11-18-2013

DIETZGEN PRINT, INC., BROOKLYN 17, N. Y. STOCK NO. 449

FORM No. 1000.807-0
SECTION D-D
SCALE: 1/4" = 1'-0"
INCOMING & METERING CUBICLE
TRANSFORMER 750 KVA 4160-480
BUS TRANSITION COMPT.
480 VOLT SWITCHGEAR
SECTION E-E
SCALE: 1/4" = 1'-0"
4160V INCOMING CUBICLE
TRANSFORMER 300 KVA 4160-120/208V
120-208V BREAKER COMPARTMENT
SECTION G-G
NO SCALE
440V-3Ø-3W-400AMP BUS DUCT
120/208V-3Ø-4W-400A BUS DUCT.
FLOOR
400 CYCLE DISTRIBUTION PANEL
3Ø, 4W, 120/208V 400~
THREE POLE, 25A, CIRCUIT BREAKERS
60~ REGULATED DISTRIBUTION PANEL
3Ø, 4W, 120/208V, 60~
20A, CIRCUIT BREAKERS EXCEPT
100A CIRCUIT BREAKER FOR CKT.# 11
LABORATORY BENCH #1
LABORATORY BENCH #2
SPARE
480V SWITCHGEAR
NO SCALE
BUS TRANSITION COMPARTMENT
MOTOR CONTROL CENTER NO.1
NO SCALE
MOTOR CONTROL CENTER NO. 2
NO SCALE
LIGHTING PANEL "L3"
3Ø, 4W, 120/208V
SINGLE POLE - 20A, CIRCUIT BREAKERS
THREE POLE - 60A, CIRCUIT BREAKERS
LIGHTING PANEL "L4"
3Ø, 4W, 120/208V
SINGLE POLE - 20A, CIRCUIT BREAKERS
THREE POLE - 60A, CIRCUIT BREAKERS
60~ UNREGULATED DISTRIBUTION PANEL
3Ø, 4W, 120/208V 60~
15A, CIRCUIT BREAKERS
LIGHTING PANEL "L5"
3Ø, 4W, 120/208V
SINGLE POLE - 20A, CIRCUIT BREAKERS
THREE POLE - 60A, CIRCUIT BREAKERS
LIGHTING PANEL "L6"
3Ø, 4W, 120/208V
SINGLE POLE - 20A, CIRCUIT BREAKERS
THREE POLE - 60A, CIRCUIT BREAKERS
D.C. DISTRIBUTION PANEL
25V D.C.
20A, CIRCUIT BREAKERS
RISER AT STAIR NO. 4
DETAIL #1
FIXTURE DETAIL AT STATIONARY & REMOVABLE PLATFORMS
NO SCALE
DETAIL "1A"
R-RECEPTACLE SIDE
C-CABLE CONNECTOR SIDE
DETAIL #2
FIXTURE DETAIL AT MOVABLE PLATFORM
NO SCALE
DETAIL "2B"
R-RECEPTACLE SIDE
C-CABLE CONNECTOR SIDE
DETAIL "2C"
DETAIL "D"
SCALE: 1/2" = 1'-0"
DETAIL "E"
SCALE: 1/2" = 1'-0"
SECTION "F-F"
DWG. FE-C-4619-E-2
SCALE: 1/2" = 1'-0"
EXISTING DUCT BANK
AS BUILT
REFERENCE DRAWINGS:
FE-C-4619-E-2 ELECTRICAL-CONDUIT & GRD. BSMT. PLAN-TEST AREA SECT. & DETS.
FE-C-4619-E-3 ELECTRICAL-CONDUIT & GRD. PLAN-TEST AREA EL. 581'-0" & COMPUTER ROOM
FE-C-4619-E-6 ELECTRICAL-LIGHTING & PWR. PLAN-TEST AREA EL. 601'-0", EL. 621'-0" & EL. 641'-0"
FE-C-4619-E-7 ELECTRICAL-LIGHTING & PWR. PLAN-TEST AREA EL. 661'-0" & EL. 681'-0"
FE-C-4619-E18 ELECTRICAL LIGHTING TEST AREA EL. 581'-0"
APPROVED FOR SAFETY
CHANGED CIR. BKRS IN PANELS L3, L4, L5 & L6
NATIONAL AERONAUTICS AND SPACE ADMINISTRATION
MSFC
HUNTSVILLE, ALABAMA
VITRO ENGINEERING COMPANY
NEW YORK
ADDITION TO BLDG. 4619 - LOAD TEST ANNEX
ELECTRICAL
MISC. DETAILS & SECTIONS
NASA AE CONT. NO. NASA 8-2145
FILE NO. MSFC 7440
SCALE: NONE
SPEC. NO. FE-10-303
DRWG. NO. FE-C-4619-E-10
MSFC MASTER BID DISK 11-18-2013

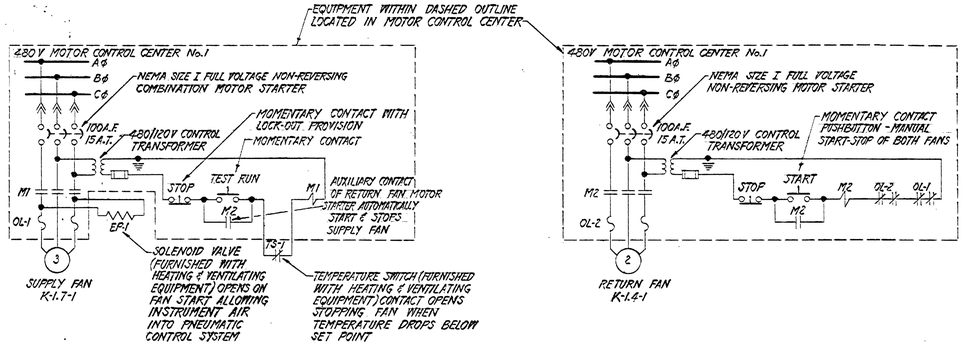

H&V SYSTEM K-1 - BASEMENT

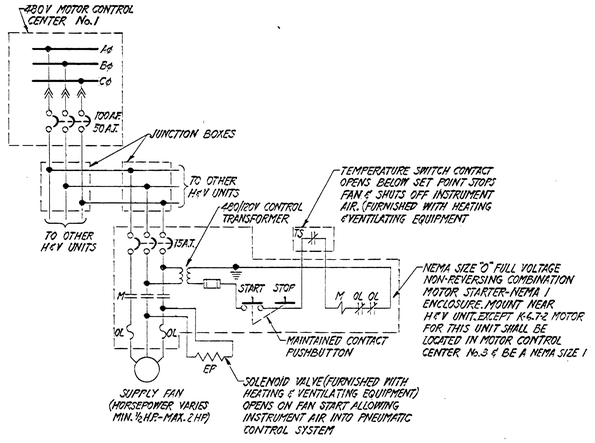

TYPICAL CONTROL DIAGRAM FOR H&V SYSTEMS K-6 THRU K-10

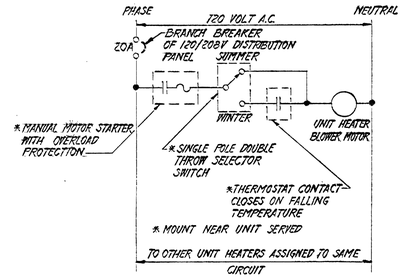

TYPICAL CONTROL DIAGRAM FOR UNIT HEATERS SYSTEMS K-5, K-6, K-7, K-8 & K-12

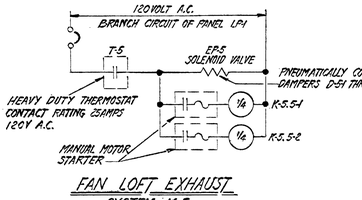

FAN LOFT EXHAUST SYSTEM K-5

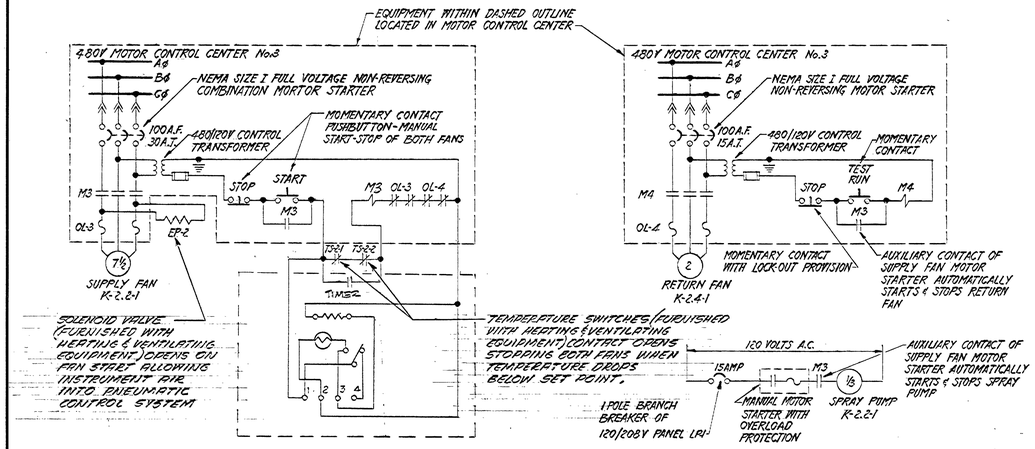

A.C. SYSTEM K-2 OFFICE & INSTRUMENT ROOMS

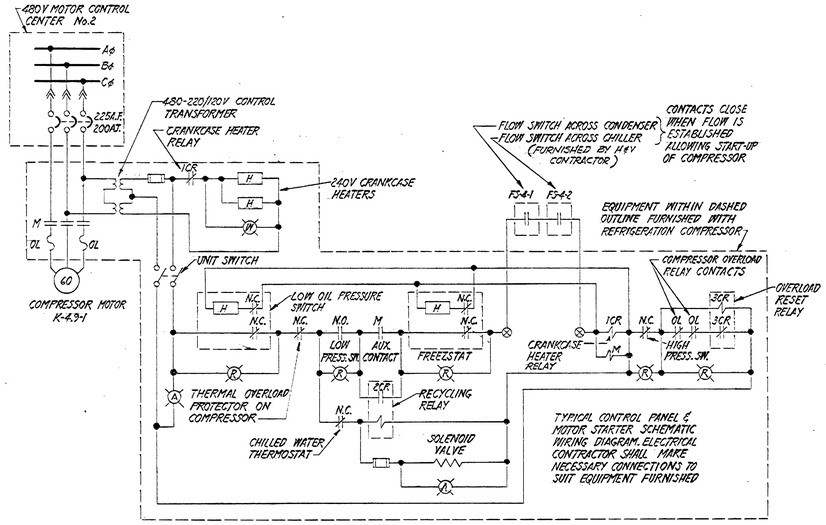

COMPRESSOR K-4.9-1

REFRIGERATION SYSTEM K-4

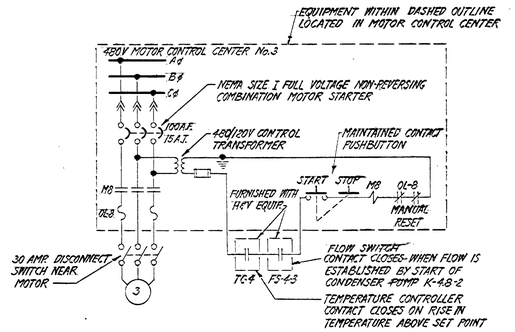

COOLING TOWER K-4.10-1

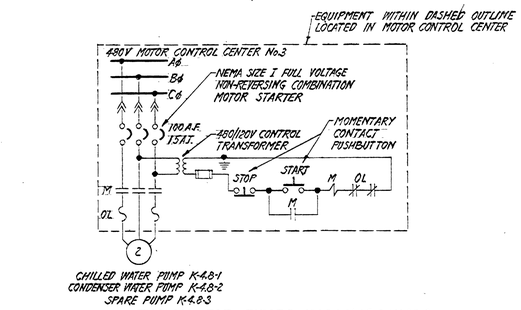

TYPICAL FOR PUMPS K-4.8-1, K-4.8-2 & K-4.8-3

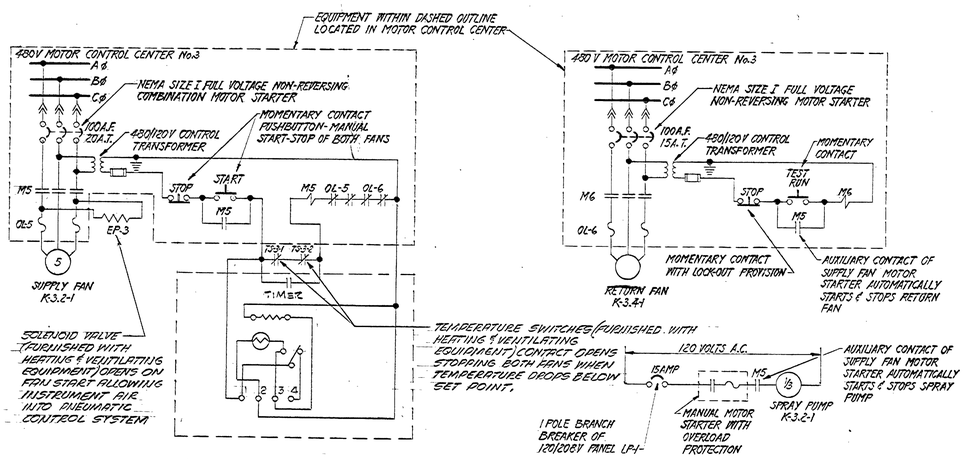

H.V.A.C. SYSTEM K-3 COMPUTER ROOM

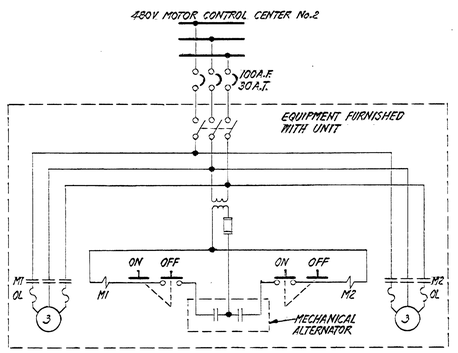

DUPLEX CONDENSATE RETURN PUMP K-13.1-1

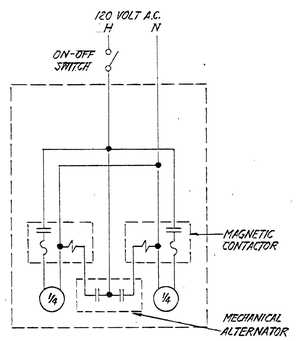

DUPLEX CONDENSATION RETURN UNIT TYPICAL FOR K-13.1-2 & K-13.1-3

REFERENCE DRAWINGS

FE-C-4619-E-1 ELECTRICAL ONE LINE DIAGRAM
FE-C-4619-AC-1 HVAC FLOW & CONTROL DIAGRAMS

AS BUILT

REV.	BY	DATE		C.I. NO.	APPROVED
1	MBP	3-27-69	AS BUILT		EO

NATIONAL AERONAUTICS AND SPACE ADMINISTRATION — M S F C, HUNTSVILLE, ALABAMA

VITRO ENGINEERING COMPANY A DIVISION OF VITRO CORPORATION OF AMERICA NEW YORK

ADDITION TO BUILDING 4619-LOAD TEST ANNEX
ELECTRICAL SCHEMATIC WIRING DIAGRAMS HVAC SYSTEMS

NASA AE CONT. NO. NASA 8-2145 — FILE NO. MSFC 7441

SUBMITTED: H.R. Wiegand — CHIEF, DESIGN ENGR. — AE DATE: SEP. 12, 1962	APPROVAL RECOMMENDED: — LAV DATE: 10-22-62	APPROVED: — CHIEF, ENGINEERING BRANCH. — NASA DATE: 1/10-25-62
DESIGNED — DRAWN: K. Koenig — CHECKED: RC — SCALE: NONE	APPROVAL RECOMMENDED: — CHIEF, DESIGN SECTION — DESIGN DATE: 10-24-62 — SPEC. NO. FE-D-303	DRWG. NO. FE-C-4619-E-11

APPROVED FOR SAFETY — SAFETY OFFICE — OCT 20 1962 DATE

MSFC MASTER BID DISK 11-18-2013

OUTLINE PRESS, INC., BROOKLYN N.Y. STOCK NO. 450

FORM No. 1000.80P&J

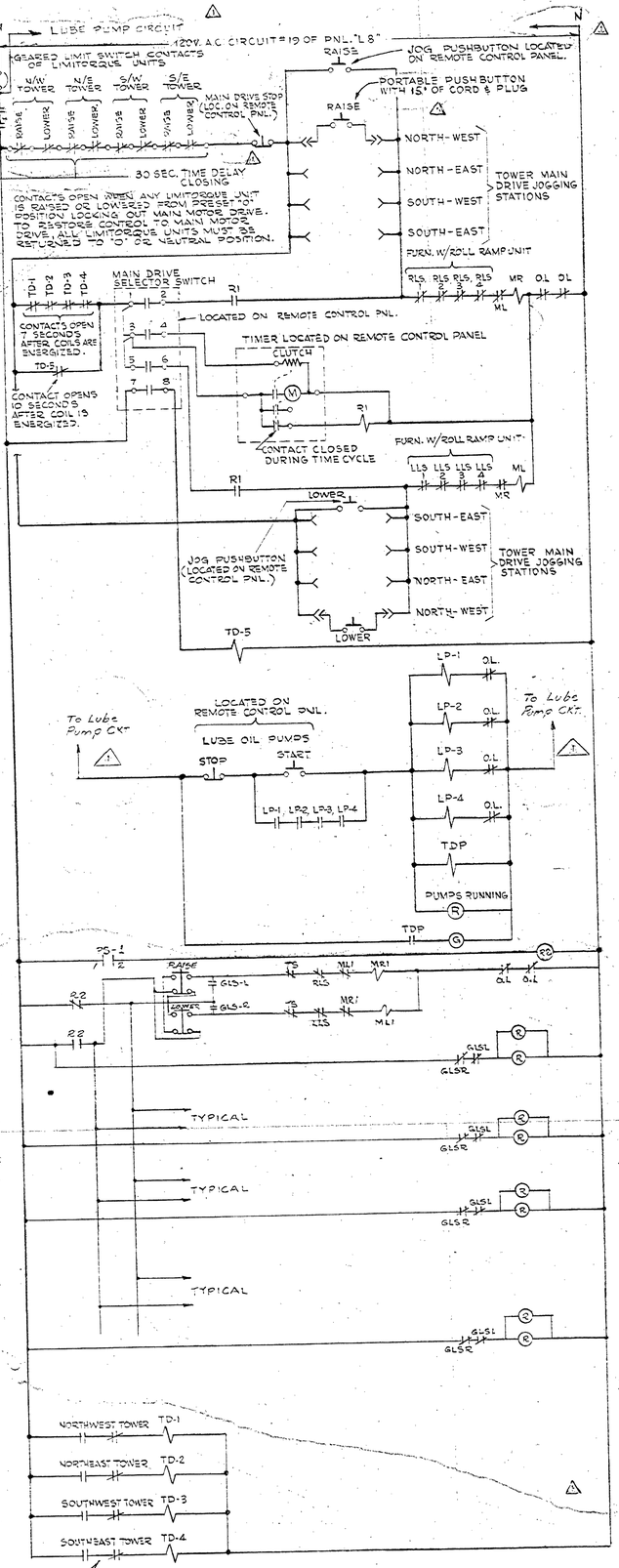

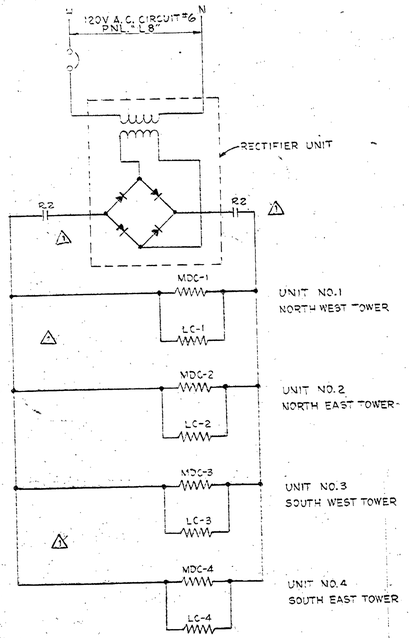

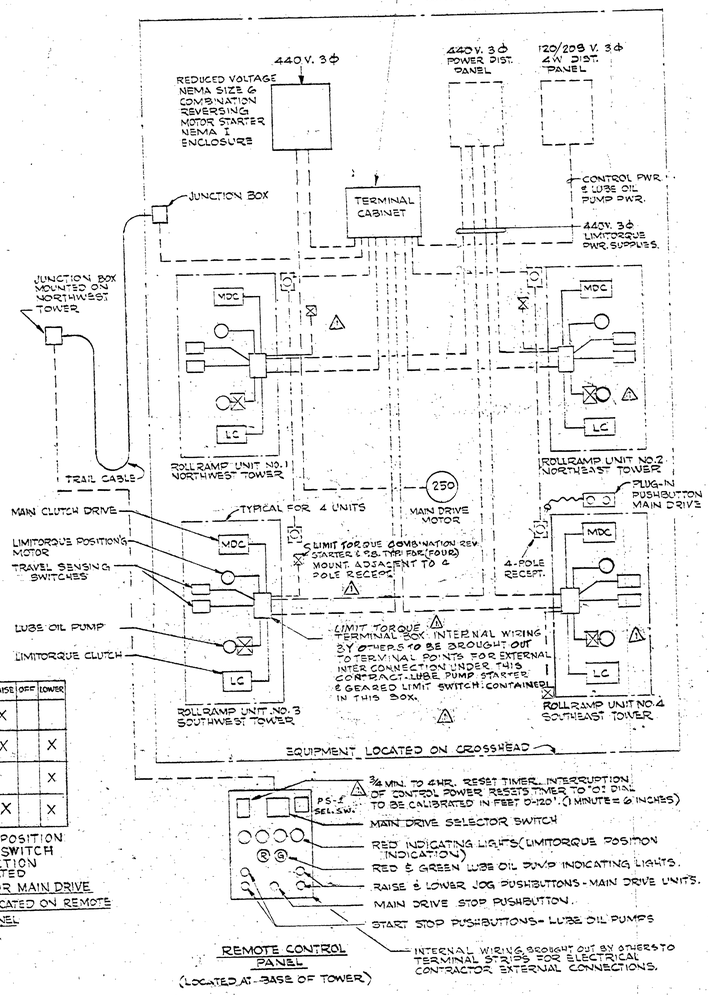

SYMBOLS.

- (R) INDICATING LAMP R = RED, G = GREEN.
- TDP OR TD-1 THRU TD-5 — TIME DELAY RELAY (ADJUSTABLE AGASTAT OR EQ (RELAYS)
- MOTOR STARTER CONTACTOR COIL.
- (NORMALLY CLOSED) / (NORMALLY OPEN) — RELAY, AUX. SWITCH OR LIMIT SWITCH CONTACT.
- CONTACT OF MANUALLY OPERATED SELECTOR SWITCH.
- MOMENTARY CONTACT PUSHBUTTON - (NORMALLY CLOSED) / (NORMALLY OPEN)
- << PLUG-IN DEVICE.
- MR, ML — MAIN DRIVE MOTOR STARTER CONTACTOR COIL. R = RAISE, L = LOWER
- PS-1 LIMITORQUE UNIT DRIVE SELECTOR SWITCH.
- RLS-1 RAISE LIMIT SWITCH. EXTREME RAISE POSITION (IN LIMITORQUE UNIT) EXTREME LOWER POSITION
- LLS-1 LOWER LIMIT SWITCH.
- MR1, ML1 — LIMITORQUE CONTACTOR COIL, R = RAISE, L = LOWER.
- LP-1 LUBE OIL PUMP MOTOR STARTER CONTACTOR COIL.
- O.L. OVERLOAD RELAY CONTACT.
- R1 — RELAY WITH 2-NORMALLY OPEN CONTACTS.
- MDC-1 - MAIN DRIVE CLUTCH - DISENGAGED WHEN ENERGIZED.
- LC - LIMITORQUE CLUTCH - ENGAGED WHEN ENERGIZED.
- GLS-R - GEARED LIMIT SWITCH - RAISE; GLS-L - GEARED LIMIT SWITCH - LOWER — (IN LIMITORQUE UNIT) INTERMEDIATE POSITION OF OPERATOR - GLS-R & L OPERATE WHEN LIMITORQUE MOVES OFF ZERO IN RAISE OR LOWER DIRECTION.

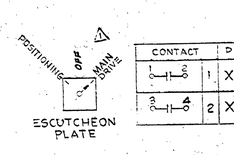

OPERATION

AUTOMATIC RUN FOR PRESELECTED DISTANCE.

STEP-1 START LUBRICATING OIL PUMPS BY PRESSING PUSHBUTTON MARKED LUBE OIL PUMPS - RED LIGHT INDICATES PUMPS HAVE BEEN STARTED. 30 SECONDS LATER GREEN LIGHT WILL INDICATE MAIN DRIVE IS READY TO BE STARTED.

STEP-2 MOVE SELECTOR SWITCH TO RAISE OR LOWER POSITION

STEP-3 SET TIMER TO DESIRED DISTANCE OF TRAVEL. CROSS HEAD WILL TRAVEL SET DISTANCE & STOP. CROSS HEAD MAY BE STOPPED AT ANY TIME BY PRESSING "STOP" BUTTON WHICH ALSO CANCELS & RESETS TIMER. CONTROL POWER FAILURE OR MOTOR OVERLOAD ALSO CANCELS & RESETS TIMER.

POSITIONING CROSS HEAD FOR BOLTING.

PORTABLE PUSHBUTTON ALLOWS OPERATOR TO CONTROL MAIN DRIVE FROM ANY CORNER OF CROSSHEAD.

SELECTOR SWITCH & JOG PUSHBUTTON ON LIMITORQUE UNITS ALLOW FOR RAISING OR LOWERING EACH CORNER INDIVIDUALLY TO ALIGN BOLT HOLES. RAISING OR LOWERING ANY CORNER OF THE CROSSHEAD BY USE OF LIMITORQUE MOTORS LOCKS OUT MAIN DRIVE UNIT CONTROL TO RESTORE CONTROL TO MAIN DRIVE UNIT, LIMITORQUE UNITS MUST BE RETURNED TO THEIR ORIGINAL POSITION.

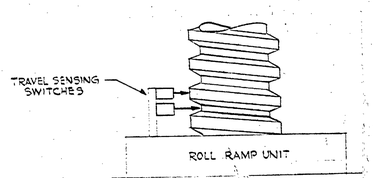

DETAIL "A"

ELECTRICAL BLOCK DIAGRAM OF CROSS HEAD POSITIONER

ELECTRICAL CONTRACTOR SHALL FURNISH & INSTALL & CONNECT ALL ITEMS DESIGNATED BY DASHED LINES (— — —). ALL NECESSARY ELECTRICAL COMPONENTS FOR A COMPLETE OPERATING PACKAGE EXCEPT AS SPECIFICALLY NOTED OTHERWISE, SHALL BE GOVERNMENT FURNISHED, CONTRACTOR INSTALLED. MAJOR COMPONENTS FURNISHED BY THE GOVERNMENT ARE DESIGNATED BY SOLID LINES.

AS BUILT

REV.	BY	DATE		C.I. NO.	APPROVED
1	L.M.	12-7-62	REVISED ELECTRICAL DIAG.	—	

NATIONAL AERONAUTICS AND SPACE ADMINISTRATION — M S F C, HUNTSVILLE, ALABAMA

VITRO ENGINEERING COMPANY A DIVISION OF VITRO CORPORATION OF AMERICA — NEW YORK

ADDITION TO BUILDING 4619 - LOAD TEST ANNEX.
ELECTRICAL SCHEMATIC WIRING DIAGRAM, CROSSHEAD POSITIONING SYSTEM.

NASA AE CONT. NO. NASA 8-2145 — FILE NO. MSFC 7442

SUBMITTED: C.E. Walker	APPROVAL RECOMMENDED:	APPROVED:	
CHIEF, DES. ENGR.	LAY. DES.	CHIEF, ENGINEERING BRANCH	
AE. DATE: Sept. 14, 1962	APPROVAL RECOMMENDED:	NASA DATE: 1-10-63	DRWG. NO.
DESIGNED / DRAWN / CHECKED: LARSEN	CHIEF, DESIGN SECTION		FE-C-4619-E-12.
SCALE: NONE	DESIGN DATE: 10-24-62	SPEC. NO. FE-D-303	

MSFC MASTER BID DISK 11-18-2013

FORM No. 1000.807-0

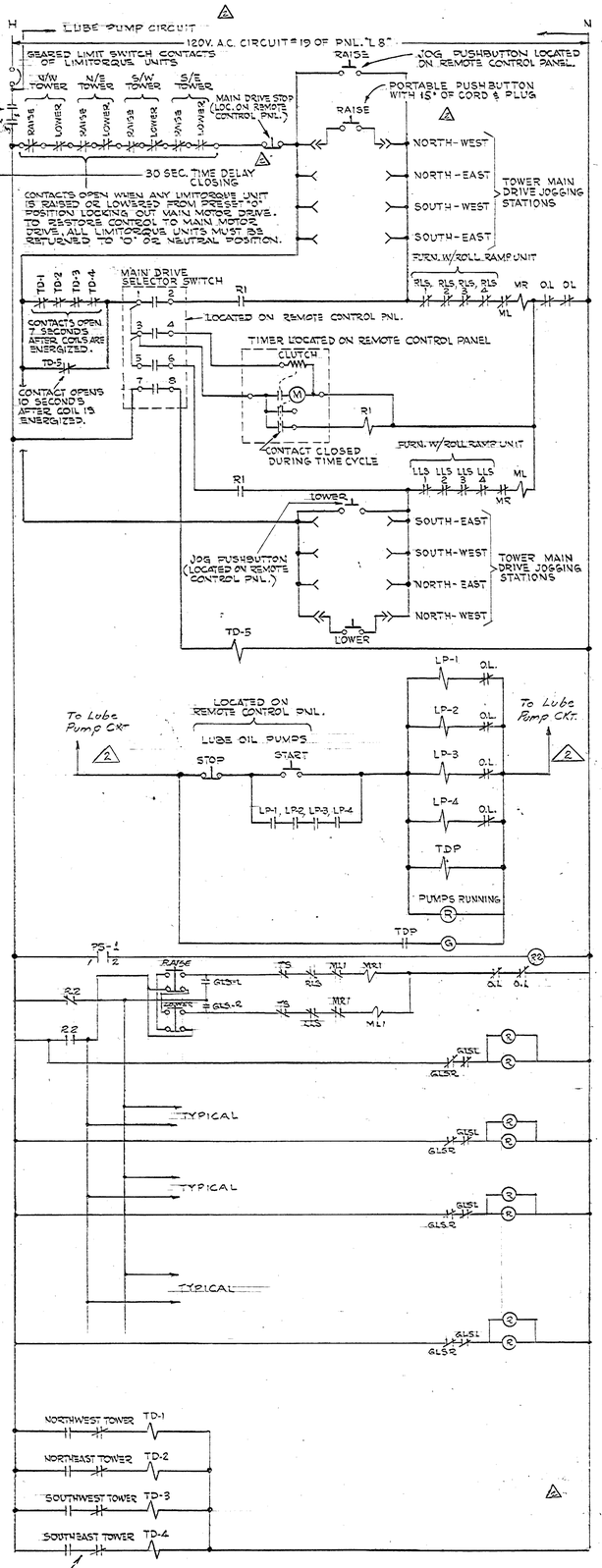

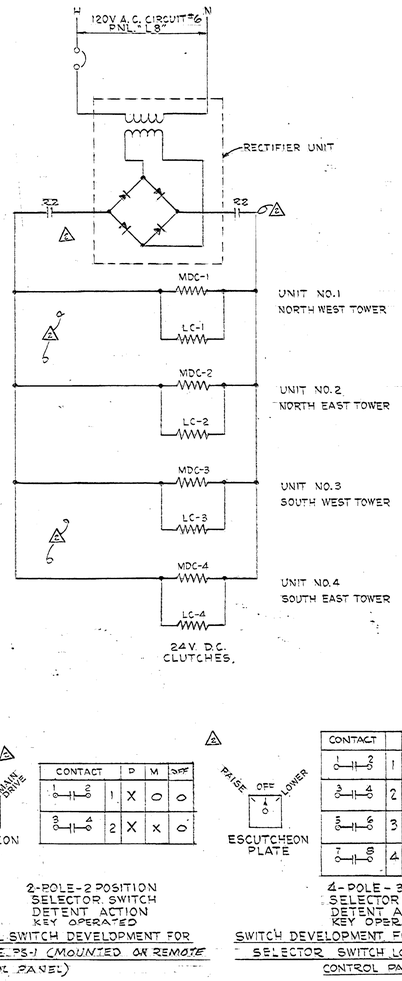

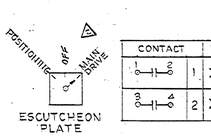

2-POLE-2 POSITION SELECTOR SWITCH DETENT ACTION KEY OPERATED

TYPICAL SWITCH DEVELOPMENT FOR SWITCHE PS-1 (MOUNTED ON REMOTE CONTROL PANEL)

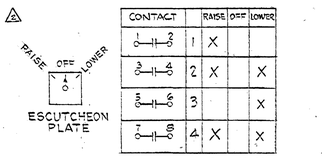

4-POLE-3 POSITION SELECTOR SWITCH DETENT ACTION KEY OPERATED

SWITCH DEVELOPMENT FOR MAIN DRIVE SELECTOR SWITCH LOCATED ON REMOTE CONTROL PANEL

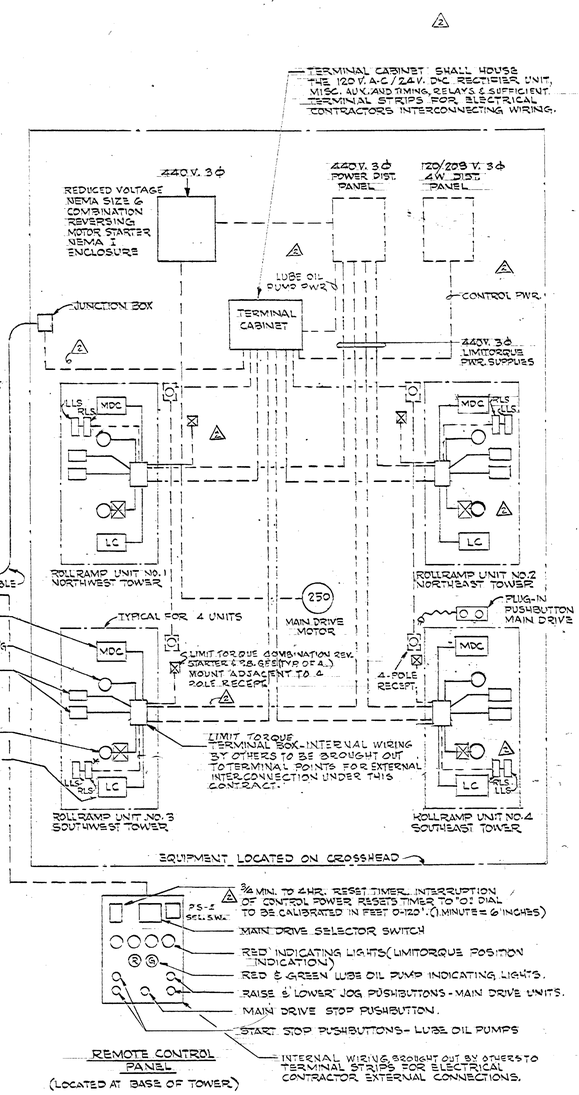

SYMBOLS.

- (R) — INDICATING LAMP R = RED, G = GREEN.
- TDP OR TD-1 THRU TD-5 — TIME DELAY RELAY. (ADJUSTABLE AGASTATOR E0 (RELAYS)
- MOTOR STARTER CONTACTOR COIL.
- (NORMALLY CLOSED) / (NORMALLY OPEN) } RELAY, AUX. SWITCH OR LIMIT SWITCH CONTACT.
- CONTACT OF MANUALLY OPERATED SELECTOR SWITCH.
- MOMENTARY CONTACT PUSHBUTTON - (NORMALLY CLOSED)
- " " - (NORMALLY OPEN)
- << PLUG-IN DEVICE.
- MR / ML } MAIN DRIVE MOTOR STARTER CONTACTOR COIL, R = RAISE, L = LOWER.
- PS-1 LIMITORQUE UNIT DRIVE SELECTOR SWITCH.
- RLS-1 RAISE LIMIT SWITCH, EXTREME RAISE POSITION
- LLS-1 LOWER LIMIT SWITCH, EXTREME LOWER POSITION
- MR1 / ML1 } LIMITORQUE CONTACTOR COIL, R = RAISE, L = LOWER.
- LP-1 LUBE OIL PUMP MOTOR STARTER CONTACTOR COIL.
- O.L. OVERLOAD RELAY CONTACT.
- R1 RELAY WITH 2-NORMALLY OPEN CONTACTS.
- MDC-1 - MAIN DRIVE CLUTCH - DISENGAGED WHEN ENERGIZED.
- LC - LIMITORQUE CLUTCH - ENGAGED WHEN ENERGIZED.
- GLS-R = GEARED LIMIT SWITCH - RAISE / GLS-L = GEARED LIMIT SWITCH - LOWER } (IN LIMITORQUE UNIT) INTERMEDIATE POSITION OF OPERATOR - GLS-R & L OPERATE WHEN LIMITORQUE MOVES OFF ZERO IN RAISE OR LOWER DIRECTION.
- ☒ — COMBINATION CIRCUIT BREAKER STARTER.

OPERATION

AUTOMATIC RUN FOR PRESELECTED DISTANCE

STEP-1 START LUBRICATING OIL PUMPS BY PRESSING PUSHBUTTON MARKED LUBE OIL PUMPS - RED LIGHT INDICATES PUMPS HAVE BEEN STARTED. 30 SECONDS LATER GREEN LIGHT WILL INDICATE MAIN DRIVE IS READY TO BE STARTED.

STEP-2 MOVE SELECTOR SWITCH TO RAISE OR LOWER POSITION

STEP-3 SET TIMER TO DESIRED DISTANCE OF TRAVEL. CROSS HEAD WILL TRAVEL SET DISTANCE & STOP. CROSS HEAD MAY BE STOPPED AT ANY TIME BY PRESSING "STOP" BUTTON WHICH ALSO CANCELS & RESETS TIMER. CONTROL POWER FAILURE OR MOTOR OVERLOAD ALSO CANCELS & RESETS TIMER.

POSITIONING CROSS HEAD FOR BOLTING.

PORTABLE PUSHBUTTON ALLOWS OPERATOR TO CONTROL MAIN DRIVE FROM ANY CORNER OF CROSSHEAD.

SELECTOR SWITCH & JOG PUSHBUTTON ON LIMITORQUE UNITS ALLOW FOR RAISING OR LOWERING EACH CORNER INDIVIDUALLY TO ALIGN BOLT HOLES, CASINGS OR LOWERING ANY CORNER OF THE CROSSHEAD BY USE OF LIMITORQUE MOTOR'S LOCK OUT MAIN DRIVE UNIT CONTROL. TO RESTORE CONTROL TO MAIN DRIVE UNIT, LIMITORQUE UNITS MUST BE RETURNED TO THEIR ORIGINAL POSITION.

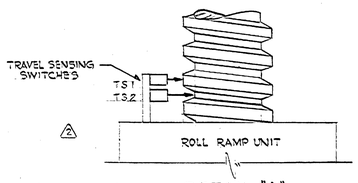

DETAIL "A"

ELECTRICAL BLOCK DIAGRAM OF CROSS HEAD POSITIONER

ELECTRICAL CONTRACTOR SHALL FURNISH & INSTALL & CONNECT ALL ITEMS DESIGNATED BY DASHED LINES (— — — —). ALL NECESSARY ELECTRICAL COMPONENTS FOR A COMPLETE OPERATING PACKAGE EXCEPT AS SPECIFICALLY NOTED OTHERWISE, SHALL BE GOVERNMENT FURNISHED, CONTRACTOR INSTALLED. MAJOR COMPONENTS FURNISHED BY THE GOVERNMENT ARE DESIGNATED BY SOLID LINES.

APPROVED FOR SAFETY
Safety Engr. OCT 20 1962
SAFETY OFFICE DATE

AS BUILT

REV.	BY	DATE		C.E. NO.	APPROVED
2	J.M.	9-10-62	REVISED ELECT. BLOCK DIAGRAM	5540-22	
1	AWS	11-1-62	REISSUED FOR PHASE "B"	—	

NATIONAL AERONAUTICS AND SPACE ADMINISTRATION — M S F C HUNTSVILLE, ALABAMA

VITRO ENGINEERING COMPANY A DIVISION OF VITRO CORPORATION OF AMERICA NEW YORK

ADDITION TO BUILDING 4619-LOAD TEST ANNEX. ELECTRICAL SCHEMATIC WIRING DIAGRAM, CROSSHEAD POSITIONING SYSTEM.

NASA AE CONT. NO. NASA 8-2145 — FILE NO. MSFC 7442

SUBMITTED: CHIEF, DES. SECT.	APPROVAL RECOMMENDED:	APPROVED: CHIEF, ENGINEERING BRANCH
A.E. DATE: SEPT. 14, 1962	LAW DATE: 10-02-62	NASA DATE: 1-10-63
DESIGNED / DRAWN / CHECKED: LARSEN	APPROVAL RECOMMENDED: CHIEF, DESIGN SECTION	DRWG. NO. FE-C-4619-E12.1
SCALE: None	DESIGN DATE: 10-24-62	
	SPEC. NO. FE-D-303	

MSFC MASTER BID DISK 11-18-2013

NOTES

1. IN BASEMENT AREA, ALL LIGHTING FIXTURES SHALL BE INSTALLED AFTER H&V DUCTS & CABLE TRAYS
2. FOR SYMBOLS AND GENERAL NOTES SEE DWG. FE-C-4619-E16
3. IN BASEMENT AREA AND TUNNEL ALL FIXTURES SHALL BE MOUNTED 9'-0" ABOVE FLOOR WHERE PRACTICABLE.
4. RECEPTACLES FOR BATTERY OPERATED EMERGENCY LIGHTS SHALL BE MOUNTED 7'-0" ABOVE FINISHED FLOOR.

REFERENCE DRAWINGS:

FE-C-4619-E2 - CONDUIT & GROUNDING BASEMENT PLAN & TUNNEL.

RAMP
FOR LIGHTING
SEE DWG. FE-C-4619-E-16

UP, FOR CONT. SEE DWG. FE-C-4619-E-14

FOR STAIR LIGHTING SEE DWG. FE-C-4619-E-14

BASEMENT
ALL FIXTURES IN THIS AREA TYPE "E"
SEE NOTE #3

CABLE TRAYS

CKT. LI-11 - LI-2

CKTS. LI-4,6,7,9 1"C

CKTS. LI-8, 10, 12, 5, 3

CKTS. LI-8, 10

LTG. PNL. LI-1

CKTS. LI-10, 12

INSTRUMENTATION TUNNEL

ALL FIXTURES IN THIS AREA TYPE "E"
SEE NOTE #3

ALL FIXTURES IN THIS AREA TYPE "E"

INSTRUMENTATION TUNNEL

MATCH LINE

SN

BASEMENT, 1500W	1	2	1800W, BASEMENT
BASEMENT, 1600W	3	4	1400W, INSTR. TUNNEL
BASEMENT, 1500W	5	6	1400W, INSTR. TUNNEL
INSTR. TUNNEL, RECPT.	7	8	RECPT, BASEMENT
INSTR. TUNNEL, RECPT.	9	10	RECPT, BASEMENT
RAMP, 800W	11	12	RECPT, BASEMENT
EXIT LIGHTS, 100W	13	14	COMMUNICATION SYSTEMS RACK
SPARE	15	16	SPARE
SPARE	17	18	SPARE
SPARE	19	20	SPARE
SPARE	21	22	SPARE
SPARE	23	24	SPARE

LIGHTING PANEL "LI"
3Ø, 4W, 120/208V
SINGLE POLE 20A CB'S

KEY PLAN
NO SCALE

APPROVED FOR SAFETY
Lillard F. Hoge OCT 20 1962
SAFETY OFFICE DATE

AS BUILT

REV.	BY	DATE		C.I. NO.	APPROVED
1	TM	3-11-63	DELETED PART OF CABLE TRAYS C,D,E & F	55240-1	

NATIONAL AERONAUTICS AND SPACE ADMINISTRATION — M S F C, HUNTSVILLE, ALABAMA

VITRO ENGINEERING COMPANY A DIVISION OF VITRO CORPORATION OF AMERICA — NEW YORK

ADDITION TO BUILDING 4619-LOAD TEST ANNEX
ELECTRICAL
LIGHTING PLAN-BASEMENT & TUNNEL

NASA AE CONT. NO. NASA 8-2145 — FILE NO. MSFC 7443

SUBMITTED: CHIEF, DES. BRANCH		APPROVAL RECOMMENDED:	APPROVED: CHIEF, ENGINEERING BRANCH
A/E DATE: SEP. 14, 1962		LAB DATE: 10-23-62	NASA DATE: 10-25-62
DESIGNED G.S. DRAWN G.S. CHECKED RC		APPROVAL RECOMMENDED: CHIEF, DESIGN SECTION	DRWG. NO. FE-C-4619-E-13
SCALE: 1/4" = 1'-0"		DESIGN DATE: 10-24-62 SPEC. NO. FE-D-303	

MSFC MASTER BID DISK 11-18-2013

MSFC-FORM 232 (REV. DEC., 1960)

OSWEGO PRESS, INC., BROOKLYN 17, N.Y. STOCK NO. 440

SECTION 'A-A' ⚠1

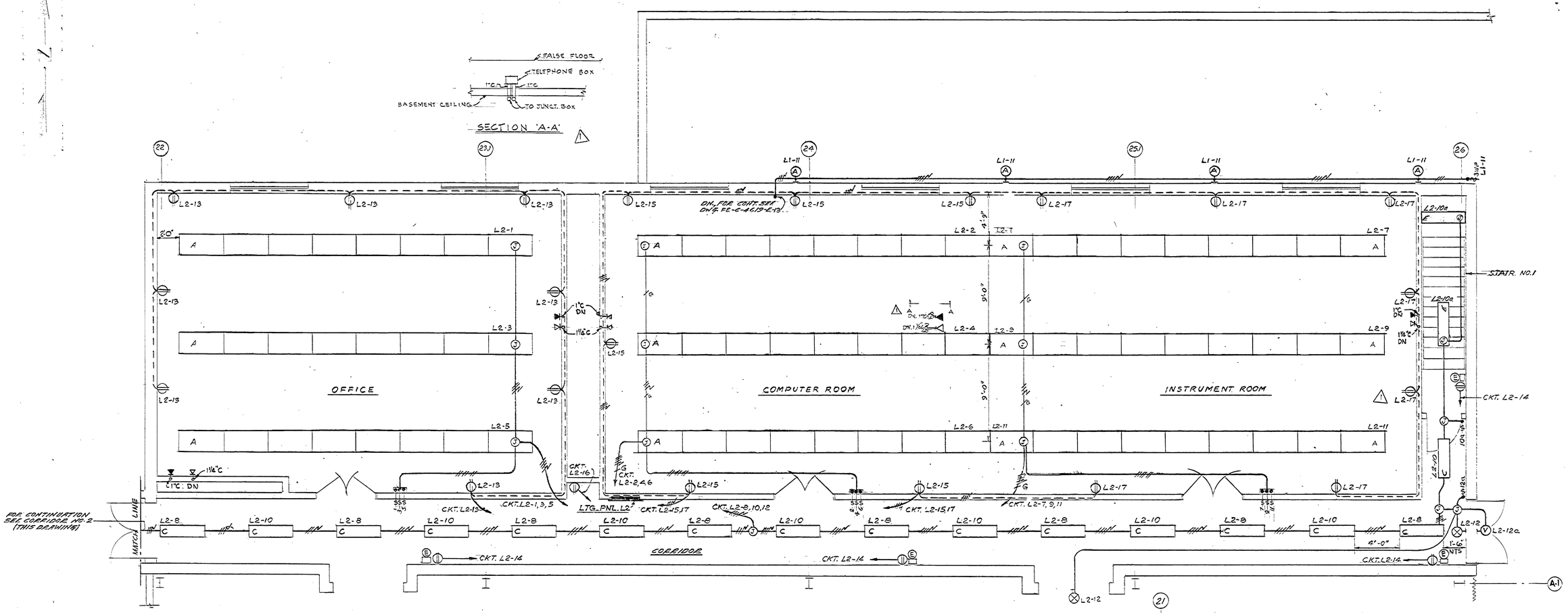

GROUND FLOOR PLAN

SCALE: 1/4"=1'-0"

▼SN

OFFICE 1600W	1	2	1600W COMPUTER RM.
OFFICE 1600W	3	4	1600W COMPUTER RM
OFFICE 1600W	5	6	1600W COMPUTER RM.
INSTRUMENT RM. 1800W	7	8	900W CORRIDOR
INSTRUMENT RM. 1800W	⚠1 9	10	1200W CORRIDOR & STAIRS
INSTRUMENT RM. 1800W	11	12	280W EXIT & OUTSIDE LIGHT
OFFICE RECP.	13	14	RECP. EMERG. BATTERY LIGHTS
COMPUTER RM. RECP.	15	16	RECP. WATER COOLER
INSTRUMENT RM. RECP.	17	18	SPARE
SPARE	19	20	SPARE
SPARE	21	22	SPARE

A B C

LIGHTING PANEL "L2"

3Φ, 4W, 120/208V

22 SINGLE POLE 20A CB'S

SYMBOLS

- A — FIXTURE FLUORESCENT FOR RECESSED INSTALLATION IN HUNG CEILING, WITH R.F. SHIELDED HOUSING & LENS. 24"X48" WITH 4X40W LAMPS, HIGH POWER FACTOR BALLASTS AND LINE SUPPRESSOR G.E.# 89G635, EC-70 CORNING LENS, ENDER-MONARCH CAT. NO. RF-2X40 OR EQUAL.
- C — FIXTURE FLUORESCENT 12"X48" FLANGED LOUVERED TROFFER WITH 2X40W LAMPS, HIGH POWER FACTOR BALLAST AND LINE SUPPRESSOR G.E.# 89G635. MILLER CAT. NO. RF-2105-04 OR EQUAL.
- E — FIXTURE FLUORESCENT 12"X48" WITH PORCELAIN ENAMELED REFLECTOR & 2X40W LAMPS, HIGH POWER FACTOR BALLAST AND LINE SUPPRESSOR G.E.#89G635. MILLER CAT.# 10-2100-04 OR EQUAL
- EXIT LIGHT INCANDESCENT SINGLE FACE SURFACE MOUNTED. DAY-BRITE CAT. No. 2516 OR EQUAL. WITH GREEN LETTERS & WHITE BACKGROUND.
- A — FIXTURE INCANDESCENT 200W. VAPORTIGHT BRACKET MOUNTED, WITH GLOBE & GUARD. CROUSE-HINDS CAT. No. VGR1239 OR EQUAL.
- RECEPTACLE - 15A, 125V. DUPLEX - 3WIRE, 3 POLE, HUBBELL CAT. No. 5262 OR EQUAL. MTG HIGH 18" ABOVE FINISHED FLOOR.
- J — JUNCTION BOX
- ——— CONDUIT RUN IN HUNG CEILING
- - - - CONDUIT RUN CONCEALED IN WALL

REFERENCE DRAWINGS

FE-C-4619-E-16 LIGHTING PLAN TEST AREA ELEVATION (81'-0"

NOTES:

1. ALL ELECTRICAL SWITCHES, RECEPTACLES, FIXTURES & LIGHTING PANEL SHALL BE FLUSH MOUNTED IN OFFICE, COMPUTER ROOM, INSTRUMENT ROOM & CORRIDOR. ALL WIRING IN THESE AREAS SHALL BE CONCEALED.
2. FOR ADDITIONAL SYMBOLS SEE DWG. FE-C-4619-E16

AS BUILT

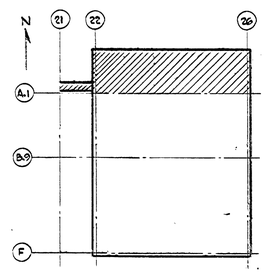

KEY PLAN NO SCALE

APPROVED FOR SAFETY
OCT 20 1962
DATE
CHIEF, SAFETY OFFICE

REV.	BY	DATE		C.I. NO.	APPROVED
⚠1	Quad	5-2-63	MOD. LIGHTING & ADDED 3 NEW FIXTURES, RELOCATED TELEPHONE & INTERCOM. BOXES	5540-3	

NATIONAL AERONAUTICS AND SPACE ADMINISTRATION — M S F C, HUNTSVILLE, ALABAMA

VITRO ENGINEERING COMPANY A DIVISION OF VITRO CORPORATION OF AMERICA NEW YORK

ADDITION TO BUILDING 4619-LOAD TEST ANNEX
ELECTRICAL
LIGHTING & COMMUNICATION PLAN - OFFICE, COMPUTER RM & INSTRUMENT RM.

NASA AE CONT. NO. NASA 8-2145 — FILE NO. MSFC 7444

SUBMITTED: [illegible] CHIEF, DES. BRCH. — APPROVAL RECOMMENDED: [illegible] LAB — APPROVED: [illegible] CHIEF, ENGINEERING BRANCH

AE: DATE: Sept. 14, 1962 — LAB DATE: 10-22-62 — NASA DATE: 10-25-62

DESIGNED G.S. DRAWN M.K. CHECKED RC — APPROVAL RECOMMENDED: [illegible] CHIEF, DESIGN SECTION — DESIGN DATE: 10-22-62 — SPEC. NO. FE-D-363

SCALE: 1/4" = 1'-0" — DRWG. NO. FE-C-4619-E-14

MSFC MASTER BID DISK 11-18-2013

MSFC-FORM 232 (REV. DEC., 1960)

GRAVURE PRESS, INC., BROOKLYN 17, N.Y. STOCK NO. 449

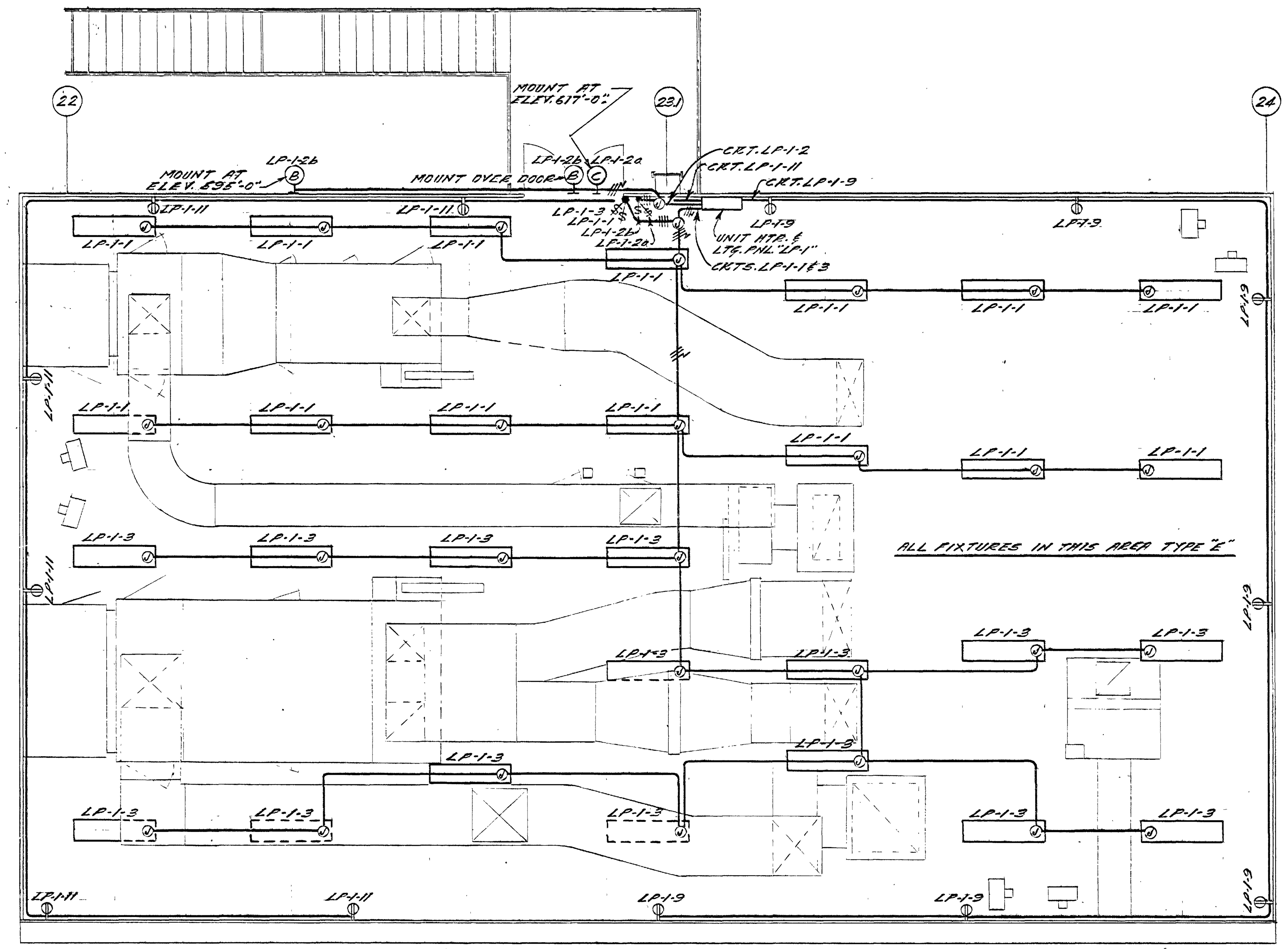

FAN ROOM PLAN
SCALE: 1/8"=1'-0"

SYMBOLS

Symbol	Description
(line)	RIGID CONDUIT EXPOSED.
(line with cross marks, N)	CROSS LINES INDICATE NUMBER OF #12 WIRES, N INDICATES NEUTRAL.
$	SWITCH, TOGGLE, SINGLE POLE 20A, 125V., HUBBELL CAT. #9805 OR EQUAL. MOUNT IN FS SERIES BOX 4'-0" ABOVE FLOOR.
(receptacle)	RECEPTACLE, 15A, 125V., DUPLEX 3 WIRE, 2 POLE, HUBBELL CAT. #5262 OR EQUAL. MOUNT IN FS SERIES BOX 12" ABOVE FLOOR.
(J)	JUNCTION BOX
E	FIXTURE, FLUORESCENT, 12"x48" WITH PORCELAIN ENAMELED REFLECTOR & 2x40W LAMPS. HIGH POWER FACTOR BALLAST AND LINE SUPPRESSOR. G.E. #89G635. MILLER CAT. # IC-2100-04 OR EQUAL.
(B)	FIXTURE, INCANDESCENT, 200W, WALL MOUNTED, HOLOPHANE CAT. # 420 OR EQUAL.
(C)	FIXTURE, INCANDESCENT, 200W, WEATHERPROOF, PENDENT, BENJAMIN CAT. # 7643-3/4 OR EQUAL.

NOTE:

1. UNLESS OTHERWISE NOTED ALL WIRING SHALL BE 2 #12 - 3/4" C.
2. FOR LIGHTING PANEL SCHEDULE SEE DWG FE-C-4619-E4
3. FIXTURE MOUNTING HEIGHT TO BE 10'-0". WHERE SHOWN UNDER DUCTS, FIXTURES TO BE MOUNTED AS HIGH AS POSSIBLE.

REFERENCE DRAWINGS

FE-C-4619-E4 CONDUIT AND GROUNDING PLAN - FAN ROOM
FE-C-4619-E10 MISCELLANEOUS SECTIONS AND DETAILS

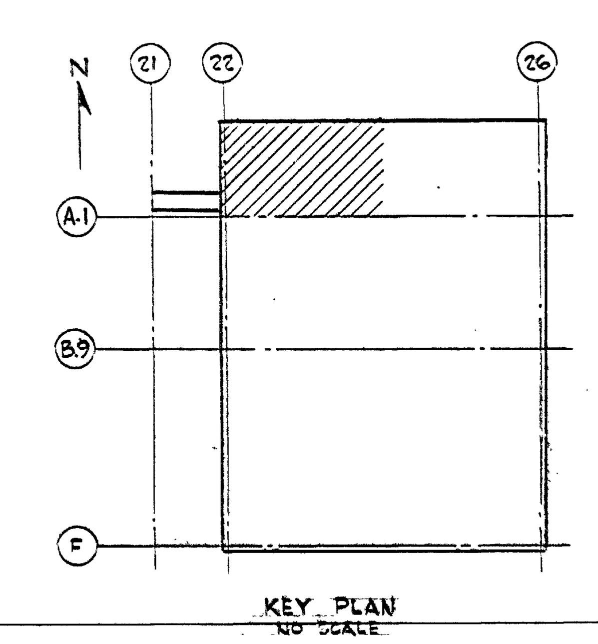

KEY PLAN
NO SCALE

APPROVED FOR SAFETY
[signature] OCT 20 1962
SAFETY OFFICE DATE

REV.	BY	DATE		C.I. NO.	APPROVED

NATIONAL AERONAUTICS AND SPACE ADMINISTRATION
MSFC HUNTSVILLE, ALABAMA

VITRO ENGINEERING COMPANY A DIVISION OF VITRO CORPORATION OF AMERICA NEW YORK

ADDITION TO BUILDING 4619 - LOAD TEST ANNEX
ELECTRICAL
LIGHTING PLAN - FAN LOFT

NASA AE CONT. NO. NASA 8-2145
FILE NO. MSFC 7445

SUBMITTED: [signature] CHIEF DES. ENGR. 9-13-62
AE: DATE: SEP. 14, 1962
APPROVAL RECOMMENDED: [signature] LAB. DATE: 10-22-62
APPROVED: [signature] CHIEF, ENGINEERING BRANCH NASA DATE: 10-25-62
DESIGNED G.S.
DRAWN G.S.
CHECKED [initials]
SCALE: 1/4"=1'-0"
APPROVAL RECOMMENDED: [signature] CHIEF, DESIGN SECTION
DESIGN DATE: 10-24-62
SPEC. NO. FE-D-303
DRWG. NO. FE-C-4619-E-15

MSFC MASTER BID DISK 11-18-2013

MSFC-FORM 232 (REV. DEC., 1960)

FORM No. 1000.807-0

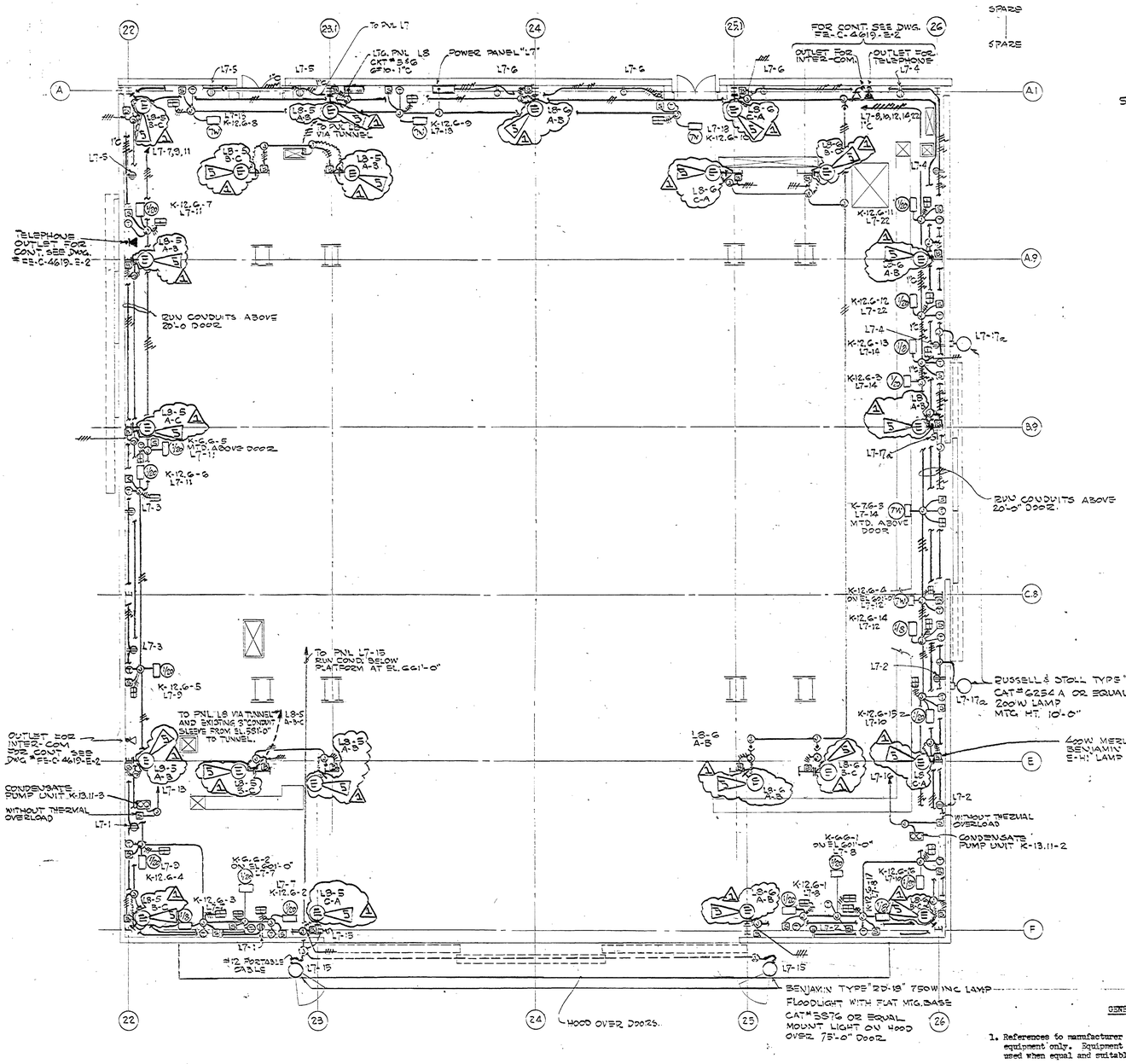

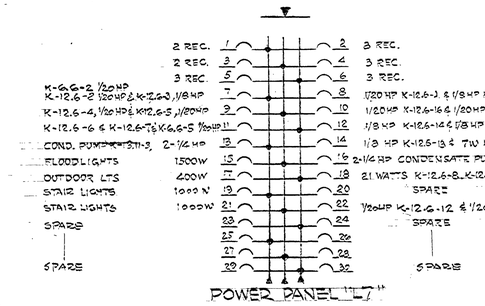

NOTES

1. ALL 400W MERCURY LIGHTS SHALL BE MTD 18'-0" ABOVE FLOOR

SYMBOLS

- (H) Fixture, incandescent, bracket mounted with globe and guard 100W., 125V. Crouse-Hinds Cat. #VGR116 or equal.
- (G) Fixture, incandescent 100W., 125V. RLM dome, Benjamin Cat. #5611
- Rigid Conduit Exposed
- Conduit Concealed
- #4/0 BARE COPPER GROUND
- #1/0 RHW, TC INSTRUMENTATION GROUND
- 1/4" x 1" Copper Bus for Instrumentation Ground
- Conduit home run to Panel L2 indicates Panel Number. 1,3 indicates circuit numbers
- Plug-in Bus Duct 400A- 480 volts, 3 phase, 3 wire, 60 ~ Sq. D. Cat. # SD 1343 or equal
- Plug-in Bus Duct, 400A- 120/208 Volts, 3 phase, 4 wire, 60 ~ . Sq. D Cat. # SD-1853 or equal.
- Plug-in Circuit Breaker, Chain operated:
  - Circuit Breaker for 480 volts - 70 amps - 3 pole Sq. D. Cat. #71370 or equal.
  - Circuit Breaker for 120/208 volts - 70 amps. - 3 phase, 4 wire Sq. D. Cat. #SD 75970 or equal.
- Cable Tap Box for plug-in Bus Duct. Sq. D. Cat. #SD 3345 or equal for 480 v bus and SD 3855 or equal for 120/208Y bus.
- Flanged End on plug-in Bus Duct. Sq. D Cat. #SD-1345-F3 or equal for 480 volt and 120/208 volt Bus Ducts
- Receptacle 60A 600V AC, 3 wire 4 pole. Crouse-Hinds Cat. ARSA 1064 S or equal (for use on 120/208Y)
- Receptacle 60A, 480V AC, 3 wire 4 pole. Crouse-Hinds Cat. ARSA 1063 S or equal (for use on 480V)
- Receptacle, 15A, 125V, duplex 3 wire, 2 pole, Hubbell Cat. #5262. Mount box 12" above floor.
- Receptacle 20A, 250V 1W, 4 pole. Hubbell Cat. #7410 or equal. Mount receptacle in FS series box.
- 2 position selector switch with 1 N.O. and 1 N.C. contacts with "summer" - "winter" nameplate. Allen Bradley Cat. #1N2A or equal. Mount switch in FS series box.
- (S) Manual motor starter for fractional horsepower motors. Single pole, 125V. with thermal overload unit, rated at 110% of motor nameplate rating. Allen Bradley Bulletin #600 or equal.
- (T) 6" x 6" x 4" Junction Box with 4- 50A terminal points.
- (C) 9" x 9" x 4" Junction Box with 16 point terminal block.
- (HS) Head Set (furnished by communication system contractor.)
- (T) Thermostat (furnished by heating and ventilating contractor.)
- (T) Temperature SW. (furnished by heating and ventilating contractor.)
- (ES) Electro pneumatic switch (furnished by heating and ventilating contractor.)
- (J) Junction Box
- (5) Motor with horsepower rating as noted.
- (E) Self charging battery emergency lighting unit with 24(25W)6v sealed beam lamps. Exide Lightguard Model "X" or equal.
- Combination magnetic starter. Line voltage type. 440V, 3 pole NEMA size 0. Sq. D. Cat. # 30-2 or equal.
- 3 pole 440V, 30A unfused disconnect switch. Sq. D. Cat. #A213h1 or equal.
- Switch, toggle, single pole 20A, 125v., Hubbell cat. #1905 or equal. Mount 4'-0" above floor.
- 3 Switch, toggle, three way, 20A, 125v., Hubbell Cat. #1903 or equal. Mount 4'-0" above floor.
- 3WP Switch, toggle, three way, 20A, 125v., Hubbell Cat. #1903 complete with Crouse-Hinds vapor-tight rocker arm cover Cat. #DS131 and neoprene gasket. 4'-0" above floor.
- (E) Fixture - Fluorescent 12" x 48" with porcelain enameled reflector and 2 x 40 W. lamps, high power factor ballast and line suppressor G.E. #39G635. Miller Cat. #1C-2100-OA or equal.
- (C) Fixture - incandescent 200W., weatherproof pendant, Benjamin Cat. #7643 or equal.
- (D) Fixture - incandescent 200W., weatherproof, symmetrical angle reflector. Benjamin Cat. #7546 or equal.
- (E) Fixture - Mercury 400W. color corrected mercury vapor lamp for bracket mounting medium spread beam, complete with ballast. Benjamin Cat. #5746 or equal.
- Crosslines indicate number of #12 wires indicates neutral.
- Outlet for telephone
- Outlet for inter-com
- NOA 3 position selector switch with "Hand-off-automatic" nameplate. Allen-Bradley Cat. #1838X-1 or equal. Mount switch in FS series box.
- TC Temperature controller (furnished by heating and ventilating contractor)
- —P— Portable cable-number of conductors as noted on drawing.
- Welding receptacle - 60A, 600V.A-C, 3 wire, 4-pole. Crouse-Hinds Cat. #AR648 or equal. (120/208Y)
- Welding receptacle - 100A, 440V., 3 wire, 4-pole. Russell-Stoll Cat. #8424 (440V.)
- FS Flow Switch -(furnished by Heating & ventilating Contractor)

AS BUILT

GENERAL NOTES

1. References to manufacturer are used to establish type of equipment only. Equipment by other manufacturers may be used when equal and suitable for the purpose.
2. All fluorescent lamp fixtures without a glass, plastic or louvered bottom shall be provided with safety lamp locks on all tubes.
3. All rapid start lamps shall be standard cool white.
4. 480V. lighting panel shall be Square D type NYB:all 120/208Y. panels shall be Square D type NAB. All DC panels shall be Square D type NQS. All panels shall be furnished with typed panel schedule.
5. REPLACE THE EXISTING 400W 480V MERCURY VAPOR LUMINAIRES WITH A 175W 480V METAL HALIDE FIXTURE G.E.# G258N325 OR EQ.

AS BUILT

Approved For Safety
SAFETY ENGR. DATE
SAFETY ENGR. DATE

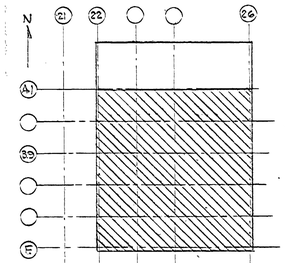

REV.	BY	DATE		C.I. NO.	APPROVED
A1	JBR	3/4/65	REPLACE HIGH BAY LIGHTING	7440	3-30-65

NATIONAL AERONAUTICS AND SPACE ADMINISTRATION — M S F C HUNTSVILLE, ALABAMA

VITRO ENGINEERING COMPANY A DIVISION OF VITRO CORPORATION OF AMERICA NEW YORK

ADDITION TO BLDG #4619 LOAD TEST ANNEX ELECTRICAL LIGHTING TEST AREA ELEV. 581'-0"

NASA AE CONT. NO. NASA 8-2145 — FILE NO. MSFC 7440

SUBMITTED: CHIEF ZPS ENGR.	APPROVAL RECOMMENDED:	APPROVED: CHIEF, ENGINEERING DIVISION
AE. DATE: SEP. 12, 1962	LAR DATE: 10-22-62	NASA DATE: 10-25-62
DESIGNED J.E. DRAWN S. SHUBERT CHECKED RC	APPROVAL RECOMMENDED: CHIEF, DESIGN SECTION	DRWG. NO. FE-C-4619-E16
SCALE: 1/8"=1'-0"	DESIGN DATE: 10-24-62 SPEC. NO. FE-D-303	

MSFC MASTER BID DISK 11-18-2013

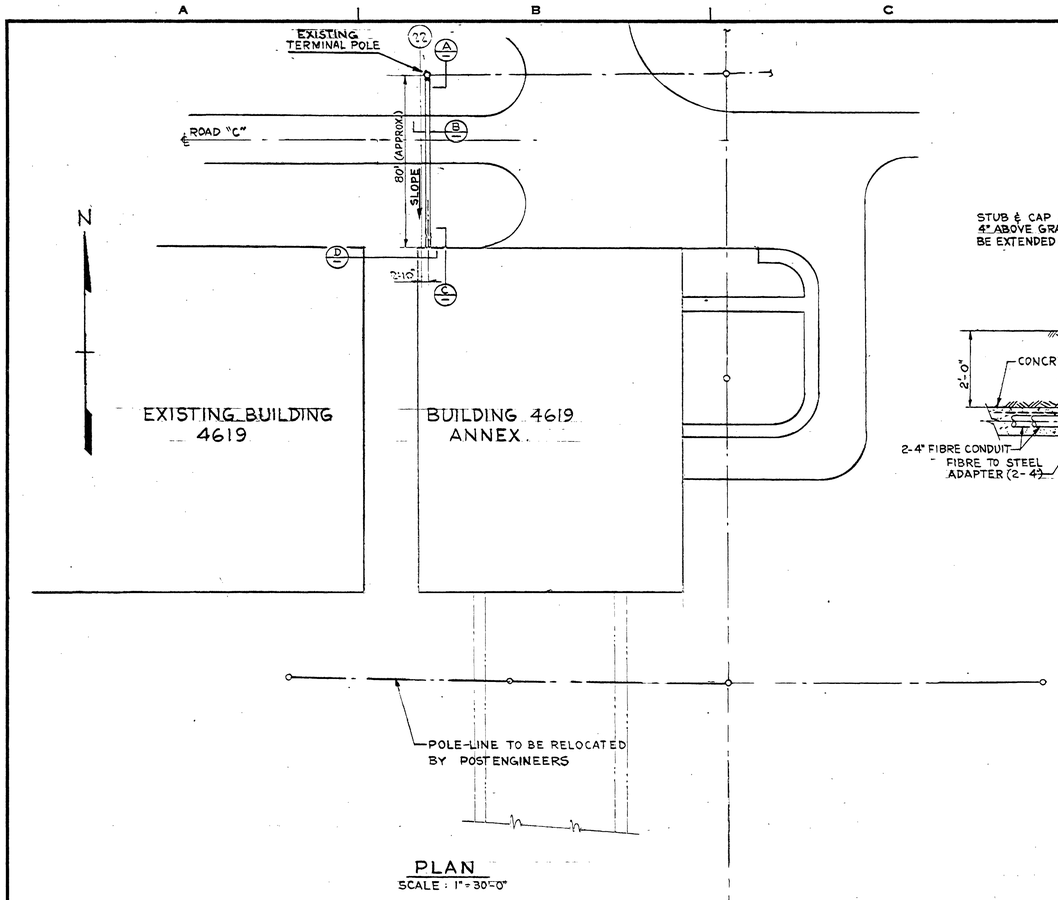

PLAN
SCALE : 1"=30'-0"

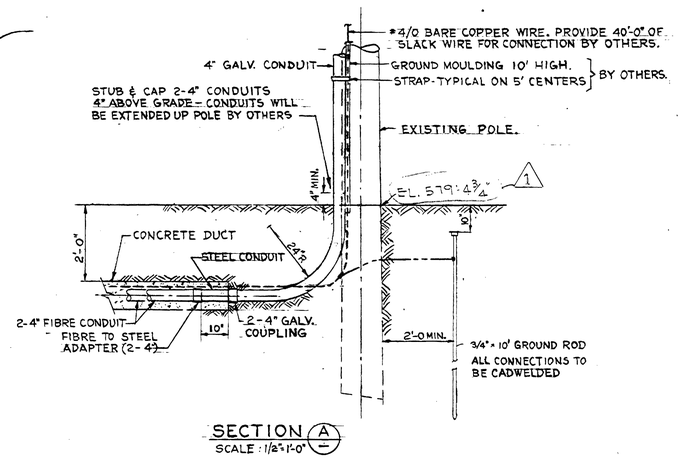

SECTION A
SCALE : 1/2"=1'-0"

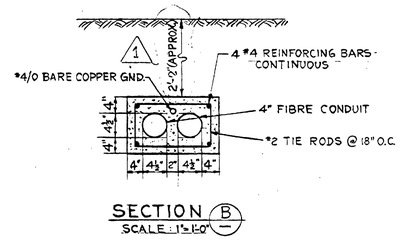

SECTION B
SCALE : 1"=1'-0"

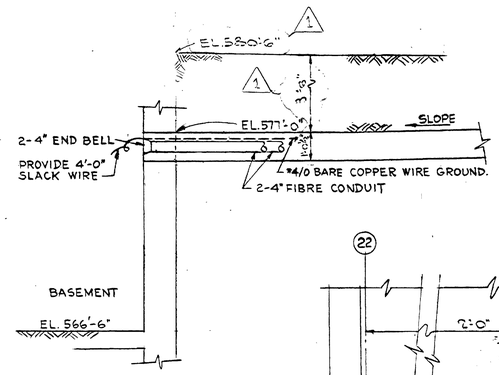

SECTION C
SCALE : 1/2"=1'-0"

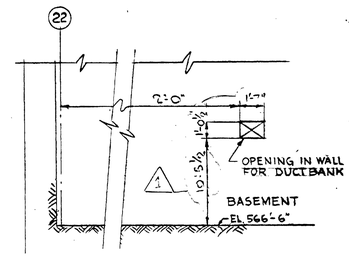

SECTION D
SCALE 1/4"=1'-0"

REV.	BY	DATE		C.I. NO.	APPROVED
1	WGS	7-19-62	CONDUITS RAISED & ELEVS. CHANGED		

NATIONAL AERONAUTICS AND SPACE ADMINISTRATION — M S F C, HUNTSVILLE, ALABAMA

VITRO ENGINEERING COMPANY A DIVISION OF VITRO CORPORATION OF AMERICA — NEW YORK

ADDITION TO BUILDING 4619 - LOAD TEST ANNEX
ELECTRICAL
PLOT PLAN & DETAILS
4160V POWER SUPPLY

NASA AE CONT. NO. 8-2145	FILE NO. M S F C 7447
SUBMITTED: H.L. Wagner 5-18-62	APPROVAL RECOMMENDED: V. v. Lowman
CHKD. DES. ENGR. 5-18-62	LAB. DATE: 6/11/62
AE DATE: MAY 18, 1962	APPROVAL RECOMMENDED: E. W. Emmitt
DESIGNED K. DRAWN LARSEN CHECKED J.D.	CHIEF, ELECTRICAL SECTION
SCALE: AS NOTED	DESIGN DATE: 6-6-62 SPEC. NO. 215
APPROVED FOR SAFETY — SAFETY OFFICE — JUN 7 1962 DATE	CHIEF, DESIGN BRANCH: W. W. Hudson; NASA DATE: 6/11/62
	DRWG. NO. FE-C-4619-E-17

MSFC MASTER BID DISK 11-18-2013

MSFC-FORM 232 (REV. DEC., 1960)

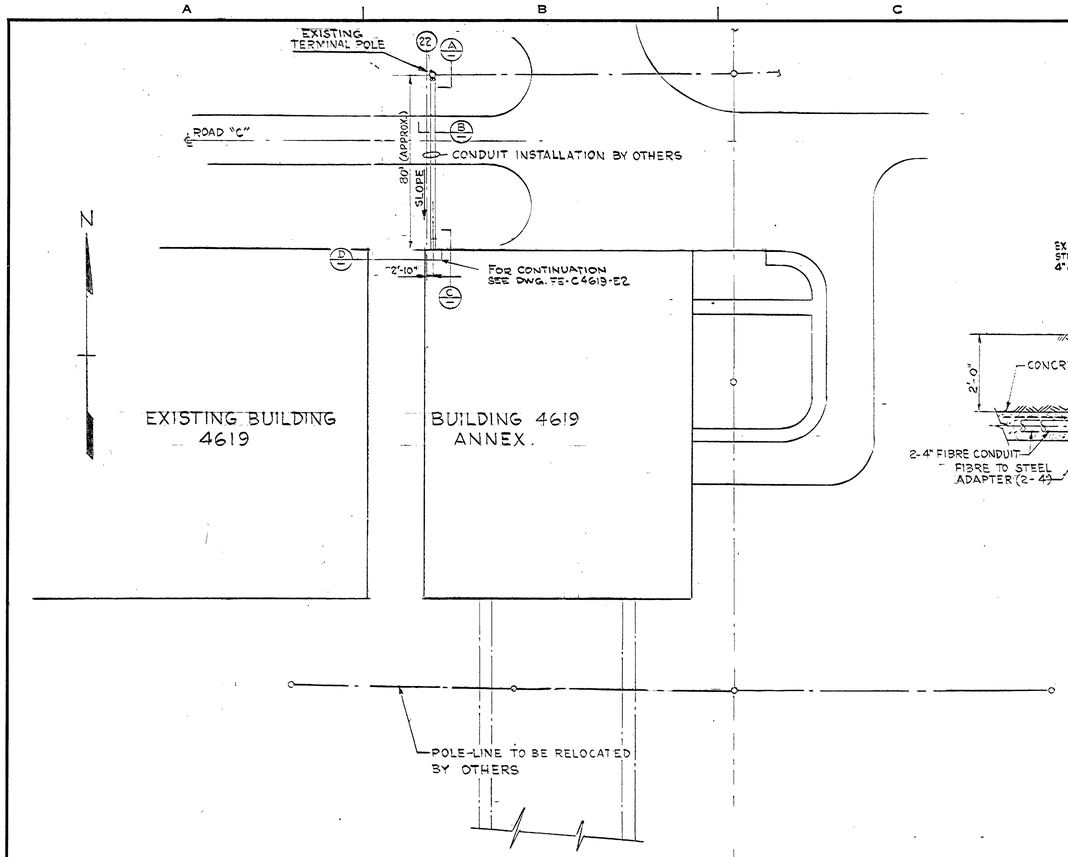

PLAN
SCALE : 1"=30'-0"

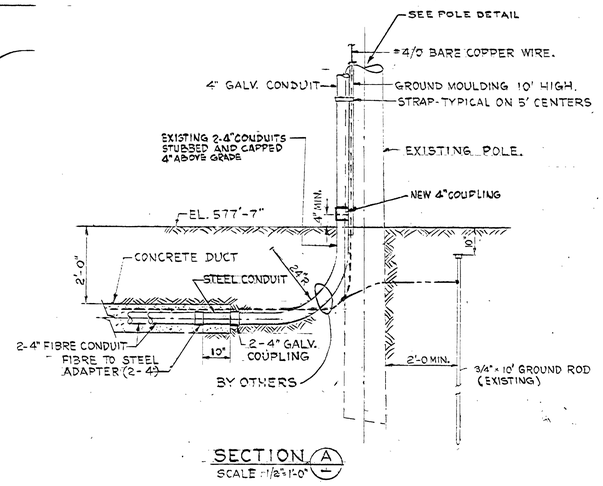

SECTION A
SCALE: 1/2"=1'-0"

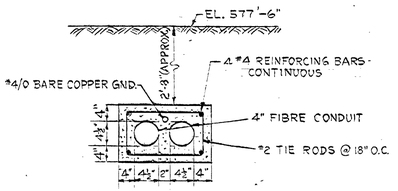

SECTION B
SCALE: 1"=1'-0"

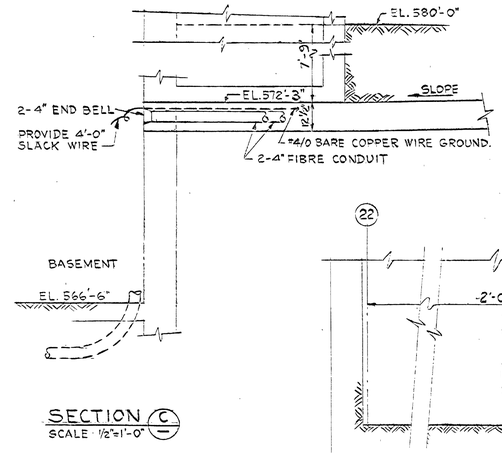

SECTION C
SCALE: 1/2"=1'-0"

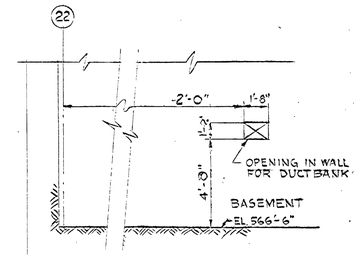

SECTION D
SCALE 1/4"=1'-0"

FOR INFORMATION ONLY

BY OTHERS

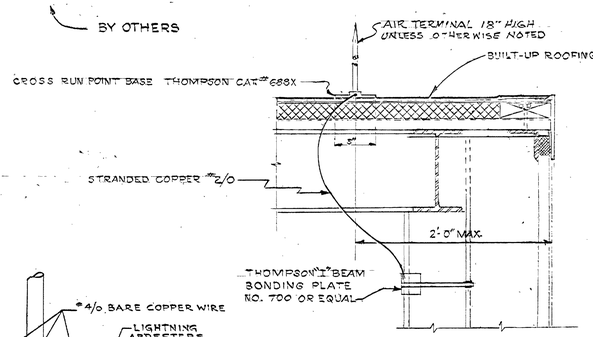

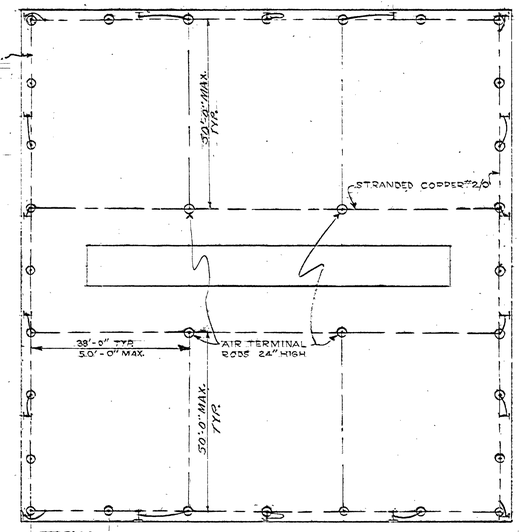

ROOF PLAN - LIGHTNING PROTECTION SYSTEM
SCALE 1/16"=1'-0"

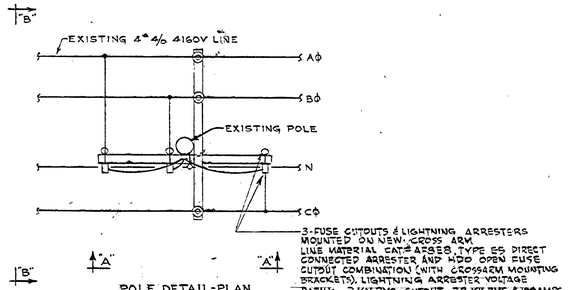

POLE DETAIL-PLAN
SCALE: NONE

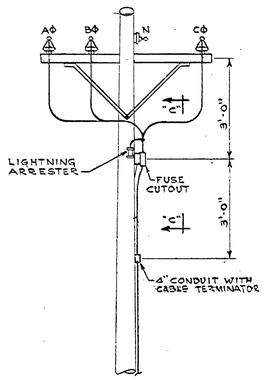

ELEVATION "B-B"
SCALE: NONE

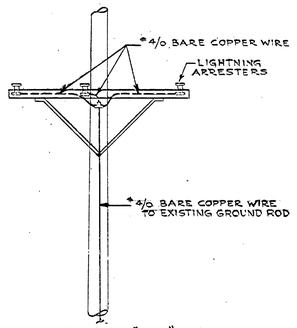

ELEVATION "C-C"
SCALE: NONE

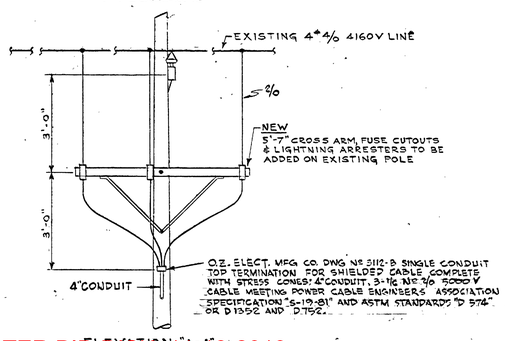

ELEVATION "A-A"
SCALE: NONE

REFERENCE DRAWINGS

FE-C 4619-E1 – ELECTRICAL ONE LINE DIAGRAM
FE-C 4619-E2 – CONDUIT & GROUNDING BASEMENT-PLAN- SECT'S & DET'S.

AS BUILT

REV.	BY	DATE		C.I. NO.	APPROVED
3	WRS	6-17-63	ADDED LIGHTNING PROTECTION SYSTEM	5760-5	EO
2	WRS	11-1-62	RE-ISSUED FOR PHASE 'B'		Amd.

NATIONAL AERONAUTICS AND SPACE ADMINISTRATION — M S F C HUNTSVILLE, ALABAMA

VITRO ENGINEERING COMPANY A DIVISION OF VITRO CORPORATION OF AMERICA NEW YORK

ADDITION TO BUILDING 4619 - LOAD TEST ANNEX
ELECTRICAL
PLOT PLAN & DETAILS
4160V POWER SUPPLY

NASA AE CONT. NO. NASA 8-2145 — FILE NO. M S F C 7447

SUBMITTED	APPROVAL RECOMMENDED:	APPROVED:	
CHIEF, ENGINEERING BRANCH		CHIEF, ENGINEERING BRANCH	
AE: DATE: MAY 13, 1962	LAB: DATE:	NASA: DATE:	
DESIGNED	APPROVAL RECOMMENDED:	DRWG. NO.	
DRAWN LARSEN	CHIEF, DESIGN SECTION		
CHECKED	DESIGN DATE:	FE-C-4619-E-171	
SCALE AS NOTED	SPEC. NO. FE-D-303		

APPROVED FOR SAFETY
OCT 20 1962
DATE
SAFETY OFFICE

MSFC MASTER BID DISK 11-18-2013

GIESLER PRESS, INC., BROOKLYN 17, N.Y. STOCK NO. 440

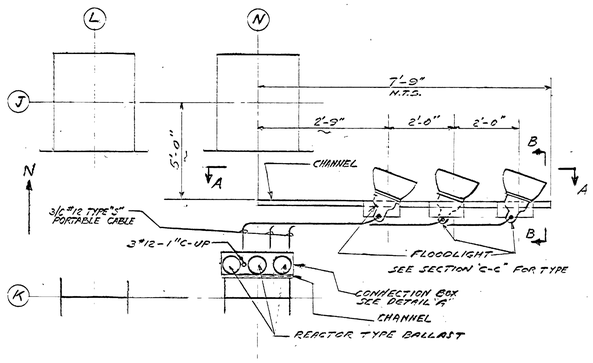

FLOODLIGHT INSTALLATION PLAN
SOUTH WEST TOWER
TYPICAL FOR ALL TOWERS
SCALE: 1/2"=1'-0"

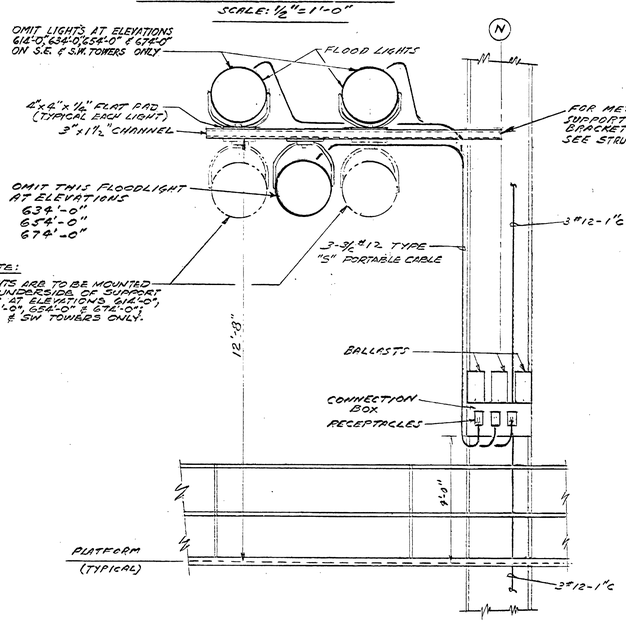

Note:
LIGHTS ARE TO BE MOUNTED ON UNDERSIDE OF SUPPORT ARM AT ELEVATIONS 614'-0", 634'-0", 654'-0" & 674'-0"; SE & SW TOWERS ONLY.

SECTION "A-A"
SCALE: 1/2"=1'-0"

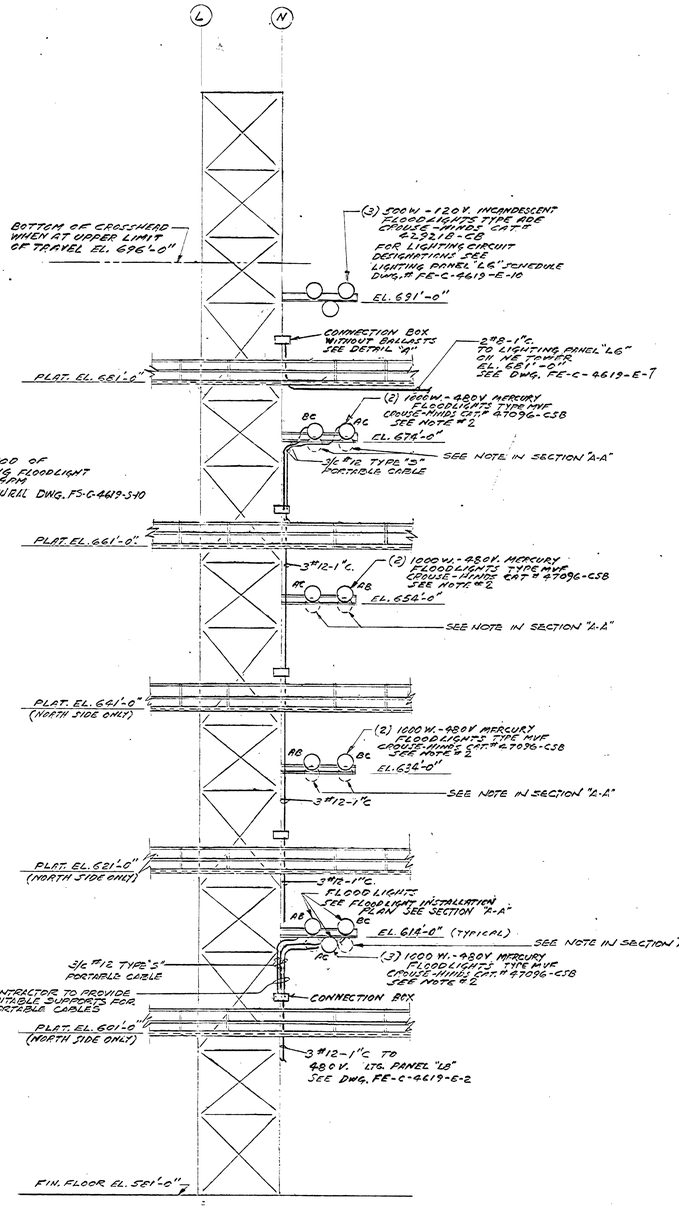

SECTION C-C
SEE KEY PLAN
SCALE: 1/8"=1'-0"
TYPICAL FOR NW & SE TOWERS
OPPOSITE HAND FOR NE & SW TOWERS

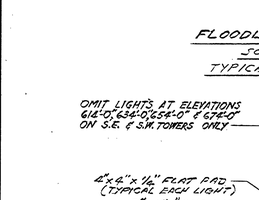

SECTION "B-B"
NO SCALE

NOTE "A"
BALLASTS NOT REQUIRED FOR INCANDESCENT FLOODLIGHTS AT EL. 691'-0"
OMIT ONE BALLAST & ONE RECEPTACLE FOR LIGHTS AT ELEVATIONS 634'-0", 654'-0" & 674'-0"

DETAIL "A"
NO SCALE

CONNECTION BOX (SEE NOTE "A")
24" x 12" x 8" DEEP
#10 GAUGE SHEET STEEL - GALVANIZED WITH SCREW-ON COVER & NEOPRENE GASKET

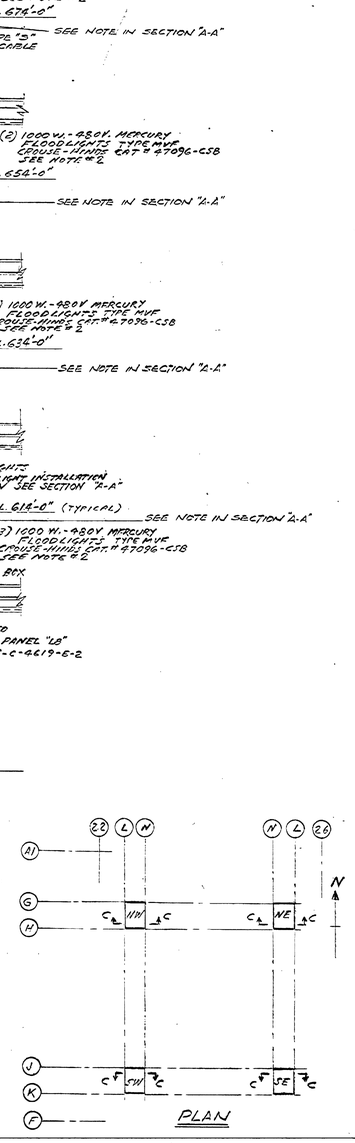

PLAN

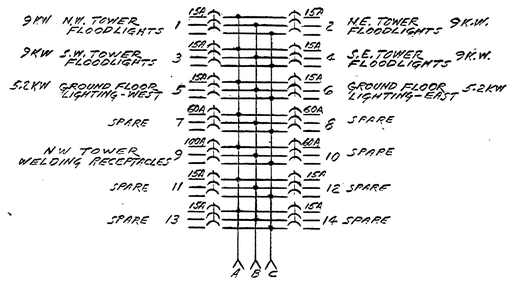

SCHEDULE
LIGHTING PANEL L8
480 V - 3φ - 3W

NOTES:
1. FOR GENERAL NOTES & SYMBOLS SEE DWG. FE-C-4619-E-16
2. ○LC-DENOTES PHASES TO WHICH 480V-1000W. MERCURY FLOODLIGHTS ARE CONNECTED.

REFERENCE DRAWINGS:

FE-C-4619-E2	CONDUIT AND GROUNDING BASEMENT PLAN AND SECTIONS
FE-C-4619-E7	CONDUIT, GROUNDING & LIGHTING TEST AREA ELEV. 661'-0" & 681'-0"
FE-C-4619-E10	MISCELLANEOUS SECTIONS AND DETAILS

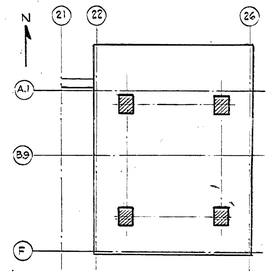

KEY PLAN
NO SCALE

APPROVED FOR SAFETY
Joseph Moore OCT 2 1962
GEN. ENGR. SAFETY OFFICE
DATE

AS BUILT

REV.	BY	DATE	C.I. NO.	APPROVED

NATIONAL AERONAUTICS AND SPACE ADMINISTRATION — M S F C HUNTSVILLE, ALABAMA

VITRO ENGINEERING COMPANY A DIVISION OF VITRO CORPORATION OF AMERICA NEW YORK

ADDITION TO BLDG. 4619-LOAD TEST ANNEX
ELECTRICAL
LIGHTING - TOWER FLOOD LIGHTING

NASA AE CONT. NO. NASA 8-2145 — FILE NO. M S F C 7448

SUBMITTED:	APPROVAL RECOMMENDED:	APPROVED:
CHIEF, E.E.S., E.N.I.S.		CHIEF, ENGINEERING BRANCH
AE: DATE: SEP. 14, 1962	LAB: DATE: 11-23-62	NASA: DATE: NOV 23 62
DESIGNED: N.S.	APPROVAL RECOMMENDED:	DRWG. NO.
DRAWN: N.S.	CHIEF, DESIGN SECTION	
CHECKED: RC	DESIGN DATE: 10-24-62	FE-C-4619-E-18
SCALE: AS SHOWN	SPEC. NO. FE-10-303	

MSFC MASTER BID DISK 11-18-2013

DIETZGEN PRINT, INC., BROOKLYN 17, N.Y. STOCK NO. 449

DOCUMENT INPUT RECORD - MSFC DOCUMENTATION REPOSITORY

I. GENERAL INFORMATION

1. APPROVED PROJECT:	2. DOCUMENT/ DRAWING NUMBER:	3. CONTROL NUMBER:	4. RELEASE DATE:	5. SUBMITTAL DATE:
Facilities	FE-C-4619		08/27/1964	08/22/2006

6. DOCUMENT/DRAWING TITLE:
ADDITION TO BUILDING 4619 - LOAD TEST ANNEX

7. REPORT TYPE:

8. CONTRACT NUMBER / PERFORMING ACTIVITY:	9. DRD NUMBER:	10. DPD / DRL / IDRD NUMBER:
NNM05AB09C		

11. DISPOSITION AUTHORITY (Check One):	12. SUBMITTAL AUTHORITY:	13. RELEASING AUTHORITY:
☐ Official Record - NRRS _____ ☒ Reference Copy - NRRS 8/5/A/3 (destroy when no longer needed)	KAREN FRANCIS / SEI AS22	

14. SPECIAL INSTRUCTIONS:

15. CONTRACTOR/SUBMITTING ORGANIZATION, ADDRESS AND PHONE NUMBER:	16. ORIGINATING NASA CENTER:
KAREN FRANCISSEI GROUP / AS22 BUILDING 4241, ROOM116 MSFC, AL 35/12 (256)-544-7942	17. OFFICE OF PRIMARY RESPONSIBILITY:

18. PROJECT CODE:	02400	19. NUMBER OF PAGES:	77

II. ENGINEERING DRAWINGS

20. REVISION:	21. ENGINEERING ORDER:	22. PARTS LIST:	23. CCBD:
0,1,2,3,4,5,6			

III. REPORTS, SPECIFICATIONS, ETC.

24. REVISION:	25. CHANGE:	26. VOLUME:	27. BOOK:	28. PART:	29. SECTION:

30. ISSUE:	31. ANNEX:	32. SCN:	33. DCN:	34. AMENDMENT:

35. APPENDIX:	36. ADDENDUM:	37. CCBD:	38. CODE ID:	39. IRN:

IV. EXPORT AND DISTRIBUTION RESTRICTIONS

☐ Privacy Act (see MWI 1382.1)
☐ Proprietary (see MPD 2210.1, MPR 7120.3)
☐ Patent (see MPR 2220.1)
☐ ITAR (see MPR 2220.1, MPD 2190.1)
☐ EAR (see MPR 2220.1, MPD 2190.1)
☐ Other ACI (see NPR 1600.1, MPR 1600.1) _____
☒ No statutory or institutional restrictions applicable -- material may be electronically distributed to user in the NASA domain

V. DOCUMENTATION SUBMITTER (NASA OR CONTRACTOR)

40. ORG. CODE:	41. PHONE NUMBER:	42. NAME:	43. SIGNATURE/DATE:
SEI (AS22)	(256) 544-7942	KAREN FRANCIS	08/22/06 Karen Francis

VI. TO BE COMPLETED BY MSFC DOCUMENTATION REPOSITORY

44. RECEIVED BY:	45. DATE RECEIVED:	46. WORK ORDER:
Kim Mills	08-22-06	03-013086

MSFC MASTER BID DISK 11-18-2013

NOTICE — WHEN GOVERNMENT DRAWINGS, SPECIFICATIONS, OR OTHER DATA ARE USED FOR ANY PURPOSE OTHER THAN IN CONNECTION WITH A DEFINITELY RELATED GOVERNMENT PROCUREMENT OPERATION, THE UNITED STATES GOVERNMENT THEREBY INCURS NO RESPONSIBILITY NOR ANY OBLIGATION WHATSOEVER; AND THE FACT THAT THE GOVERNMENT MAY HAVE FORMULATED, FURNISHED, OR IN ANY WAY SUPPLIED THE SAID DRAWINGS, SPECIFICATIONS OR OTHER DATA IS NOT TO BE REGARDED BY IMPLICATION OR OTHERWISE AS IN ANY MANNER LICENSING THE HOLDER OR ANY OTHER PERSON OR CORPORATION, OR CONVEYING ANY RIGHTS OR PERMISSION TO MANUFACTURE, USE OR SELL ANY PATENTED INVENTION THAT MAY IN ANY WAY BE RELATED THERETO.

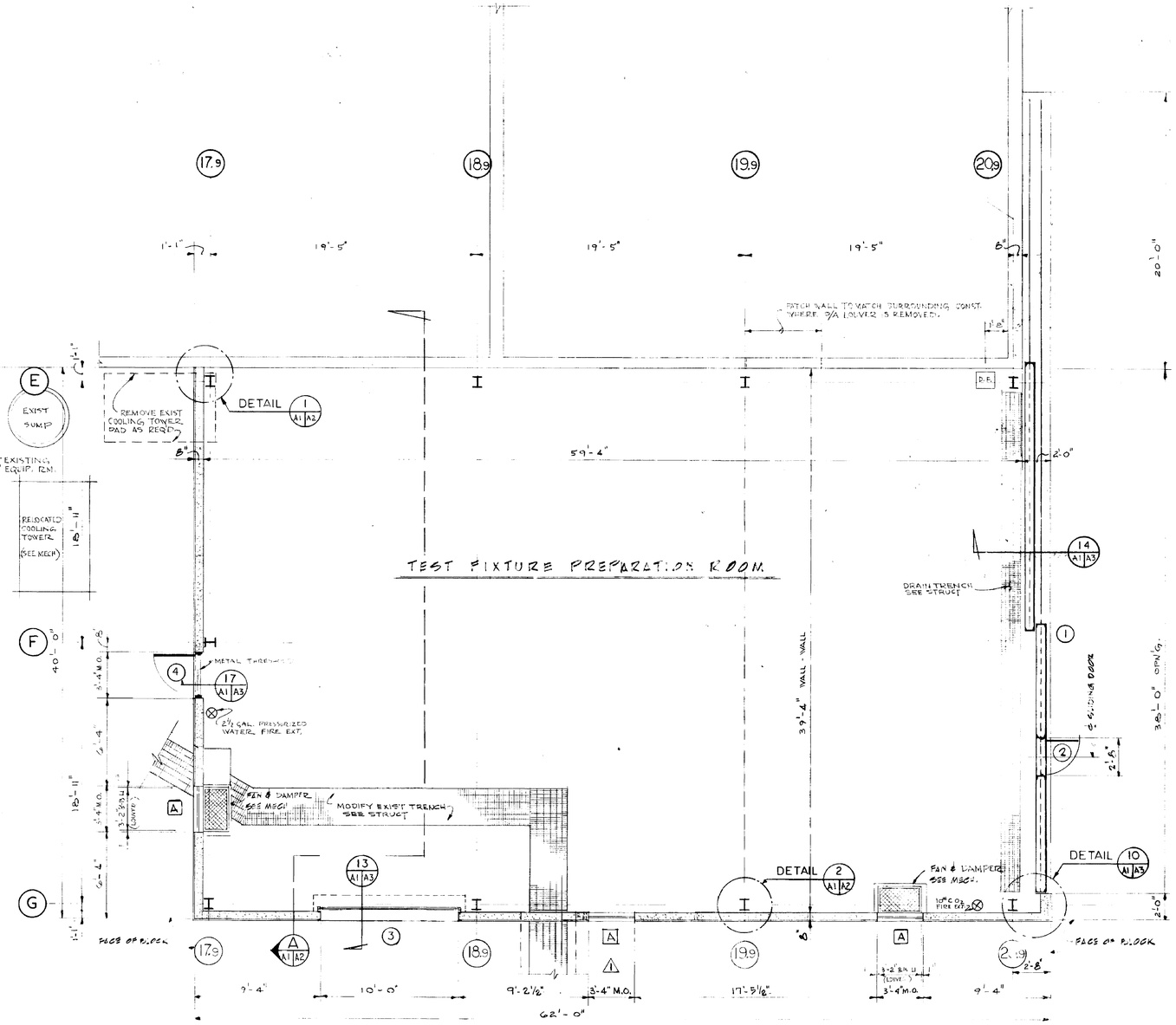

FLOOR PLAN

SCALE : ⅛" = 1'-0"

N

DOOR SCHEDULE

DOOR MARK	TYPE	DOOR OPNG WIDTH	DOOR OPNG HGT	DOOR THICK.	DOOR MAT'L	OPNG DETAIL H	OPNG DETAIL J	OPNG DETAIL S	FRAME MAT'L	THRESH.	GLASS	HDW SET NO.	REMARKS
①	SEE ELEV.	38'-0	20'-0"	8"	STEEL	B	9	10, 14	STEEL	—	PLEXIGLAS OR EQUAL	—	SLIDING DOORS
②	SEE ELEV.	2'-6	6'-0"	1¾"	STEEL				STEEL	—	WIRE GL.	HW-1	PASS DOOR
③	SEE ELEV.	10'-0	8'-0"		STEEL	11	12	13	STEEL	—	—	—	ROLL-UP DOOR
④	SEE ELEV.	3'-0"	7'-0	1¾"	STEEL	15	16	17	STEEL	ALUM	WIRE GL.	HW-2	

LEGEND

EXISTING CONSTRUCTION

NEW CONSTRUCTION

DETAIL NUMBER / LOCATION SHEET / DETAIL SHEET — DETAIL SYMBOL

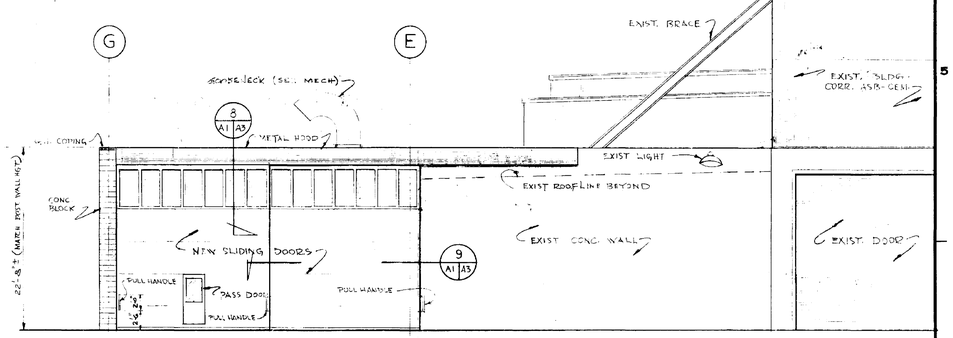

EAST ELEVATION

SCALE : ⅛" = 1'-0"

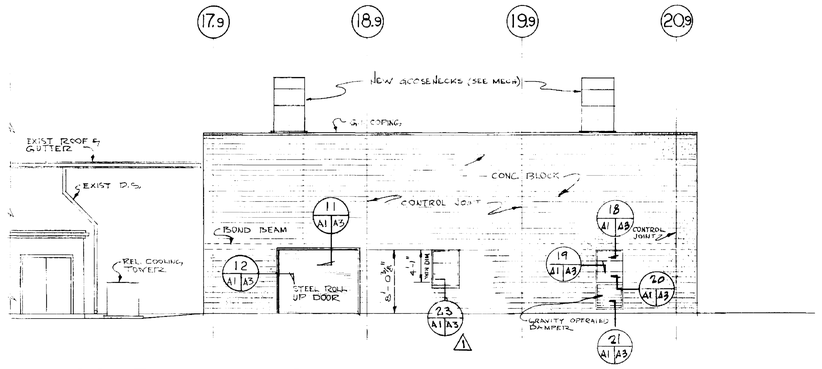

SOUTH ELEVATION

SCALE : ⅛" = 1'-0"

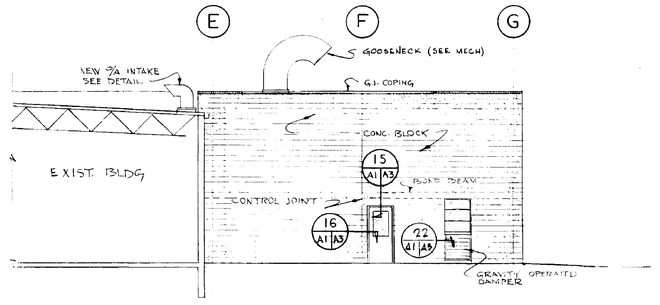

WEST ELEVATION

SCALE : ⅛" = 1'-0"

REV.	BY	DATE		C.I. NO.	APPROVED
1	JBH	8/11/64	CHANGED WINDOW LOCATION, TO AS BUILT		

NATIONAL AERONAUTICS AND SPACE ADMINISTRATION — M S F C — HUNTSVILLE, ALABAMA

FACILITIES AND DESIGN OFFICE

BUILDING 4619
TEST FIXTURE PREPARATION ROOM
ARCHITECTURAL
FLOOR PLAN, SCHEDULES, & ELEVATIONS

BLDG. 4619

WORK SITE

KEY PLAN

N

PROJECT NO. 64-18	SUBMITTED: CHIEF CONTRACT DESIGN SECTION	FILE NO. M S F C 2933
SUBMITTED: RES. PROJECT ENGINEER	APPROVAL RECOMMENDED:	APPROVED: CHIEF DESIGN BRANCH
A.E. DATE: 3-6-64	LAB. DATE: -	NASA DATE: 3-30-64
DESIGNED C.M. YARBOROUGH DRAWN E.W.B. 1-12-64 CHECKED -	APPROVAL RECOMMENDED: CHIEF ARCHITECTURAL SECTION DESIGN DATE: 3-7-64	DRWG. NO. F&D-B-4619-A1
SCALE: AS NOTED	SPEC. NO. F 10-44	

REVIEWED FOR SAFETY MAR 26 1964

A1

MSFC-FORM 232 (REV. APRIL 1962)

4619

MSFC MASTER BID DISK 11-18-2013

NOTICE: — WHEN GOVERNMENT DRAWINGS, SPECIFICATIONS, OR OTHER DATA ARE USED FOR ANY PURPOSE OTHER THAN IN CONNECTION WITH A DEFINITELY RELATED GOVERNMENT PROCUREMENT OPERATION, THE UNITED STATES GOVERNMENT THEREBY INCURS NO RESPONSIBILITY NOR ANY OBLIGATION WHATSOEVER; AND THE FACT THAT THE GOVERNMENT MAY HAVE FORMULATED, FURNISHED, OR IN ANY WAY SUPPLIED THE SAID DRAWINGS, SPECIFICATIONS, OR OTHER DATA IS NOT TO BE REGARDED BY IMPLICATION OR OTHERWISE AS IN ANY MANNER LICENSING THE HOLDER OR ANY OTHER PERSON OR CORPORATION, OR CONVEYING ANY RIGHTS OR PERMISSION TO MANUFACTURE, USE, OR SELL ANY PATENTED INVENTION THAT MAY IN ANY WAY BE RELATED THERETO.

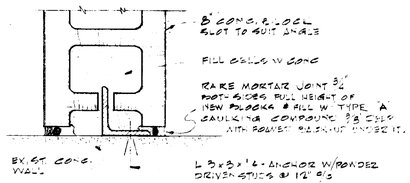

CONTROL JOINT DETAIL 1 A1|A2

SCALE: 3"=1'-0"

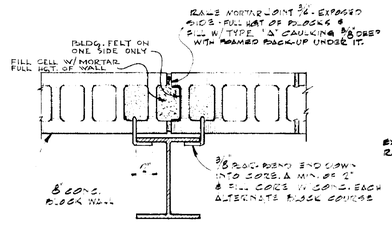

CONTROL JOINT DETAIL 2 A1|A2

SCALE: 1 1/2"=1'-0"

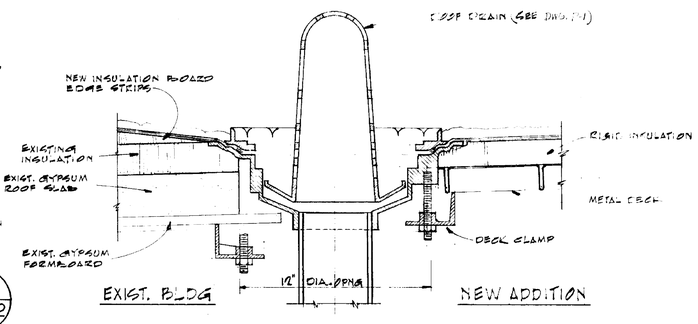

ROOF DRAIN DETAIL 3 A2|A2

SCALE: 3"=1'-0"

SHOWING INSTALLATION IN EXISTING BLDG 4619 AND IN TEST FIXTURE PREPARATION ROOM

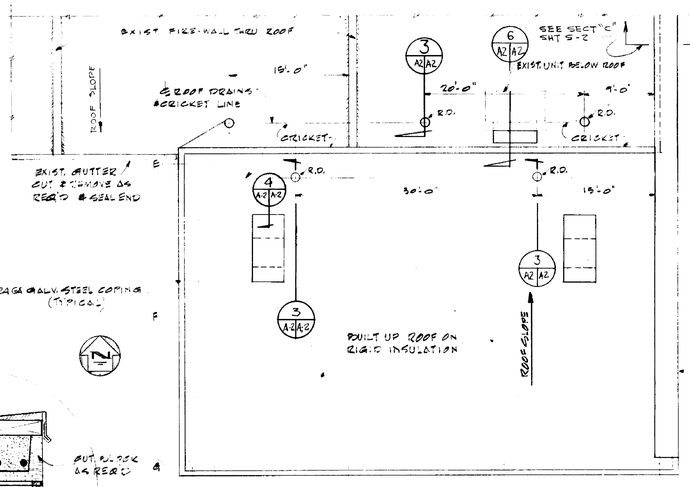

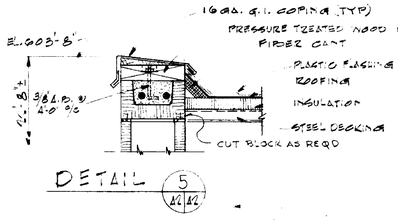

DETAIL 5 A1|A2

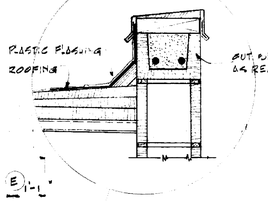

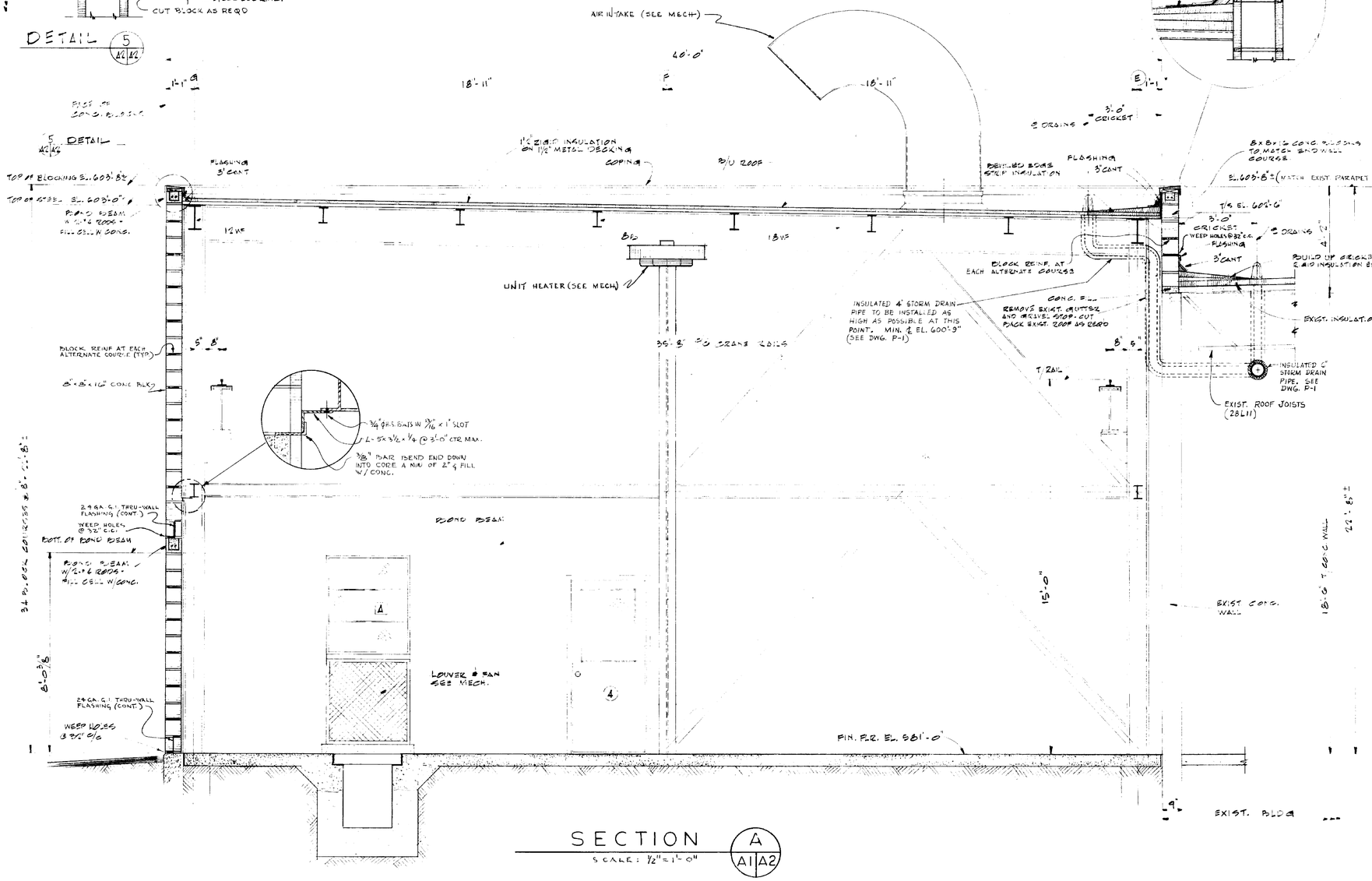

SECTION A A1|A2

SCALE: 1/2"=1'-0"

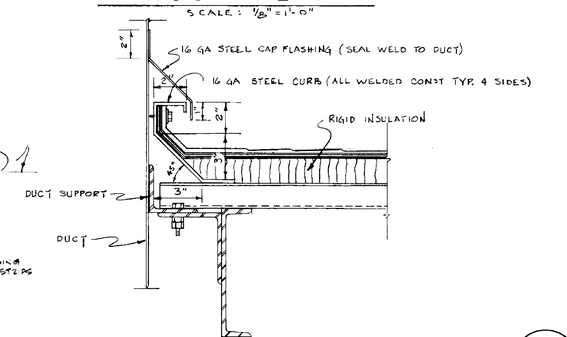

ROOF OPENING DETAIL 4 A2|A2

SCALE: 3"=1'-0"

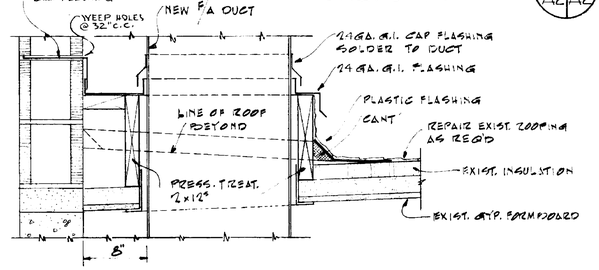

DETAIL 6 A2|A2

SCALE: 1 1/2"=1'-0"

REV.	BY	DATE		C. I. NO.	APPROVED

NATIONAL AERONAUTICS AND SPACE ADMINISTRATION — M S F C — HUNTSVILLE, ALABAMA

FACILITIES AND DESIGN OFFICE

BUILDING 4619
TEST FIXTURE PREPARATION ROOM
ARCHITECTURAL
ROOF PLAN, CROSS-SECTION, & DETAILS

PROJECT NO. 64-18	SUBMITTED: CHIEF CONTRACT DESIGN SECTION		FILE NO. MSFC 2934
SUBMITTED: RES. PROJECT ENGINEER	APPROVAL RECOMMENDED:		APPROVED: CHIEF DESIGN BRANCH
AE. DATE: 3-5-64	LAB. DATE:		NASA DATE: 3-30-64
DESIGNED C.M. YARBOROUGH DRAWN V.G. ROSSANT CHECKED YARBOROUGH	APPROVAL RECOMMENDED: CHIEF ARCHITECTURAL SECTION DESIGN DATE: 3-9-64		DRWG. NO. F&D-B-4619-A2
SCALE: AS NOTED	SPEC. NO. F.D.-444		

RELEASED FOR BID MAR 25 1964 — A2

MSFC-FORM 232 (REV. APRIL 1962)

4619

MSFC MASTER BID DISK 11-18-2013

NOTICE — WHEN GOVERNMENT DRAWINGS, SPECIFICATIONS, OR OTHER DATA ARE USED FOR ANY PURPOSE OTHER THAN IN CONNECTION WITH A DEFINITELY RELATED GOVERNMENT PROCUREMENT OPERATION, THE UNITED STATES GOVERNMENT THEREBY INCURS NO RESPONSIBILITY NOR ANY OBLIGATION WHATSOEVER; AND THE FACT THAT THE GOVERNMENT MAY HAVE FORMULATED, FURNISHED, OR IN ANY WAY SUPPLIED THE SAID DRAWINGS, SPECIFICATIONS, OR OTHER DATA IS NOT TO BE REGARDED BY IMPLICATION OR OTHERWISE AS IN ANY MANNER LICENSING THE HOLDER OR ANY OTHER PERSON OR CORPORATION, OR CONVEYING ANY RIGHTS OR PERMISSION TO MANUFACTURE, USE, OR SELL ANY PATENTED INVENTION THAT MAY IN ANY WAY BE RELATED THERETO.

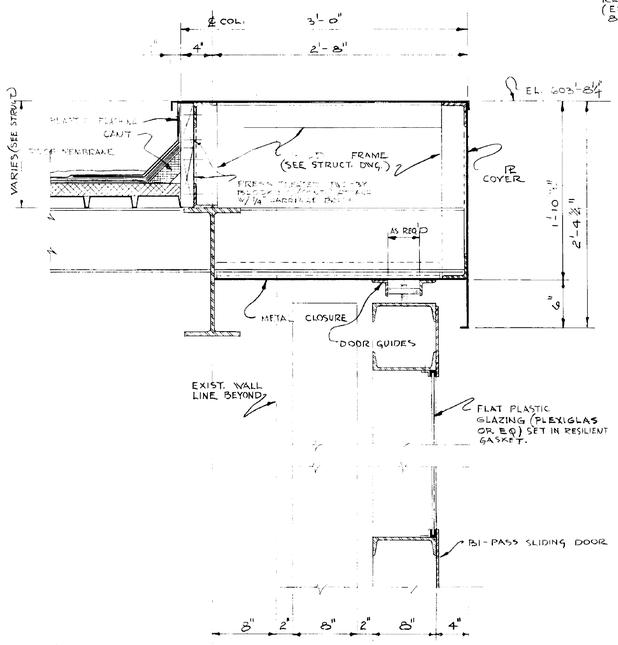

HEAD DETAIL 8
SCALE: 1½" = 1'-0"

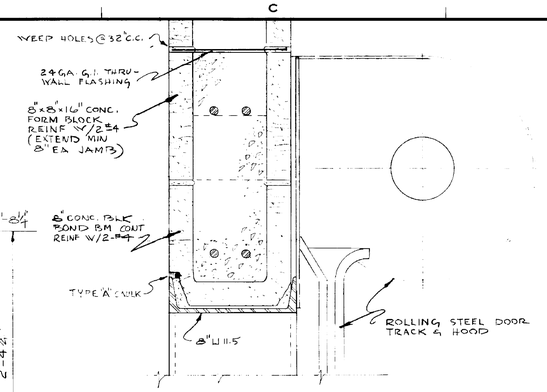

HEAD DETAIL 11
SCALE: 3" = 1'-0"

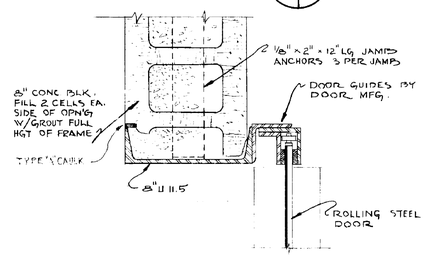

JAMB DETAIL 12
SCALE: 3" = 1'-0"

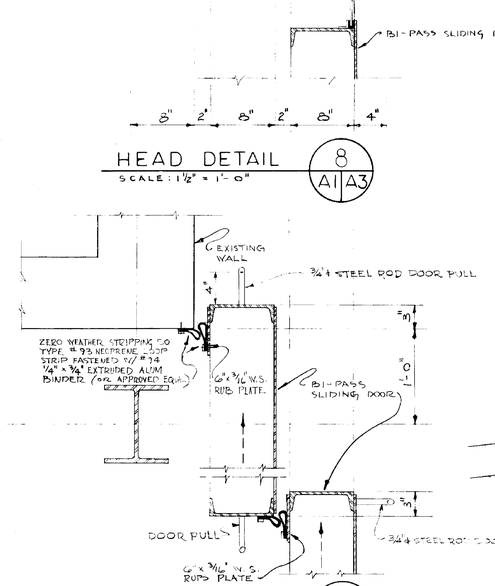

JAMB DETAIL 9
SCALE: 1½" = 1'-0"

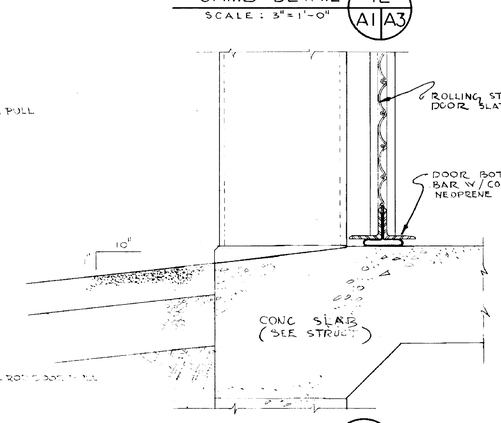

SILL DETAIL 13
SCALE: 3" = 1'-0"

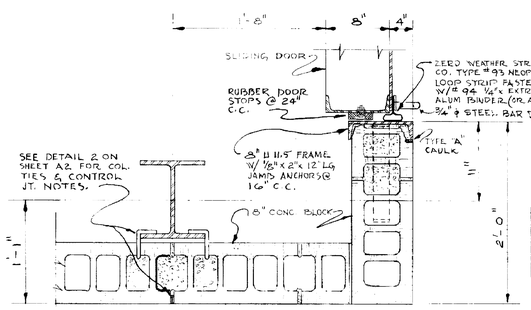

JAMB DETAIL 10
SCALE: 1½" = 1'-0"

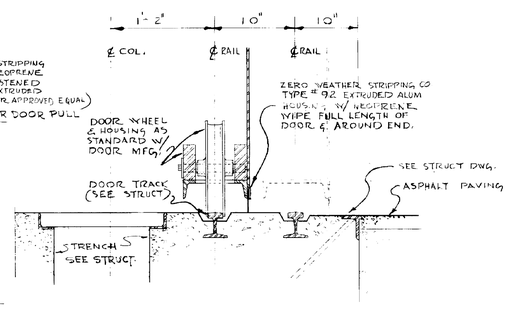

SILL DETAIL 14
SCALE: 1½" = 1'-0"

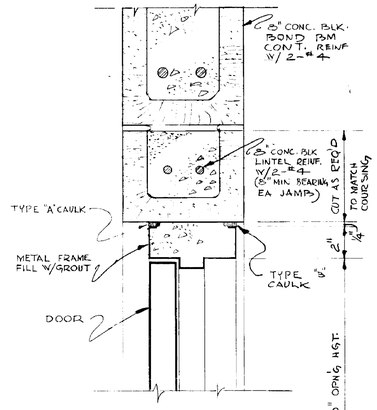

HEAD DETAIL 15
SCALE: 3" = 1'-0"

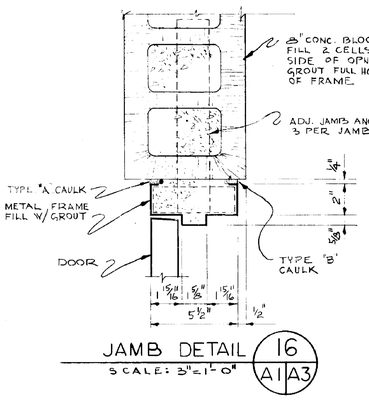

JAMB DETAIL 16
SCALE: 3" = 1'-0"

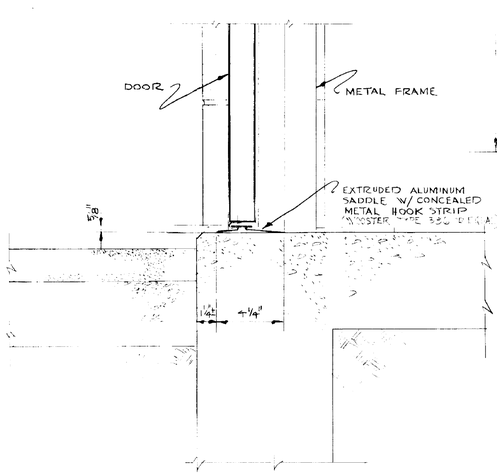

SILL DETAIL 17
SCALE: 1½" = 1'-0"

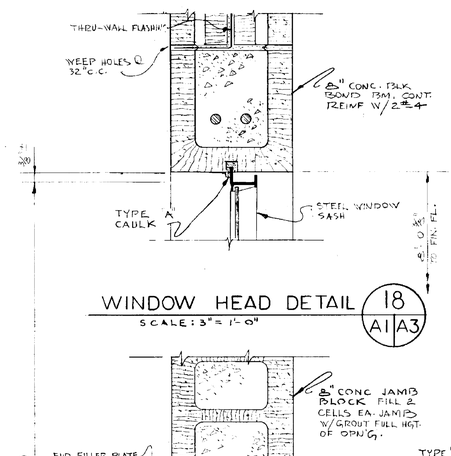

WINDOW HEAD DETAIL 18
SCALE: 3" = 1'-0"

WINDOW JAMB DETAIL 19
SCALE: 3" = 1'-0"

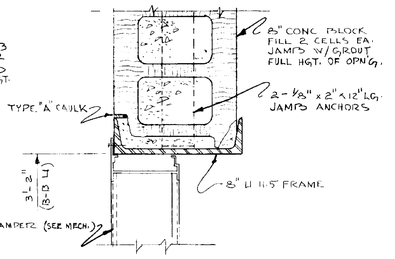

LOUVER JAMB DETAIL 22
SCALE: 3" = 1'-0"

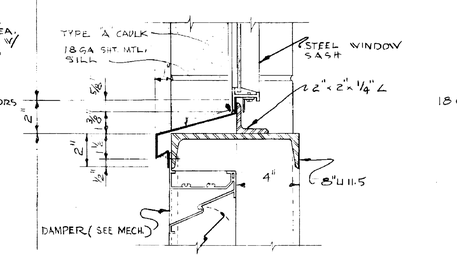

WINDOW SILL DETAIL 20
SCALE: 3" = 1'-0"

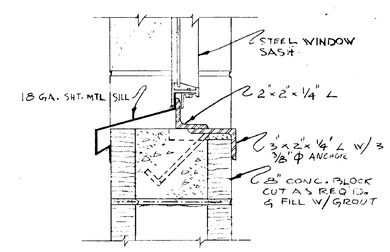

WINDOW SILL DETAIL 23
SCALE: 3" = 1'-0"

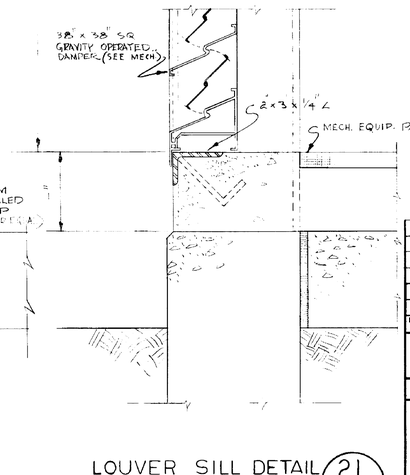

LOUVER SILL DETAIL 21
SCALE: 3" = 1'-0"

REV.	BY	DATE	C.I. NO.	APPROVED

NATIONAL AERONAUTICS AND SPACE ADMINISTRATION — M S F C — HUNTSVILLE, ALABAMA

FACILITIES AND DESIGN OFFICE

BUILDING 4619
TEST FIXTURE PREPARATION ROOM
ARCHITECTURAL
DOOR & WINDOW DETAILS

PROJECT NO. 64-18

SUBMITTED: [illegible] PROJ. ENGR. RES. PROJECT ENGINEER — AE — DATE: 3-5-

SUBMITTED: [illegible] CHIEF CONTRACT DESIGN SECTION — APPROVAL RECOMMENDED: [illegible] — LAB. — DATE: [illegible]

APPROVAL RECOMMENDED: MS for all for CHIEF ARCHITECTURAL SECTION — DESIGN DATE: 2-9-64

DESIGNED C.M. TORBOROUGH — DRAWN E.W. BARNARD — CHECKED TARBOROUGH — SCALE AS NOTED

APPROVED: G. D. Gramey Jr. CHIEF DESIGN BRANCH — NASA DATE: 3-30-64

SPEC. NO. F&D-444

FILE NO. 2935 MSFC

DRWG. NO. F&D-B-4619-A3

CITY — MAR 25 1964 — A3

MSFC-FORM 232 (REV. APRIL 1962)

4619

MSFC MASTER BID DISK 11-18-2013

DRAWING INDEX

BUILDING NO. 4619

FILE NO.	DRAWING NO.	SHEET NO.	TITLE – TEST FIXTURE PREPARATION ROOM
2931	F&D-B-4619-C1	C1	CIVIL - LOCATION MAP & DRAWING INDEX
2932	F&D-B-4619-C2	C2	CIVIL - PLAN, SECTIONS & DETAILS
2933	F&D-B-4619-A1	A1	ARCHITECTURAL - FLOOR PLAN, SCHEDULES & ELEVATIONS
2934	F&D-B-4619-A2	A2	ARCHITECTURAL - ROOF PLAN, CROSS-SECTION & DETAILS
2935	F&D-B-4619-A3	A3	ARCHITECTURAL - DOOR & WINDOW DETAILS
2936	F&D-B-4619-S1	S1	STRUCTURAL - FDN. & FL. SLAB PLAN, SECTIONS & DETAILS
2937	F&D-B-4619-S2	S2	STRUCTURAL - ROOF & CRANE GIRDER PLANS, SECTIONS & DETS.
2938	F&D-B-4619-S3	S3	STRUCTURAL - ELEVATIONS, SECTIONS & DETAILS
2939	F&D-B-4619-M1	M1	MECHANICAL - PLANS, SECTIONS, DETAILS
2940	F&D-B-4619-M2	M2	MECHANICAL - PIPING PLANS & MISC. DETAILS
2941	F&D-B-4619-P1	P1	PIPING-PLUMPING PLANS
2942	F&D-B-4619-E1	E1	ELECTRICAL - LIGHTING PLAN & SCHEDULES
2943	F&D-B-4619-E2	E2	ELECTRICAL - POWER PLAN & DETAILS

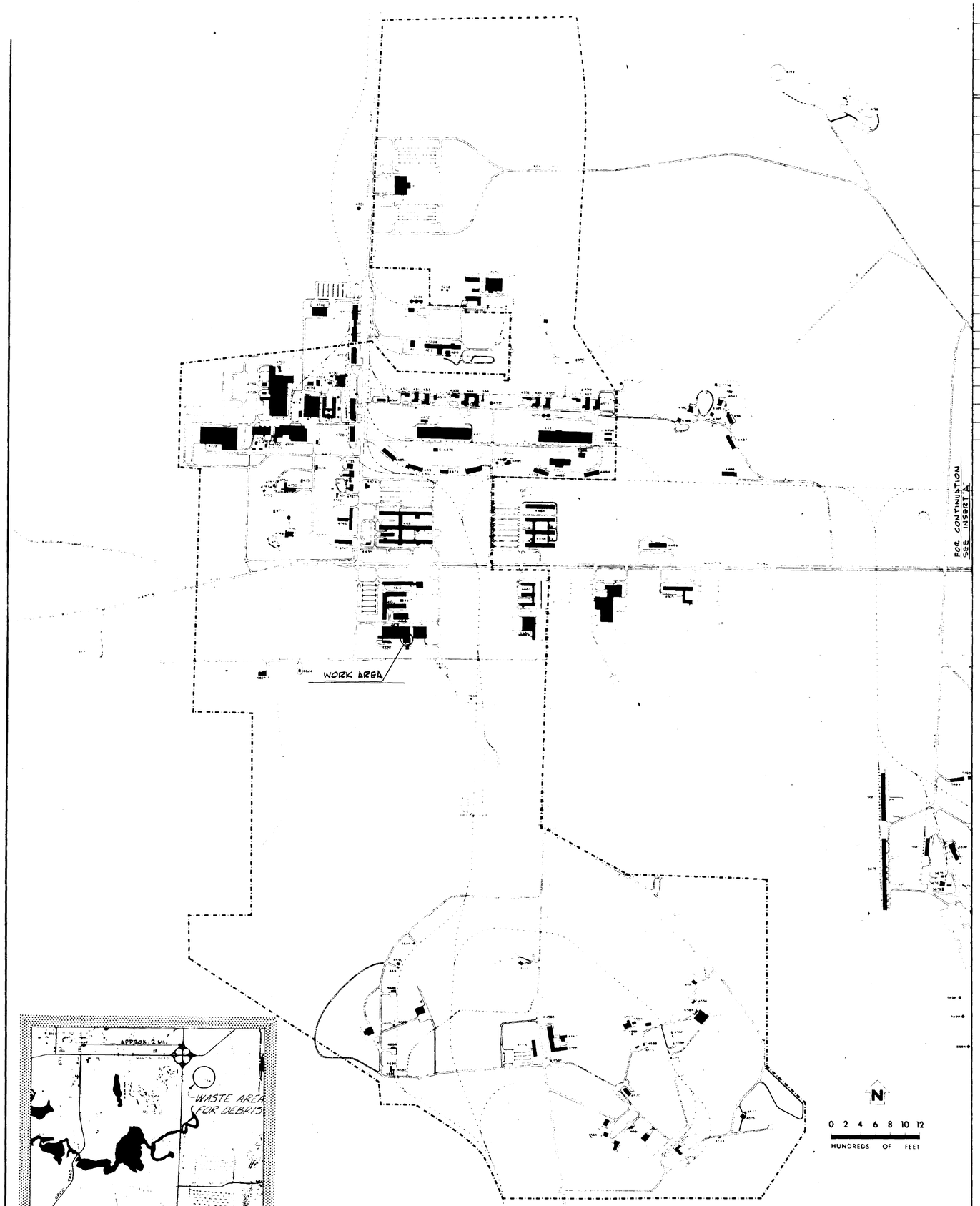

MARSHALL SPACE FLIGHT CENTER - HUNTSVILLE, ALABAMA

LOCATION MAP

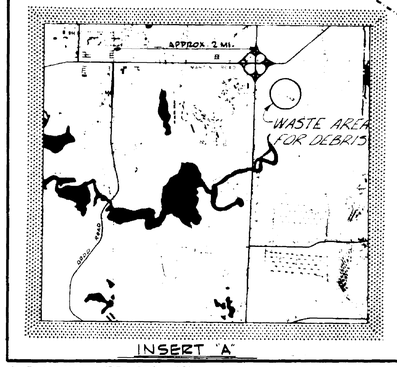

INSERT 'A'

NATIONAL AERONAUTICS AND SPACE ADMINISTRATION — M S F C HUNTSVILLE ALABAMA

FACILITIES AND DESIGN OFFICE

BLDG. 4619
TEST FIXTURE PREPARATION ROOM
CIVIL
LOCATION MAP & DRAWING INDEX

PROJ. NO. G4-18	SUBMITTED CHIEF CONTRACT DESIGN SECT.	FILE NO MSFC 2931
SUBMITTED M & Rec. R&S PROD. ENGR. AS DATE 3-27-64	APPROVAL RECOMMENDED AS DATE 3-27-64	APPROVED R.D. Ramsey, Jr. CHIEF, DESIGN BRANCH MASA DATE 3-30-64
DESIGNED DRAWN J.W. BAUGH CHECKED	APPROVAL RECOMMENDED CHIEF, CIVIL SECTION DESIGN DATE	DRWG. NO F&D-B-4619-C1
SCALE AS NOTED	SPEC NO F&D-447	

C1

MSFC FORM 26 REV. DEC. 1960

MSFC MASTER BID DISK 11-18-2013

NOTICE.— WHEN GOVERNMENT DRAWINGS, SPECIFICATIONS, OR OTHER DATA ARE USED FOR ANY PURPOSE OTHER THAN IN CONNECTION WITH A DEFINITELY RELATED GOVERNMENT PROCUREMENT OPERATION, THE UNITED STATES GOVERNMENT THEREBY INCURS NO RESPONSIBILITY NOR ANY OBLIGATION WHATSOEVER; AND THE FACT THAT THE GOVERNMENT MAY HAVE FORMULATED, FURNISHED, OR IN ANY WAY SUPPLIED THE SAID DRAWINGS, SPECIFICATIONS, OR OTHER DATA IS NOT TO BE REGARDED BY IMPLICATION OR OTHERWISE AS IN ANY MANNER LICENSING THE HOLDER OR ANY OTHER PERSON OR CORPORATION, OR CONVEYING ANY RIGHTS OR PERMISSION TO MANUFACTURE, USE, OR SELL ANY PATENTED INVENTION THAT MAY IN ANY WAY BE RELATED THERETO.

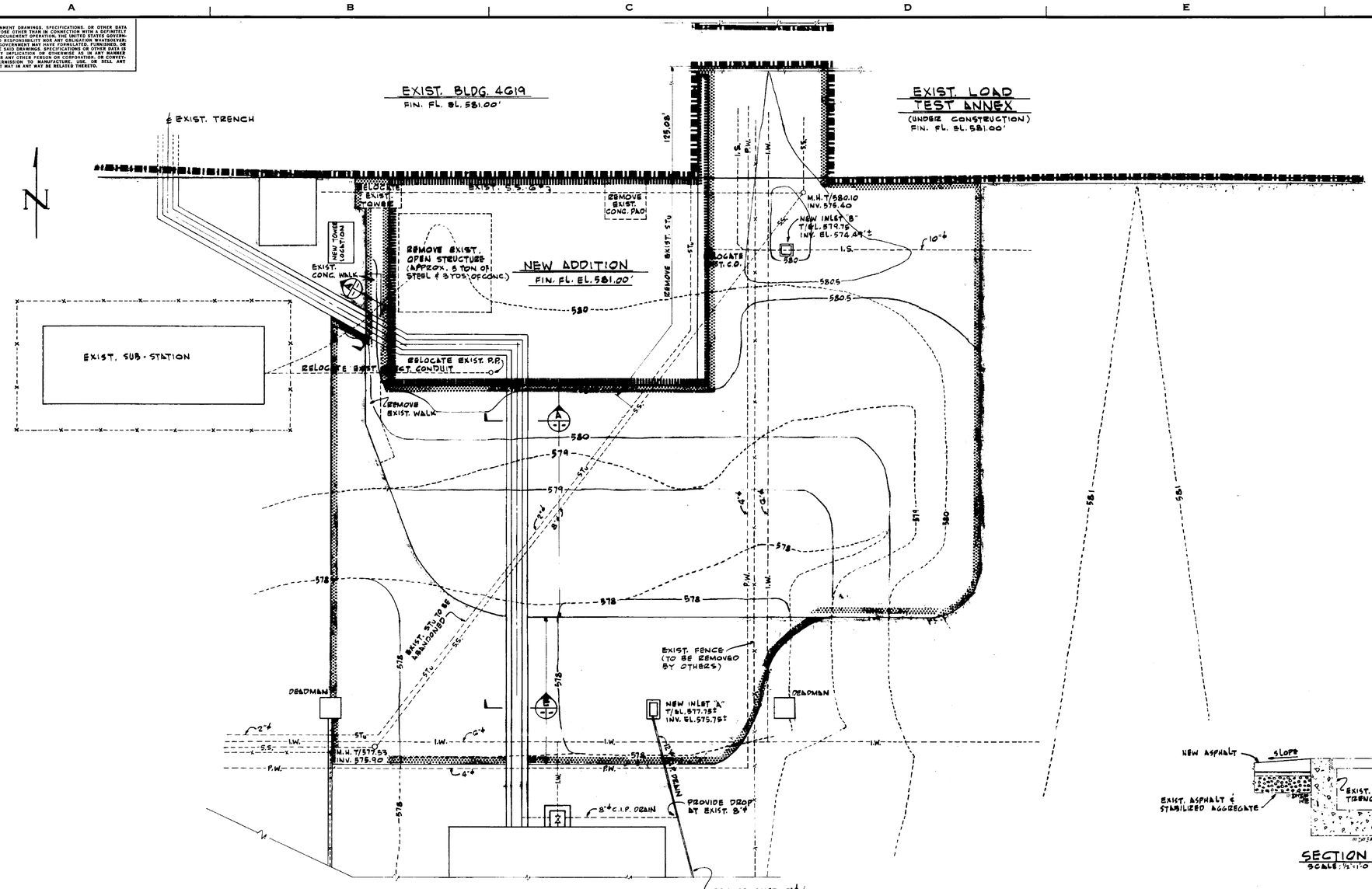

PLAN
SCALE: 1"=10'

LEGEND

EXISTING	EXISTING (REMOVE)		NEW
		BUILDINGS	
		OUTSIDE STRUCTURES	
		ASPHALT	
578		GRADE CONTOURS	578
P.W.		POTABLE WATER	
I.W.		INDUSTRIAL WATER	
S.S.		SANITARY SEWER	
I.S.		INDUSTRIAL SEWER	
STU		STEAM LINE	
x x		CHAIN-LINK FENCE	
		DRAIN PIPES & STRUCTURES	

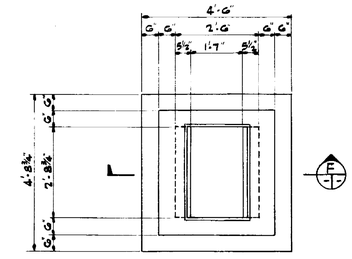

DETAIL INLET "B"
SCALE: ½"=1'-0"

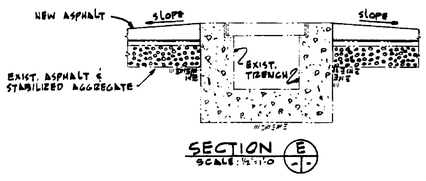

SECTION E
SCALE: ½"=1'-0"

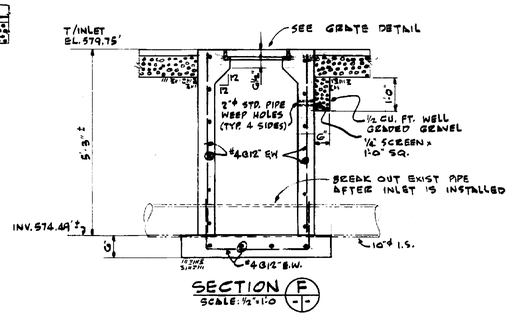

SECTION F
SCALE: ½"=1'-0"

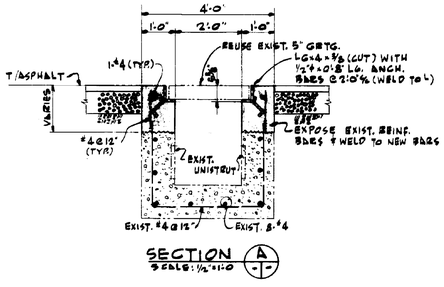

SECTION A
SCALE: ½"=1'-0"

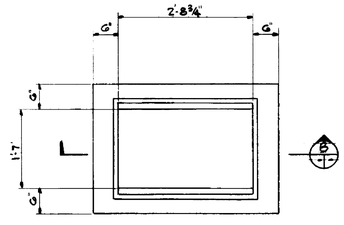

DETAIL INLET "A"
SCALE: ¾"=1'-0"

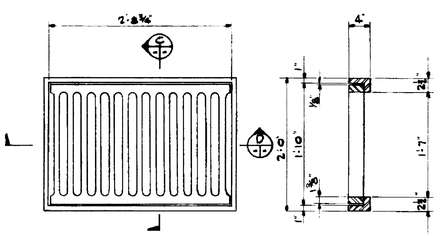

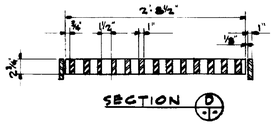

GRATE DETAIL
SCALE 1"=1'-0"

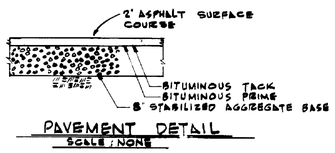

PAVEMENT DETAIL
SCALE: NONE

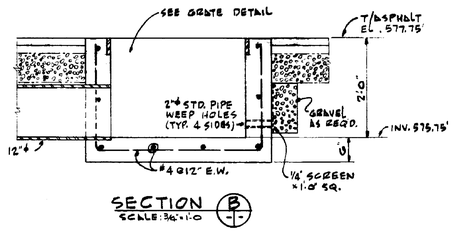

SECTION B
SCALE: ¾"=1'-0"

REV.	BY	DATE		C.I. NO.	APPROVED

NATIONAL AERONAUTICS AND SPACE ADMINISTRATION — M S F C — HUNTSVILLE, ALABAMA

FACILITIES AND DESIGN OFFICE

BLDG. 4619
TEST FIXTURE PREPARATION ROOM
CIVIL
PLAN, SECTIONS & DETAILS

PROJ. NO. 64-18	SUBMITTED: CHIEF, CONTRACT DESIGN SECT.	FILE NO. MSFC 2932
SUBMITTED: M. A. Rood, RES. PROJ. ENGR.	APPROVAL RECOMMENDED:	APPROVED: R. D. Ramsey, Jr. CHIEF, DESIGN BRANCH
AE. DATE: 3-27-64	LAB. DATE: 3-27-64	NASA DATE: 3-30-64
DESIGNED B.S.S. DRAWN J.W. BAUGH CHECKED B.S.S.	APPROVAL RECOMMENDED: CHIEF, CIVIL SECTION	DRWG. NO. F&D-B-4619-C2
SCALE: 1"=10'	DESIGN DATE: Mar. 11, 1964	
	SPEC. NO. F&D-444	

APPROVED FOR SAFETY — MAR 25 1964 — DATE

C2

MSFC MASTER BID DISK 11-18-2013

NOTICE. WHEN GOVERNMENT DRAWINGS, SPECIFICATIONS, OR OTHER DATA ARE USED FOR ANY PURPOSE OTHER THAN IN CONNECTION WITH A DEFINITELY RELATED GOVERNMENT PROCUREMENT OPERATION, THE UNITED STATES GOVERNMENT THEREBY INCURS NO RESPONSIBILITY NOR ANY OBLIGATION WHATSOEVER, AND THE FACT THAT THE GOVERNMENT MAY HAVE FORMULATED, FURNISHED, OR IN ANY WAY SUPPLIED THE SAID DRAWINGS, SPECIFICATIONS OR OTHER DATA IS NOT TO BE REGARDED BY IMPLICATION OR OTHERWISE AS IN ANY MANNER LICENSING THE HOLDER OR ANY OTHER PERSON OR CORPORATION, OR CONVEYING ANY RIGHTS OR PERMISSION TO MANUFACTURE, USE, OR SELL ANY PATENTED INVENTION THAT MAY IN ANY WAY BE RELATED THERETO.

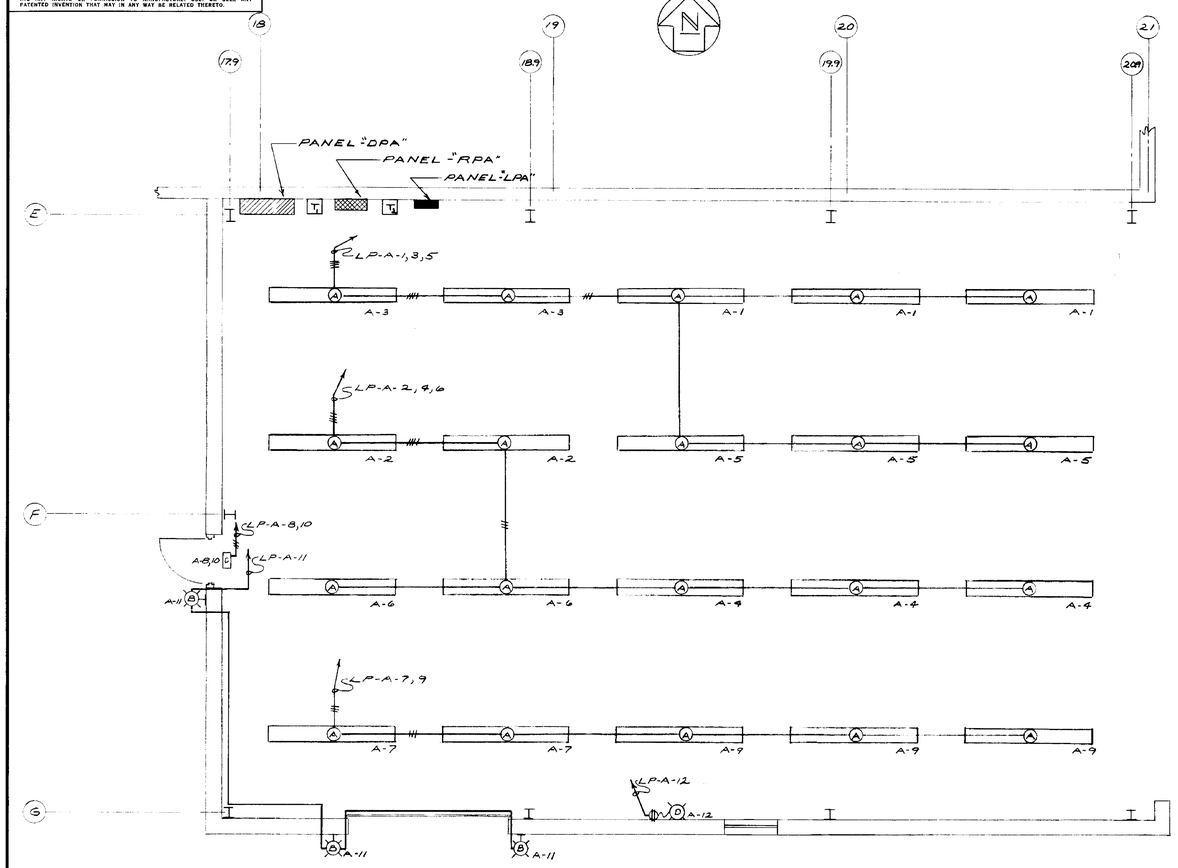

LIGHTING PLAN

SCALE: 1/4"=1'-0"

PANEL SCHEDULE

LIGHTING PANEL - "LP-A"
120/208V., 3Ø, 4W.,

CIR. NO.	BKR. AMPS.	NO. POLES	WIRE SIZE	LOCATION	WATTS A	WATTS B	WATTS C
1	20	1	12	MAIN LIGHTS	1365		
2	20	1	12	" "	910		
3	20	1	12	" "		910	
4	20	1	12	" "		1365	
5	20	1	12	" "			1365
6	20	1	12	" "			910
7	20	1	12	" "	910		
8	20	1	12	EXIT LIGHT	25		
9	20	1	12	MAIN LIGHTS		1365	
10	20	1	12	EXIT LIGHT		25	
11	20	1	12	OUTSIDE LIGHTS			600
12	20	1	12	AUXILIARY EMERG. LT.			50
13	20	1	12	RECEPTACLES - N. WALL	200		
14	20	1	12	" W. WALL	200		
15	20	1	12	" N. WALL		200	
16	20	1	12	" W. WALL		200	
17	20	1	12	" W. C.			100
18	20	1	12	" S. WALL			300
19	15	1	12	AIR UNIT CONTROLS	200		
20	20	1	12	RECEPTACLES - S. WALL	200		
21	20	1	12	UNIT HEATERS			1500
22	20	1					
23	20	1					
24	20	1					

PANEL SCHEDULE

RECEPTACLE PANEL - "RP-A"
240V., 3P., 3Ø, 3W.

CIR. NO.	BKR. AMPS.	POLES	WIRE SIZE	FRAME	TYPE LOAD
1	50	3	6	EH	RECEPTACLE
2	50	3	6	EH	"
3	50	3	6	EH	"
4	50	3	6	EH	"
5	50	3	6	EH	"
6	50	3	6	EH	"
7	50	3	6	EH	"
8	50	3	6	EH	"
9	50	3	6	EH	"
10	50	3	6	EH	"
11	—	3	—	EH	SPACE ONLY
12	—	3	—	EH	" "

PANEL SCHEDULE

DISTRIBUTION PANEL - "DP-A"
480V., 3P., 3Ø, 400A., MAIN BKR. (LAB. FR.)

CIR. NO.	BKR. AMPS.	POLES	WIRE SIZE	FRAME	LOCATION & TYPE
1	15	3	12	EH	EXHAUST FAN F-1
2	15	3	12	EH	EXHAUST FAN F-2
3	15	3		EH	SPARE
4	15	3		EH	SPARE
5	15	3		EH	SPARE
6	15	3		EH	SPARE
7	15	3		EH	SPARE
8	15	3		EH	SPARE
9	70	3	6	F	45 KVA DRY TYPE TRANSFORMER
10	30	3	10	F	15 KVA DRY TYPE TRANSFORMER
11	30	3	—	F	SPARE
12	50	3	6	F	CRANE RAIL
13	70	3	8	KA	440 V. WELDING RECEPTACLE
14	70	3	8	KA	" " "
15	70	3	8	KA	" " "
16	70	3	8	KA	" " "
17	70	3	8	KA	" " "
18	70	3	8	KA	" " "
19	70	3	8	KA	" " "
20	70	3	—	KA	SPARE
21	—	3	—	KA	SPACE ONLY
22	—	3	—	KA	" "

LIGHTING FIXTURE SCHEDULE

MARK NO.	MANUFACTURER	CAT. NO.	LAMPS NO.	LAMPS WATTS	LAMPS TYPE	MT'G. HG'T.	TYPE MT'G.	REMARKS
Ⓐ	SMITHCRAFT	PFS2-96	2	215	P/G	19'-6"	PENDANT	
Ⓑ	HOLOPHANE	420	1	200	I.F.	8'-0"	WALL	
Ⓒ	ALKCO	EGO-12	2	25	I.F.	8'-0"	WALL	EXIT LIGHT W/ GREEN LETTERS.
Ⓓ	ELEC. CORD CO.	88	2	25	6V.	8'-0"	WALL	AUX. EMERGENCY LIGHT

PANELBOARD SCHEDULE

MARK	MANU.	CAT. NO.	MAIN AMPS	MAIN TYPE	MAIN SERV.	BRANCHES 1 P.	BRANCHES 2 P.	BRANCHES 3 P.	BRANCHES SPACE	MT'G.	REMARKS
LP-A	WEST.	NA18-24-4L100	100	LUGS	120/208 3Ø,4W	23-20A 1-15A				SURF.	ISOLATED NEUT. & SEPARATE GND. BUS.
"RP-A"	WEST.	NDP	100	LUGS	240V.,3Ø, 3W.			10	2	SURF.	DO
"DP-A"	WEST.	CDP	400	BKR LAB-FR	480V. 3Ø.			8-20A 2-30A 1-60A 1-70A	2	SURF.	DO

NOTE: ALL GND. BUSSES SHALL BE CONNECTED TO BURIED ⅝ GND.

ELECTRICAL LEGEND

- A-1 — FLUORESCENT FIXTURE - SHOWN W/FIXTURE MARKED "A" C/R 1, PANEL "A".
- WALL OUTLET - BRACKET TYPE FIXTURE.
- AUXILIARY LIGHT W/FLEXIBLE CONNECTION TO RECEPTACLE. RECEPT. TO BE 15A., 125V., 3W. HUBBELL #5261 OR EQUAL MTD. IN FS BOX & ANCHOR LOCKING CAP HUBBELL # 5280 OR EQUAL.
- WALL OUTLET - DUPLEX RECEPT. SURFACE MTD. IN FS BOX, 15A., 125V., 3W. (1P. GND.) HUBBELL #5262 OR EQUAL, MT'G. HGT. - 18"
- NEW LIGHTING PANEL - SEE PANEL SCHEDULE.
- NEW DISTRIBUTION PANEL - SEE PNL. SCHEDULE.
- BRANCH C/R. - CONDUIT EXPOSED.
- HOMERUN TO PANEL (20A., 1P. BKR. UNLESS NOTED OTHERWISE) ←— 1 #12, 1 #12 GND. - ¾"C.,
  ←—— 1Ø 3 #12, 1 #12 GND. - ¾"C. ETC.
- RISER - UP OR DOWN AS NOTED.
- COMB. FUS. S.W. TYPE MAGNETIC MTR. STARTER. (JUMPER OUT FUSE CLIPS) FURN. W/MECH. EQUIP., INST. UNDER ELECT. WORK
- SPECIAL PURPOSE 220V. RECEPTACLE - 60A, 480V., 3W, #60, SURFACE MOUNTED. A&S #8414 OR EQUAL, FURNISH W/ A&S #8418 PLUG MT'G. HEIGHT 2'-0"
- 440V. WELDING RECEPTACLE - 100A, 600V., 3W, 4P., SURFACE INT'D. A&S # 7134 OR EQUAL. FURNISH W/R&S # 7138 PLUG. MT'G. HEIGHT 2'-0"
- PUSH BUTTON STATION - START-STOP, ALLEN-BRADLEY #855A OR EQUAL
- CR — CONTROL RELAY - 2 NO. AND 2 N.C. CONTACTS, ALLEN-BRADLEY # 700BR32 OR EQUAL
- EXIT LIGHT - SEE SCHEDULE
- CONDUIT & WIRE, CONCEALED IN SLAB, N.I.C. (UNLESS NOTED OTHERWISE)
- T1 — 45 KVA DRY TYPE TRANSFORMER
- T2 — 15 KVA DRY TYPE TRANSFORMER
- GROUND BUS - ¼ M.H.D. BARE CU. BURIED 2'-0" BELOW GRADE
- MAGNETIC MOTOR STARTER - WATER TIGHT, FURN. W/MECH. EQUIP. & INSTALLED UNDER ELECT. WORK

ELECTRICAL NOTES

1. ALL ELECTRICAL WORK SHALL CONFORM TO THE N.E.C. AS A MINIMUM STANDARD.
2. MINIMUM WIRE SIZE SHALL BE #12 AWG, MINIMUM CONDUIT SIZE - ¾"
3. SEE MECHANICAL DWG'S. FOR EXACT LOCATION OF MECHANICAL EQUIPMENT.
4. ALL EXPOSED NON-CURRENT CARRYING PARTS OF ELECTRICAL EQUIPMENT SHALL BE GROUNDED BY MEANS OF AN ADDITIONAL WIRE W/GREEN COVERING RUN W/C/R. CONDUCTORS.

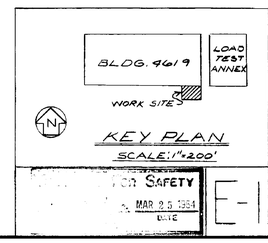

REV.	BY	DATE		C. I. NO.	APPROVED
1	TM	3-19-65	REVISED PNL SCHEDULES "LP-A" & "DP-A"		EBF

NATIONAL AERONAUTICS AND SPACE ADMINISTRATION — M S F C — HUNTSVILLE, ALABAMA

FACILITIES AND DESIGN OFFICE

BUILDING NO. 4619
TEST FIXTURE PREP ROOM
ELECTRICAL
LIGHTING PLAN & SCHEDULES

PROJ. NO. 64-18 — SUBMITTED: Chief Contract Des. Sec. — FILE NO. MSFC 2942

SUBMITTED: RES. PROJ. ENGR.	APPROVAL RECOMMENDED:	APPROVED: Chief Design Branch
AE. DATE: 2-25-64	LAB. DATE:	NASA DATE: 3-30-64
DESIGNED R.L.B. DRAWN R.F.H. CHECKED	APPROVAL RECOMMENDED: Chief Elect. Sec.	DRWG. NO. F&D-B-4619-E-1
SCALE: AS NOTED	DESIGN DATE: 3-24-64	SPEC. NO. F&D.444

ON SAFETY — MAR 25 1964 — DATE

MSFC-FORM 232 (REV. APRIL 1962)

4619

MSFC MASTER BID DISK 11-18-2013

NOTICE - WHEN GOVERNMENT DRAWINGS, SPECIFICATIONS, OR OTHER DATA ARE USED FOR ANY PURPOSE OTHER THAN IN CONNECTION WITH A DEFINITELY RELATED GOVERNMENT PROCUREMENT OPERATION, THE UNITED STATES GOVERNMENT THEREBY INCURS NO RESPONSIBILITY NOR ANY OBLIGATION WHATSOEVER; AND THE FACT THAT THE GOVERNMENT MAY HAVE FORMULATED, FURNISHED, OR IN ANY WAY SUPPLIED THE SAID DRAWINGS, SPECIFICATIONS OR OTHER DATA IS NOT TO BE REGARDED BY IMPLICATION OR OTHERWISE AS IN ANY MANNER LICENSING THE HOLDER OR ANY OTHER PERSON OR CORPORATION, OR CONVEYING ANY RIGHTS OR PERMISSION TO MANUFACTURE, USE, OR SELL ANY PATENTED INVENTION THAT MAY IN ANY WAY BE RELATED THERETO.

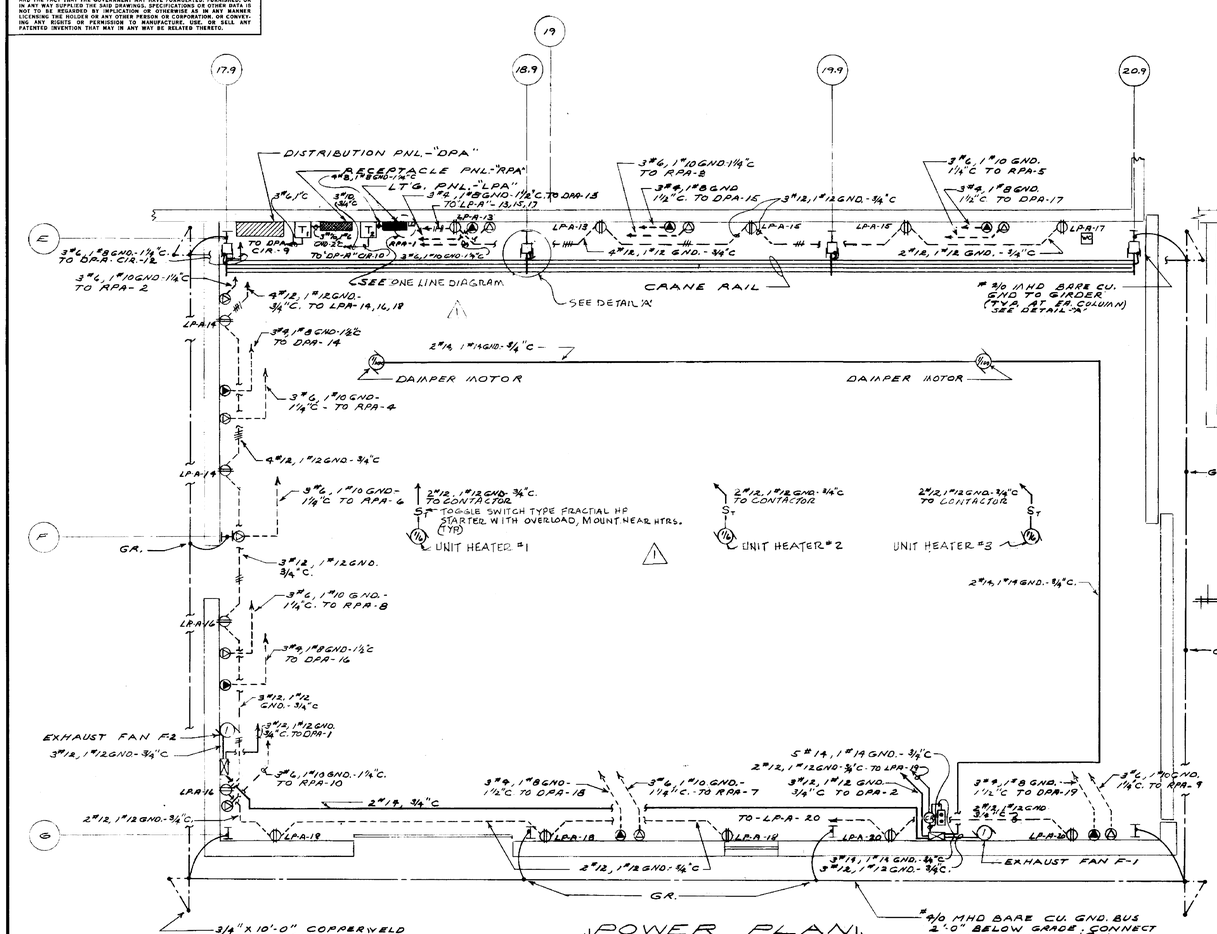

POWER PLAN
SCALE: 1/4"=1'-0"

PARTIAL PLAN
NEW LOCATION OF COOLING TOWER
SCALE: 1/4"=1'-0"

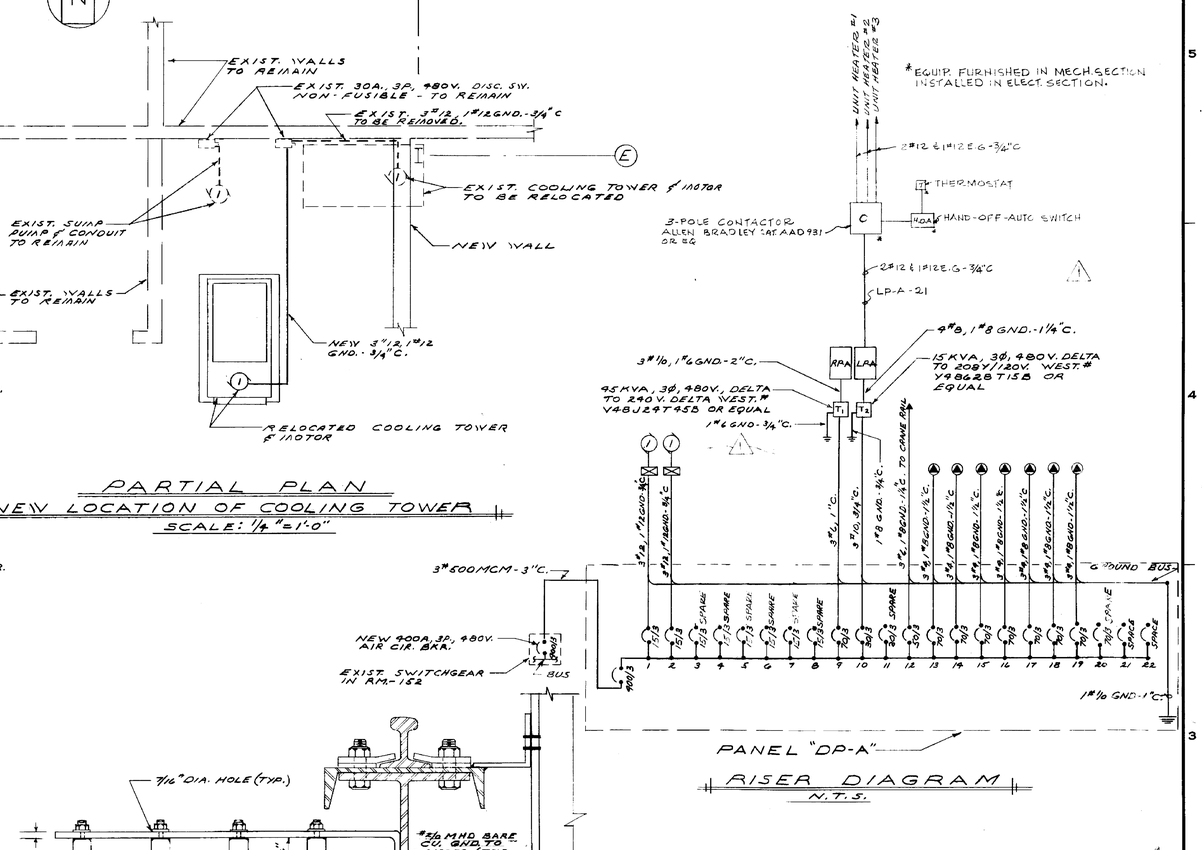

RISER DIAGRAM
N.T.S.

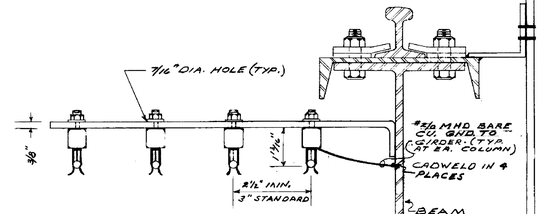

DETAIL - "A"
CRANE RAIL MOUNTING
N.T.S.

DUCT-O-WIRE CO.# W2-100 - 100A. INSULATED WIRE OR EQUAL.

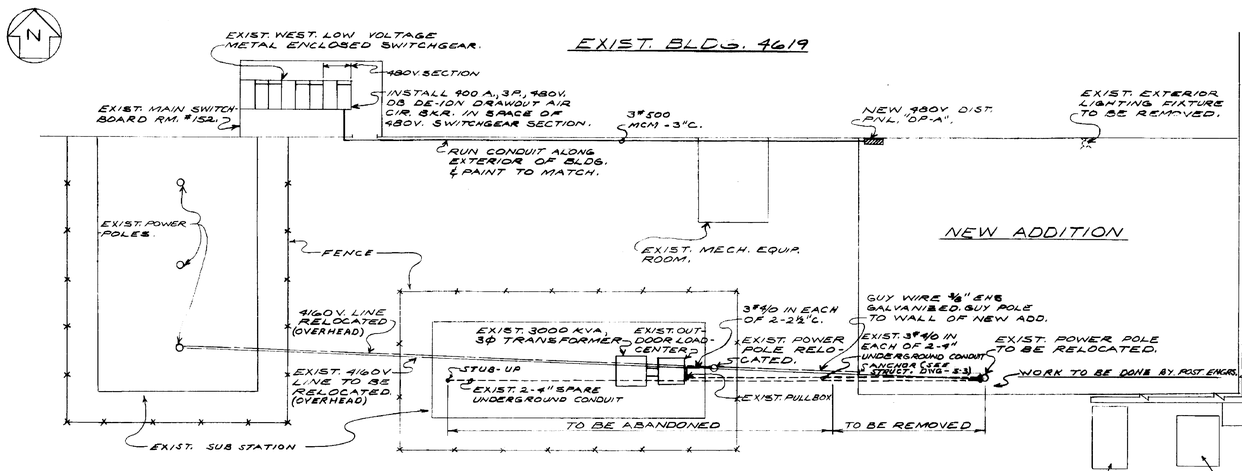

4160V LINE RELOCATION & 480V POWER FEEDER
SCALE: 1"=10'-0"

NOTE:
1. POLE LINE RE-LOCATION TO BE DONE BY POST ENGRS.
2. TEMPORARY DOWN GUY TO REMAIN IN SERVICE UNTIL PERMANENT SPAN GUY CAN BE INSTALLED BY POST ENGRS.

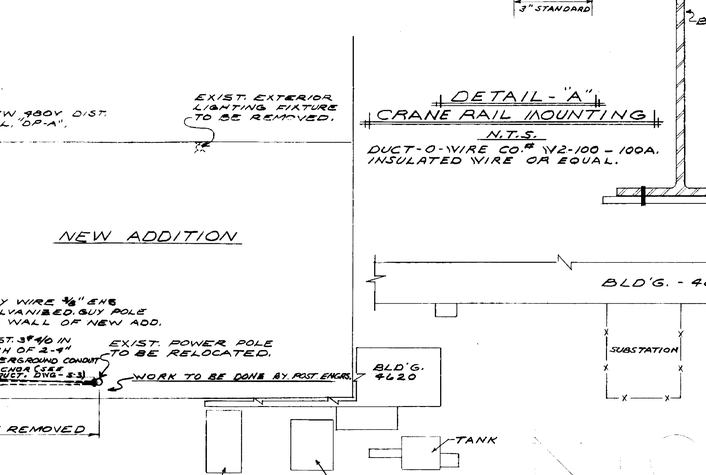

SITE PLAN
SCALE: 1"=30'-0"

REV.	BY	DATE		C.I. NO.	APPROVED
1	TM	5-18-64	CHANGED POWER SUPPLY FOR UNIT HTR'S.		

NATIONAL AERONAUTICS AND SPACE ADMINISTRATION — M S F C — HUNTSVILLE, ALABAMA

FACILITIES AND DESIGN OFFICE

BUILDING 4619
TEST FIXTURE PREP. ROOM
ELECTRICAL
POWER PLAN AND DETAILS

PROJECT NO. 69-18	SUBMITTED: S. E. Austin, CHIEF, CONTRACT DESIGN		FILE NO. M S F C 2942
SUBMITTED: M. A. Roose, RES. PROJECT ENGR.	APPROVAL RECOMMENDED:	APPROVED: S. D. Kramer Jr. CHIEF, DESIGN BRANCH	
AE. DATE: 2-25-64	LAB. DATE:	NASA DATE: 3-30-64	
DESIGNED R.L. BARBER, DRAWN R.B.H., CHECKED S.E. Austin	APPROVAL RECOMMENDED: E. J. Wemmer, CHIEF, ELECTRICAL SECT.	DESIGN DATE: 3-24-64	DRWG. NO. F&D-B-4619-E2
SCALE: AS NOTED		SPEC. NO. F&D-441	

E-2

MSFC-FORM 232 (REV. APRIL 1962)

4619

MSFC MASTER BID DISK 11-18-2013

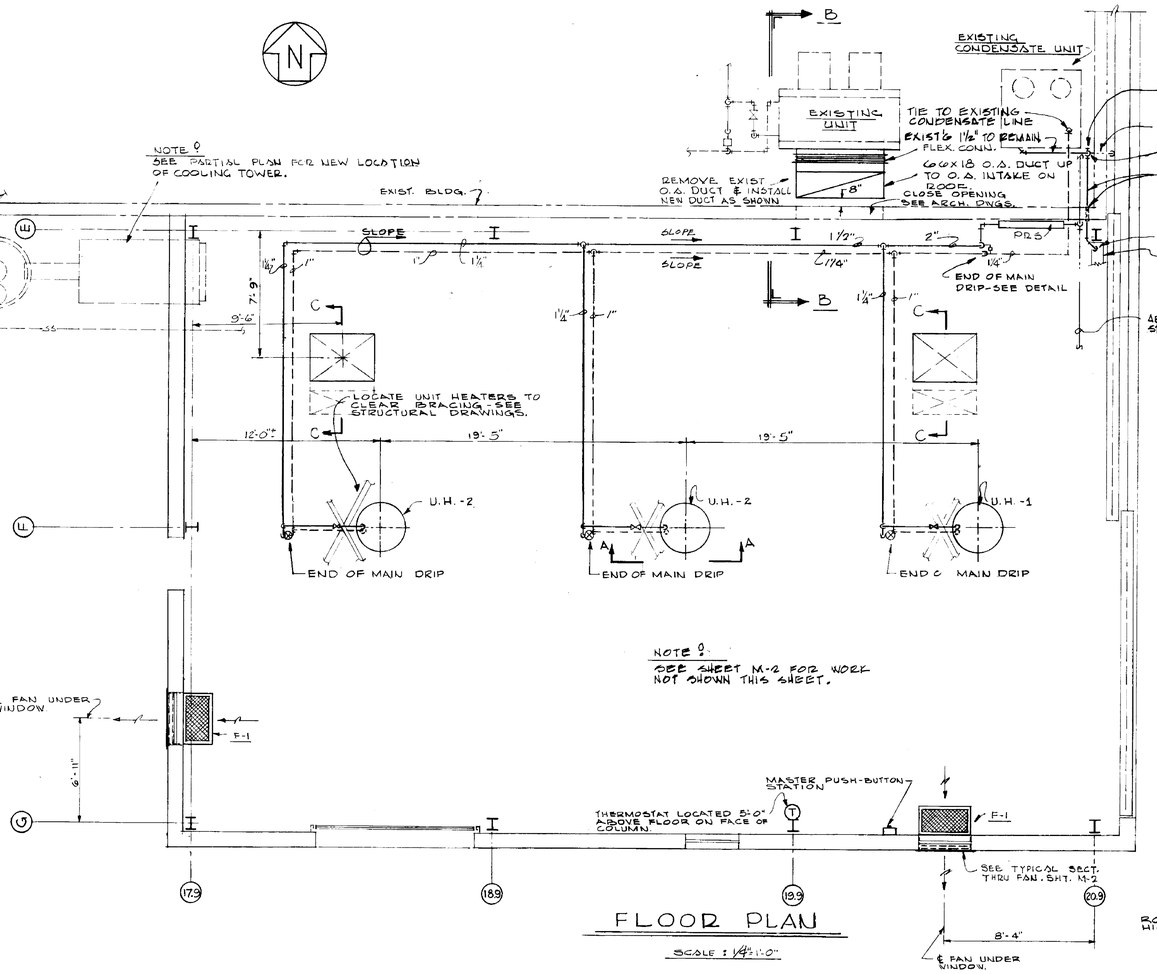

FLOOR PLAN

SCALE : ¼"=1'-0"

⚠1 * RE-USE EXISTING PIPING. ADDITIONAL PIPING, IF REQUIRED, SHALL BE ASTM A53, BLACK, SCHEDULE 40.

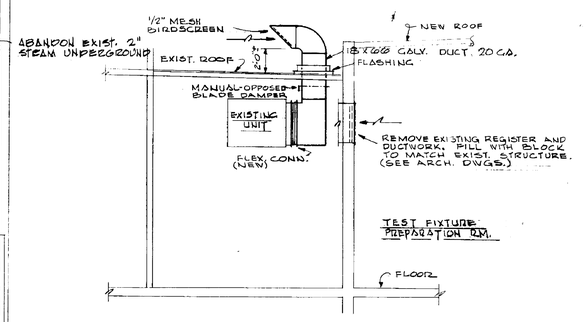

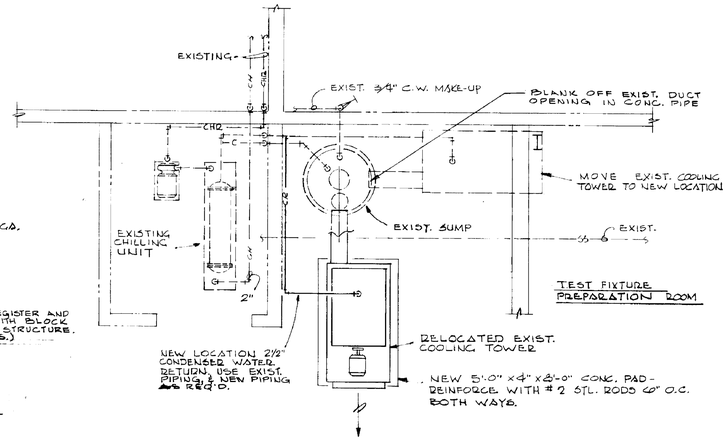

PARTIAL PLAN - NEW LOCATION OF COOLING TOWER

SCALE : ¼"=1'-0"

SECTION B-B

SCALE : ¼"=1'-0"

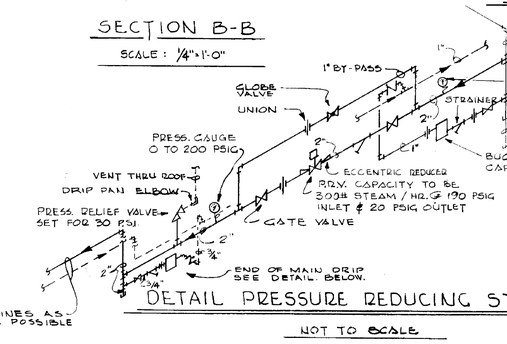

DETAIL PRESSURE REDUCING STATION

NOT TO SCALE

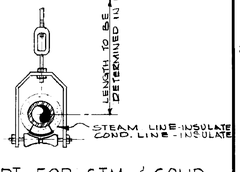

TYPICAL PIPE SUPPORT FOR STM. & COND.

N.T.S.

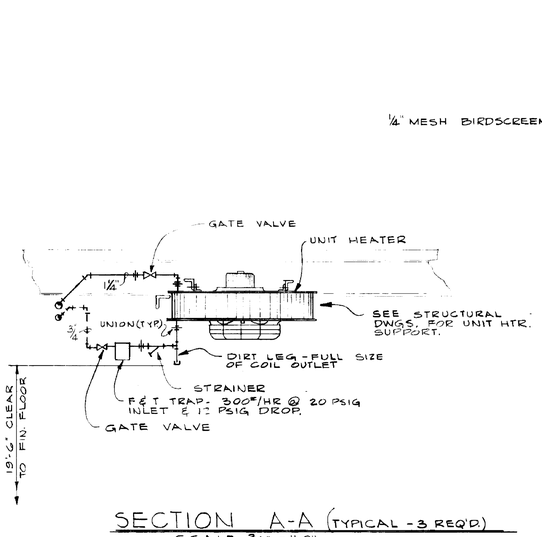

SECTION A-A (TYPICAL - 3 REQ'D)

SCALE ¾"=1'-0"

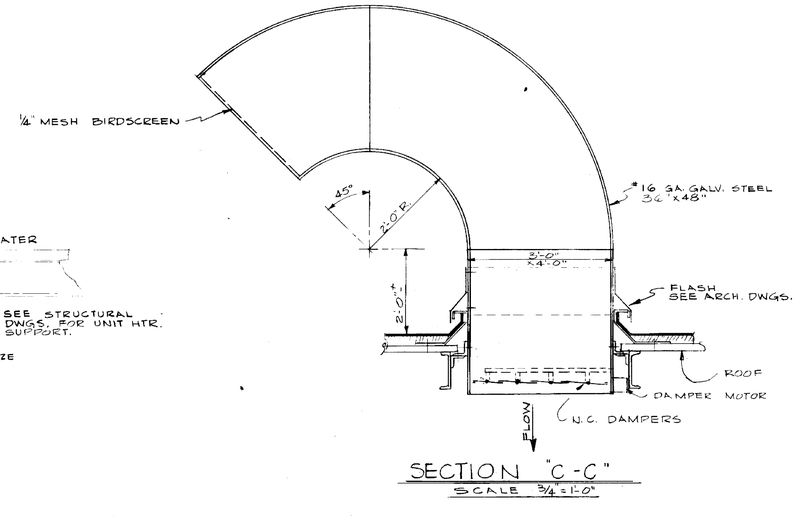

SECTION "C-C"

SCALE ¾"=1'-0"

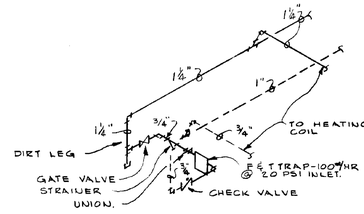

END OF MAIN DRIP DETAIL

N.T.S.

REV.	BY	DATE		C.I. NO.	APPROVED
⚠1	JJR	9-30-64	RE-ROUTED CONDENSATE O'FLOW	12045-3	

NATIONAL AERONAUTICS AND SPACE ADMINISTRATION — M S F C — HUNTSVILLE, ALABAMA

FACILITIES & DESIGN OFFICE

BUILDING 4619
TEST FIXTURE PREPARATION ROOM
MECHANICAL
PLANS, SECTIONS, DETAILS

BLDG. 4619 | LOAD TEST ANNEX | WORK SITE

KEY PLAN
SCALE 1"=200'

APPROVED FOR SAFETY
GEN. ENGR. — DATE: MAR 25 1964

PROJECT NO. 64-18	SUBMITTED: CHIEF, CONTRACTOR DES. SECT.	FILE NO. MSFC 2939
SUBMITTED: M. A. Rose	APPROVAL RECOMMENDED:	APPROVED: CHIEF, DESIGN BRANCH
R. SUBST. PROJECT ENGR.		
AE: DATE: 3-27-64	LAB: DATE: 3-30-64	NASA: DATE: 3-30-64
DESIGNED O.L.M. DRAWN - O.L.M. - LOONEY CHECKED	APPROVAL RECOMMENDED: CHIEF, MECH. SECTION	DRWG. NO. F&D-B-4619-M1
SCALE: AS NOTED:	DESIGN DATE: 3-25-64	
	SPEC. NO. F&D-444	

M-1

MSFC-FORM 232 (REV. DEC., 1960)

MSFC MASTER BID DISK 11-18-2013

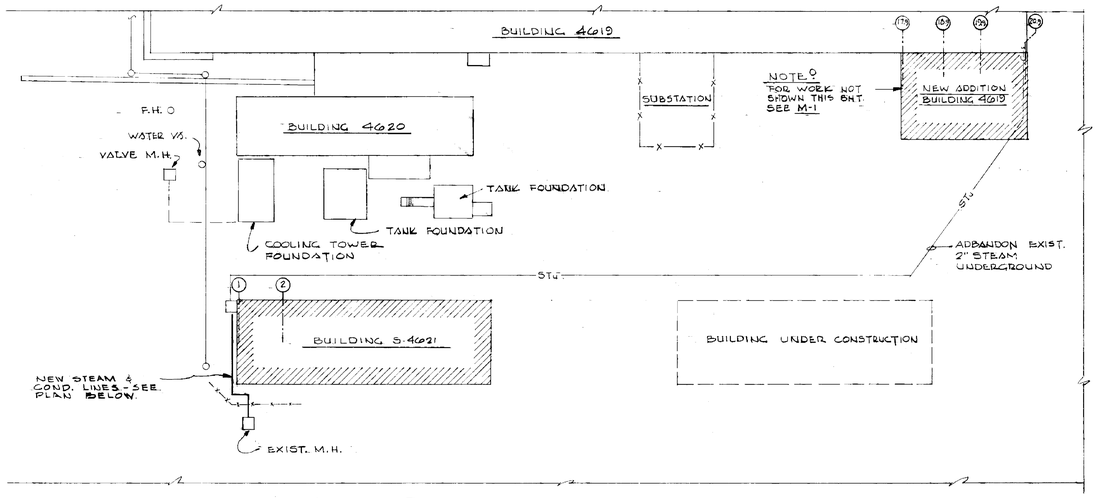

N

SITE PLAN

SCALE : 1"=30'-0"

FAN SCHEDULE								
MARK	NO. REQ'D.	C.F.M.	S.P. "H_2O	* TYPE	H.P. (APPROX.)	ELECTRICAL DATA VOLTS	PHASE	CYCLE
F-1	2	6,400	.75"	FLOOR MOUNTED	1	440	3	60

* UNIT TO BE ENCLOSED IN # 12 GA (MIN) METAL ENCLOSURE WITH 1/2 # 18 GA. WIRE MESH ON INTAKE SIDE, BELT DRIVEN.

UNIT HEATER SCHEDULE										
MARK	NO. REQ'D.	APPROX. C.F.M.	CAPACITY BTU/HR	TYPE COIL	ENT. AIR D.B.	LVG. AIR D.B.	ELECTRICAL DATA VOLTS	PHASE	CYCLE	MOTOR H.P. (APPROX.)
U.H-1	1	2,000	100,000	STEAM	55°F	102°F	115	1	60	1/6
U.H-2	2	1,600	75,000	STEAM	55°F	99°F	115	1	60	1/6

1 UNIT TO HAVE VERTICAL THROW OF 20' AND SPREAD OF 40' DIA. AT 20' THROW. STEAM PRESSURE IS 20 PSIG. UNITS TO BE "McQUAY" OR APPROVED EQUAL.

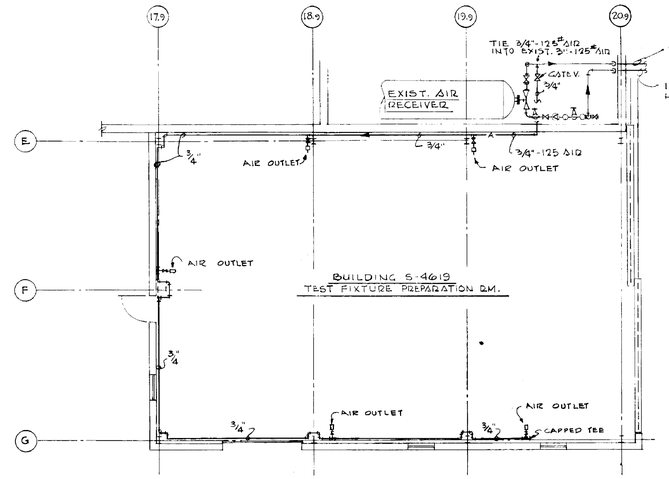

N

PIPING PLAN

SCALE : 1/8"=1'-0"

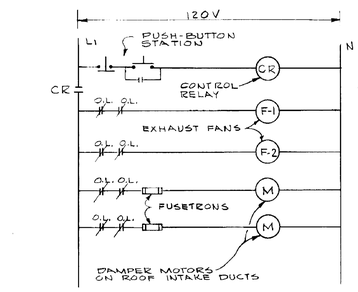

MOTOR CONTROL DIAGRAM

N.T.S.

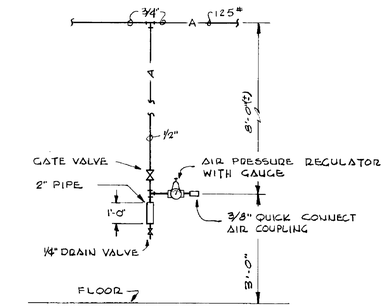

AIR OUTLET DETAIL (5 REQ'D.)

NOT TO SCALE

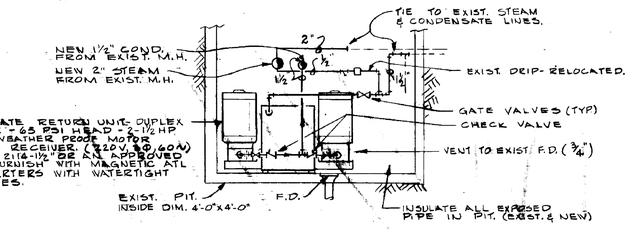

CONDENSATE RETURN UNIT DUPLEX 6000 EDR - 65 PSI HEAD - 2-1/2 HP 12 GPM - WEATHER PROOF MOTOR CAST IRON RECEIVER. 220 V, 30 (60W) "AURORA # 2114-1½" OR APPROVED EQUAL. FURNISH WITH MAGNETIC ATL MOTOR STARTERS WITH WATERTIGHT ENCLOSURES.

CONDENSATE UNIT DETAIL

N. T. S.

* NOTE
VERIFY ALL DIMENSIONS BEFORE FABRICATION OF NEW STEAM & COND. LINES

PLAN - NEW STEAM SUPPLY FOR BLDG. 4621

SCALE 1/4"=1'-0"

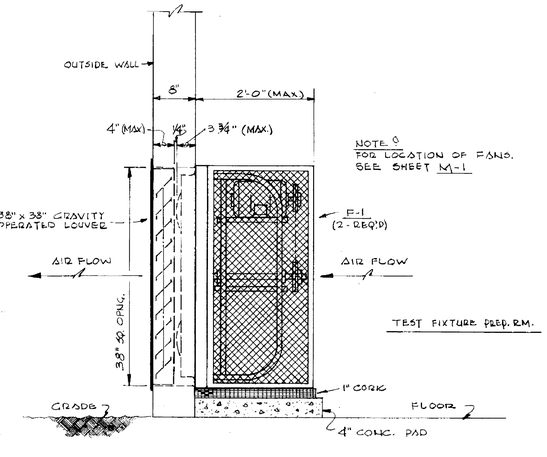

SECTION THRU FAN (TYPICAL)

NOT TO SCALE

REV.	BY	DATE		C.I. NO.	APPROVED
1	TM	3-19-64	REVISED UNIT HTR. SCHEDULE	12045-21	B

NATIONAL AERONAUTICS AND SPACE ADMINISTRATION — **M S F C** HUNTSVILLE, ALABAMA

FACILITIES AND DESIGN OFFICE

BUILDING 4619
TEST FIXTURE PREPARATION ROOM
MECHANICAL
PIPING PLANS & MISC. DETAILS

PROJECT NO. 64-18 — FILE NO. MSFC 2940

SUBMITTED: M. A. Rouse, LL PROJECT ENGINEER, AE, DATE: 3-27-64

APPROVAL RECOMMENDED: CHIEF, CONTRACT PLANS SECT. — APPROVED: S. V. Savage, CHIEF, DESIGN BRANCH — NASA DATE: 3-30-64

DESIGNED GLM, DRAWN LOONEY-GLM, CHECKED SSP EM — APPROVAL RECOMMENDED: C. Simpson, CHIEF, M.E.P. SECTION — DESIGN DATE: 3-25-64 — SPEC. NO. FED-444

SCALE: AS NOTED — DRWG. NO. F&D-B4619-M-2

APPROVED FOR SAFETY MAR 31 1964 DATE

M-2

MSFC-FORM 232 (REV. DEC., 1960)

4619

MSFC MASTER BID DISK 11-18-2013

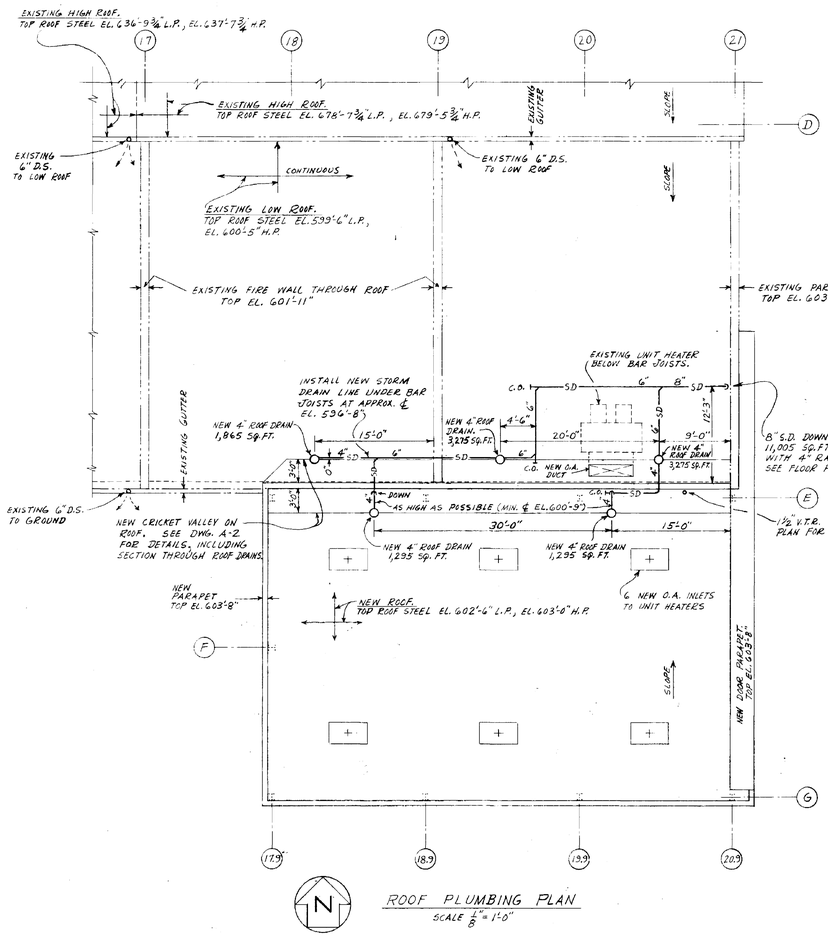

ROOF PLUMBING PLAN
SCALE 1/8" = 1'-0"

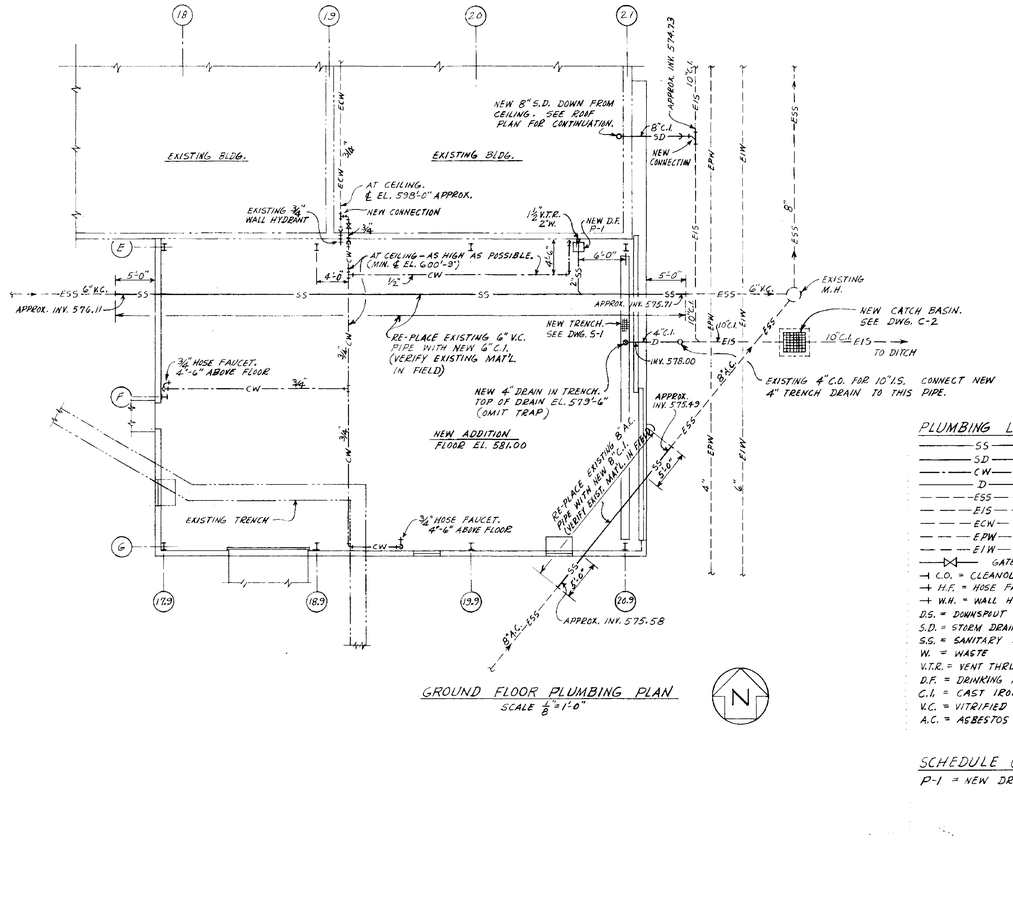

GROUND FLOOR PLUMBING PLAN
SCALE 1/8" = 1'-0"

PLUMBING LEGEND:

- SS — NEW SANITARY SEWER LINES (INCLUDES SOIL AND WASTE)
- SD — NEW STORM DRAIN LINES
- CW — NEW COLD WATER LINES (POTABLE)
- D — NEW DRAIN LINES (OTHER THAN SS OR SD)
- ESS — EXISTING SANITARY SEWER
- EIS — EXISTING INDUSTRIAL SEWER
- ECW — EXISTING COLD WATER (POTABLE)
- EPW — EXISTING POTABLE WATER
- EIW — EXISTING INDUSTRIAL WATER
- GATE VALVE
- C.O. = CLEANOUT
- H.F. = HOSE FAUCET
- W.H. = WALL HYDRANT
- D.S. = DOWNSPOUT
- S.D. = STORM DRAIN
- S.S. = SANITARY SEWER
- W. = WASTE
- V.T.R. = VENT THRU ROOF
- D.F. = DRINKING FOUNTAIN
- C.I. = CAST IRON
- V.C. = VITRIFIED CLAY
- A.C. = ASBESTOS CEMENT

SCHEDULE OF PLUMBING FIXTURES:

P-1 = NEW DRINKING FOUNTAIN (ELECTRIC AND FLOOR MOUNTED)

GENERAL NOTES:

1.- ALL ROOF DRAINS TO BE EQUIPPED WITH INTEGRAL EXPANSION JOINT.

REV.	BY	DATE		C.I. NO.	APPROVED

NATIONAL AERONAUTICS AND SPACE ADMINISTRATION — **M S F C** HUNTSVILLE, ALABAMA

FACILITIES AND DESIGN OFFICE

BUILDING 4619
TEST FIXTURE PREPARATION ROOM
PIPING
PLUMBING PLANS

PROJ. NO. 64-18	SUBMITTED: Chief, Contract Inst. Sect.	FILE NO. 2941 MSFC
SUBMITTED: M. A. Ross Ch. PROJ. ENGR. AE: DATE: 3-27-64	APPROVAL RECOMMENDED: LAB: DATE: 3-30-64	APPROVED: R. D. Ramey Jr. CHIEF, DESIGN BRANCH NASA DATE: 3-30-64
DESIGNED C.B.S. DRAWN C.B.S. CHECKED J.S.P., Jr.	APPROVAL RECOMMENDED: C. Swanson CHIEF, MECH. SECTION DESIGN DATE: 3-25-64	DRWG. NO. F&D-B-4619-P1
SCALE: AS NOTED	SPEC. NO. F&D-444	

RECEIVED I&S SAFETY MAR 25 1964 DATE

P-1

MSFC-FORM 232 (REV. DEC., 1960)

4619

MSFC MASTER BID DISK 11-18-2013

NOTICE - WHEN GOVERNMENT DRAWINGS, SPECIFICATIONS OR OTHER DATA ARE USED FOR ANY PURPOSE OTHER THAN IN CONNECTION WITH A DEFINITELY RELATED GOVERNMENT PROCUREMENT OPERATION, THE UNITED STATES GOVERNMENT THEREBY INCURS NO RESPONSIBILITY NOR ANY OBLIGATION WHATSOEVER; AND THE FACT THAT THE GOVERNMENT MAY HAVE FORMULATED, FURNISHED, OR IN ANY WAY SUPPLIED THE SAID DRAWINGS, SPECIFICATIONS OR OTHER DATA IS NOT TO BE REGARDED BY IMPLICATION OR OTHERWISE AS IN ANY MANNER LICENSING THE HOLDER OR ANY OTHER PERSON OR CORPORATION, OR CONVEYING ANY RIGHTS OR PERMISSION TO MANUFACTURE, USE, OR SELL ANY PATENTED INVENTION THAT MAY IN ANY WAY BE RELATED THERETO.

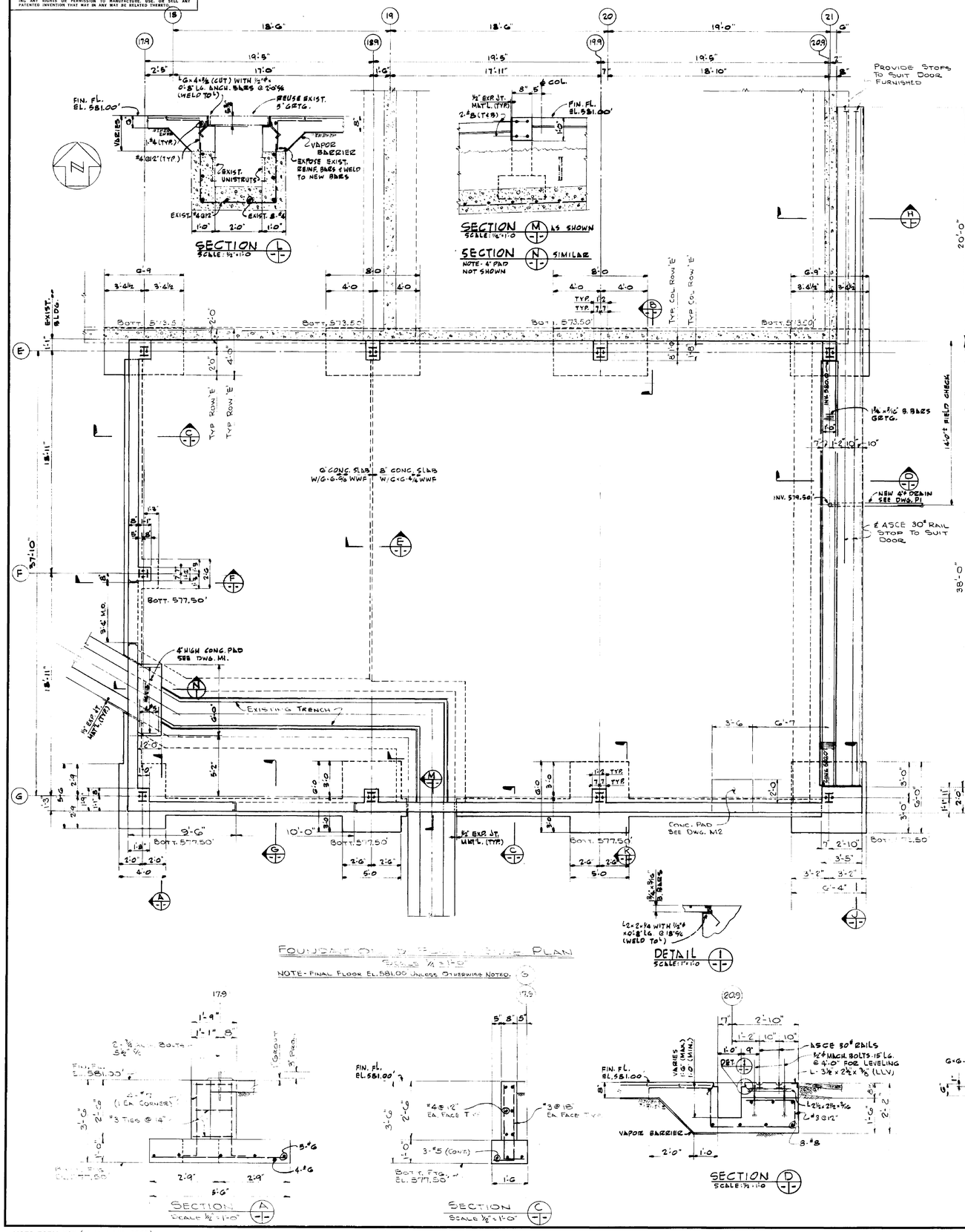

GENERAL NOTES:

A- APPLICABLE CODES, STANDARDS AND SPECIFICATIONS

1. AMERICAN CONCRETE INSTITUTE
   (a) MANUEL OF STANDARD PRACTICE FOR DETAILING CONCRETE STRUCTURES (ACI-315).
   (b) BUILDING CODE REQUIREMENTS FOR REINFORCED CONCRETE (ACI-318).
2. AMERICAN INSTITUTE OF STEEL CONSTRUCTION
   (a) SPECIFICATION FOR DESIGN, FABRICATION AND ERECTION OF STEEL FOR BUILDING (APRIL 17, 1962).
   (b) SPECIFICATIONS FOR STRUCTURAL JOINTS USING ASTM A325 BOLTS.
   (c) CODE OF STANDARD PRATICE FOR STEEL BUILDINGS AND BRIDGES.
3. AMERICAN WELDING SOCIETY STANDARDS, D1.0.

B- DESIGN LOADS

1. DEAD LOADS.
2. ROOF LL: 20 psf.
3. CRANE (10 TON)
4. FLOOR LOAD - AASHO-H20

C- DESIGN STRESS.

1. STEEL - AST.M-A-36 - fy = 36,000.
2. CONCRETE f'c = 3,000 psi @ 28 DAYS.
3. REINFORCING STEEL.
   (a) BARS - INTERMEDIATE GRADE AST.M-A15 fy = 50,000.
   (b) MESH - AST.M.-A185 fy = 36,000.
   (c) DEFORMATIONS SHALL CONFORM TO AST.M. 305.
4. SOIL - ALLOWABLE BEARING PRESSURE = 3,000 psf.

D- GENERAL

1. THE CONTRACTOR SHALL VERIFY ALL EXISTING CONDITIONS AND DIMENSIONS PRIOR TO FABRICATION OF STEEL.
2. THE CONTRACTOR SHALL MAKE NECESSARY ADJUSTMENTS OF STEEL TO SUIT EQUIPMENT FURNISHED.
3. LAP REINFORCING (24) DIAMETERS (1'-6" MINIMUM) AT SPLICE POINTS.

REV.	BY	DATE		C. I. NO.	APPROVED

NATIONAL AERONAUTICS AND SPACE ADMINISTRATION — M S F C — HUNTSVILLE, ALABAMA

FACILITIES AND DESIGN OFFICE

BLDG. 4619

TEST FIXTURE PREPARATION ROOM STRUCTURAL

FDN. & FL. SLAB PLAN, SECTIONS & DETAILS

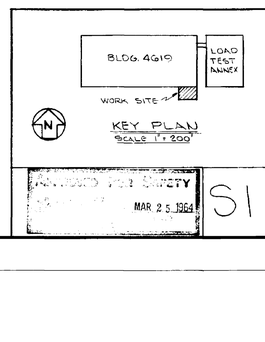

RECOMMENDED FOR SAFETY — MAR 25 1964 — S1

PROJ. NO. 64-18		SUBMITTED: CHIEF, CONTRACT DESIGN SECT.	FILE NO. MSFC 2936
SUBMITTED: RES. PROJ. ENGR.		APPROVAL RECOMMENDED:	APPROVED: CHIEF DESIGN BRANCH
AE.	DATE: 2-26-64	LAB.	DATE: 3-30-64
DESIGNED A.R.G. DRAWN S.C. BRAUNER & J.W. BAUGH CHECKED B.S.S.		APPROVAL RECOMMENDED: CHIEF, STRUCTURAL SECTION	DRWG. NO. F&D-B-4619-S1
SCALE: AS NOTED		DESIGN DATE: 3-30-64	
		SPEC. NO. F&D-444	

MSFC-FORM 232 (REV. APRIL 1962)

4619

MSFC MASTER BID DISK 11-18-2013

NOTICE.—WHEN GOVERNMENT DRAWINGS, SPECIFICATIONS, OR OTHER DATA ARE USED FOR ANY PURPOSE OTHER THAN IN CONNECTION WITH A DEFINITELY RELATED GOVERNMENT PROCUREMENT OPERATION, THE UNITED STATES GOVERNMENT THEREBY INCURS NO RESPONSIBILITY NOR ANY OBLIGATION WHATSOEVER; AND THE FACT THAT THE GOVERNMENT MAY HAVE FORMULATED, FURNISHED, OR IN ANY WAY SUPPLIED THE SAID DRAWINGS, SPECIFICATIONS OR OTHER DATA IS NOT TO BE REGARDED BY IMPLICATION OR OTHERWISE AS IN ANY MANNER LICENSING THE HOLDER OR ANY OTHER PERSON OR CORPORATION, OR CONVEYING ANY RIGHTS OR PERMISSION TO MANUFACTURE, USE OR SELL ANY PATENTED INVENTION THAT MAY IN ANY WAY BE RELATED THERETO.

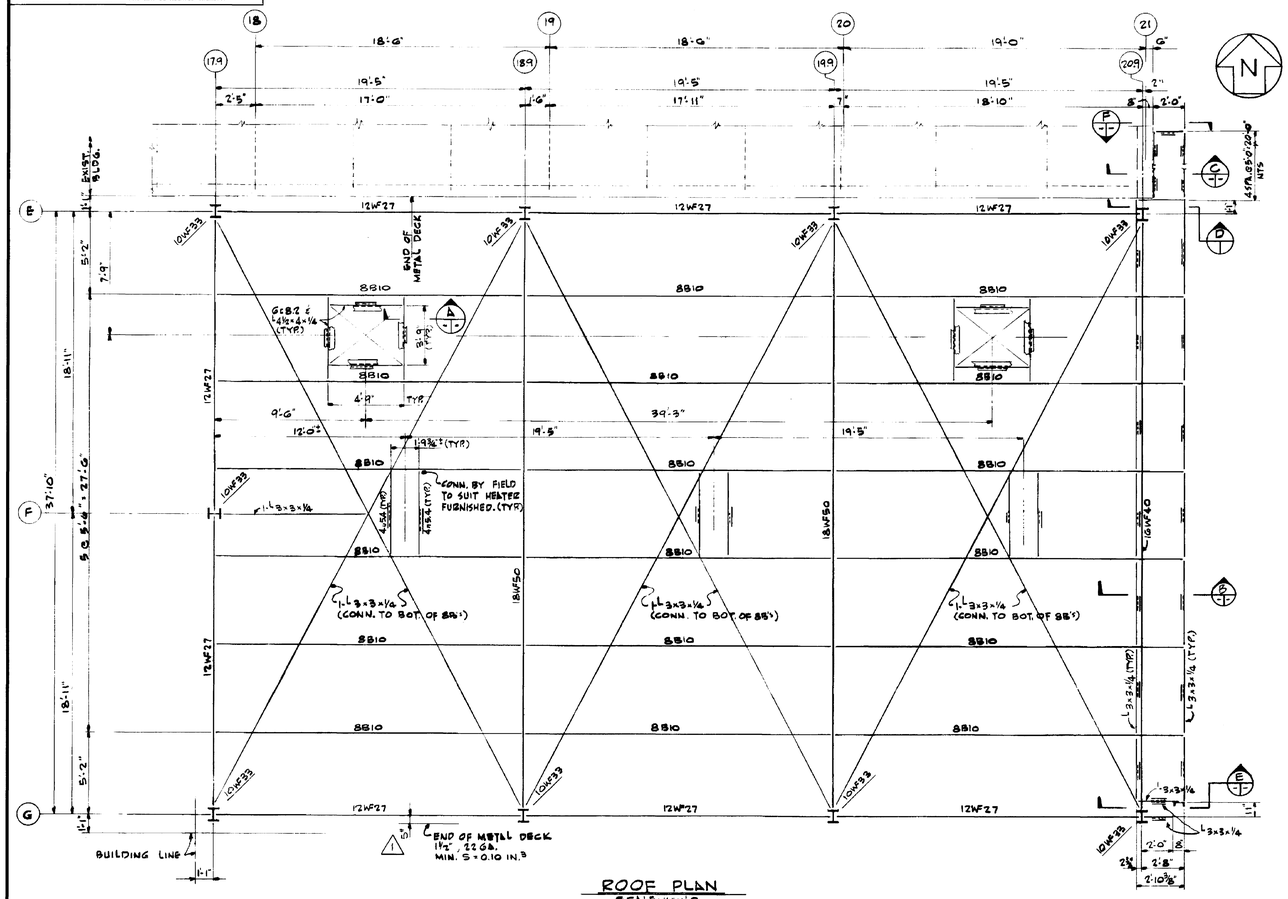

ROOF PLAN
SCALE: 1/16"=1'-0"

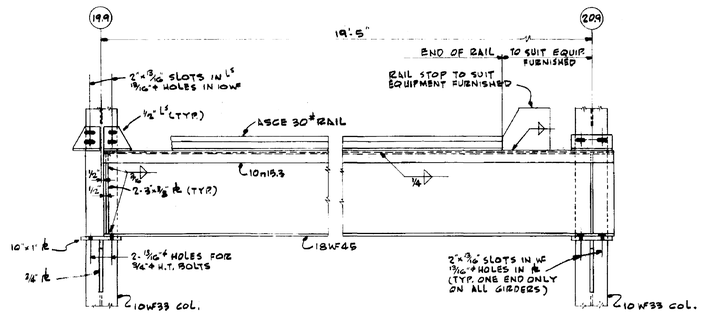

CRANE GIRDER DETAILS
SCALE: NONE

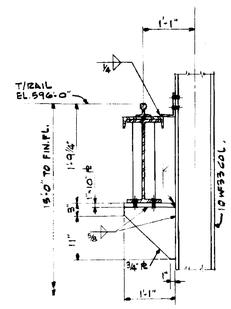

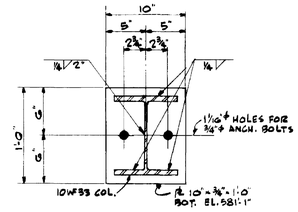

TYP. COL. BASE DETAIL
SCALE: 1"=1'-0

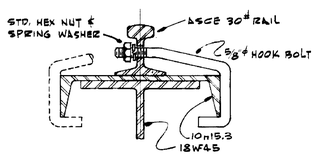

NOTE
SPACE HOOK BOLTS 2'-0" ON CENTERS OF PAIRS, 3" BETWEEN BOLTS OF A PAIR.

TYP. RAIL FASTENING DET.
SCALE: 3"=1'-0

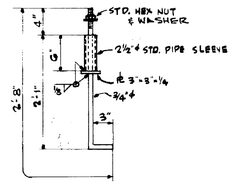

ANCHOR BOLT DETAIL
SCALE: NONE

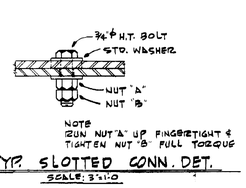

NOTE
RUN NUT "A" UP FINGERTIGHT & TIGHTEN NUT "B" FULL TORQUE

TYP. SLOTTED CONN. DET.
SCALE: 3"=1'-0

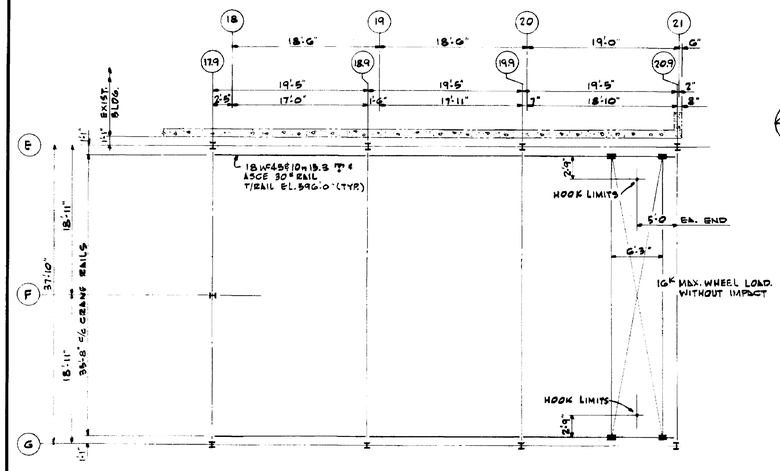

CRANE GIRDER PLAN
SCALE: 1/8"=1'-0

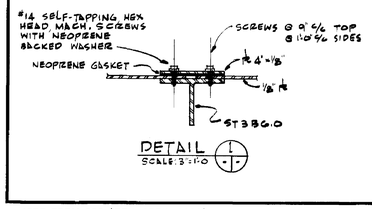

DETAIL 1
SCALE: 3"=1'-0

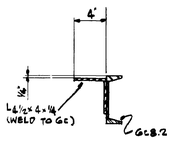

SECTION A
SCALE: 1 1/2"=1'-0

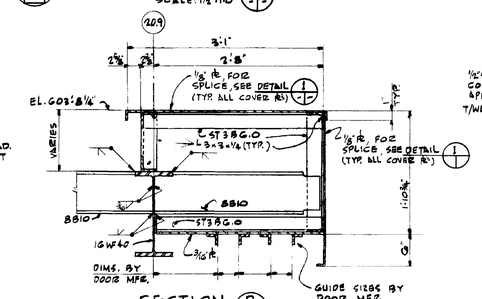

SECTION B
SCALE: 1"=1'-0

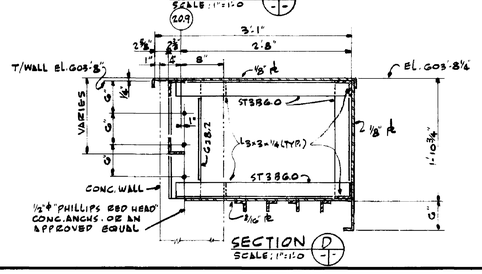

SECTION D
SCALE: 1"=1'-0

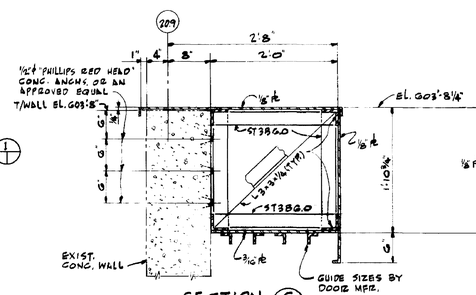

SECTION C
SCALE: 1"=1'-0

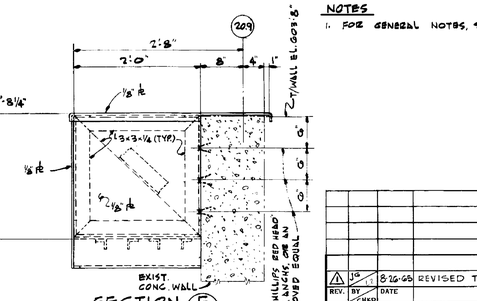

SECTION F
SCALE: 1"=1'-0

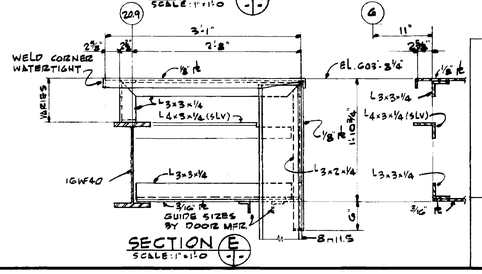

SECTION E
SCALE: 1"=1'-0

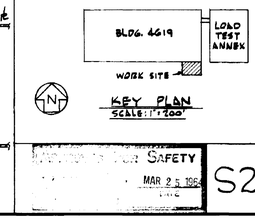

KEY PLAN
SCALE: 1"=200'

NOTES
1. FOR GENERAL NOTES, SEE DWG S1.

REV.	BY	DATE		C. I. NO.	APPROVED
1	GHEDI	8-26-66	REVISED TO "AS BUILT" CONDITIONS		

NATIONAL AERONAUTICS AND SPACE ADMINISTRATION
M S F C
HUNTSVILLE, ALABAMA

FACILITIES AND DESIGN OFFICE

BLDG. 4619
TEST FIXTURE PREPARATION ROOM
STRUCTURAL
ROOF & CRANE GIRDER PLANS, SECTIONS & DETS.

PROJ. NO. G4-18	SUBMITTED: CHIEF, CONTRACT DESIGN SECT.	FILE NO. 2937 M S F C
SUBMITTED: M. A. LOWE, SES, PROJ. ENGR.	APPROVAL RECOMMENDED:	APPROVED: R. D. Ramsey, Jr. CHIEF, DESIGN BRANCH
A.E. DATE: -26-66	LAB. DATE:	NASA DATE: 3-30-66
DESIGNED A.R.S. DRAWN J.W. BAUGH CHECKED B.S.S.	APPROVAL RECOMMENDED: CHIEF, STRUCTURAL SECTION	DRWG. NO.
SCALE: AS NOTED	DESIGN DATE: 3-30-64	F&D-B-4619-S2
	SPEC. NO. F&D-444	

Safety MAR 25 1966

S2

MSFC-FORM 232 (REV. APRIL 1962)

4619

MSFC MASTER BID DISK 11-18-2013

NOTICE.- WHEN GOVERNMENT DRAWINGS, SPECIFICATIONS, OR OTHER DATA ARE USED FOR ANY PURPOSE OTHER THAN IN CONNECTION WITH A DEFINITELY RELATED GOVERNMENT PROCUREMENT OPERATION, THE UNITED STATES GOVERNMENT THEREBY INCURS NO RESPONSIBILITY NOR ANY OBLIGATION WHATSOEVER; AND THE FACT THAT THE GOVERNMENT MAY HAVE FORMULATED, FURNISHED, OR IN ANY WAY SUPPLIED THE SAID DRAWINGS, SPECIFICATIONS OR OTHER DATA IS NOT TO BE REGARDED BY IMPLICATION OR OTHERWISE IN ANY MANNER LICENSING THE HOLDER OR ANY OTHER PERSON OR CORPORATION, OR CONVEYING ANY RIGHTS OR PERMISSION TO MANUFACTURE, USE, OR SELL ANY PATENTED INVENTION THAT MAY IN ANY WAY BE RELATED THERETO.

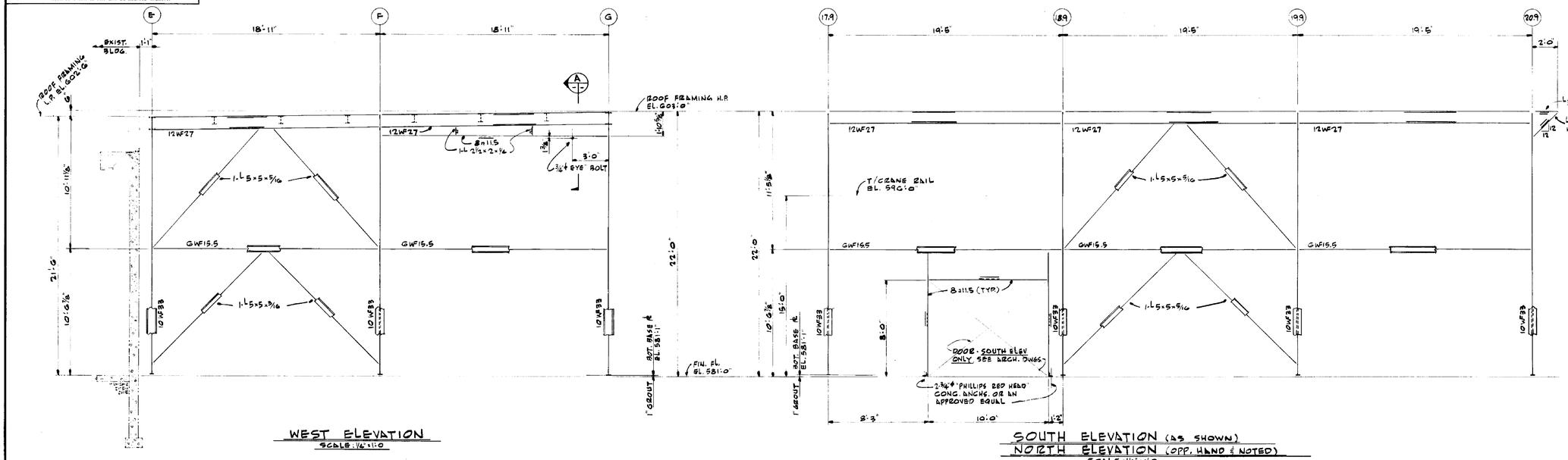

WEST ELEVATION
SCALE: 1/4"=1'-0"

SOUTH ELEVATION (AS SHOWN)
NORTH ELEVATION (OPP. HAND & NOTED)
SCALE: 1/4"=1'-0"

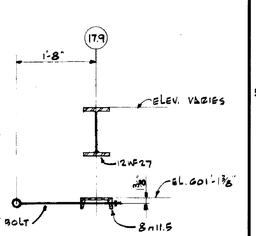

SECTION
SCALE: 3/4"=1'-0"

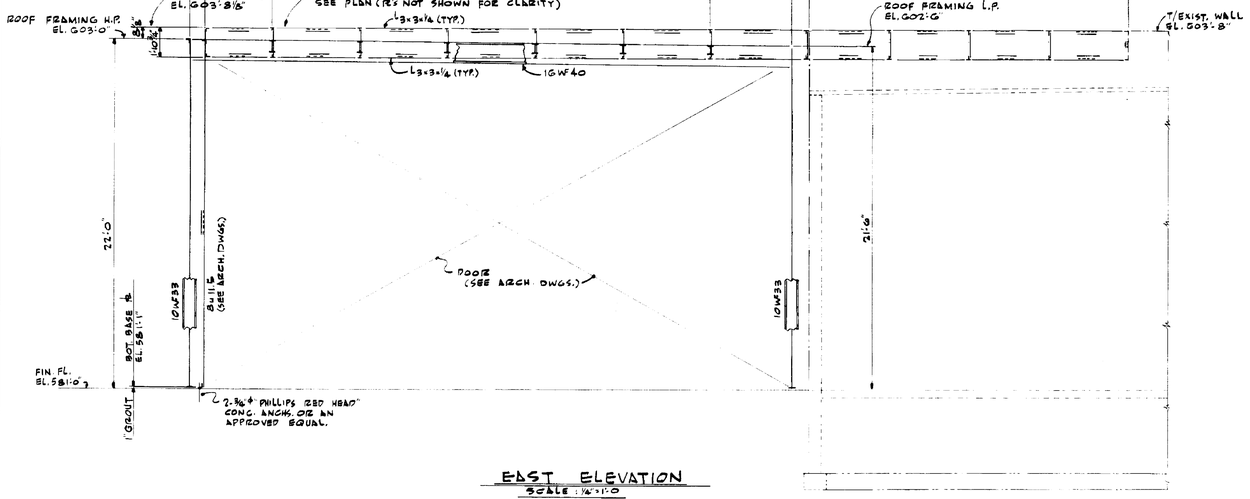

EAST ELEVATION
SCALE: 1/4"=1'-0"

NOTES
1. FOR GENERAL NOTES, SEE DWG S1.
2. MILL COLUMNS AT BASE PL's.

REV.	BY	DATE	C. I. NO.	APPROVED

NATIONAL AERONAUTICS AND SPACE ADMINISTRATION — M S F C, HUNTSVILLE, ALABAMA

FACILITIES AND DESIGN OFFICE

BLDG. 4619
TEST FIXTURE PREPARATION ROOM
STRUCTURAL
ELEVATIONS, SECTIONS & DETAILS

PROJ. No. G4-18
SUBMITTED: W. H. Lowe, ZBS. PROJ. ENGR. AE. DATE: 2-24-64
SUBMITTED: CHIEF, CONTRACT DESIGN SECT.
APPROVAL RECOMMENDED: LAB. DATE:
APPROVAL RECOMMENDED: CHIEF, STRUCTURAL SECTION
DESIGNED A.P.S. DRAWN J.W. BRAUGH CHECKED B.S.S.
SCALE: AS NOTED
DESIGN DATE: 3-30-64
SPEC. NO. F&D-444
FILE NO. 2938 MSFC
APPROVED: R. O. Ramsey Jr. CHIEF, DESIGN BRANCH
NASA DATE: 3-30-64
DRWG. NO. F&D-B-4619-S3

APPROVED FOR SAFETY MAR 25 1964 LEWIS

S3

MSFC-FORM 232 (REV. APRIL 1962)

4619

MSFC MASTER BID DISK 11-18-2013

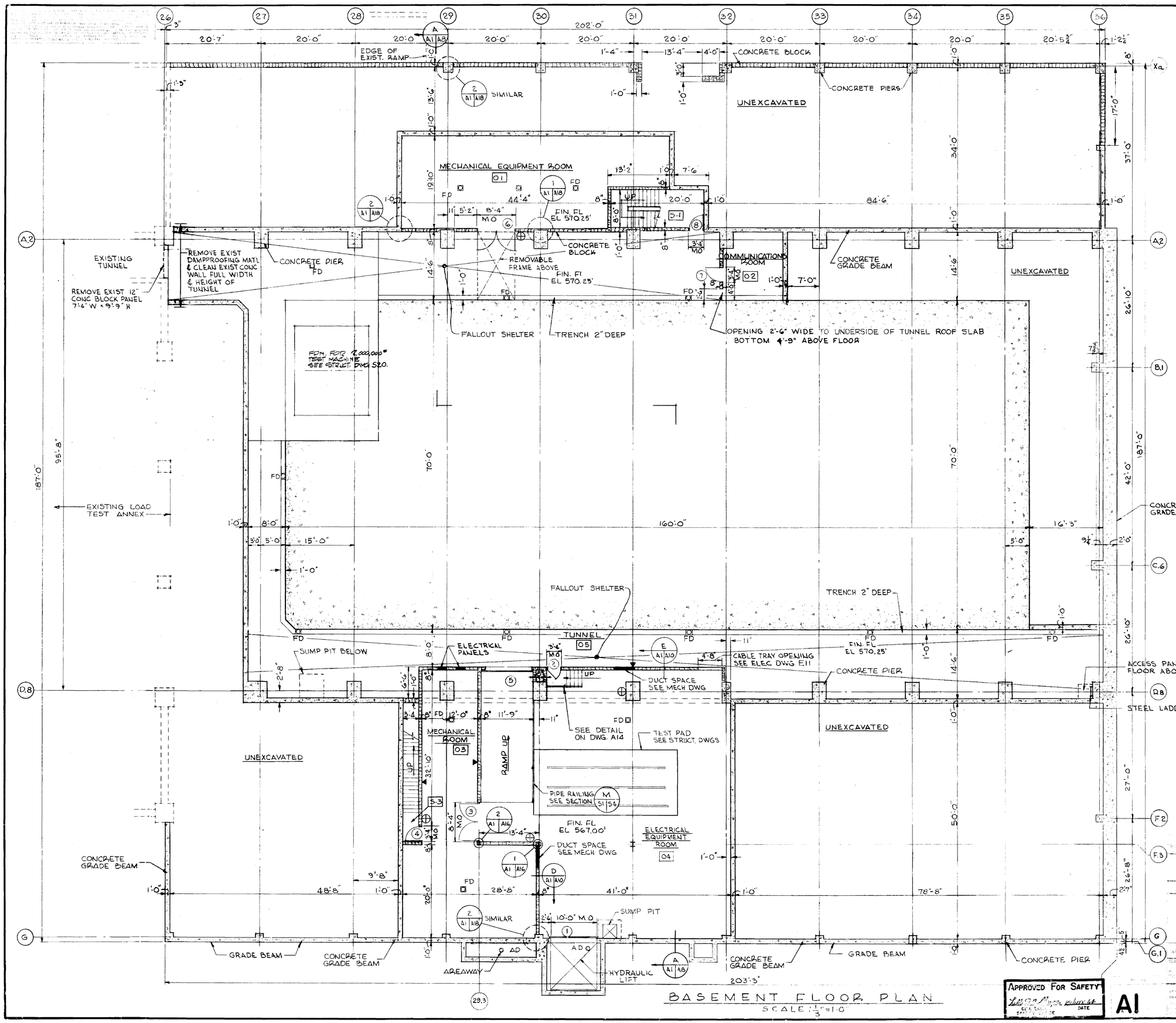

ARCHITECTURAL SYMBOLS & LEGEND

- EARTH
- CONCRETE
- CEMENT BLOCK
- INSULATION
- WOOD
- METAL
- PLASTER
- CONTROL JOINT
- FIRE EXTINGUISHER (#10 CO_2)

GENERAL NOTES FOR ALL DRAWINGS

1. UNLESS OTHERWISE SHOWN OR NOTED ALL MASONRY PARTITIONS SHALL EXTEND TO THE UNDERSIDE OF FLOOR OR ROOF
2. FOR ADDITIONAL BASEMENT FLOOR DATA SEE DWG. S1.

NATIONAL AERONAUTICS AND SPACE ADMINISTRATION — M S F C — HUNTSVILLE ALABAMA

SAUNDERS & THOMAS INC. POTTSTOWN PA. WASH. D.C. HOUSTON, TEX.

EXTENSION OF LOAD TEST ANNEX (BUILDING NO. 4619)

BASEMENT FLOOR PLAN

CONTRACT NO. NAS8-12014		JOB NO. 8972
APPROVED W.Saunders, P.E.	APPROVED R.L.Barrett	Robert D. Ramsey, Jr.
DATE 12 MAY 64	DATE 6/15/64	DATE 6-16-64
DESIGNED J.P.H. DRAWN R.M. CHECKED P.L.M.	PREPARED RECOMMENDED ARCHITECTURAL	DRWG. NO. F8D-C-4619-A1
SCALE 1/8" = 1'-0"	DATE 6-5-63 SPEC. S.D. 420	

APPROVED FOR SAFETY — DATE — A1

4619

MSFC MASTER BID DISK 11-18-2013

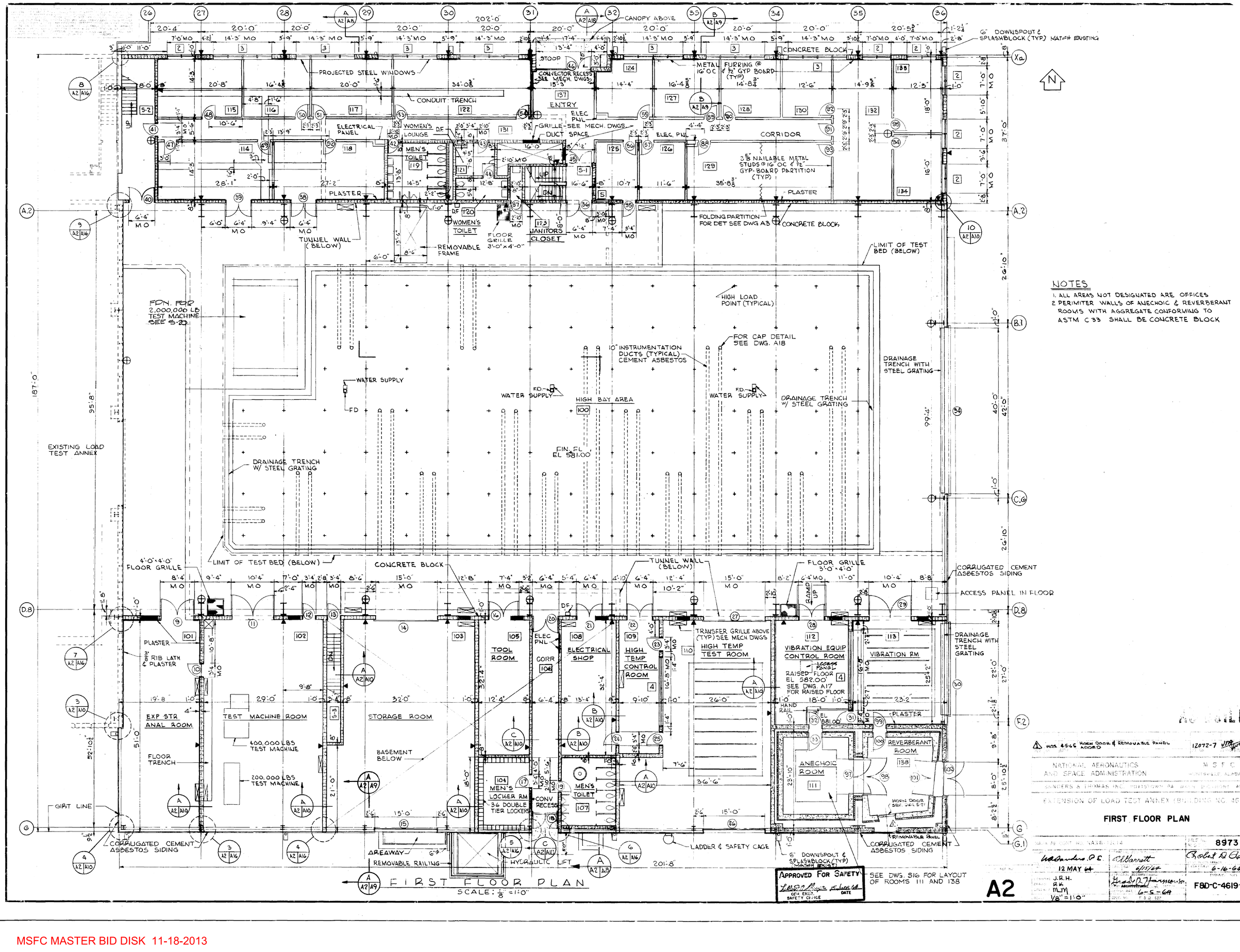

MSFC MASTER BID DISK 11-18-2013

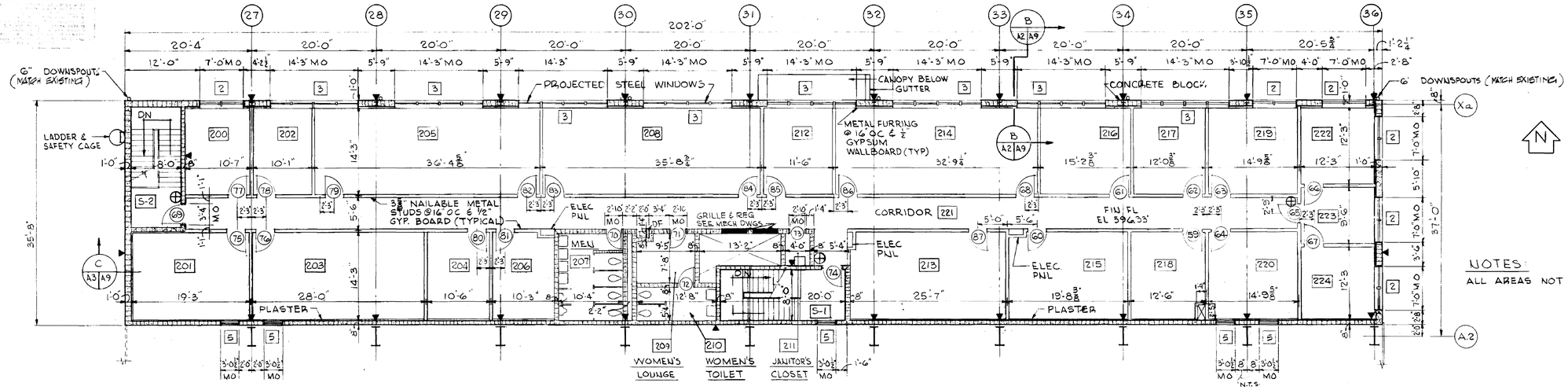

SECOND FLOOR PLAN

SCALE : ⅛"=1'-0"

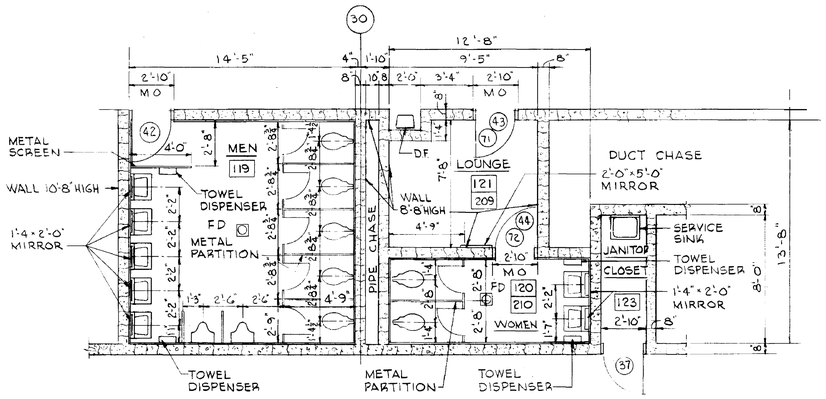

OFFICE AREA TOILET ROOM PLAN

SCALE ¼"=1'-0"

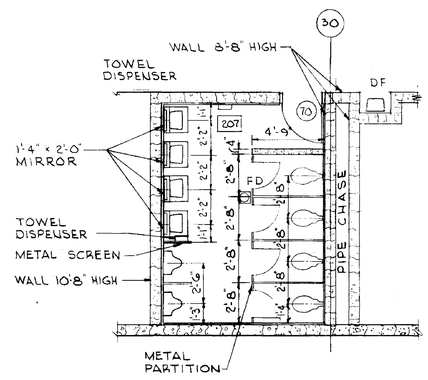

MEN'S TOILET ROOM 207 PLAN

SCALE ¼"=1'-0"

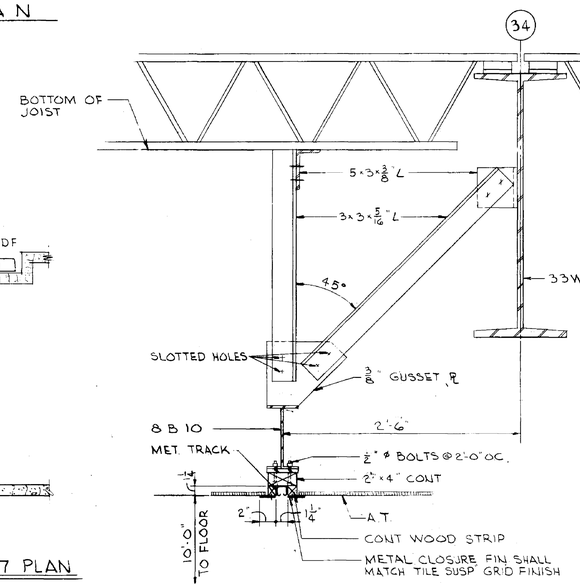

HEAD AT FOLDING DOOR

SCALE: 1½"=1'-0"

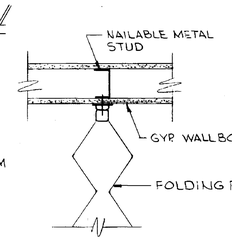

JAMB AT GYPSUM BOARD PARTITION

SCALE: 1½"=1'-0"

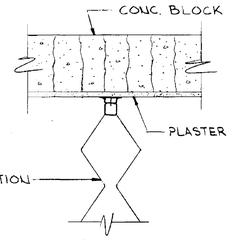

JAMB AT CONCRETE BLOCK PARTITION

SCALE: 1½"=1'-0"

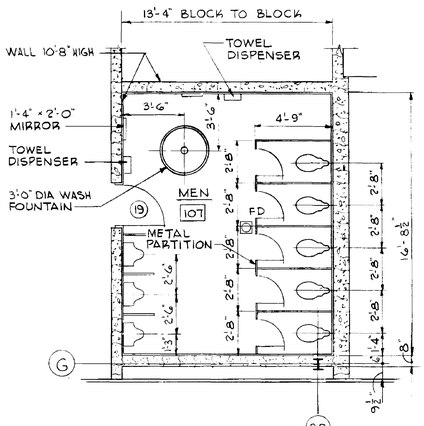

MEN'S TOILET ROOM 107 PLAN

SCALE ¼"=1'-0"

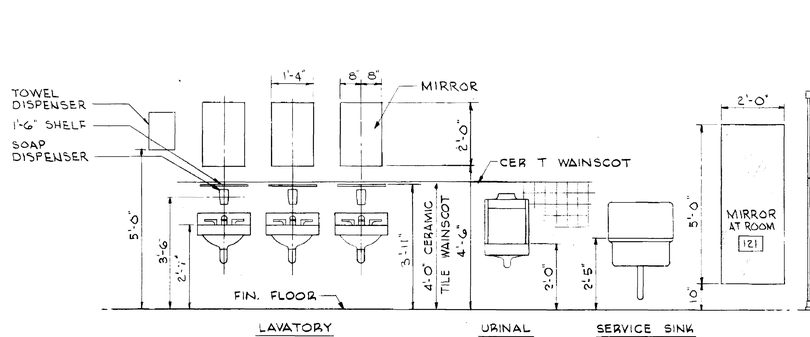

TYPICAL FIXTURE ELEVATIONS

SCALE ½"=1'-0"

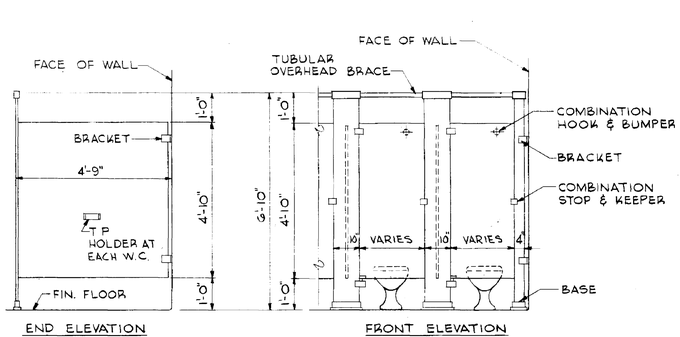

METAL TOILET PARTITION DETAIL

SCALE ½"=1'-0"

APPROVED FOR SAFETY
GEN. ENGR. SAFETY OFFICE
15 JUNE 64 DATE

A3

NATIONAL AERONAUTICS AND SPACE ADMINISTRATION — M S F C
REVISIONS & THOMAS, INC. — EXTENSION OF LOAD TEST ANNEX (BUILDING NO. 4619)

SECOND FLOOR PLAN & TOILET DETAILS

		8974
W.A. Sanders, P.E.	R.A. Barrett 6/15/64	Robert D. Ramsey 6-16-64
12 MAY 64	J.R.H. R.K. M.M.	Grady D. Harmon 6-5-64 ARCHITECTURAL
1" = 1'-0"		F&D-C-4619-A3

4619

MSFC MASTER BID DISK 11-18-2013

WHEN GOVERNMENT DRAWINGS, SPECIFICATIONS, OR OTHER DATA ARE USED FOR ANY PURPOSE OTHER THAN IN CONNECTION WITH A DEFINITELY RELATED GOVERNMENT PROCUREMENT OPERATION, THE UNITED STATES GOVERNMENT INCURS NO RESPONSIBILITY WHATSOEVER; AND THE FACT THAT THE GOVERNMENT MAY HAVE FORMULATED, FURNISHED, OR IN ANY WAY SUPPLIED THE SAID DRAWINGS, SPECIFICATIONS, OR OTHER DATA IS NOT TO BE REGARDED BY IMPLICATION OR OTHERWISE AS IN ANY MANNER LICENSING THE HOLDER OR ANY OTHER PERSON OR CORPORATION, OR CONVEYING ANY RIGHTS OR PERMISSION TO MANUFACTURE, USE, OR SELL ANY PATENTED INVENTION THAT MAY IN ANY WAY BE RELATED THERETO.

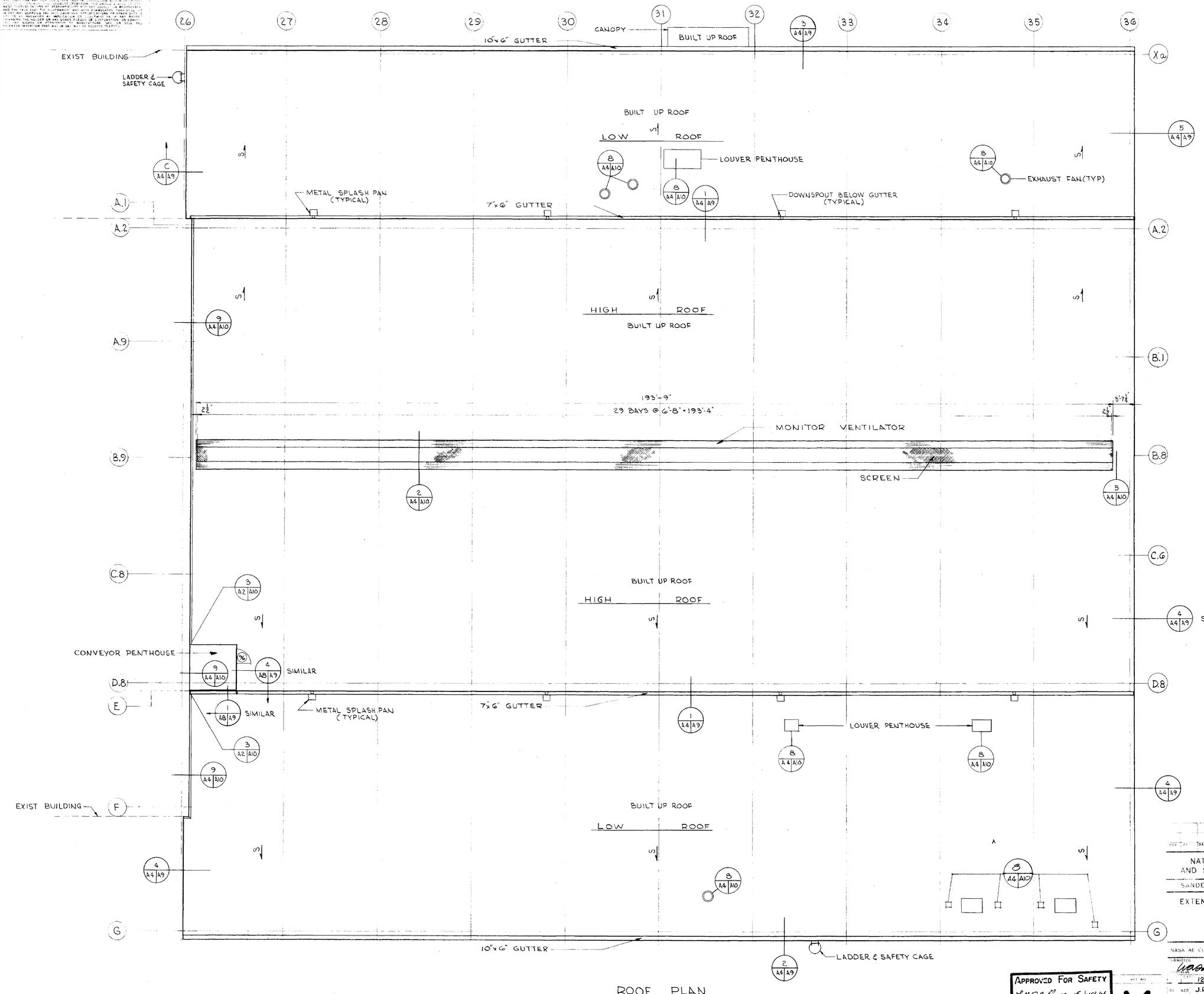

ROOF PLAN
SCALE: 1/8" = 1'-0"

NOTES

1. JUNCTURE OF NEW AND EXISTING STRUCTURES SHALL BE SEALED WEATHERTITE.
2. AT ALL INTERSECTIONS AND ENDS OF FLASHING WEATHERTITE CLOSURES SHALL BE PROVIDED.

AS BUILT

REV	BY	DATE	CL NO	APPROVED

NATIONAL AERONAUTICS AND SPACE ADMINISTRATION — M S F C — HUNTSVILLE, ALABAMA

SANDERS & THOMAS INC POTTSTOWN PA WASH D.C.-MONT., ALA.

EXTENSION C LOAD TEST ANNEX (BUILDING NO. 4619)

ROOF PLAN

APPROVED FOR SAFETY
L.M.S.D. Engr. 15 DEC 1964
DEIL ENGR. SAFETY OFFICE — DATE

NASA AE CONT. NO.	NAS-12014
SUBMITTED	W.A. Sanders P.E.
DATE	12 MAY 64
DR. NO.	J.R.H. R.D. M.L.M.
SCALE	1/8" = 1'-0"
APPROVAL RECOMMENDED	R.V. Garrett
A&E DATE	6/10/64
APPROVAL RECOMMENDED	Fred D. Harmon
ARCHITECTURAL	
SPEC. NO.	P&D 433
NASA DATE	6-16-64
DRWG. NO.	F8D-C-4619-A4
FILE NO.	8975
CHIEF DESIGN BRANCH	Robert D. Ramsay

A4

4619

MSFC MASTER BID DISK 11-18-2013

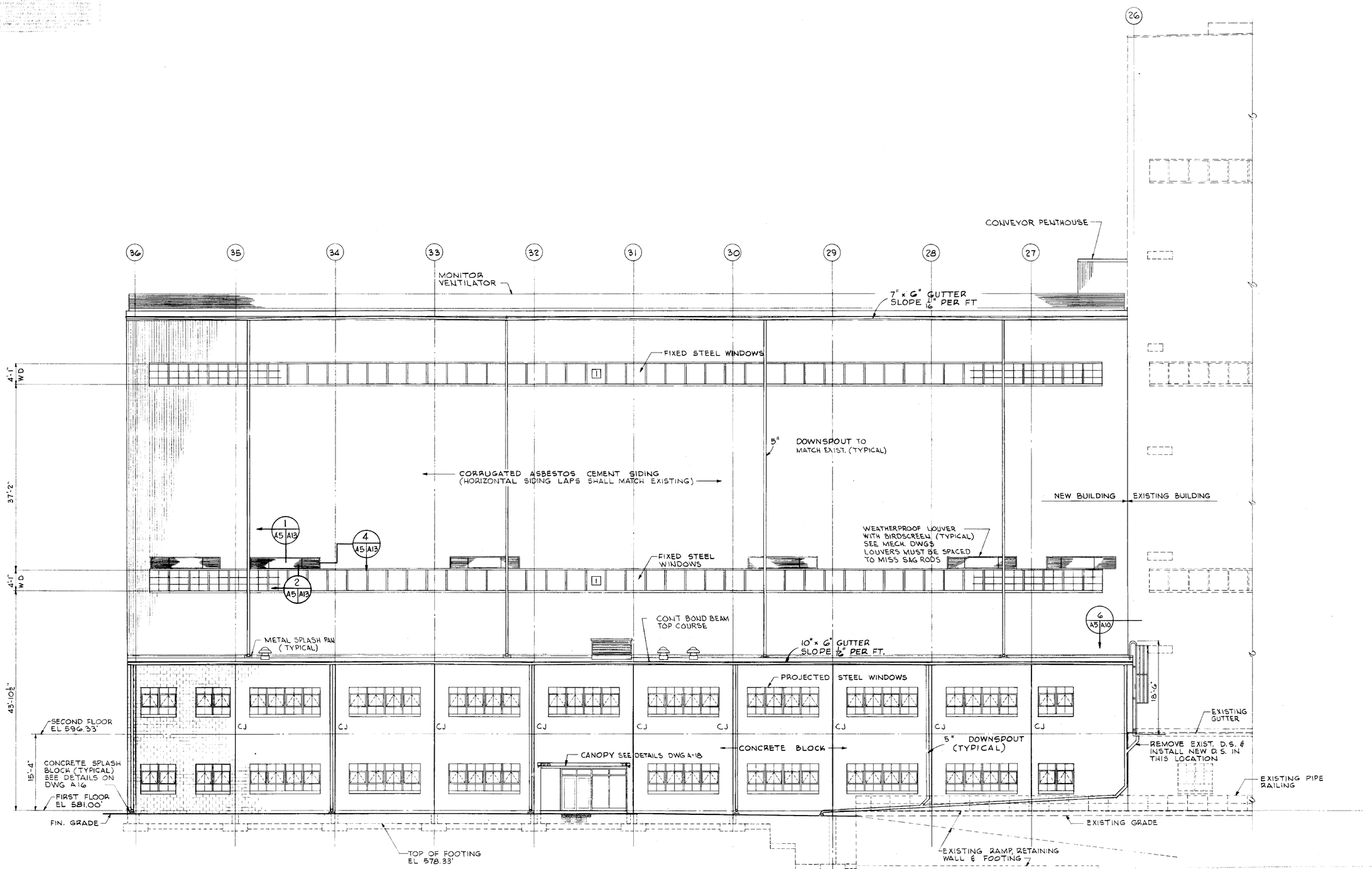

NORTH ELEVATION

SCALE 1/8"=1'-0"

AS BUILT

NATIONAL AERONAUTICS AND SPACE ADMINISTRATION — M S F C — HUNTSVILLE ALABAMA

SANDERS & THOMAS INC. POTTSVILLE PENNSYLVANIA — DESIGNED ALA

EXTENSION OF LOAD TEST A NEX (BUILDING NO 4619)

NORTH ELEVATION

NASA AE CONT NO NAS8 12011

W.A. Sanders P.E. 12 MAY 64	R.S. Harrett 6/10/64		8976
J.R.H. J.H. M.L.M. 1/8" = 1'-0"	Fred D. Harmon for ARCHITECTURAL 6-5-64		Robert D. Ramsey Jr. 6-16-64
		A5	DRWG. NO. F&D-C-4619-A5

APPROVED FOR SAFETY
GEN. ENGR. SAFETY OFFICE
DATE 15 June 64

4619

MSFC MASTER BID DISK 11-18-2013

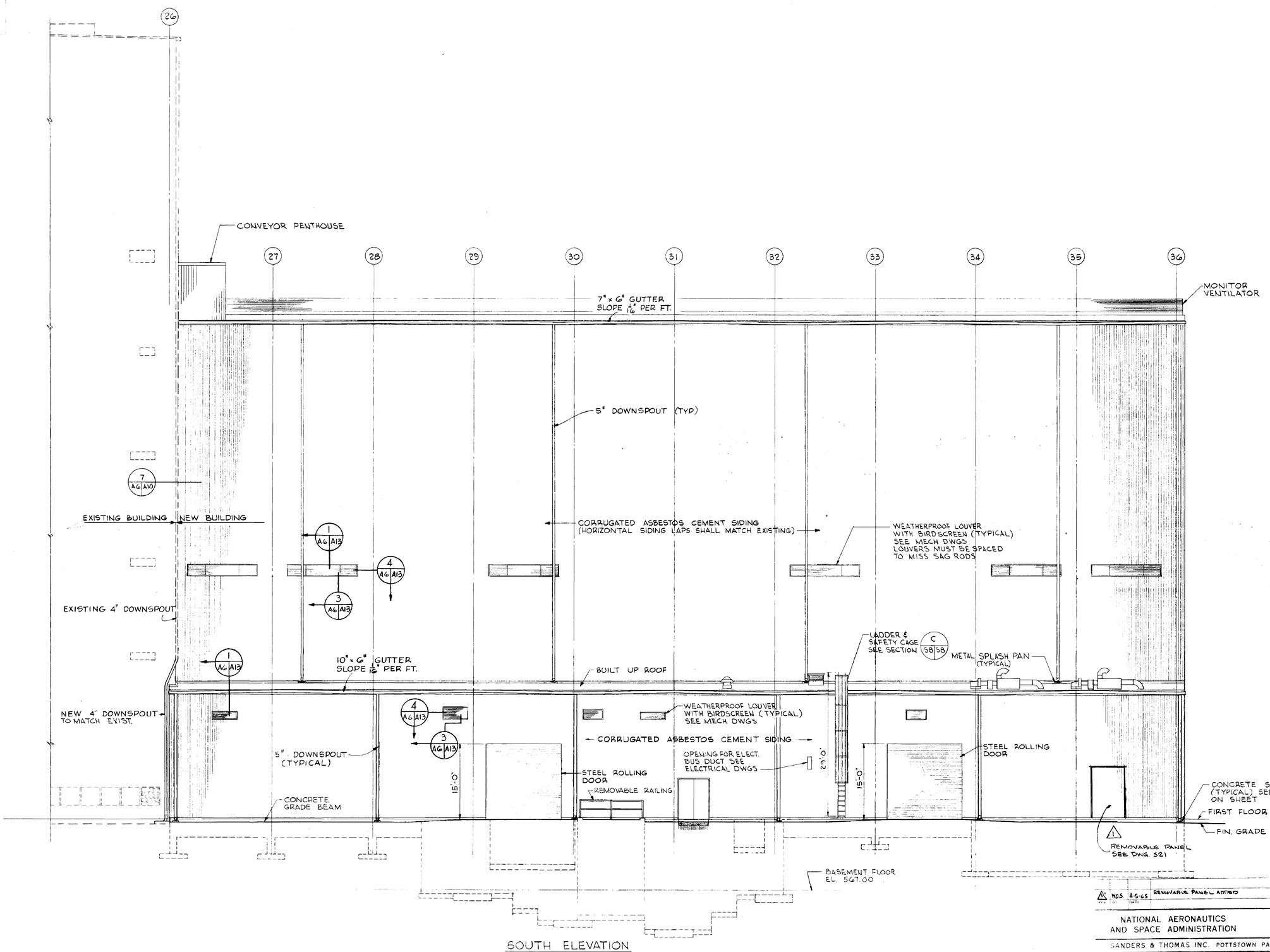

SOUTH ELEVATION

SCALE 1/8"=1'-0"

NO.	BY	DATE	
1		4-5-65	REMOVABLE PANEL ADDED

12072-7 CT. NO. — APPROVED

NATIONAL AERONAUTICS AND SPACE ADMINISTRATION — M S F C HUNTSVILLE, ALABAMA

SANDERS & THOMAS INC. POTTSTOWN PA. - ASH., D.C. - MONT. ALA.

EXTENSION OF LOAD TEST ANNEX (JILDING NO. 4619)

SOUTH ELEVATION

NASA AE CONT. NO. NAS8-12014

DESIGNED: Sanders & Thomas P.C.
DRAWN: J.R.H.
CHECKED: J.H.
SCALE: 1/8"=1'-0"
DATE: 12 MAY 64

APPROVAL RECOMMENDED: R.S. Harrell — LAB. DATE: 6/15/64
APPROVAL RECOMMENDED: Grady D. Harmon — CHIEF ARCHITECTURAL SECTION — DESIGN DATE: 6-5-64
SPEC. NO. F.S.D. 433

APPROVED: Robert D. Compton — CHIEF, DESIGN BRANCH, NASA — DATE: 6-16-64

FILE NO. M S F C 8977

DRWG. NO. F8D-C-4619-A6

APPROVED FOR SAFETY — Leroy Mayo — CIV. ENGR. SAFETY OFFICE — DATE

SHT. NO. A6

4619

MSFC MASTER BID DISK 11-18-2013

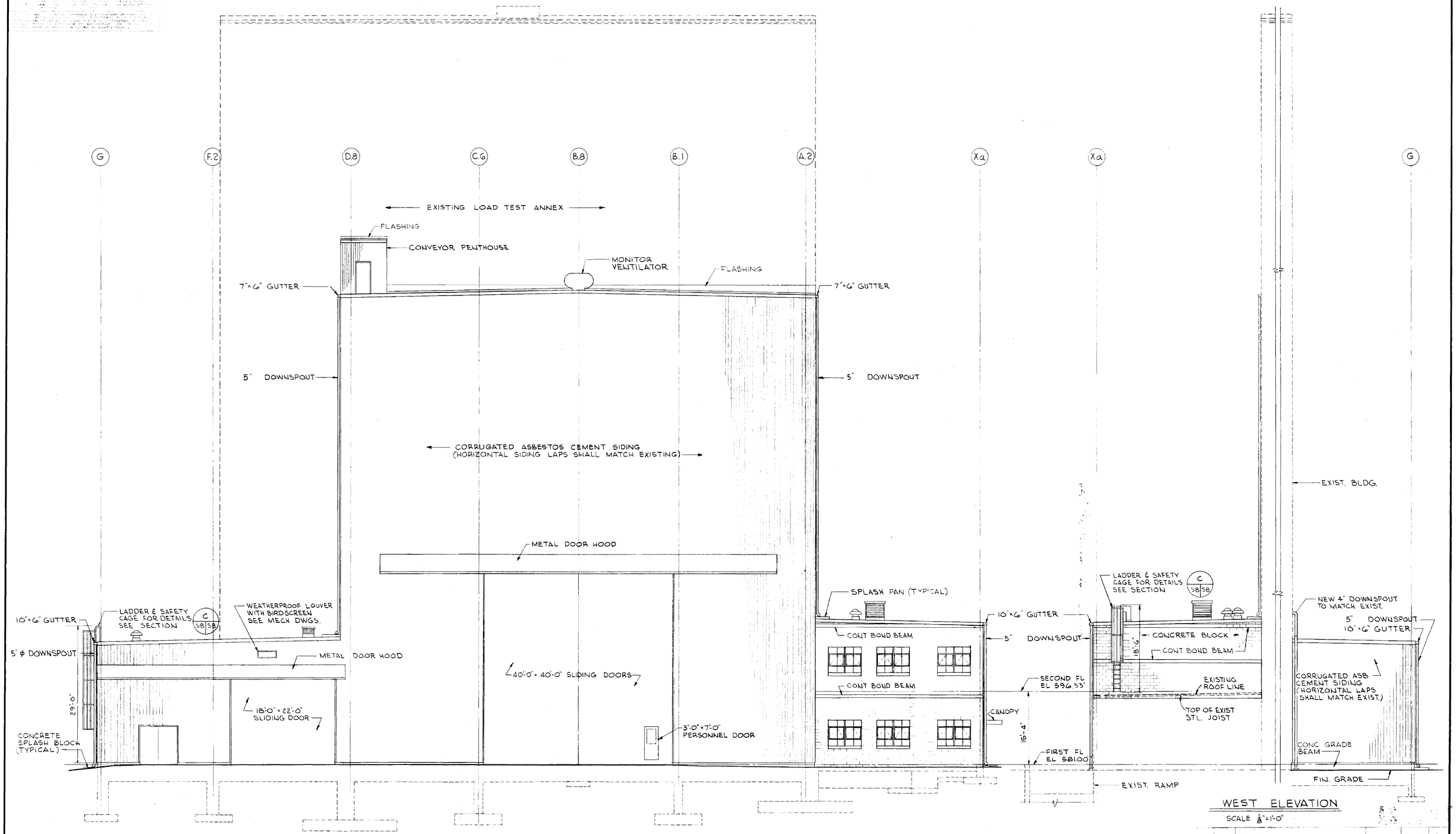

EAST ELEVATION

SCALE $\frac{1}{8}$"=1'-0"

WEST ELEVATION

SCALE $\frac{1}{8}$"=1'-0"

NATIONAL AERONAUTICS AND SPACE ADMINISTRATION — M S F C — HUNTSVILLE, ALABAMA

SANDERS & THOMAS INC. POTTSTOWN PA. · WASH., D.C. MONT. ALA.

EXTENSION OF LOAD TEST ANNEX (BUILDING NO. 4619)

EAST & WEST ELEVATIONS

APPROVED FOR SAFETY — DATE

REF. NO. **A7**

NASA AE CONT. NO. NAS8-2014

FILE NO. M S F C - **8978**

SUBMITTED W.A. Sanders, P.E. — APPROVAL RECOMMENDED: R.L. Barrett — APPROVED R. Lee D. Thompson

DATE 12 MAY 64 — LAB. | DATE 6/15/64 — CHIEF DESIGN BRANCH NASA | DATE 6-16-64

DESIGNED J.R.H. — APPROVAL RECOMMENDED: Grady D. Harmon for — DRWG. NO.

DRAWN J.H. — CHIEF ARCHITECTURAL SECTION — F&D-C-4619-A7

CHECKED M.M. — DESIGN DATE 6-5-64

SCALE 1/8"=1'-0" — SPEC. NO. F&D-433

4619

MSFC MASTER BID DISK 11-18-2013

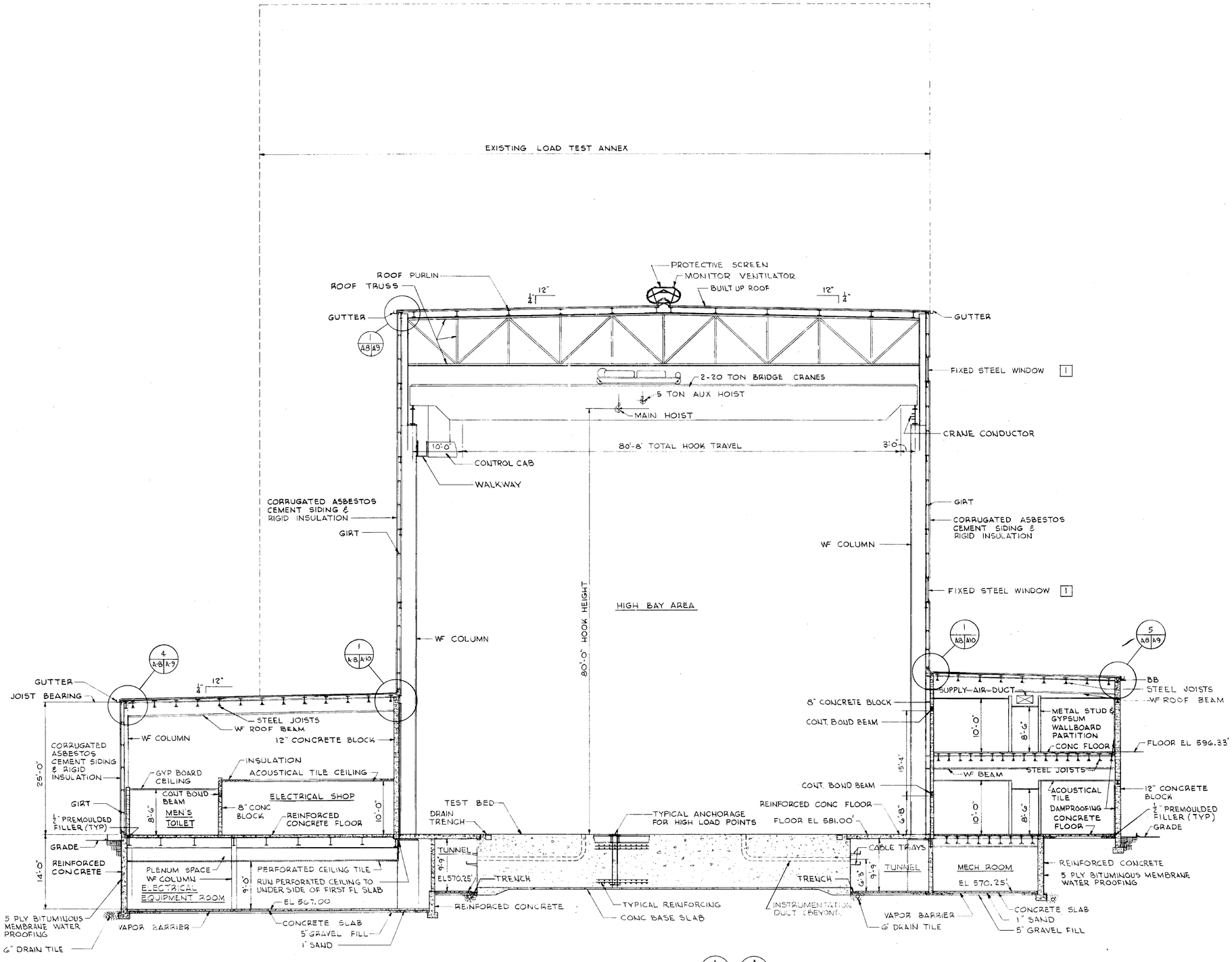

BUILDING SECTION

A A1/A8 A A2/A8

SCALE 1/8"=1'-0"

NAS 8-11014

DRFT BY	DATE	CH. NO	APPROVED

NATIONAL AERONAUTICS AND SPACE ADMINISTRATION — M S F C, HUNTSVILLE, ALABAMA

SANDERS & THOMAS INC. POTTSTOWN PA · WASH., D.C. · MONT. ALA.

EXTENSION OF LOAD TEST ANNEX (BUILDING NO. 4619)

BUILDING SECTION

APPROVED FOR SAFETY
C.O.R. Engr. Safety Office
DATE

BLD. NO. A8

NASA AE CONT. NO. NAS 8-12014

FILE NO M S F C 8979

SUBMITTED Sanders & Thomas, P.C. — APPROVAL RECOMMENDED A.J. Barrett — CHIEF DESIGN BRANCH

NASA AE DATE 12 MAY 64 — LAB DATE 6/16/64 — NASA DATE 6-16-64

DESIGNED J.R.H. — DRAWN J.L. — CHECKED M.L.M. — SCALE 1/8"=1'-0"

APPROVAL RECOMMENDED Frank D. Harmon, Jr. — CHIEF ARCHITECTURE & ENGR. BRANCH

DESIGN DATE: 6-5-64 — SPEC. NO. P.D.-433

DRWG. NO. F&D-C-4619-A8

4619

MSFC MASTER BID DISK 11-18-2013

NOTICE - WHEN GOVERNMENT DRAWINGS, SPECIFICATIONS OR OTHER DATA ARE USED FOR ANY PURPOSE OTHER THAN IN CONNECTION WITH A DEFINITELY RELATED GOVERNMENT PROCUREMENT OPERATION, THE UNITED STATES GOVERNMENT THEREBY INCURS NO RESPONSIBILITY NOR ANY OBLIGATION WHATSOEVER; AND THE FACT THAT THE GOVERNMENT MAY HAVE FORMULATED, FURNISHED, OR IN ANY WAY SUPPLIED THE SAID DRAWINGS, SPECIFICATIONS OR OTHER DATA IS NOT TO BE REGARDED BY IMPLICATION OR OTHERWISE AS IN ANY MANNER LICENSING THE HOLDER OR ANY OTHER PERSON OR CORPORATION, OR CONVEYING ANY RIGHTS OR PERMISSION TO MANUFACTURE, USE OR SELL ANY PATENTED INVENTION THAT MAY IN ANY WAY BE RELATED THERETO.

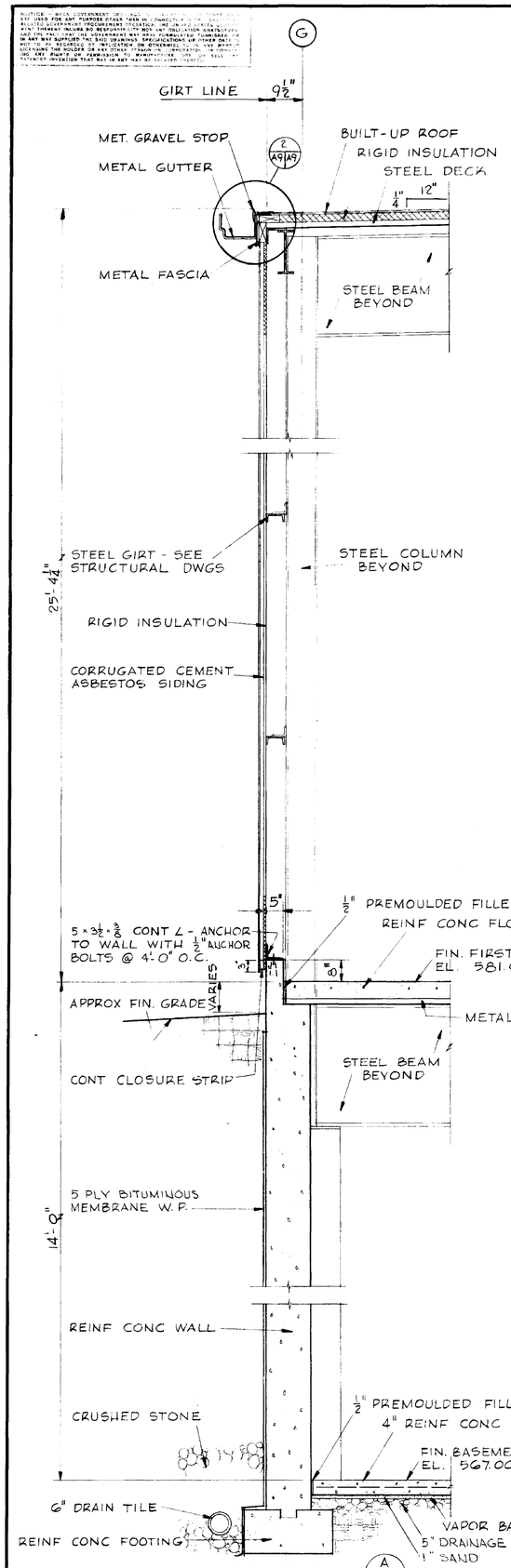

SECTION
SCALE ¾" = 1'-0"
A A2 A9

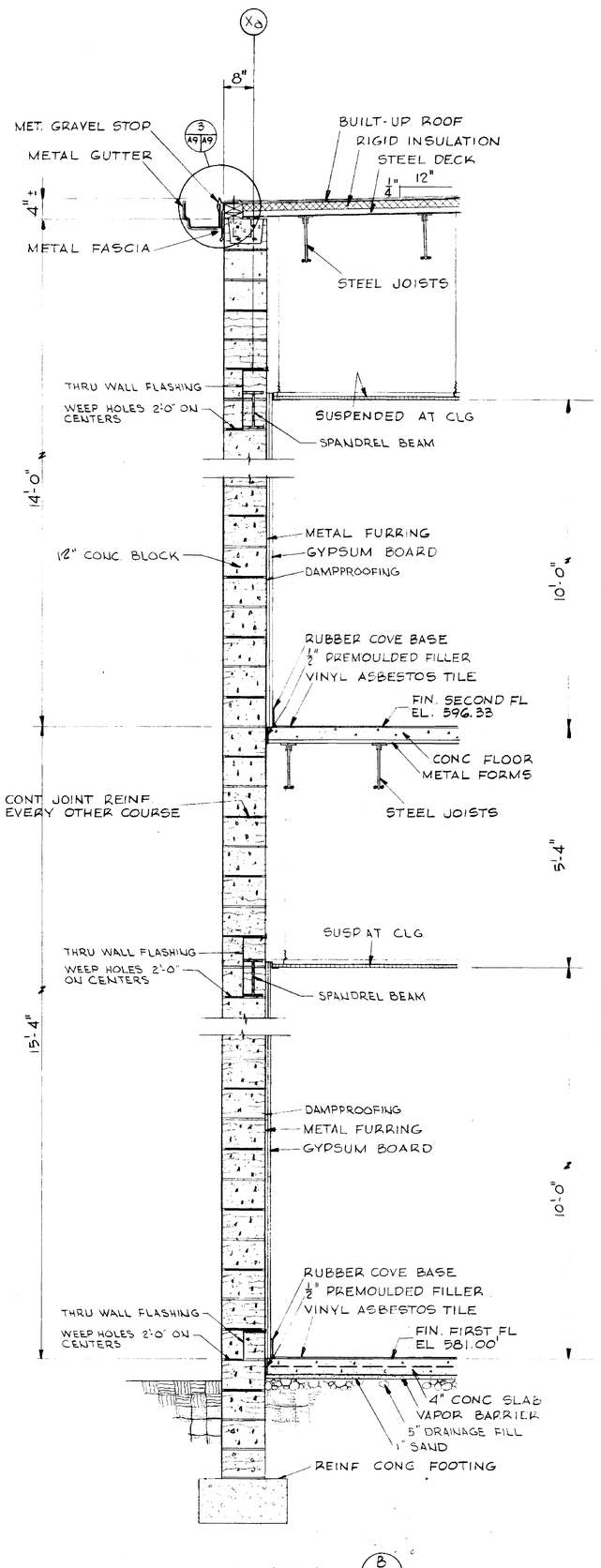

SECTION
SCALE ¾" = 1'-0"
B A2 A9

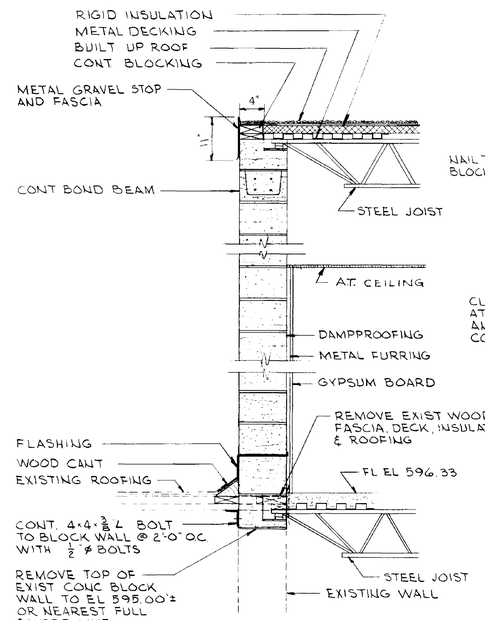

SECTION
SCALE ¾" = 1'-0"
C A3 A9 C A4 A9

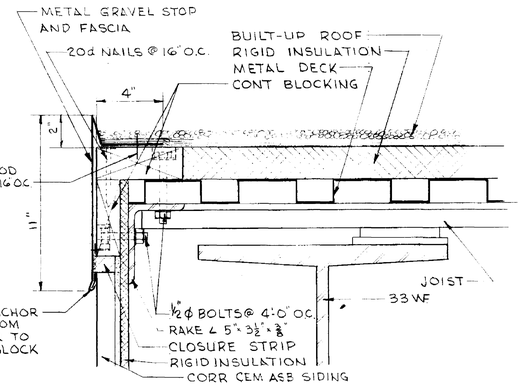

DETAIL
SCALE ; 3"=1'-0"
4 A8 A9 4 A4 A9 4 S13 A9 4 S14 A9

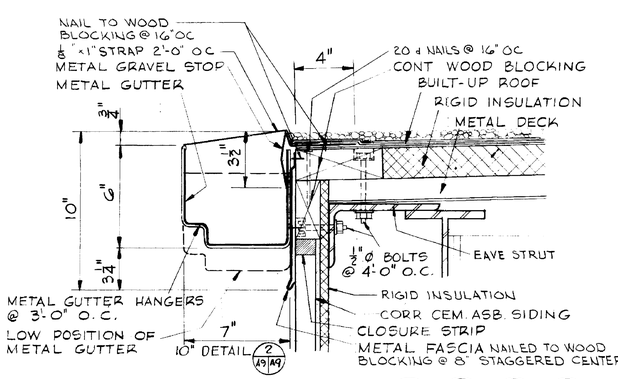

DETAIL
SCALE 3" = 1'-0"
1 A8 A9 4 S11 A9 1 S12 A9 1 A4 A9

DETAIL 2 A9 A9 2 S12 A9 2 A4 A9 SIMILAR

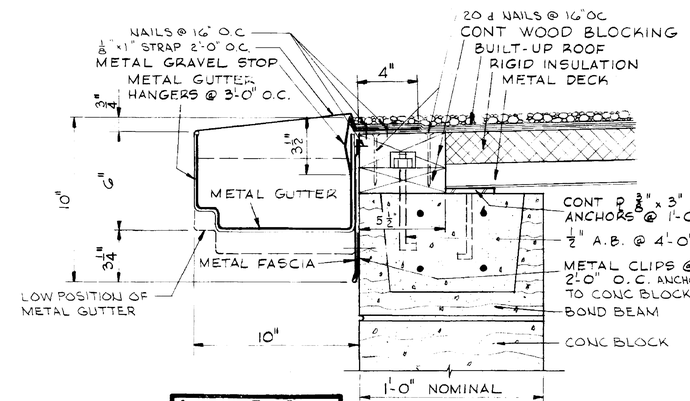

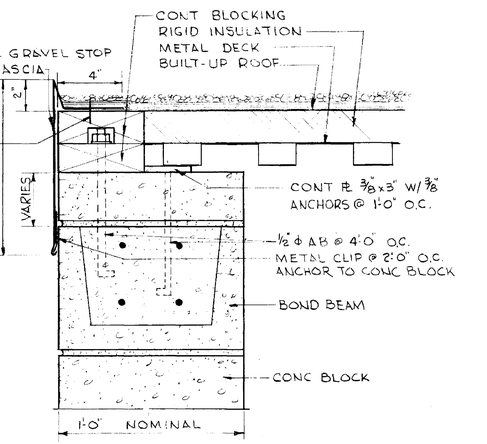

DETAIL
SCALE ; 3"=1'-0"
5 A8 A9 5 A4 A9 5 S13 A9

APPROVED FOR SAFETY
Lloyd Hoge 15 JUNE 64
CEN. EIGG. SAFETY OFFICE
DATE

DETAIL
SCALE 3" = 1'-0"
3 A9 A9 3 S11 A9 3 A4 A9

REF. N. A9

NATIONAL AERONAUTICS AND SPACE ADMINISTRATION			M S F C HUNTSVILLE, ALABAMA
SANDERS & THOMAS INC. POTTSTOWN PA.			ASH. D.C. MONT. ALA.
EXTENSION OF LOAD T ST ANNEX (BUILDING NO. 4619)			
SECTIONS & DETAILS			
NASA AE CONT. NO. NAS 8-12 14			FAC. NO. 8980
SUBMITTED W.A. Sanders P.E.	APPROVAL RECOMMENDED R.A. Barrett		APPROVED R. Robert R. Thomas
AE DATE 12 MAY 64	LAB DATE 6/15/64		NASA DATE 6-16-64
DESIGNED J.R.H.	APPROVAL RECOMMENDED Chief, Architectural Division		DRWG. NO. F8D-C-4619-A9
DRAWN S.H.	DESIGN DATE 6-5-64		
CHECKED M.M.	PROJ. NO. F A D-453		
SCALE AS NOTED			

4619

MSFC MASTER BID DISK 11-18-2013

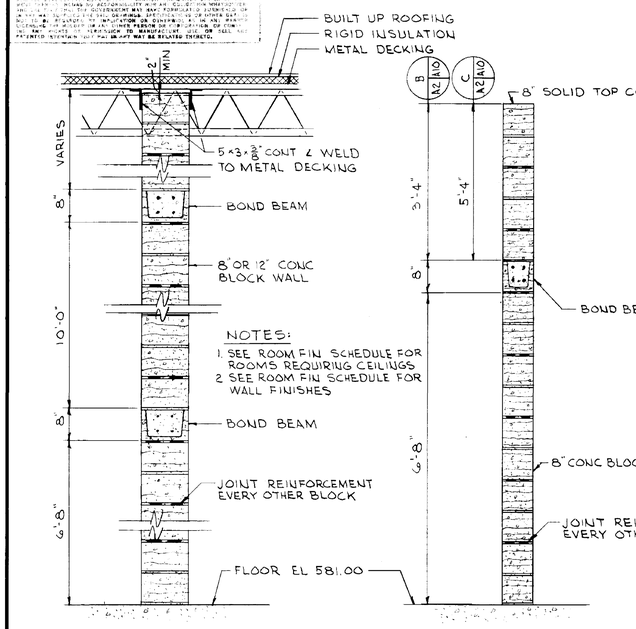

SECTION (A | A2 | A10)
SCALE: 3/4"=1'-0"

SECTION (B | A2 | A10) & (C | A2 | A10)
SCALE: 3/4"=1'-0"

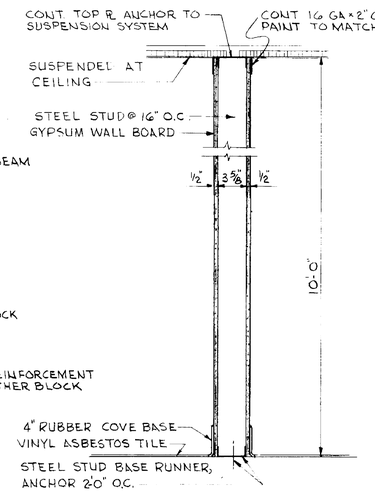

GYPSUM WALL BOARD PARTITION
SCALE 1 1/2"=1'-0"

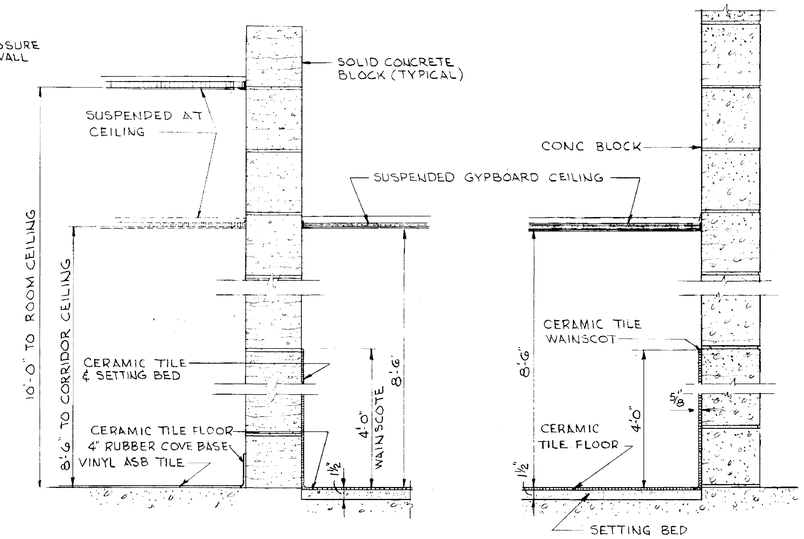

TYPICAL TOILET ROOM PARTITION DETAILS
SCALE: 1 1/2"=1'-0"

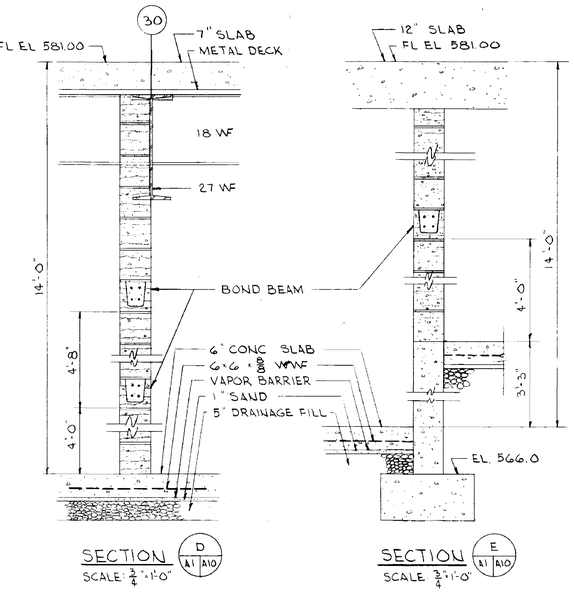

SECTION (D | A1 | A10)
SCALE: 3/4"=1'-0"

SECTION (E | A1 | A10)
SCALE 3/4"=1'-0"

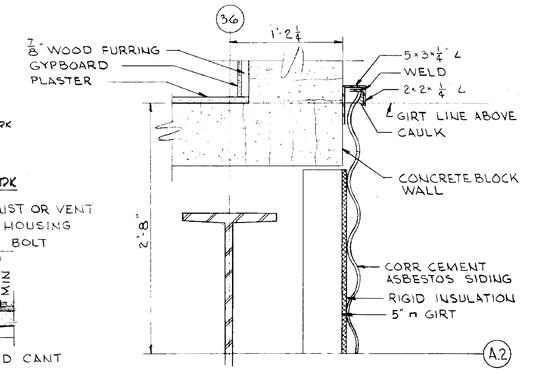

DETAIL (10 | A2 | A10)
SCALE: 1 1/2"=1'-0"

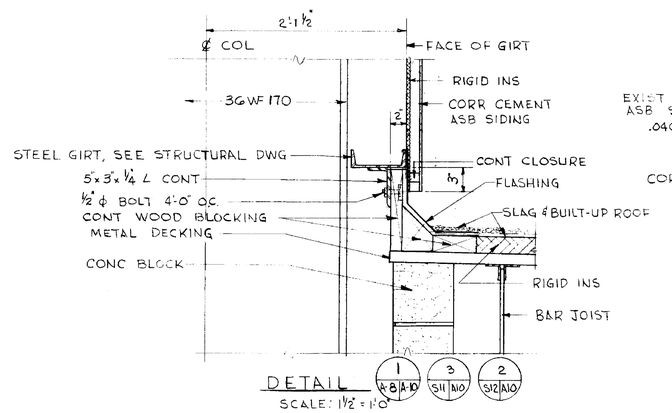

DETAIL (1 | A-8 | A-10) (3 | S11 | A10) (2 | S12 | A10)
SCALE: 1 1/2"=1'-0"

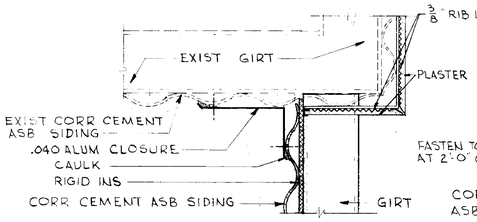

DETAIL (3 | A-2 | A-10)
SCALE: 1 1/2"=1'-0"

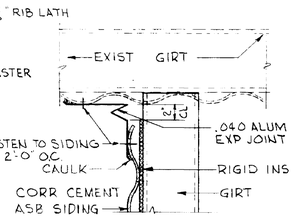

DETAIL (7 | A-6 | A-10)
SCALE: 1 1/2"=1'-0"

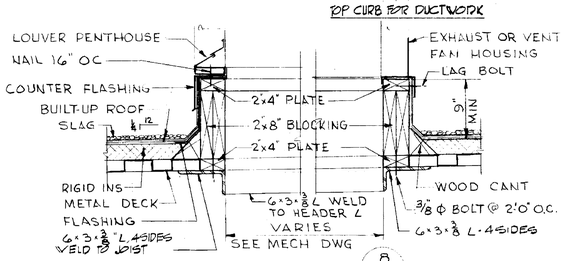

DETAIL (8 | A-4 | A-10)
SCALE: NONE

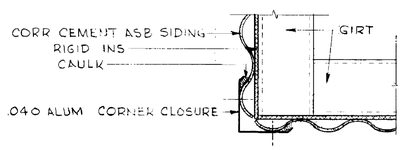

DETAIL (4 | A-2 | A-10)
SCALE: 1 1/2"=1'-0"

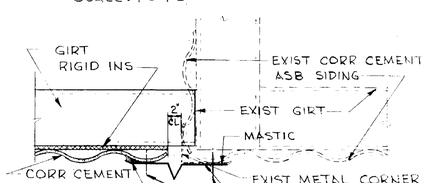

DETAIL (6 | A-5 | A-10)
SCALE: 1 1/2"=1'-0"

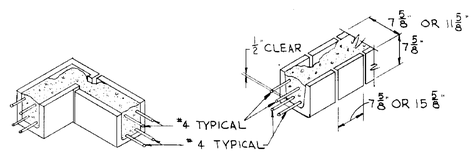

BOND BEAM BLOCK @ CORNER
SCALE: 3/4"=1'-0"

TYPICAL BOND BEAM BLOCK DETAIL
SCALE 3/4"=1'-0"

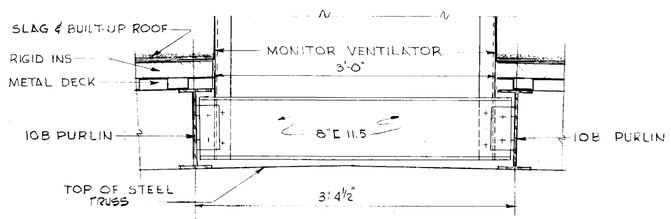

DETAIL (2 | A-4 | A-10)
SCALE: 1 1/2"=1'-0"

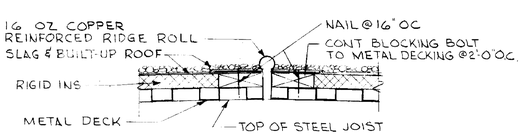

DETAIL (5 | A-4 | A-10)
SCALE: 1 1/2"=1'-0"

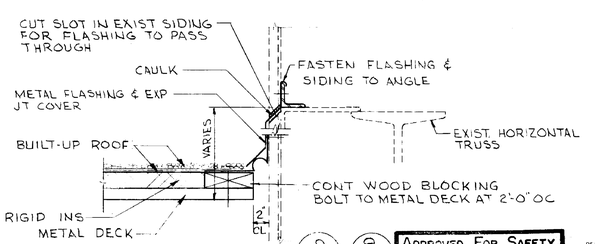

DETAIL (9 | A-4 | A-10) (9 | S14 | A10)
SCALE: 1 1/2"=1'-0"

APPROVED FOR SAFETY
DATE
GEN. FOREMAN
SAFETY ENGINEER

A10

NATIONAL AERONAUTICS AND SPACE ADMINISTRATION			M S F C HUNTSVILLE ALABAMA
SANDERS & THOMAS INC. POTTSTOWN PA. WASH., D.C. MONT. ALA.			
EXTENSION OF LOAD TEST ANNEX (BUILDING NO. 4619)			
SECTIONS & DETAILS			
NASA AL CONT NO. NAS8-12014			FILE NO M S F C 8981
DESIGNED W.C. Saunders P.E.	APPROVAL RECOMMENDED: R.S. Harrett		APPROVED: Robert D. Harmon
SECTION CHIEF	DATE 12 MAY 64	LAB DATE 6/17/64	NASA DATE 6-16-64
DESIGNED J.R.H.	APPROVAL RECOMMENDED: Hardy D. Harmon JR		DRWG. NO.
DRAWN R.D.	CHIEF ARCHITECTURAL DIVISION		F&D-C-4619-A10
TRACED M.L.M.	SECTION DATE 6-5-64		
SCALE AS NOTED	SPEC. NO. F&D-433		

4619

MSFC MASTER BID DISK 11-18-2013

FINISH SCHEDULES

ROOM FINISH SCHEDULE / PAINT SCHEDULE (SEE FINISH NOTE BELOW)

ROOM NO	ROOM NAME	FLOOR MATL	FLOOR FIN	WALL MATL	WALL FIN	CEILING MATL	CEILING FIN	CEILING HT.	BASE	FEDERAL STANDARD 595 COLOR NO. FLOOR	WALL	CEILING	TRIM	REMARKS
01	MECHANICAL EQUIPMENT RM	CONC	HARD	CONC & CB	—	EXPOSED	—	—	—					
02	COMMUNICATIONS ROOM	CONC	HARD	CONC & CB	—	EXPOSED	—	—	—					
03	MECHANICAL ROOM	CONC	HARD	CONC & CB	—	EXPOSED	—	—	—					
04	ELECTRICAL EQUIPMENT RM	CONC	HARD	CONC & CB	PAINT	P.C.	—	9'-0"	—			37875		
05	TUNNEL	CONC	HARD	CONC & CB	—	EXPOSED	—	—	—					
100	HIGH BAY AREA	CONC	HARD	CB & INS	PAINT	EXPOSED	PAINT	—	—			37875		
101	EXP STRESS ANALYSIS RM	CONC	HARD	PLAS & INS	PAINT	AT	—	15'-0"	—			37875		BATT INS. ABOVE CEILING
102	TEST MACHINE ROOM	CONC	HARD	CB & INS	PAINT	AT	—	20'-0"	—			37875		BATT INS. ABOVE CEILING
103	STORAGE ROOM	CONC	HARD	INS & CB	PAINT	EXPOSED	PAINT	—	—			37875		BATT INS. ABOVE CEILING
104	MEN'S LOCKER ROOM	CONC	HARD	CB & INS	PAINT	AT	—	8'-6"	—			37875		BATT INS. ABOVE CEILING
105	TOOL ROOM	CONC	HARD	CB	PAINT	AT	—	12'-0"	—			37875		BATT INS. ABOVE CEILING
106	CORRIDOR	CONC	HARD	CB	PAINT	AT	—	9'-0"	—			37875		BATT INS. ABOVE CEILING
107	MEN'S TOILET	CONC	CER.T.	CB & GYP BD	PAINT	GYP BD	PAINT	8'-6"	CER.T			37875		BATT INS. ABOVE CEILING CER.T. WAINSCOT 4'-0" HIGH
108	ELECTRICAL SHOP	CONC	HARD	CB	PAINT	AT	—	10'-0"	—			37875		BATT INS. ABOVE CEILING
109	HIGH TEMPERATURE CONT RM	CONC	HARD	CB	PAINT	P.C.	—	10'-0"	—			37875		BATT INS. ABOVE CEILING
110	HIGH TEMPERATURE TEST RM	CONC	HARD	CB & INS	PAINT	EXPOSED	PAINT	—	—			37875		
111	ANECHOIC ROOM	CONC	ANECHOIC MATL	CONC	ANECHOIC MATL	CONC.	ANECHOIC MATL	15'-0"	—					
112	VIBRATION EQUIP CONT RM	CONC	V.T.	CB	PAINT	P.C.	—	10'-0"	R.B.			37875		BATT INS. ABOVE CEILING RAISED FLOOR
113	VIBRATION ROOM	CONC	HARD	PLAS & INS	PAINT	EXPOSED	PAINT	—	—			37875		
114	OFFICE	CONC	V.A.T.	GYP BD & PLAS	PAINT	AT	—	10'-0"	R.B.			37875		
115	OFFICE	CONC	V.A.T.	GYP BD & CB	PAINT	AT	—	10'-0"	R.B.			37875		VENETIAN BLINDS
116	OFFICE	CONC	V.A.T.	GYP BD	PAINT	AT	—	10'-0"	R.B.			37875		VENETIAN BLINDS
117	OFFICE	CONC	V.A.T.	GYP BD	PAINT	AT	—	10'-0"	R.B.			37875		VENETIAN BLINDS
118	OFFICE	CONC	VAT	GYP BD & PLAS	PAINT	AT	—	10'-0"	R.B.			37875		
119	MEN'S TOILET	CONC	CER.T.	CB	PAINT	GYP BD	PAINT	8'-6"	CER.T			37875		CER.T. WAINSCOT 4'-0" HIGH
120	WOMEN'S TOILET	CONC	CER.T.	CB	PAINT	GYP BD	PAINT	8'-6"	CER.T.			37875		CER.T. WAINSCOT 4'-0" HIGH
121	WOMEN'S LOUNGE	CONC	V.A.T.	CB	PAINT	AT	—	8'-6"	R.B.			37875		
122	OFFICE	CONC	V.A.T.	GYP BD	PAINT	AT	—	10'-0"	R.B.			37875		VENETIAN BLINDS
123	JANITORS CLOSET	CONC	—	CB	PAINT	EXPOSED	PAINT	—	—			37875		
124	OFFICE	CONC	V.A.T.	GYP BD	PAINT	AT	—	10'-0"	R.B.			37875		VENETIAN BLINDS
125	OFFICE	CONC	V.A.T.	GYP BD & PLAS	PAINT	AT	—	10'-0"	R.B.			37875		
126	OFFICE	CONC	V.A.T.	GYP BD & PLAS	PAINT	AT	—	10'-0"	R.B.			37875		
127	OFFICE	CONC	V.A.T.	GYP BD	PAINT	AT	—	10'-0"	R.B.			37875		VENETIAN BLINDS
128	OFFICE	CONC	V.A.T.	GYP BD	PAINT	AT	—	10'-0"	R.B.			37875		VENETIAN BLINDS
129	OFFICE	CONC	V.A.T.	GYP BD & PLAS	PAINT	AT	—	10'-0"	R.B.			37875		
130	OFFICE	CONC	V.A.T.	GYP BD	PAINT	AT	—	10'-0"	R.B.			37875		VENETIAN BLINDS
131	CORRIDOR	CONC	V.A.T.	GYP BD & CB	PAINT	AT	—	8'-6"	R.B.			37875		
132	OFFICE	CONC	V.A.T.	GYP BD & PLAS	PAINT	AT	—	10'-0"	R.B.			37875		VENETIAN BLINDS
133	OFFICE	CONC	V.A.T.	GYP BD	PAINT	AT	—	10'-0"	R.B.			37875		VENETIAN BLINDS
134	OFFICE	CONC	V.A.T.	GYP BD & PLAS	PAINT	AT	—	10'-0"	R.B.			37875		VENETIAN BLINDS
135	DELETED													
136	DELETED													
137	ENTRY	CONC	V.A.T.	GYP BD	PAINT	AT	—	8'-6"	R.B.			37875		
138	REVERBERANT ROOM	CONC	HARD	CONC	—	CONC	—	VARIES	—					
200	OFFICE	CONC	V.A.T.	GYP BD	PAINT	AT	—	10'-0"	R.B.			37875		VENETIAN BLINDS
201	OFFICE	CONC	V.A.T.	GYP BD & PLAS	PAINT	AT	—	10'-0"	R.B.			37875		
202	OFFICE	CONC	V.A.T.	GYP BD	PAINT	AT	—	10'-0"	R.B.			37875		VENETIAN BLINDS
203	OFFICE	CONC	V.A.T.	GYP BD & PLAS	PAINT	AT	—	10'-0"	R.B.			37875		
204	OFFICE	CONC	V.A.T.	GYP BD & PLAS	PAINT	AT	—	10'-0"	R.B.			37875		
205	OFFICE	CONC	V.A.T.	GYP BD	PAINT	AT	—	10'-0"	R.B.			37875		VENETIAN BLINDS
206	OFFICE	CONC	V.A.T.	GYP BD & PLAS	PAINT	AT	—	10'-0"	R.B.			37875		
207	MEN'S TOILET	CONC	CER.T.	GYP BD	PAINT	GYP BD	PAINT	8'-6"	CER.T.			37875		CER.T. WAINSCOT 4'-0" HIGH
208	OFFICE	CONC	V.A.T.	GYP BD	PAINT	AT	—	10'-0"	R.B.			37875		VENETIAN BLINDS
209	WOMEN'S LOUNGE	CONC	V.A.T.	GYP BD	PAINT	AT	—	8'-6"	R.B.			37875		
210	WOMEN'S TOILET	CONC	CER.T.	GYP BD	PAINT	GYP BD	PAINT	8'-6"	CER.T.			37875		CER.T. WAINSCOT 4'-0" HIGH
211	JANITOR'S CLOSET	CONC	V.A.T.	GYP BD	PAINT	GYP BD	PAINT	8'-6"	R.B.			37875		
212	OFFICE	CONC	V.A.T.	GYP BD	PAINT	AT	—	10'-0"	R.B.			37875		VENETIAN BLINDS
213	OFFICE	CONC	V.A.T.	GYP BD & PLAS	PAINT	AT	—	10'-0"	R.B.			37875		
214	OFFICE	CONC	V.A.T.	GYP BD	PAINT	AT	—	10'-0"	R.B.			37875		VENETIAN BLINDS
215	OFFICE	CONC	V.A.T.	GYP BD & PLAS	PAINT	AT	—	10'-0"	R.B.			37875		
216	OFFICE	CONC	V.A.T.	GYP BD	PAINT	AT	—	10'-0"	R.B.			37875		VENETIAN BLINDS
217	OFFICE	CONC	V.A.T.	GYP BD	PAINT	AT	—	10'-0"	R.B.			37875		VENETIAN BLINDS
218	OFFICE	CONC	V.A.T.	GYP BD & PLAS	PAINT	AT	—	10'-0"	R.B.			37875		
219	OFFICE	CONC	V.A.T.	GYP BD	PAINT	AT	—	10'-0"	R.B.			37875		VENETIAN BLINDS
220	OFFICE	CONC	V.A.T.	GYP BD & PLAS	PAINT	AT	—	10'-0"	R.B.			37875		
221	CORRIDOR	CONC	V.A.T.	GYP BD & CB	PAINT	AT	—	8'-6"	R.B.			37875		
222	OFFICE	CONC	V.A.T.	GYP BD	PAINT	AT	—	10'-0"	R.B.			37875		VENETIAN BLINDS
223	OFFICE	CONC	V.A.T.	GYP BD	PAINT	AT	—	10'-0"	R.B.			37875		VENETIAN BLINDS
224	OFFICE	CONC	V.A.T.	GYP BD & PLAS	PAINT	AT	—	10'-0"	R.B.			37875		VENETIAN BLINDS
S-1	STAIRS	CONC	V.A.T.	CB	PAINT	PLAS	PAINT	VARIES	—			37875		PAINTED METAL RISERS
S-2	STAIRS	CONC	V.A.T.	CB	PAINT	PLAS	PAINT	VARIES	—			37875		AND RUBBER SAFETY TREADS
S-3	STAIRS	CONC	—	CB	PAINT	PLAS	PAINT	VARIES	—			37875		PAINTED METAL RISERS AND METAL SAFETY NOSING

DOOR SCHEDULE

NO.	SIZE	TYPE	MATERIAL	OPERATION	SECTION H	J	S	HARDWARE	REMARKS
1	10'-0"×9'-0"	L	METAL	MOTOR OPERATED ROLL-UP DOOR	9	9	9		
2	3'-0"×6'-8"×1 3/4"	A	H.M.	A	3	3	—	HW-7	
3	2-4'-0"×8'-0"×1 3/4"	K	H.M.	G	3	3	—	HW-14	
4	3'-0"×6'-8"×1 3/4"	E	H.M.	B	3	3	—	HW-13	"B" LABEL DOOR & FRAME
5	10'-0"×8'-0"	L	METAL	MOTOR OPERATED ROLL-UP DOOR	10	10			
6	2-4'-0"×8'-0"×1 3/4"	J	H.M.	H	3	3	—	HW-5	
7	3'-0"×6'-8"×1 3/4"	A	H.M.	D	3	3	—	HW-8	
8	3'-0"×6'-8"×1 3/4"	E	H.M.	A	3	3	—	HW-13	"B" LABEL DOOR & FRAME
9	2-4'-0"×10'-0"×1 3/4"	K	H.M.	F	5	5	5	HW-5	SOUND INS, CL 47 Db
10	3'-0"×6'-8"×1 3/4"	A	H.M.	D	5	5	5	HW-8	SOUND INS, CL 47 Db
11	2-5'-0"×10'-0"×1 3/4"	K	H.M.	F	3	3	—	HW-5	
12	3'-0"×6'-8"×1 3/4"	A	H.M.	C	3	3	—	HW-8	
13	3'-0"×6'-8"×1 3/4"	E	H.M.	C	3	3	—	HW-10	"B" LABEL DOOR & FRAME
14	15'-0"×15'-0"	L	METAL	MOTOR OPERATED ROLL-UP DOOR	10	10			
15	15'-0"×15'-0"	L	METAL	MOTOR OPERATED ROLL-UP DOOR	11	11	9		
16	2-3'-6"×8'-0"×1 3/4"	G	H.M.	F	3	3	—	HW-5	
•17	3'-0"×6'-8"×1 3/4"	A	H.M.	B	3	3	—	HW-10	
18	2-3'-0"×8'-0"×1 3/4"	G	H.M.	H	3	3	3	HW-2	
•19	2'-6"×6'-8"×1 3/4"	A	H.M.	A	3	2	—	HW-10	
20	2-3'-0"×8'-0"×1 3/4"	G	H.M.	G	3	3	—	HW-6	
21	2-3'-0"×8'-0"×1 3/4"	G	H.M.	F	3	3	—	HW-5	
22	2-3'-0"×8'-0"×1 3/4"	G	H.M.	F	3	3	—	HW-5	
23	3'-0"×6'-8"×1 3/4"	A	H.M.	D	3	3	—	HW-8	
24	3'-0"×6'-8"×1 3/4"	C	H.M.	C	3	3	—	HW-8	
25	3'-0"×6'-8"×1 3/4"	A	H.M.	C	3	3	—	HW-8	
26	15'-0"×15'-0"	L	METAL	MOTOR OPERATED ROLL-UP DOOR	11	11	9		
27	15'-0"×15'-0"	L	METAL	MOTOR OPERATED ROLL-UP DOOR	10	10			
28	2-3'-0"×8'-0"×1 3/4"	G	H.M.	F	3	3	—	HW-5	
29	2-5'-0"×10'-0"×1 3/4"	K	H.M.	F	5	5	5	HW-5	SOUND INS, CL 47 Db
30	22'-0"×18'-0"	P	STEEL	MOTOR OPERATED SLIDING-ONE WAY	12	12	12		
31	3'-0"×6'-8"×1 3/4"	A	H.M.	B	5	5	5	HW-1	SOUND INS, CL 47 Db
32	3'-0"×6'-8"×1 3/4"	A	H.M.	B	5	5	5	HW-1	SOUND INS, CL 47 Db
33	3'-0"×6'-8"×6"	A		D	14	14	—		SOUND INS, CL 53 Db
34	40'-0"×40'-0"	N	STEEL	MOTOR OPERATED SLIDING-TWO WAY	13	12	13		
35	3'-0"×6'-8"×1 3/4"	A	H.M.	D	5	5	5	HW-8	SOUND INS, CL 47 Db
36	2-3'-0"×6'-8"×1 3/4"	H	H.M.	H	3	3	—	HW-11	"B" LABEL DOOR & FRAME
37	2'-6"×6'-8"×1 3/4"	A	H.M.	C	3	3	—	HW-8	
38	2-3'-0"×8'-0"×1 3/4"	K	H.M.	H	5	5	5	HW-5	SOUND INS, CL 47 Db
39	2-3'-0"×8'-0"×1 3/4"	K	H.M.	H	5	5	5	HW-5	SOUND INS, CL 47 Db
40	2-3'-0"×8'-0"×1 3/4"	G	H.M.	E	3	3	—	HW-12	
41	3'-0"×6'-8"×1 3/4"	C	WOOD	A	4	4	—	HW-10	
•42	2'-6"×6'-8"×1 3/4"	A	WOOD	A	4	2	—	HW-4	
•43	2'-6"×6'-8"×1 3/4"	A	WOOD	A	4	4	—	HW-4	
•44	2'-6"×6'-8"×1 3/4"	A	WOOD	D	3	2	—	HW-4	
45	2-3'-0"×6'-8"×1 3/4"	H	WOOD	F	4	4	—	HW-6	"B" LABEL DOOR & FRAME
46	2-3'-0"×7'-0"×1 3/4"	Q	ALUMINUM & GLASS	H	6	6	6	HW-3	
•47	3'-0"×6'-8"×1 3/4"	C	WOOD	A	1	1	—	HW-8	
•48	3'-0"×6'-8"×1 3/4"	D	WOOD	A	1	1	—	HW-8	
•49	3'-0"×6'-8"×1 3/4"	C	WOOD	B	1	1	—	HW-1	
•50	3'-0"×6'-8"×1 3/4"	C	WOOD	A	1	1	—	HW-1	
•51	3'-0"×6'-8"×1 3/4"	D	WOOD	B	1	1	—	HW-1	
•52	3'-0"×6'-8"×1 3/4"	D	WOOD	A	1	1	—	HW-8	
•53	3'-0"×6'-8"×1 3/4"	C	WOOD	B	1	1	—	HW-1	
•54	3'-0"×6'-8"×1 3/4"	C	WOOD	A	1	1	—	HW-1	
•55	3'-0"×6'-8"×1 3/4"	C	WOOD	A	1	1	—	HW-1	
•56	3'-0"×6'-8"×1 3/4"	C	WOOD	B	1	1	—	HW-1	
•57	3'-0"×6'-8"×1 3/4"	C	WOOD	A	1	1	—	HW-1	
•58									DELETED
•59	3'-0"×6'-8"×1 3/4"	C	WOOD	B	1	1	—	HW-1	
•60	3'-0"×6'-8"×1 3/4"	D	WOOD	A	1	1	—	HW-8	
•61	3'-0"×6'-8"×1 3/4"	C	WOOD	A	1	1	—	HW-1	
•62	3'-0"×6'-8"×1 3/4"	C	WOOD	A	1	1	—	HW-1	
•63	3'-0"×6'-8"×1 3/4"	D	WOOD	B	1	1	—	HW-1	
•64	3'-0"×6'-8"×1 3/4"	D	WOOD	A	1	1	—	HW-1	
•65	3'-0"×6'-8"×1 3/4"	C	WOOD	D	1	1	—	HW-8	
•66	3'-0"×6'-8"×1 3/4"	B	WOOD	D	1	1	—	HW-1	
•67	3'-0"×6'-8"×1 3/4"	B	WOOD	C	1	1	—	HW-1	
•68	3'-0"×6'-8"×1 3/4"	C	WOOD	A	1	1	—	HW-1	
69	3'-0"×6'-8"×1 3/4"	C	WOOD	B	4	4	—	HW-13	
•70	2'-6"×6'-8"×1 3/4"	A	WOOD	B	4	2	—	HW-4	
•71	2'-6"×6'-8"×1 3/4	A	WOOD	A	4	4	—	HW-10	
•72	2'-6"×6'-8"×1 3/4	A	WOOD	D	3	2	—	HW-4	
•73	2'-6"×6'-8"×1 3/4"	A	WOOD	D	4	4	—	HW-8	
74	3'-0"×6'-8"×1 3/4"	E	WOOD	B	4	4	—	HW-13	"B" LABEL DOOR & FRAME
•75	3'-0"×6'-8"×1 3/4"	D	WOOD	B	1	1	—	HW-1	
•76	3'-0"×6'-8"×1 3/4"	D	WOOD	A	1	1	—	HW-1	
•77	3'-0"×6'-8"×1 3/4"	A	WOOD	A	1	1	—	HW-1	
•78	3'-0"×6'-8"×1 3/4	A	WOOD	B	1	1	—	HW-1	
•79	3'-0"×6'-8"×1 3/4"	C	WOOD	B	1	1	—	HW-1	
•80	3'-0"×6'-8"×1 3/4"	C	WOOD	B	1	1	—	HW-1	
•81	3'-0"×6'-8"×1 3/4"	C	WOOD	A	1	1	—	HW-1	
•82	3'-0"×6'-8"×1 3/4"	D	WOOD	A	1	1	—	HW-1	
•83	3'-0"×6'-8"×1 3/4"	D	WOOD	B	1	1	—	HW-1	
•84	3'-0"×6'-8"×1 3/4"	C	WOOD	A	1	1	—	HW-1	
•85	3'-0"×6'-8"×1 3/4"	A	WOOD	B	1	1	—	HW-1	
•86	3'-0"×6'-8"×1 3/4	D	WOOD	B.	1	1	—	HW-1	
•87	3'-0"×6'-8"×1 3/4"	D	WOOD	B	1	1	—	HW-8	
•88	3'-0"×6'-8"×1 3/4"	B	WOOD	A	1	1	—	HW-8	
•89	3'-0"×6'-8"×1 3/4"	C	WOOD	A	1	1	—	HW-1	
•90	3'-0"×6'-8"×1 3/4"	A	WOOD	B	1	1	—	HW-1	
•91	3'-0"×6'-8"×1 3/4"	B	WOOD	D	1	1	—	HW-1	
•92	3'-0"×6'-8"×1 3/4"	A	WOOD	C	1	1	—	HW-1	
•93	3'-0"×6'-8"×1 3/4"	A	WOOD	D	1	1	—	HW-1	
•94	3'-0"×6'-8"×1 3/4"	B	WOOD	B	1	1	—	HW-1	
•95	3'-0"×6'-8"×1 3/4"	B	WOOD	A	1	1	—	HW-1	
96	3'-0"×6'-8"×1 3/4"	A	H M	C	8	8	8	HW-8	DOOR @ CONVEYOR PENTHOUSE
97	8'-0"×8'-0"×6"	M			14	14	14		SOUND INS, CL 53 Db
98	9'-0"×9'-0"×6"	M			14	14	14		SOUND INS, CL 53 Db
99	3'-0"×6'-8"×1 3/4"	A	H M	B	5	5	5	HW-8	SOUND INS, CL 47 Db

DOOR SCHEDULE (CONTINUED)

NO.	SIZE	TYPE	MATERIAL	OPERATION	SECTION H	J	S	HARDWARE	REMARKS
100	3'-0"×6'-8"×6"	F		A	14	14	—		SOUND INS, CL 53 Db
101	8'-0"×8'-0"×6"	K		E	14	14	15		SOUND INS, CL 53 Db
102	2-4'-0"×8'-0"×1 3/4"	K	H M	H	—	7	—	HW-9	

FINISH NOTE
PAINT COLORS TO BE SELECTED BY THE CONTRACTING OFFICER

NOTES:

1. DOORS NUMBERED 33, 97, 98, 100 AND 101 SHALL BE CAPABLE OF WITHSTANDING 150 PSF OF SURFACE PRESSURE.
2. DOORS MARKED THUS • SHALL BE UNDERCUT 1"
3. PROVIDE AND INSTALL VENETIAN BLINDS FOR ALL WINDOWS AS INDICATED IN THE FINISH SCHEDULE ABOVE.
4. FOR DOOR DETAILS SEE DWGS A12, A17, A18 AND A19.
5. FOR LINTEL SCHEDULE SEE DWG. A19.

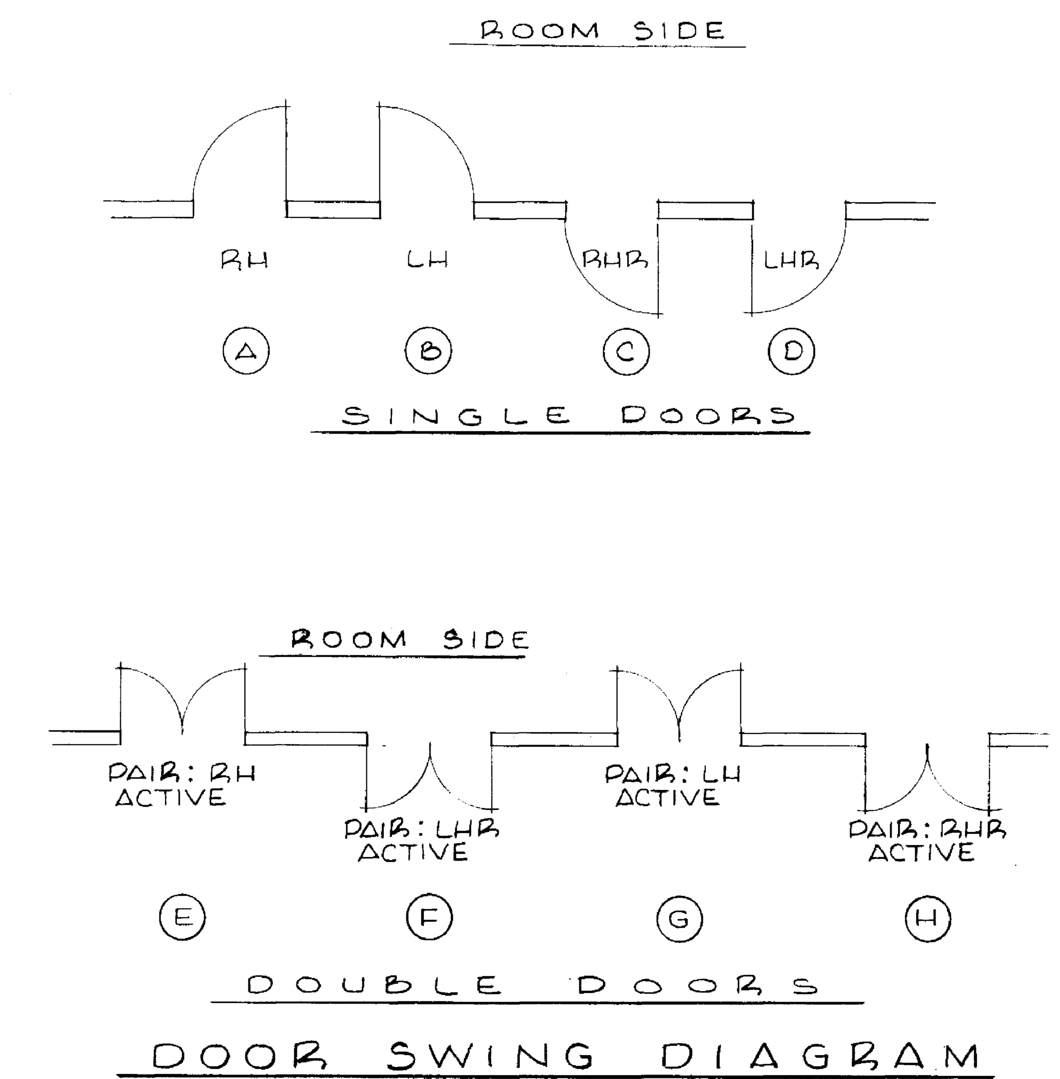

DOOR SWING DIAGRAM
NO SCALE

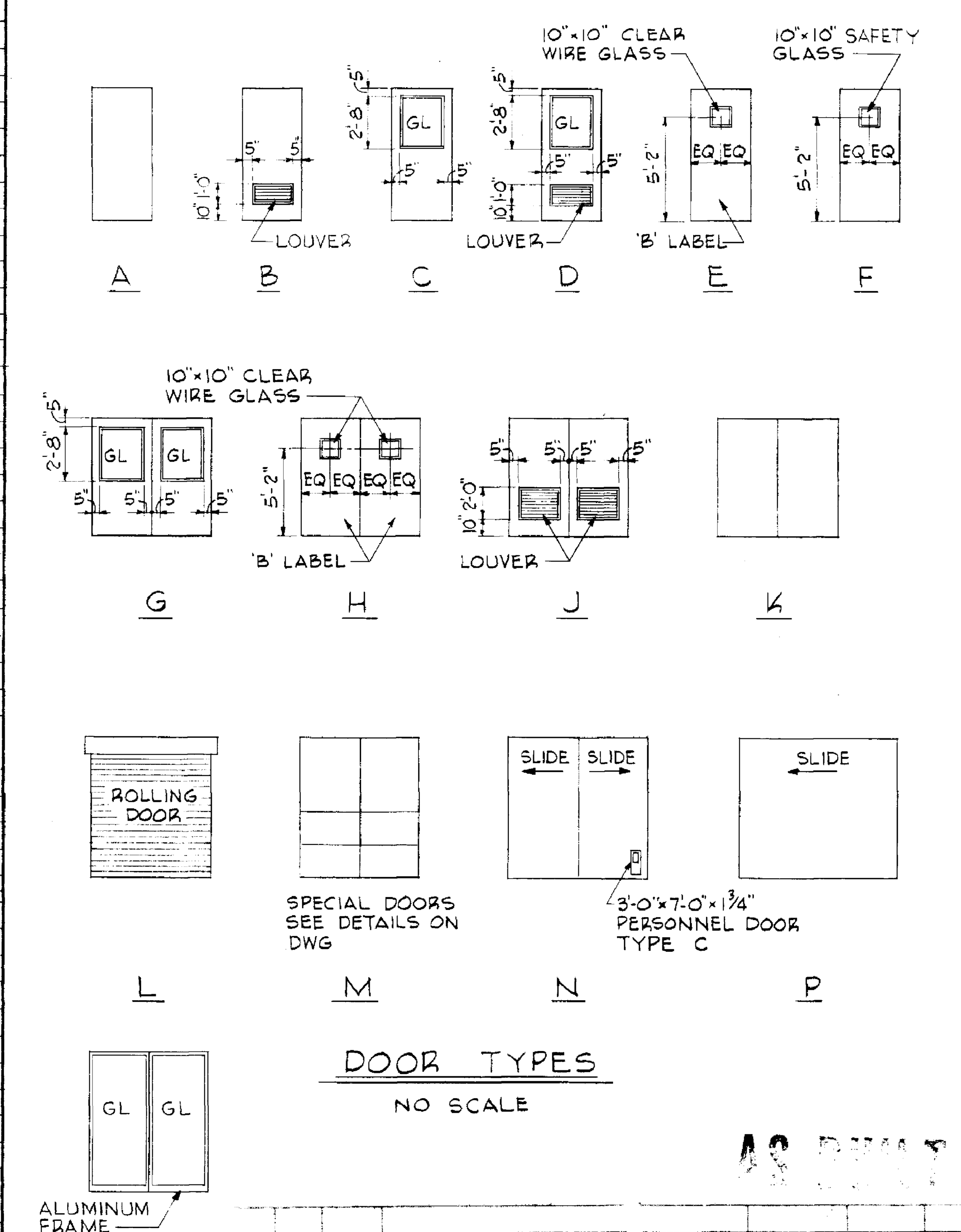

DOOR TYPES
NO SCALE

AS BUILT

APPROVED FOR SAFETY
15 June 64
SAFETY OFFICE
DATE

REV	BY	DATE		C.I. NO.	APPROVED

NATIONAL AERONAUTICS AND SPACE ADMINISTRATION — M S F C, HUNTSVILLE, ALABAMA

SANDERS & THOMAS INC. POTTSTOWN PA. WASH., D.C. MONT., ALA.

EXTENSION OF LOAD TEST ANNEX (BUILDING NO. 4619)

ROOM, PAINT AND DOOR SCHEDULES

NASA AE CONT NO. NAS 8-12014
FILE NO. MSFC 8982
SUBMITTED: W A Sanders P C — SECY-TREAS — DATE 12 MAY 64
APPROVAL RECOMMENDED: R S Garrett — LAB — DATE: 6/15/64
APPROVED: Robert D. Cla... — CHIEF DESIGN BRANCH — NASA — DATE: 6-16-64
DESIGNED J.R.H.
DRAWN BK
CHECKED MLM
SCALE: AS NOTED
APPROVAL RECOMMENDED: Grady D. Harmon — CHIEF ARCHITECTURAL SECTION
DESIGN DATE: 6-5-64
SPEC. NO. F & D-433
REF. NO.
A11
DRWG. NO. F&D-C-4619-A11

4619

MSFC MASTER BID DISK 11-18-2013

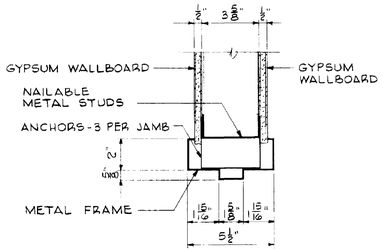

HEAD & JAMB 1

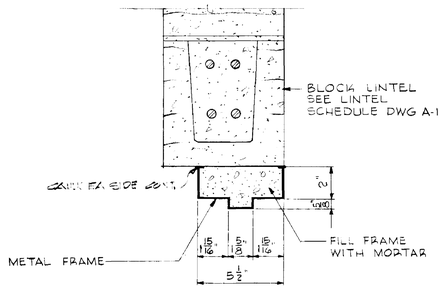

HEAD 4

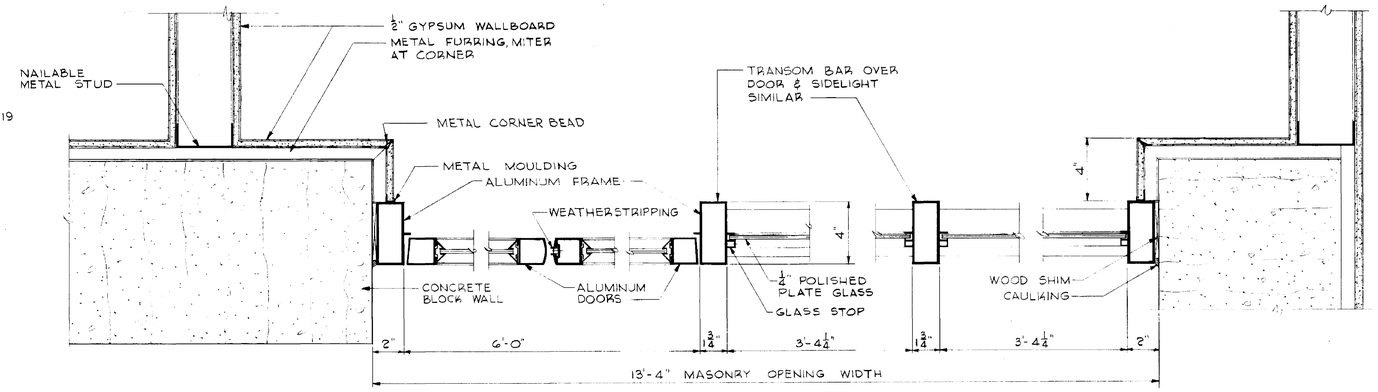

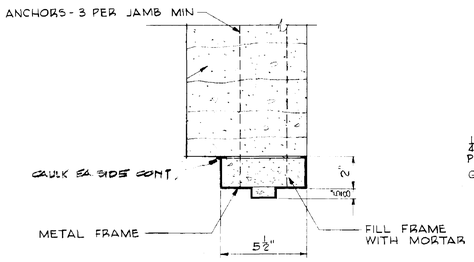

JAMB 4

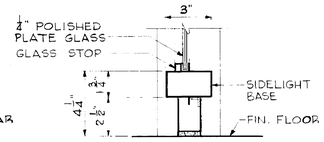

SILL 6 AT SIDELIGHT

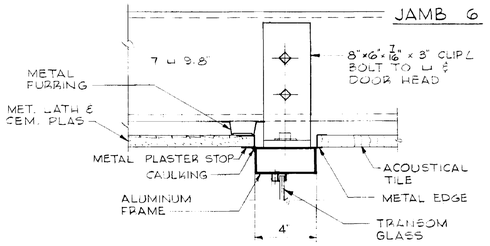

HEAD 6

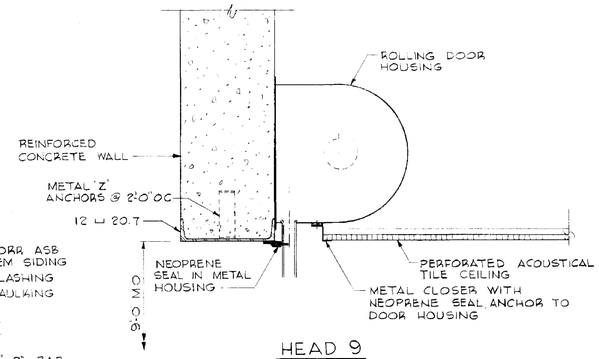

HEAD 9

SCALE 1½"=1'-0"

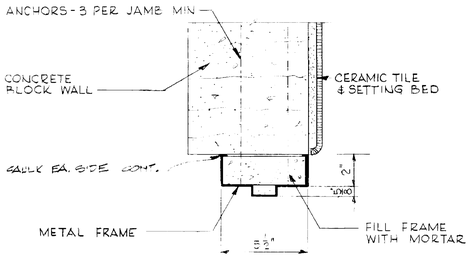

JAMB 2

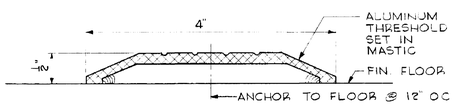

SILL 6 AT DOOR

SCALE = FULL SIZE

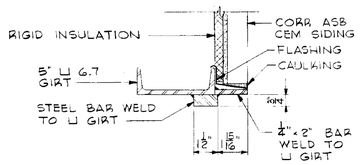

HEAD 8

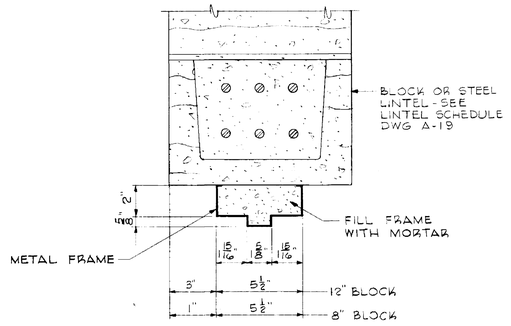

HEAD 3

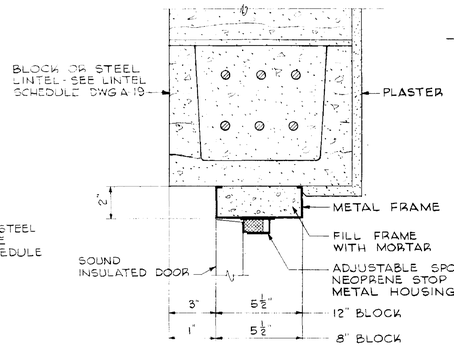

HEAD 5

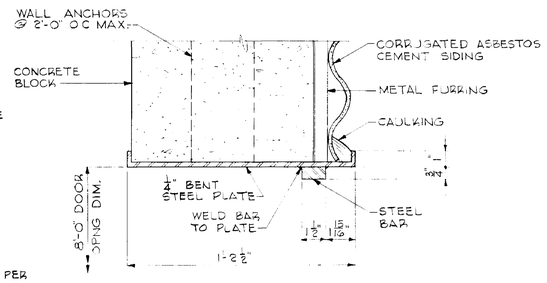

JAMB 7

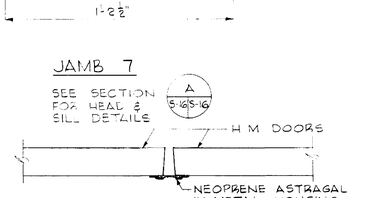

ASTRAGAL DETAIL DOORS 18 & 102

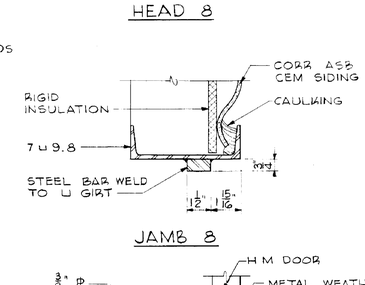

JAMB 8

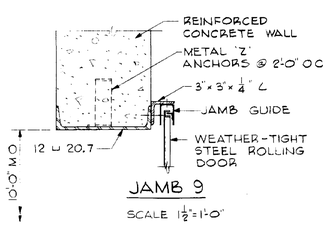

JAMB 9

SCALE 1½"=1'-0"

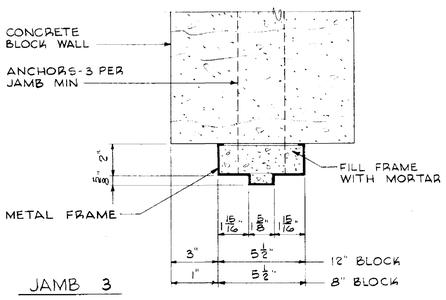

JAMB 3

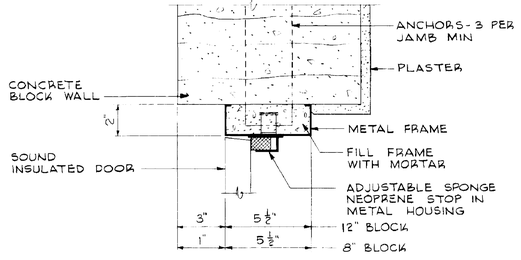

JAMB 5

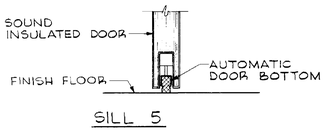

SILL 5

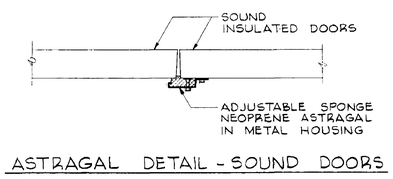

ASTRAGAL DETAIL - SOUND DOORS

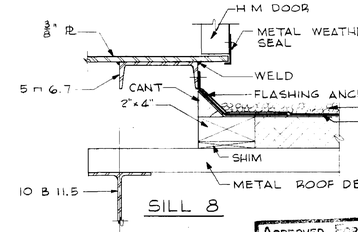

SILL 8

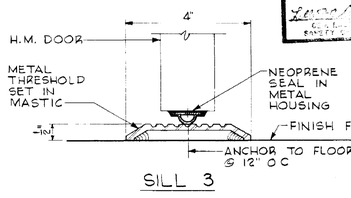

SILL 3

SCALE 6"=1'-0"

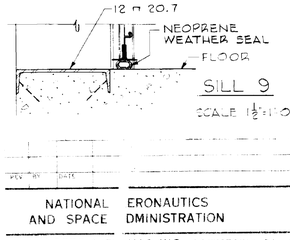

SILL 9

SCALE 1½"=1'-0"

APPROVED FOR SAFETY

15 June 64

DATE

NATIONAL AERONAUTICS AND SPACE ADMINISTRATION — M S F C — HUNTSVILLE, ALABAMA

SANDERS & TI — MAS INC., FOTTSTOWN PA. WASH., D.C. MONT., ALA.

EXTENSION (LOAD TEST ANNEX (BUILDING NO. 4619)

DOOR DETAILS

NASA AE CONT NO NAS	12014	TITLE NO MSFC	8983
SUBMITTED	APPROVAL BY COMMANDER	APPROVED	
AE PROJ.	DATE 12 MAY 64	DATE 6/15/64	CHIEF, DESIGN BRANCH
DESIGNED J.R.H	APPROVAL RECOMMENDED		NASA DATE 6-16-64
DRAWN J.R.H	CHIEF,		DRWG. NO.
TRACED M.M	DIVISION,		F8D-C-4619-A12
CHECKED	DATE 6-5-64		
SCALE 3"=1'-0" OR AS NOTED	PROJ. NO. F & D-433		

A12

4619

MSFC MASTER BID DISK 11-18-2013

48 WINDOWS @ 3'-8 7/8" + 47 MULLIONS @ 3 1/8" = 192'-8 7/8"

4'-1" WD

WINDOW TYPE [1]
FIXED STEEL WINDOWS

WINDOW SCHEDULE
SCALE: 1/8"=1'-0"

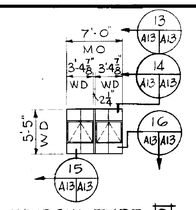

WINDOW TYPE [2]
PROJECTED STEEL WINDOWS

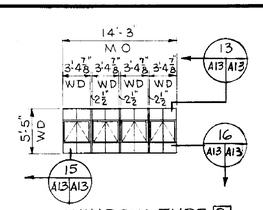

WINDOW TYPE [3]
PROJECTED STEEL WINDOWS

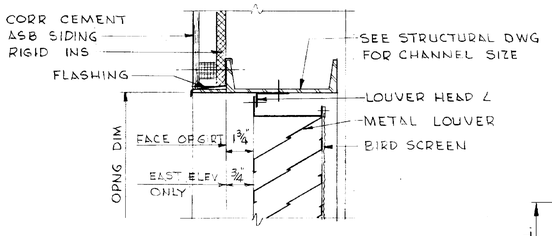

HEAD DETAIL
SCALE: 3"=1'-0"

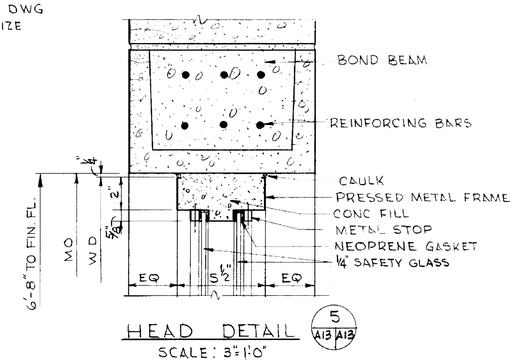

HEAD DETAIL
SCALE: 3"=1'-0"

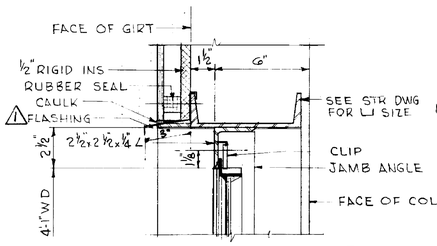

HEAD DETAIL
SCALE: 3"=1'-0"

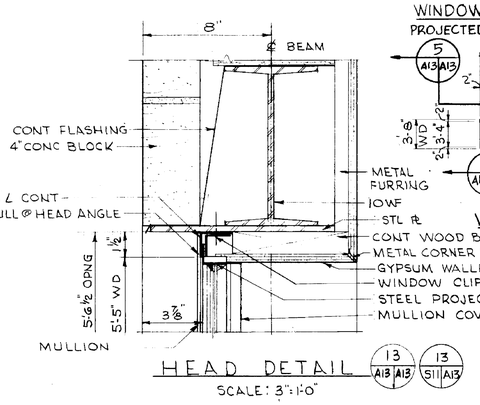

HEAD DETAIL
SCALE: 3"=1'-0"

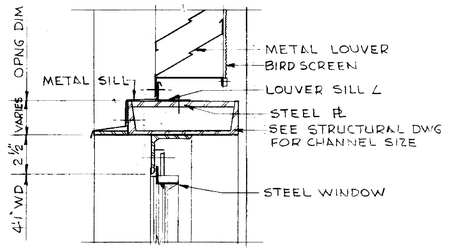

DETAIL
SCALE: 3"=1'-0"

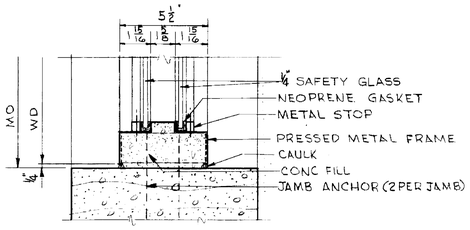

JAMB DETAIL
SCALE: 3"=1'-0"

SILL DETAIL
SCALE: 3"=1'-0"

SIMILAR

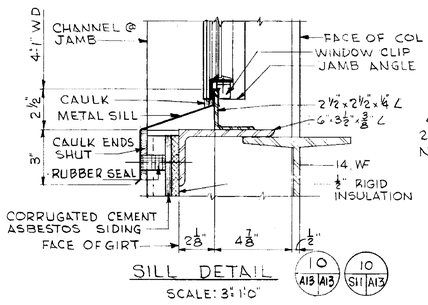

SILL DETAIL
SCALE: 3"=1'-0"

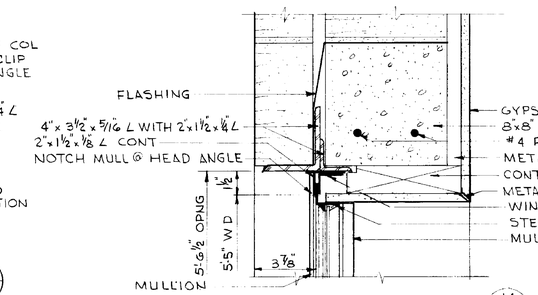

HEAD DETAIL
SCALE: 3"=1'-0"

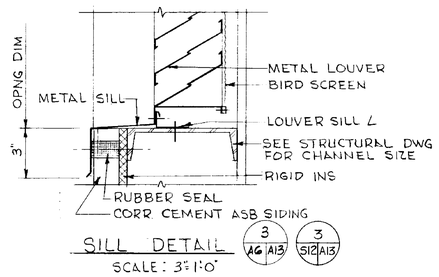

SILL DETAIL
SCALE: 3"=1'-0"

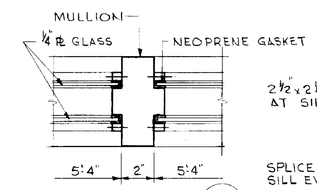

MULLION DETAIL
SCALE: 3"=1'-0"

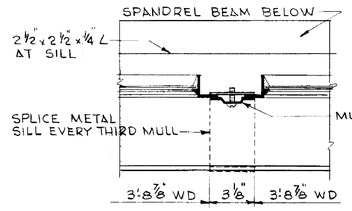

MULLION DETAIL
SCALE: 3"=1'-0"

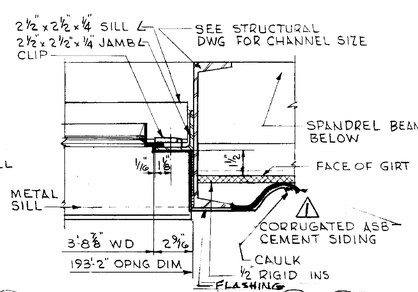

JAMB DETAIL
SCALE: 3"=1'-0"

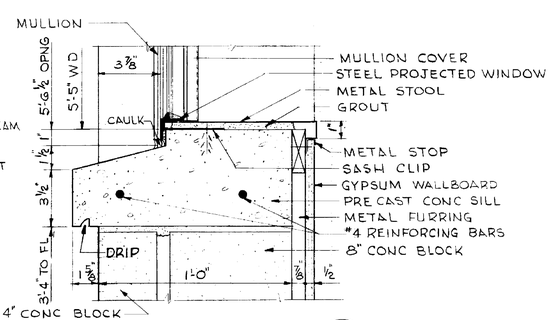

SILL DETAIL
SCALE: 3"=1'-0"

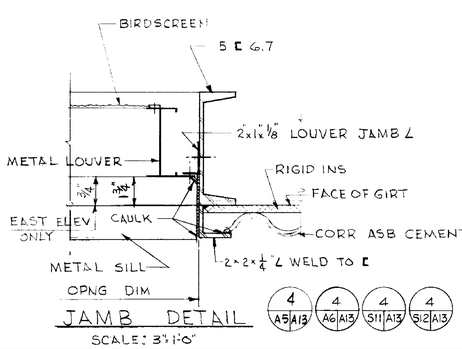

JAMB DETAIL
SCALE: 3"=1'-0"

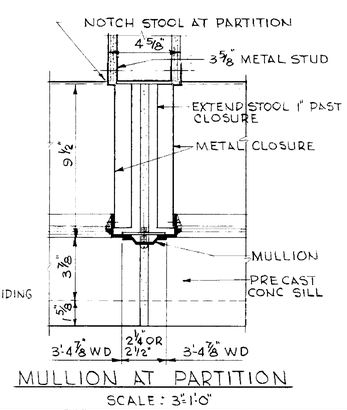

MULLION AT PARTITION
SCALE: 3"=1'-0"

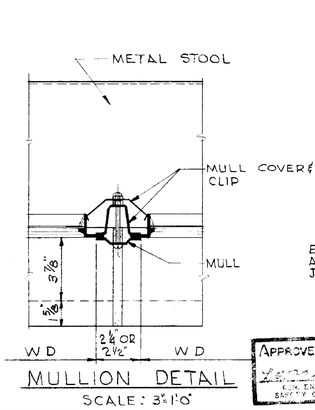

MULLION DETAIL
SCALE: 3"=1'-0"

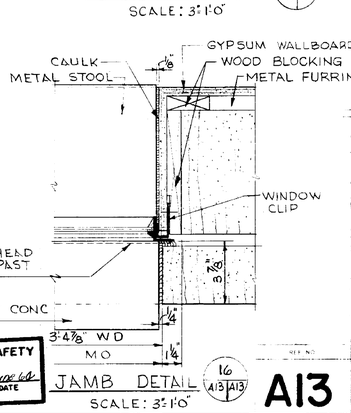

JAMB DETAIL
SCALE: 3"=1'-0"

Approved For Safety
Safety Office
Date

AS BUILT

1	9-8-12	REV DET	12092-8
NO.	BY	YEAR	CCN NO.

NATIONAL AERONAUTICS AND SPACE ADMINISTRATION — M S F C — HUNTSVILLE, ALABAMA

SANDERS & THOMAS INC. POTTSTOWN PA. WASH. D.C. MONT. ALA.

EXTENSION OF LOAD TEST ANNEX (BUILDING NO. 4619)

WINDOW DETAILS

NASA AE CONT NO. NAS8-1[illegible]14

DESIGNED	J.B.H.	APPROVAL RECOMMENDED	
DRAWN	R.D.	ARCHITECTURAL	
CHECKED	M.M.	DESIGN DATE	6-5-64
SCALE	AS NOTED	SEC. NO.	F&D-433

APPROVAL RECOMMENDED: R.S. Harnett, 12 MAY 64
APPROVED: K.A. Sanders, P.E., 6/15/64
CHIEF DESIGN BRANCH: [illegible] D. Harmon, 6-16-64

FILE NO. M S F C 8984
DRWG. NO. F&D-C-4619-A13

WEK NO. A13

4619

MSFC MASTER BID DISK 11-18-2013

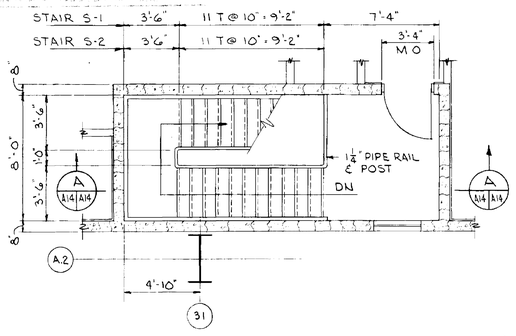

SECOND FLOOR PLAN STAIR S-1 (STAIR S-2 SIMILAR)

SCALE: ¼" = 1'-0"

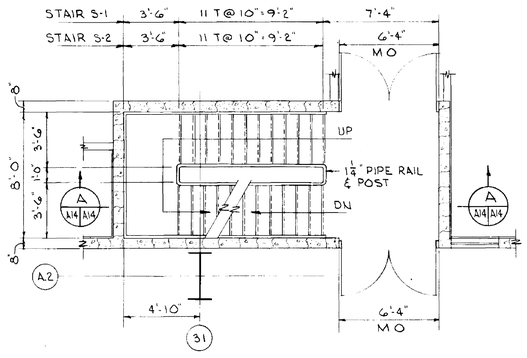

FIRST FLOOR PLAN STAIR S-1 (STAIR S-2 SIMILAR)

SCALE: ¼" = 1'-0"

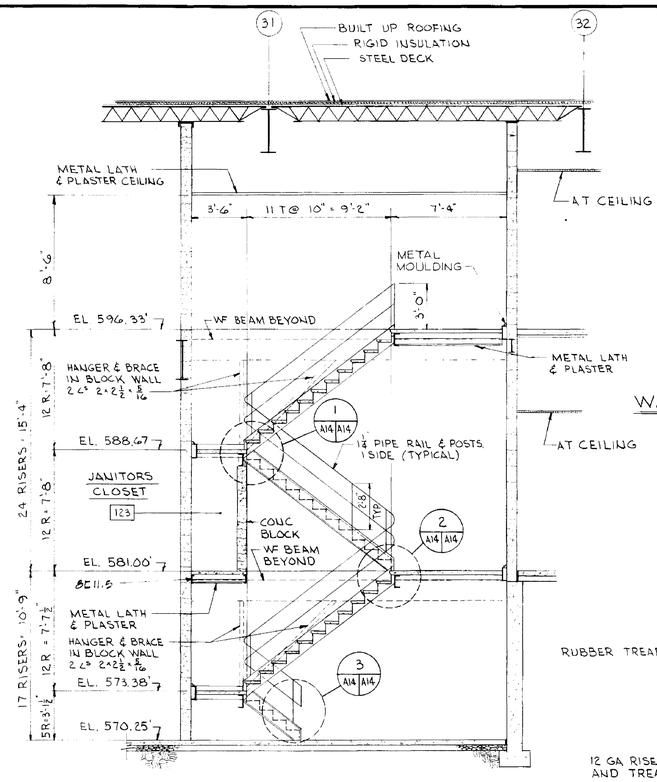

SECTION A A14/A14

SCALE: ¼" = 1'-0"

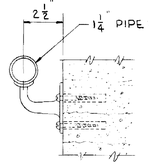

WALL BRACKET DETAIL

SCALE: 3" = 1'-0"

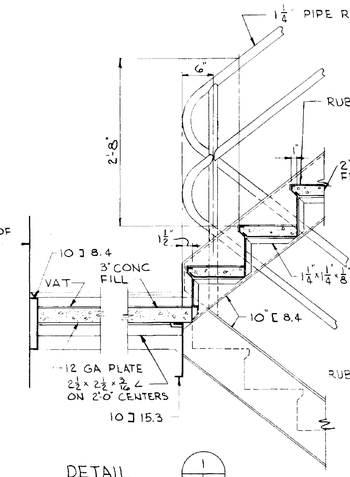

DETAIL 1 A14/A14

SCALE: 1" = 1'-0"

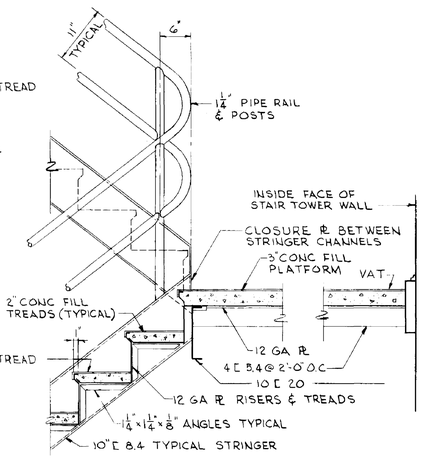

DETAIL 2 A14/A14

SCALE: 1" = 1'-0"

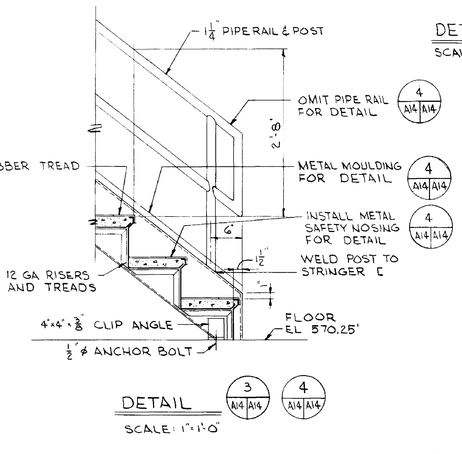

DETAIL 3 A14/A14 4 A14/A14

SCALE: 1" = 1'-0"

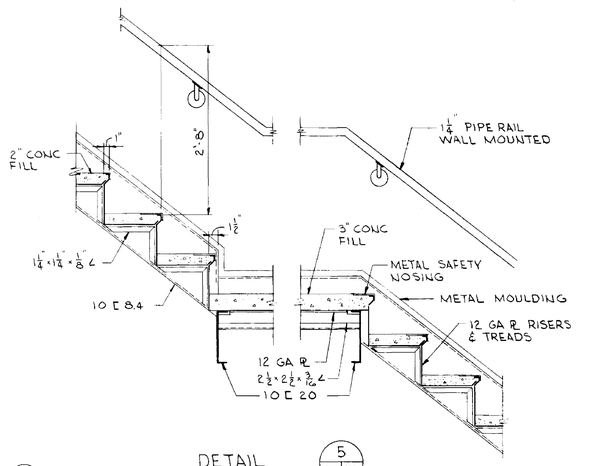

DETAIL 5 A14/A14

SCALE 1" = 1'-0"

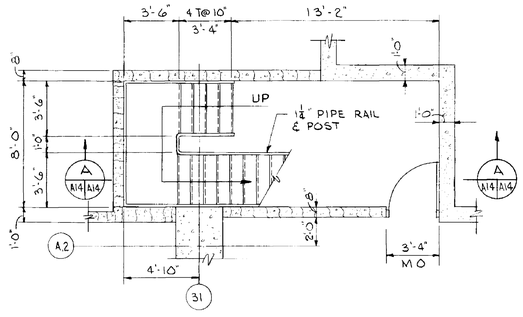

BASEMENT FLOOR PLAN STAIR S-1

SCALE: ¼" = 1'-0"

STAIR S-1

STAIR S-1 SHOWN, STAIR S-2 SIMILAR, FOR STAIR S-2 SEE DWG. A2

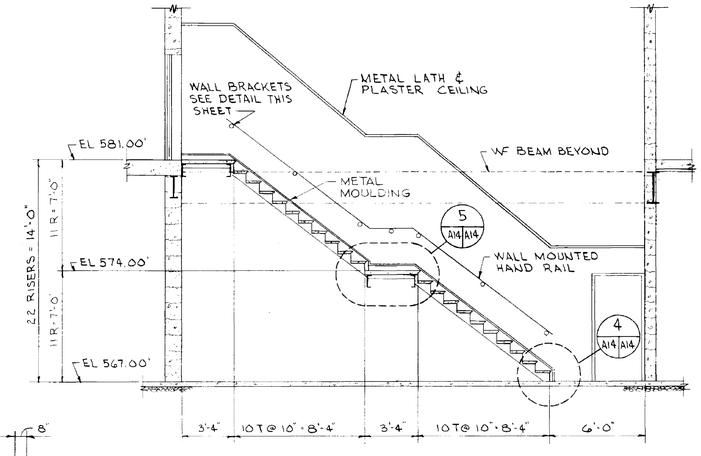

SECTION B A14/A14

SCALE ¼" = 1'-0"

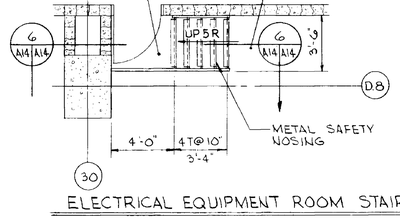

ELECTRICAL EQUIPMENT ROOM STAIR

SCALE: ¼" = 1'-0"

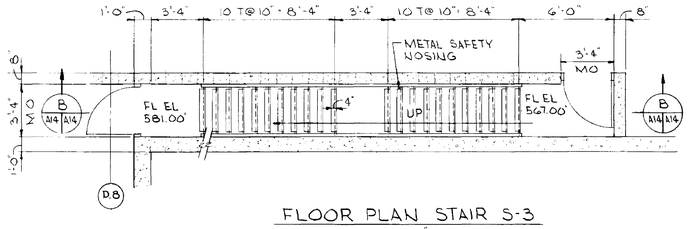

FLOOR PLAN STAIR S-3

SCALE: ¼" = 1'-0"

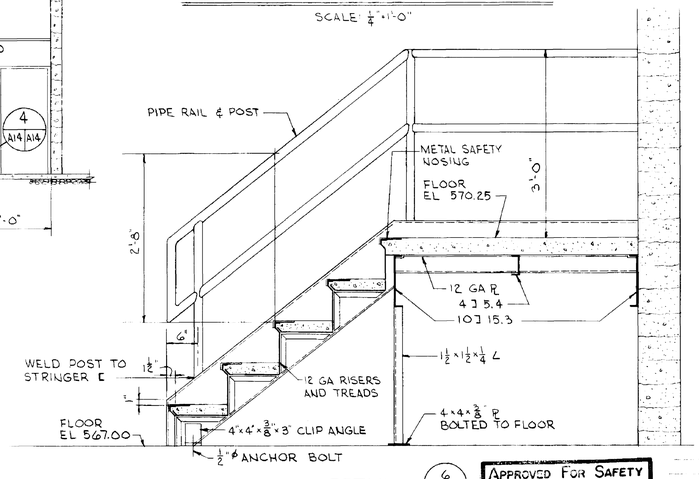

DETAIL 6 A14/A14

SCALE: 1" = 1'-0"

GENERAL NOTES:

1. METAL MOULDING TO BE INSTALLED ON SIDE ADJACENT TO WALL

APPROVED FOR SAFETY

DATE

NATIONAL AERONAUTICS AND SPACE ADMINISTRATION — M S F C — HUNTSVILLE, ALABAMA

SANDERS & THOMAS INC. POTTSTOWN PA. WASH. D.C. MONT. ALA.

EXTENSION OF LOAD TEST ANNEX (BUILDING NO. 4619)

STAIR PLANS, SECTIONS & DETAILS

DES. J.R.H.	APPROVED R.D. Barrett	NASA APPROVED	FILE NO. 8985
DR. K.W.	DATE 6/15/64	NASA CONT. NO. NAS8-014	
CH. M.M.	APPROVED Stanley D. Thomson for ARCHITECTURAL SECTION	DATE 6-16-64	
DATE 12 MAY 64	DATE 6-5-64	SPEC. F & D 433	DRWG. NO. F8D-C-4619-A14
SCALE AS NOTED			

A14

4619

MSFC MASTER BID DISK 11-18-2013

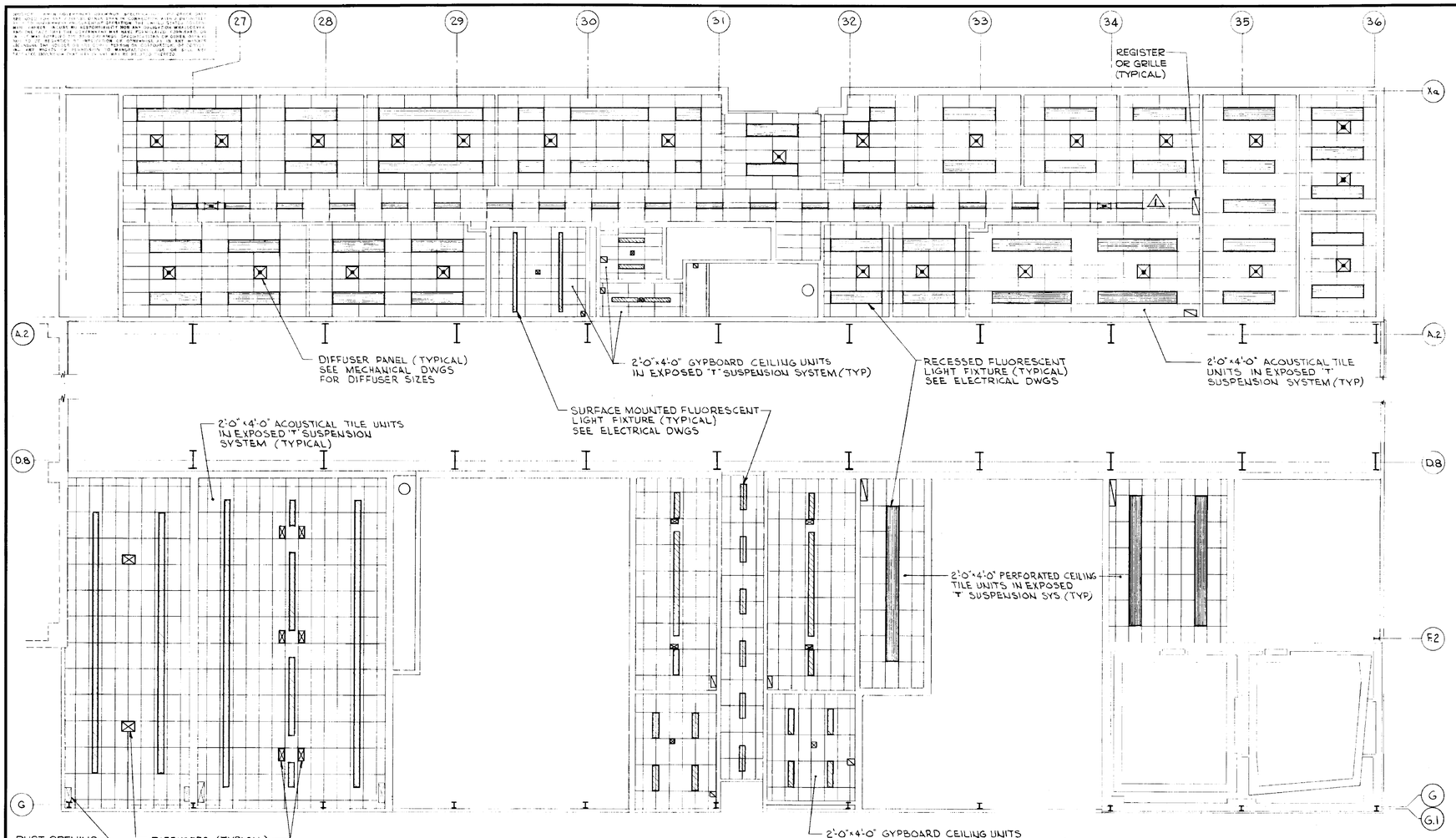

FIRST FLOOR REFLECTED CEILING PLAN

SCALE: $\frac{1}{8}$"=1'-0"

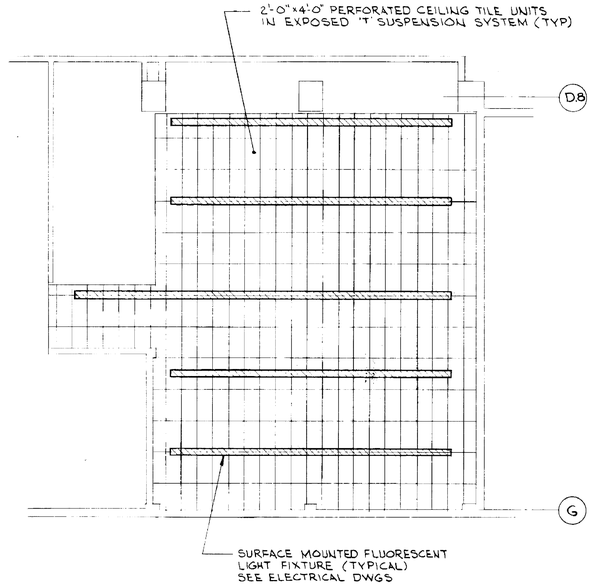

BASEMENT FLOOR REFLECTED CEILING PLAN

SCALE: $\frac{1}{8}$"=1'-0"

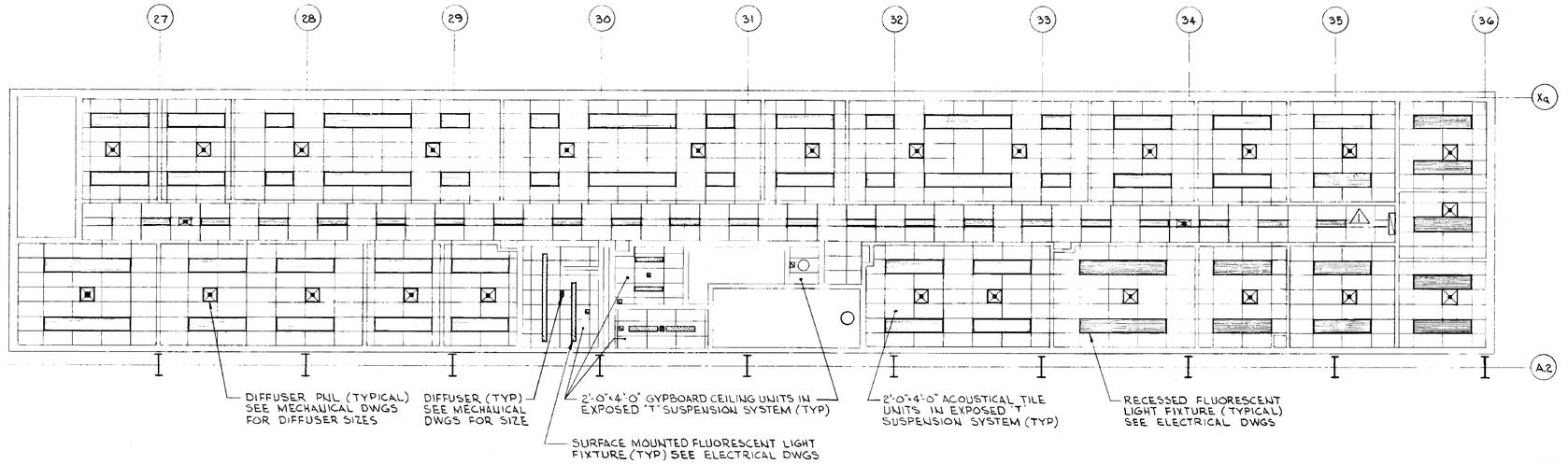

SECOND FLOOR REFLECTED CEILING PLAN

SCALE: $\frac{1}{8}$"=1'-0"

GENERAL NOTES

1 ALL ACOUSTICAL TILE CEILING PATTERNS SHALL BE WORKED FROM THE CENTER OF EACH ROOM OR CORRIDOR

2 ANCHOR TOP PLATE OF STEEL STUD PARTITIONS TO CEILING SUSPENSION SYSTEM TO PROVIDE LATERAL SUPPORT

⚠ DP 7-9-64 REVISED CORRIDOR LIGHTING		G.H.	
NATIONAL AERONAUTICS AND SPACE ADMINISTRATION		M S F C HUNTSVILLE ALABAMA	
SANDERS & THOMAS INC. POTTSTOWN PA WASH D.C. MONT. ALA.			
EXTENSION OF LOAD TEST ANNEX (BUILDING NO. 4619)			
REFLECTED CEILING PLANS			
NASA CONT NO NAS 8-2314		FILE NO M S F C	8986
DESIGNED H.A. Sanders DT	APPROVED WELDING NOT REQ'D R.J. Harnett	APPROVED CHIEF DESIGN BRANCH	
DRAWN 12 MAY 64	LAB DATE 6/15/64	ASST DATE	
TRACED J.R.H.	APPROVAL RECOMMENDED	DRWG. NO.	
CHECKED K.W. M.M.	DESIGN DATE 6-5-64	F&D-C-4619-A15	
SCALE 1/8"=1'-0"	SPEC NO F & D 433		

APPROVED FOR SAFETY — DATE 15 June 64

A15

4619

MSFC MASTER BID DISK 11-18-2013

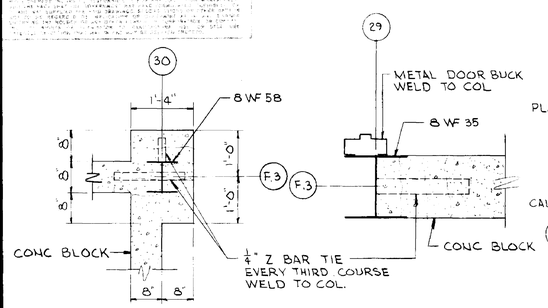

DETAIL 1 A1 A16

SCALE: ¾"=1'-0"

DETAIL 2 A1 A16

SCALE: 1½"=1'-0"

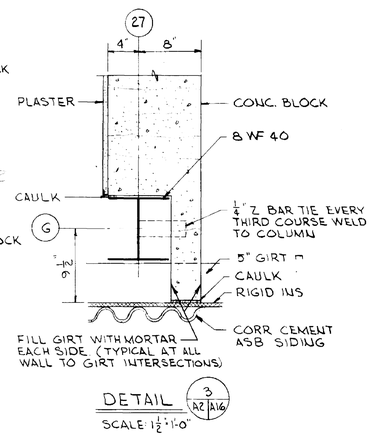

DETAIL 3 A2 A16

SCALE: 1½"=1'-0"

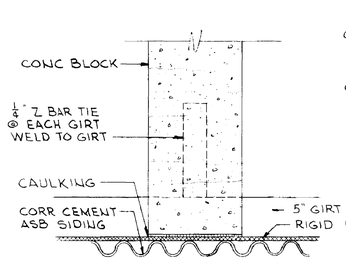

TYPICAL DETAIL 4 A2 A16

SCALE: 1½"=1'-0"

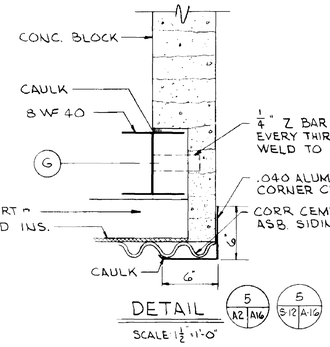

DETAIL 5 A2 A16 5 5-12 A-16

SCALE: 1½"=1'-0"

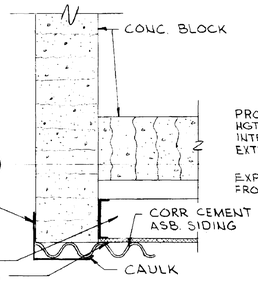

DETAIL 6 A2 A16

SCALE: 1½"=1'-0"

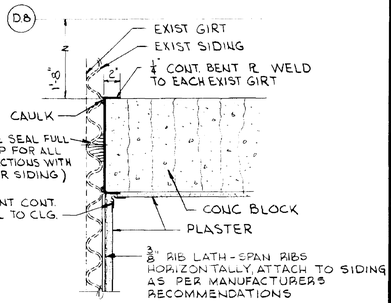

DETAIL 7 A2 A16

SCALE: 1½"=1'-0"

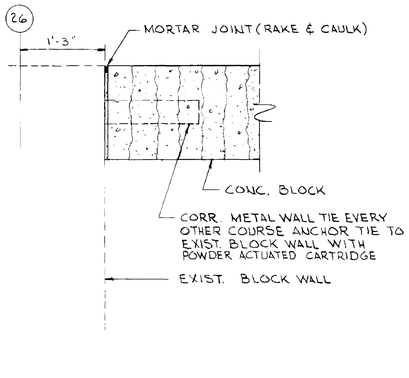

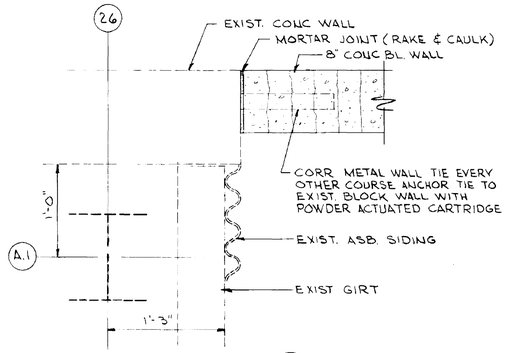

DETAIL 8 A2 A16

SCALE: 1½"=1'-0"

DETAIL 9 A2 A16

SCALE: 1½"=1'-0"

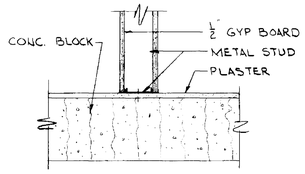

TYPICAL INTERSECTION OF STUD PARTITION TO CONCRETE BLOCK

SCALE: 1½"=1'-0"

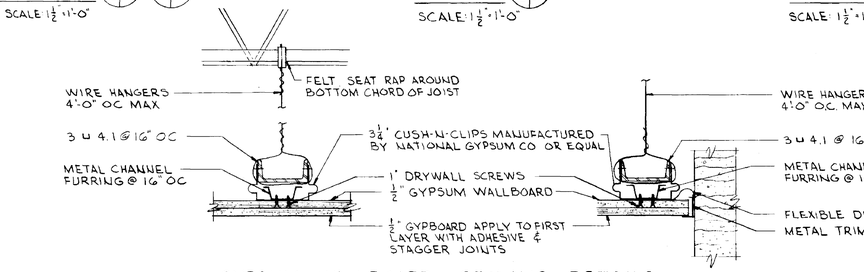

GYPSUM WALLBOARD CEILING DETAILS FOR ANECHOIC AND REVERBERANT ROOMS

SCALE 3"=1'-0"

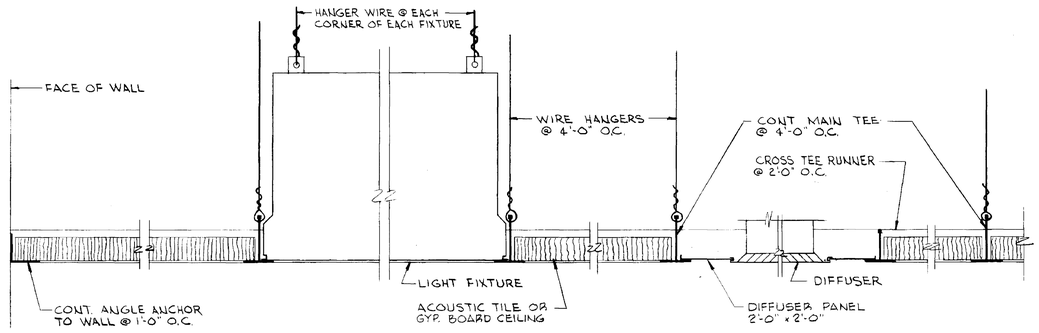

ACOUSTICAL TILE CEILING DETAIL

SCALE 6"=1'-0"

NOTE:

ANCHOR TOP PLATE OF STEEL STUD PARTITIONS TO CEILING SUSPENSION SYSTEM TO PROVIDE LATERAL SUPPORT.

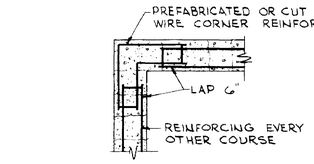

JOINT REINFORCING AT CORNERS

SCALE ¾"=1'-0"

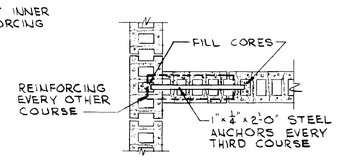

TYPICAL DETAIL AT INTERSECTING WALLS

SCALE ¾"=1'-0"

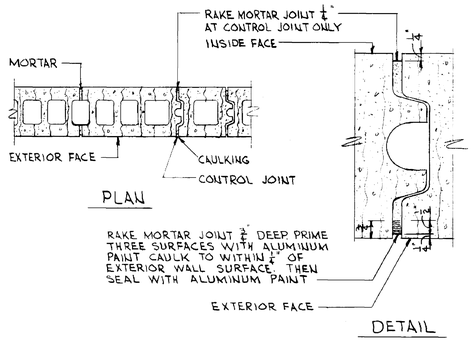

TYPICAL EXTERIOR WALL USING CONTROL JOINT BLOCK

NO SCALE

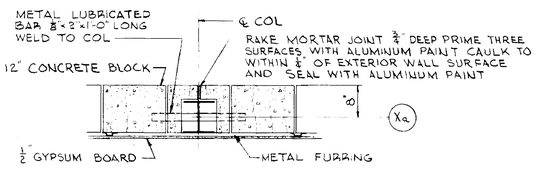

TYPICAL CONTROL JOINT AT COLUMN ALONG NORTH WALL

SCALE: ¾"=1'-0"

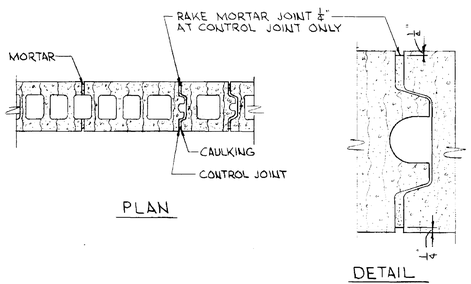

TYPICAL INTERIOR WALL USING CONTROL JOINT BLOCK

NO SCALE

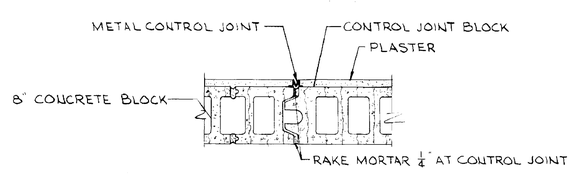

TYPICAL CONTROL JOINT DETAIL AT INTERIOR PLASTERED WALL

SCALE: 1½"=1'-0"

ELEVATION

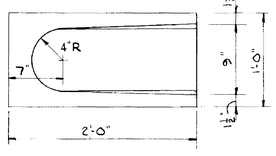

PLAN

PRECAST CONCRETE SPLASHBLOCK

SCALE: 1½"=1'-0"

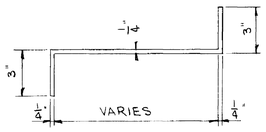

TYPICAL Z BAR DETAIL

SCALE 3"=1'-0"

APPROVED FOR SAFETY

15 JUNE 64

DATE

A16

NATIONAL AERONAUTICS AND SPACE ADMINISTRATION — M S F C — HUNTSVILLE, ALABAMA

SANDERS & THOMAS, INC. POTTSTOWN PA. WASH. D.C. MONT. ALA.

EXTENSION OF LOAD TEST ANNEX (BUILDING NO. 4619)

MISCELLANEOUS DETAILS

NASA AE CONT. NO. NAS8-1201

FILE NO. 8987

SUBMITTED: J.A. Sanders P.E. — APPR. AS RECOMMENDED: R.L. Harnett — APPROVED: Robert D. Cameron

DATE: 12 MAY 64 — DATE: 6/15/64 — NASA DATE: 6-16-64

DRAWN: J.R.H. — CHKD: K.W. — QTY. CHKD: M.M

APPROVED: Chief Architectural Section — DESIGN DATE: 6-5-64

SCALE: AS NOTED — SPEC NO. F&D 433

DRWG. NO. F&D-C-4619-A16

4619

MSFC MASTER BID DISK 11-18-2013

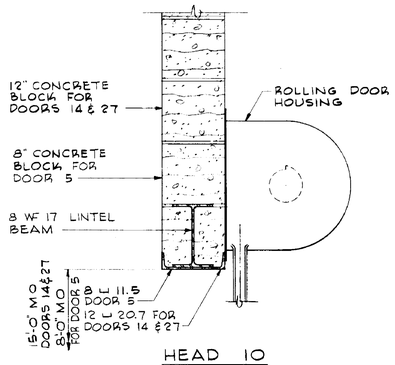

HEAD 10

SCALE 1½"=1'-0"

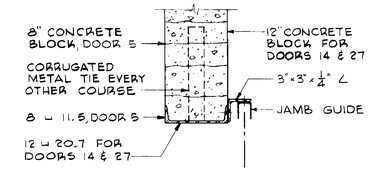

JAMB 10

SCALE 1½"=1'-0"

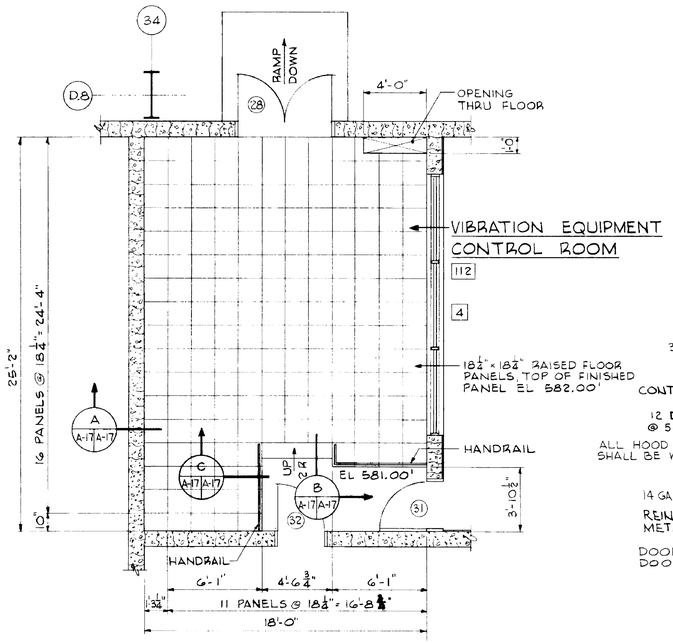

CONTROL ROOM PLAN

SCALE ¼"=1'-0"

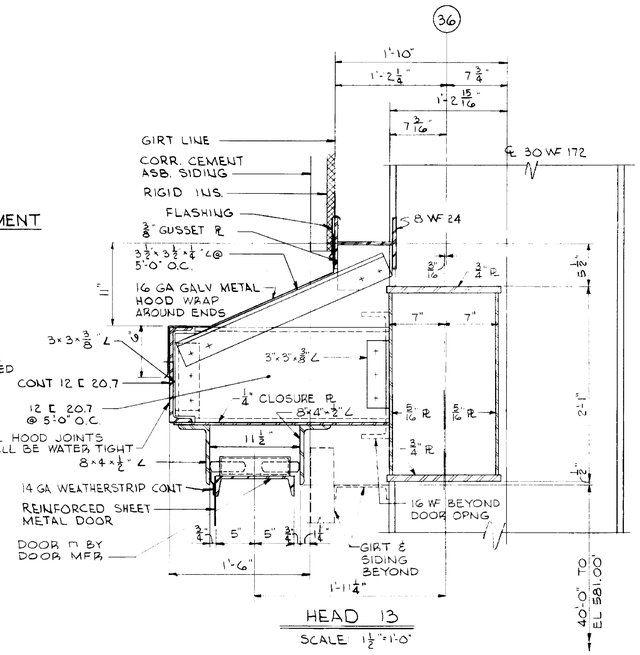

HEAD 13

SCALE 1½"=1'-0"

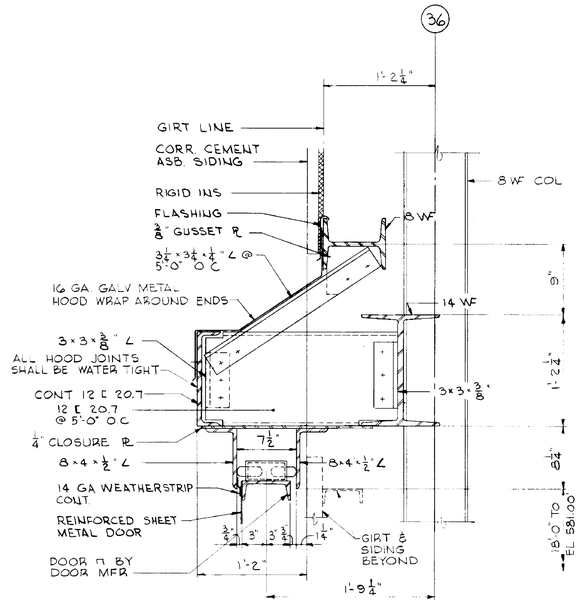

HEAD 12

SCALE: 1½"=1'-0"

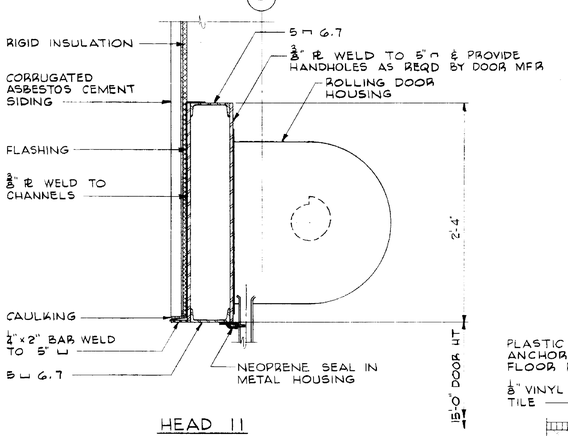

HEAD 11

SCALE 1½"=1'-0"

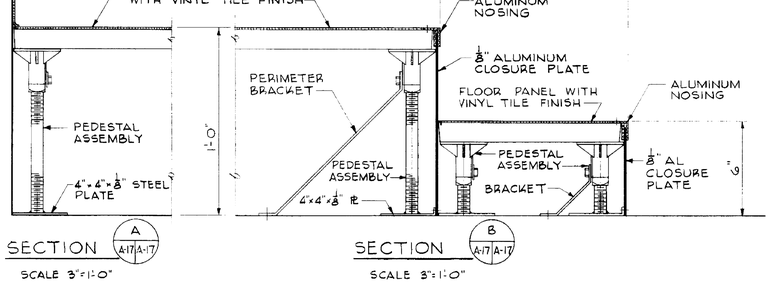

SECTION A A-17 A-17

SCALE 3"=1'-0"

SECTION B A-17 A-17

SCALE 3"=1'-0"

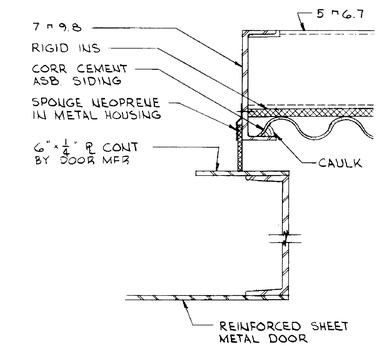

JAMB 12

SCALE 3"=1'-0"

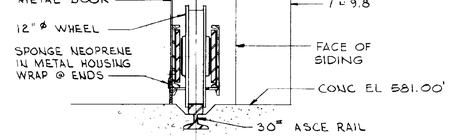

SILL 12

SCALE: 1½"=1'-0"

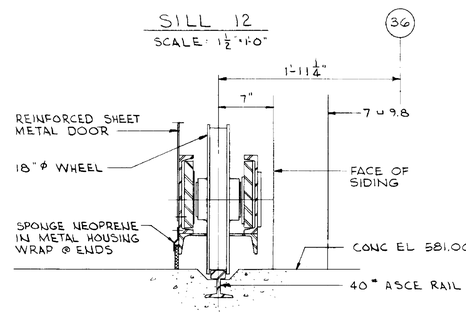

SILL 13

SCALE: 1½"=1'-0"

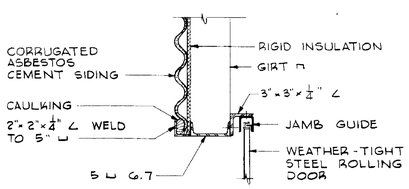

JAMB 11

SCALE 1½"=1'-0"

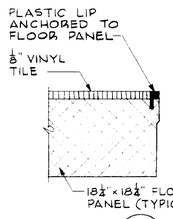

DETAIL 1 A-17 A-17

SCALE - FULL SIZE

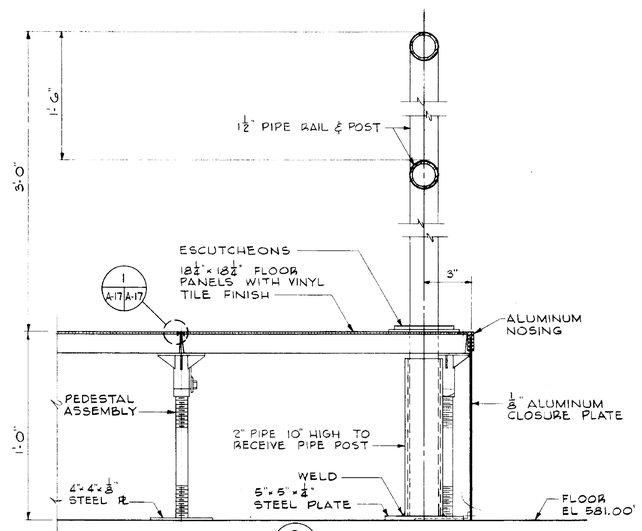

SECTION C A-17 A-17

SCALE 3"=1'-0"

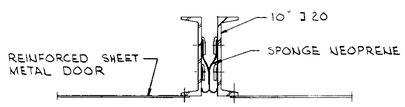

MEETING RAIL DETAIL DOOR 34

SCALE: 1½"=1'-0"

APPROVED FOR SAFETY

Gilbert Noyes 15 MAY 64

BEN. F/SQN. SAFETY OFFICE — DATE

NATIONAL AERONAUTICS AND SPACE ADMINISTRATION — M S F C — HUNTSVILLE ALABAMA

SANDERS & THOMAS INC. POTTSTOWN PA. WASH. D.C. MONT. ALA.

EXTENSION OF LOAD TEST ANNEX (BUILDING NO. 4619)

MISCELLANEOUS DETAILS

NASA AE CONT. NO. NAS8-12014		FILE NO. M S F C
SUBMITTED: W.A. Sanders P.E.	APPROVAL RECOMMENDED: R.L. Garrett	APPROVED: Robert D. Glasscock
SUBMITTED: 12 MAY 64	LAR DATE 6/17/64	CHIEF DESIGN BRANCH NASA DATE 6-16-64
DESIGNED J.R.H. DRAWN J.R.H. TRACED M.L.M.	APPROVAL RECOMMENDED: Grady D. Harmon Jr. CHIEF ARCHITECTURAL SECTION DESIGN DATE 6-5-64	DRWG NO. F8D-C-4619-A17
SCALE AS NOTED	SPEC NO. F 8 D - 453	

A17

MSFC MASTER BID DISK 11-18-2013

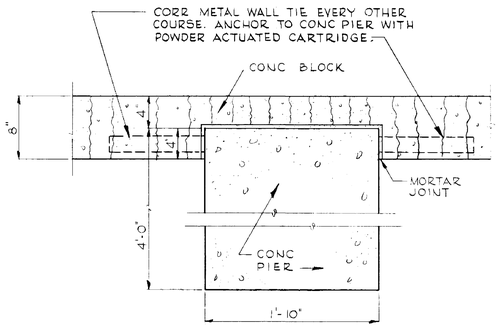

DETAIL 1 (A-1 | A-18)

SCALE: 1½" = 1'-0"

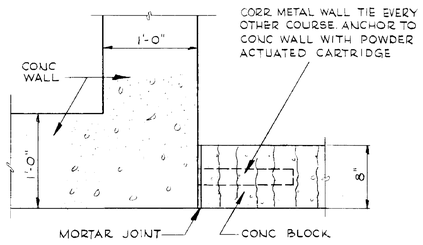

DETAIL 2 (A-1 | A-18)

SCALE: 1½" = 1'-0"

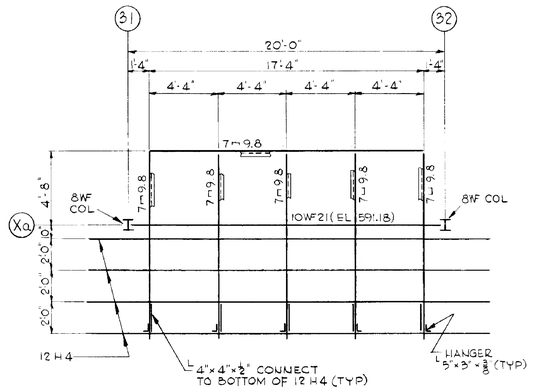

FRAMING PLAN FOR CANOPY

SCALE: ¼" = 1'-0"

EL 590.21' TOP OF ALL 7T9.8

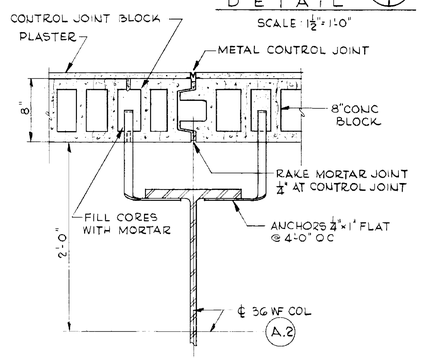

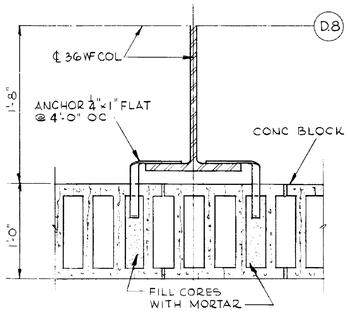

TYPICAL DETAILS OF ANCHORING CONCRETE BLOCK WALLS TO COLUMNS

SCALE: 1½" = 1'-0"

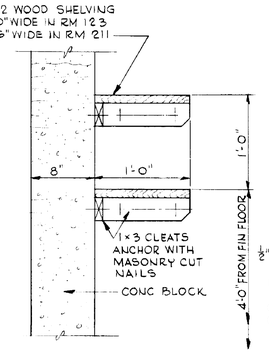

SHELVING DETAILS FOR JANITORS CLOSET

SCALE: 1½" = 1'-0"

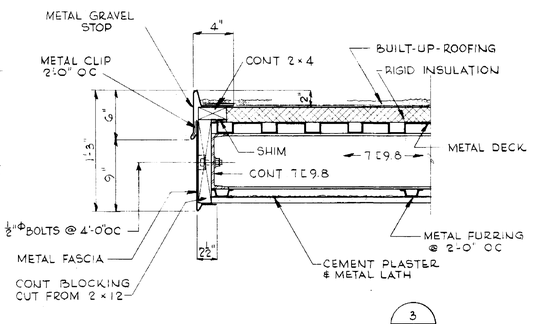

DETAIL 3 (A-18 | A-18)

SCALE: 1½" = 1'-0"

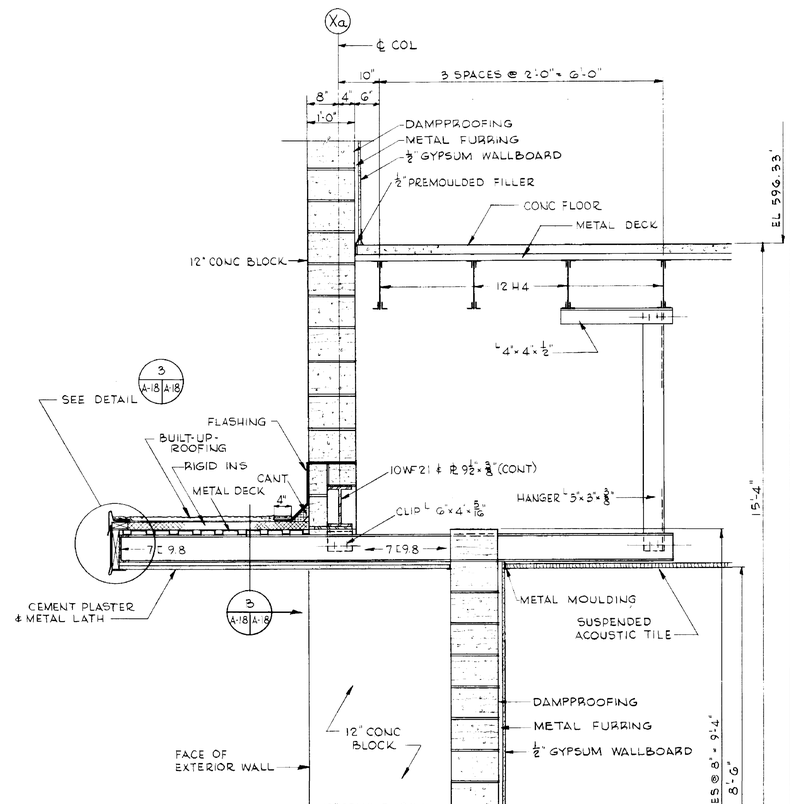

SECTIONS

SCALE: ¾" = 1'-0"

A A-2 A-18 | A A-3 A-18 | A 511 A-18

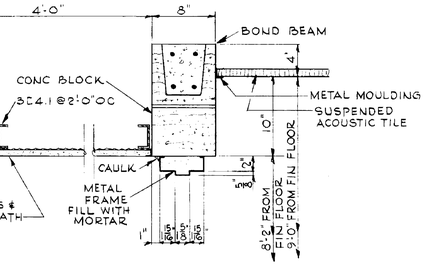

SECTION C (A-2 | A-18)

SCALE: 1½" = 1'-0"

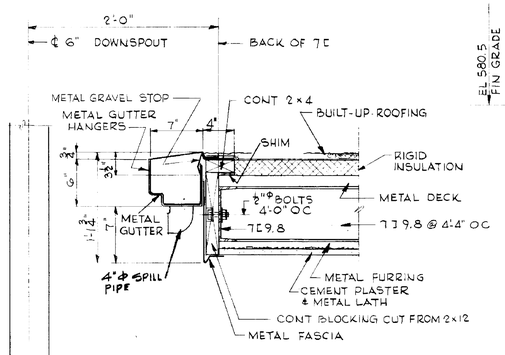

NOTE GUTTER TYP EACH END OF CANOPY

SECTION B (A-18 | A-18)

SCALE: 1½" = 1'-0"

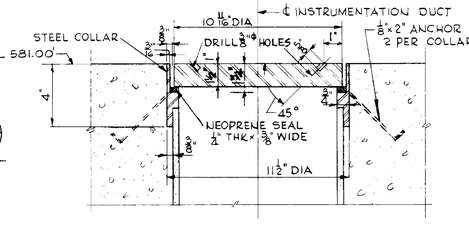

TYPICAL DETAIL OF INSTRUMENTATION DUCT COVER

SCALE: 3" = 1'-0"

APPROVED FOR SAFETY
Lt. D. D. Boyce 15 June 64
BGN ENGR. SAFETY OFFICE
DATE

NATIONAL AERONAUTICS AND SPACE ADMINISTRATION — M S F C — HUNTSVILLE, ALABAMA

SANDERS & THOMAS, INC. POTTSTOWN PA · WASH. D.C. · MONT. ALA.

EXTENSION OF LOAD TEST ANNEX (BUILDING NO. 4619)

MISCELLANEOUS DETAILS

NASA AF CONT. NO. NAS 8-12014

DESIGNED J.B.H. DRAWN M.B.H. CHECKED W.L.M. SCALE AS NOTED

INITIALS: H.A. Sanders, P.E. DATE 12 MAY 64

APPROVED RECOMMENDED: R.L. Barrett DATE 6/15/64

APPROVAL RECOMMENDED: Hardy D. Harmon, C.E. Mechanical Section, DATE 6-5-64

SPEC NO. F.B.D. 433

APPROVED: Robert D. Clarke, CHIEF DESIGN BRANCH, NASA DATE 6-16-64

DRWG. NO. F8D-C-4619-A18

A 18

4619

MSFC MASTER BID DISK 11-18-2013

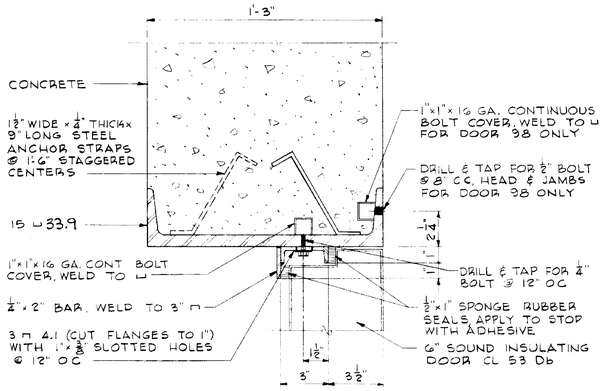

HEAD & JAMB 14

SCALE 3"=1'-0"

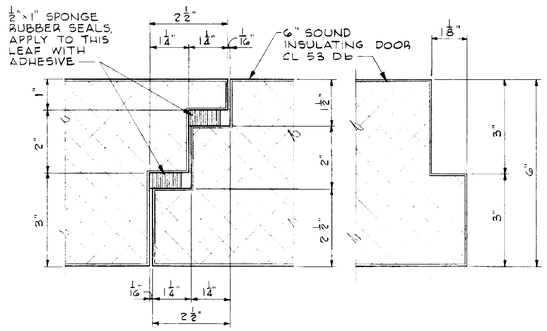

ASTRAGAL SEAL FOR DOORS 97, 98 & 101

SCALE 6"=1'-0"

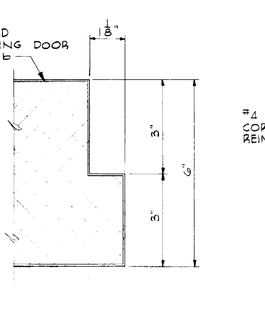

EDGE SEAL FOR DOORS 33, 97, 98, 100 & 101

SCALE 6"=1'-0"

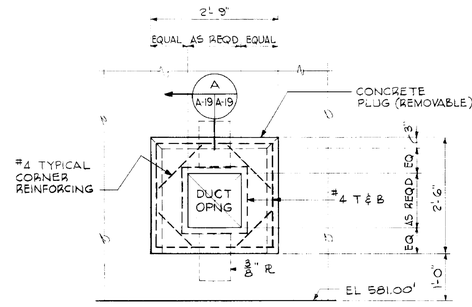

ROOM SIDE

CONC PLUG ELEVATION

SCALE ¾"=1'-0"

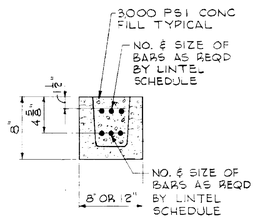

LINTEL BLOCK DETAIL

NO SCALE

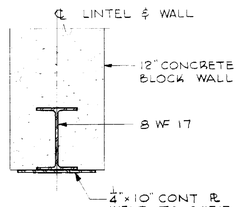

STEEL LINTEL DETAIL

SCALE ½"=1'-0"

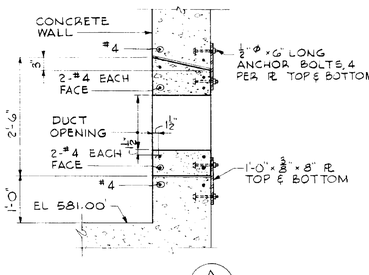

SECTION A A-19 A-19

SCALE ¾"=1'-0"

LINTEL SCHEDULE					
WALL THK	OPENING WIDTH	LINTEL TYPE	REINFORCING TOP	REINFORCING BOTTOM	REMARKS
8"	0" TO 6'-0"	BLOCK	2-#4	2-#4	8" MIN BEARING - SEE DETAIL ABOVE
12"	0" TO 6'-0"	BLOCK	3-#4	3-#4	8" MIN BEARING - SEE DETAIL ABOVE
8"	6'-0" TO 8'-6"	BLOCK	2-#4	2-#6	8" MIN BEARING - SEE DETAIL ABOVE
12"	6'-0" TO 8'-6"	BLOCK	3-#4	3-#6	8" MIN BEARING - SEE DETAIL ABOVE
12"	OVER 8'-6"	STEEL	-	-	8" MIN BEARING - SEE DETAIL ABOVE

LINTEL NOTES

1. LINTEL SCHEDULE ABOVE APPLIES TO ALL OPENINGS NOT DETAILED OR OTHERWISE SHOWN.
2. LINTELS SHALL BE PROVIDED ABOVE ALL DOORS, DUCT OPENINGS, INTERIOR WINDOWS, ELECTRICAL PANELS AND CABLE TRAYS OR OTHER OPENINGS AS REQUIRED.
3. FOR LINTELS ABOVE EXTERIOR WINDOWS SEE DETAILS ON DRAWING A-13.

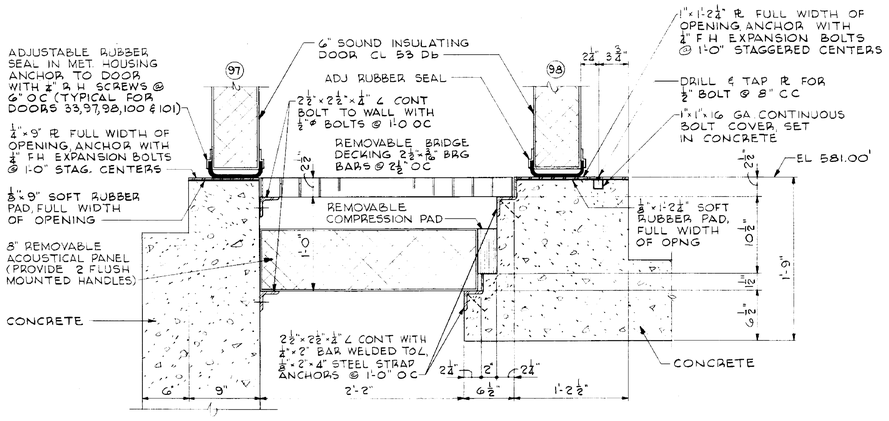

SILL 14

SCALE 1½"=1'-0"

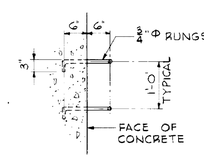

PLAN

SECTION

NOTE:
SEE DWG NO. S-16 FOR LOCATION OF LADDER RUNGS

TYPICAL LADDER DETAILS

SCALE ¾"=1'-0"

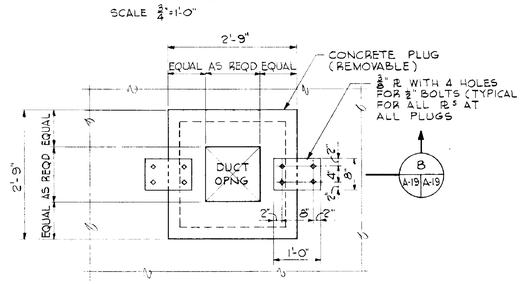

CONCRETE CEILING PLUG PLAN

SCALE ¾"=1'-0"

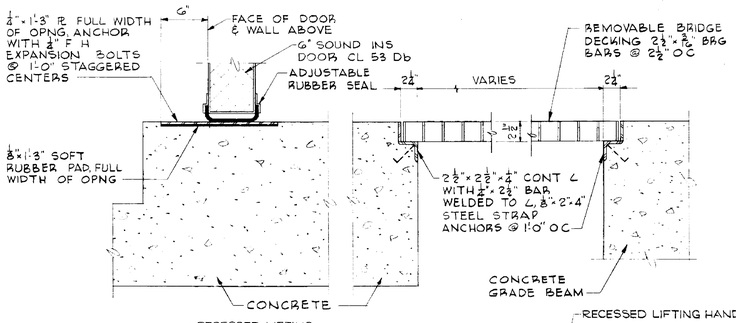

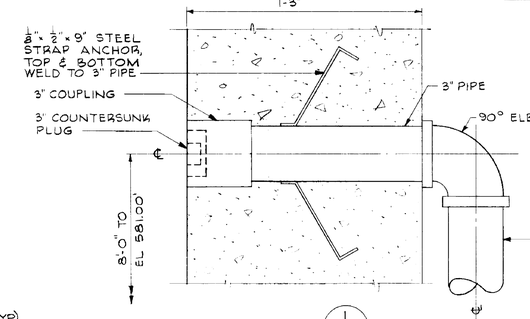

DETAIL 1 S-16 A-19

SCALE 3"=1'-0"

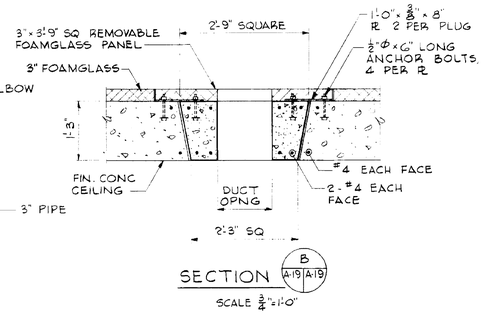

SECTION B A-19 A-19

SCALE ¾"=1'-0"

SILL 15

SCALE 1½"=1'-0"

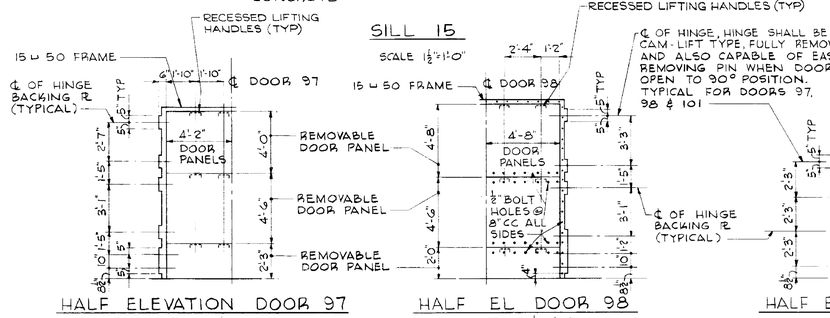

HALF ELEVATION DOOR 97

SCALE ½"=1'-0"

HALF EL DOOR 98

SCALE ½"=1'-0"

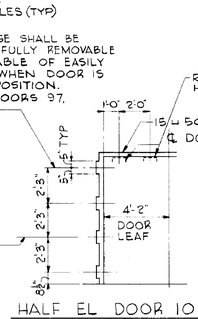

HALF EL DOOR 101

SCALE ½"=1'-0"

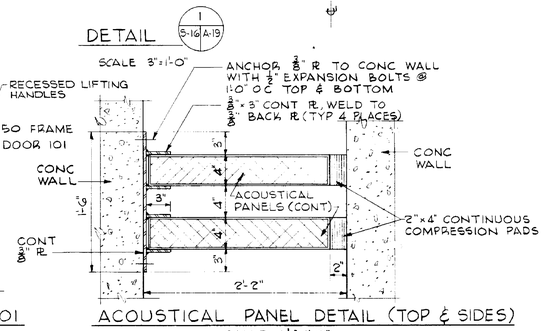

ACOUSTICAL PANEL DETAIL (TOP & SIDES)

SCALE 1½"=1'-0"

APPROVED FOR SAFETY
DATE

A19

NATIONAL AERONAUTICS AND SPACE ADMINISTRATION			M S F C HUNTSVILLE, ALABAMA
SANDERS & THOMAS INC. POTTSTOWN, PA. WASH. D.C. MONT. ALA.			
EXTENSION OF LOAD TEST ANNEX (BUILDING NO. 4619)			
MISCELLANEOUS DETAILS			
NAME OF CONST. NO. NASA 12014			
DES. BY: Washington, D.C.	DRN. BY: R.A. Harrett	CHK. BY: Robert D. Thomas Jr.	
DATE: 12 MAY 64	DATE: 6/15/64	DATE: 6-16-64	
SCALE: J.P.H. J.P.H. M.M. AS NOTED	APPROVED BY: Bradley D. Harmon ARCHITECT-ENGINEER DATE 6-5-64	DRAWING NO. S-D-453	F&D-C-4619-A19

4619

MSFC MASTER BID DISK 11-18-2013

DETAIL "M"
No Scale

SECTION B-B
NO SCALE

DETAIL "N"
SCALE: 3/4" = 1'-0"

SECTION A C1 C1
NO SCALE

DETAIL "P"
SCALE: 1/2" = 1'-0"

SITE PLAN
SCALE: 1" = 30'-0"

LOAD TEST ANNEX
FIN. FL. 581.00'

EXTENSION TO LOAD TEST ANNEX

FIN. FIRST FL. EL. 581.00

RAMP

EXIST. ROAD

FUTURE ROAD

EXIST. 62'-0" CANTILEVERED GATE

LEAD SHOT STORAGE TANKS (NIC)

1000 GAL PROPANE STORAGE TANKS (NIC)

HYDRAULIC LIFT

ELEC SUBSTATION
PAD EL 581.0
SEE DWG. E1

GROUND WELL
SEE DWG. E9

COOLING TOWER
SEE DWG. M2

EXIST. M.H.
SEE DETAIL ON DWG. C2

RELOCATED F.H.

RELOCATE EXIST. F.H.

GUYS (NIC)

Existing Asphalt Road

Existing Temp. Fence To be Relocated.

(See Note 4) — Relocated Temp. Fence

Existing Temp. Fence See Note 4.

CONNECT PIPE TO TOP OF 24" SD

Conc. Encase S.S. Pipe to MH. 8. See Detail "M"

PROVIDE BELL ON 8" PIPE 6" ABOVE GRADE
2-6" Gate Leaves

REMOVE EXIST. PAVEMENT

MATCH EXIST PAVEMENT GRADES

MATCH EXIST PAVEMENT GR

SEE NOTE 1

SEE NOTE 5

CONNECT TO EXIST M.H. INV. 577.00

CONNECT TO EXIST POTABLE WATER EXIST. M.H.

CONNECT TO EXIST MANHOLE

3" SUMP PUMP DISCHARGE

See Detail "P"

Type D M.H. Inv. 574.00 See Std. Dwg. 905

3-4"ϕ Underground Conc. Encased Conduits See Dwg. E-11.

Bot. of Duct El 570.33

Bot. of Duct El 563.64

Bot. of Duct El 569.00

Comm. Duct

Comm. M.H. Top 581.00 Inv 567.90

FUTURE CONC. PAD (BY OTHERS)

FUTURE PAVING LIMITS (BY OTHERS)

WORK AREA OUTLINE FOR TEST PAD. (SEE NOTE 7)

Install Fence Along Gate Frame.

Remove Ring Wall To Be Removed.

NEW HEADWALL T.E. INV. 577.83 575.00

24'± - 15"ϕ @ 0.4%

36" C.M. Pipe

48" x 96" C.M. Pipe

TERMINATE 4" MIN. ABOVE GRADE

4" C.I. I.W. PIPE

2'-1/2"-4" CONC. PAD.

FLANGE 4" ABOVE CONC.

Install Flush with Top of Inlet

90° L.R. ELL.

S.D. INLET

F.F. EL 581.00 = TOP GB3

G.B. 3

4" I.W. PIPE SEE NOTE 9

SUBSTATION

FIN. GR.

EL. 581.00

EXIST. GR.

For Typical Road Section See Dwg. C-2.

N 1,509,000

N 1,508,750

N 1,508,500

E 248,000

E 248,250

E 248,500

LEGEND

EXISTING	NEW
FENCE - TYPE FEG 7'-0" HEIGHT	
INDUSTRIAL WATER	GATE VALVE & BOX
POTABLE WATER	GATE VALVE
STORM DRAIN	INLET, HEADWALL
SANITARY SEWER	M.H.
UNDERGROUND STEAM	ANCHOR
ELECTRICAL POLE	GUY, PP
BUILDING	
PAVEMENT	
CONTOURS	580
580.0 TO REMAIN	SPOT ELEVATIONS 580.00
PUMPED CONDENSATE RETURN (UNDERGROUND)	ANCHOR
SANITARY SEWER FORCE MAIN	
TELEPHONE DUCT	
UNDERGROUND ELECTRICAL	
NEW CONCRETE WALK	
PROPANE (UNDERGROUND)	
LOCATION OF DRILL HOLES	

NOTES:

1. TAPPING, SLEEVE, VALVE & BOX MATERIALS SHALL BE FURNISHED BY THE CONTRACTOR. TAP WILL BE BY THE GOVERNMENT.
2. ALL EXISTING PAVEMENT DISTURBED DURING CONSTRUCTION SHALL BE REPLACED.
3. FOR DETAILS SEE DWG. C2.
4. THE TEMPORARY FENCE SHALL BE REMOVED UPON INSTALLATION OF THE PERMANENT FENCE.
5. THE EXIST GROUNDING WELL SHALL BE REMOVED & THE GROUND WIRE PROTECTED. SEE DWG. E-9.
6. ABOUT 596 FEET OF PERMANENT FENCE WILL BE FURNISHED THE CONTRACTOR FOR INSTALLN.
7. The Contractor shall remove all construction material and shall terminate all construction, except communication line, within the work area outlined for Conc. Test Pad.
8. The communication duct installation shall be coordinated with Contractor for Test Pad if the Test Pad Contractor is in the work area prior to duct installation.
9. CUT HOLES IN CONCRETE BLOCK BASEMENT WALL 2" LESSER IN DIAMETER THAN PIPE. INSTALL 4" I.W. PIPE AND TAP WITH BLIND FLANGE 6" FROM INSIDE SURFACE OF WALL. SPAN 3" ON BOTH SIDES. 2" OF OAKUM ON BOTH SIDES OF WALL WITH 1" OF MASTIC CAULKING COMPOUND ON BOTH SIDES OF WALL AS SPECIFIED IN SECTION 7E OF CONTRACT SPECIFICATIONS. GROUND SIDE OF WALL AND PIPE SHALL BE GIVEN A FINAL COAT OF ASPHALT OR COAL TAR PRIMER.

APPROVED FOR SAFETY
GEN. CHIEF SAFETY OFFICE — DATE

C1

4	J.T.H.	12-3-64	Added 4" I.W. Line.	12-7-64	J.T.H.
3	J.B.H.	11-19-64	Revised Grading, Storm Drainage, Conn. Duct & Water Line & Work Place.	12-7-64	J.T.H.
2	J.T.H.	10-26-64	Rev. S.S. Line & Added Conc. Encase.	11-19-64	J.T.H.
1	J.T.H.	10-20-64	Rev. Storm Drainage & Grading & Added Removal of Conc. Ring Wall.	12-7-64	J.T.H.
	BY	DATE	REVISION	DATE	APPROVED

NATIONAL AERONAUTICS AND SPACE ADMINISTRATION — M S F C — HUNTSVILLE, ALABAMA

SANDERS & THOMAS INC. POTTSTOWN, PA. WASH., D.C. MONT., ALA.

EXTENSION OF LOAD TEST ANNEX (BUILDING NO. 4619)

SITE PLAN

CONTRACT NO. NAS8-12014			DWG. NO. M S F C 8968
DESIGNED: Saunders, P.C. 12 MAY 64	APPROVAL RECOMMENDED: R.S. Harnett	APPROVED: Robert O. Cleaver, CHIEF DESIGN BRANCH	
DRAWN: S.H. CHECKED: S.H. TRACED: M.L.M.	APPROVED: [illegible] CHIEF, CIVIL DESIGN SECTION	DESIGN DATE: June 5, 1964	DRWG. NO. F8D-C-4619-C1
SCALE: AS NOTED	SPEC. NO. F8D-433		

MSFC MASTER BID DISK 11-18-2013

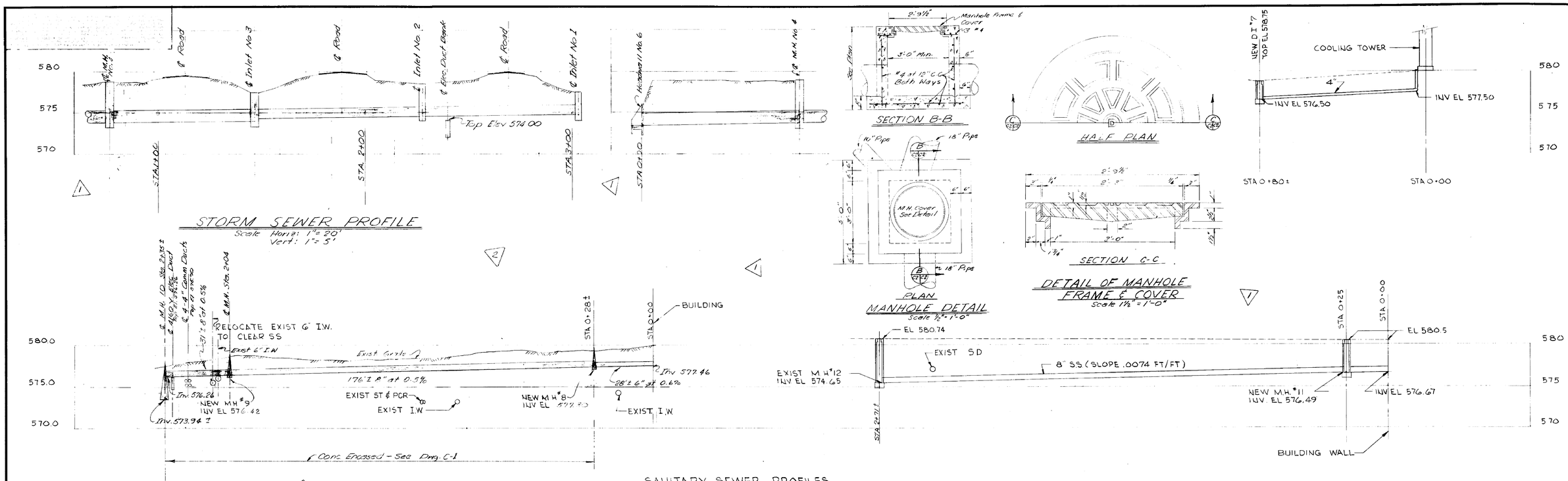

STORM SEWER PROFILE

Scale Horiz: 1" = 20'
Vert: 1" = 5'

SANITARY SEWER PROFILES

HORIZ SCALE 1"=20'-0"
VERT SCALE: 1"= 5'-0"

DETAIL OF MANHOLE FRAME & COVER

Scale 1 1/2" = 1'-0"

MANHOLE DETAIL

Scale 1/2" = 1'-0"

STORM DRAINAGE PIPE & STRUCTURE SCHEDULE

STRUCTURE FROM	STRUCTURE TO	APPROX LENGTH FEET	SMOOTH INTERIOR PIPE DIA IN	SMOOTH INTERIOR PIPE SLOPE %	SMOOTH INTERIOR PIPE INV. EL. DOWN STREAM	SMOOTH INTERIOR PIPE INV. EL. UP STREAM	SMOOTH INTERIOR PIPE CAGE C.M.	C.M. PIPE DIA IN	C.M. PIPE SLOPE %	C.M. PIPE INV. EL. DOWN STREAM	C.M. PIPE INV. EL. UP STREAM	C.M. PIPE GAGE	INLET, MANHOLES & HEADWALLS NO	TYPE	TOP EL	TYPE GRATE	REMARKS
1	2	75±	15	0.35	574.49	574.76	16	15	0.35	575.12	575.39	16	1	DI	577.50	F	
2	3	81±	15	0.35	574.21	574.49	16	15	0.85	574.42	575.12	16	2	D.I	578.50	F	
3	4	63±	18	0.35	573.72	573.96	16	18	0.70	573.72	574.18	16	3	DI	577.50	F	
COOLING TOWER	5	78±	4	1.31	576.50	577.50							4	M.H	578.80		
4	6	75±	18	0.35	573.43	573.72		18	0.70	573.19	573.72	16	5	DI	578.75	F	
													6	H/W	577.05		

TYPICAL SECTION THRU ROAD

NO SCALE

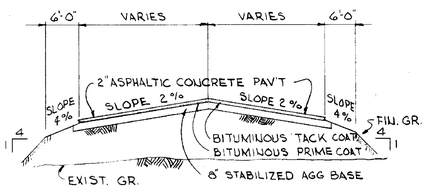

STEAM & CONDENSATE PROFILES

HORIZ SCALE: 1"=20'-0"
VERT SCALE: 1"= 5'-0"

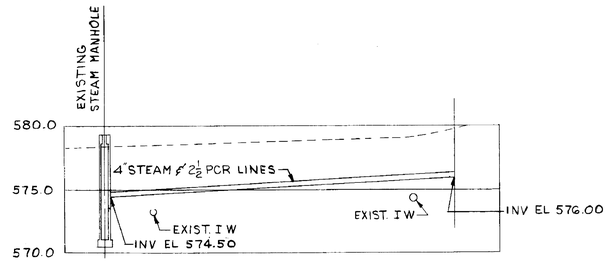

NOTES:

1. FOR ADDITIONAL DETAILS SEE DWGS. MSFC - STD - 900, 901 & 912.

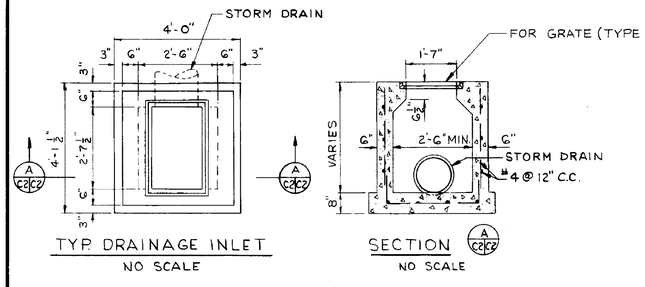

TYP. DRAINAGE INLET
NO SCALE

SECTION
NO SCALE

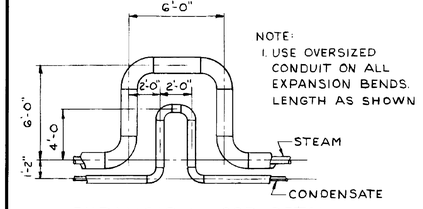

EXPANSION LOOP DETAIL
NO SCALE

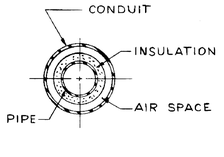

STEAM & CONDENSATE LINE DETAIL (UNDERGROUND)
NO SCALE

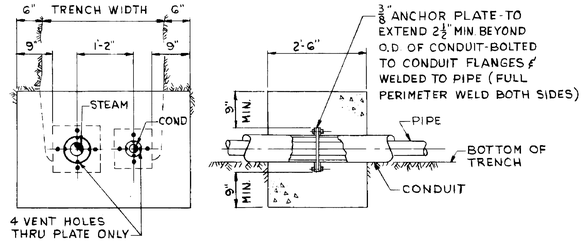

TYPICAL ANCHOR FOR STEAM & CONDENSATE LINES (UNDERGROUND)
NO SCALE

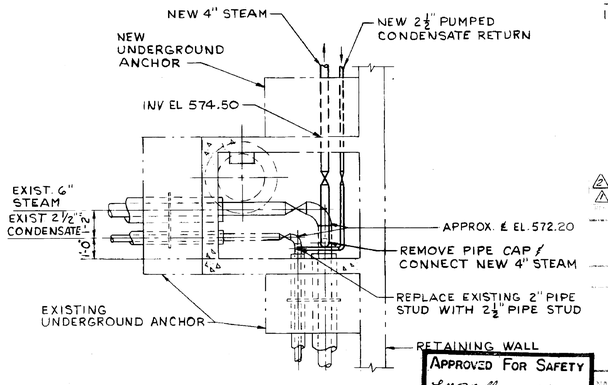

EXISTING STEAM MANHOLE
NO SCALE

2 J.T.A. 16 Dec 64 Revised S.S. Line & Mh Conc. Encasement 12.072-3
1 J.T.A. 31 Aug 64 Revised Storm Drainage 12.072-1

NATIONAL AERONAUTICS AND SPACE ADMINISTRATION — N S F C — HUNTSVILLE, ALABAMA

SANDERS & THOMAS, INC. POTTSTOWN, PA. MISS. CO. MONT. PA.

EXTENSION OF LOAD TEST ANNEX (BUILDING NO 4619)

PROFILES & DETAILS

APPROVED FOR SAFETY — SAFETY OFFICE — DATE

PLANS AT CONT. NO. NAS 8-12014			JOB NO. 8969
DESIGNED W.A. Sanders P.E.	DRAWN R.S. Harrell	CHECKED	SCALE AS NOTED
DATE 12 MAY 64	DATE 6/15/64	DATE	DATE 6-16-64
DESIGN SECTION CHIEF G.M. K.W. M.M.	DRAWING SECTION CHIEF	APPROVED	DRWG NO. F&D-C-4618-C2
DESIGN DATE June 5, 1964	DRWG NO. F&D-433		

C2

4 of 9

MSFC MASTER BID DISK 11-18-2013

EL-597.0 HOLE #M-263 19 JUNE 1963 HOLE #M-264 2 JUNE '63 HOLE #M-265 24 JUNE '63 HOLE #M-266 25 JUNE 63

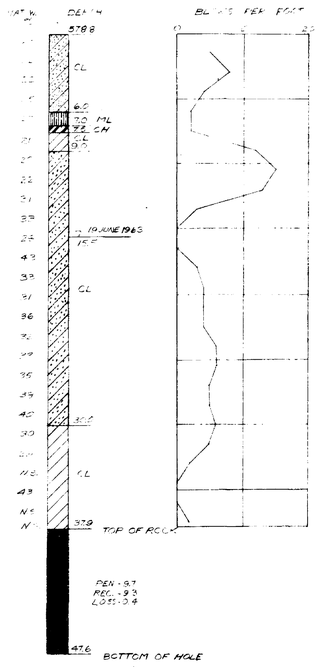

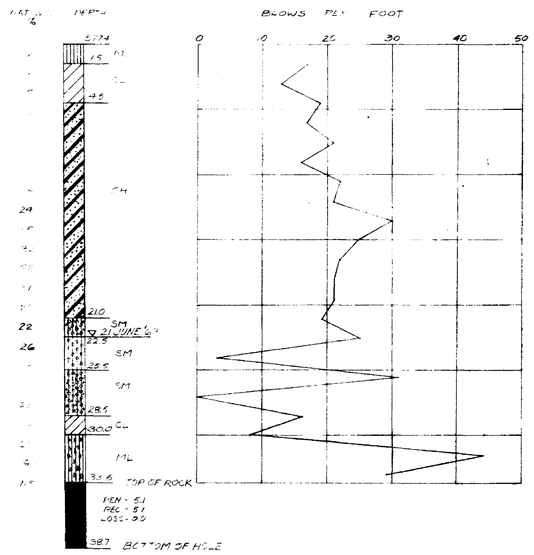

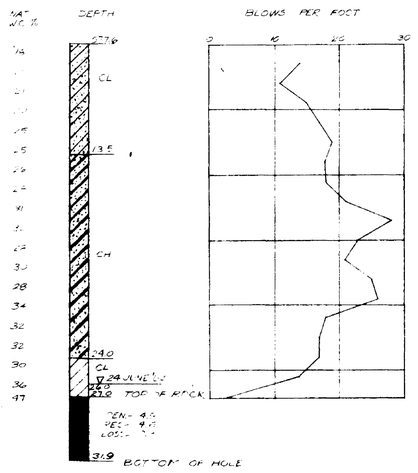

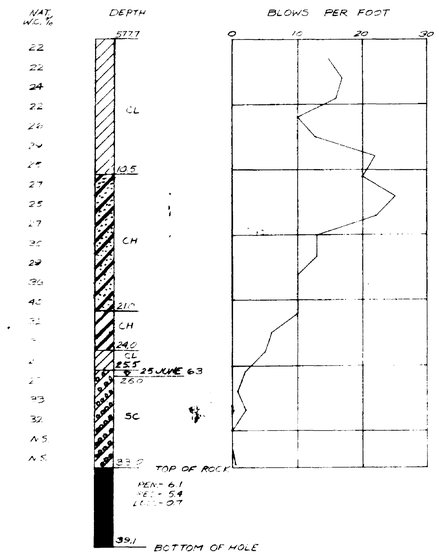

EL-597.0 HOLE #M-263 26 JUNE 63 HOLE #M-264 26 JUNE 63 HOLE #M-265 27 JUNE 63 HOLE #M-266 28 JUNE 63

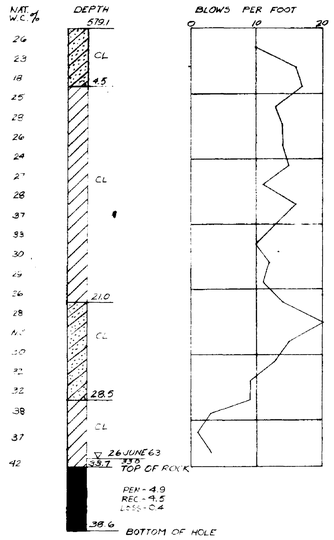

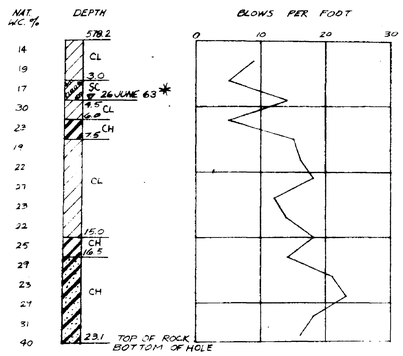

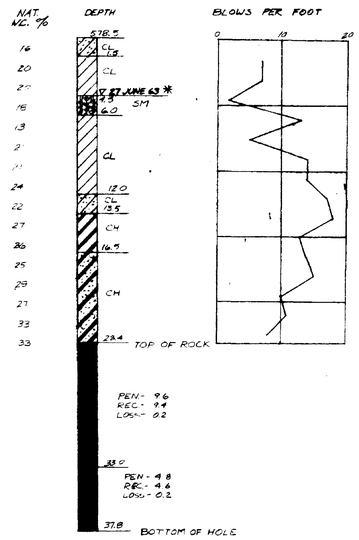

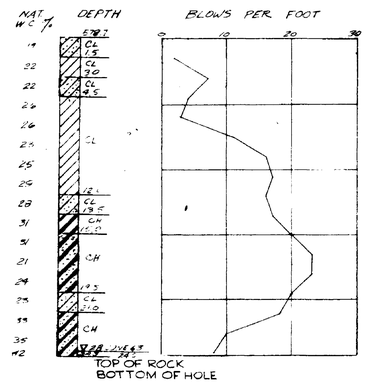

✳ SEEPAGE WATER

GENERAL NOTES:
1. BLOWS PER FOOT ARE FROM STANDARD PENETRATION TEST WHICH IS PERFORMED BY DROPPING A WEIGHT OF 140 POUNDS FROM A HEIGHT OF 30 INCHES ON A CAP ATTACHED TO THE UPPER END OF THE DRILL ROD. A 2" O.D. SPLIT SPOON IS USED ON THE LOWER END.
2. SOILS ARE CLASSIFIED ACCORDING TO THE UNIFIED SOIL CLASSIFICATION SYSTEM, MILITARY STANDARD 619 (C.E.), DATED 30 JUNE 1960.
3. SEE TOPOGRAPHIC SURVEY SHEET FOR LOCATION OF CORE DRILL HOLES.

LEGEND:
- INORGANIC CLAYS OF LOW TO MEDIUM PLASTICITY: SANDY CLAYS, SILTY CLAYS, LEAN CLAYS.
- INORGANIC CLAYS OF LOW TO MEDIUM PLASTICITY: SANDY CLAYS, SILTY CLAYS, LEAN CLAYS, GRAVELLY CLAYS WITH ROCK FRAGMENTS.
- INORGANIC CLAYS OF HIGH PLASTICITY: FAT CLAYS
- INORGANIC CLAYS OF HIGH PLASTICITY: FAT CLAYS WITH ROCK FRAGMENTS.
- CLAYEY SANDS SAND-SILT MIXTURES.
- SILTY SANDS, SAND-SILT MIXTURES WITH ROCK FRAGMENTS.
- INORGANIC SILTS AND VERY FINE SANDS, SILTY OR CLAYEY FINE SANDS OR CLAYEY SILTS.
- INORGANIC SILTS AND VERY FINE SANDS, SILTY OR CLAYEY FINE SANDS OR CLAYEY SILTS WITH ROCK FRAGMENTS.
- ▽ WATER TABLE AND DATE OBSERVED.

APPROVED FOR SAFETY [illegible] DATE — C-3

C.I. NO. | APPROVED

NATIONAL AERONAUTICS AND SPACE ADMINISTRATION — MSFC HUNTSVILLE, ALABAMA

EXTENSION OF LOAD TEST ANNEX (BLDG 4619)

LOG OF BORINGS

NASA AE CONT. NO. | FILE NO. MSFC 88970

DESIGNED:	APPROVAL RECOMMENDED: R.H. Garrett	APPROVED: Paul D. Glass, CHIEF, ENGINEERING BRANCH
DRAWN: DATE:	CHIEF: DATE: 6/17/64	NASA: DATE: 6-16-64
TRACED: A.S.N. JULY 63	APPROVAL RECOMMENDED: [illegible]	DRWG. NO.
CHECKED: A.S.N. A.B.	CHIEF: [illegible]	FED-C-4619-C3
SCALE: 1"=5' VERTICAL	DESIGN DATE: June 5, 1964	
	SPEC. NO.	

MSFC-FORM 232 (REV. DEC., 1960)

MSFC MASTER BID DISK 11-18-2013

ELEV. 567.0 HOLE "M-321 18 FEB'64

HOLE "M-324 21 FEB'64

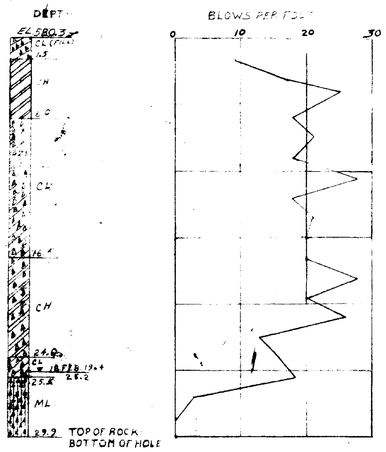

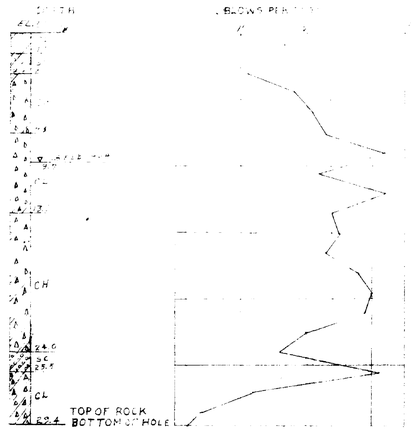

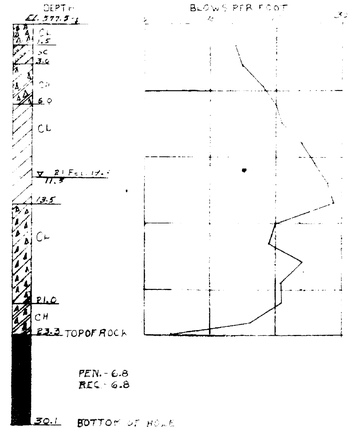

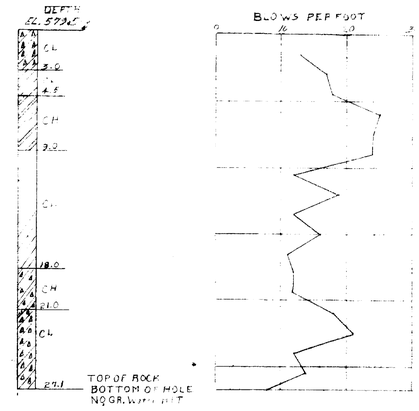

ELEV. 586.0 HOLE "M-325 25 FEB'64 HOLE "M-326 25 FEB'64 HOLE "M-327 25 FEB'64 HOLE "M-328 26 FEB'64 HOLE "M-329 26 FEB'64

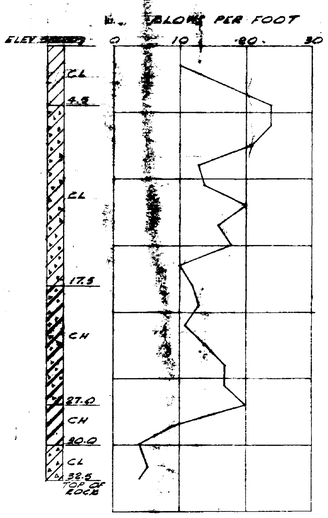

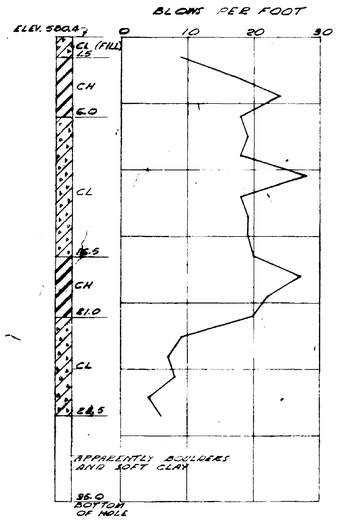

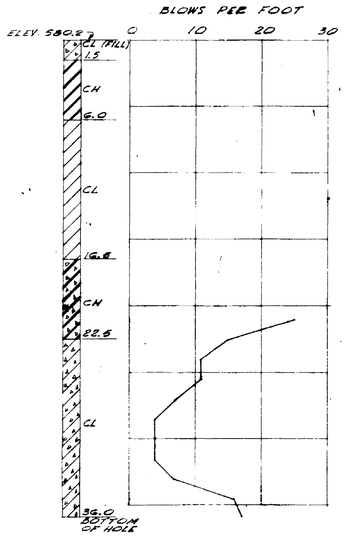

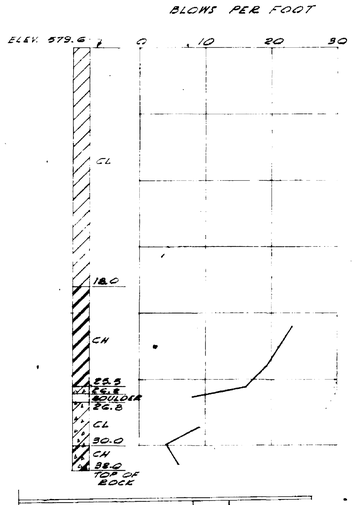

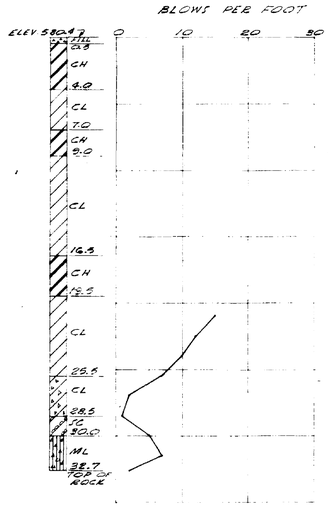

NOTE:
FOR GENERAL NOTES AND LEGEND SEE SHEET 1 OF 2.

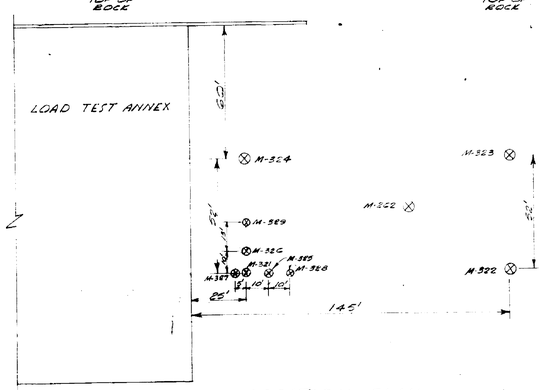

LOCATION PLAN
SCALE: 1" = 30'

APPROVED FOR SAFETY
GEN. SAFETY OFFICE
DATE

C-4

REV.	BY	DATE	C.I. NO.	APPROVED

NATIONAL AERONAUTICS AND SPACE ADMINISTRATION
M S F C
HUNTSVILLE, ALABAMA

EXTENSION OF LOAD TEST ANNEX (BLDG. 4619)

LOG OF BORINGS

NASA AE CONT. NO.		FILE NO 8971 MSFC
SUBMITTED: CHIEF AE: DATE:	APPROVAL RECOMMENDED: R.J. Barrett LAB: DATE: 6/15/64	APPROVED: CHIEF, ENGINEERING BRANCH NASA: DATE: 6-16-64
DESIGNED DRAWN BAX FEB.64 CHECKED A.S. SCALE: 1"=5' VERTICAL	APPROVAL RECOMMENDED: CHIEF, CIVIL ENGR. SECTION DESIGN DATE: June 5, 1964 SPEC. NO.	DRWG. NO: FED-C-4619-C4

MSFC-FORM 232 (JULY, 1960)

MSFC MASTER BID DISK 11-18-2013

4619

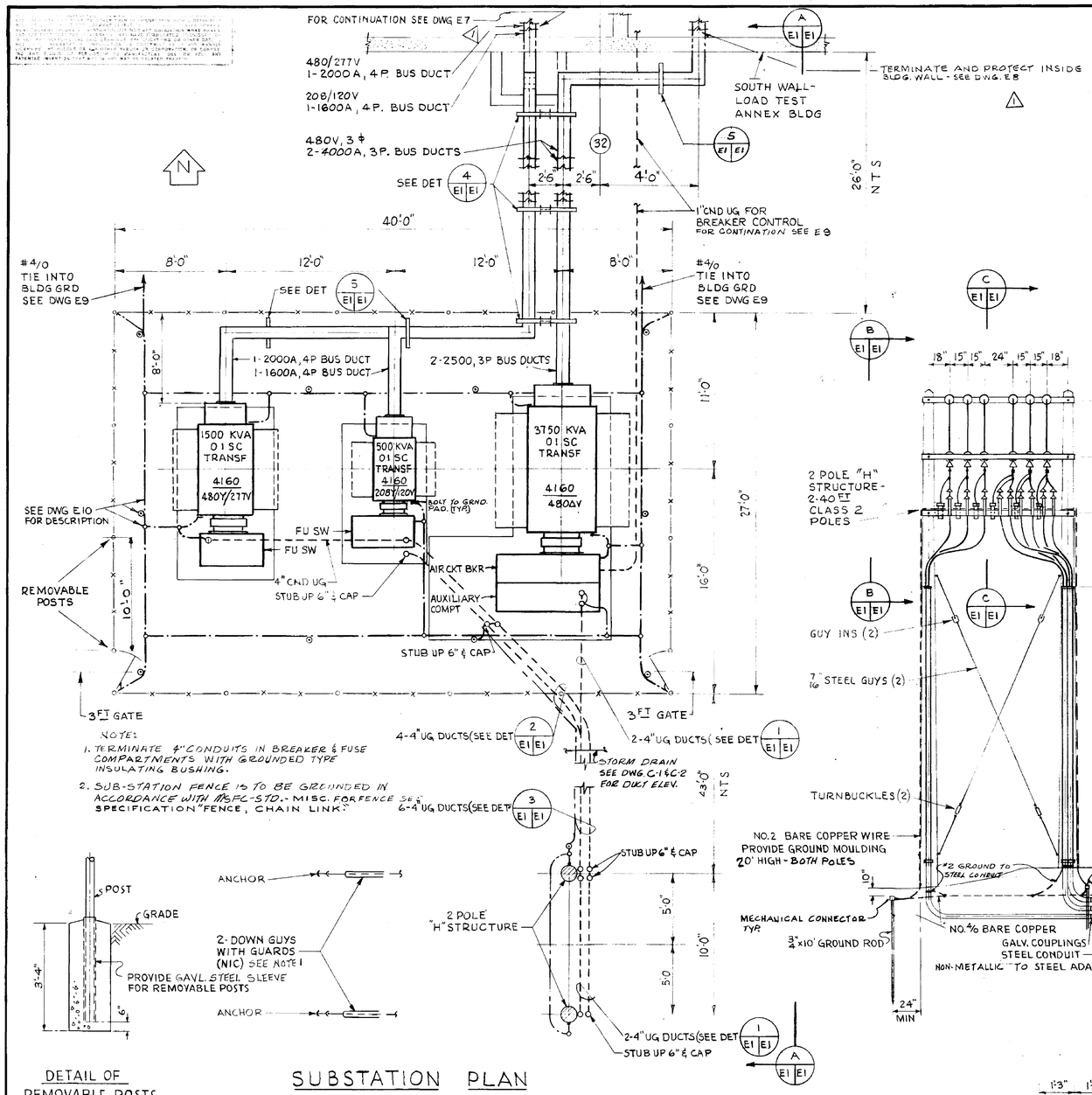

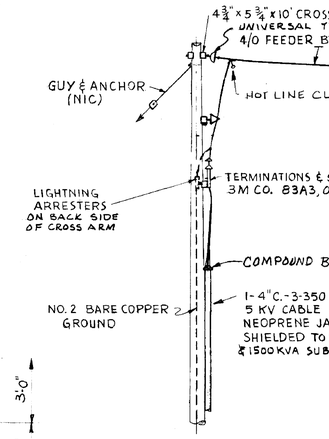

SECTION B E1 E1
SCALE: 1/4" = 1'-0"

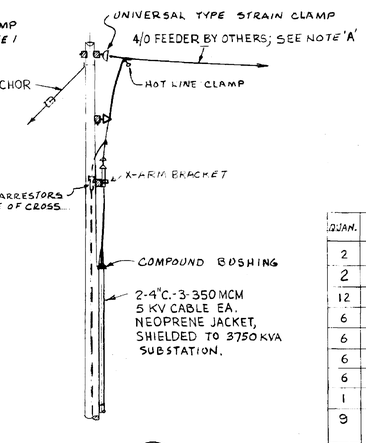

SECTION C E1 E1
SCALE: 1/4" = 1'-0"

QUAN.	H-STRUCTURE LIST OF MATERIAL
2	POLES - 40 FOOT CLASS 2
2	CROSSARM - 3 3/4" x 4 3/4" x 10' LONG
12	INSULATOR - 5KV SUSPENSION TYPE CLASS 52-2
6	INSULATOR - 5KV PIN TYPE CLASS 55-3
6	STRAIN CLAMP UNIVERSAL TYPE
6	LIGHTNING ARRESTER 3KV
6	HOT-LINE CLAMP
1	GROUND ROD - 3/4" x 10' COPPER OR COPPER-CLAD-STEEL
9	TERMINATION - CONSISTING OF TERMINAL SHIELD, STRESS CONE FOR 350 MCM CABLE WITH X-ARM BKTS.
2	STRAIN INSULATOR - GUY
2	CROSSARM - 4 3/4" x 5 3/4" x 10' LONG
2	GUY INSULATOR
2	TURNBUCKLES
AS REQ'D	7/16" HIGH STRENGTH - GALVANIZED STEEL WIRE
3	COMPOUND BUSHING OZ TYPE 'FR' OR EQUAL
AS REQ'D	MISCELLANEOUS HARDWARE, BOLTS, ETC

DETAIL OF REMOVABLE POSTS
NO SCALE

SUBSTATION PLAN
SCALE: 1/4" = 1'-0"

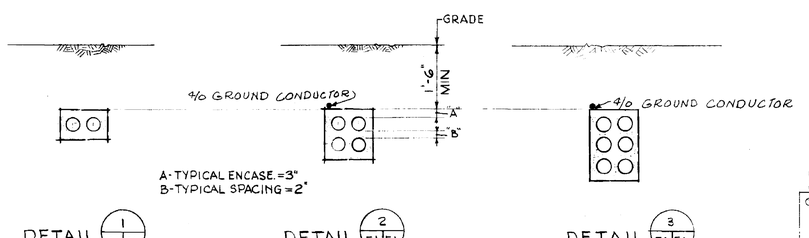

DETAIL 1 E1 E1
SCALE: 1/2" = 1'-0"

DETAIL 2 E1 E1
SCALE: 1/2" = 1'-0"

DETAIL 3 E1 E1
SCALE: 1/2" = 1'-0"

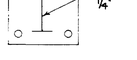

SECTION "B-B"
N.T.S.

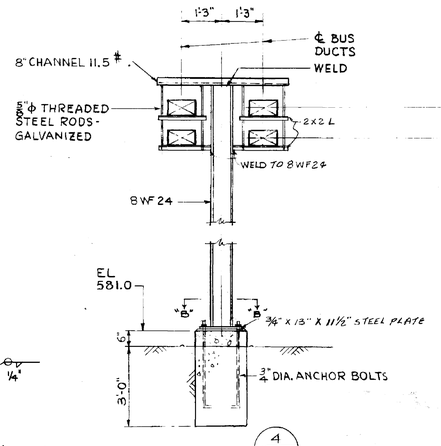

DETAIL 4 E1 E1
SCALE 1/2" = 1'-0"

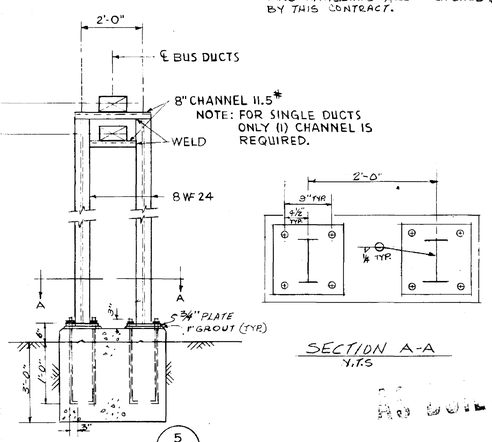

DETAIL 5 E1 E1
SCALE 1/2" = 1'-0"

SECTION A-A
N.T.S.

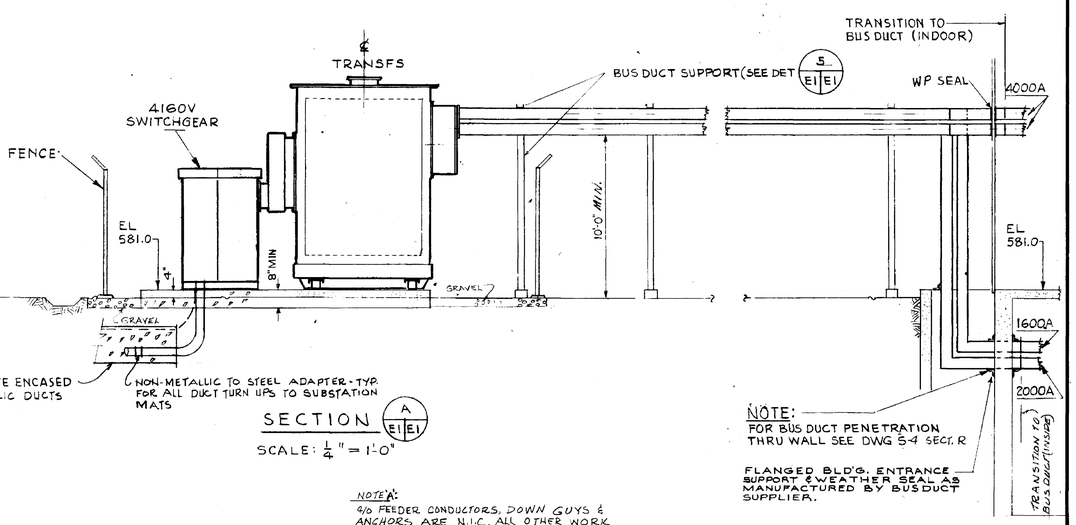

SECTION A E1 E1
SCALE: 1/4" = 1'-0"

NOTE A:
4/0 FEEDER CONDUCTORS, DOWN GUYS & ANCHORS ARE N.I.C. ALL OTHER WORK AND MATERIALS ARE FURNISHED & INSTALLED BY THIS CONTRACT.

REFERENCE:

FENCE & GATE DETAILS	MSFC-STD-MISC.
SINGLE LINE DIAGRAM	E-3
POWER - BASEMENT FLOOR PLAN	E-7
POWER - FIRST FLOOR PLAN	E-8
GROUNDING - BASEMENT FLOOR PLAN	E-9
GROUNDING - LEGEND	E-10

1	3-20-65	RELOCATED 480V. SWITCHGEAR	12072-11	F
REV. NO.	DATE		ECP NO.	APPROVED

NATIONAL AERONAUTICS AND SPACE ADMINISTRATION — M S F C — HUNTSVILLE, ALABAMA

SANDERS & THOMAS INC. POTTS OWN PA. WASH., D.C. MONT., ALA.

EXTENSION OF LOAD TEST ANNEX (BUILDING NO. 4619)

SUB STATION PLAN

NASA CONTR. NO. NAS8-12014 — FILE NO. MSFC 9022

DESIGNED: W.A. Sanders P.E. — APPROVAL RECOMMENDED: R.S. Harnett — APPROVED: Robert O. Ramsay
DRAWN: S.W. — CHIEF, ELECTRICAL SECTION: Ed Wamsley — CHIEF DESIGN BRANCH
CHECKED: J.S.F. — AE: DATE 12 MAY 1964 — LAB: DATE 6/15/64 — NASA: DATE 6-16-64
SCALE: 1/4" = 1'-0" — DESIGN DATE: 6-14-64 — SPEC. NO. F 8 D-42

DRWG. NO. F8D-C-4619-E1

REL. NO. E1

APPROVED FOR SAFETY — SAFETY OFFICE — DATE

4619

MSFC MASTER BID DISK 11-18-2013

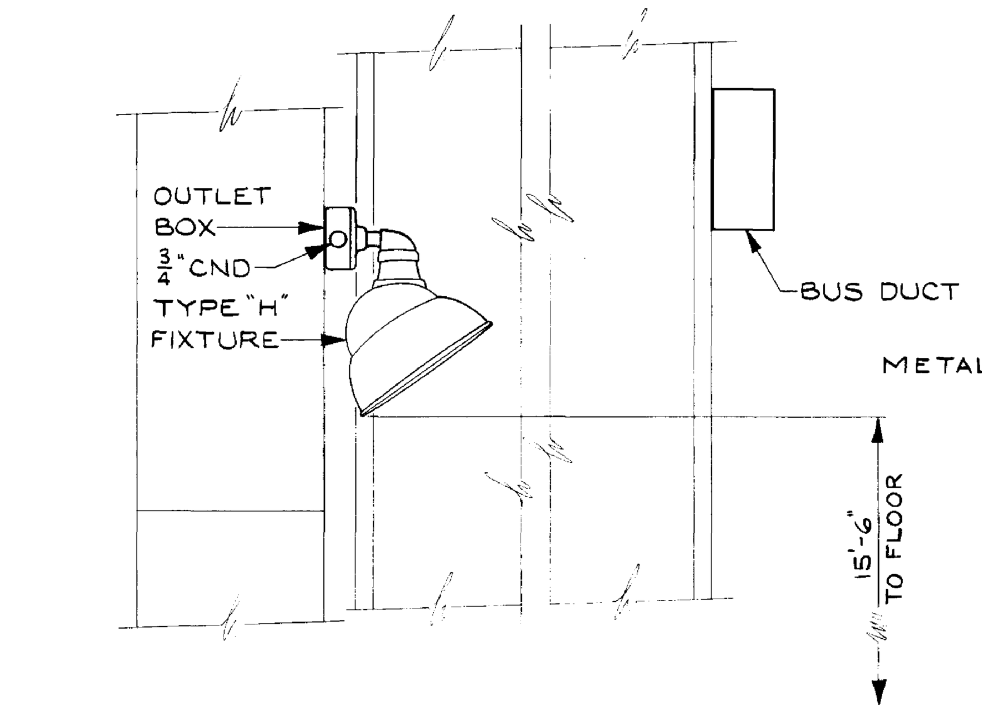

DETAIL 1
NO SCALE E5 E2

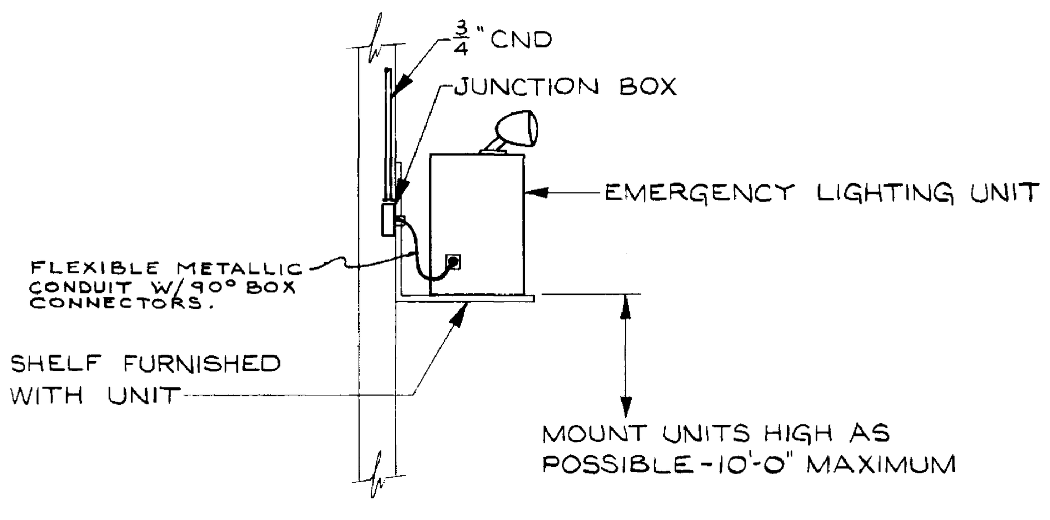

DETAIL 4
NO SCALE E5 E2

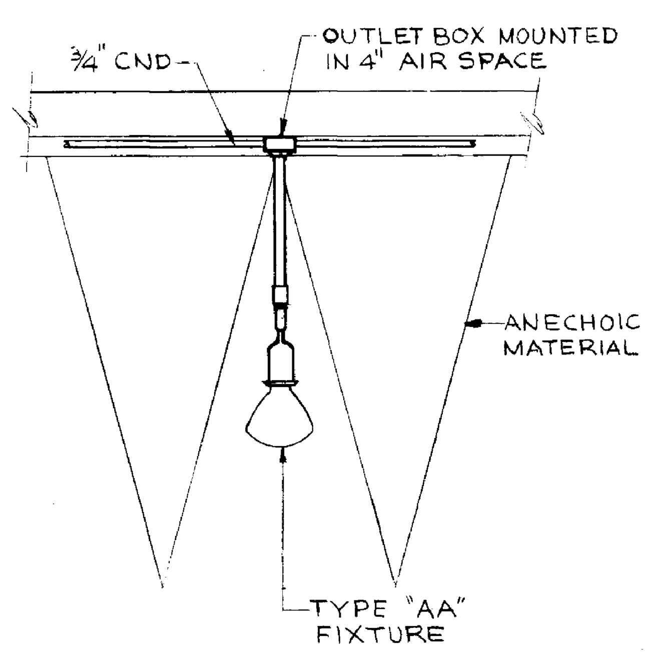

DETAIL 5
NO SCALE E5 E2

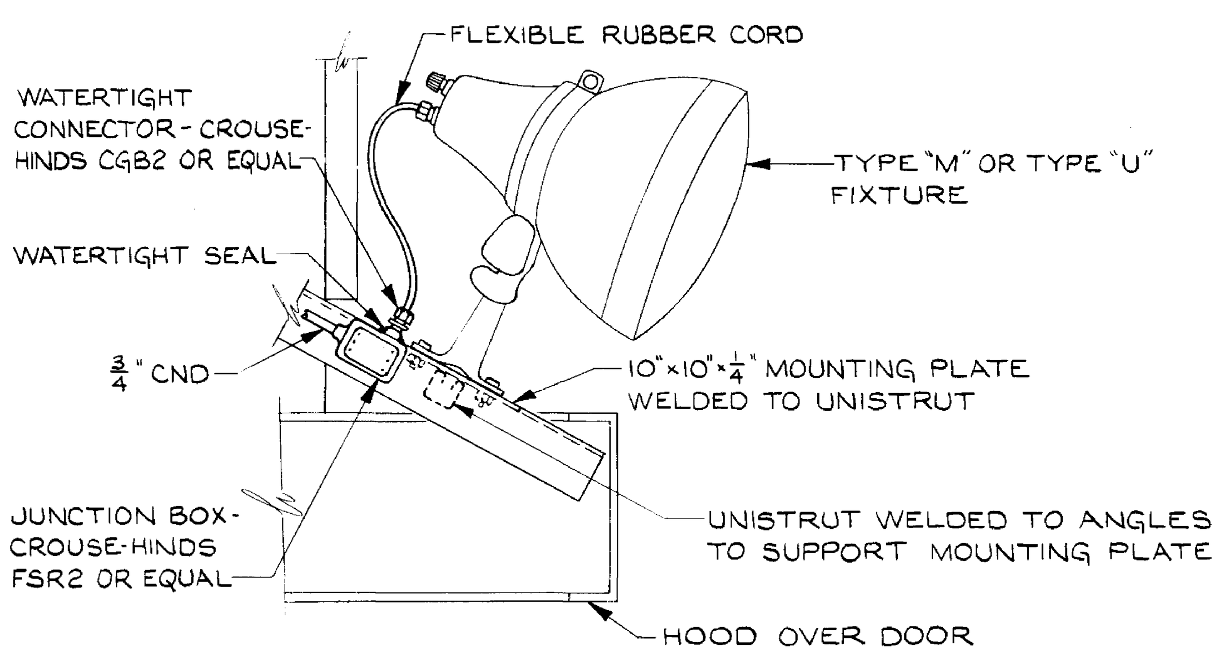

DETAIL 2
NO SCALE E5 E2

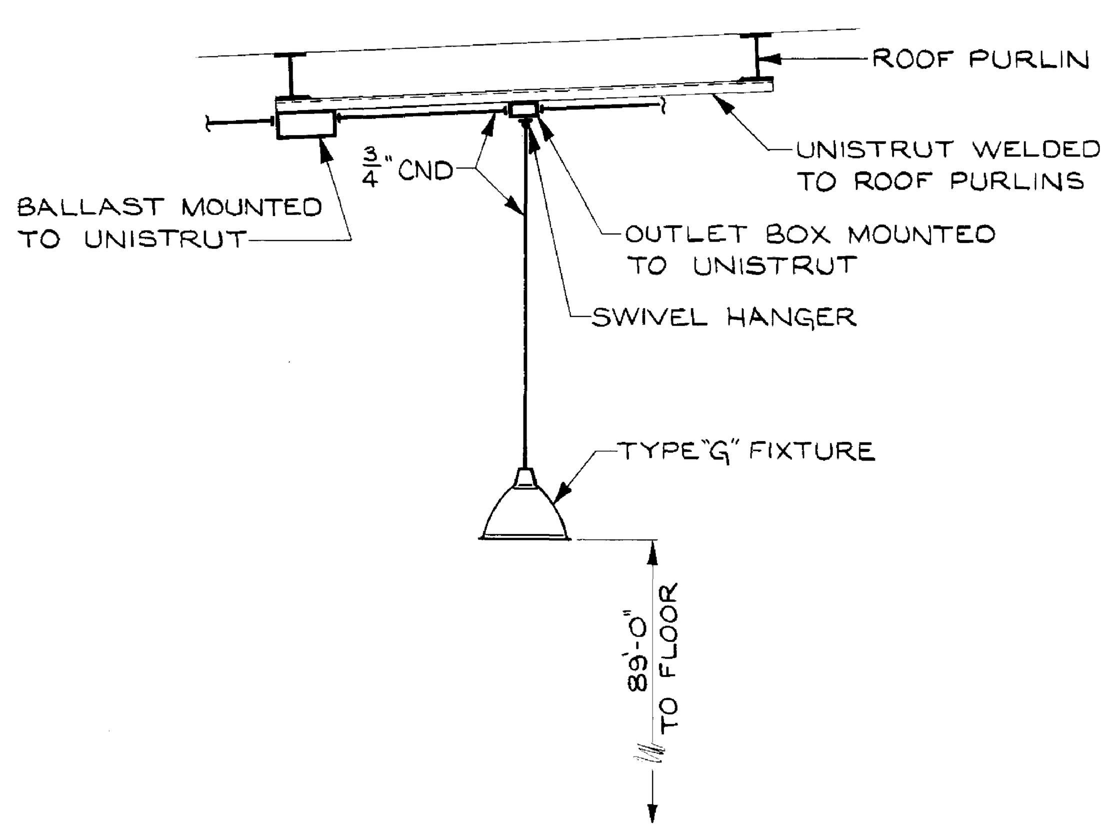

DETAIL 3
NO SCALE E5 E2

LIGHTING FIXTURE SCHEDULE

FIXTURE TYPE	ROOM DESIGNATION	WATTS/ FIXTURE	MOUNTING & HEIGHT
Z	138	1L/300	RECESSED
AA	111	1L/300	PENDANT - 15'-0"

LIGHTING FIXTURE SCHEDULE

FIXTURE TYPE	ROOM DESIGNATION	WATTS/ FIXTURE	MOUNTING & HEIGHT
A	109, 112, 114 THRU 118, 122, 124 THRU 130, 132 THRU 135, 200 THRU 206, 208, 212 THRU 220	4L/40	RECESSED
B	101, 102, 105	2L/110	SURFACE
C	103, 110 & 113	2L/110	PENDANT - 20'-0"
D	104, 106 & 107	2L/40	SURFACE
E	131 & 221	2L/40	RECESSED
F	02, 04 & 05	2L/40	SURFACE
G	100	1L/1000	PENDANT - 89'-0"
H	100	1L/150	WALL MOUNTED
J	123 & 211	1L/100	SURFACE
K	51, 52 & 53	2L/100	SURFACE
L	OUTSIDE LIGHTING	1L/200	WALL MOUNTED
M	OUTSIDE FLOODLIGHTS	1L/750	WALL MOUNTED
N	119, 120, 121, 207, 209 & 210	1L/40	SURFACE
O	EXIT LIGHT	2L/25	SURFACE
P	EXIT LIGHT	2L/25	SURFACE
Q	EXIT LIGHT	2L/25	WALL MOUNTED
R	EXIT LIGHT	2L/25	WALL MOUNTED
S	EXIT LIGHT	2L/25	END MOUNTED
T	EXIT LIGHT	2L/25	END MOUNTED
U	OUTSIDE FLOODLIGHT	1L/300	WALL MOUNTED
V	03	2L/40	PENDANT
W	01 & 03	1L/150	WALL MOUNTED
X	51 & 52	1L/200	WALL MOUNTED
Y	01	1L/200	PENDANT - 9'-0"

LIGHTING FIXTURE DESCRIPTION

TYPE X	1L/200W WALL MT'D INCANDESCENT WITH TAPERED OPAL GLASS GLOBE. McPHILBEN CATALOG NO. 43-50 OR EQUAL.
TYPE Y	1L/200W PENDANT MT'D RLM INCANDESCENT STANDARD DOME UNIT. MILLER CAT. NO. AE-5042 W/ 3/4" CONDUIT MTG. OR EQUAL
TYPE Z	1L/300W RECESSED INCANDESCENT WITH 3/8" SHOCK RESISTANT LENS. McPHILBEN CATALOG NO. 4-1213HS OR EQUAL
TYPE AA	1L/300W (HEAT RESISTANT R-40) PENDANT MOUNTED FLOODLIGHT WITH CAST ALUMINUM LAMPHOLDER. REVERE CATALOG NO. 3288 OR EQUAL

LIGHTING FIXTURE DESCRIPTION

TYPE A	4L/40W RECESSED 2'x4' FLUORESCENT TROFFER WITH PRISMATIC PLASTIC LENS. WEST. CATALOG NO. M440-624 WOK OR EQUAL
TYPE B	2L/110W SURFACE MOUNTED FLUORESCENT POWER GROOVE LAMPS WITH LOUVERS. MILLER CATALOG NO. 1D-2501-04, LOUVER NO 19960 OR EQUAL
TYPE C	SAME AS TYPE "B" EXCEPT PENDANT MOUNTED.
TYPE D	2L/40W RS SURFACE MOUNTED FLUORESCENT WITH LOUVERS AND PLASTIC SIDES. WEST. CATALOG NO. 5C 80 RP OR EQUAL.
TYPE E	2L/40W RECESSED FLUORESCENT TROFFER WITH PRISMATIC PLASTIC LENS. WEST. LIGHTING CATALOG NO. M240-624 WOK OR EQUAL.
TYPE F	2L/40W SURFACE MOUNTED INDUSTRIAL FLUORESCENT. MILLER CATALOG NO. 1D-2100-04. OR EQUAL.
TYPE G	1L/1000W PENDANT MOUNTED MERCURY VAPOR LAMP. HOLOPHANE CATALOG NO. 642 OR EQUAL.
TYPE H	1L/150W WALL MT'D INCANDESCENT WITH SYMMETRICAL ANGLE REFLECTOR. BENJAMIN CATALOG NO. L-1823-3/4 OR EQUAL
TYPE J	1L/100W SURFACE MOUNTED RLM INCANDESCENT. MILLER CATALOG NO. AE-5000 OR EQUAL.
TYPE K	2L/100W SURFACE MOUNTED INCANDESCENT WITH MOLDED GLASS LENS. McPHILBEN CATALOG NO. 32-88 OR EQUAL.
TYPE L	1L/200W WALL MOUNTED INCANDESCENT WITH CRYSTAL GLASS GLOBE. HOLOPHANE CATALOG NO. 420 OR EQUAL.
TYPE M	1L/750W INCANDESCENT FLOODLIGHT WITH FLAT MOUNTING BASE. BENJAMIN CATALOG NO. RD-18 OR EQUAL.
TYPE N	1L/40W SURFACE MOUNTED FLUORESCENT WITH WRAP-AROUND POLYSTYRENE DIFFUSER. MILLER CATALOG NO. CK-1100-04 OR EQUAL
TYPE O	2L/25W CEILING MT'D INCANDESCENT EXIT LIGHT WITH 8" GREEN LETTERS ON WHITE BACKGROUND. McPHILBEN CATALOG NO. 40C-8G OR EQUAL.
TYPE P	EXIT LIGHT SAME AS TYPE "O" EXCEPT TWIN FACED. McPHILBEN CATALOG NO. 40C-28G OR EQUAL.
TYPE Q.	2L/25W WALL MT'D INCANDESCENT EXIT LIGHT WITH 8" GREEN LETTERS ON WHITE BACKGROUND. McPHILBEN CATALOG NO. 40W-8G OR EQUAL.
TYPE R	EXIT LIGHT SAME AS TYPE "Q" EXCEPT DIRECTIONAL ARROW POINTING LEFT. McPHILBEN CATALOG NO. 40W-8G "ARROW L" OR EQUAL
TYPE S	2L/25W END MT'D INCANDESCENT WITH 8" GREEN LETTERS ON WHITE BACKGROUND. McPHILBEN CATALOG NO. 40E-8G OR EQUAL.
TYPE T	2L/25W END MT'D INCANDESCENT EXIT LIGHT TWIN FACED WITH 8" GREEN LETTER ON WHITE BACKGROUND AND RIGHT POINTING ARROWS. McPHILBEN CATALOG NO. 40E-28G-"ARROW R" OR EQUAL
TYPE U	1L/300W INCANDESCENT FLOODLIGHT WITH FLAT MOUNTING BASE. BENJAMIN CATALOG NO. RD-14 OR EQUAL.
TYPE V	SAME AS TYPE "F" EXCEPT PENDANT MOUNTED.
TYPE W	1L/150W WALL MT'D INCANDESCENT WITH PROTECTIVE GUARD. MILLER CATALOG NO. AC-2051 OR EQUAL.

APPROVED FOR SAFETY
15 June 64
DATE

LEGEND - LIGHTING AND POWER

- FLUORESCENT FIXTURE MOUNTED AS INDICATED ON FIXTURE SCHEDULE. LOWER CASE LETTER INDICATES CONTROLLING SWITCH.
- CEILING MOUNTED INCANDESCENT LIGHT OUTLET
- WALL MOUNTED INCANDESCENT LIGHT OUTLET
- FLOODLIGHT, MOUNTING HEIGHT AS SHOWN OR DETAILED.
- MERCURY-VAPOR LIGHT
- SELF CHARGING BATTERY TYPE EMERGENCY LIGHTING UNIT.
- EXIT LIGHT WALL OR CEILING MOUNTED, ARROW INDICATES DIRECTION OF ARROW ON FIXTURE.
- (B, 100, 24, 9'-6") LIGHTING FIXTURE IDENTIFICATION SYMBOL. LETTER INDICATES TYPE OF FIXTURE (SEE FIXTURE SYMBOLS AND DESCRIPTION), NUMBER IN LOWER HALF OF HEXAGON INDICATES WATTAGE OF FIXTURE REQUIRED, NUMBER NEAR BOTTOM OF HEXAGON INDICATES FIXTURE MOUNTING HEIGHT NUMBER NEAR TOP OF HEXAGON INDICATES NUMBER OF FIXTURES IN AREA.
- LIGHTING PANEL
- POWER PANEL
- SPECIAL EQUIPMENT PANEL AS NOTED ON DRAWINGS.
- Sa — LOCAL SWITCH SINGLE POLE-20A, 120/277V AC. LOWER CASE LETTER INDICATES FIXTURES CONTROLLED. MOUNT 4'-0" ABOVE FLOOR, UNLESS OTHERWISE NOTED.
- S3 — LOCAL SWITCH, 3 WAY, 20A, 120/277V AC MOUNT 4'-0" ABOVE FLOOR, UNLESS OTHERWISE NOTED.
- Sp — LOCAL SWITCH, 20A, 120/277V AC WITH PILOT LIGHT.
- S — MANUAL STARTING SWITCH FOR SINGLE PHASE FRACTIONAL HORSEPOWER MOTORS, SINGLE POLE, 125V, WITH THERMAL OVERLOAD UNIT RATED AT 110% OF MOTOR NAMEPLATE RATING.
- NON-FUSIBLE DISCONNECT SW. 30A., 3P., 600V. UNLESS INDICATED OTHERWISE.
- 3 — MOTOR, NUMBER IN CIRCLE INDICATES HORSEPOWER
- 20A., D.C. RECEPT. C.H.# ARE 2212 OR EQUAL.
- F — FUSIBLE SAFETY SW. - SIZE AS NOTED.
- MC — MAGNETIC CONTACTOR
- CONDUIT CONCEALED IN CEILING OR WALL. } C.O. INDICATES CONDUIT ONLY
- CONDUIT CONCEALED IN FLOOR OR GROUND.
- CONDUIT EXPOSED
- CROSS LINES (3) INDICATE 2#12, 1#12 GND.
- CROSS LINES INDICATE NUMBER OF WIRES IN CONDUIT, NO. 12 AWG WIRES UNLESS OTHERWISE NOTED. NO CROSS LINES INDICATES 2 NO.12 UNLESS OTHERWISE NOTED. CONDUIT SIZE AS REQUIRED BY NEC UNLESS OTHERWISE NOTED. 3/4" MIN. (10, 14; EQPT. GRD WIRE (GREEN))
- CIRCUIT HOMERUN TO PANEL
- CONDUIT TURNING UP
- CONDUIT TURNING DOWN
- a — SPECIAL RECEPT., "a" INDICATES 4P., 3W, 60A., 600V. - RECEPT. "b" INDICATES 5P., 4W., 60A., 250V. — "a" IS CROUSE HINDS # AREA 6424, "b" IS C.H. # RPC 233427 509A-ARE OR EQUAL
- 120V, 60~ 1ø-3 WIRE DUPLEX RECEPT. HUBBELL #5262 OR EQUAL
- c — CLOCK OUTLET-HUBBELL CAT. NO. 5233 OR EQUAL
- WH — WATER HEATER
- 480V-3ø-3W-400A PLUG-IN BUS DUCT
- 120/208V-3ø-4W-400A PLUG-IN BUS DUCT
- CIRCUIT BREAKER (PLUG-IN TYPE)
- C — CABLE TAP BOX
- DC — DC POWER PANEL
- RP — 120/208V-3ø-60~ REGULATED VOLTAGE POWER PANEL
- MAGNETIC MOTOR STARTER FURNISHED WITH MECH. EQUIP. AND INSTALLED UNDER MECH. WORK.
- B — 2 LAMP/1000W MERCURY VAPOR BALLAST
- DUCT HEATER
- 20A., 250V. RECEPT. HUBBELL # 7410G OR EQUAL
- J — JUNCTION BOXES
- CHAIN LINK FENCE
- COMBINATION MAGNETIC MOTOR STARTER. FURNISHED W/MECH. EQUIP. AND INSTALLED UNDER ELECT. WORK.
- COMBINATION MAG. MOTOR STARTER W/ OPEN-OFF-CLOSE PUSH BUTTON SW. ON COVER. FURNISHED W/MECH. EQUIP. AND INSTALLED UNDER ELECT. WORK.

NOTES:

1. RECEPTACLES SHALL BE MOUNTED 1'-0" ABOVE FLOOR IN OFFICE AREAS AND 4'-0" ABOVE FLOOR IN LABS AND SHOPS.
2. ALL INCANDESCENT FIXTURES SHALL BE OPERATED AT 120 VOLTS.
3. ALL FLUORESCENT FIXTURES SHALL BE OPERATED AT 277 VOLTS.
4. ALL MERCURY VAPOR FIXTURES SHALL BE OPERATED AT 480 VOLTS.
5. ALL BALLASTS ARE TO BE ETL-CBM CERTIFIED AND INDIVIDUALLY FUSED.

REV	BY	DATE		C.I. NO.	APPROVED

NATIONAL AERONAUTICS AND SPACE ADMINISTRATION — M S F C, HUNTSVILLE, ALABAMA

SANDERS & THOMAS INC. POTTSTOWN PA. - WASH., D.C. - MONT., ALA.

EXTENSION OF LOAD TEST AN IEX (BUILDING NO. 4619)

LEGEND & SCHEDULES

NASA AE CONT. NO. NAS 8-12014 — FILE NO. MSFC 9023

SUBMITTED: W.A. Sanders P.E. SEC'Y TREAS. DATE 12 MAY 64
APPROVAL RECOMMENDED: R.S. Garrett LAB. DATE 6/15/64
APPROVED: Robert D. [signature] CHIEF DESIGN BRANCH NASA DATE: 6-16-64
REF NO E2
DESIGNED J.F. DRAWN WNU CHECKED JSF SCALE NONE
APPROVAL RECOMMENDED: Ed. Demijia CHIEF ELECTRICAL SECTION DESIGN DATE: 6-16-64 SPEC. NO. F & D - 433
DRWG. NO. F8D-C-4619-E2

4619

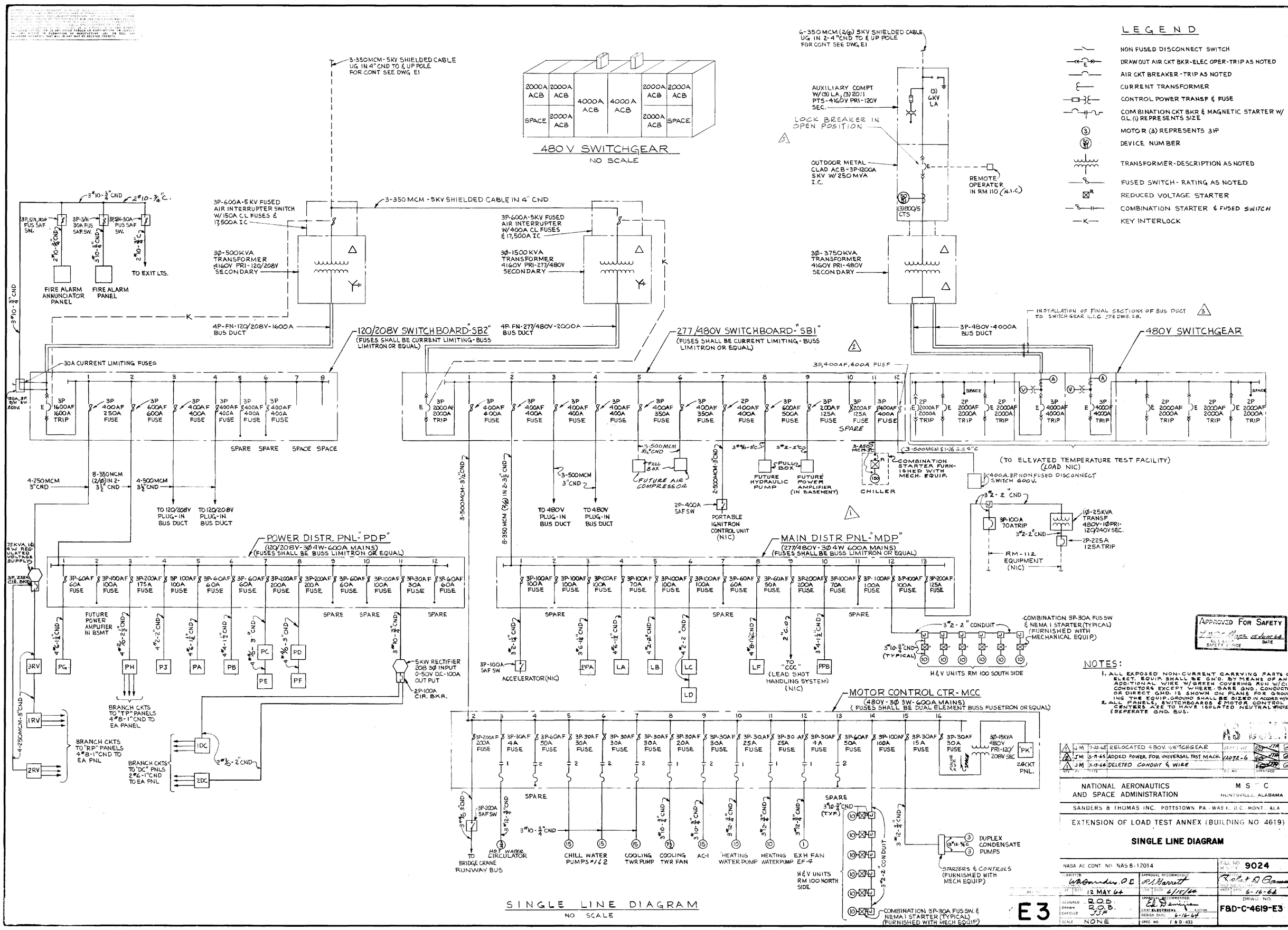

MSFC MASTER BID DISK 11-18-2013

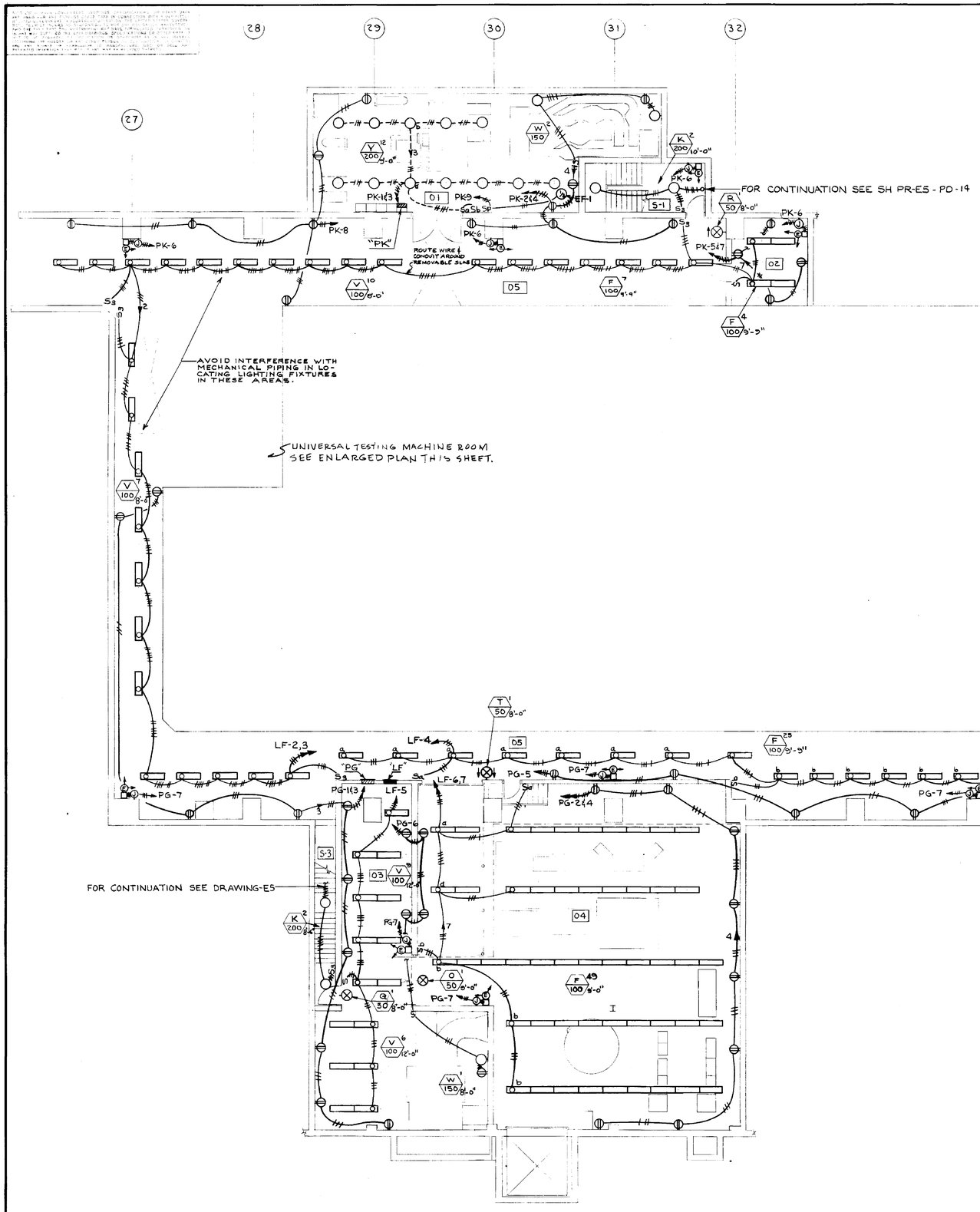

BASEMENT FLOOR PLAN
SCALE: 1/8" = 1'-0"

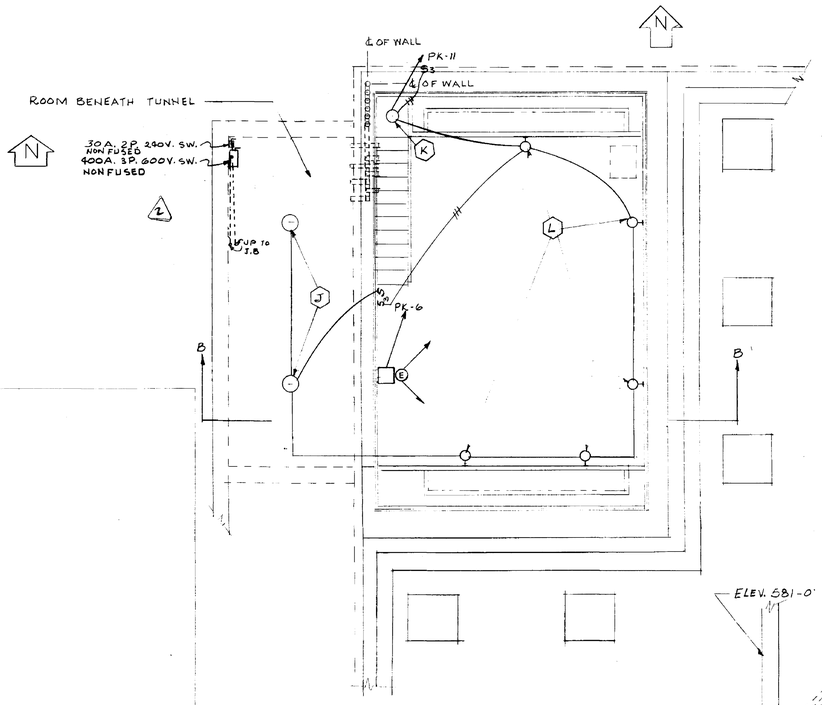

UNIVERSAL TESTING MACHINE ROOM PLAN
SCALE 1/4" = 1'-0"
NOTE: TERMINATE ALL 3"C WITH FLUSH COUPLING AND PLUG.

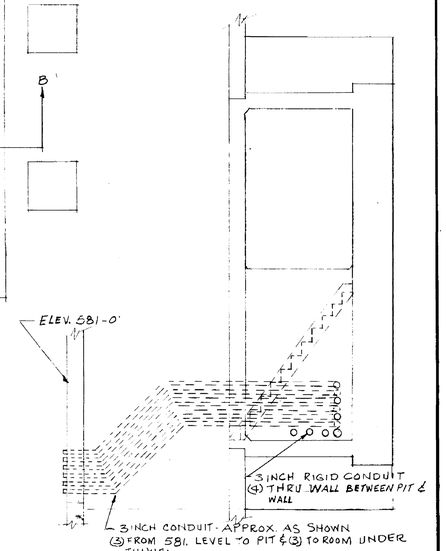

SECTION C-C
SCALE 1/4" = 1'-0"

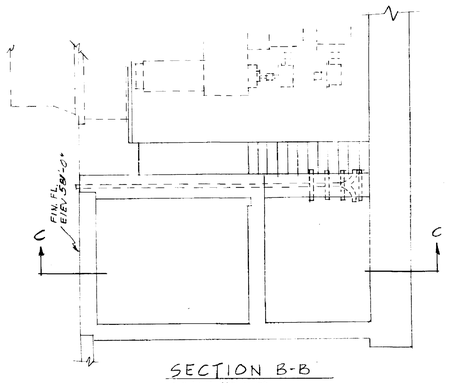

SECTION B-B
SCALE 1/4" = 1'-0"

NOTES:
1. FOR LEGEND & FIXTURE SCHEDULE SEE DRAWING - E2.
2. FOR CIRCUIT SCHEDULES SEE DRAWING - E14 & E15
3. FOR EXACT LOCATION OF LIGHTS SEE REFLECTED CEILING PLAN DRAWING - A15.
4. PROVIDE 2-SPARE 1" CONDUITS FROM PANELS "PG" & "LF" UP TO FLUSH MOUNTED JUNCTION BOX 9'-0" A.F.F.

AS BUILT

2	JM	3-19-65	ADDED TWO SAFETY SWITCHES	12072-6	B
1	JM	7-13-64	GENERAL REVISION		B
NO.	BY	DATE		C.T. NO.	APPROVED

NATIONAL AERONAUTICS AND SPACE ADMINISTRATION — M S F C HUNTSVILLE, ALABAMA

SANDERS & THOMAS INC. POTTSTOWN PA. - WASH., D.C. - MONT., ALA.

EXTENSION OF LOAD TEST ANNEX (BUILDING NO. 4619)
LIGHTING

BASEMENT FLOOR PLAN

NASA AE CONT. NO. NAS8-12014			FILE NO. M S F C 9025
SUBMITTED:	APPROVAL RECOMMENDED: R.S. Hart		APPROVED: [illegible] CHIEF DESIGN BRANCH
DATE: 12 MAY 64	L&B DATE: 6/15/64		NASA DATE: 6-16-64
DESIGNED WNU DRAWN WNU CHECKED JSF	APPROVAL RECOMMENDED: E.D. Dimmick CHIEF ELECTRICAL SECTION DESIGN DATE: 6-16-64		DRWG. NO. F&D-C-4619-E4
SCALE: 1/8" = 1'-0"	SPEC. NO. — F & D - 433		

APPROVED FOR SAFETY — [illegible] 15 June 64 DATE — SAFETY OFFICE

RLF NO. E4

4619

MSFC MASTER BID DISK 11-18-2013

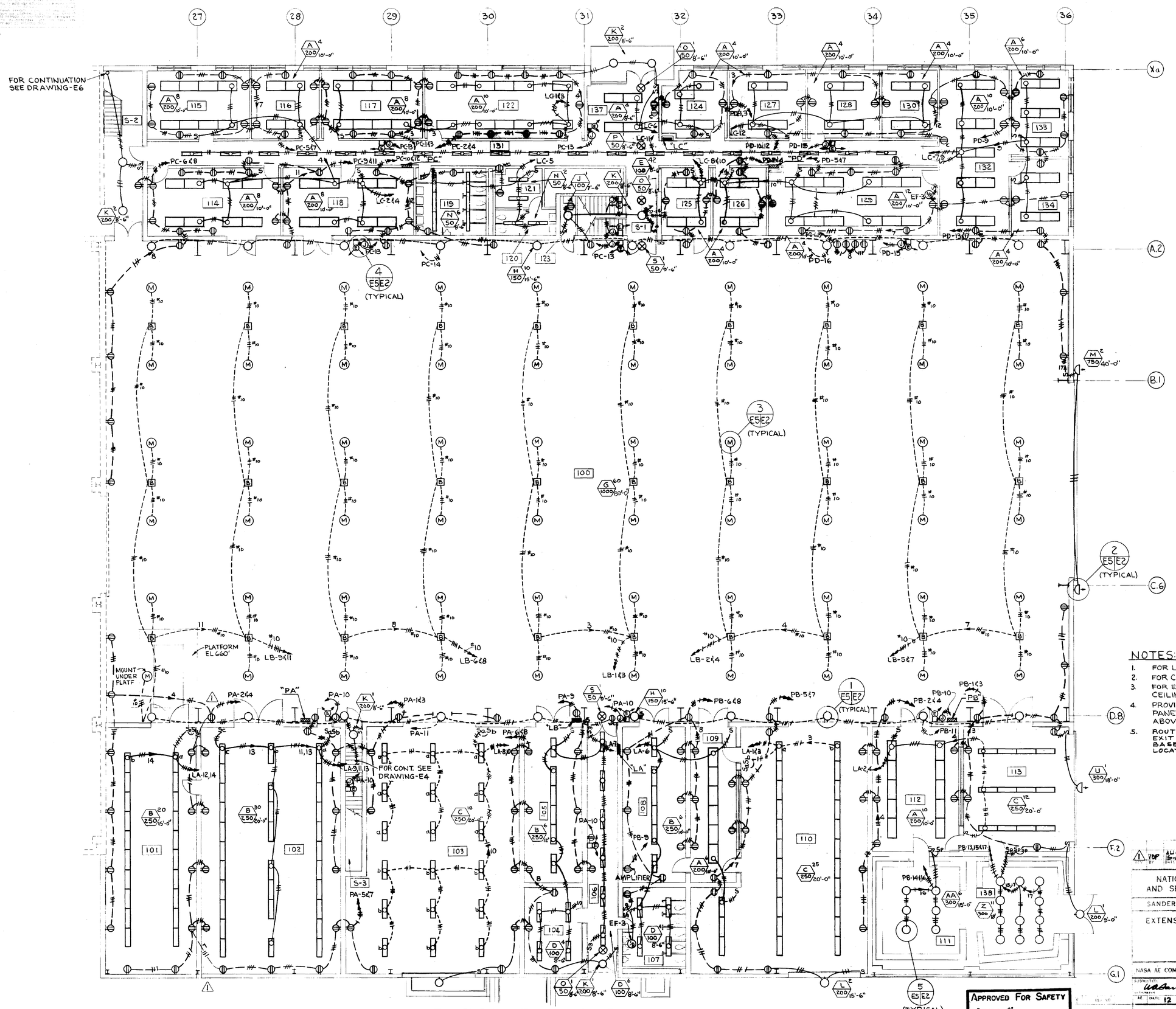

FIRST FLOOR PLAN
SCALE: 1/8" = 1'-0"

NOTES:

1. FOR LEGEND & FIXTURE SCHEDULE SEE DRAWING-E2.
2. FOR CIRCUIT SCHEDULES SEE DRAWING-E14 & E15.
3. FOR EXACT LOCATION OF LIGHTS SEE REFLECTED CEILING PLAN DRAWING-A15.
4. PROVIDE 2-SPARE 1" CONDUITS FROM FLUSH MOUNTED PANELBOARDS "PC", "PD" & "LC" TO POINT ACCESSIBLE ABOVE CEILING.
5. ROUTE EXIT LIGHT WIRE & CONDUIT BACK TO EXIT LIGHT DISCONNECT IN BASEMENT. SEE BASEMENT POWER PLAN SHEET E-7 FOR SWITCH LOCATION & SHEET E-3 FOR SINGLE LINE DIAGRAM.

AS BUILT

1	VDP	15-67	AS BUILT
NO.	BY	DATE	

NATIONAL AERONAUTICS AND SPACE ADMINISTRATION — M S F C — HUNTSVILLE, ALABAMA

SANDERS & THOMAS INC. POTTSTOWN PA. WASH. D.C. MONT. ALA.

EXTENSION OF LOAD TEST ANNEX (BUILDING NO. 4619)
LIGHTING
FIRST FLOOR PLAN

NASA AE CONT. NO. NAS8-12014 — FILE NO. M S F C 9026

SUBMITTED: W.H. Sanders, P.E.	APPROVAL RECOMMENDED: R.L. Barnett	APPROVED: Robert O. Emmons	
AE DATE: 12 MAY 64	LAB DATE: 6/17/64	CHIEF ENGINEER DATE: 6-16-64	
DESIGNED WNU	APPROVAL RECOMMENDED: C.A. Blevins	DRWG. NO. F8D-C-4619-E5	
DRAWN WNU	CHIEF ELECTRICAL SECTION		
CHECKED JSF	DESIGN DATE: 6-64		
SCALE: 1/8" = 1'-0"	SPEC NO. F 8 D - 4388		

APPROVED FOR SAFETY
GESL ELECTRICAL SAFETY OFFICE
15 June 64 DATE

E5

4619

MSFC MASTER BID DISK 11-18-2013

THIS DRAWING IS THE PROPERTY OF NASA AND IS LOANED SUBJECT TO RETURN UPON DEMAND AND IN GOOD CONDITION. IT IS UNPUBLISHED PROPERTY OF NASA AND IS NOT TO BE REPRODUCED, COPIED OR USED IN ANY MANNER WHATSOEVER WITHOUT THE EXPRESS WRITTEN PERMISSION OF NASA. ANY INFRINGEMENT OF NASA'S COMMON LAW COPYRIGHT OR OTHER PROPRIETARY RIGHTS MAY RESULT IN CIVIL PROCEEDINGS.

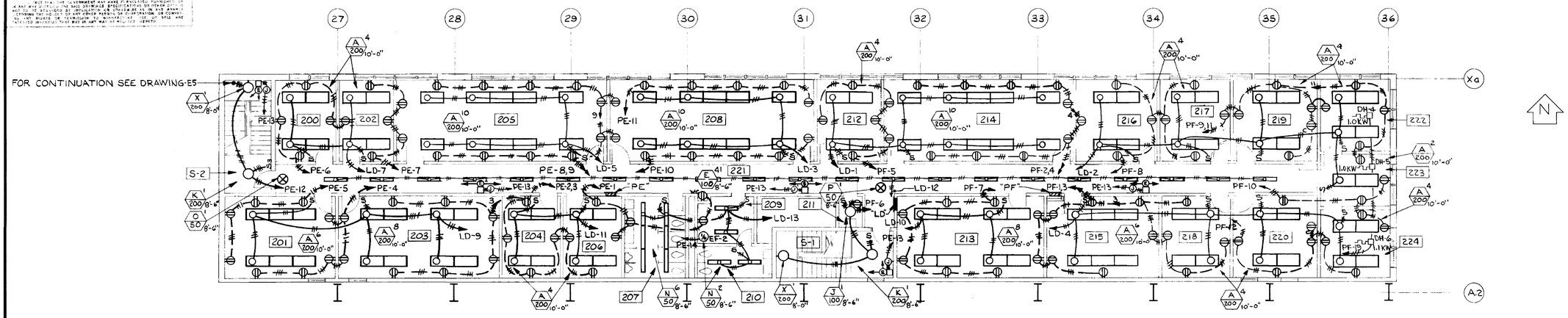

SECOND FLOOR PLAN

SCALE: 1/8" = 1'-0"

NOTES:

1. FOR LEGEND & FIXTURE SCHEDULE DRAWING-E2.
2. FOR CIRCUIT SCHEDULES SEE DRAWING-E14 & E15
3. FOR EXACT LOCATION OF LIGHTS SEE REFLECTED CEILING PLAN DRAWING-A15.
4. PROVIDE 2-SPARE 1" CONDUITS FROM FLUSH MOUNTED PANELBOARDS "PE","PF" & "LD" TO POINT ACCESSIBLE ABOVE CEILING.

AS BUILT

NO.	BY	DATE	C.I. NO.	APPROVED

NATIONAL AERONAUTICS AND SPACE ADMINISTRATION — M S F C, HUNTSVILLE, ALABAMA

SANDERS & THOMAS INC. POTTSTOWN, PA. - WASH., D.C. - MONT., ALA.

EXTENSION OF LOAD TEST ANNEX (BUILDING NO. 4619)

LIGHTING

SECOND FLOOR PLAN

NASA AE CONT. NO. NAS8-12014 — FILE NO. M S F C 9027

SUBMITTED: W.A. Sanders P.E. — APPROVAL RECOMMENDED: R.A. Garrett — APPROVED: Robert O. Gumm

SPECIFIED: AE DATE 12 MAY 64 — LAB DATE 6/15/64 — NASA DATE 6-16-64

DESIGNED WNU — DRAWN WLT — CHECKED JTF — SCALE 1/8" = 1'-0"

APPROVAL RECOMMENDED: Ed Dennison, CHIEF ELECTRICAL SECTION — DESIGN DATE 6-16-64 — SPEC NO. F.S.D.-433

DRWG. NO. F8D-C-4619-E6

APPROVED FOR SAFETY — GENL. ENGR. & SAFETY OFFICE — DATE 15 June 64 — REF NO. E6

4619

MSFC MASTER BID DISK 11-18-2013

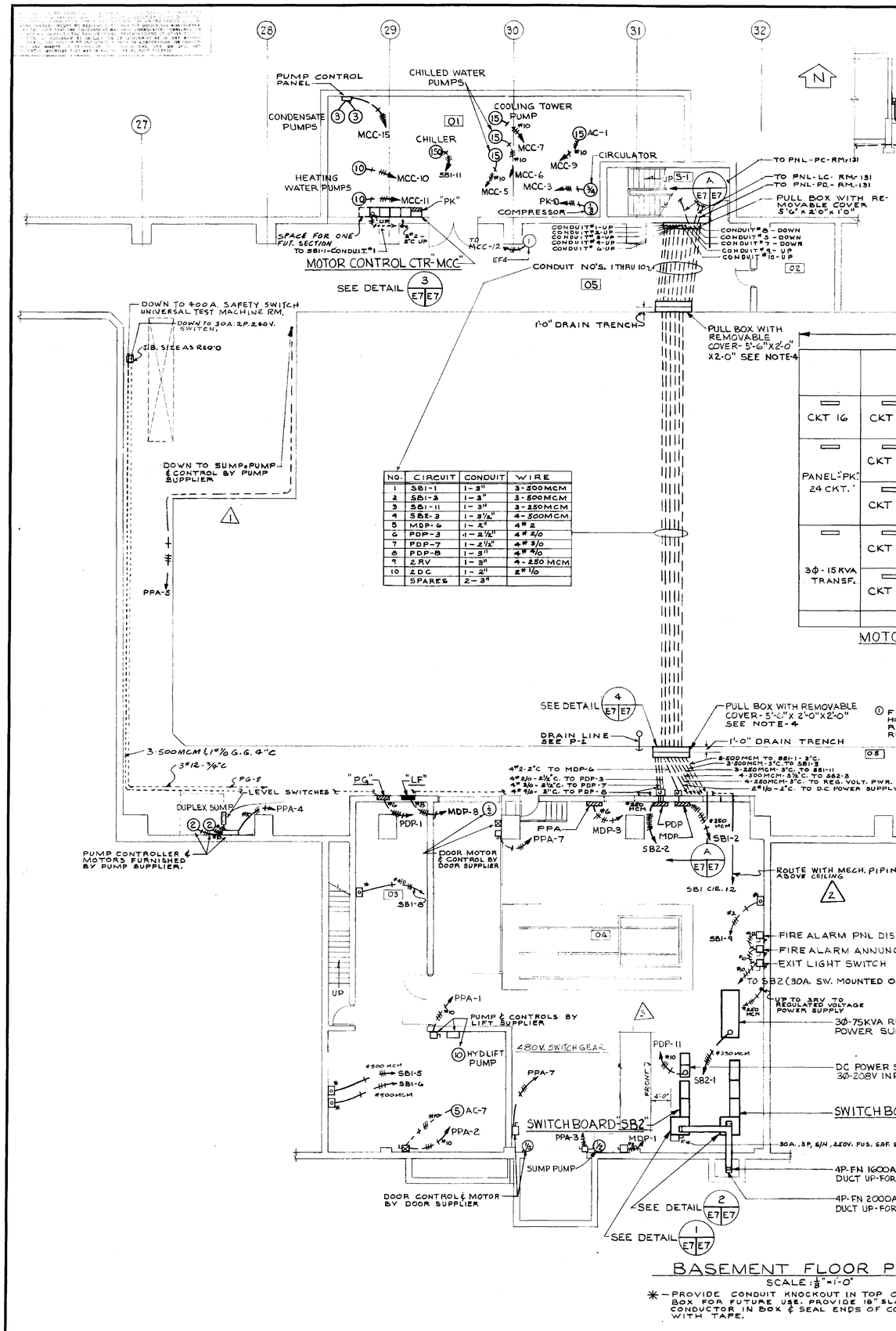

NO.	CIRCUIT	CONDUIT	WIRE
1	SBI-1	1-3"	3-500MCM
2	SBI-3	1-3"	3-500MCM
3	SBI-11	1-3"	3-250MCM
4	SB2-3	1-3½"	4-500MCM
5	MDP-6	1-2"	4#2
6	PDP-3	1-2½"	4#2/0
7	PDP-7	1-2½"	4#3/0
8	PDP-8	1-3"	4#4/0
9	2 RV	1-3"	4-250 MCM
10	2 DC	1-2"	2#1/0
	SPARES	2-3"	

BASEMENT FLOOR PLAN
SCALE: ⅛" = 1'-0"

* — PROVIDE CONDUIT KNOCKOUT IN TOP OF PULL BOX FOR FUTURE USE. PROVIDE 18" SLACK CONDUCTOR IN BOX & SEAL ENDS OF CONDUCTOR WITH TAPE.

NOTES:
1. FOR LEGEND SEE DWG E2
2. FOR CIRCUIT SCHEDULES SEE DWG E14 & E15
3. FOR FEEDER SIZES SEE SINGLE LINE DIAGRAM-DWG E3
4. FIELD CHECK MUST BE MADE TO CHECK FOR INTERFERENCE WITH DRAIN LINE. INSTALL CONDUIT TURN-UPS OUTSIDE OF DRAIN TRENCH AT TUNNEL WALL.

AS BUILT

3	J.M.	3-24-65	RELOCATED 480V. SWITCHGEAR		
2	J.M.	5-11-65	ADDED POWER FOR UNIVERSAL TEST MACHINE	12072-6	
1	J.M.	7-13-64	EXTENDED SERVICE FOR SUMP PUMP		
NO.	BY	DATE		C.I. NO.	APPROVED

NATIONAL AERONAUTICS AND SPACE ADMINISTRATION — M S F C — HUNTSVILLE ALABAMA

SANDERS & THOMAS INC. POTTSTOWN PA.-WASH., D.C.-MONT. ALA.

EXTENSION OF LOAD TEST ANNEX (BUILDING NO. 4619)

POWER

BASEMENT FLOOR PLAN

NASA AE CONT. NO. NAS 8-12014 — FILE NO. M S F C 9028

SUBMITTED: [signature] DATE: 12 MAY 64

APPROVAL RECOMMENDED: [signature] LAB. DATE: 6/11/64

APPROVAL RECOMMENDED: [signature] CHIEF ELECTRICAL SECTION DESIGN DATE: 6-16-64

APPROVED: [signature] CHIEF DESIGN BRANCH NASA DATE: 6-16-64

DESIGNED ROB DRAWN ROB CHECKED JSF

SCALE: ⅛" = 1'-0" — SPEC. NO. F & D-433 — DRWG. NO. F&D-C-4619-E7

APPROVED FOR SAFETY [signature] CPT. E.E.T.R. SAFETY OFFICE DATE

E7

4619

MSFC MASTER BID DISK 11-18-2013

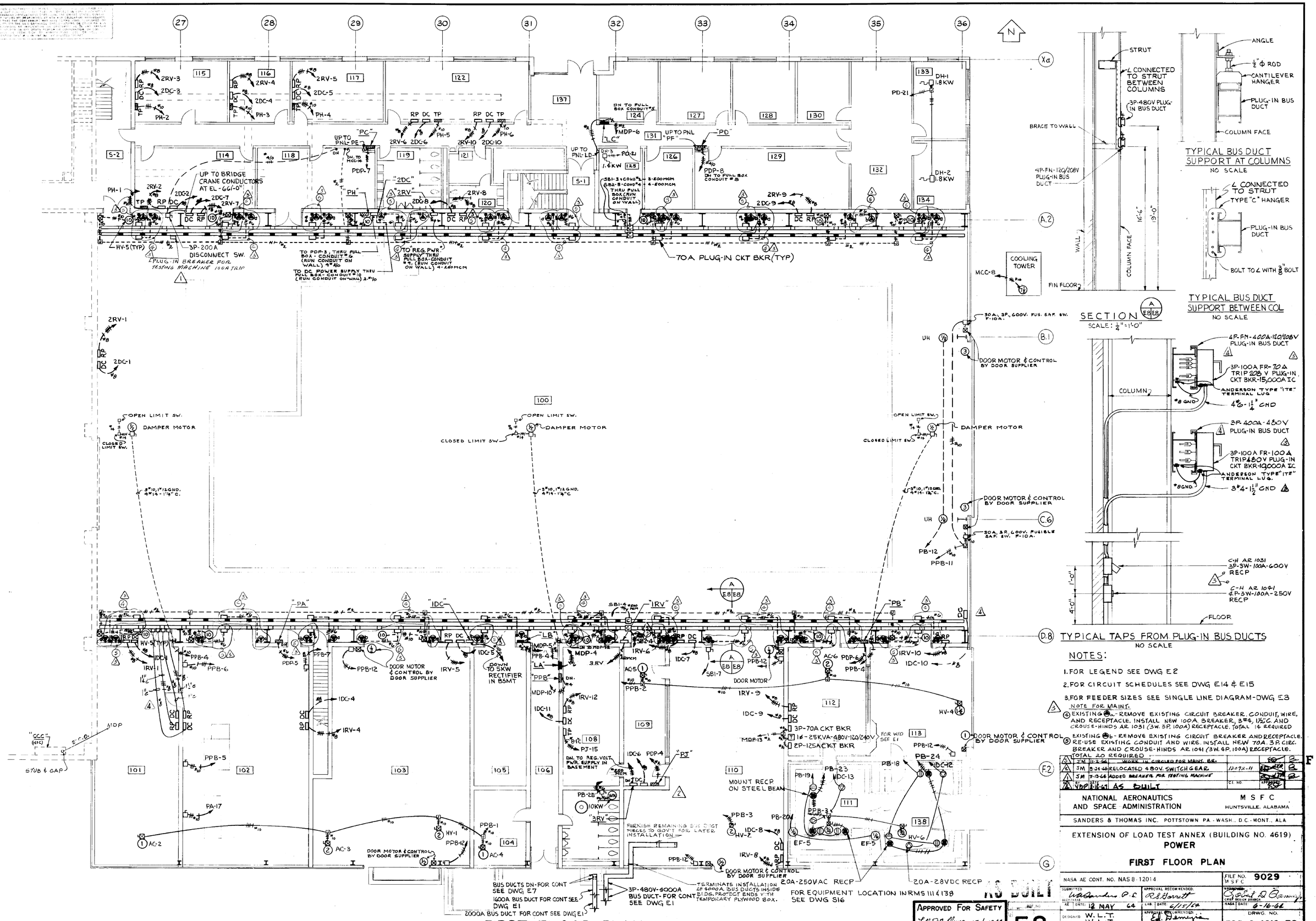

4619

MSFC MASTER BID DISK 11-18-2013

27 28 29 30 31 32 33 34 35 36 Xa A2 B1 C6 D8 F2 G

N

CHILLER
MOTOR CONTROL CENTER
01
UP
S-1
02
03
04
05
06
S-3

TIE TO EXIST. GRD BLDG. 4619

#6 RHW GREEN CONTINUE VIA CABLE TRAY & CONNECT TO INSTR. GROUND IN EXIST. BUILDING

EXIST INSTRUMENTATION GROUND WELL TO BE DEMOLISHED

SEE NOTE 2
INSTALL NEW GND. ROD FOR TEMP. GND. OUTSIDE OF THE EXCAVATION AREA

GROUND SYSTEM FOR BUILDING AND EQUIPMENT

#2/0 TO PULL BOX

ISOLATED GROUND SYSTEM FOR INSTRUMENTATION SUPPORT BUS ON 5'-0" CTRS

1¼" PLASTIC CND-1 #%

GROUND WELLS

EXISTING LOAD TEST ANNEX BUILDING

LEAD SHOT HANDLING SYSTEM (NIC)

TIE TO EXIST. GRD

STEEL BASE FRAME OF ISOLATION BLOCK SHALL BE GROUNDED

AC REGULATED POWER CENTER
DC REGULATED POWER CENTER
480V POWER DISTRIBUTION CENTER
120/208Y POWER DISTRIB CENTER

480V. SWITCHGEAR GRD. RUN & CONNECTION TO BE BY OTHERS

TERMINATE FOR FUTURE USE

℄ BUS DUCTS - SEE SHEET E-1

TO OUTDOOR SUBSTATION - SEE SHEET E-1

TO OUTDOOR SUBSTATION - SEE SHEET E-1

25'-0"

CLEARANCE = 3'-0" TYPICAL

BASEMENT PLAN
SCALE: ⅛" = 1'-0"

NOTES:

1. FOR LEGEND SEE DWG E10.
2. CONTRACTOR IS TO LOCATE, EXCAVATE AND PROTECT EXISTING INSTRUMENTATION GROUND TO BUILDING 4619 LOAD TEST ANNEX. A TEMPORARY GROUND CONSISTING OF ¾" x 10' RODS WILL BE INSTALLED AT A LOCATION DETERMINED IN THE FIELD. THE GROUND RESISTANCE SHALL BE A MAXIMUM OF FIVE OHMS MEASURED UNDER NORMALLY DRY CONDITIONS. BLDG 4619 GROUND SHALL BE CONNECTED TO THIS SYSTEM, BEFORE GROUND WELL IS DEMOLISHED AND UNTIL NEW INST. GROUN SYSTEM IS INSTALLED & CONNECTED.

AS BUILT

5	JM 15-2448 RELOCATED 480V SWITCHGEAR	12 MAY 64	
NO.	DESCRIPTION	DATE	APPROVED

NATIONAL AERONAUTICS AND SPACE ADMINISTRATION — M S F C HUNTSVILLE, ALABAMA

SANDERS & THOMAS INC. POTTSTOWN PA — WASH., D.C.-MONT., ALA.

EXTENSION OF LOAD TEST ANNEX (BUILDING NO. 4619)
GROUNDING
BASEMENT FLOOR PLAN

NASA M.E. CONT. NO. NAS 8-12014

SUBMITTED W.A. Sanders, P.E.	APPROVAL RECOMMENDED R.J. Garrett	FILE NO. M S F C	9030
DATE 12 MAY 64	LTR. DATE 6/15/64	APPROVED CHIEF, DESIGN BRANCH	
DESIGNED JW	APPROVAL RECOMMENDED Ed. Dimmick CHIEF ELECTRICAL SECTION	NASA DATE 6-16-64	
DRAWN JW	DESIGN DATE 6-16-64	DRWG. NO.	F&D-C-4619-E9
CHECKED JSF	SPEC. NO. F & D 433		
SCALE 1/8" = 1'-0"			

REF. NO. E9

APPROVED FOR SAFETY
Leon Myers 15 June 64
G.M. Corp. SAFETY OFFICE DATE

4619

MSFC MASTER BID DISK 11-18-2013

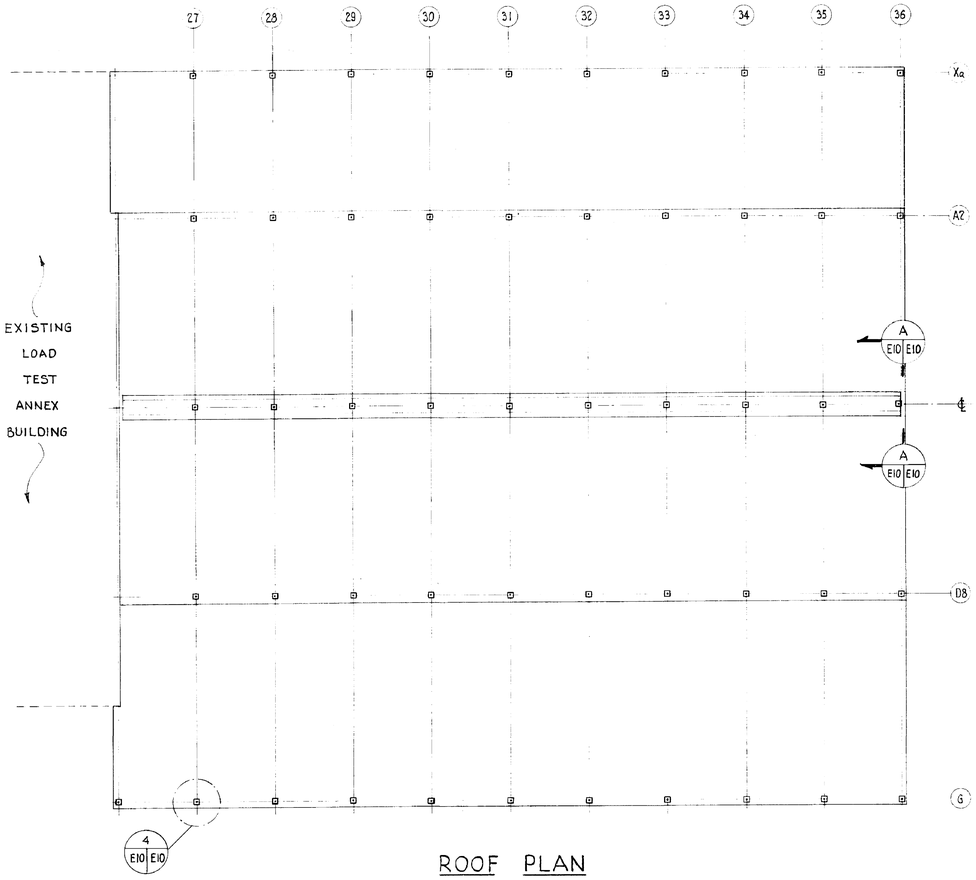

ROOF PLAN

SCALE: $\frac{1}{16}$"=1'-0"

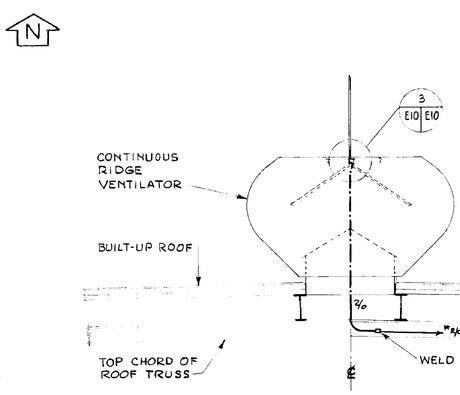

SECTION A E10 E10

SCALE: $\frac{1}{2}$"=1'-0"

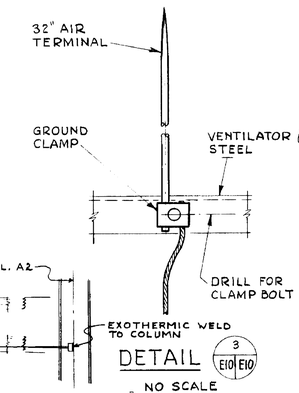

DETAIL 3 E10 E10

NO SCALE

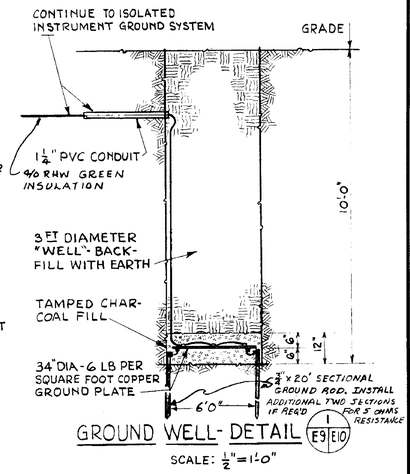

GROUND WELL- DETAIL 1 E9 E10

SCALE: $\frac{1}{2}$"=1'-0"

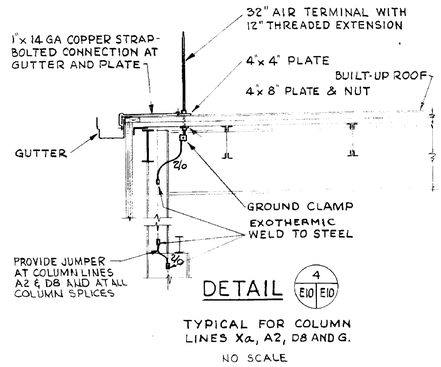

DETAIL 4 E10 E10

TYPICAL FOR COLUMN LINES Xa, A2, D8 AND G.

NO SCALE

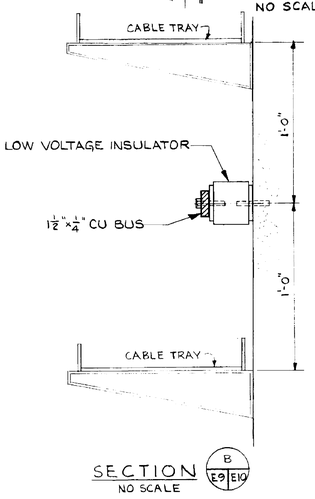

SECTION B E9 E10

NO SCALE

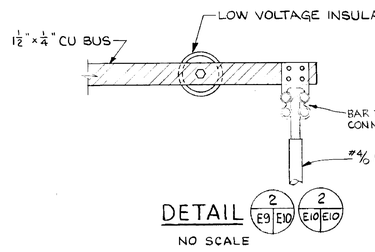

DETAIL 2 E9 E10 / 2 E10 E10

NO SCALE

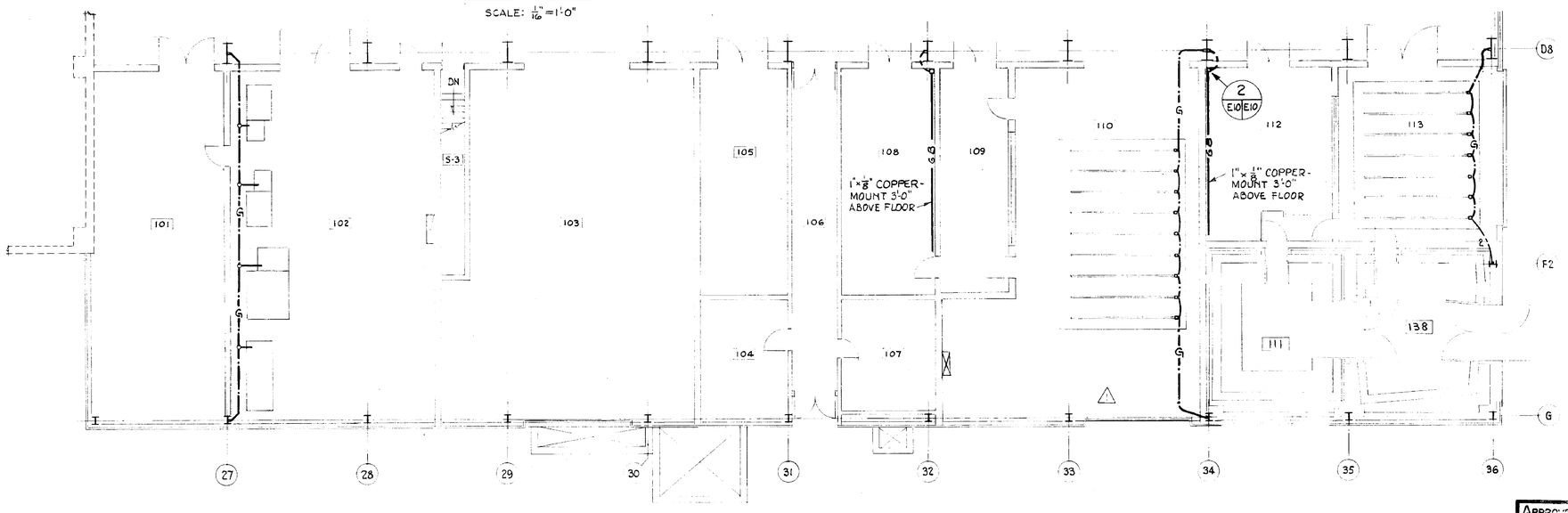

FIRST FLOOR PLAN

SCALE: $\frac{1}{8}$"=1'-0"

LEGEND:

- ⊛ GROUND ROD: ¾" x 10'-0" COPPER CLAD
- ⊶ OR ⊷ TERMINATIONS OR CONNECTIONS BY EXOTHERMIC WELD *UNLESS NOTED*
- —G— BURIED OR CONCEALED COPPER GROUND CABLE-#4/0 UNLESS NOTED
- —G— EXPOSED COPPER GROUND CONDUCTOR-#4/0 UNLESS NOTED
- —G— BURIED INSULATED COPPER GROUND CABLE IN PLASTIC CONDUIT-SIZE AS MARKED
- —GB— 1½"x¼" COPPER GROUND BAR *UNLESS NOTED*

⚠ JM 19365 RELOCATED 480V. SWITCHGEAR	12072-11		B
NO.	NOTE	CI NO	APPROVED

NATIONAL AERONAUTICS AND SPACE ADMINISTRATION — M S F C — HUNTSVILLE, ALABAMA

SANDERS & THOMAS INC. POTTSTOWN PA WASH. D.C.-MONT. ALA.

EXTENSION OF LOAD TEST ANNEX (BUILDING NO. 4619)

GROUNDING

FIRST FLOOR & ROOF PLAN

NAS8-12014 CONT. NO.

FILE NO M S F C: 9031

DRAWN	W.L. Sanders P.E.	APPROVAL RECOMMENDED	R.A. Harnett
DATE	12 MAY 64	LAB. DATE	6/15/64
TRACED	SW	APPROVAL RECOMMENDED	Ed. Dennison
DESIGNED	SW	CHIEF ELECTRICAL DESIGN DATE	6-16-64
CHECKED	JSM	SPEC. NO.	F&D-433
SCALE	AS NOTED		

APPROVED FOR SAFETY — Lucien Hyde, GEN. CHIEF SAFETY OFFICE, 13 June 64 DATE

E10

APPROVED Robert D Cummings — DIV. CHIEF DESIGN BRANCH — NASA DATE 6-16-64

DRAWING NO. F&D-C-4619-E10

4619

MSFC MASTER BID DISK 11-18-2013

LEGEND - COMMUNICATIONS AND ALARM

- TELEPHONE OUTLET MOUNTED 12 INCHES ABOVE FLOOR UNLESS OTHERWISE NOTED - *SEE TYP. DET. - DWG. E13.*
- INTERCOM STATION CONSISTING OF 2 HEAD SET PLUG-IN JACKS AND 1 SELECTOR SWITCH
- SPEAKER MOUNT 10'-0" IN TEST AREA & 10'-0" MAX. IN OTHER AREAS
- MANUAL FIRE ALARM BOX MOUNTED 4'-0" ABOVE FLOOR
- FIRE ALARM BELL
- FIRE DETECTOR (2 UNITS - 1 FOR ALARM, 1 FOR ANNUNCIATION)
- CABLE TRAY 24" WIDE × 4" DEEP
- CABLE TRAY 12" WIDE × 3" DEEP MOUNTED ABOVE CEILING
- VC VOLUME CONTROL UNIT
- (J) JUNCTION BOX WITH TERMINAL BLOCK
- C.O. CONDUIT ONLY
- PORTABLE DESK SET & CORD CONNECTED MICROPHONE (SEE DETAIL DWG E13)

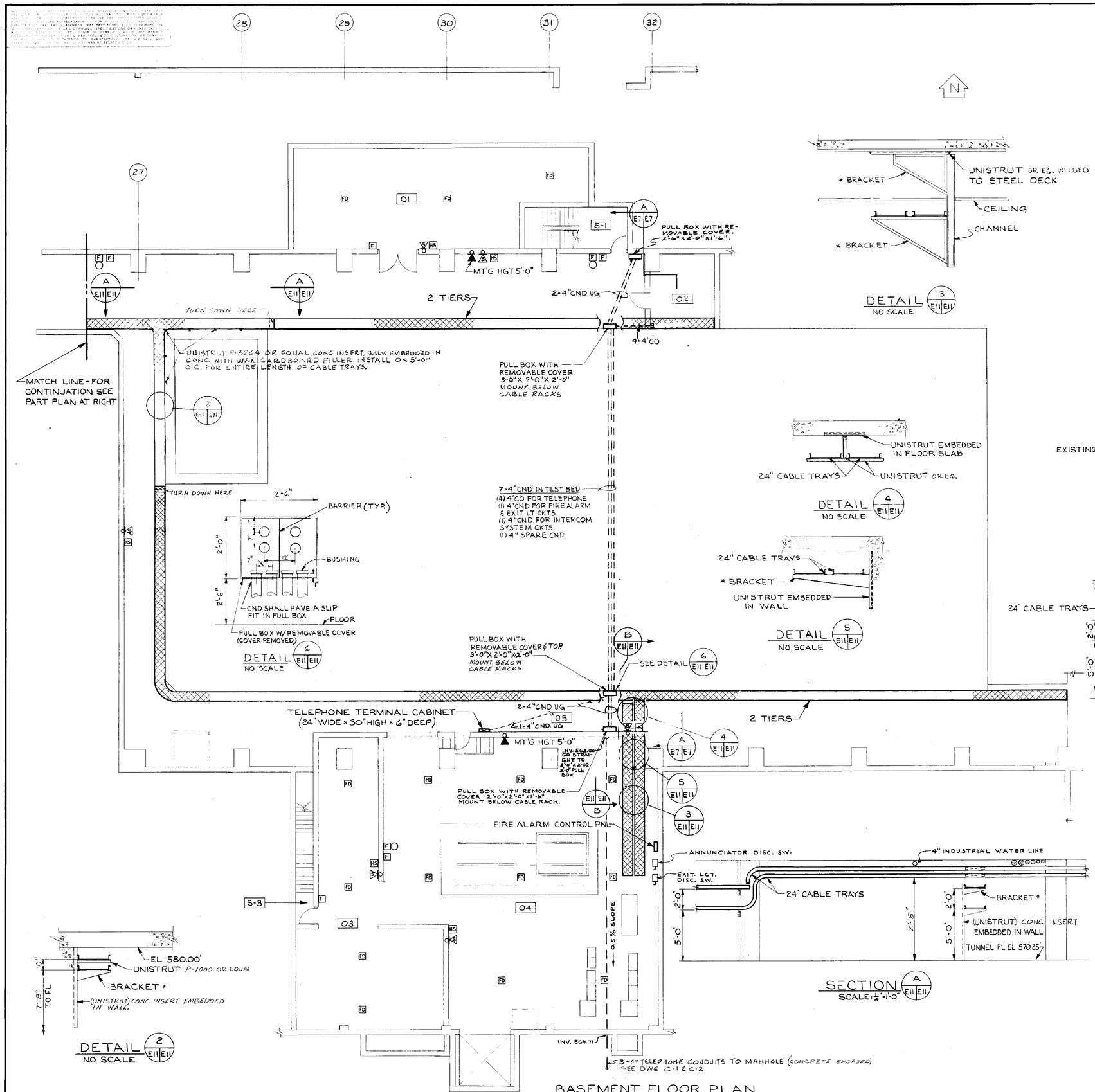

DETAIL 3 E11 E11 — NO SCALE

DETAIL 4 E11 E11 — NO SCALE

DETAIL 5 E11 E11 — NO SCALE

DETAIL 6 E11 E11 — NO SCALE

DETAIL 2 E11 E11 — NO SCALE

SECTION A E11 E11 — SCALE: 1/2" = 1'-0"

BASEMENT FLOOR PLAN
SCALE: 1/8" = 1'-0"

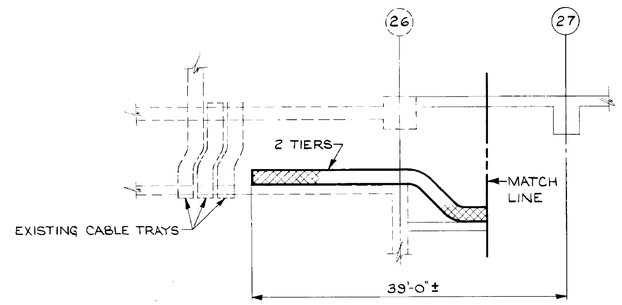

PART BASEMENT FLOOR PLAN
SCALE: 1/8" = 1'-0"

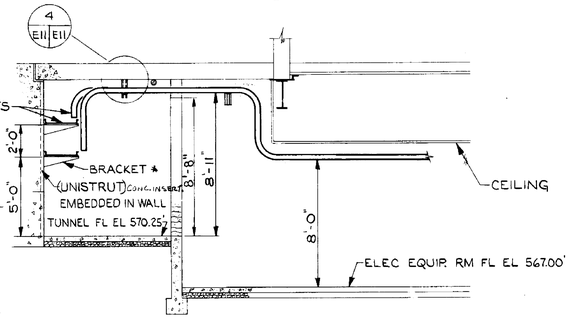

SECTION B E11 E11 — SCALE: 1/4" = 1'-0"

NOTE:

1. UNISTRUT SHALL BE EMBEDDED IN THE TUNNEL WALL ON 5'-0" CTRS FROM FLOOR TO CEILING FOR THE FULL LENGTH OF THE CABLE TRAYS FOR SUPPORT OF THE TRAYS.
2. CABLE TRAYS SHALL SUPPORTED ON 5'-0" CTRS. MAX.
3. FOR TELEPHONE FIRE ALARM & COMMUNICATIONS RISER DIAGRAMS SEE DWG. E13.
4. * BRACKETS ARE TO BE UNISTRUT P-2555 OR P-2566 OR EQUAL.

REV. BY	DATE	CI. NO.	APPROVED

NATIONAL AERONAUTICS AND SPACE ADMINISTRATION — M S F C — HUNTSVILLE, ALABAMA

SANDERS & THOMAS INC. POTTSTOWN PA. - WASH. D.C. - MONT. ALA.

EXTENSION OF LOAD TEST ANNEX (BUILDING NO. 4619)

COMMUNICATIONS BASEMENT FLOOR PLAN

AS BUILT

APPROVED FOR SAFETY — 15 June 64 — REV NO. E11

NASA AE CONT. NO. NAS8-12014

FILE NO. M S F C 9032

SUBMITTED: W.P. Sanders P.E. — APPROVAL RECOMMENDED: R.J. Harnett — APPROVED: Robert D. Cramer

DESIGNED WLT — DRAWN WLT — CHKD JFF — AE DATE 12 MAY 64 — LAB DATE 6/17/64 — NASA DATE 6-16-64

SCALE 1/8" = 1'-0" — APPROVAL RECOMMENDED: Eli Feinman, CHIEF ELECTRICAL DESIGN SECTION — DESIGN DATE 6-16-64 — SPEC. NO. F & D-433

DRWG. NO. F&D-C-4619-E11

4619

MSFC MASTER BID DISK 11-18-2013

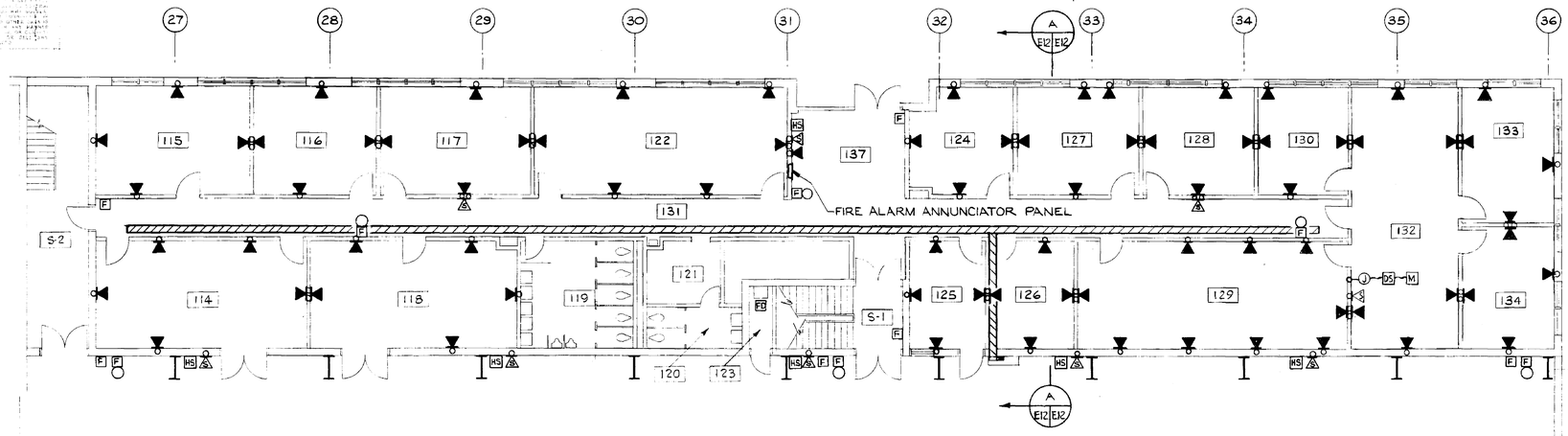

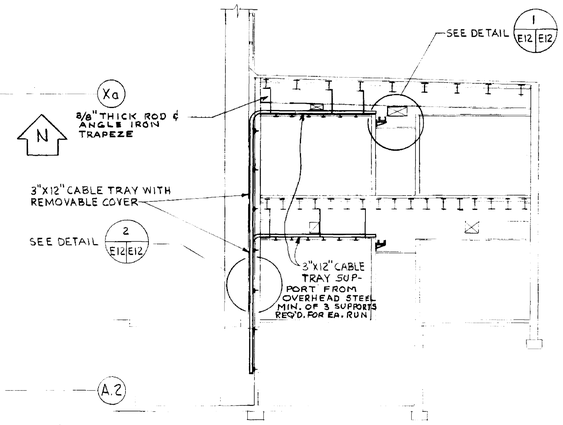

SECTION A E12 E12
SCALE: 1/8"=1'-0"

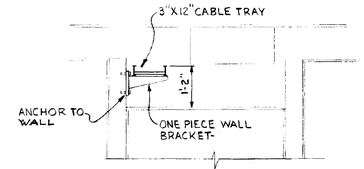

DETAIL 1 E12 E12
SCALE: 1/2"=1'-0"

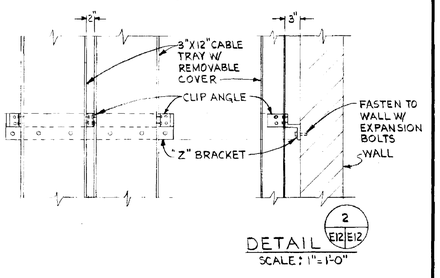

DETAIL 2 E12 E12
SCALE: 1"=1'-0"

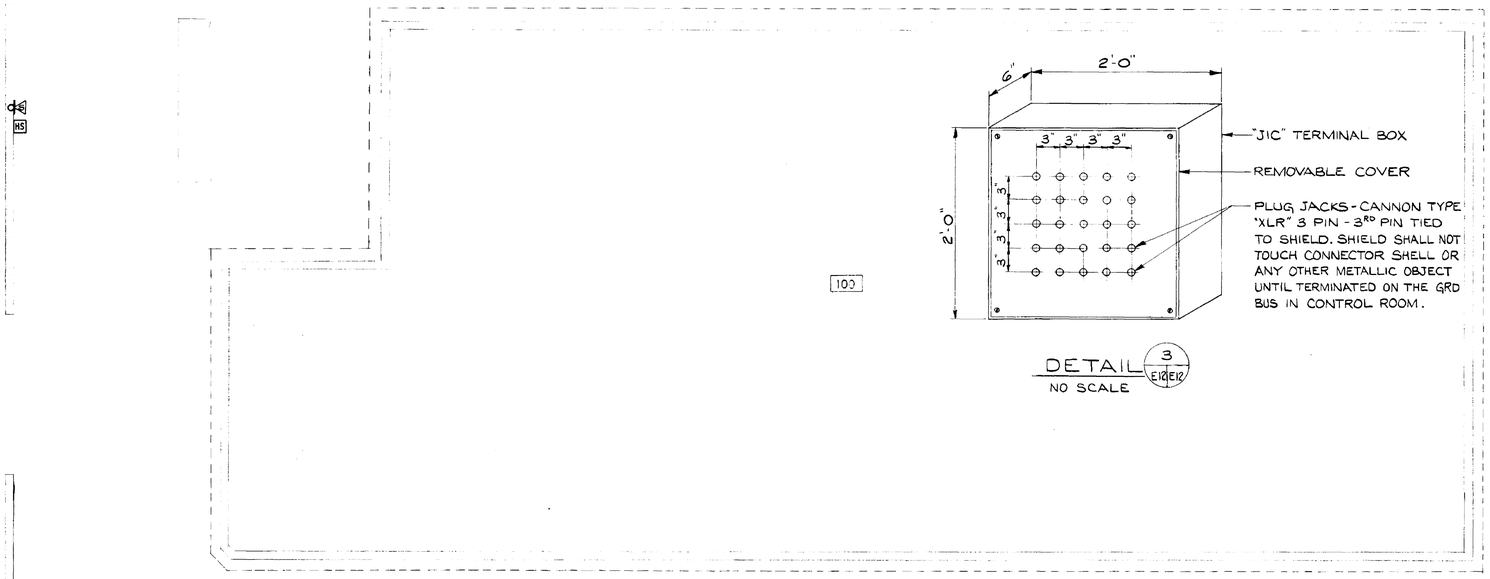

DETAIL 3 E12 E12
NO SCALE

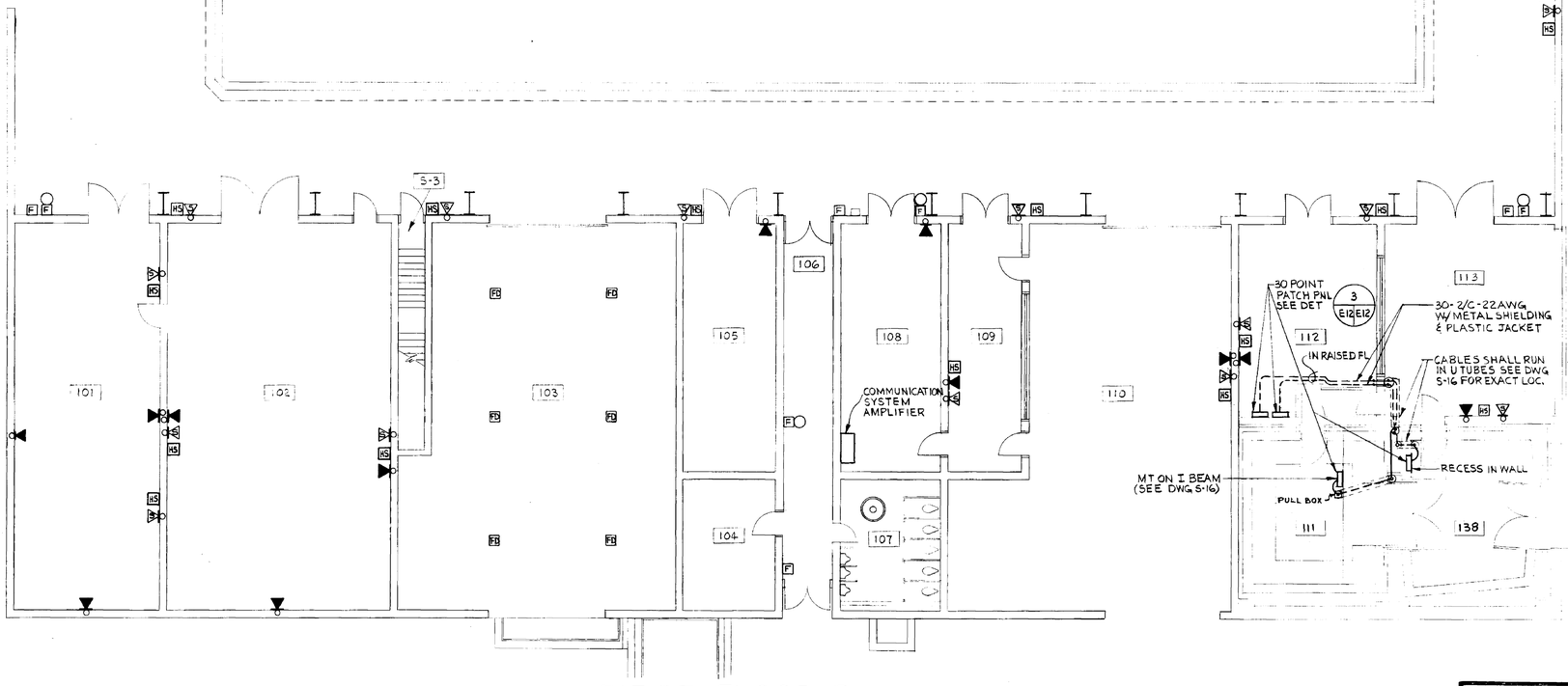

FIRST FLOOR PLAN
SCALE: 1/8"=1'-0"

NOTES:

1. FOR LEGEND SEE DWG E11
2. FOR TELEPHONE, FIRE ALARM & COMMUNICATIONS RISER DIAGRAMS SEE DWG E13

AS BUILT

REV. BY	DATE	CT. NO.	APPROVED

NATIONAL AERONAUTICS AND SPACE ADMINISTRATION — M S F C — HUNTSVILLE, ALABAMA

SANDERS & THOMAS INC. POTTSTOWN PA. - WASH. D.C. - MONT., ALA.

EXTENSION OF LOAD TEST ANNEX (BUILDING NO. 4619)

COMMUNICATIONS FIRST FLOOR PLAN

NASA AE CONT NO. NAS 8-12014 — FILE NO M S F C 9033

SUBMITTED: W.A. Sanders, P.E. SECY-TREAS. AE	APPROVAL RECOMMENDED: R.S. Harrett CHIEF DESIGN ENGR.	APPROVED: Robert D. Hamrick NASA
DATE: 12 MAY 64	LAB DATE: 6/17/64	DATE: 6-16-64
DESIGNED WLT DRAWN WLT CHECKED JJA	APPROVAL RECOMMENDED: Ed. Demyan CHIEF ELECTRICAL SECTION	DRWG. NO. F&D-C-4619-E12
SCALE 1/8"=1'-0"	DESIGN DATE: 6-16-64 SPEC. NO. F & D-433	

APPROVED FOR SAFETY — Lt. Col. Myers — 15 June 64 DATE — U.S. ARMY SAFETY OFFICE

REF NO. E12

4619

MSFC MASTER BID DISK 11-18-2013

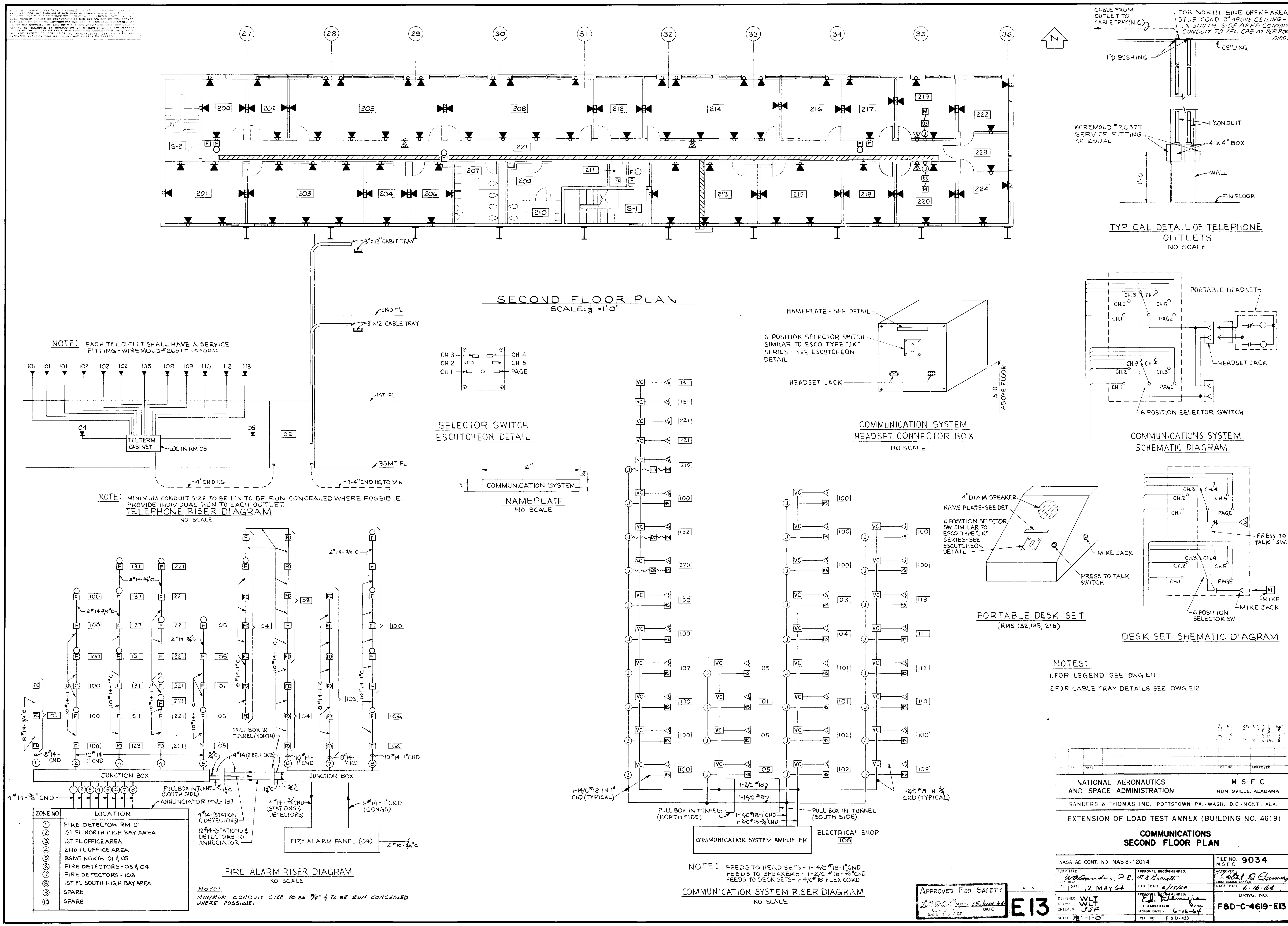
SECOND FLOOR PLAN
SCALE: 1/8"=1'-0"
TYPICAL DETAIL OF TELEPHONE OUTLETS
NO SCALE
CABLE FROM OUTLET TO CABLE TRAY (NIC)
FOR NORTH SIDE OFFICE AREA STUB COND 3" ABOVE CEILING - IN SOUTH SIDE AREA CONTINUE CONDUIT TO TEL CAB AS PER RISER DIAG.
1"Φ BUSHING
CEILING
WIREMOLD #2657T SERVICE FITTING OR EQUAL
1" CONDUIT
4"x4" BOX
WALL
FIN FLOOR
NOTE: EACH TEL OUTLET SHALL HAVE A SERVICE FITTING - WIREMOLD #2657T OR EQUAL
TEL TERM CABINET
LOC IN RM 05
2ND FL
1ST FL
BSMT FL
3"X12" CABLE TRAY
4"CND UG
3-4"CND UG TO M.H.
NOTE: MINIMUM CONDUIT SIZE TO BE 1" & TO BE RUN CONCEALED WHERE POSSIBLE. PROVIDE INDIVIDUAL RUN TO EACH OUTLET.
TELEPHONE RISER DIAGRAM
NO SCALE
SELECTOR SWITCH ESCUTCHEON DETAIL
CH 3
CH 2
CH 1
CH 4
CH 5
PAGE
COMMUNICATION SYSTEM
NAMEPLATE
NO SCALE
NAMEPLATE - SEE DETAIL
6 POSITION SELECTOR SWITCH SIMILAR TO ESCO TYPE "JK" SERIES - SEE ESCUTCHEON DETAIL
HEADSET JACK
5'-0" ABOVE FLOOR
COMMUNICATION SYSTEM HEADSET CONNECTOR BOX
NO SCALE
PORTABLE HEADSET
HEADSET JACK
6 POSITION SELECTOR SWITCH
COMMUNICATIONS SYSTEM SCHEMATIC DIAGRAM
4" DIAM SPEAKER
NAME PLATE - SEE DET.
6 POSITION SELECTOR SW SIMILAR TO ESCO TYPE "JK" SERIES - SEE ESCUTCHEON DETAIL
MIKE JACK
PRESS TO TALK SWITCH
PORTABLE DESK SET
(RMS 132, 135, 218)
PRESS TO TALK SW.
MIKE
MIKE JACK
6 POSITION SELECTOR SW
DESK SET SHEMATIC DIAGRAM
NOTES:
1. FOR LEGEND SEE DWG E11
2. FOR CABLE TRAY DETAILS SEE DWG E12
JUNCTION BOX
PULL BOX IN TUNNEL (NORTH)
PULL BOX IN TUNNEL (SOUTH SIDE)
ANNUNCIATOR PNL-137
4#14-(STATION & DETECTORS)
12#14-(STATIONS & DETECTORS TO ANNUNCIATOR
4#14-3/4"CND-(STATIONS & DETECTORS)
6#14-1"CND (GONGS)
FIRE ALARM PANEL (04)
2#10-3/4"C
FIRE ALARM RISER DIAGRAM
NO SCALE
NOTE: MINIMUM CONDUIT SIZE TO BE 3/4" & TO BE RUN CONCEALED WHERE POSSIBLE.
ZONE NO | LOCATION
1 FIRE DETECTOR RM 01
2 1ST FL NORTH HIGH BAY AREA
3 1ST FL OFFICE AREA
4 2ND FL OFFICE AREA
5 BSMT NORTH 01 & 05
6 FIRE DETECTORS - 03 & 04
7 FIRE DETECTORS - 103
8 1ST FL SOUTH HIGH BAY AREA
9 SPARE
10 SPARE
1-1/4C #18 IN 1" CND (TYPICAL)
1-2/C #8 IN 3/4" CND (TYPICAL)
PULL BOX IN TUNNEL (NORTH SIDE)
PULL BOX IN TUNNEL (SOUTH SIDE)
COMMUNICATION SYSTEM AMPLIFIER
ELECTRICAL SHOP 108
NOTE: FEEDS TO HEAD SETS - 1-1/4C #18-1"CND
FEEDS TO SPEAKERS - 1-2/C #18-3/4"CND
FEEDS TO DESK SETS - 1-1/4C #18 FLEX CORD
COMMUNICATION SYSTEM RISER DIAGRAM
NO SCALE
APPROVED FOR SAFETY
E13
NATIONAL AERONAUTICS AND SPACE ADMINISTRATION
M S F C
HUNTSVILLE, ALABAMA
SANDERS & THOMAS INC. POTTSTOWN PA - WASH. D.C. - MONT. ALA
EXTENSION OF LOAD TEST ANNEX (BUILDING NO. 4619)
COMMUNICATIONS
SECOND FLOOR PLAN
NASA AE CONT. NO. NAS 8-12014
FILE NO. MSFC 9034
12 MAY 64
DESIGNED WLT
DRAWN WLT
CHECKED JJF
SCALE 1/8"=1'-0"
DRWG. NO.
F&D-C-4619-E13
4619

NOTICE — WHEN GOVERNMENT DRAWINGS, SPECIFICATIONS, OR OTHER DATA ARE USED FOR ANY PURPOSE OTHER THAN IN CONNECTION WITH A DEFINITELY RELATED GOVERNMENT PROCUREMENT OPERATION, THE UNITED STATES GOVERNMENT THEREBY INCURS NO RESPONSIBILITY NOR ANY OBLIGATION WHATSOEVER; AND THE FACT THAT THE GOVERNMENT MAY HAVE FORMULATED, FURNISHED, OR IN ANY WAY SUPPLIED THE SAID DRAWINGS, SPECIFICATIONS, OR OTHER DATA IS NOT TO BE REGARDED BY IMPLICATION OR OTHERWISE AS IN ANY MANNER LICENSING THE HOLDER OR ANY OTHER PERSON OR CORPORATION, OR CONVEYING ANY RIGHTS OR PERMISSION TO MANUFACTURE, USE, OR SELL ANY PATENTED INVENTION THAT MAY IN ANY WAY BE RELATED THERETO.

POWER PANEL "PA" CIRCUIT SCHEDULE
120/208V-3Ø-4W-100A MAINS

CKT	FOR	VOLT	BREAKER POLE	BREAKER AMP	KVA LOAD ØA	KVA LOAD ØB	KVA LOAD ØC	BREAKER POLE	BREAKER AMP	VOLT	FOR	CKT
1	RECP-100 & 103	120	1	20	1.6			1	20	120	RECP-100, 101 & 102	2
3	RECP-100 & 102					2.0					RECP-100 & 101	4
5	RECP-102 & 103						2.2				RECP-103 & 105	6
7	RECP-101 & 102				2.0						RECP-103 & 104	8
9	RECP-100, 105 & 106					1.4					EMERG LTG UNITS (4)	10
11	LTG-100						1.4				SPARE	12
13	SPARE				—							14
15	SPARE	↓	↓	↓		—		↓	↓	↓		16
17	TEST MACHINE	208	3	30	2.0	2.0	2.0	3	30	208	↓	18
	TOTALS				5.6	5.4	5.6					

POWER PANEL "PE" CIRCUIT SCHEDULE
120/208V-3Ø-4W-225 A MAINS

CKT	FOR	VOLT	BREAKER POLE	BREAKER AMP	KVA LOAD ØA	KVA LOAD ØB	KVA LOAD ØC	BREAKER POLE	BREAKER AMP	VOLT	FOR	CKT
1	RECP-206, 207 & 209	120	1	20	2.0			1	20	120	RECP-204 & 206	2
3	RECP-203					2.2					RECP-201 & 203	4
5	RECP-201						1.6				RECP-200 & 202	6
7	RECP-202 & 205				2.0						RECP-205 & 208	8
9	RECP-205 & 208					2.0					RECP-208	10
11	RECP-208						1.7				LTG-S-2	12
13	EMER LTG UNITS (5)	↓	↓	↓	1.0			↓	↓	↓	(1) 1/6 HP EF-2	14
15	SPARE					—					SPARE	16
17	SPARE						—				↓	18
	TOTALS				5.0	4.2	3.3					

REGULATED VOLTAGE PANEL "1RV" CIRCUIT SCHEDULE
120/208V-3Ø-4W-225A MAINS

CKT	FOR	VOLT	BREAKER POLE	BREAKER AMP	KVA LOAD ØA	KVA LOAD ØB	KVA LOAD ØC	BREAKER POLE	BREAKER AMP	VOLT	FOR	CKT
1	RP PANEL-100	208	3	40	4.0	4.0	4.0	3	40	208	RP PANEL-102	2
3	RP PANEL-101				4.0	4.0	4.0				RP PANEL-102	4
5	RP PANEL-100				4.0	4.0	4.0				RP PANEL-100	6
7	SPARE				2.0	2.0	2.0				RP PANEL-110	8
9	RP PANEL-112				4.0	4.0	4.0				RP PANEL-100	10
11	SPARE				—	—	—				SPARE	12
13	SPARE	↓	↓	↓	—	—	—	↓	↓	↓	SPARE	14
	TOTALS				18.0	18.0	18.0					

POWER PANEL "PB" CIRCUIT SCHEDULE
120/208V-3Ø-4W-100A MAINS

CKT	FOR	VOLT	BREAKER POLE	BREAKER AMP	KVA LOAD ØA	KVA LOAD ØB	KVA LOAD ØC	BREAKER POLE	BREAKER AMP	VOLT	FOR	CKT
1	RECP-100 & 113 & O.D. LGT.	120	1	20	1.8			1	20	120	RECP-100, 110 & 112	2
3	RECP-112 & 113 & O.D. LGT.					2.0					RECP-110 & 112	4
5	RECP-100, 109 & 110						2.2				RECP-100, 107 & 108 & EF-3 1/6 HP	6
7	RECP-109 & 110 & O.D. LGT.				2.0						RECP-108 & 109	8
9	RECP-AMPLIFIER					.4					EMERG LIGHTING	10
11	LTG-100						1.0				UNIT HTRS (2) 1/8 HP	12
13	LTG-138				2.1						LTG-111	14
15	LTG-138					1.8					LTG-111	16
17	LTG-138						1.9				RECP.-138	18
19	RECP-111				1.2						(2) 1/6 HP EF-5	20
21	SPARE	↓	↓			—		↓		↓	SPARE	22
23	RECP-111	208	3	↓	.4	.4	.4	3		208	RECP-138	24
25	10KW WATER HTR	208	2	50	1.0	1.0		3	↓	208	↓	26
	TOTALS				8.5	5.6	6.8					

POWER PANEL "PF" CIRCUIT SCHEDULE
120/208V-3Ø-4W-225A MAINS

CKT	FOR	VOLT	BREAKER POLE	BREAKER AMP	KVA LOAD ØA	KVA LOAD ØB	KVA LOAD ØC	BREAKER POLE	BREAKER AMP	VOLT	FOR	CKT
1	RECP-213 & 215	120	1	20	2.2			1	20	120	RECP-214 & 216	2
3	RECP-215, 218					2.1					RECP-214	4
5	RECP-212 & 214						1.6				RECP & LTG-211 & S1	6
7	RECP-213				2.2						RECP-216 & 217	8
9	RECP-217, 219 & 222					2.2					RECP-220, 223 & 224	10
11	RECP-222 & 223						1.8				RECP-220, 224	12
13	SPARE				—						SPARE	14
15						—						16
17	↓	↓	↓				—	↓		↓		18
19	DUCT HEATERS	208	3	↓	.7	.7	.7	3	↓	208	↓	20
	TOTALS				5.1	5.0	4.1					

REGULATED VOLTAGE PANEL "2RV" CIRCUIT SCHEDULE
120/208V-3Ø-4W-225A MAINS

CKT	FOR	VOLT	BREAKER POLE	BREAKER AMP	KVA LOAD ØA	KVA LOAD ØB	KVA LOAD ØC	BREAKER POLE	BREAKER AMP	VOLT	FOR	CKT
1	RP PANEL-100	208	3	40	4.0	4.0	4.0	3	40	208	RP PANEL-114	2
3	RP PANEL-115				4.0	4.0	4.0				RP PANEL-116	4
5	RP PANEL-117				4.0	4.0	4.0				RP PANEL-122	6
7	RP PANEL-100				4.0	4.0	4.0				RP PANEL-100	8
9	RP PANEL-100				4.0	4.0	4.0				RP PANEL-122	10
11	SPARE				—	—	—				SPARE	12
13	SPARE	↓	↓	↓	—	—	—	↓	↓	↓	SPARE	14
	TOTALS				20.0	20.0	20.0					

POWER PANEL "PC" CIRCUIT SCHEDULE
120/208V-3Ø-4W-225 A MAINS

CKT	FOR	VOLT	BREAKER POLE	BREAKER AMP	KVA LOAD ØA	KVA LOAD ØB	KVA LOAD ØC	BREAKER POLE	BREAKER AMP	VOLT	FOR	CKT
1	RECP-116 & 117	120	1	20	2.0			1	20	120	RECP-122	2
3	RECP-117 & 122					2.0					RECP-122 & LGT'S.	4
5	RECP-115 & 116						2.2				RECP-100, 114 & S2	6
7	RECP-115 & 116				1.6						RECP-100	8
9	RECP-114, 118 & 131					1.8					RECP-118, 119 & 121	10
11	RECP-100, 114 & 118						2.0				RECP-100, 118 & 119	12
13	EMERG LIGHTING				1.5						LTG-100	14
15	SPARE					—					SPARE	16
17	SPARE	↓	↓	↓			—	↓	↓	↓	SPARE	18
	TOTALS				5.1	3.8	4.2					

POWER PANEL "PG" CIRCUIT SCHEDULE
120/208V-3Ø-4W-100A MAINS

CKT	FOR	VOLT	BREAKER POLE	BREAKER AMP	KVA LOAD ØA	KVA LOAD ØB	KVA LOAD ØC	BREAKER POLE	BREAKER AMP	VOLT	FOR	CKT
1	RECP-03	120	1	20	1.8			1	20	120	RECP-04	2
3	RECP-05					1.1					RECP-04	4
5	RECP-05						2.1				RECP-03 & 04, LT.-103	6
7	EMERG LIGHTING				.7						CONT. CONSOLE (G.F.E.)	8 △1
9	SPARE					—					SPARE	10
11	SPARE	↓	↓	↓			—	↓	↓	↓	SPARE	12
	TOTALS				2.5	1.1	2.1					

DIRECT CURRENT PANEL "1DC" CIRCUIT SCHEDULE
50V-DC-1Ø-2W-225A MAINS

CKT	FOR	VOLT	BREAKER POLE	BREAKER AMP	KVA LOAD BUS 1	KVA LOAD BUS 2	BREAKER POLE	BREAKER AMP	VOLT	FOR	CKT
1	DC PANEL-100	50	2	40	.4	.4	2	40	50	DC PANEL-101	2
3	DC PANEL-102				.4	.4				DC PANEL-102	4
5	DC PANEL-100				.4	.4				DC PANEL-109	6
7	DC PANEL-100				.4	.4				DC PANEL-110	8
9	DC PANEL-112				.4	.4		↓		DC PANEL-100	10
11	DC PANEL-108			↓	.4	.4		20		RECP-138	12
13	RECP-111			20	.2	.2				SPARE	14
15	SPARE				—	—					16
17	↓	↓	↓	↓	—	—	↓	↓	↓	↓	18
	TOTALS				2.6	2.6					

DIRECT CURRENT PANEL "2DC" CIRCUIT SCHEDULE
50V-DC-1Ø-2W-225A MAINS

CKT	FOR	VOLT	BREAKER POLE	BREAKER AMP	KVA LOAD BUS 1	KVA LOAD BUS 2	BREAKER POLE	BREAKER AMP	VOLT	FOR	CKT
1	DC PANEL-100	50	2	40	.4	.4	2	40	50	DC PANEL-114	2
3	DC PANEL-115				.4	.4				DC PANEL-116	4
5	DC PANEL-117				.4	.4				DC PANEL-122	6
7	DC PANEL-100				.4	.4				DC PANEL-100	8
9	DC PANEL-100				.2	.2				DC PANEL-122	10
11	SPARE				—	—				SPARE	12
13					—	—					14
15					—	—					16
17	↓	↓	↓	↓	—	—	↓	↓	↓	↓	18
	TOTALS				1.8	1.8					

POWER PANEL "PD" CIRCUIT SCHEDULE
120/208V-3Ø-4W-225A MAINS

CKT	FOR	VOLT	BREAKER POLE	BREAKER AMP	KVA LOAD ØA	KVA LOAD ØB	KVA LOAD ØC	BREAKER POLE	BREAKER AMP	VOLT	FOR	CKT
1	RECP-124, 127 & 137	120	1	20	2.2			1	20	120	RECP-100, 126, 129 & 131	2
3	RECP-127, 128, 130					2.2					RECP-100, 125 & 126	4
5	RECP-129, 131						1.3				RECP-100	6
7	RECP-129, 132, 134, EF-3 1/6 HP				1.3						RECP-100	8
9	RECP-132, 133, 134					2.0					RECP-127, 128 & 132	10
11	SPARE						2.2				RECP-132 & 133	12
13	RECP-100, 135 & 136				1.9						RECP-100 & 123, STW. LT.	14
15	EMERG LIGHTING					.9					LTG-100	16
17	FLOODLIGHTING						1.5				SPARE	18
19	SPARE	↓	↓		—			↓		↓		20
21	DUCT HEATERS	208	3	↓	1.5	1.5	1.5	3	↓	208	↓	22
	TOTALS				6.9	6.6	6.5					

POWER PANEL "PH" CIRCUIT SCHEDULE
120/208V-3Ø-4W-225A MAINS

CKT	FOR	VOLT	BREAKER POLE	BREAKER AMP	KVA LOAD ØA	KVA LOAD ØB	KVA LOAD ØC	BREAKER POLE	BREAKER AMP	VOLT	FOR	CKT
1	TECH POWER PANEL	208	3	30	4.0	4.0	4.0	3	30	208	TECH POWER PANEL	2
3	TECH POWER PANEL				4.0	4.0	4.0				TECH POWER PANEL	4
5	TECH POWER PANEL				4.0	4.0	4.0				TECH POWER PANEL	6
7	SPARE				—	—	—				SPARE	8
9					—	—	—					10
11					—	—	—					12
13	↓ TOTALS	↓	↓	↓	12.0	12.0	12.0	↓	↓	↓	↓	14

POWER PANEL "PJ" CIRCUIT SCHEDULE
120/208V-3Ø-4W-225A MAINS

CKT	FOR	VOLT	BREAKER POLE	BREAKER AMP	KVA LOAD ØA	KVA LOAD ØB	KVA LOAD ØC	BREAKER POLE	BREAKER AMP	VOLT	FOR	CKT
1	FIXED RACK	120	1	20	2.0			1	20	120	FIXED RACK	2
3						2.0						4
5	↓						2.0				↓	6
7	RECORDER RACK				2.0						RECORDER RACK	8
9						2.0					RECORDER RACK	10
11	↓			↓			1.0		↓		SPARE	12
13	PORTABLE RACK	↓	↓	30	1.5			↓	30	↓		14
15	TECH POWER PANEL	208	3	40	4.0	4.0	4.0	3	40	208	↓	16
	TOTALS				9.5	8.0	7.0					

REGULATED VOLTAGE PANEL "3RV" CIRCUIT SCHEDULE
120/208V-3Ø-4W-225A MAINS

CKT	FOR	VOLT	BREAKER POLE	BREAKER AMP	KVA LOAD ØA	KVA LOAD ØB	KVA LOAD ØC	BREAKER POLE	BREAKER AMP	VOLT	FOR	CKT
1	FIXED RACK	120	1	20	2.0			1	20	120	FIXED RACK	2
3	↓					2.0						4
5							2.0				↓	6
7	RECORDER RACK				2.0						RECORDER RACK	8
9						2.0					RECORDER RACK	10
11	↓			↓			1.0		↓		SPARE	12
13	PORTABLE RACK	↓	↓	30	1.5			↓	30	↓	SPARE	14
	TOTALS				5.5	4.0	3.0					

REV	BY	DATE		C.I. NO.	APPROVED
△1	JM	3-19-65	REVISED PANEL 'PG' SCHEDULE	16072-6	

NATIONAL AERONAUTICS AND SPACE ADMINISTRATION — M S F C, HUNTSVILLE, ALABAMA

SANDERS & THOMAS INC. POTTSTOWN PA.-WASH. D.C.-MONT., ALA.

EXTENSION OF LOAD TEST ANNEX (BUILDING NO. 4619)

LIGHTING AND POWER CIRCUIT SCHEDULES

NASA AE CONT. NO. NAS 8-12014

FILE NO. M.S.F.C. 9035

SUBMITTED: W. A. Sanders, P.C. — DATE: 12 MAY 64

APPROVAL RECOMMENDED: R. S. Barrett — LAB — DATE 6/15/64

APPROVED: Robert D. Ramsey, Jr. — CHIEF DESIGN BRANCH — NASA DATE 6-16-64

DESIGNED: WLT — DRAWN: WLT — CHECKED: JSF — SCALE: NONE

APPROVAL RECOMMENDED: Ed. Demerjian — CHIEF ELECTRICAL SECTION — DESIGN DATE 6-16-64 — SPEC. NO. F & D 433

APPROVED FOR SAFETY — [signature] 15 June 64 — DATE — CEN. ENGR. SAFETY OFFICE

E14

DRWG. NO. F&D-C-4619-E14

4619

THIS DRAWING AND SPECIFICATION, EACH DELIVERED TO ANY PROPOSER FOR SUCH WORK, ARE THE PROPERTY OF SANDERS & THOMAS, INC. AND ARE NOT TO BE USED IN ANY WAY DETRIMENTAL TO SANDERS & THOMAS, INC. INTERESTS IN THE PREMISES. THEY ARE NOT TO BE USED ON ANY OTHER WORK, AND ARE NOT TO BE LOANED, COPIED OR SHOWN TO ANY OTHER PERSON OR FIRM WITHOUT THE WRITTEN PERMISSION OF SANDERS & THOMAS, INC. THEY ARE TO BE RETURNED UPON REQUEST OR UPON COMPLETION OF THE WORK FOR WHICH THEY WERE PREPARED.

LIGHTING PANEL "LA" CIRCUIT SCHEDULE
277/480 V-3ø-4W-100A MAINS

CKT	FOR	VOLT	BREAKER POLE	BREAKER AMP	KVA LOAD øA	KVA LOAD øB	KVA LOAD øC	BREAKER POLE	BREAKER AMP	VOLT	FOR	CKT
1	LTG-110	277	1	20	5.6			1	20	277	LTG-112	2
3	LTG-110					4.0					LTG-113	4
5	SPARE						5.9				LTG-107,108,109&110	6
7	LTG-104,105 & 106				4.8						LTG-103	8
9	LTG-102					5.1					LTG-103	10
11	LTG-102						4.5				LTG-101	12
13	LTG-102				5.3						LTG-101	14
15	SPARE					—					SPARE	16
17	SPARE	↓	↓	↓			—	↓	↓	↓	SPARE	18
	TOTALS				15.7	9.1	10.4					

LIGHTING PANEL "LF" CIRCUIT SCHEDULE
277/480 V-3ø-4W-100A MAINS

CKT	FOR	VOLT	BREAKER POLE	BREAKER AMP	KVA LOAD øA	KVA LOAD øB	KVA LOAD øC	BREAKER POLE	BREAKER AMP	VOLT	FOR	CKT
1	SPARE	277	1	20	3.8			1	20	277	LTG-02 & 05	2
3	LTG-05					3.2					LTG-05	4
5	LTG-03						3.5				LTG-04	6
7	LTG-04				3.0						SPARE	8
9	SPARE	↓	↓	↓		—		↓	↓	↓	SPARE	10
	TOTALS				6.8	3.2	3.5					

TYPICAL "RP" PANEL CIRCUIT SCHEDULE
REGULATED 120/208V-3ø-4W-100A MAINS

CKT	FOR	VOLT	BREAKER POLE	BREAKER AMP	KVA LOAD øA	KVA LOAD øB	KVA LOAD øC	BREAKER POLE	BREAKER AMP	VOLT	FOR	CKT
1	FUTURE TEST BENCH	120	1	20				1	20	120	FUTURE TEST BENCH	2
3												4
5												6
7												8
9												10
11	↓	↓	↓	↓				↓	↓	↓	↓	12

TYPICAL "TP" PANEL CIRCUIT SCHEDULE
120/208V-3ø-4W-100A MAINS

CKT	FOR	VOLT	BREAKER POLE	BREAKER AMP	KVA LOAD øA	KVA LOAD øB	KVA LOAD øC	BREAKER POLE	BREAKER AMP	VOLT	FOR	CKT
1	FUTURE TEST BENCH	120	1	20				1	20	120	FUTURE TEST BENCH	2
3												4
5												6
7												8
9												10
11	↓	↓	↓	↓				↓	↓	↓	↓	12

LIGHTING PANEL "LB" CIRCUIT SCHEDULE
277/480V-3ø-4W-100A MAINS

CKT	FOR	VOLT	BREAKER POLE	BREAKER AMP	KVA LOAD øA	KVA LOAD øB	KVA LOAD øC	BREAKER POLE	BREAKER AMP	VOLT	FOR	CKT
1	LTG-100	480	2	20	6.6	6.6		2	20	480	LTG-100	2
3					6.6		6.6					4
5						6.6	6.6					6
7					6.6	6.6						8
9					3.3		3.3				SPARE	10
11						3.3	3.3					12
13	SPARE	↓	↓	↓	—	—	—	↓	↓	↓	↓	14
	TOTALS				23.1	23.1	19.8					

POWER PANEL "PPB" CIRCUIT SCHEDULE
480V-3ø-3W-225A MAINS

CKT	FOR	VOLT	BREAKER POLE	BREAKER AMP	KVA LOAD øA	KVA LOAD øB	KVA LOAD øC	BREAKER POLE	BREAKER AMP	VOLT	FOR	CKT
1	AC-2,3,4 & HV-1	480	3	20	4.2	4.2	4.2	3	20	480	AC-5,6 & HV-4	2
3	HV-2,3,6			20	2.2	2.2	2.2		30		(3) ½ HP DAMPER MOTOR	4
5	TEST MACHINE			30	4.3	4.3	4.3		30		TEST MACHINE	6
7	TEST MACHINE			30	2.0	2.0	2.0		15		SPARE	8
9	SPARE			20	—	—	—		20		SPARE	10
11	(2)-3 HP DOOR			30	3.0	3.0	3.0		20		(4) ½ HP & (1) 1HP DOOR	12
13	SPARE	↓	↓	20	—	—	—	↓	15	↓	SPARE	14
	TOTALS				15.7	15.7	15.7					

TYPICAL "DC" PANEL CIRCUIT SCHEDULE
50V DC-1ø-2W-100A MAINS

CKT	FOR	VOLT	BREAKER POLE	BREAKER AMP	KVA LOAD BUS 1	KVA LOAD BUS 2	BREAKER POLE	BREAKER AMP	VOLT	FOR	CKT
1	FUTURE TEST BENCH	50	2	20			2	20	50	FUTURE TEST BENCH	2
3											4
5											6
7											8
9											10
11	↓	↓	↓	↓			↓	↓	↓	↓	12

LIGHTING PANEL "LC" CIRCUIT SCHEDULE
277/480V-3ø-4W-100A MAINS

CKT	FOR	VOLT	BREAKER POLE	BREAKER AMP	KVA LOAD øA	KVA LOAD øB	KVA LOAD øC	BREAKER POLE	BREAKER AMP	VOLT	FOR	CKT
1	LTG-122	277	1	20	5.2			1	20	277	LTG-114&118	2
3	LTG-117					3.6					LTG-115&116	4
5	LTG-119,120&121						1.7				LTG-124&137	6
7	LTG-132				5.4						LTG-125,126	8
9	LTG-133,134					4.8					LTG-129	10
11	LTG-131						2.2				LTG-127,128,130	12
13	SPARE				—						SPARE	14
15	↓					—					↓	16
17	↓	↓	↓	↓			—	↓	↓	↓	↓	18
	TOTALS				10.6	8.4	3.9					

POWER PANEL "PK" CIRCUIT SCHEDULE
120/208V-3ø-4W-100A MAINS

CKT	FOR	VOLT	BREAKER POLE	BREAKER AMP	KVA LOAD øA	KVA LOAD øB	KVA LOAD øC	BREAKER POLE	BREAKER AMP	VOLT	FOR	CKT
1	LTG-01	120	1	20	2.1			1	20	120	RECP	2
3	LTG-01					1.5					LTG & RECP-01 △1	4
5	RECP-02						1.25				EMER LTG UNITS (5)	6
7	RECP-02				1.5						RECP-01&05	8
9	EF-1					1.6					½ HP COMPRESSOR	10
11	LTG. TEST PIT △1						1.4				SPARE	12
13	SPARE										SPARE	14
15	SPARE	↓	↓	↓				↓	↓	↓	SPARE	16
17	SPACE										SPACE	18
19												20
21	↓										↓	22
23												24
	TOTALS				3.6	3.1	2.7	△1				

LIGHTING PANEL "LD" CIRCUIT SCHEDULE
277/480V-3ø-4W-100A MAINS

CKT	FOR	VOLT	BREAKER POLE	BREAKER AMP	KVA LOAD øA	KVA LOAD øB	KVA LOAD øC	BREAKER POLE	BREAKER AMP	VOLT	FOR	CKT
1	LTG-212&214	277	1	20	6.4			1	20	277	LTG-216,217,219,222,223	2
3	LTG-208					5.6					LTG-215,218,220,224	4
5	LTG-205						2.0				SPARE	6
7	LTG-200&202				1.6						SPARE	8
9	LTG-201&203					4.4					LTG-213	10
11	LTG-204&206						3.8				LTG-221	12
13	LTG-207,209&210				.5						SPARE	14
15	SPARE					—						16
17	↓	↓	↓	↓			—	↓	↓	↓		18
	TOTALS				8.5	10.0	5.8					

POWER PANEL "PPA" CIRCUIT SCHEDULE
480V-3ø-3W-225A MAINS

CKT	FOR	VOLT	BREAKER POLE	BREAKER AMP	KVA LOAD øA	KVA LOAD øB	KVA LOAD øC	BREAKER POLE	BREAKER AMP	VOLT	FOR	CKT
1	10HP HYD LIFT PUMP	480	3	30	5.0	5.0	5.0	3	30	480	5HP AC-7	2
3	½HP SUMP PUMP			20	1.0	1.0	1.0				(2) 2HP DUPLEX PUMP	4
5	1HP EF-4				1.4	1.4	1.4				3HP AIR COMPRESSOR	6
7	(2) ½ HP. DOOR				—	—	—					8
9	SUMP PUMP TEST MACHINE - 1/2 H.P.				—	—	—				SPARE	10
11	SPARE				—	—	—					12
13	↓	↓	↓	↓	—	—	—	↓	↓	↓	↓	14
	TOTALS				7.4	7.4	7.4					

AS BUILT

△1 JM 7-13-64 REVISE CIRC. PK-6 & 11 — CT. NO. 370 — APPROVED — B — E

NATIONAL AERONAUTICS AND SPACE ADMINISTRATION — M S F C — HUNTSVILLE, ALABAMA

SANDERS & THOMAS INC. POTTSTOWN PA. WASH. D.C. MONT. ALA.

EXTENSION OF LOAD TEST ANNEX (BUILDING NO. 4619)

LIGHTING AND POWER PANEL SCHEDULES

NASA AL CONT. NO. NAS 8-12014 — FILE NO. 9036 M S F C

SUBMITTED W.A. Sanders, P.E. — APPROVAL RECOMMENDED R.A. Garrett — APPROVED E. Robert D. Ramsey, Jr.

AE DATE 12 MAY 64 — LAB DATE 6/15/64 — NASA DATE 6-16-64

DESIGNED WLT — DRAWN WLT — CHECKED JSF — SPEC NO. F&D 133 — DESIGN DATE 6-16-64 — DRWG. NO. F&D-C-4619-E15

APPROVED FOR SAFETY — Lloyd A. Mayo — GSFC FLIGHT SAFETY OFFICE — 15 June 64 DATE

SHT NO. E15

4619

MSFC MASTER BID DISK 11-18-2013

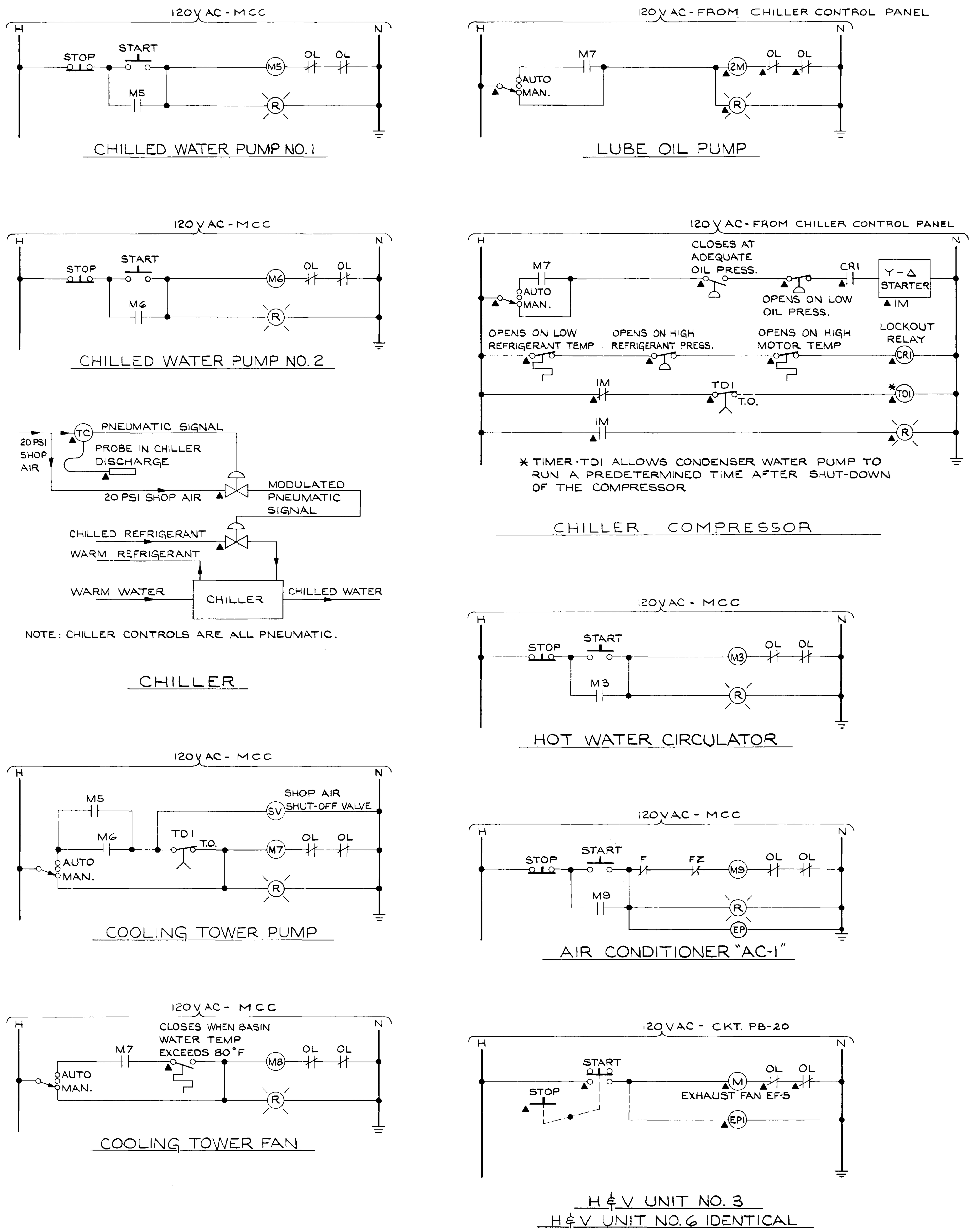

MOTOR CONTROL CENTER "MCC" CONTROL ACCESSORIES

CKT NO.	NAMEPLATE	START STOP PB	MAN. OFF AUTO SEL SW	PILOT LIGHT	EXTRA AUX CONTACT	CONT TRANSF
2	BRIDGE CRANES			X		
3	HOT WATER CIRCULATOR	X		X	1 N.O.	X
4	SPARE	X		X	1 N.O.	X
5	CHILLED WATER PUMP NO. 1	X		X	2 N.O.	X
6	CHILLED WATER PUMP NO. 2	X		X	2 N.O.	X
7	COOLING TOWER PUMP		X	X	3 N.O.	X
8	COOLING TOWER FAN		X	X	3 N.O.	X
9	AIR CONDITIONER AC-1	X		X	1 N.O.	X
10	HEATING WATER PUMP NO. 1	X		X	1 N.O.	X
11	HEATING WATER PUMP NO. 2	X		X	1 N.O.	X
12	EXHAUST FAN	X		X	1 N.O.	X
13	SPARE	X		X	1 N.O.	X
14	AIR HANDLING UNITS - NORTH			X		
15	DUPLEX CONDENSATE PUMPS			X		
16	TRANSFORMER FEEDER			X		
—	15 KVA TRANSFORMER					
—	PANEL "PK"					
—	FUTURE SPACES	4 REQUIRED				

LEGEND

NORMALLY OPEN CONTACT
NORMALLY CLOSED CONTACT
(M1) RELAY COIL
(R) RED INDICATING LIGHT
START PUSHBUTTON
STOP PUSHBUTTON
SELECTOR SWITCH
TEMPERATURE SWITCH
PRESSURE SWITCH
(TDI) TIME DELAY RELAY COIL
TIME DELAY RELAY CONTACT
(TC) TEMPERATURE CONTROLLER
VALVE
(M) MOTOR
(EPI) ELECTRIC PNEUMATIC RELAY COIL
EPI DIVERTING VALVE
▲ EQUIPMENT OR DEVICES FURNISHED BY MECHANICAL SUPPLIER. INSTALLATION AND WIRING TO THESE DEVICES IS AS INDICATED ON DRAWINGS AND IN ELECTRICAL WORK. INTERIOR SECTION OF THE SPECIFICATIONS.
F FIRESTAT
FZ FREEZSTAT

NOTES:

1. DIAGRAMS SHOWN ARE TYPICAL. CONTRACTOR SHALL MAKE NECESSARY CONNECTIONS TO SUIT EQUIPMENT FURNISHED.

AS BUILT

APPROVED FOR SAFETY
GEN. ENGR. SAFETY OFFICE — 15 June 64 — DATE

E16

NATIONAL AERONAUTICS AND SPACE ADMINISTRATION — M S F C HUNTSVILLE ALABAMA

SANDERS & THOMAS INC. POTTSTOWN PA. WASH. D.C. MONT. ALA.

EXTENSION OF LOAD TEST ANNEX (BUILDING NO. 4619)

CONTROL SYSTEMS

NASA AE CONT NO NAS 8-12014

DATE 12 MAY 64 — 6/15/64 — 6-16-64

WJW
WLT
JSP

ELECTRICAL 6-16-64

SPEC. NO. F & D 433

DRWG. NO. F&D-C-4619-E16

4619

MSFC MASTER BID DISK 11-18-2013

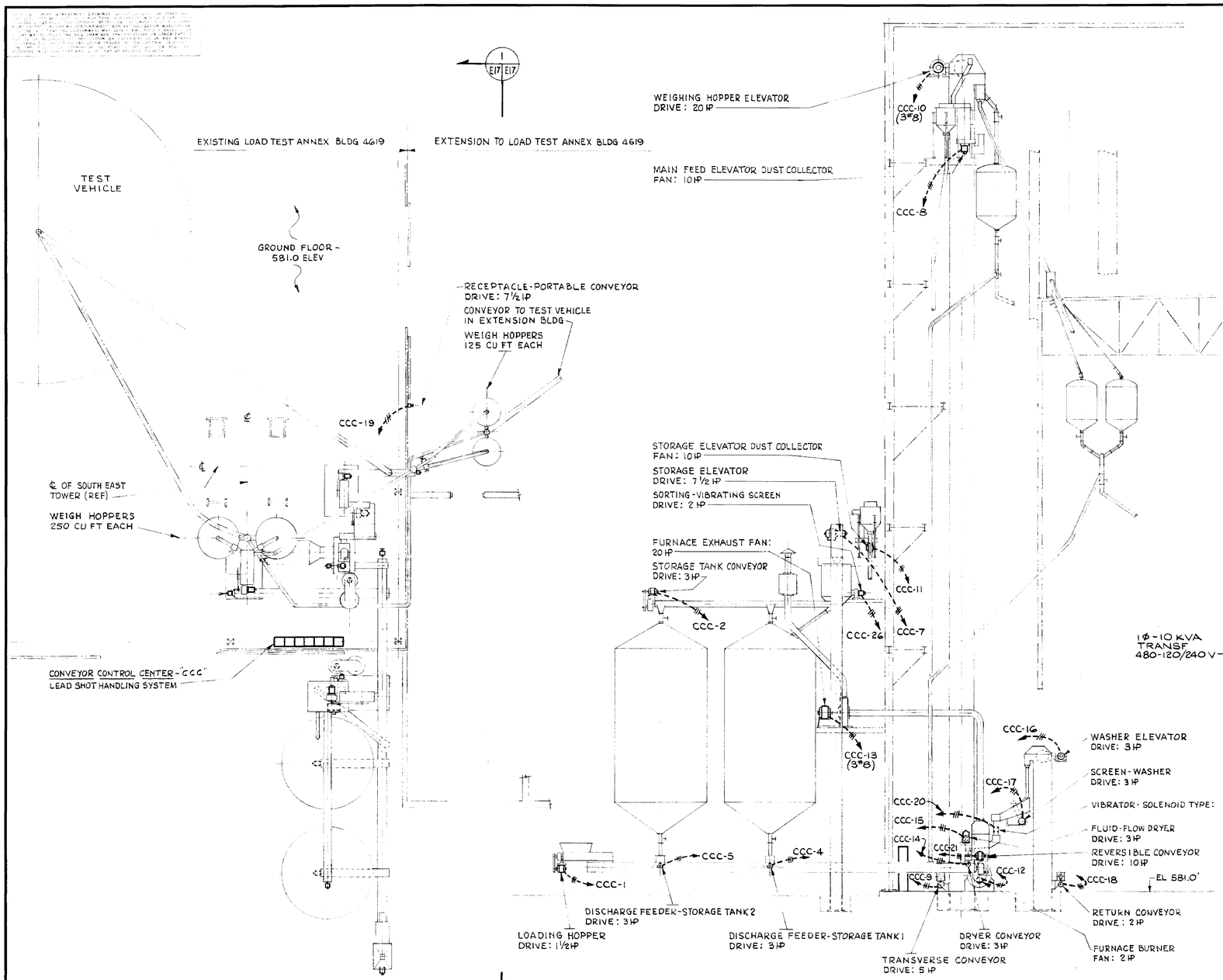

PLAN

SCALE: ⅛" = 1'-0"

SECTION

SCALE: ⅛" = 1'-0"

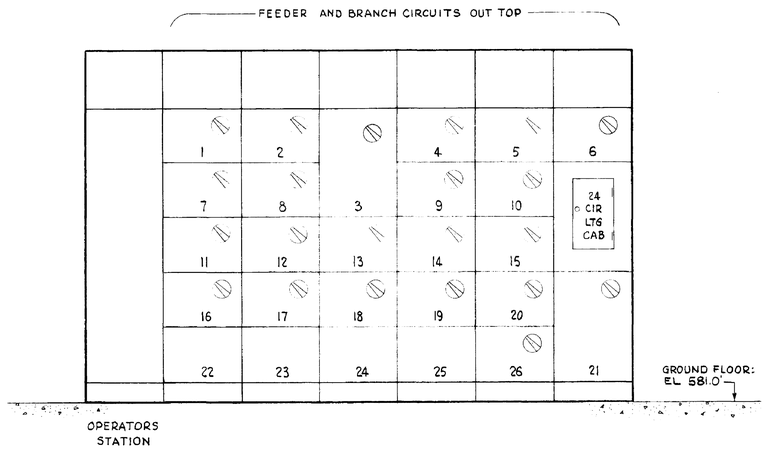

FRONT VIEW

CONVEYOR CONTROL CENTER - CCC"

SCALE: ¾" = 1'-0"

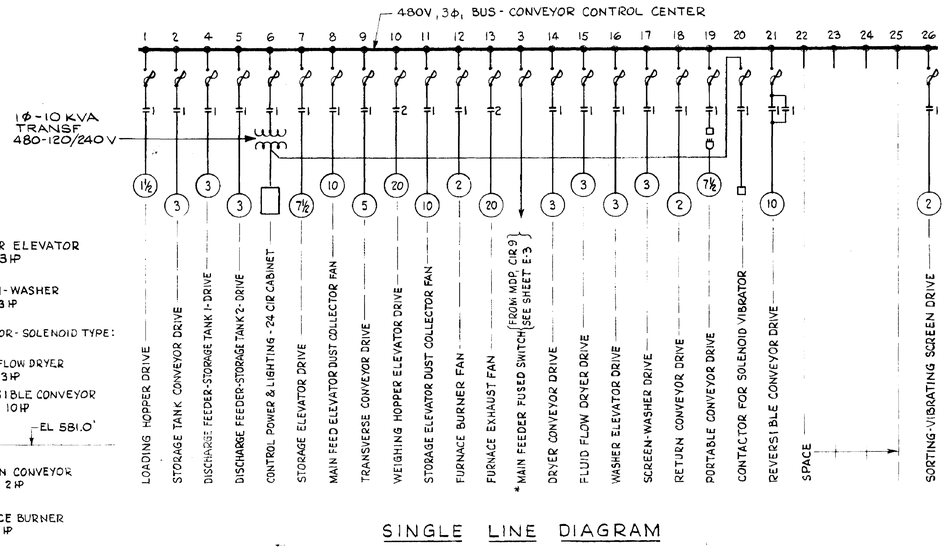

SINGLE LINE DIAGRAM

* PULL 3#½ RHW WITH OUTER NEOPRENE JACKET IN EXISTING 2" CONDUIT & CONNECT CONDUCTORS TO CIRCUIT # 9 AT MDP.

NOTES:

THIS DRAWING SHOWS RELATIVE POSITION OF ELECTRIC DRIVES AND MOTORS FOR THE LEAD SHOT HANDLING SYSTEM:

1. ALL WIRING SHALL BE RUN IN RIGID STEEL CONDUIT WITH SEPARATE CONDUIT SYSTEMS FOR POWER AND CONTROL WIRING.
2. ALL WIRE SHALL BE NO. 12 AND ALL CONDUIT ¾" UNLESS OTHERWISE NOTED.
3. GREEN EQUIPMENT GROUND WIRE SHALL BE RUN WITH ALL POWER CIRCUITS.
5. ALL MOTORS, DRIVES AND CONTROL SENSING DEVICES SHALL HAVE A PLASTIC COVERED FLEXIBLE CONDUIT (12" LONG, MINIMUM) AS FINAL CONNECTION TO DRIVE OR DEVICE.

REFERENCE:

LEAD SHOT HANDLING SYSTEM PLAN ——— L-1

NATIONAL AERONAUTICS AND SPACE ADMINISTRATION — M S F C HUNTSVILLE, ALABAMA

SANDERS & THOMAS INC. POTTSTOWN PA — WASH. D.C. - MONT., ALA.

EXTENSION OF LOAD TEST ANNEX BUILDING NO 4619)

LEAD SHOT HANDLING SYSTEM
POWER DISTRIBUTION

NASA-MSFC CONTR. NO. NAS8-12014 — FILE NO. M-S-F-C 9037

SUBMITTED: W.A. Sanders, P.E. — APPROVED: RECOMMENDED: — APPROVED: CHIEF DESIGN BRANCH, NASA — DATE

DATE: 12 MAY 64 — USE ONLY — APPROVED: RECOMMENDED: — DRWG. NO.

DRAWN SW — CHECKED SW — TRACED JSF — CHIEF ELECTRICAL SECTION — DESIGN DATE — F8D-C-4619-E17

E17 — AS NOTED — SPEC NO. F & D-433

4619

MSFC MASTER BID DISK 11-18-2013

START SEQUENCE (LOADING)

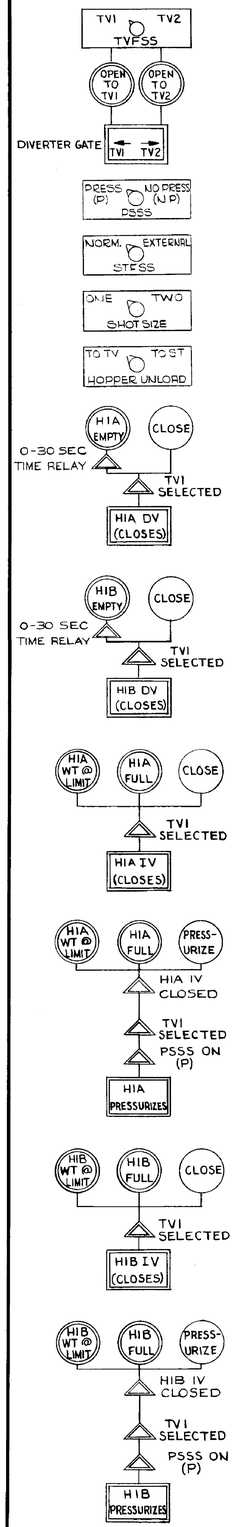

DUPLICATE SYSTEM FOR HOPPER #2

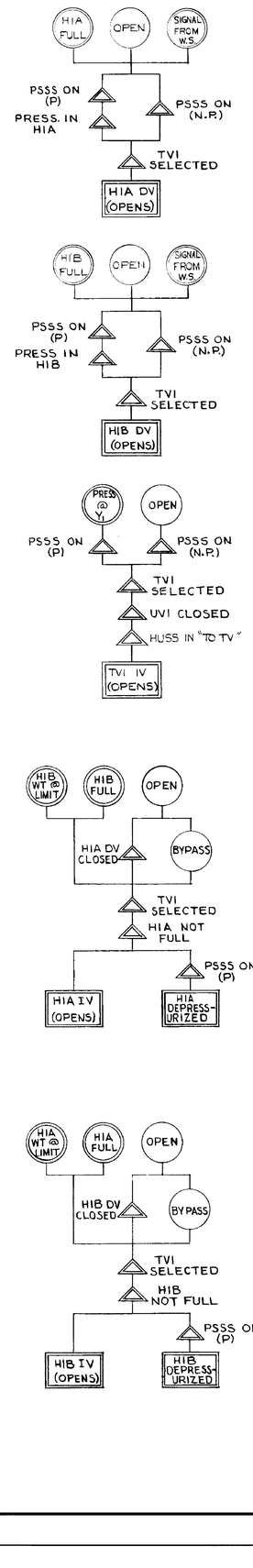

DUPLICATE SYSTEM FOR HOPPER #2

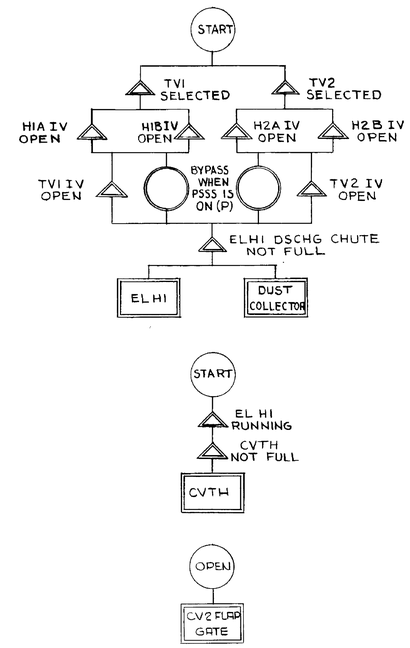

STOP FILLING PROCESS

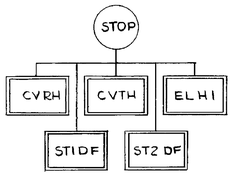

HOPPER UNLOAD (RETURN TO STORAGE TANK)

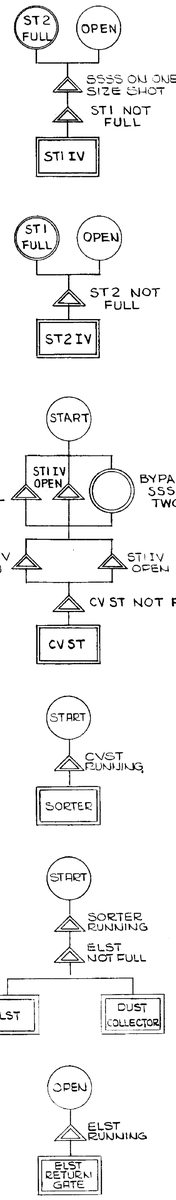

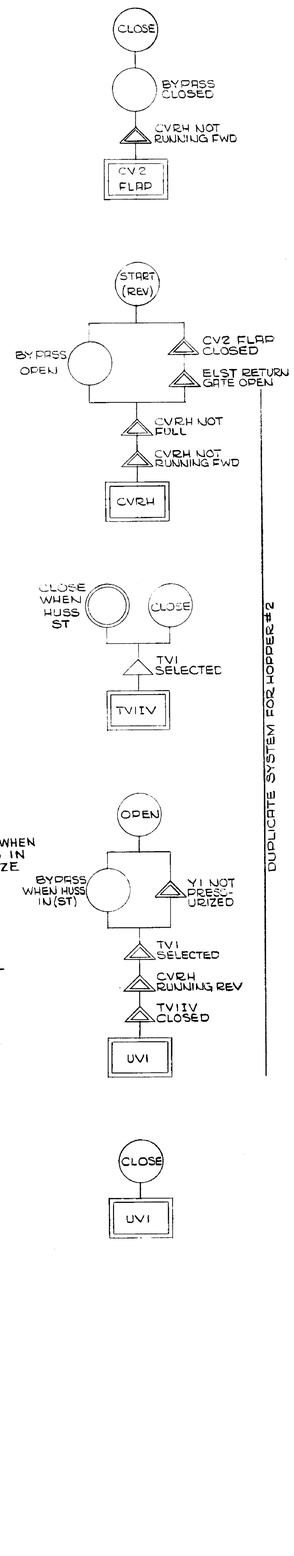

DUPLICATE SYSTEM FOR HOPPER #2

UNLOADING TV

POSITION PORTABLE HORIZONTAL CONVEYOR UNDER TV TO BE EMPTIED

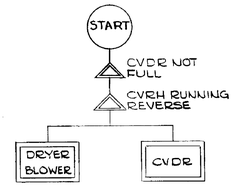

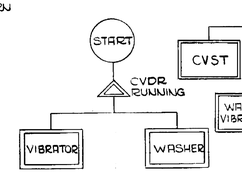

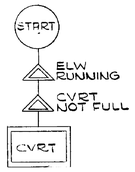

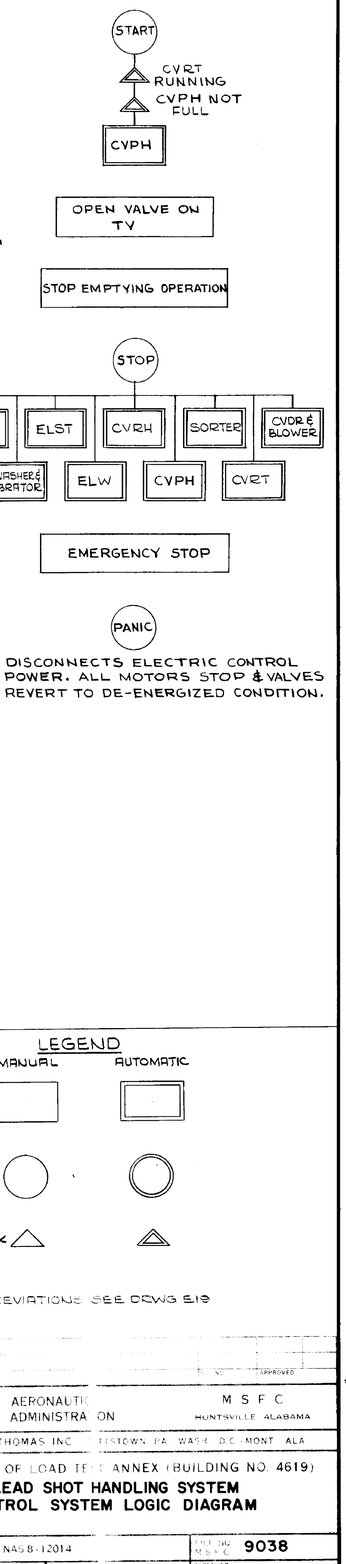

DISCONNECTS ELECTRIC CONTROL POWER. ALL MOTORS STOP & VALVES REVERT TO DE-ENERGIZED CONDITION.

LEGEND

	MANUAL	AUTOMATIC
WORK	□	□
CONTROL	○	○
INTERLOCK	△	△

FOR ABBREVIATIONS SEE DRWG E19

NATIONAL AERONAUTICS AND SPACE ADMINISTRATION — M S F C — HUNTSVILLE ALABAMA

SANDERS & THOMAS INC. — PISTOWN, PA. WASH. D.C. MONT. ALA

EXTENSION OF LOAD TEST ANNEX (BUILDING NO. 4619)

LEAD SHOT HANDLING SYSTEM CONTROL SYSTEM LOGIC DIAGRAM

NASA CONT. NO. NAS8-12014 — SHEET NO. 9038

DESIGN: STANDHARDT — DRAWN: R. BORTNER — TRACED: IAEGER — DATE: 12 MAY 64

APPROVED — CHIEF DES. EA BRANCH — ASSIST. SUPER.

APPROVAL DATE — SPECIFICATION NO. — DESIGN DATE — SPEC. NO. S D-433

DRWG. NO. F&D-C-4619-E18

E18

4619

MSFC MASTER BID DISK 11-18-2013

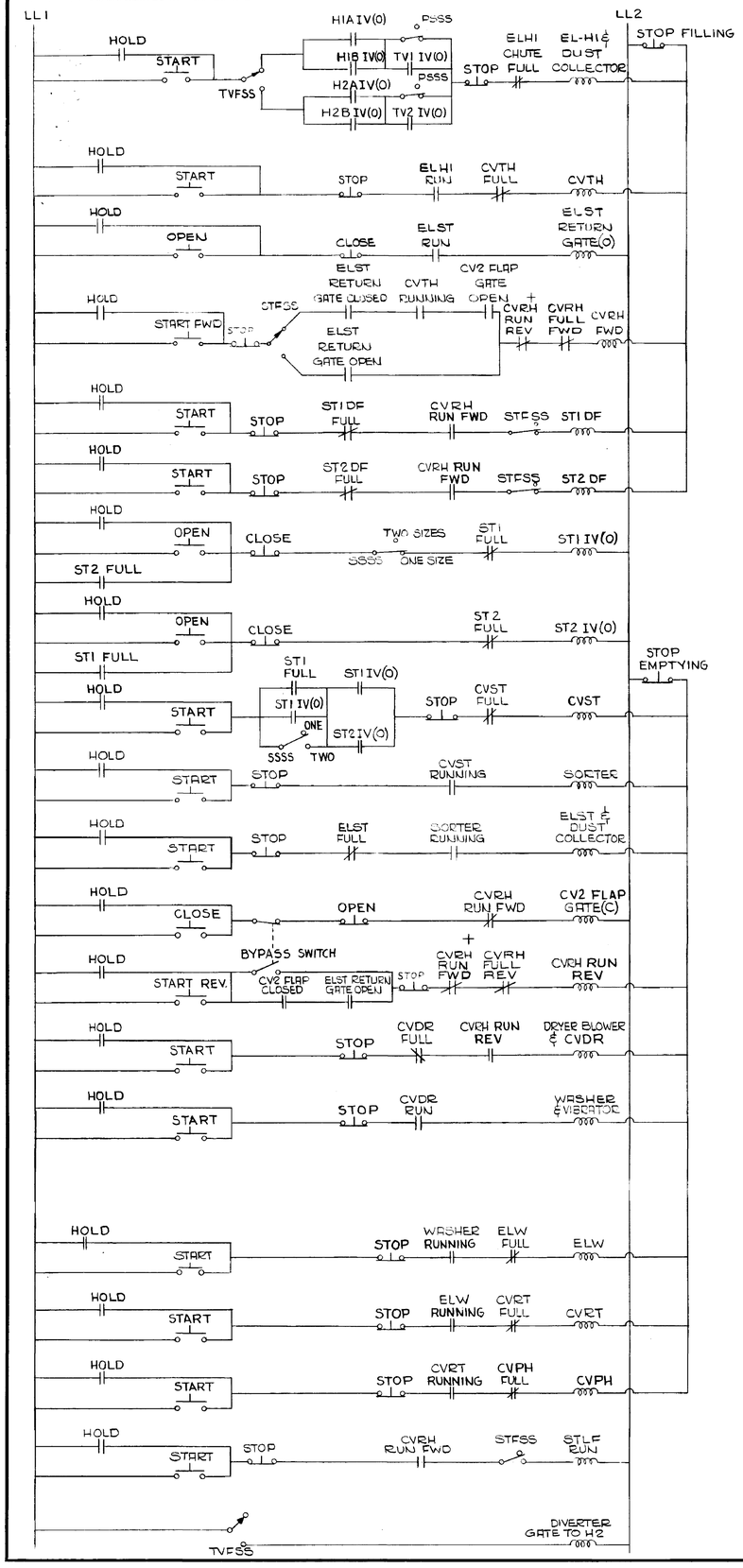

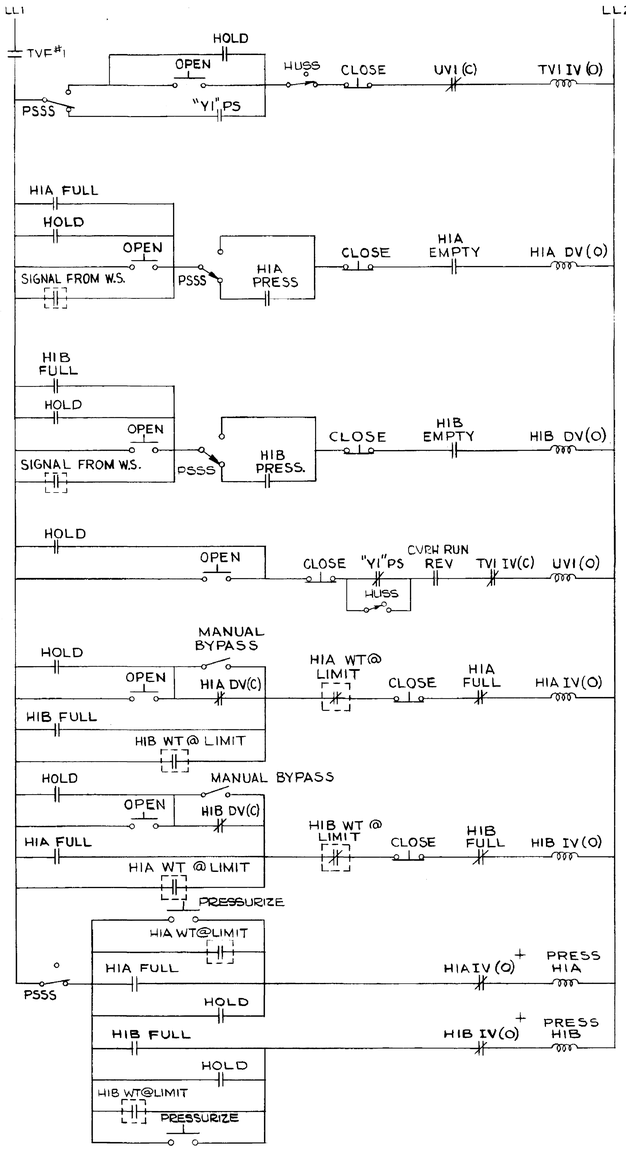

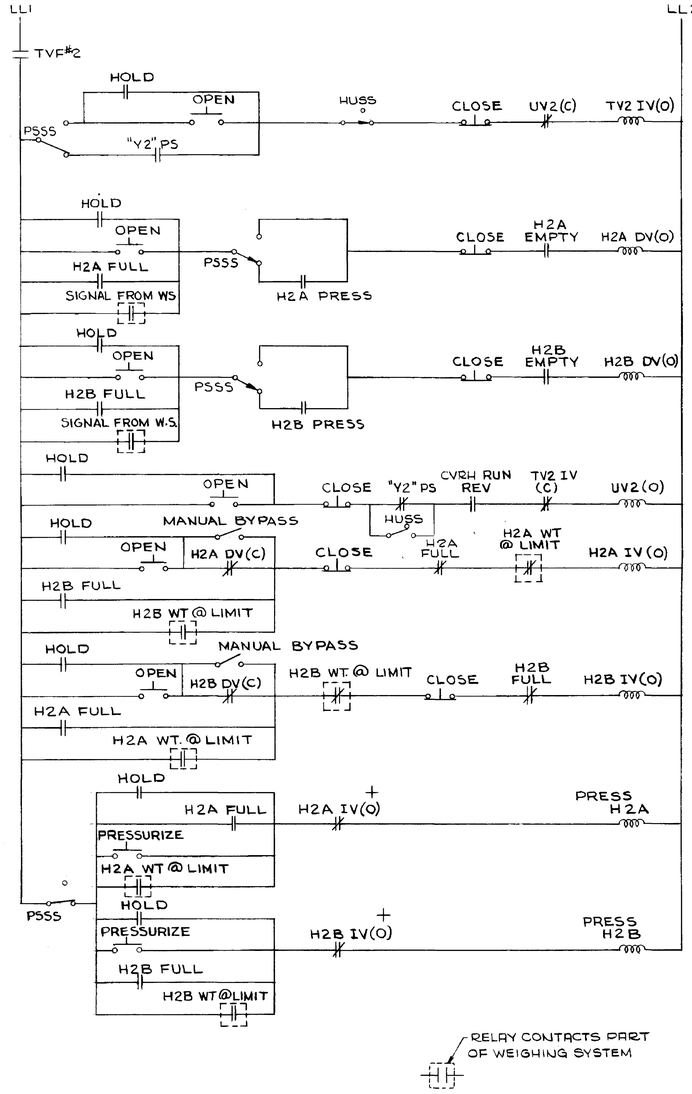

RELAY CONTACTS PART OF WEIGHING SYSTEM

NOTES:

1. CIRCUIT SHOWN DE-ENERGIZED.
2. ALL VALVES ARE NORMALLY CLOSED.
3. SYSTEM IS DEPRESSURIZED.
4. ELST RETURN GATE CLOSED.
5. CV2 FLAP GATE OPEN. (SEE DIAGRAM-CVRH E2)
6. SELECTOR SWITCHES:
   - A. TVFSS ON "TV1"
   - B. PSSS ON "PRESSURIZED"
   - C. SSSS ON "ONE"
   - D. HUSS ON "TO TV"
   - E. STFSS ON "NORMAL"
7. ALL RELAY CONTACTS ARE PART OF SENSOR CONTROLLED RELAYS EXCEPT THOSE MARKED "+" AND THE "HOLD" CONTACTS.

ABBREVIATIONS:

CVDR ---- DRYER CONVEYOR
CVPH ---- PORTABLE HORIZONTAL CONVEYOR
CVRH ---- REVERSIBLE HORIZONTAL CONVEYOR
CVRT ---- RETURN CONVEYOR
CVST ---- STORAGE TANK CONVEYOR
CVTH ---- TRANSVERSE HORIZONTAL CONVEYOR
ELH1 ---- ELEVATOR AT WEIGHING HOPPER BANK #1
ELST ---- STORAGE TANK ELEVATOR
ELW ---- WASHER ELEVATOR
H1R * ---- WEIGHING HOPPER 1R
H1B * ---- WEIGHING HOPPER 1B
H2A * ---- WEIGHING HOPPER 2R
H2B * ---- WEIGHING HOPPER 2B
HUSS ---- HOPPER UNLOADING SELECTOR SWITCH
PSSS ---- PRESSURE SELECTION SELECTOR SWITCH
SSSS ---- SHOT SIZE SELECTOR SWITCH
ST1 * ---- STORAGE TANK #1
ST2 * ---- STORAGE TANK #2
STFSS ---- STORAGE TANK FILL SELECTOR SWITCH
TV1 * ---- TEST VEHICLE #1
TV2 * ---- TEST VEHICLE #2
TVFSS ---- TEST VEHICLE FILL SELECTOR SWITCH
UV * ---- UNLOADING VALVE
Y ---- JUNCTION ON DISCHARGE SIDE OF WEIGHING HOPPER
STLE ---- STORAGE TANK LOAD FEEDER
PS ---- PRESSURE SWITCH

* { IV ---- INTAKE VALVE; DV ---- DISCHARGE VALVE; DF ---- DISCHARGE FEEDER; 1 ---- WEIGHING HOPPER SYSTEM #1; 2 ---- WEIGHING HOPPER SYSTEM #2 }
WS ---- WEIGHING SYSTEM

NATIONAL AERONAUTICS AND SPACE ADMINISTRATION — M S F C — HUNTSVILLE, ALABAMA

SANDERS & THOMAS INC. POTTSTOWN PA. WASH. D.C. MONT. ALA.

EXTENSION OF LEAD TEST ANNEX (BUILDING NO. 4619)

LEAD SHOT HANDLING SYSTEM
CONTROL SYSTEM LADDER DIAGRAM

NASA AE CONT. NO. NAS8-[illegible]014
FILE NO. M S F C 9039
SUBMITTED: W A Sanders P.E.
APPROVAL RECOMMENDED:
APPROVED:
CHIEF DESIGN BRANCH
DATE: 12 MAY 64
APPROVAL RECOMMENDED:
NASA DATE:
DESIGNED BY: STANDHARDT
DRAWN BY: R. BORTNER
CHECKED BY: IAEGER
SEE ELECTRICAL SECTION
DESIGN DATE:
SPEC. NO. F & D 433
DRWG. NO. F&D-C-4619-E19

SHEET NO. E19

4619

MSFC MASTER BID DISK 11-18-2013

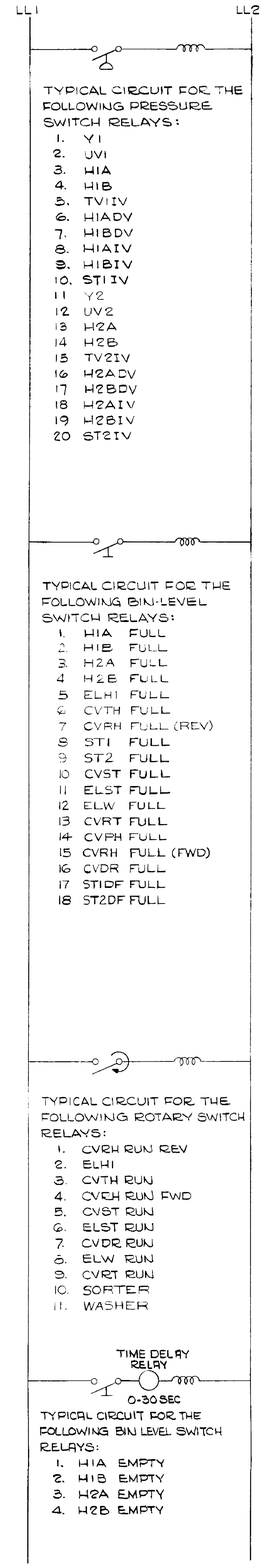

NOTES:

1. LIGHT INDICATORS SHOWN SHALL BE MOUNTED ON THE GRAPHIC CONTROL PANEL
2. FOR ABBREVATIONS SEE DRWG Nº PR-E19.
3. SYSTEM IS SHOWN DE-ENERGIZED.
4. SYSTEM IS RESET BY MOMENTARILY TURNING OFF THE MAIN CONTROL POWER SWITCH.

LEGEND

- BS — BIN SWITCH
- LS — LIMIT SWITCH
- PS — PRESSURE SWITCH
- RS — ROTARY SWITCH
- R — RED INDICATOR LIGHT
- RELAY
- RELAY CONTACTS (N.O.)

NATIONAL AERONAUTICS AND SPACE ADMINISTRATION		M S F C HUNTSVILLE, ALABAMA
SANDERS & THOMAS, INC. POTTSTOWN PA.		WASH. D.C.-MONT., ALA.

EXTENSION OF LOAD TEST ANNEX (BUILDING NO. 4619)

LEAD SHOT HANDLING SYSTEM
CONTROL SYSTEM LADDER DIAGRAM

NASA AE CONT. NO. NAS8-12014 — FILE NO. M S F C 9040

DRAWN: W.A. Sanders, Jr. 12 MAY 64
DESIGNED: STANDHARDT
DETAILED: CIARLETTA
CHECKED: JAEGER
APPROVED: CHIEF ELECTRICAL SECTION
SPEC. NO. F A D-433
DRWG. NO. F&D-C-4619-E20

E20

4619

MSFC MASTER BID DISK 11-18-2013

NOTICE - THIS IS NOT GOVERNMENT DRAWINGS, SPECIFICATIONS, OR OTHER DATA PREPARED OR FURNISHED BY THE GOVERNMENT IN CONNECTION WITH A CONTRACT OR GRANT. AND NEITHER THE GOVERNMENT NOR THE UNITED STATES GUARANTEES THAT THEY ARE SUITABLE FOR USE FOR ANY PURPOSE WHATSOEVER. THE GOVERNMENT DISCLAIMS ALL WARRANTIES WHATSOEVER, EXPRESS OR IMPLIED, WITH RESPECT TO THEM, INCLUDING WARRANTIES OF MERCHANTABILITY AND FITNESS FOR A PARTICULAR PURPOSE. IN NO EVENT SHALL THE GOVERNMENT OR ITS CONTRACTORS BE LIABLE FOR SPECIAL, DIRECT, INDIRECT OR CONSEQUENTIAL DAMAGES ATTRIBUTED TO SUCH DRAWINGS, SPECIFICATIONS OR OTHER DATA. IT IS NOT TO BE ASSUMED BY IMPLICATION OR OTHERWISE AS TO ANY PARTICULAR CONDITION OR USE THEREOF OR THAT THE SAME MAY NOT INFRINGE PRIVATELY OWNED RIGHTS. THE GOVERNMENT ASSUMES NO OBLIGATION OR LIABILITY FOR ANY USE, OR FOR ANY DAMAGES RESULTING FROM USE, OF ANY INFORMATION, APPARATUS, METHOD OR PROCESS DISCLOSED IN THESE DRAWINGS, SPECIFICATIONS OR OTHER DATA. ANY PERSON WHO RELIES UPON OR USES THE SAME FOR ANY PURPOSE WHATSOEVER DOES SO AT HIS OWN RISK AND AGREES TO HOLD THE GOVERNMENT AND ITS CONTRACTORS HARMLESS FROM ANY LIABILITY RESULTING FROM SUCH USE. FURTHER, NOTHING CONTAINED IN THESE DRAWINGS, SPECIFICATIONS OR OTHER DATA SHALL BE CONSTRUED AS GRANTING ANY LICENSE UNDER ANY PATENT OR AS CONFERRING ANY RIGHT TO USE ANY INVENTION DESCRIBED THEREIN.

NOTES:

1. COLOR SCHEME OF LIGHT INDICATORS.
   - A. VALVE OPEN - GREEN
   - B. VALVE CLOSED - RED
   - C. BIN FULL - RED
   - D. BIN EMPTY - YELLOW
   - E. BIN IN BETWEEN - GREEN
   - F. DEVICES RUNNING - GREEN
   - G. DEVICES NOT RUNNING - RED
   - H. COMPONENT PRESSURIZED - GREEN
   - I. COMPONENT DEPRESSURIZED - RED
   - J. GATES AS INDICATED ON DRWG E 20.
2. LIGHT INDICATORS SHALL BE INTEGRATED WITH PANEL. (INDICATORS NOT SHOWN)

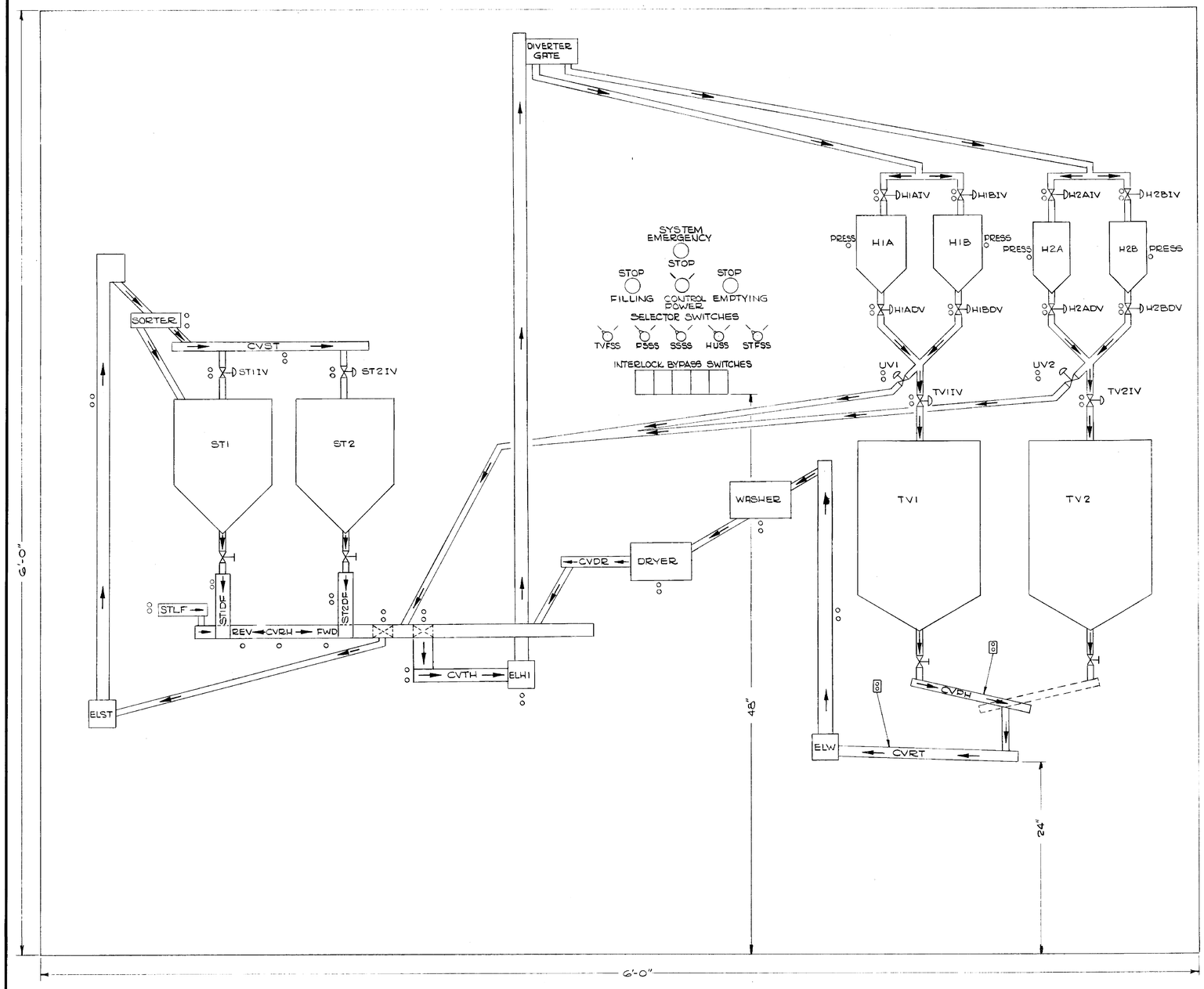

REV BY	DATE	CT NO	APPROVED

NATIONAL AERONAUTICS AND SPACE ADMINISTRATION — M S F C, HUNTSVILLE, ALABAMA

SANDERS & THOMAS INC. POTTSTOWN PA - WASH., D.C. - MONT., ALA.

EXTENSION OF LOAD TEST ANNEX (BUILDING NO. 4619)

LEAD SHOT HANDLING SYSTEM

GRAPHIC PANEL

NASA AE CONT NO. NAS8-2014

SUBMITTED: W.A. Sanders P.E. — DATE: 12 MAY 64

DESIGNED: STANDHARDT
DRAWN: CIARLETTA
CHECKED: EAGLETZ
SCALE: NONE

APPROVAL RECOMMENDED:

DATE:

APPROVAL RECOMMENDED: ELECTRICAL SECTION

DESIGN DATE:

SPEC. NO. F & D-433

FILE NO. M S F C 9041

APPROVED: CHIEF DESIGN BRANCH, NASA DATE:

DRWG. NO. F&B-C-4619-E21

E21

MSFC MASTER BID DISK 11-18-2013

DRAWING INDEX

DWG NO	FILE NO	TITLE
		GENERAL
		TITLE SHEET
F&D-C-4619-GI	8965	DRAWING INDEX
F&D-C-4619-G2	8966	LOCATION MAP
F&D-C-4619-G3	8967	ABBREVIATIONS
		CIVIL
F&D-C-4619-CI	8968	SITE PLAN
F&D-C-4619-C2	8969	PROFILES & DETAILS
F&D-C-4619-C3	8970	LOGS BORINGS
F&D-C-4619-C4	8971	LOGS BORINGS
		ARCHITECTURAL
F&D-C-4619-AI	8972	BASEMENT FLOOR PLAN
F&D-C-4619-A2	8973	FIRST FLOOR PLAN
F&D-C-4619-A3	8974	SECOND FLOOR PLAN & TOILET DETAILS
F&D-C-4619-A4	8975	ROOF PLAN
F&D-C-4619-A5	8976	NORTH ELEVATION
F&D-C-4619-A6	8977	SOUTH ELEVATION
F&D-C-4619-A7	8978	EAST & WEST ELEVATIONS
F&D-C-4619-A8	8979	BUILDING SECTION
F&D-C-4619-A9	8980	SECTIONS & DETAILS
F&D-C-4619-AI0	8981	SECTIONS & DETAILS
F&D-C-4619-AII	8982	ROOM, PAINT & DOOR SCHEDULES
F&D-C-4619-AI2	8983	DOOR DETAILS
F&D-C-4619-AI3	8984	WINDOW DETAILS
F&D-C-4619-AI4	8985	STAIR PLANS, SECTIONS & DETAILS
F&D-C-4619-AI5	8986	REFLECTED CEILING PLANS
F&D-C-4619-AI6	8987	MISCELLANEOUS DETAILS
F&D-C-4619-AI7	9123	MISCELLANEOUS DETAILS
F&D-C-4619-AI8	9124	MISCELLANEOUS DETAILS
F&D-C-4619-AI9	9125	MISCELLANEOUS DETAILS
		STRUCTURAL
F&D-C-4619-SI	8988	FOUNDATION PLAN
F&D-C-4619-S2	8989	FIRST FLOOR PLAN
F&D-C-4619-S3	8990	FOUNDATION & FIRST FLOOR- SECTIONS & DETAILS
F&D-C-4619-S4	8991	FOUNDATION & FIRST FLOOR - SECTIONS & DETAILS
F&D-C-4619-S5	9126	FOUNDATION DETAILS
F&D-C-4619-S6	8992	TEST BED - SECTIONS & DETAILS
F&D-C-4619-S7	8993	SECOND FLOOR PLAN & CROSS SECTION
F&D-C-4619-S8	8994	LOW ROOF & CRANE RUNWAY PLANS
F&D-C-4619-S9	8995	BOTTOM CHORD PLAN
F&D-C-4619-SI0	8996	HIGH ROOF & TOP CHORD PLAN
F&D-C-4619-SII	8997	NORTH ELEVATION
F&D-C-4619-SI2	8998	SOUTH ELEVATION
F&D-C-4619-SI3	8999	EAST ELEVATION
F&D-C-4619-SI4	9000	WEST ELEVATION
F&D-C-4619-SI5	9001	TRUSSES & MISCELLANEOUS DETAILS
F&D-C-4619-SI6	9002	ANECHOIC & REVERBERANT ROOM - PLAN & SECTIONS
F&D-C-4619-SI7	9127	ANECHOIC & REVERBERANT ROOM-DETAILS
F&D-C-4619-SI8	9003	LEAD SHOT STORAGE TANKS - PLAN, SECTIONS & DETAILS
F&D-C-4619-SI9	9128	LEAD SHOT STORAGE SYSTEM-MISCELLANEOUS DETAILS
F&D-C-4619-S20	9130	FOUNDATION FOR 2,000,000 POUND TESTING MACHINE
F&D-C-4619-S21	9131	REVERBERANT ROOM- HORN DOOR, PLAN, SECTIONS & DETAILS

DWG NO	FILE NO	TITLE
		MECHANICAL
		HEATING, VENTILATING & AIR CONDITIONING
F&D-C-4619-MI	9004	BASEMENT FLOOR PLAN
F&D-C-4619-M2	9005	FIRST FLOOR PLAN
F&D-C-4619-M3	9006	SECOND FLOOR & MECHANICAL ROOM PLANS - SECTIONS & DETAILS
F&D-C-4619-M4	9007	SCHEDULES & DETAILS
F&D-C-4619-M5	9008	CONTROL SCHEMATICS & DETAILS
		PLUMBING
F&D-C-4619-PI	9009	BASEMENT FLOOR PLAN
F&D-C-4619-P2	9010	FIRST FLOOR PLAN
F&D-C-4619-P3	9011	TOILETS & RISER DIAGRAMS
		LEAD SHOT HANDLING SYSTEM
F&D-C-4619-LI	9012	PLAN
F&D-C-4619-L2	9013	SECTIONS
F&D-C-4619-L3	9014	ELEVATOR & WEIGH HOPPERS (250 CU. FT.)- INSTALLATION
F&D-C-4619-L4	9015	WEIGH HOPPERS (250 CU. FT.) - DETAILS
F&D-C-4619-L5	9016	WEIGH HOPPERS (250 CU. FT.) - DETAILS
F&D-C-4619-L6	9017	WEIGH HOPPERS (125 CU. FT.)- INSTALLATION
F&D-C-4619-L7	9018	WEIGH HOPPERS (125 CU. FT.) - DETAILS
F&D-C-4619-L8	9019	WASHER & DRYER - INSTALLATION
F&D-C-4619-L9	9020	STORAGE TANKS - INSTALLATION
F&D-C-4619-LI0	9021	SCHEMATIC - AIR CONTROLS
		ELECTRICAL
F&D-C-4619-EI	9022	SUBSTATION PLAN
F&D-C-4619-E2	9023	LEGEND & SCHEDULES
F&D-C-4619-E3	9024	SINGLE LINE DIAGRAM
		LIGHTING
F&D-C-4619-E4	9025	BASEMENT FLOOR PLAN
F&D-C-4619-E5	9026	FIRST FLOOR PLAN
F&D-C-4619-E6	9027	SECOND FLOOR PLAN
		POWER
F&D-C-4619-E7	9028	BASEMENT FLOOR PLAN
F&D-C-4619-E8	9029	FIRST FLOOR PLAN
		GROUNDING
F&D-C-4619-E9	9030	BASEMENT FLOOR PLAN
F&D-C-4619-EI0	9031	FIRST FLOOR & ROOF PLAN
		COMMUNICATIONS
F&D-C-4619-EII	9032	BASEMENT FLOOR PLAN
F&D-C-4619-EI2	9033	FIRST FLOOR PLAN
F&D-C-4619-EI3	9034	SECOND FLOOR PLAN
		LIGHTING & POWER
F&D-C-4619-EI4	9035	CIRCUIT SCHEDULES
F&D-C-4619-EI5	9036	CIRCUIT SCHEDULES
F&D-C-4619-EI6	9129	CONTROL SYSTEMS
		LEAD SHOT HANDLING SYSTEM
F&D-C-4619-EI7	9037	POWER DISTRIBUTION
F&D-C-4619-EI8	9038	CONTROL SYSTEM LOGIC DIAGRAM
F&D-C-4619-EI9	9039	CONTROL SYSTEM LADDER DIAGRAM
F&D-C-4619-E20	9040	CONTROL SYSTEM LADDER DIAGRAM
F&D-C-4619-E21	9041	GRAPHIC PANEL

DWG NO	TITLE
	STANDARD DRAWING
MSFC-STD-900	PROTECTION FENCE & DETAILS - TYPE-FE - 5,6,7
MSFC-STD-901	WATER DISTRIBUTION, GAS DISTRIBUTION & SANITARY SEWERS
MSFC-STD-912	MISCELLANEOUS DRAINAGE & PAVING DETAILS
MSFC-STD-905	ELECTRICAL & COMMUNICATIONS MANHOLES COVERS, & ACCESSORIES

NATIONAL AERONAUTICS AND SPACE ADMINISTRATION — M S F C — HUNTSVILLE, ALABAMA

SANDERS & THOMAS, INC. POTTSTOWN, PA. WASH., D.C. MONT. ALA.

EXTENSION OF LOAD TEST ANNEX (BUILDING NO. 4619)

DRAWING INDEX

NASA AE CONT. NO. NAS8-12014		FILE NO. 8965
W.B. Sanders P.E.	A.L. Barrett	Robert D. Clamp, Jr.
12 MAY 64	6/15/64	6-10-64
TC, MLM		DRWG. NO. F&D-C-4619-GI

GI

4619

MSFC MASTER BID DISK 11-18-2013

NOTICE - THESE ENGINEERING DRAWINGS, SPECIFICATIONS, OR OTHER DATA [illegible]

NEAL ROAD

RIDEOUT ROAD

MARTIN ROAD

MARTIN ROAD

EXTENSION OF LOAD TEST ANNEX (BUILDING NO. 4619)

DODD ROAD

N

0 2 4 6 8 10 12

HUNDREDS OF FEET

MARTIN ROAD

WASTE AREA FOR DEBRIS

DODD ROAD

PATTON ROAD

0 1 2

MILES

N

INSERT

MARSHALL SPACE FLIGHT CENTER - HUNTSVILLE, ALABAMA

LOCATION MAP

REV	BY	DATE	CT NO	APPROVED

NATIONAL AERONAUTICS AND SPACE ADMINISTRATION — M S F C, HUNTSVILLE ALABAMA

SANDERS & THOMAS INC. POTTSTOWN PA.- WASH., DC.- MONT. ALA.

EXTENSION OF LOAD TEST ANNEX (BUILDING NO. 4619)

LOCATION MAP

NASA AE CONT. NO. NAS 8-12014 — FILE NO. MSFC 8966

SUBMITTED: [illegible] P.E.

RECOMMENDED: AE DATE 12 MAY 64

APPROVAL RECOMMENDED: R.S. Harrett, LAB DATE 6/15/64

APPROVED: [illegible], CHIEF, DESIGN BRANCH, MASA DATE 6-16-64

DESIGNED

DRAWN R.H.

CHECKED M.M.

SCALE AS NOTED

APPROVAL RECOMMENDED: [illegible], CHIEF, DESIGN SECTION, DESIGN DATE June 5, 1964

SPEC. NO. F&D-433

DRWG. NO. F&D-C-4619-G2

G-2

MSFC FORM 232 (REV. DEC. 1960)

4619

MSFC MASTER BID DISK 11-18-2013

ABBREVIATIONS

AB	ANCHOR BOLT
ABT	ABOUT
AC	AIR CONDITIONING
ACT	ACOUSTICAL
AD	AREA DRAIN
AMP	AMPERE
ASB	ASBESTOS
AT	ACOUSTICAL TILE
AUX	AUXILIARY
APPROX	APPROXIMATELY
AGG	AGGREGATE
BD	BOARD
BKR	BREAKER
BLDG	BUILDING
BOTT	BOTTOM
BS	BOTH SIDES
BRG	BEARING
BSMT	BASEMENT
BTU	BRITISH THERMAL UNIT
BB	BOND BEAM
BP	BEARING PLATE
C	CONDENSER WATER SUPPLY
CAP	CAPICITY
CB	CONCRETE BLOCK
C.C.	CENTER TO CENTER
CEM	CEMENT
CER. T	CERAMIC TILE
CFM	CUBIC FEET PER MINUTE
CH	CHILLED WATER SUPPLY
CHR	CHILLED WATER RETURN
CHK	CHECKERED
C.J.	CONTROL JOINT
CKT	CIRCUIT
CL	CLEAR
CLG	CEILING
CND	CONDUIT
CO	CLEAN OUT
COL	COLUMN
CONC	CONCRETE
CONT	CONTINUOUS
CORR	CORRUGATED
COV	COVER
CTR	CENTER
CU	CUBIC
CW	COLD WATER
CR	CONDENSER WATER RETURN
C.B.	CATCH BASIN
C.M.	CORRUGATED METAL
CONN	CONNECTION
CJD	CONSTRUCTION JOINT DOWELED
CONV	CONVECTOR

DB	DRY BULB
DC	DIRECT CURRENT
DF	DRINKING FOUNTAIN
DH	DUCT HEATER
DIA	DIAMETER
DIM	DIMENSION
DISCH	DISCHARGE
DIST	DISTRIBUTION
DN	DOWN
DS	DOWN SPOUT
DWG	DRAWING
DF	DRINKING FOUNTAIN
EA	EACH
EJ	EXPANSION JOINT
EL	ELEVATION
ELEC	ELECTRIC
EMERG	EMERGENCY
ENT	ENTER
EQ	EQUAL
EQUIP	EQUIPMENT
EW	EACH WAY
EXH	EXHAUST
EXIST	EXISTING
EXP	EXPANSION
EF	EACH FACE
EJD	EXPANSION JOINT DOWELED
FCO	FLOOR CLEAROUT
FD	FLOOR DRAIN
F.H.	FIRE HYDRANT
FIN	FINISH
FL	FLOOR
F&T	FLOAT AND THERMOSTAT
FT	FEET
FTG	FOOTING
FU	FUSE
FWD	FORWARD
GA	GAGE
GAL	GALLON
G.B.	GRADE BEAM
GFE	GOVERNMENT FURNISHED EQUIPMENT
GOV	GOVERNMENT
GPM	GALLONS PER MINUTE
GRD	GROUND
GUSS	GUSSET
GYP	GYPSUM
GR	GRADE
GRTG	GRATING
GALV	GALVANIZED

HARD	HARDENER
HD	HEAD
H.M.	HALLOW METAL
HP	HORSEPOWER
HR	HOUR
HT	HEIGHT
HTR	HEATER
H&V	HEATING AND VENTILATING
HWR	HEATING WATER RETURN
HWS	HEATING WATER SUPPLY
HDWL	HEADWALL
HORIZ	HORIZONTAL
INS	INSULATION
INTLK	INTERLOCK
INV	INVERT
IW	INDUSTRIAL WATER
JT	JOINT
KC	KEENES CEMENT
LB	POUND
LH	LEFT HAND
LHR	LEFT HAND REVERSED
LOC	LOCATE
LP	LOW PRESSURE STEAM SUPPLY
LPR	LOW PRESSURE CONDENSATE RETURN
LTG	LIGHTING
LTS	LIGHTS
LVG	LEAVING
MACH	MACHINERY
MATL	MATERIAL
MAX	MAXIMUM
MBH	THOUSAND BTU PER HOUR
MECH	MECHANICAL
MH	MAN HOLE

MET	METAL
MH	MANHOLE
MIN	MINIMUM
MO	MASONRY OPENING
MOM	MOMENT
MTD	MOUNTED
MULL	MULLION
MFR	MANUFACTURER
NC	NORMALLY CLOSED
NIC	NOT IN CONTRACT
NO	NORMALLY OPEN
NOM	NOMINAL
NS	NEAR SIDE
NTS	NOT TO SCALE
NO	NUMBER
OA	OUTSIDE AIR
OC	ON CENTERS
O.D.	OUTSIDE DIAMETER
OPNG	OPENING
PC.	PERFORATED CEILING
PL	PLATE
PLAS	PLASTER
PNL	PANEL
PRESS	PRESSURE
PSI	POUNDS PER SQUARE INCH
PSIG	POUNDS PER SQUARE INCH GAUGE
PTS	POINTS
PWR	POWER
PRV	POWER ROOF VENTILATOR
PVC	POLYVINYL CHLORIDE
PAVT	PAVEMENT
PMF	PREMOUNTED FILLER
QUAN	QUANTITY
R	RADIUS
R	RISER
RA	RETURN AIR
R.B.	RUBBER COVE BASE
RECP	RECEPTACLE
REF	REFERENCE
REG	REGISTER
REINF	REINFORCING
REQD	REQUIRED

REV	REVERSE
RH	RIGHT HAND
RHR	RIGHT HAND REVERSED
RPM	REVOLUTIONS PER MINUTE
RM	ROOM
SOG	SLAB ON GROUND
SAN	SANITARY
S.D.	STORM DRAIN
SD	SPLITTER DAMPER
SECT	SECTION
SP	STATIC PRESSURE
SS	SOIL WASTE DRAIN
S.S.	SANITARY SEWER
STIFF	STIFFENER
STL	STEEL
STR	STANDARD
SUBSTA	SUBSTATION
SUSP	SUSPENDED
SW	SWITCH
SYM	SYMMETRICAL
SYM	SYMBOL
SYS	SYSTEM
STA	STATION
STR	STRUCTURAL
STD	STANDARD
T	TREAD
TECH	TECHNICAL
TEL	TELEPHONE
TERM	TERMINAL
THK	THICK
TP	TOILET PAPER
TRANSF	TRANSFORMER
TWR	TOWER
TYP	TYPICAL
UG	UNDERGROUND
V	VENT
VAT	VINYL ASBESTOS TILE
VEL	VELOCITY
VT	VINYL TILE
VTR	VENT THRU ROOF
VERT	VERTICAL
WB	WET BULB
WD	WINDOW DIMENSION
WF	WIDE FLANGE
WHA	WATER HAMMER ARRESTOR
W.P.	WATER PROOFING
WWF	WELDED WIRE FABRIC

NATIONAL AERONAUTICS AND SPACE ADMINISTRATION — M S F C — HUNTSVILLE ALABAMA

SANDERS & THOMAS INC. POTTSTOWN PA. WASH. D.C. MONT. ALA.

EXTENSION OF LOAD TEST ANNEX (BUILDING NO. 4619)

ABBREVIATIONS

CONTRACT NO. NAS8-12014 — FILE NO. M 8967

W.A. Sanders PE — 12 MAY 64

R.L. Garrett — 6/15/64

W.C.P. & D. Clarence Jr. — 6-16-64

DESIGNED BY: GW; T.C.; N.M.

APPROVED / AMENDED: W.K. Rhode — June 5, 1964

DRAWING NO. F&D-C-4619-G3

F

G3

4619

MSFC MASTER BID DISK 11-18-2013

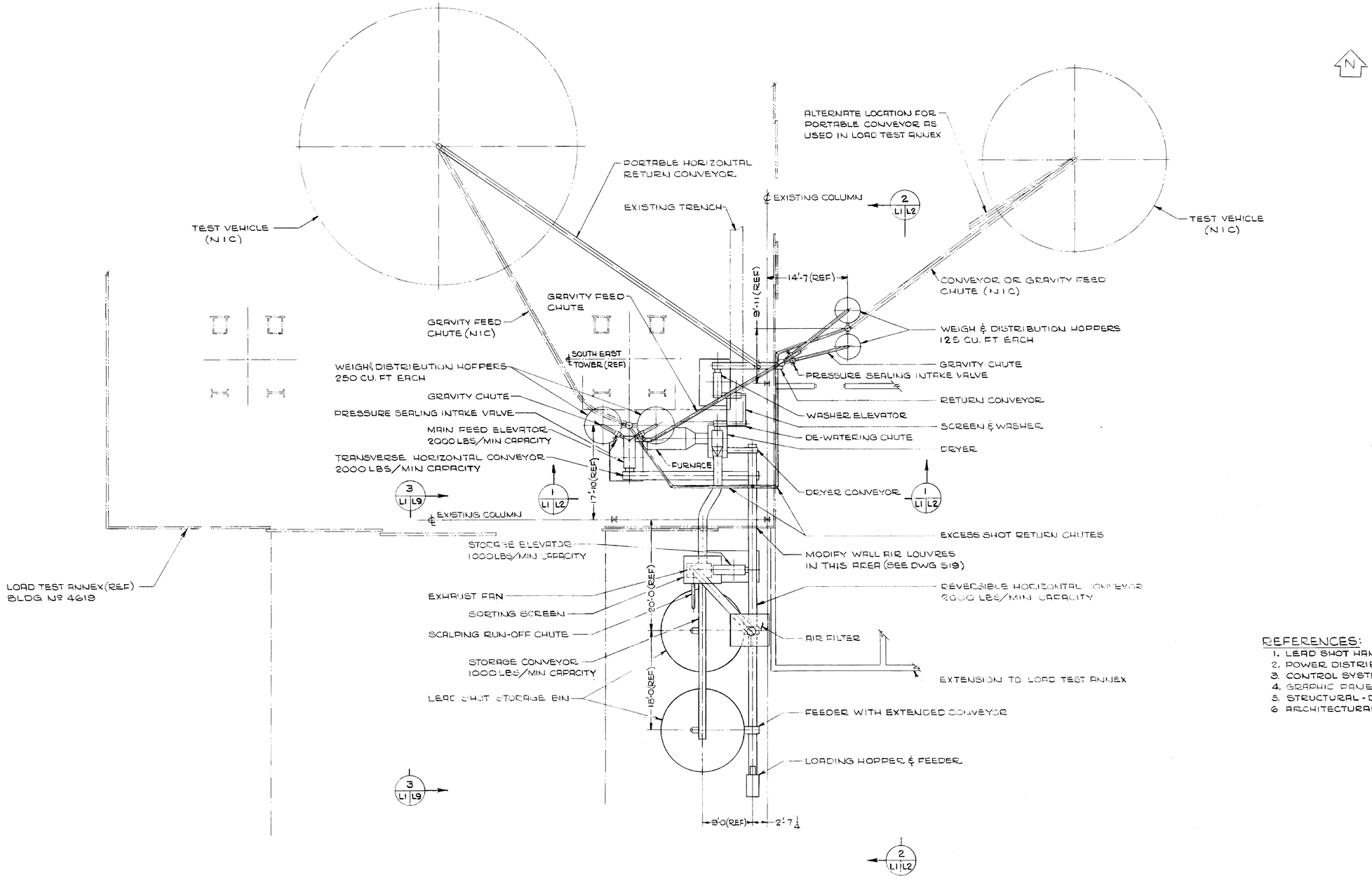

PLAN VIEW

REFERENCES:

1. LEAD SHOT HANDLING SYSTEM - DWGS L1 THRU L10.
2. POWER DISTRIBUTION - DWG E17.
3. CONTROL SYSTEM DIAGRAMS - DWGS E18 E19 & E20.
4. GRAPHIC PANEL - DWG E21.
5. STRUCTURAL - DWGS S8, S10, S18 & S19.
6. ARCHITECTURAL - DWG A10.

NATIONAL AERONAUTICS AND SPACE ADMINISTRATION — M S F C — HUNTSVILLE, ALABAMA

SANDERS & THOMAS INC. POTTSTOWN PA. WASH. D.C. MONT. ALA

EXTENSION OF LOAD TEST ANNEX (BUILDING NO. 4619)

LEAD SHOT HANDLING SYSTEM PLAN

NASA AE CONT. NO. NAS8-12014		ENG. NO. 9012 M S F C
DESIGNED: W A Sanders D E	APPROVED: MANAGER	APPROVED: CHIEF DES. OR AGENCY
DATE: 12 MAY 64	CHK. BY:	ASSISTANT
DRAWN: A. DINNOCENZO LEWARS IAEGER	APPROVED: RECOMMENDED	DRWG. NO. F8D-C-4619-L1
SCALE: 1/8 = 1'-0	MECHANICAL DATE: 6-1-64	
	DES. NO. F 8 D 433	

L1

4619

MSFC MASTER BID DISK 11-18-2013

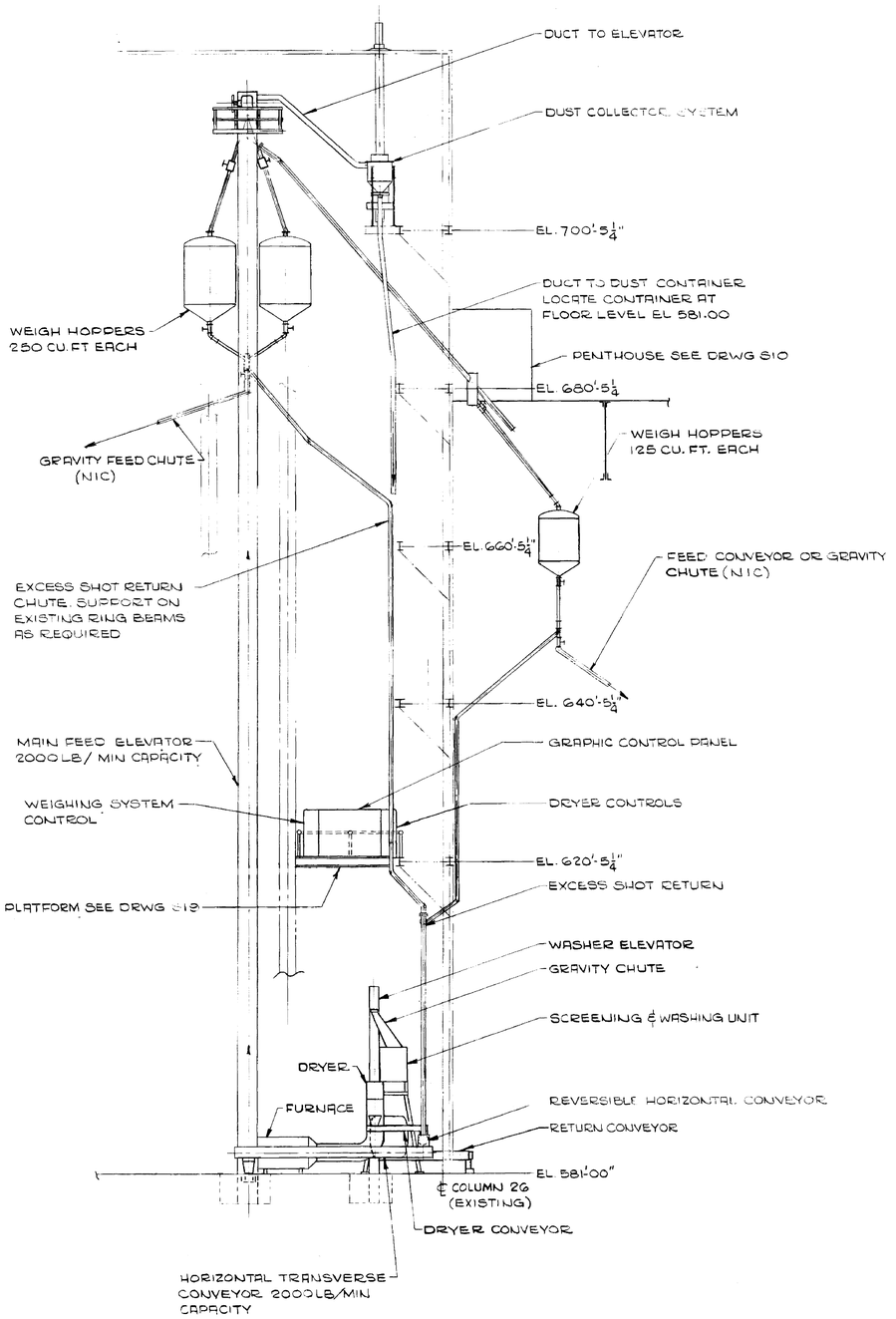

SECTION 1 / L1L2

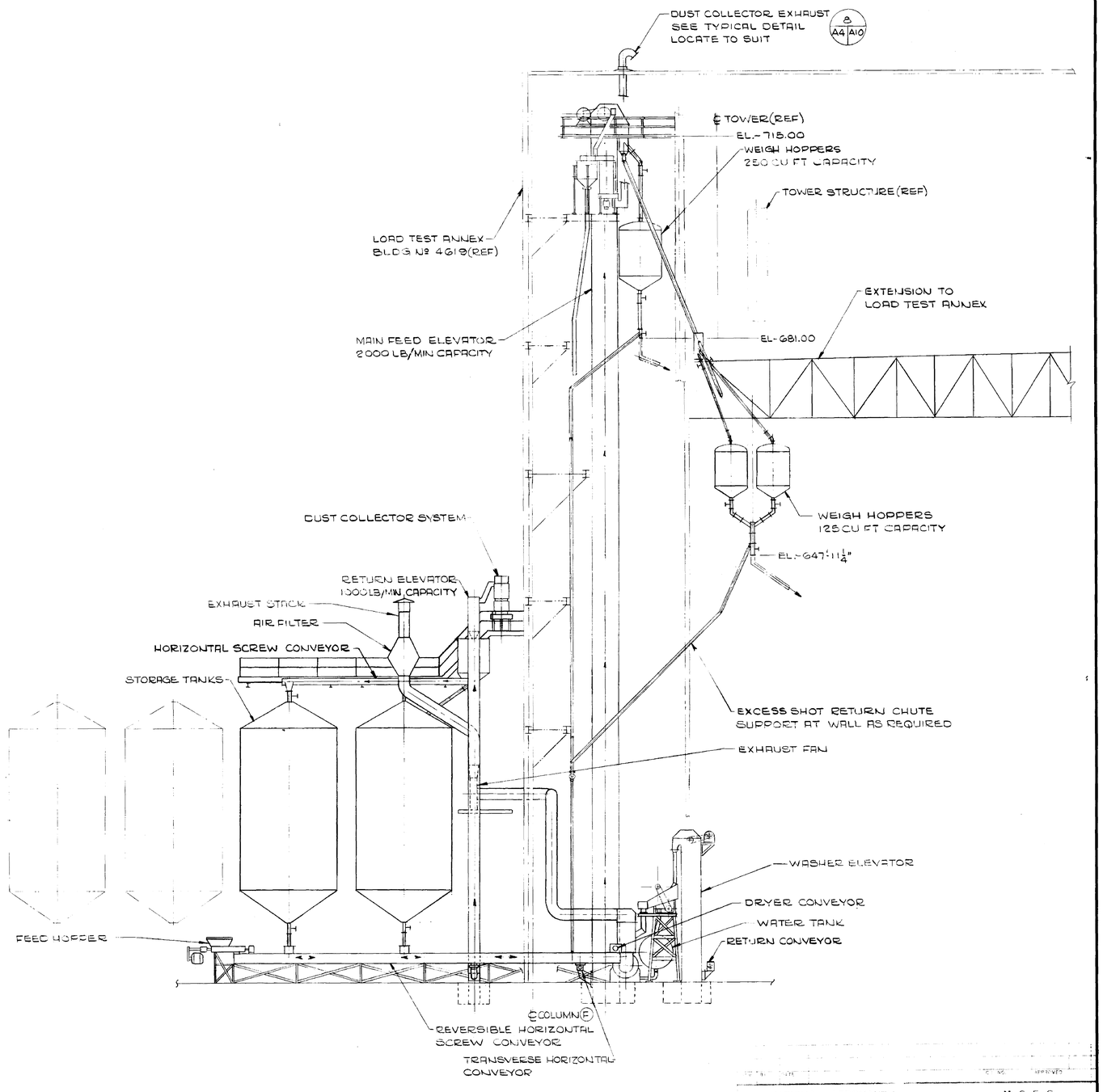

SECTION 2 / L1L2

NATIONAL AERONAUTICS AND SPACE ADMINISTRATION		M S F C HUNTSVILLE ALABAMA
SANDERS & THOMAS INC. PITTSTOWN, PA. WASH. D.C. MONT. ALA.		
EXTENSION OF LOAD TEST ANNEX (BUILDING NO. 4619)		
LEAD SHOT HANDLING SYSTEM SECTIONS		
NASA CONT. NO. NAS 8-12014		FILE NO. M S F C 9013
W. Sanders, D.C. 12 MAY 64		
R. DINNOCENZO CIARLETTA JAEGER 1/2" = 1'-0"	APPROVED MECHANICAL 6-1-64	DRWG NO. F&D-C-4619-L2

L2

4619

MSFC MASTER BID DISK 11-18-2013

THIS DRAWING AND SPECIFICATION, OR COPIES THEREOF, FURNISHED BY SANDERS & THOMAS, INC., ARE NOT TO BE USED IN ANY WAY DETRIMENTAL TO THE INTERESTS OF SANDERS & THOMAS, INC., AND IN PARTICULAR THEY ARE NOT TO BE USED IN CONNECTION WITH ANY WORK OR PROJECT OTHER THAN THAT FOR WHICH THEY HAVE BEEN PREPARED AND DEVELOPED BY SANDERS & THOMAS, INC., EXCEPT BY AGREEMENT IN WRITING AND APPROPRIATE COMPENSATION TO SANDERS & THOMAS, INC. THESE DRAWINGS AND SPECIFICATIONS ARE NOT TO BE LOANED, COPIED OR FURNISHED TO ANY PERSON, FIRM OR CORPORATION FOR ANY PURPOSE WHATSOEVER WITHOUT THE PERMISSION OF SANDERS & THOMAS, INC., EXCEPT IN CONNECTION WITH WORK FOR THE OWNER FOR WHOM THEY WERE PREPARED.

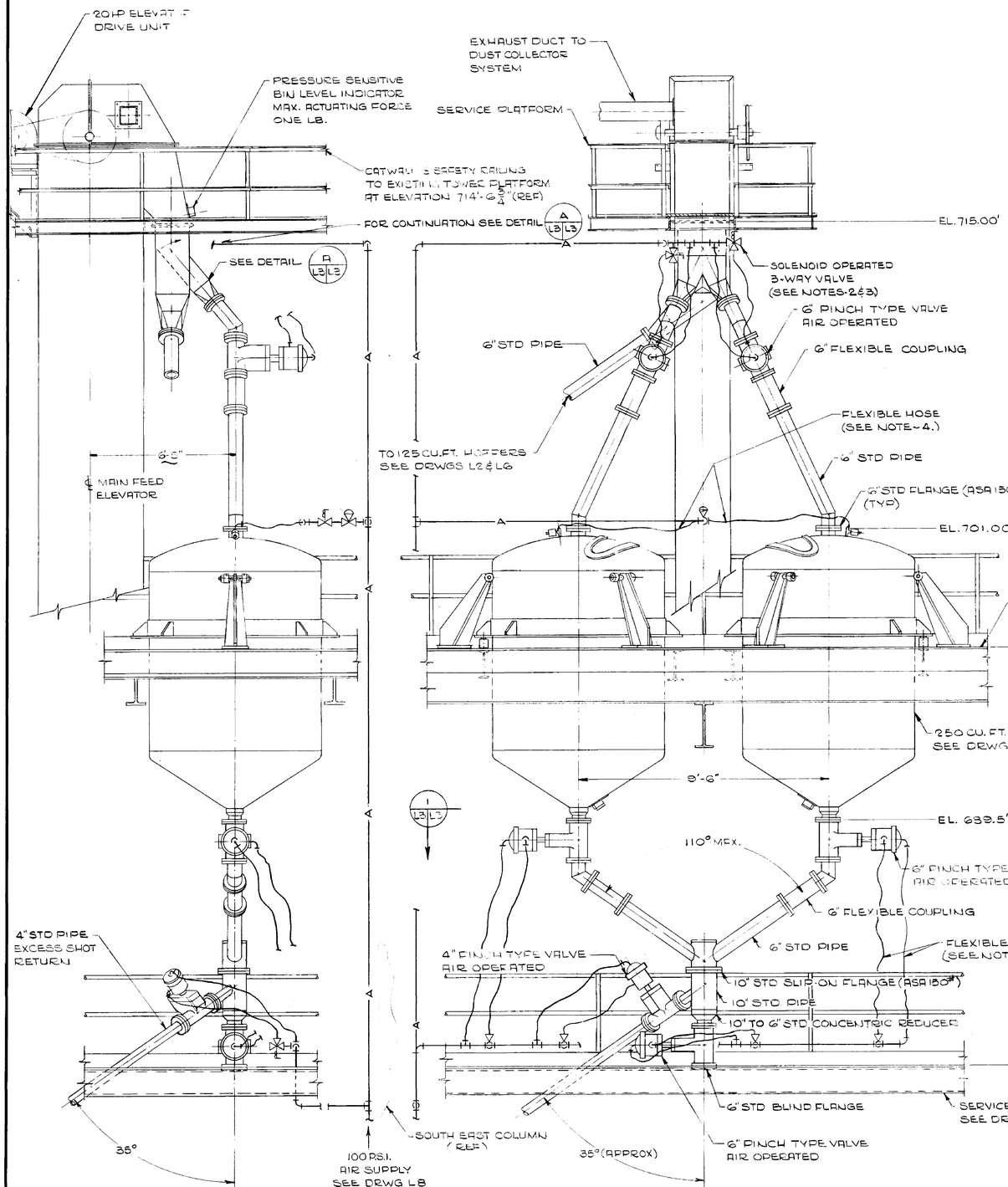

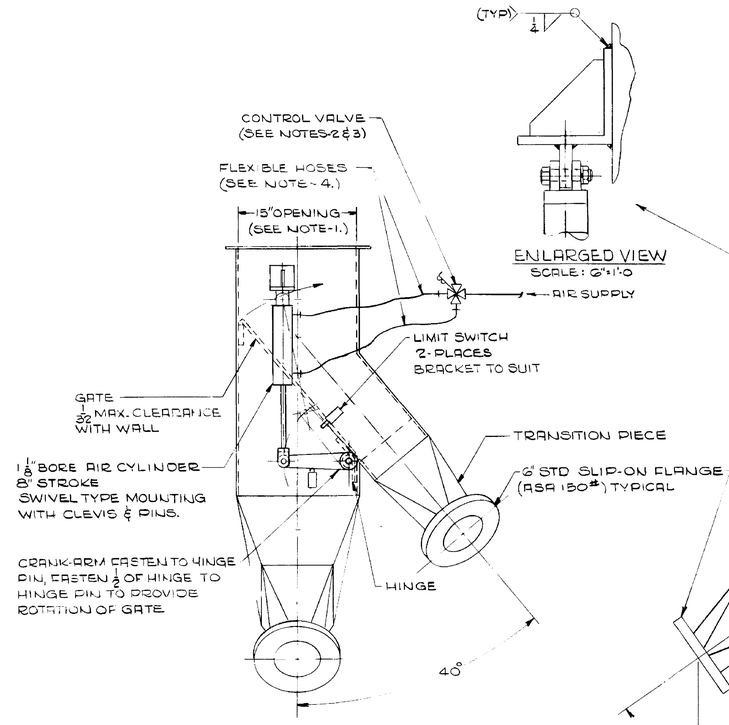

ENLARGED VIEW
SCALE: 6"=1'-0

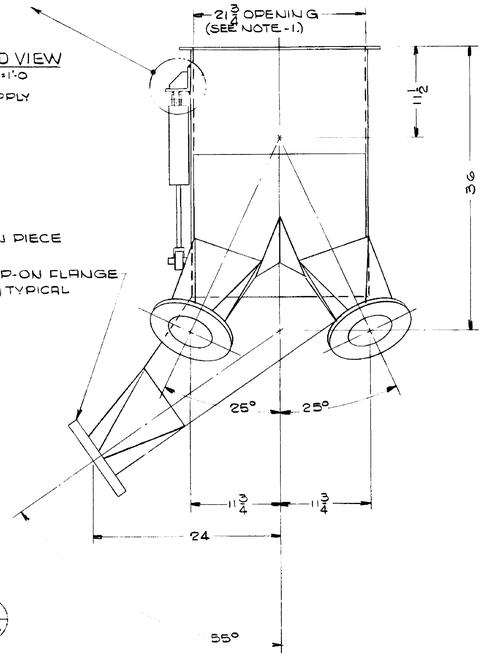

DETAIL A L3 L3
SCALE: 3"=1'-0"

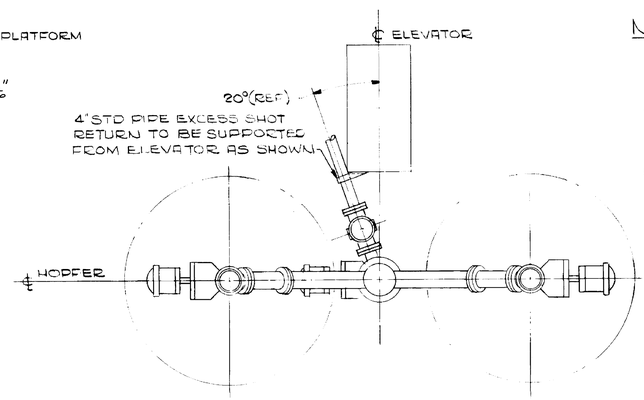

SECTION 1 L3 L3

NOTES:

1. FINAL DIMENSIONS SHALL CORRESPOND TO THE ACTUAL ELEVATOR DIMENSIONS.
2. SEE DRWG L10 FOR SCHEMATIC OF AIR CONTROL SYSTEM.
3. SUPPORTS FOR AIR PIPING & VALVING TO BE DETERMINED AT INSTALLATION.
4. HOSES SHALL BE 1/2" I.D., SUITABLE FOR OPERATION AT 100 P.S.I., CONFORMING TO S.A.E. 20R1.
5. VALVE LEGEND:
   - 4-WAY SOLENOID OPERATED VALVE
   - 3-WAY SOLENOID OPERATED VALVE
   - 2-WAY SOLENOID OPERATED VALVE
   - PRESSURE REGULATING VALVE

NATIONAL AERONAUTICS AND SPACE ADMINISTRATION — M S F C — HUNTSVILLE ALABAMA

SANDERS & THOMAS INC POTTSTOWN PA - WASH D.C. MONT ALA

EXTENSION OF LOAD TEST ANNEX (BUILDING NO. 4619)

LEAD SHOT HANDLING SYSTEM ELEVATOR AND WEIGH HOPPERS (250 CU. FT.) INSTALLATION

NASA-MSFC CONT. NO. NAS8-12214 — FILE NO M.S.F.C 9014

DES. W.A. Sanders DATE 12 MAY 64 — APPROVED

CHK. A. DINNOCENZO CIARLETTA — CHIEF DESIGN BRANCH NASA DATE

ENGR. JAGER — MECHANICAL — DIVISION DATE 6-7-64

SCALE 1/2"=1'-0" & AS NOTED — SPEC NO. F & D-433

DRWG NO. F&D-C-4619-L3

L3

4619

MSFC MASTER BID DISK 11-18-2013

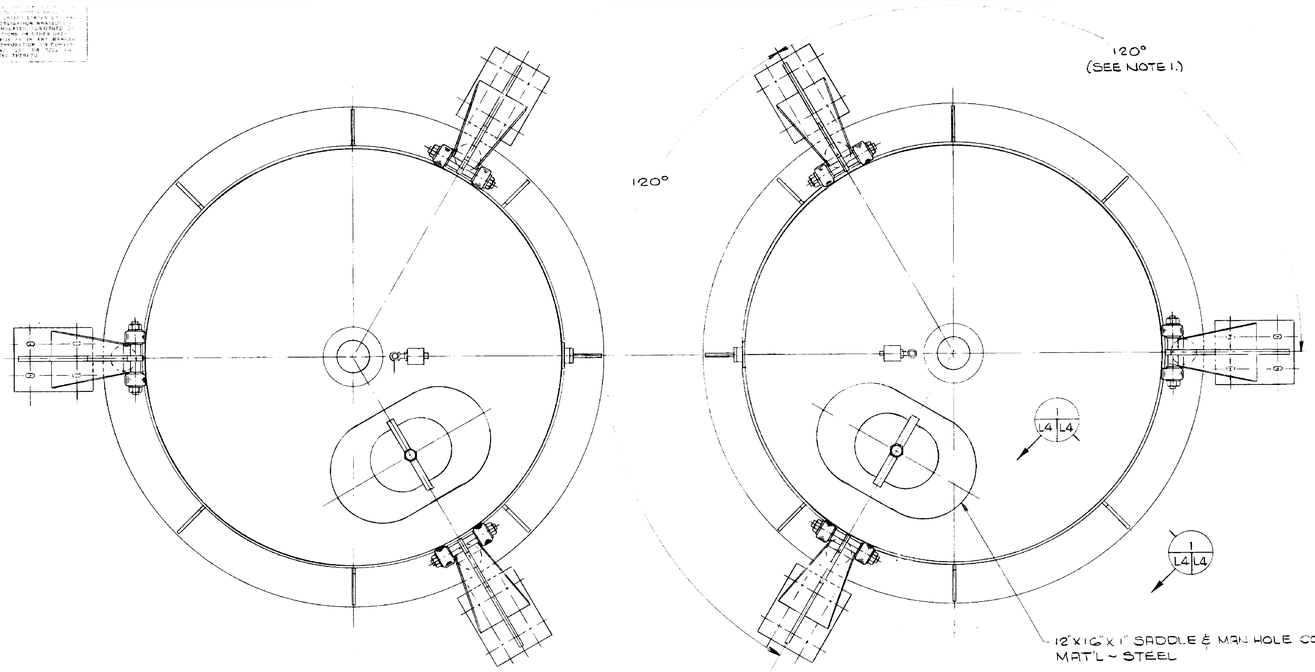

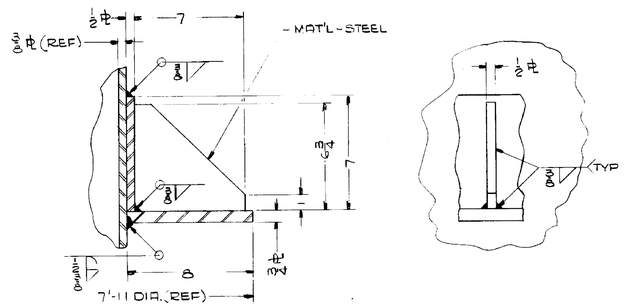

SECTION (1 / L4 L4)
TYPICAL 3-PLACES PER EACH HOPPER
SCALE: 3"=1'-0"

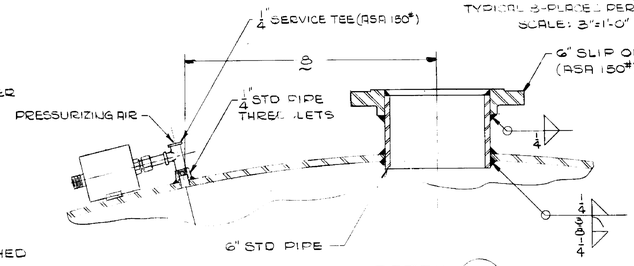

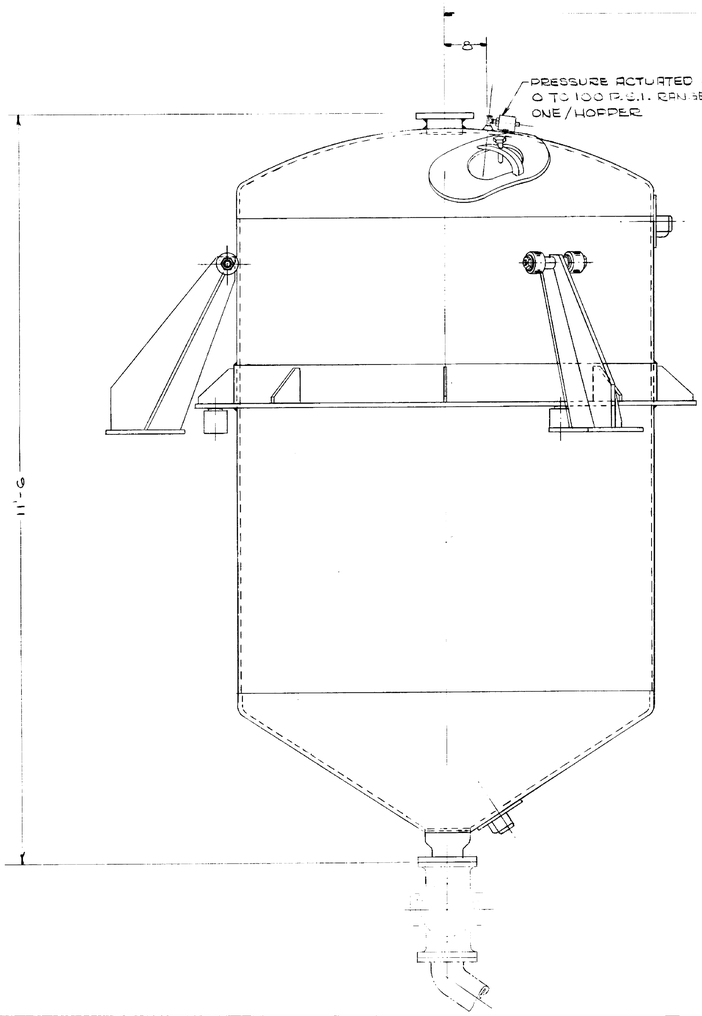

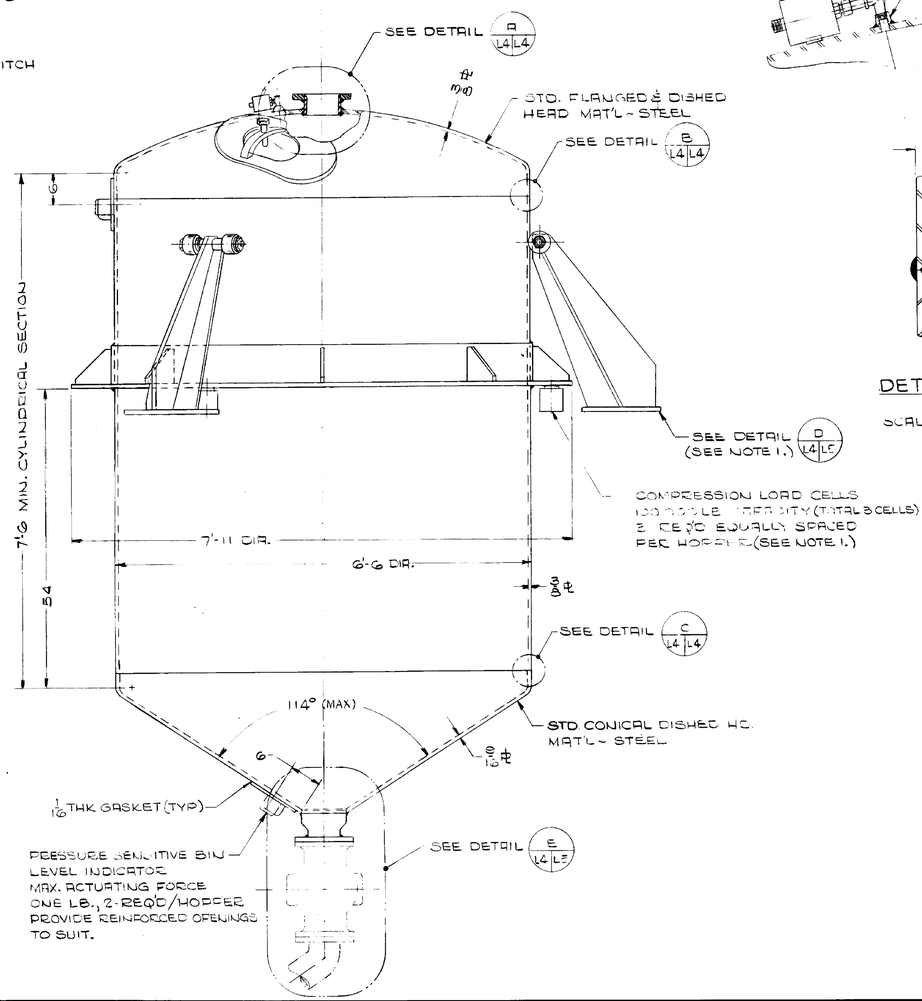

DETAIL B (L4 L4)
SCALE: 12"=1'-0"

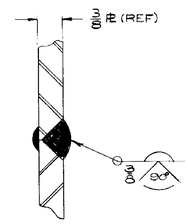

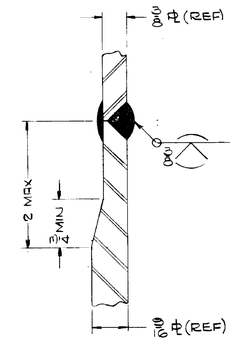

DETAIL C (L4 L4)
SCALE: 12"=1'-0"

NOTES:
1. LOAD CELLS & BRACKETS MUST BE EQUALLY SPACED ON CIRCUMFERENCE OF HOPPER. POSITION RELATIVE TO HOPPER SHALL BE DETERMINED BY SUPPORT STRUCTURE.

NO.	DATE	BY	APPROVED

NATIONAL AERONAUTICS AND SPACE ADMINISTRATION — M S F C — HUNTSVILLE, ALABAMA

SANDERS & THOMAS INC. POTTSTOWN PA. WASH. D.C. MONT. ALA.

EXTENSION OF LOAD TEST ANNEX (BUILDING NO. 4619)

LEAD SHOT HANDLING SYSTEM
WEIGH HOPPERS (250 CU. FT.)
DETAILS

NASA GF CONT. NO. NAS 8-2014		FILE NO. 9015 M S F C
DRN.	APPROVED BY: AMENDED	APPROVED
DATE 12 MAY 64	CHK. DATE	CHIEF DESIGN BRANCH NASA DATE
A. DINNOCENZO	APPROVAL RECOMMENDED:	DRWG. NO.
CHK'D CARLETTA	CHIEF MECHANICAL SECTION	F8D-C-4619-L4
APP'D TAEGER	DIVISION DATE 6-1-64	
1"=1'-0" & AS NOTED	SPEC. NO. F 8 D 433	

L4

4619

MSFC MASTER BID DISK 11-18-2013

U.S. GOVERNMENT DRAWINGS, SPECIFICATIONS OR OTHER DATA FURNISHED AND PURSUANT TO ANY CONTRACT WITH A DEPARTMENT OF THE GOVERNMENT FOR ANY PURPOSE WHATSOEVER ARE NOT TO BE REGARDED BY IMPLICATION OR OTHERWISE AS IN ANY MANNER LICENSING THE HOLDER OR ANY OTHER PERSON OR CORPORATION, OR CONVEYING ANY RIGHTS OR PERMISSION TO MANUFACTURE, USE OR SELL ANY PATENTED INVENTION THAT MAY IN ANY WAY BE RELATED THERETO.

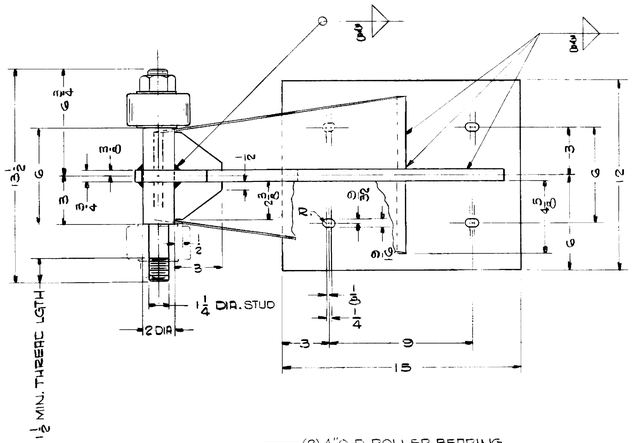

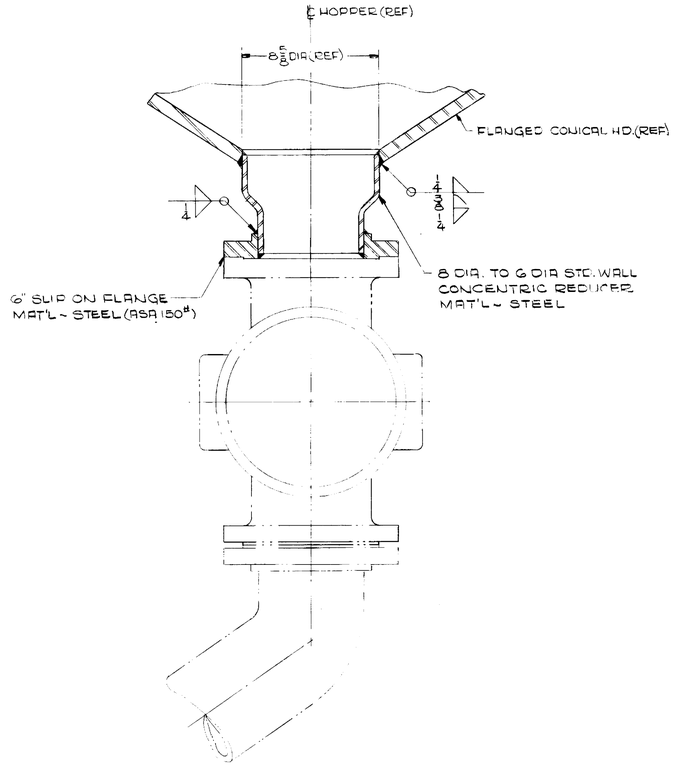

DETAIL E (L4 L5)

SCALE: 3"=1'-0"

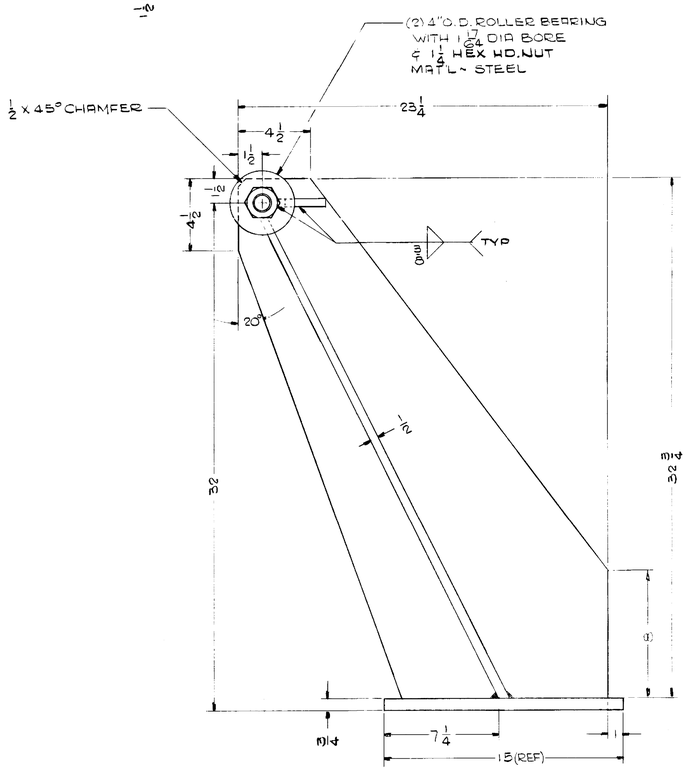

DETAIL D (L4 L5)

MAT'L ~ STEEL SCALE: 3"=1'-0"

NATIONAL AERONAUTICS AND SPACE ADMINISTRATION — M S F C — HUNTSVILLE, ALABAMA

SANDERS & THOMAS, INC. POTTSTOWN PA. WASH., D.C. MONT., ALA.

EXTENSION OF LOAD TEST ANNEX (BUILDING NO. 4619)

LEAD SHOT HANDLING SYSTEM
WEIGH HOPPERS (250 CU. FT.)
DETAILS

NASA CONTRACT NO. NAS8-1201	FILE NO. M S F C 9016
DESIGNED: A. DINNOCENZO	APPROVED: CHIEF DESIGN BRANCH
DRAWN: CIARLETTA	DATE: 12 MAY 64
TRACED: IAEGER	RECOMMENDED: MECHANICAL SECTION
CHECKED:	DATE: 6-1-64
SCALE: 3"=1'-0"	SPEC. NO. F & D 423
	DRWG. NO. F&D-C-4619-L5

L5

F

MSFC MASTER BID DISK 11-18-2013

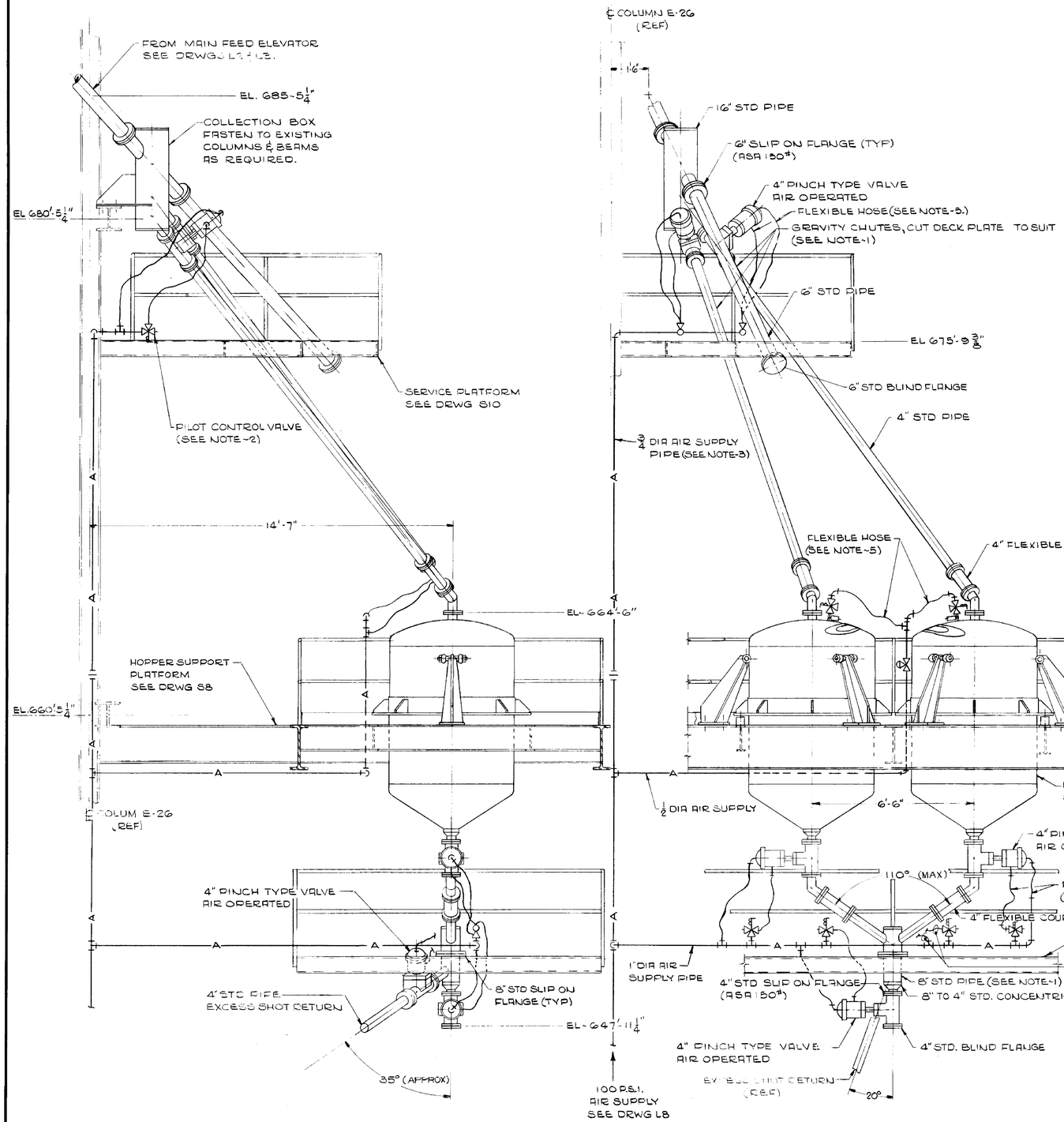

NOTES:

1. SUPPLY & DISCHARGE CHUTES SHALL BE SUPPORTED FROM ROOF & HOPPER SUPPORT PLATFORM AFTER ALIGNMENT.
2. SEE DRWG L10 FOR SCHEMATIC OF AIR CONTROL SYSTEM.
3. SUPPORTS FOR AIR PIPING & VALVING TO BE DETERMINED AT INSTALLATION.
4. VALVE LEGEND:
   - TWO-WAY SOLENOID VALVE
   - THREE-WAY SOLENOID VALVE
   - PRESSURE REGULATING VALVE
5. HOSES SHALL BE ½" I.D., SUITABLE FOR OPERATION AT 100 P.S.I., CONFORMING TO SAE 20R1.

L6

NATIONAL AERONAUTICS AND SPACE ADMINISTRATION — M S F C — HUNTSVILLE, ALABAMA

SANDERS & THOMAS, INC. POTTSTOWN PA. WAS. D.C. MONT. ALA.

EXTENSION OF LOX TEST ANNEX (BUILDING NO. 4619)

LEAD SHOT HANDLING SYSTEM
WEIGH HOPPERS (125 CU. FT.)
INSTALLATION

DESIGN CONT. NO. NAS 8-1201	JOB NO. 9017
M.A. Sanders, P.E. 12 MAY 64	
A. DINNOCENZO, CIARLETTA, JAEGER	DRWG. NO. F8D-C-4619-L6
½"=1'-0"	MECHANICAL

4619

MSFC MASTER BID DISK 11-18-2013

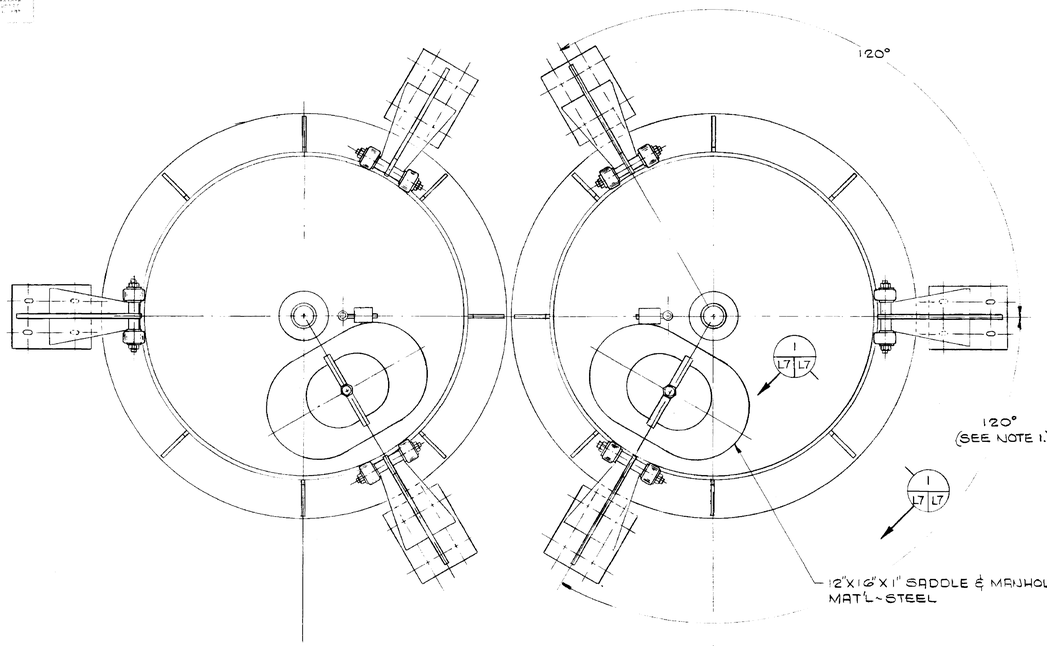

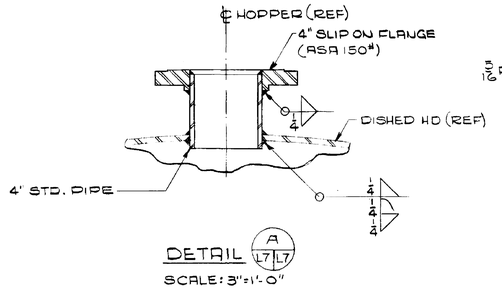

DETAIL A L7 L7
SCALE: 3"=1'-0"

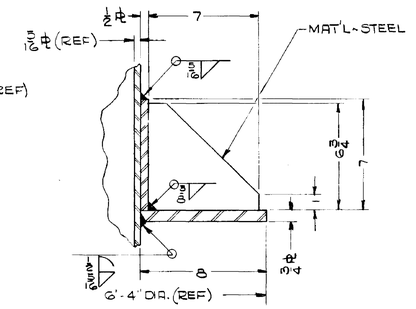

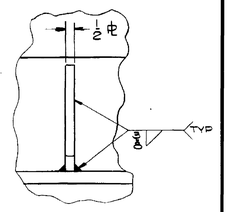

SECTION I L7 L7
TYPICAL 8 PLACES/HOPPER
SCALE: 3"=1'-0"

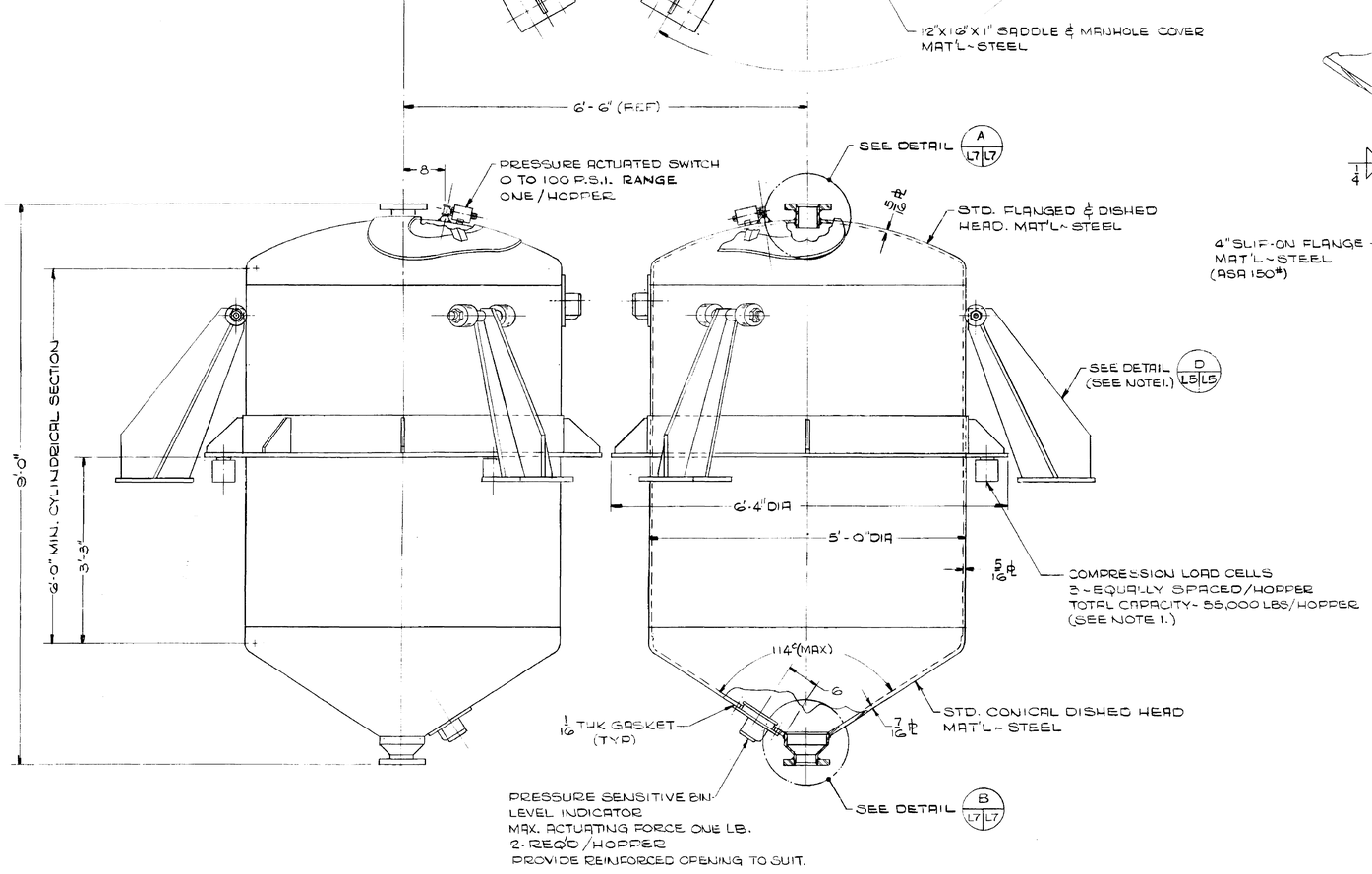

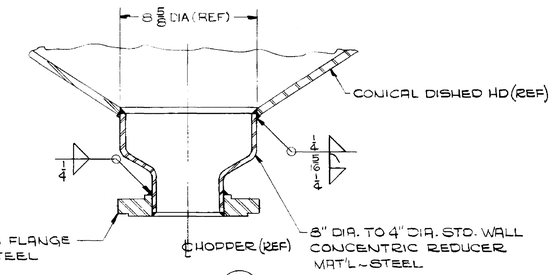

DETAIL B L7 L7
SCALE: 3"=1'-0"

NOTES:
1. LOAD CELLS & BRACKETS MUST BE EQUALLY SPACED ON CIRCUMFERENCE OF HOPPER. POSITION RELATIVE TO HOPPER SHALL BE DETERMINED BY SUPPORT STRUCTURE.

NATIONAL AERONAUTICS AND SPACE ADMINISTRATION		M S F C HUNTSVILLE ALABAMA
SANDERS & THOMAS INC. POTTSTOWN PA WASH. D.C. MONT. ALA.		
EXTENSION OF LOAD TEST ANNEX (BUILDING NO. 4619)		
LEAD SHOT HANDLING SYSTEM WEIGH HOPPERS (125 CU. FT.) DETAILS		
CONTRACT NO. NAS8-12014		FILE NO. M S F C 9018
DRAWN: W.A. Sanders D.S. 12 MAY 64	APPROVED:	APPROVED:
DESIGNED: R. DINNOCENZO CIARLETTA ENGINEER	APPROVAL RECOMMENDED:	CHIEF, LAUNCH VEHICLE STRUCTURES BRANCH
SCALE: 1"=1'-0" & AS NOTED	CHIEF MECHANICAL DESIGN DATE: 6-1-64 SPEC. NO. F & D 433	DRWG. NO. F&D-C-4619-L7

L7

4619

MSFC MASTER BID DISK 11-18-2013

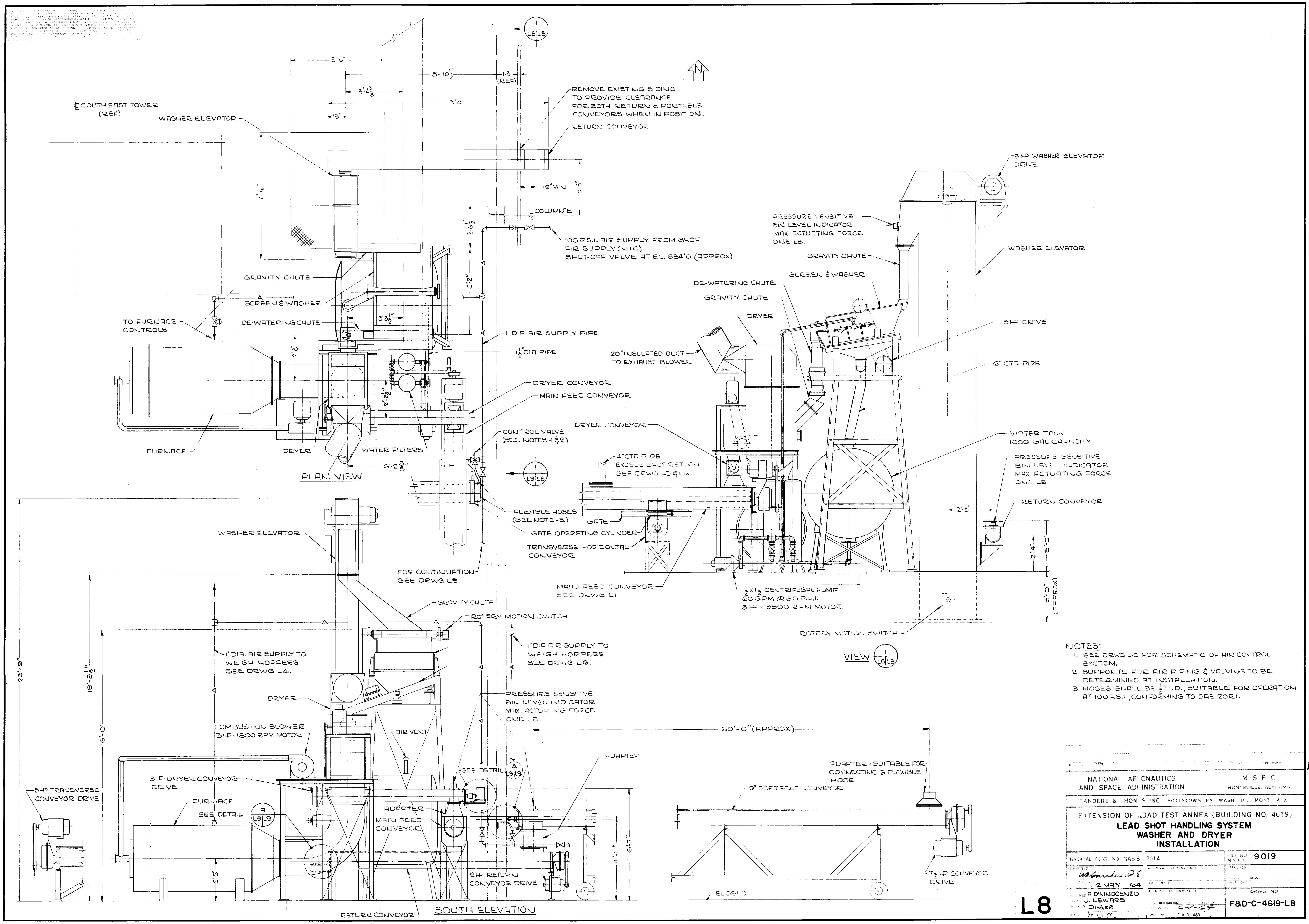

NOTES:

1. SEE DRWG L10 FOR SCHEMATIC OF AIR CONTROL SYSTEM.
2. SUPPORTS FOR AIR PIPING & VALVING TO BE DETERMINED AT INSTALLATION.
3. HOSES SHALL BE ½" I.D., SUITABLE FOR OPERATION AT 100 P.S.I., CONFORMING TO SAE 20R1.

NATIONAL AERONAUTICS AND SPACE ADMINISTRATION — M S F C HUNTSVILLE, ALABAMA

SANDERS & THOMAS INC. POTTSTOWN PA - WASH., D.C. - MONT., ALA

EXTENSION OF LOAD TEST ANNEX (BUILDING NO. 4619)

LEAD SHOT HANDLING SYSTEM
WASHER AND DRYER
INSTALLATION

NASA AE CONT NO NAS 8-2014

FILE NO M S F C 9019

SUBMITTED W.A. Sanders, P.E.

DATE 12 MAY 64

DESIGNED A. DINNOCENZO

DRAWN J. LEWARS

CHECKED IAEGER

SCALE ½" = 1'-0"

MECHANICAL

DESIGN DATE 6-1-64

SPEC NO. F & D-433

DRWG. NO. F&D-C-4619-L8

L8

4619

MSFC MASTER BID DISK 11-18-2013

ALL RIGHTS RESERVED UNDER THE COPYRIGHT LAWS OF THE UNITED STATES. THIS DRAWING IS THE PROPERTY OF THE NATIONAL AERONAUTICS AND SPACE ADMINISTRATION AND IS LOANED SUBJECT TO THE AGREEMENT AND UNDERSTANDING THAT IT SHALL NOT BE REPRODUCED, COPIED OR LENT IN WHOLE OR IN PART, NOR USED AS THE BASIS FOR MANUFACTURE OR SALE OF APPARATUS OR TECHNICAL PROCESS DESCRIBED OR ILLUSTRATED THEREIN WITHOUT THE WRITTEN CONSENT OF THE ADMINISTRATION. NO LICENSE EXPRESS OR IMPLIED IS GRANTED HEREBY OTHER THAN FOR LOANING AND RETURNING. THE RECIPIENT BY ACCEPTANCE OF THIS DRAWING AGREES TO INDEMNIFY THE ADMINISTRATION FROM ANY LIABILITY ARISING FROM ANY USE THEREOF.

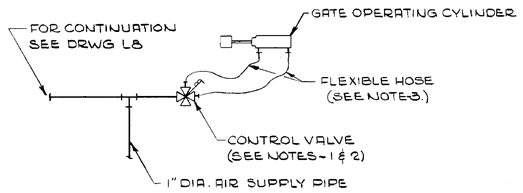

DETAIL B (L9|L9)
PLAN SCHEMATIC OF AIRLINE
SCALE: NONE

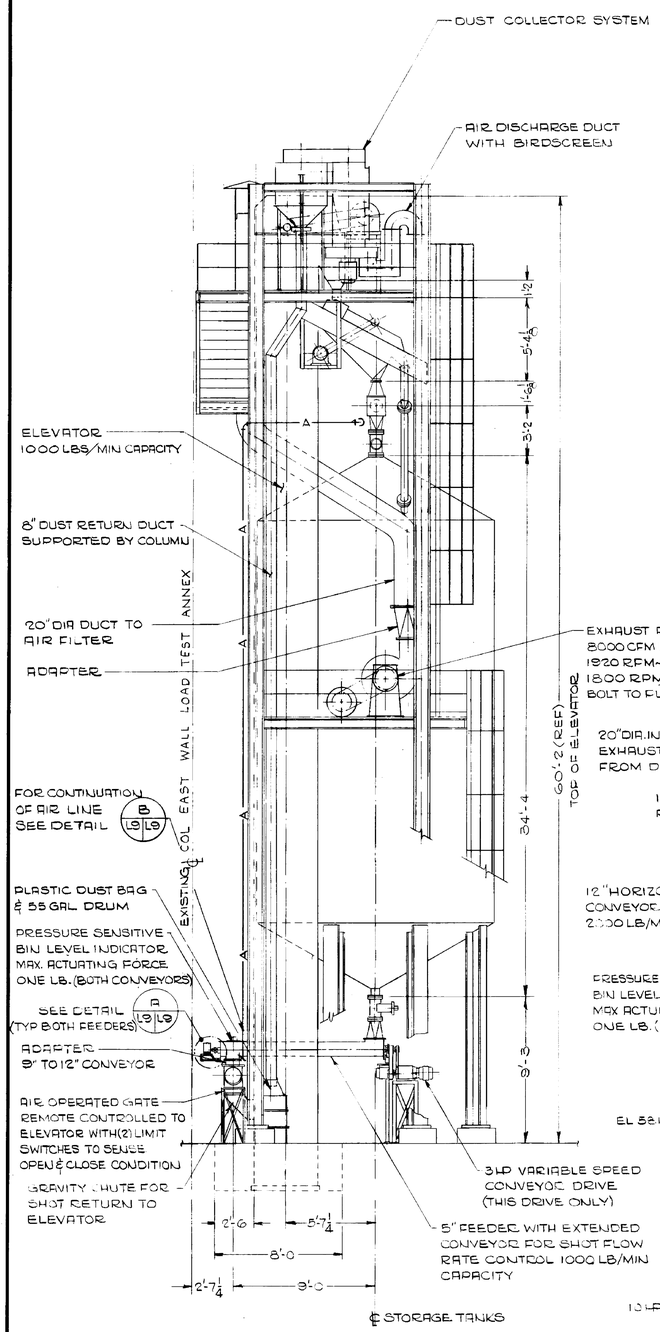

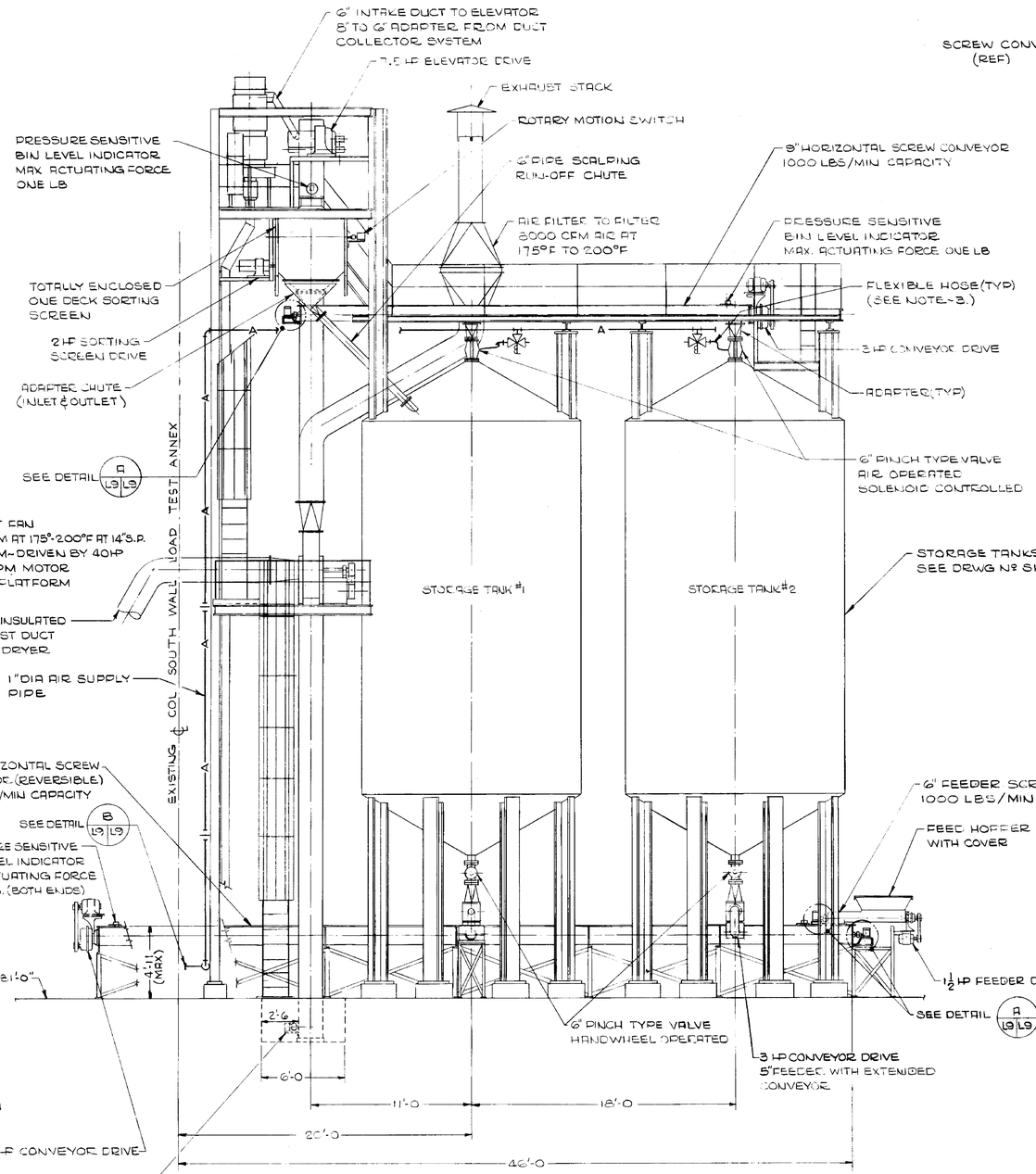

VIEW 3 (L1|L9)

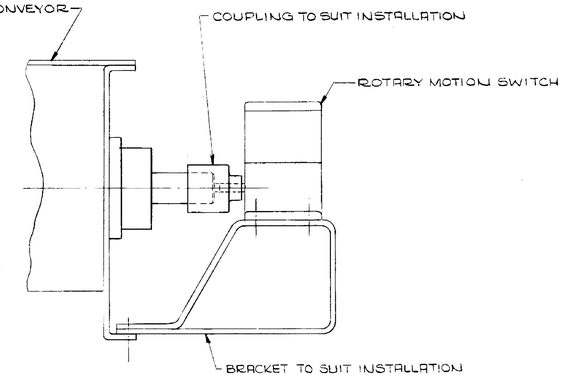

TYPICAL DETAIL A (L9|L9)
SCALE: 3"=1'-0"

NOTES:
1. SEE DRWG L10 FOR SCHEMATIC OF AIR CONTROL SYSTEM.
2. SUPPORTS FOR AIR PIPING & VALVING TO BE DETERMINED AT INSTALLATION.
3. HOSES SHALL BE ½" I.D., SUITABLE FOR OPERATION AT 100 P.S.I., CONFORMING TO SAE-20R1.
4. VALVE LEGEND:
   - THREE-WAY SOLENOID OPERATED VALVE
   - FOUR-WAY SOLENOID OPERATED VALVE

NO.	DATE	APPROVED	F
NATIONAL AERONAUTICS AND SPACE ADMINISTRATION		M S F C HUNTSVILLE, ALABAMA	
SANDERS & THOMAS INC. POTTSTOWN, PA. WASH. D.C. MONT. ALA.			
EXTENSION OF LOAD TEST ANNEX (BUILDING NO. 4619)			
LEAD SHOT HANDLING SYSTEM STORAGE TANKS INSTALLATION			
NASA AE CONT. NO. NAS8-12014		FILE NO. M S F C 9020	
DESIGNED R. DINNOCENZO; DRAWN J. LEWARS; CHECKED JAEGER	DATE 10 MAY 64	APPROVED RECOMMENDED	DRWG. NO. F&D-C-4619-L9
SCALE 1/4"=1'-0" & AS NOTED		DATE MECHANICAL 6-1-64	

L9

MSFC MASTER BID DISK 11-18-2013

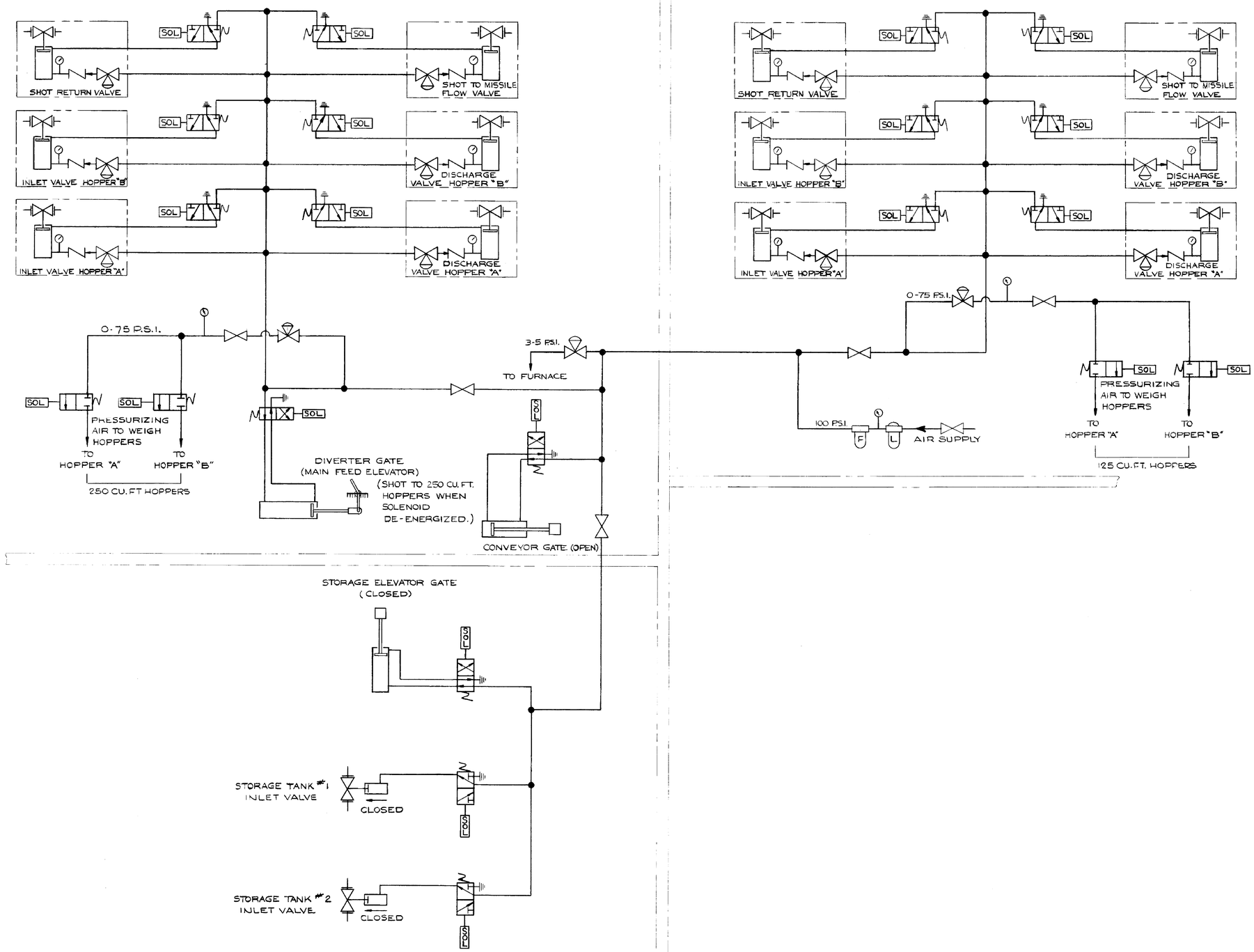

NOTES:

1. ALL CONNECTIONS FROM PILOT VALVES TO SHOT FLOW CONTROL VALVES & CYLINDERS, & AIR VALVES TO WEIGH HOPPERS SHALL BE ½" I.D. FLEXIBLE HOSE CONFORMING TO SAE 20R1.
2. VALVE LEGEND:

SOL — SOLENOID OPERATED, 2 POSITION 4-WAY VALVE

SOL — SOLENOID OPERATED, 2 POSITION 3-WAY VALVE

SOL — SOLENOID OPERATED, 2-WAY VALVE

PRESSURE REDUCING VALVE

F L — FILTER & LUBRICATOR

NATIONAL AERONAUTICS AND SPACE ADMINISTRATION — M S F C — HUNTSVILLE, ALABAMA

SANDERS & THOMAS INC. POTTSTOWN PA. WASH. D.C. MONT. ALA.

EXTENSION OF LOAD TEST ANNEX (BUILDING NO. 4619)

LEAD SHOT HANDLING SYSTEM

SCHEMATIC

AIR CONTROLS

NASA AE CONT. NO. NAS8-12014

M S F C 9021

DRAWN: A. DINNOCENZO
CHECKED: BOLONSKI
TRACED: JAEGER
CHECKED: NONE

APPROVED: H.A. Sanders P.E. 12 MAY 64

APPROVAL RECOMMENDED:

APPROVAL RECOMMENDED: MECHANICAL DESIGN DATE: 6-1-64

APPROVED:

DRWG. NO. F&D-C-4619-L10

SPEC. NO. F & D 423

L10

4619

MSFC MASTER BID DISK 11-18-2013

THIS DRAWING AND SPECIFICATION, OR COPIES THEREOF, FURNISHED BY ... ARE AND SHALL REMAIN THE PROPERTY OF ... THEY ARE NOT TO BE USED IN WHOLE OR IN PART FOR ANY WORK BY ANY GOVERNMENT OR BY OTHERS ON ANY OTHER PROJECT WITHOUT THE WRITTEN AGREEMENT OF ... AND SPECIFIC WRITTEN AGREEMENTS SHALL BE SECURED BEFORE ANY ... IS MADE, OR HOLDER IS ENTITLED, FOR USE BY ANY PERSON OR ORGANIZATION OF CONVENTIONAL, OPTICAL OR OTHER REPRODUCTIONS OF THIS DRAWING OR SPECIFICATION.

NOTES:

1. DUCT SIZES ARE CLEAR INSIDE DIMENSION WITH INSULATION LINER APPLIED.
2. AC UNITS 2,3,4,5,6 AND H&V UNITS NO. 1,2,4 SHALL BE SUPPORTED FROM OVERHEAD ROOF STRUCTURES.

N

FOR CONN. SEE DWG. C1

FOR MECHANICAL ROOM EQUIPMENT & PIPING SEE ENLARGED PLAN ON DWG Nº M-3

BELOW FIRST FLOOR — PCR

HWS — HWR — 1½" — ½" UP TO CONVECTORS IN ENTRY 137

HWS — 3/4"

PITCH PIPES DOWN — BELOW FIRST FLOOR — 6" — C — CR

FOR CONTINUATION OF PIPING SEE DWG Nº M-2

AC UNIT #1

01

S-1

BELT GUARD

EF-4 NEAR CEILING TUNNEL EXH FAN DISCHARGE TO HIGH BAY AREA

PLATFORM HIGH AS POSSIBLE

02

A2

B.1

3" HWR — HWS — CH — CHR — 4"

NOTE: SEE DWG E-11 FOR CABLE TRAY LOCATIONS IN THIS AREA

05

REMOVABLE FLOOR SLAB ABOVE

HWR — CH — HWS — CHR — 4"

AT TUNNEL CEILING HIGH AS POSSIBLE

3" HWS — HWR — CH — CHR — 4"

54"×36" BACKDRAFT DAMPER HIGH IN WALL

05

EF-4 NEAR CEILING TUNNEL EXH FAN DISCHARGE TO HIGH BAY AREA

BELT GUARD

PLATFORM HIGH AS POSSIBLE

C.6

D.8

G

PIPES UP TO FIRST FLOOR CEILING. FOR CONTINUATION SEE DWG Nº M-2

AT CLG

LIMIT OF PERFORATED CEILING

03

LIMIT OF PERFORATED CEILING

A / M1 / M1

S-3

HYDRAULIC LIFT PUMPING EQUIP IN FLOOR

40×20 — SD — 40×20

54×16 SUPPLY DUCT DISCHARGE TO PERFORATED CEILING

04

FLEXIBLE CONNECTION

80×20 SUPPLY

AC UNIT #7

36×96 RA GRILLE

110"×20" OA DUCT

120"×24" WEATHERPROOF LOUVER WITH BIRDSCREEN IN AREAWAY

OA

36×40 RA DUCT

A / M1 / M1

BASEMENT FLOOR PLAN

SCALE ⅛" = 1'-0"

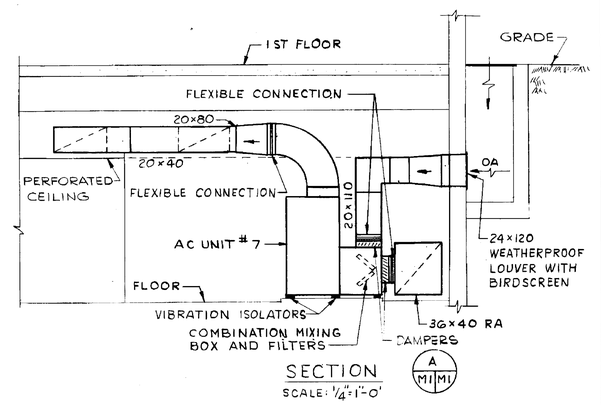

SECTION

SCALE: ¼"=1'-0"

A / M1 / M1

LEGEND

———	HIGH PRESSURE STEAM SUPPLY
——LP——	LOW PRESSURE STEAM SUPPLY
--LPR--	LOW PRESSURE CONDENSATE RETURN
——HWS——	HEATING WATER SUPPLY
--HWR--	HEATING WATER RETURN
——CH——	CHILLED WATER SUPPLY
--CHR--	CHILLED WATER RETURN
——C——	CONDENSER WATER SUPPLY
--CR---	CONDENSER WATER RETURN
--PCR---	PUMPED CONDENSATE RETURN
	GATE VALVE
	BALANCING VALVE
	STRAINER
	CHECK VALVE
SD	SPLITTER DAMPER
	PIPE ANCHOR
	PIPE EXPANSION JOINT
	PIPE GUIDE
T	THERMOSTAT
FLFD	FLEXIBLE DUCT CONNECTION / FUSIBLE LINK FIRE DAMPER
	PRESSURE GAUGE
	THERMOMETER

CONCURRENCE

DATE	CS21	DATE	AB41	DATE	AS01M	DATE	AN21	DATE	AB21
9/14				5/12/65					

D.W. Witton 5-17-65

APPROVED FOR SAFETY — MI

AS BUILT

⚠ VBF 5-145 ADDED 4" PIPING	545-3	KBK	
⚠ VBP N/A 11-67 AS BUILT	CT NO.	APPROVED	F

NATIONAL AERONAUTICS AND SPACE ADMINISTRATION — M S F C — HUNTSVILLE, ALABAMA

SANDERS & THOMAS INC. POTTSTOWN PA. WASH. D.C. MONT. ALA.

EXTENSION OF LOAD TEST ANNEX (BUILDING NO. 4619)

HEATING, VENTILATING & AIR CONDITIONING BASEMENT FLOOR PLAN

NASA AE CONT. NO. NAS8-12014	FILE NO. M S C 9004
DESIGNED W.A. Sanders, P.E. BY DATE 12 MAY 64	APPROVAL RECOMMENDED R.J. Barrett CHIEF DESIGN BRANCH DATE 6-16-64
DESIGN MCM DRAWN AJK TRACED RAS SCALE 1/8"=1'-0"	APPROVED B. Bacon CHIEF MECHANICAL SECTION DATE 6-17-64 SPEC. NO. F&D 423
	DRWG. NO. F&D-C-4619-MI

SA. 4 of 6

4619

MSFC MASTER BID DISK 11-18-2013

NOTICE - WITH A GOVERNMENT AGREEMENT, THE UNITED STATES GOVERNMENT HAS A LIMITED GOVERNMENT PURPOSE LICENSE IN THE COPYRIGHTED MATERIAL IDENTIFIED IN THIS NOTICE AND EXERCISED BY OR ON BEHALF OF THE UNITED STATES GOVERNMENT. THIS LICENSE INCLUDES THE RIGHT TO REPRODUCE THE COPYRIGHTED MATERIAL IDENTIFIED IN THIS NOTICE AND TO PREPARE DERIVATIVE WORKS BASED ON THE COPYRIGHTED MATERIAL IDENTIFIED IN THIS NOTICE FOR GOVERNMENT PURPOSES. THIS LICENSE DOES NOT INCLUDE THE RIGHT TO DISTRIBUTE COPIES OF THE COPYRIGHTED MATERIAL IDENTIFIED IN THIS NOTICE TO THE PUBLIC. THIS LICENSE IS EXERCISED BY OR ON BEHALF OF THE UNITED STATES GOVERNMENT. THIS LICENSE IS NOT EXERCISED BY IMPLICATION OR OTHERWISE IN ANY MANNER. CONFERRING THIS NOTICE ON ANY OTHER PERSON OR CORPORATION DOES NOT CONFER ANY LICENSE RIGHTS OR PERMISSION TO MANUFACTURE, USE, OR SELL ANYTHING THAT IT MAY OR MAY NOT BE RELATED THERETO.

CONCURRENCE

DATE	CS21	DATE	AB41	DATE	AS01M	DATE	AN21	DATE	AB21
5/7/65				5/7/65					

HOT WATER CONVECTORS C-1 FOR PIPING SEE DWG M1

FOR CONVECTORS

ZONE #1 - 20x28 DUCT FROM MECH RM

ZONE #2 - 16x26 DUCT FROM MECH RM

ZONE #3 - 26x26 DUCT FROM MECH RM

ZONE #4 - 18x26 DUCT FROM MECH RM

48x48 RA REG. 7355 CFM

48x36 GRILLE WITH PRESSURE RELIEF DAMPER HIGH IN WALL

CONTINUED ON DWG M1

PITCH PIPES DOWN

DRIP & TRAP

PIPING DOWN TO BSMT CONT ON DWG M3

10x6 EXH REG 140 CFM

12x12 EXH REG 320 CFM

PITCH DN

EXPANSION LOOP IN LP

EXPANSION JOINT IN LPR

PIPES OVERHEAD

6x4 EXH REG 40 CFM

12x12 DUCT UP TO EF-3 ON ROOF

12x24 EXHAUST GRILLE IN CLG

COOLING TOWER

PROVIDE IMPULSE TRAP WITH DISC. TO DRAIN

PROVIDE PIPE COIL IN COOLING TOWER BASIN

THERMOSTATIC CONTROL VALVE

UNIT HEATER

SLOPE UNIT FRONT DOWN 45°

FLEXIBLE CONNECTION

28"x68" WEATHERPROOF LOUVER WITH BIRDSCREEN

OUTSIDE AIR

RA

H/V UNIT #5

FILTERS

ADJUSTABLE VANES

ADJUSTABLE DISCHARGE COWL 3 EACH UNIT

STEAM

CONDENSATE

OUTSIDE AIR INTAKE SEE DETAIL ON DWG M5

AC UNIT #5

INSULATION

AIR TIGHT SUPPLY AIR PLENUM

PERFORATED CLG

SEE DETAIL 1 M2|M2

RA REG

SECTION A M2|M2 SCALE: 1/8"=1'-0"

20x10 FOR AC#5 22x16 FOR AC#6

PERFORATED CEILING

DETAIL 1 M2|M2 SCALE: NONE

REMOVE EXIST. CHW PIPE. REPLACE WITH SIZES INDICATED PER NOTES 5,6,7,9,10, & 12 OF DWG FAC-ST-4619. REMOVED PIPE SHALL BE REUSED WHERE POSSIBLE. SEAL INSULATION INTERFACE WITH EXIST. WITH CONTINUOUS VAPOR BARRIER. 4

EXPANSION LOOP

EXPANSION JOINT

PIPES OVER EXISTING DOOR

3G x 24 BACKDRAFT DAMPER 22'-0" ABOVE FLOOR

3G x 30 TRANSFER GRILLE 22'-0" ABOVE FLOOR

36 x 24 TRANSFER GRILLE 22'-0" ABOVE FLOOR

H & V UNIT #5 12 REQUIRED IN HIGH BAY.

UP TO OUTSIDE AIR INTAKE R3 ON ROOF

30x24 BACKDRAFT DAMP. 22'-0" ABOVE FLOOR

48x24 TRANS. GRILLE 22'-0" ABOVE FLOOR

PIPING DOWN TO BASEMENT CONTINUED ON DWG M1

24x18 RELIEF DAMPER IN DUCT

36x24 RA REG AT CLG 2250 CFM

10 x 36 UP

48x36 RA REG AT CLG 4950 CFM

36x30 RELIEF DAMP. IN DUCT

18x48 UP

24-24 RA REG AT FL 1595 CFM

G-1775 CFM

48"x18" WEATHERPROOF LOUVER WITH BIRDSCREEN

24x24 RA REG AT FL 1600 CFM

DUCTS HIGH IN ROOM

ABOVE CEILING

20x10 DN TO PERFORATED CEILING

22x14 DN TO PERFORATED CEILING

12x12 RA FROM ROOM UP THRU ROOF

12x12 RA FROM ROOM

MUFFLERS

UP THRU ROOF

FROM H&V UNIT #6

12x12 SUPPLY DUCT WITH 3-MUFFLERS IN RISE AS SHOWN FOR RM 111 ON DETAIL B M2|M3

H&V UNIT #6 ON ROOF

12x12 RA U-THRU ROOF

12x12 SUPPLY FROM H&V UNIT #3

24x24 RELIEF DAMPER IN DUCT

AC UNIT #2

24x18 RA REG AT FL 1250 CFM

60"x24" WEATHERPROOF LOUVER WITH BIRDSCREEN

24x18 RA REG AT FL 1250 CFM

36x30 RA REG AT FL 2680 CFM EA

24-24 RA REG AT FL 1685 CFM

72"x24" WEATHERPROOF LOUVER WITH BIRDSCREEN

AC UNIT #3

48"x24" WEATHERPROOF LOUVER WITH BIRDSCREEN

24x24 RA REG AT FL 1690 CFM

60"x24" WEATHERPROOF LOUVER WITH BIRDSCREEN

HOT WATER CONVECTOR C2

30x18 RELIEF DAMPER IN DUCT

12x12 EXH REG 400 CFM

12x12 UP TO EF-3 ON ROOF

AC UNIT #4

12x24 RA REG AT FL 850 CFM

12x24 RA REG AT FL 880 CFM

24x24 RA REG AT FL 1845 CFM

12x12 UP THRU ROOF H&V UNIT #3 ON ROOF

24x24 RA REG AT FL 1845 CFM

48x24 WEATHERPROOF LOUVER WITH BIRDSCREEN

AC UNIT #6

H&V UNIT #2

12x12 EXH REG 310 CFM

12x24 RA REG AT FL 1595 CFM

H&V UNIT #4

FIRST FLOOR PLAN

SCALE: 1/8" = 1'-0"

NOTES:

1. ALL DUCTWORK ABOVE CEILING UNLESS OTHERWISE NOTED.
2. PROVIDE SPLITTER DAMPERS AT ALL DUCT BRANCH TAKE OFFS.
3. DIFFUSERS SHALL BE 18'-0" ABOVE FLOOR IN ROOMS HAVING NO SUSPENDED CEILING.
4. FOR DIFFUSER PANEL LOCATIONS SEE REFLECTED CEILING PLANS
5. PROVIDE TURNING VANES IN ALL SUPPLY DUCT SQUARE ELBOWS.
6. DUCT SIZES ARE CLEAR INSIDE DIMENSION WITH INSULATION LINER IN PLACE.
7. SEE NOTES ON DWG NO. M1

REV	BY	DATE	
2	VBF	5-16-65	ADDED 3" & 4" PIPING
1	VBP	4-6-65	AS BUILT

545-3

D.W. Sutton 5-17-65

NATIONAL AERONAUTICS AND SPACE ADMINISTRATION — M S F C — HUNTSVILLE, ALABAMA

SANDERS & THOMAS INC. POTTSTOWN PA. WASH. D.C. MONT. ALA.

EXTENSION OF LOAD TEST ANNEX (BUILDING NO. 4619)

HEATING, VENTILATING & AIR CONDITIONING FIRST FLOOR PLAN

NASA AE CONT. NO. NAS8-12014

M.S.F.C. IDENT NO. 9005

DESIGNED BY: FCY, GRP, RAG	APPROVED RECOMMENDED: R.F. Harnett	APPROVED: Stuart D. Ramsey, CHIEF DIV. OR BRANCH	
DRAWN: UNKNOWN	CHECKED: W.A. Sanders, P.E.	DATE: 12 MAY 64	LTR. DATE: 6/15/64
APPROVED RECOMMENDED: R. Bain, CHIEF MECHANICAL SECTION	DESIGN DATE: 6-7-64	SPEC. NO. F&D 433	NASA DATE: 6-16-64
SCALE: 1/8"=1'-0"			DRWG. NO. F&D-C-4619-M2

APPROVED FOR SAFETY — DATE

M2

Sheet 4 of 4

4619

MSFC MASTER BID DISK 11-18-2013

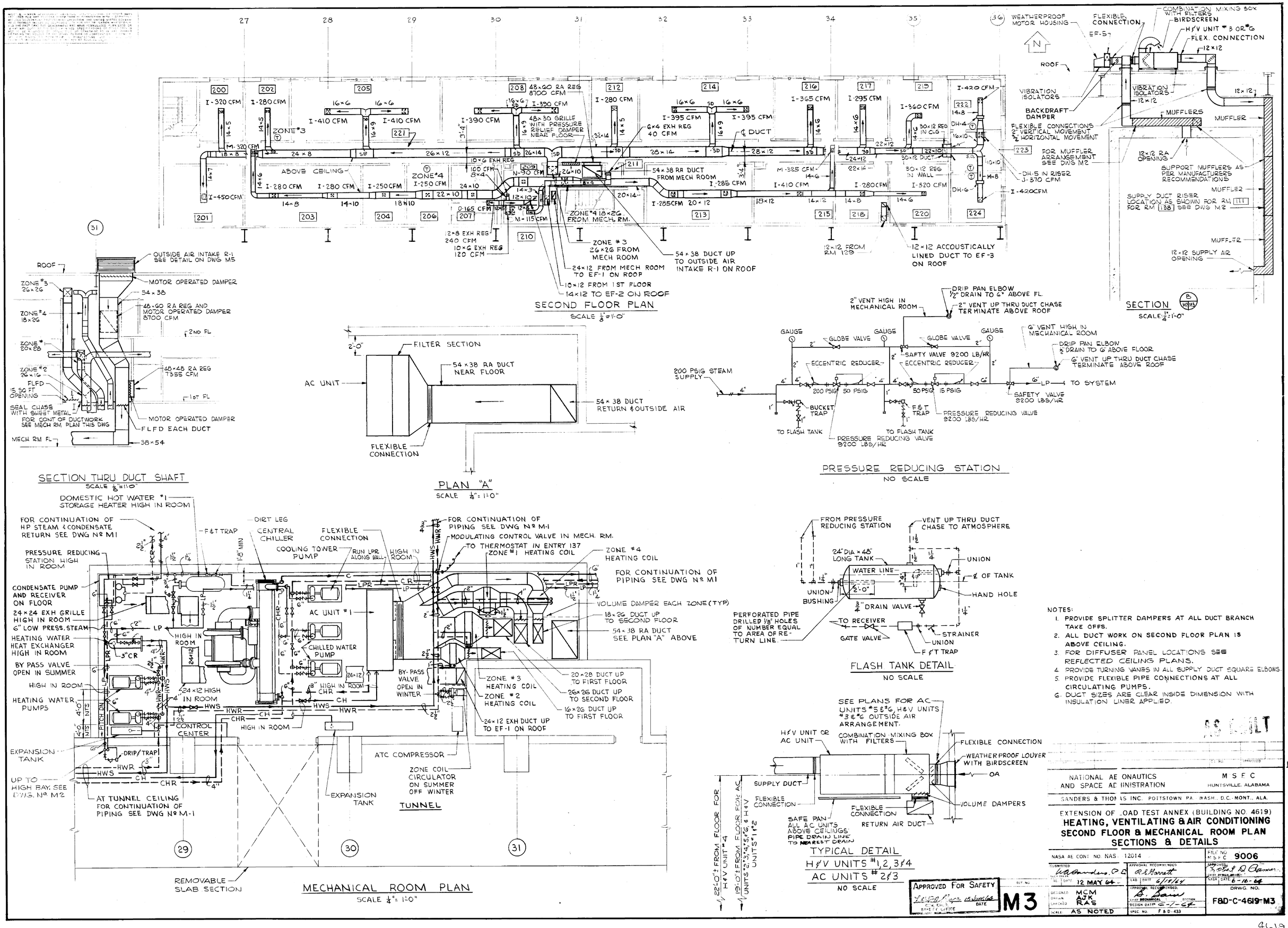

MSFC MASTER BID DISK 11-18-2013

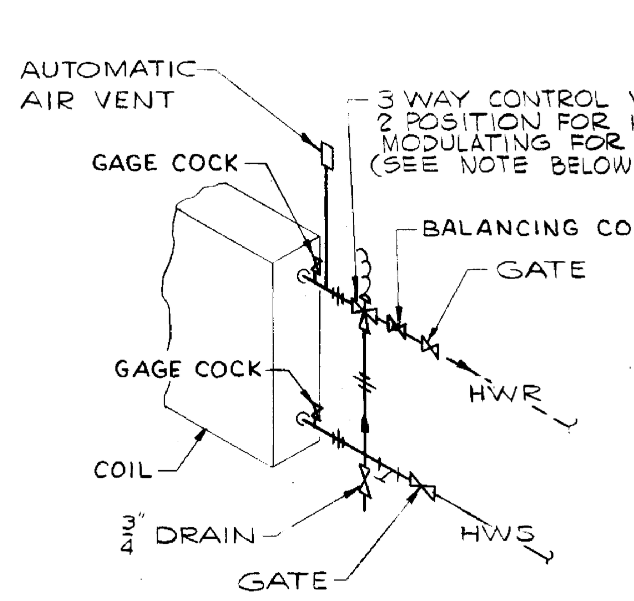

HOT WATER HEATING COIL HOOKUP

NO SCALE

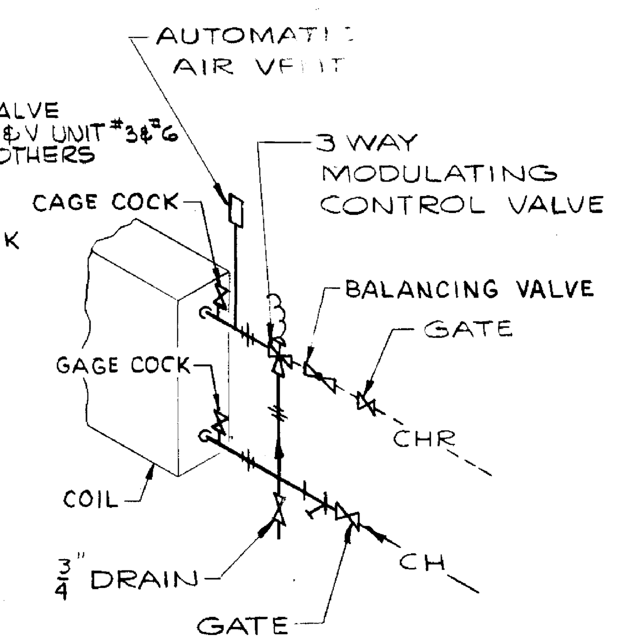

COOLING COIL HOOKUP

NO SCALE

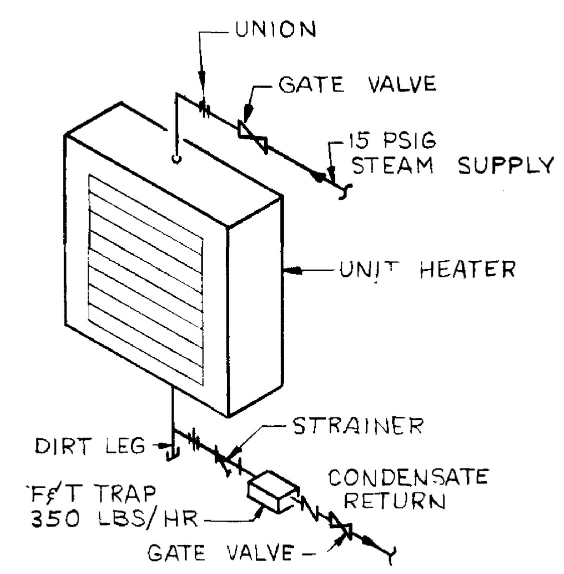

UNIT HEATER

NO SCALE

NOTE:
3 WAY CONTROL VALVE FOR H & V UNITS #3 & #6 SHALL BE INSTALLED BELOW THE ROOF

AIR CONDITIONING UNIT SCHEDULE															
REF NO.	FAN SECTION				COOLING COIL					HEATING COIL				MIN OA	COOLING COIL FACE VELOCITY FPM
	CFM	MAX O.V.	ESP IN H_2O	HP	ENT AIR DB	ENT AIR WB	LVG AIR DB	LVG AIR WB	GPM	ENT AIR °F	LVG AIR °F	MBH	GPM		
AC-1	18,255	1830	1.50	15	77.4	64.4	55.5	53.7	118.5	—	—	—	—	2200	550
AC-2	2,780	1520	.50	1	77.0	64.2	57.2	55.4	15.2	68.5	95.0	80	8.0	280	↓
AC-3	5,950	1450	.50	2	77.0	64.2	57.3	55.3	32.7	68.5	85.0	106	10.6	600	↓
AC-4	2,400	1300	.50	1	80.6	67.4	56.3	54.3	20.0	56.9	85.0	73	7.3	670	↓
AC-5	2,500	1360	.50	1	77.0	64.2	57.5	55.6	13.5	68.5	80.0	31	3.1	250	↓
AC-6	5,500	1650	.50	2	77.0	64.2	57.5	55.7	29.7	68.5	80.0	69	6.9	550	↓
AC-7	11,600	1400	.50	5	77.0	64.2	57.6	55.8	61.6	68.5	80.0	144	14.4	1160	↓

NOTES:
1. COOLING CAPACITIES ARE BASED ON WATER ENTERING AT 45°F AND LEAVING AT 55°F.
2. HEATING CAPACITIES ARE BASED ON WATER ENTERING AT 200°F AND LEAVING AT 180°F.

EQUIPMENT SCHEDULE

CENTRIFUGAL WATER CHILLER
145 TONS CAPACITY WHEN COOLING 350 GPM WATER FROM 55°F TO 45°F WITH 435 GPM CONDENSING WATER ENTERING AT 85°F AND LEAVING AT 95°F. EVAPORATOR PRESSURE DROP = 20 FT HEAD. CONDENSER PRESSURE DROP = 20 FT HEAD. EVAPORATOR FOULING FACTOR = .0005, CONDENSER FOULING FACTOR = .0005 125 KW MOTOR.

COOLING TOWER
145 TONS CAPACITY WHEN COOLING 435 GPM WATER FROM 95°F TO 85°F WITH OUTDOOR TEMPERATURE AT 78° WB, 7½ HP FAN MOTOR, 8 FEET PUMPING HEAD.

CHILLED WATER PUMPS (TWO REQUIRED)
CENTRIFUGAL PUMP WITH 350 GPM CAPACITY AT 114 FT HEAD, 15 HP MOTOR, 1750 RPM.

COOLING TOWER PUMP
CENTRIFUGAL PUMP WITH 450 GPM CAPACITY AT 79 FT HEAD, 15 HP MOTOR, 1750 RPM.

HEATING WATER PUMPS (TWO REQUIRED)
CENTRIFUGAL PUMP WITH 185 GPM CAPACITY AT 101 FT HEAD, 10 HP MOTOR, 1750 RPM.

HEAT EXCHANGER
CAPACITY TO HEAT 185 GPM WATER FROM 180°F TO 200°F WITH STEAM AT 15 PSIG. PRESSURE DROP = 2.6 FT HEAD

CONDENSATE PUMP & RECEIVER
DUPLEX UNIT WITH ALTERNATOR. CAPACITY TO PUMP 60 GPM AGAINST 50 PSI HEAD. 3 HP, 1750 RPM. 60 GAL RECEIVER CAPACITY.

ZONE COIL CIRCULATOR
CENTRIFUGAL PUMP WITH 73 GPM CAPACITY AT 31 FT HEAD 3/4 HP MOTOR, 1750 RPM.

UNIT HEATERS (TWO REQUIRED)
113,760 BTU/HR CAPACITY WITH STEAM AT 15 PSIG 1500 CFM, 40 FT THROW, 1/8 HP MOTOR.

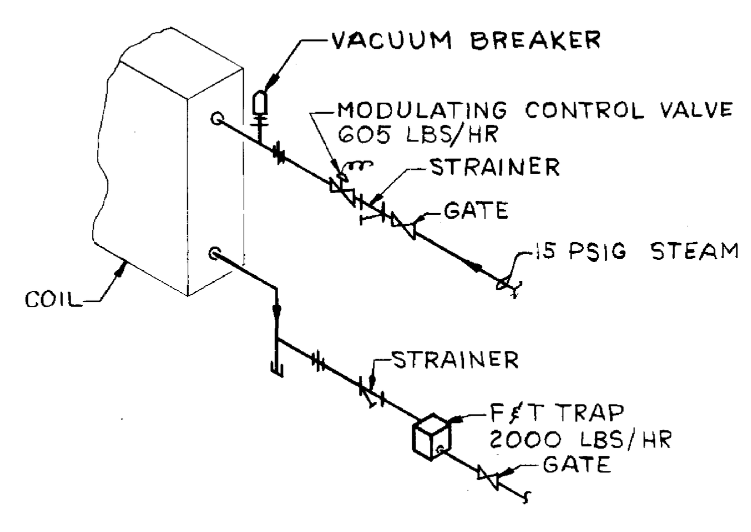

H&V UNIT #5 STEAM HEATING COIL HOOKUP

NO SCALE

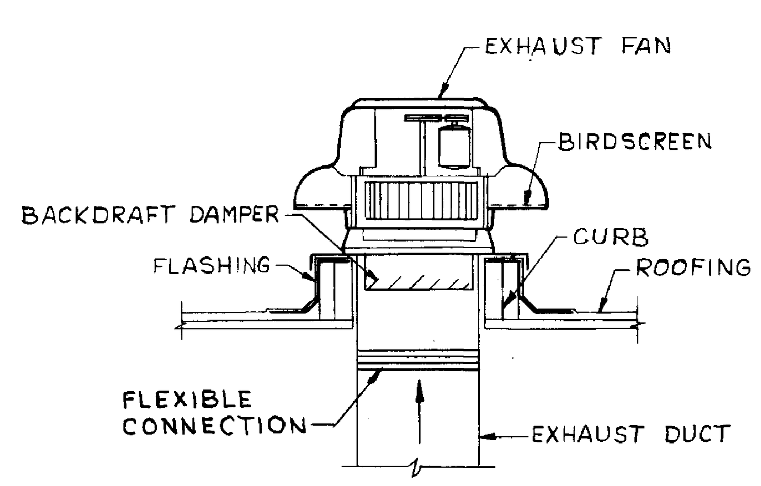

TYPICAL ROOF TYPE EXHAUST FAN

NO SCALE

HEATING & VENTILATING UNIT SCHEDULE											
REF NO.	FAN SECTION				HEATING COIL					MIN OA	COIL FACE VELOCITY FPM
	CFM	MAX O.V.	ESP IN H_2O	HP	ENT AIR °F	LVG AIR °F	MBH	GPM	STEAM LBS/HR		
HV-1	3750	1360	.50	2	68.5	105.0	148	14.8	—	375	550
HV-2	4100	1450	.50	2	68.5	105.0	162	16.2	—	410	745
HV-3	500	500	1.25	3/4	10.0	85.0	41	7.0	—	80	285
HV-4	3550	1300	.50	1½	68.5	105.0	140	14.0	—	355	645
*HV-5	22600	2900	.50	10	58.7	83.0	605	—	605	5665	800
HV-6	500	500	1.25	3/4	10.0	85.0	41	7.0	—	80	285

* 12 REQUIRED

NOTES:
1. WATER COIL CAPACITIES ARE BASED ON WATER ENTERING AT 200°F AND LEAVING AT 180°F EXCEPT AS NOTED.
2. STEAM COIL CAPACITIES ARE BASED ON STEAM AT 15 PSIG.
3. HEATING COIL IN HV-5 SHALL BE NON-FREEZE TYPE.
4. HV-3 & HV-6 COIL CAPACITIES ARE BASED ON WATER ENTERING AT 200°F AND LEAVING AT 188°F.

DIFFUSER SCHEDULE		
SYMBOL	SIZE	PATTERN
A	18×24	4-WAY
B	12×24	3-WAY
C	9×21	4-WAY
D	15×9	4-WAY
E	9×9	4-WAY
F	15×18	4-WAY
G	24×24	4-WAY
H	10×10	4-WAY
I	12×12	4-WAY
J	12×12	3-WAY
K	10×10	3-WAY
L	18×6	1-WAY
M	12×12	2-WAY
N	6×6	4-WAY
O	8×8	4-WAY
P	18×6	2-WAY

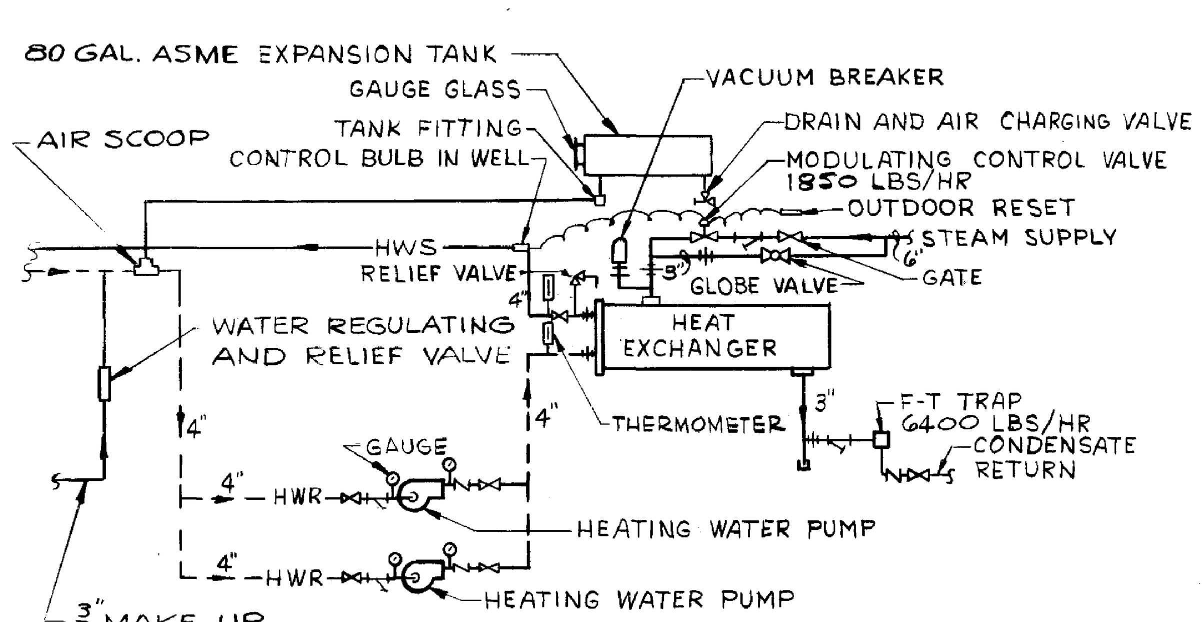

HEAT EXCHANGER SCHEMATIC

NO SCALE

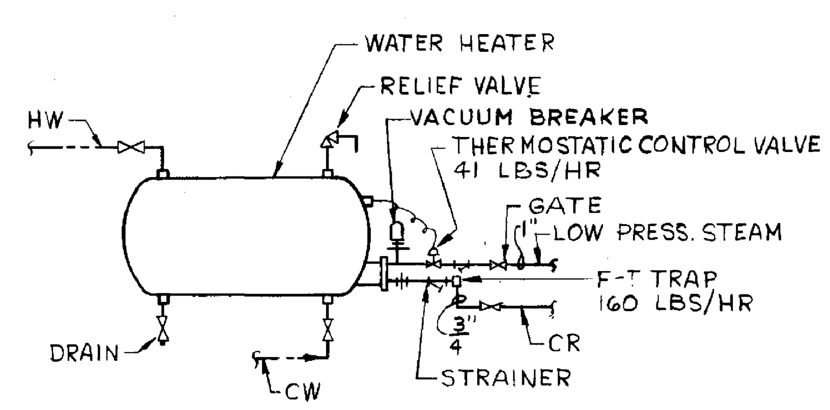

STEAM HOOKUP DOMESTIC WATER HEATER #1

NO SCALE

EXHAUST FAN SCHEDULE							
SYM	CFM	SP	MOTOR	RPM	QUAN	DRIVE	TYPE
EF-1	2200	3/8"	1/3 HP	675	1	BELT	ROOF
EF-2	1090	1/4"	1/6 HP	945	1	BELT	ROOF
EF-3	710	1/4"	1/8 HP	760	2	BELT	ROOF
EF-4	3800	3/8"	1 HP	870	2	BELT	BLOWER
EF-5	500	5/8"	1/6 HP	1030	2	BELT	BLOWER

NOTES:
1. ROOF TYPE TO BE EQUIPPED WITH BIRD SCREEN & BACKDRAFT DAMPERS ACCOUSTICAL CURB.
2. MOUNT EF-4 & EF-5 ON VIBRATION ISOLATORS.
3. PROVIDE SCREEN OVER INLET AND EXHAUST OF EF-4.

ELECTRIC DUCT HEATER SCHEDULE							
REF NO.	ROOM NO.	DUCT SIZE W	DUCT SIZE D	BTU/HR	TEMP RISE	CFM	CIRCUITS
DH-1	133	12	12	6130	8°	710	3
DH-2	134	12	10	5920	9°	610	3
DH-3	125	14	8	4560	6°	635	3
DH-4	222	12	8	3370	6°	520	3
DH-5	223	12	12	3200	8°	370	3
DH-6	224	12	8	3700	7°	490	3

OUTSIDE AIR INTAKE SCHEDULE			
REF	CFM	SP DROP IN H_2O	TYPE
R-1	18,255	.10	ROOF
R-2	2,500	.10	ROOF
R-3	5,500	.10	ROOF

CONVECTOR SCHEDULE						
SYMBOL	OPENING SIZE L	OPENING SIZE H	OPENING SIZE D	RECESS	MBH	QUAN
C-1	48	38	4	3½	5.7	2
C-2	56	38	6	3½	9.9	1

NOTES:
1. CAPACITIES ARE BASED ON WATER ENTERING AT 200°F AND LEAVING AT 180°F.

ZONE HEATING COIL SCHEDULE						
REF	CFM	COIL FACE VEL	ENT AIR °F	LVG AIR °F	MBH	GPM
ZONE #1	5120	675	55°	99.5°	250	25.0
ZONE #2	3300	600	55°	81.0°	93	9.3
ZONE #3	6180	590	55°	98.0°	290	29.0
ZONE #4	3655	575	55°	81.0°	101	10.1

NOTES:
1. COIL CAPACITIES ARE BASED ON WATER ENTERING AT 200°F AND LEAVING AT 180°F.

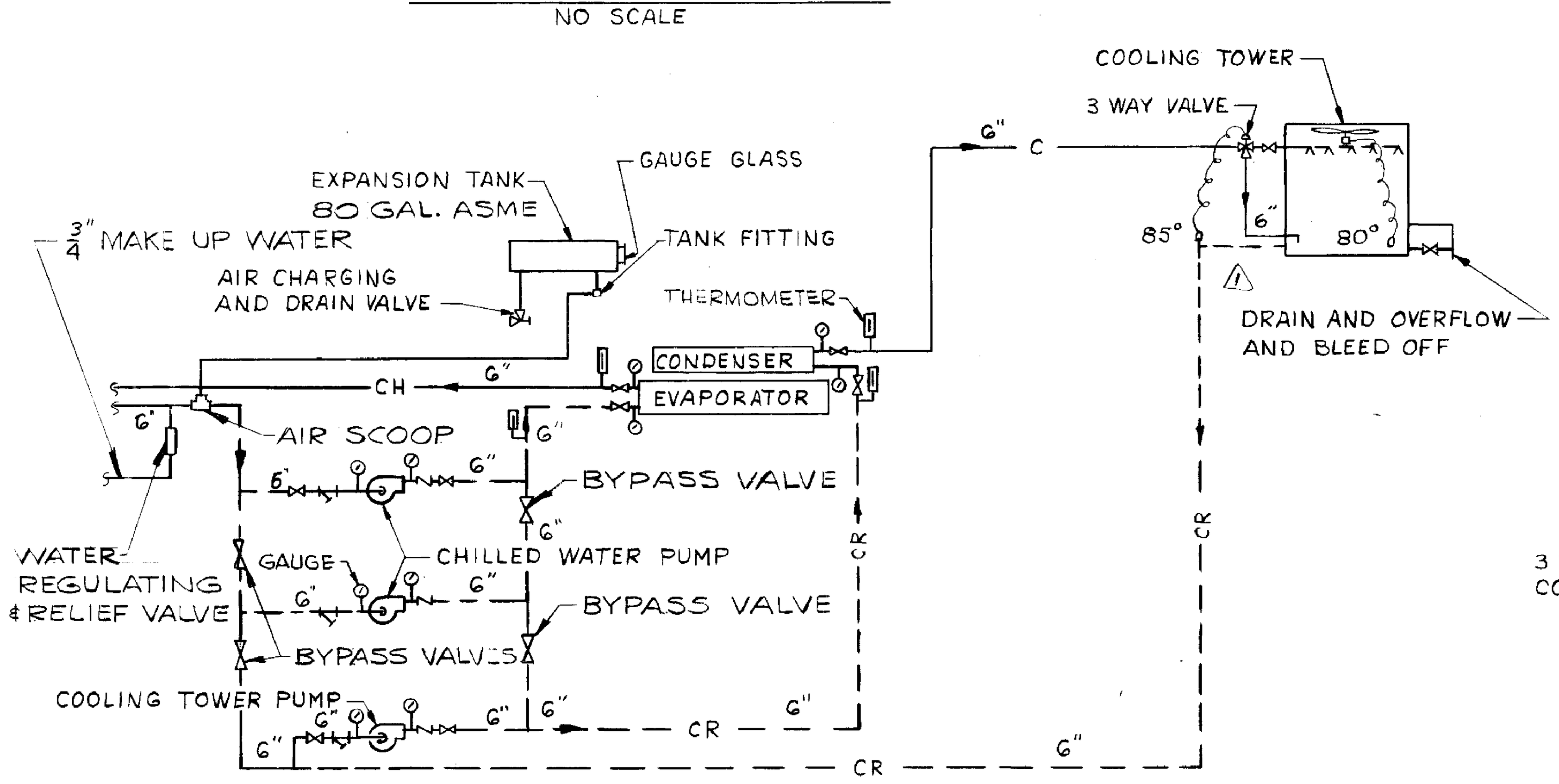

REFRIGERATION SYSTEM PIPING SCHEMATIC

NO SCALE

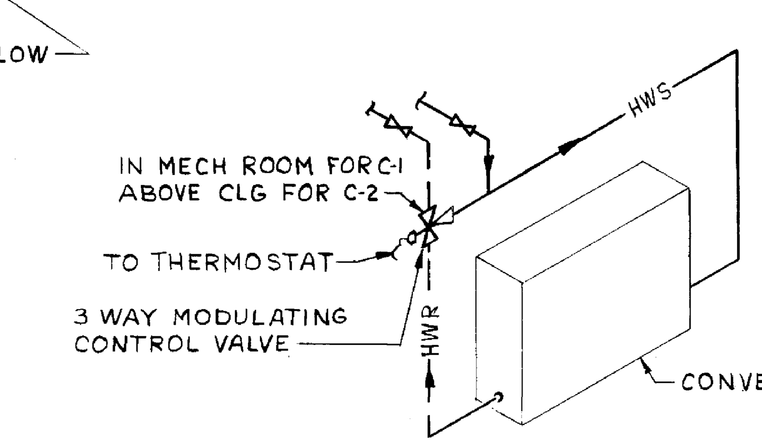

HOT WATER CONVECTOR HOOKUP

NO SCALE

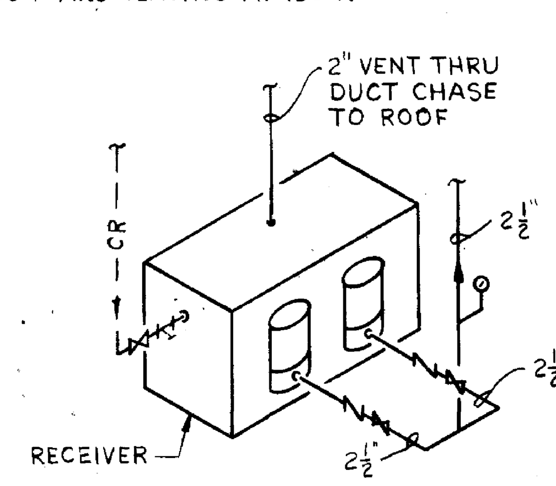

CONDENSATE PUMP & RECEIVER

NO SCALE

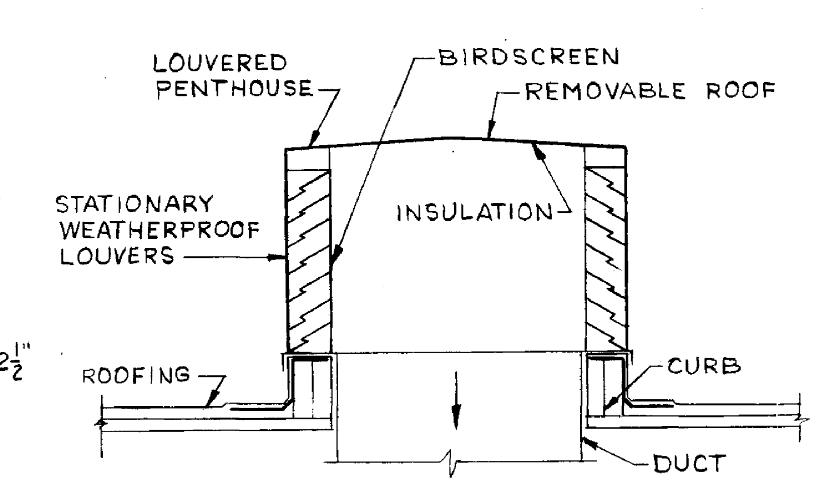

OUTSIDE AIR INTAKE

NO SCALE

APPROVED FOR SAFETY
[signature] 15 June 64
GEN. ENGR. SAFETY OFFICE DATE

M4

REV	BY	DATE			APPROVED
1	10	4/22/66	REVISED PIPING	12072-12	JJA

NATIONAL AERONAUTICS AND SPACE ADMINISTRATION — MSFC HUNTSVILLE, ALABAMA

SANDERS & THOMAS INC. POTTSTOWN PA.-WASH. D.C. MONT., ALA.

EXTENSION OF LOAD TEST ANNEX (BUILDING NO. 4619)

HEATING, VENTILATING & AIR CONDITIONING

SCHEDULES & DETAILS

NASA AE CONT. NO NAS 8-12014 — FILE NO MSFC 9007

SUBMITTED: [signature] P.E. AE DATE: 12 MAY 64 — APPROVAL RECOMMENDED: R.S. Garrett LAB DATE: 6/15/64 — APPROVED: Robert D. Ramsay CHIEF DESIGN BRANCH NASA DATE: 6-16-64

DESIGNED MCM — DRAWN BLB — CHECKED RAS — SCALE NO SCALE

APPROVAL RECOMMENDED: B. Bain CHIEF MECHANICAL SECTION — DESIGN DATE: 6-1-64 — SPEC NO. F & D-433

DRWG. NO. F&D-C-4619-M4

4619

MSFC MASTER BID DISK 11-18-2013

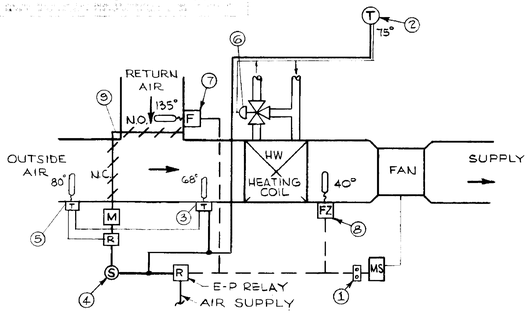

HEATING AND VENTILATING UNITS No. 1,2,4

NO SCALE

HEATING AND VENTILATING UNITS No. 1,2,4

1. MANUALLY STARTING THE FAN ENERGIZES THE AUTOMATIC CONTROL SYSTEM THRU ELECTRIC-PNEUMATIC RELAY.
2. SPACE THERMOSTAT MODULATES HEATING COIL VALVE TO MAINTAIN SPACE TEMPERATURE.
3. MIXED AIR TEMPERATURE CONTROLLER MODULATES OUTSIDE AIR DAMPER AND RETURN AIR DAMPER TO MAINTAIN CONSTANT MIXED AIR TEMPERATURE.
4. MANUALLY ADJUSTABLE MINIMUM DAMPER POSITION SWITCH.
5. OUTSIDE AIR BULB RETURNS DAMPERS TO THE MINIMUM POSITION WHEN THE PREDETERMINED SETTING IS REACHED.
6. HEATING COIL VALVE OPENS ON FAN SHUTDOWN.
7. FIRESTAT SHUTS DOWN FAN ON EXCESSIVE HIGH TEMPERATURE.
8. FREEZESTAT SHUTS DOWN FAN ON EXCESSIVE LOW TEMPERATURE.
9. OUTSIDE AIR DAMPER CLOSES AND RETURN AIR DAMPER OPENS ON FAN SHUTDOWN.

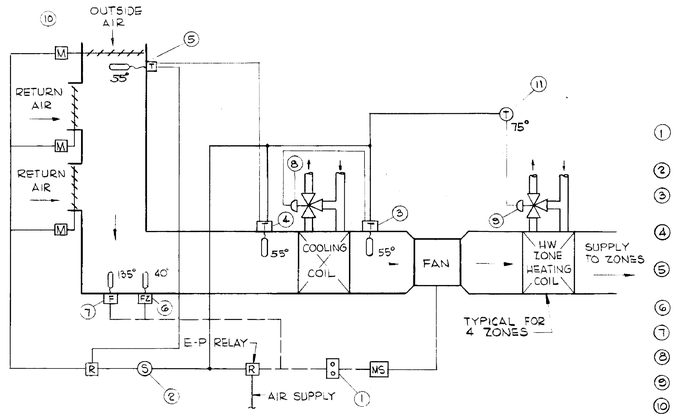

AIR CONDITIONING UNIT NO. 1

NO SCALE

AIR CONDITIONING UNIT NO. 1

1. MANUALLY STARTING THE FAN ENERGIZES THE AUTOMATIC CONTROL SYSTEM THRU ELECTRIC-PNEUMATIC RELAY.
2. MANUALLY ADJUSTABLE MINIMUM DAMPER POSITION SWITCH.
3. DISCHARGE TEMPERATURE CONTROLLER MODULATES COOLING COIL VALVE TO MAINTAIN COIL DISCHARGE TEMPERATURE.
4. MIXED AIR TEMPERATURE CONTROLLER MODULATES OA & RA DAMPERTO MAINTAIN CONSTANT MIKED AIR TEMPERATURE.
5. OUTSIDE AIR BULB RETURNS DAMPERS TO THE MINIMUM POSITION WHEN PREDETERMIND SETTING IS REACHED.
6. FREEZESTAT SHUTS DOWN FAN ON EXCESSIVE LOW TEMPERATURE.
7. FIRESTAT SHUTS DOWN FAN ON EXCESSIVE HIGH TEMPERATURE.
8. COOLING COIL VALVE CLOSES ON FAN SHUTDOWN.
9. HEATING COIL VALVE OPENS ON FAN SHUTDOWN.
10. OUTSIDE AIR DAMPER CLOSES AND RETURN AIR DAMPERS OPEN ON FAN SHUTDOWN.
11. SPACE THERMOSTAT MODULATES ZONE HEATING COIL VALVE TO MAINTAIN SPACE TEMPERATURE IN SUMMER AND WINTER.

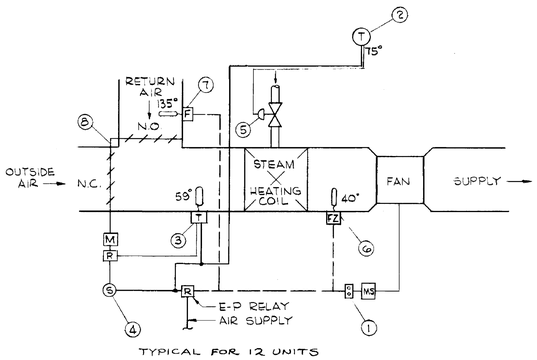

TYPICAL FOR 12 UNITS

HEATING AND VENTILATING UNIT NO. 5

NO SCALE

HEATING AND VENTILATING UNIT NO. 5

1. MANUALLY STARTING THE FAN ENERGIZES THE AUTOMATIC CONTROL SYSTEM THRU ELECTRIC-PNEUMATIC RELAY.
2. SPACE THERMOSTAT MODULATES HEATING COIL VALVE TO MAINTAIN SPACE TEMPERATURE.
3. MIXED AIR TEMPERATURE CONTROLLER MODULATES OUTSIDE AIR AND RETURN AIR DAMPER TO MAINTAIN CONSTANT MIXED AIR TEMPERATURE.
4. MANUALLY ADJUSTABLE MINIMUM DAMPER POSITION SWITCH.
5. HEATING COIL VALVE OPENS ON FAN SHUTDOWN.
6. FREEZESTAT SHUTS DOWN FAN ON EXCESSIVE LOW TEMPERATURE.
7. FIRESTAT SHUTS DOWN FAN ON EXCESSIVE HIGH TEMPERATURE.
8. OUTSIDE AIR DAMPER CLOSES AND RETURN AIR DAMPER OPENS ON FAN SHUTDOWN.

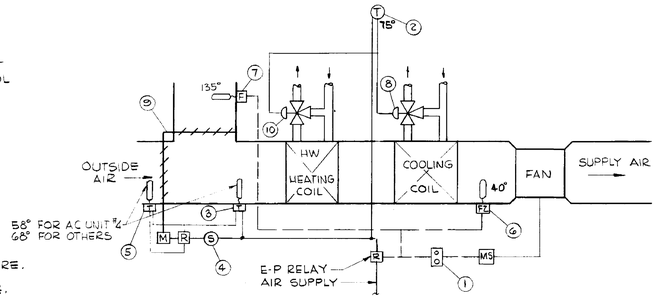

AIR CONDITIONING UNIT NO. 2,3,4,5,6 & 7

NO SCALE

AIR CONDITIONING UNIT NO. 2,3,4,5,6 & 7

1. MANUALLY STARTING THE FAN ENERGIZES THE AUTOMATIC CONTROL SYSTEM THRU ELECTRIC-PNEUMATIC RELAY.
2. WHEN THE SPACE TEMPERATURE IS BELOW THE THERMOSTAT SETTING THE HEATING COIL VALVE SHALL MODULATE TO MAINTAIN SPACE TEMPERATURE. WHEN THE SPACE TEMPERATURE IS ABOVE THE THERMOSTAT SETTING THE COOLING COIL VALVE SHALL MODULATE TO MAINTAIN SPACE TEMPERATURE.
3. MIXED AIR TEMPERATURE CONTROLLER MODULATES OUTSIDE AIR AND RETURN AIR DAMPERS TO MAINTAIN CONSTANT MIXED AIR TEMPERATURE.
4. MANUALLY ADJUSTABLE MINIMUM DAMPER POSITION SWITCH.
5. OUTSIDE AIR BULB RETURNS DAMPERS TO THE MINIMUM POSITION WHEN PREDETERMINED SETTING IS REACHED.
6. FREEZESTAT SHUTS DOWN FAN ON EXCESSIVE LOW TEMPERATURE.
7. FIRESTAT SHUTS DOWN FAN ON EXCESSIVE HIGH TEMPERATURE.
8. COOLING COIL VALVE CLOSES ON FAN SHUTDOWN.
9. OUTSIDE AIR DAMPER CLOSES AND RETURN AIR DAMPERS OPEN ON FAN SHUTDOWN.
10. HEATING COIL VALVE OPENS ON FAN SHUTDOWN.

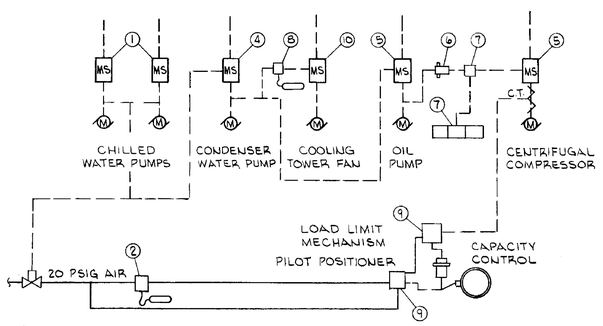

REFRIGERATION SYSTEM CONTROL SCHEMATIC

NO SCALE

REFRIGERATION SYSTEM

1. MANUALLY STARTING THE CHILLED WATER PUMPS ENERGIZES THE AUTOMATIC CONTROL SYSTEM.
2. TEMPERATURE CONTROLLER IN LEAVING CHILLED WATER ON COOLING DEMAND WILL OPERATE PNEUMATIC-ELECTRIC RELAY THUS ACTIVATING SEQUENCE FOR CHILLER.
3. CHILLED WATER PUMP STARTS CONDENSER WATER PUMP THRU ELECTRIC INTERLOCK.
4. CONDENSER WATER PUMP IS INTERLOCKED TO START COOLING TOWER FAN AND ENERGIZE CIRCUITS TO REFRIGERATION MACHINE.
5. LUBRICATING OIL PUMP THROUGH OIL PRESSURE CONTROL ALLOWS COMPRESSOR TO START WHEN PRESSURE IS NORMAL.
6. OIL PRESSURE CONTROL STOPS COMPRESSOR MOTOR ON A DROP IN LUBRICATING OIL PRESSURE.
7. LOCKOUT RELAY IS NORMALLY IN A CLOSED POSITION EXCEPT FOR POWER FAILURE OR OPERATION OF PROTECTIVE DEVICES; LOW TEMPERATURE CONTROL, HIGH PRESSURE CONTROL, MOTOR TEMPERATURE CONTROL.
8. TEMPERATURE CONTROLLER ALLOWS COOLING TOWER FAN TO OPERATE ONLY WHEN CONDENSER WATER PUMP IS IN OPERATION AND BASIN WATER IS ABOVE PREDETERMINED SETTING. (80°F.)
9. PILOT POSITIONER AND LOAD LIMIT MECHANISM SHALL MODULATE CAPACITY OF THE CHILLER.
10. A TIME DELAY RELAY SHALL CAUSE CONDENSER WATER PUMP TO CONTINUE OPERATING FOR A PREDETERMINED PERIOD OF TIME AFTER SHUT DOWN OF REFRIGERATION COMPRESSOR.

HEATING AND VENTILATING UNITS NO. 3 & 6

1. MANUALLY STARTING THE FAN ENERGIZES THE AUTOMATIC CONTROL SYSTEM THRU ELECTRIC-PNEUMATIC RELAY.
2. SPACE THERMOSTAT MODULATES FACE AND BYPASS DAMPERS TO MAINTAIN SPACE TEMPERATURE.
3. MANUAL EXHAUST FAN SWITCH OPENS OUTSIDE DAMPER AND CLOSES RETURN AIR DAMPER WHEN EXHAUST FAN IS STARTED.
4. RETURN AIR BULB CLOSES HEATING COIL VALVE WHEN PREDETERMINED SETTING IS REACHED.
5. OUTSIDE AIR BULB OVERRIDES RETURN AIR BULB AND MAINTAINS HEATING COIL VALVE OPEN WHEN OUTSIDE AIR TEMPERATURE IS BELOW SETTING.
6. MANUALLY ADJUSTABLE MINIMUM DAMPER POSITION SWITCH.
7. FREEZESTAT SHUTS DOWN FAN ON EXCESSIVE LOW TEMPERATURE.
8. FIRESTAT SHUTS DOWN FAN ON EXCESSIVE HIGH TEMPERATURE.
9. HEATING COIL VALVE OPENS ON FAN SHUTDOWN
10. OUTSIDE AIR DAMPER CLOSES AND RETURN AIR OPENS ON FAN SHUTDOWN.
11. FLOW SWITCH CLOSES OUTSIDE AIR DAMPER AND OPENS RETURN AIR DAMPER WHEN HEATING WATER FLOW CEASES.

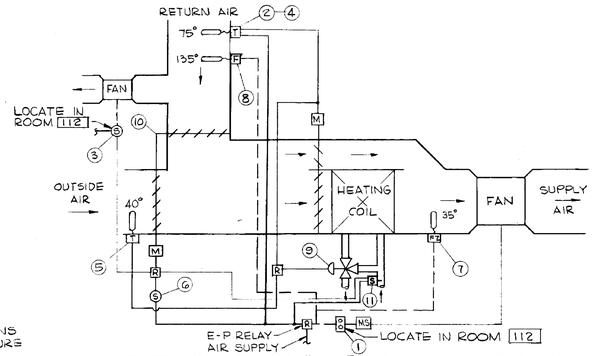

HEATING AND VENTILATING UNITS NO. 3 & 6

NATIONAL AERONAUTICS AND SPACE ADMINISTRATION — M S F C — HUNTSVILLE ALABAMA

SANDER & THOMAS INC. POTTSTOWN PA. WASH. D.C. MONT. ALA.

EXTENSION OF LOAD TEST ANNEX (BUILDING NO. 4619)

HEATING, VENTILATING & AIR CONDITIONING CONTROL SCHEMATICS

NASA-AE CONT.	NAS 8-12014	FILE NO. M S F C	9008
DRAWN	DATE 12 MAY 64	APPROVAL RECOMMENDED	APPROVED
DESIGNED RAS	CHECKED MCM	LAB DATE 6/15/64	NASA DATE 6-16-64
TRACED LS	CHECKED NONE	APPROVAL RECOMMENDED DESIGN DATE 6-1-64	DRWG. NO. F&D-C-4619-M5
		CHIEF MECHANICAL DESIGN BRANCH	
		DRWG. NO. F & D-433	

APPROVED FOR SAFETY — GEN. ENGR. SAFETY OFFICE — DATE 15 June 64

M5

4619

MSFC MASTER BID DISK 11-18-2013

ANY HOLDER OF THIS CONSTRUCTION DRAWING, SPECIFICATIONS OR OTHER DATA IS USED FOR ANY PURPOSE OTHER THAN IN CONNECTION WITH A GOVERNMENT RELATED GOVERNMENT PROCUREMENT OPERATION THE UNITED STATES GOVERNMENT AND THE FACT THAT THE GOVERNMENT MAY HAVE FORMULATED, FURNISHED OR IN ANY WAY SUPPLIED THE SAID DRAWINGS, SPECIFICATIONS OR OTHER DATA IS NOT TO BE REGARDED BY IMPLICATION OR OTHERWISE AS IN ANY MANNER LICENSING THE HOLDER OR ANY OTHER PERSON OR CORPORATION, OR CONVEYING ANY RIGHTS OR PERMISSION TO MANUFACTURE, USE OR SELL ANY PATENTED INVENTION THAT MAY IN ANY WAY BE RELATED THERETO.

(27) (28) (29) (30) (31) (32) (33) (34) (35) (36)

CONT. ON DWG. C1

3/4"CW UP TO NON-FREEZE WALL HYDRANT IN EXTERIOR WALL ABOVE GRADE

4" INDUSTRIAL WATER

REMOVE EXST. SPARE STARTERS & INSTALL NEW SAFETY SW. ON EXST. CONDUIT RISER SW. TO BE 3P-480VAC, 30A, NON-FUSIBLE, SQ.-D NO. HU361, NEMA 1.

3-#12, 1-#12 G. IN 3/4" FLEX. C. BELOW FIRST FL

DOMESTIC WATER HEATER NO.1

PITCH DN

NEW DOMESTIC WATER HEATER (SUMMER) NO. 3

CONT ON DWG P3

(LOCATE WTR. HTR. TO MISS DOOR SWING ON RMU PANEL)

LIGHT IN MECH RM

FLOOR EL 570'-3"

4" FD

01

CO

BELOW FIRST FLOOR

IN EXST. MCC-2 REPLACE EXST. 15A. FUSES W/ 3-20A. FUSES IN COMPARTMENT B5.

FOR CONT SEE DWG P3

FOR CONT. SEE DWG. P3

INV. EL. 568.44'

1/2"CW UP TO 1ST FLR

1/2" HW & CW DN TO HOSE BIBBS

AT TUNNEL CEILING BELOW FLOOR

C.W.

I.W.

CO

4" FD

FLOOR EL. 570'-3"

6" PITCH

REMOVABLE SLAB ABOVE ACCESS SPACE - KEEP CLEAR

6" PITCH DOWN

INV. ELEV. 569.0'-

FOR CONN SEE DWG P2

INVERT EL. 579.75 TYPICAL 3 PLACES

3/4" DRAIN FROM LOW POINT TERMINATE 4" ABOVE TUNNEL DRAIN TRENCH GATE VALVE IN RISER TYPICAL 3 PLACES

INVERT LOW POINT = 576.90' TYPICAL 3 PLACES

INV. EL. 569.0'

FOR CONN SEE DWG P2

HOLD TIGHT AGAINST WALL

SUMP PUMP NO.1 - DISC INTO TOP OF 4" LINE

1/2" I.W. DOWN IN RM. BELOW TUNNEL TERMINATE 3" ABOVE FL WITH 1/2" GATE VALVE.

3/4" SCH 40 BLK STL. PIPE FOR FUTURE 100 PSI AIR. CAP IN TUNNEL AND RUN TO RM. BELOW TUNNEL. TERMINATE 3' ABOVE FLOOR WITH 3/4" 150# GATE VA.

SEE DETAIL 1/P1P1

CAP

4" UP TO HIGH-BAY AREA FLOOR DRAINS

INVERT AT ELBOW 577.50

INVERT AT ELBOW 577.80'

UP TO PIT IN HIGH BAY FLOOR TYPICAL THREE PLACES

PITCH DN

INVERT AT ELBOW 577.50'

4" FD

BELOW FLOOR

PIPE AT TUNNEL CEILING

RISER UP TO FIRST FLOOR. SEE SHT. P-2 FOR CONTINUATION

2-#12 THW, 1-#12 THW (GHC) IN 3/4" C. CONNECT IN SERIES WITH CONTROL XFMR. SEC. AT FUSE BLOCK INSIDE CABINET

EXIST'G. SUMP PUMPS STARTER

EXIST'G. GRATING OVERHEAD

3

ELECTRICAL BOX SEE SHEET E-7

4" UP TO 1ST FLOOR DRAIN TRENCH (6 PLACES)

INV. EL. 568.5'

SUMP PIT

GATE & CHECK VALVES IN DISCHARGE

HIGH IN TUNNEL

06

PITCH DOWN

INV. EL. 569.0'

INV. EL. 567.94'

1" DRAIN TO PIT

BOTTOM OF PIT EL. 563.00'

SECURE COVER TO GRATING

BILGE PUMP NO.2 INV. EL 564.66

BILGE PUMP DISCHARGE

ABOVE CEILING

1/2" UP TO P.S

CAP 36" ABOVE FL

FLOOR EL. 570'-3"

BELOW FL

3/4" UP

4" FROM FLOOR DRAIN

SEE DETAIL TYP 6 PLACES 1/P1P1

FOR CONN SEE DWG NO P2

D.8

AIR SPRING SYSTEM COMPRESSOR ON FL

INV. EL 567.66'

SPILLAGE PREVENTION (SEE DETAIL SHEET FE-C-4619-P1) (CHANGE 8)

BELOW FIRST FLOOR

RAMP DN.

ABOVE CEILING

BELOW FIRST FL

TO STREET WATER MAIN - SEE DWG C1

CONTINUED ON DWG P2

INV EL 572.35'

BELOW FLOOR

04

FLOOR EL. 567'-0"

CONT ON DWG C1

CAP

C.W. UP TO DOMESTIC WATER HEATER NO.2

CONT ON DWG P3

4" FD

ABOVE CEILING

BILGE PUMP DISCHARGE

GATE & CHECK VALVE IN PUMP DISCHARGE

CONT ON DWG P-3

BELOW FLOOR

4" AD

BOTTOM OF PIT EL 555.00' BILGE PUMP #1 BELOW FLOOR

INV EL 566.16'

INV. EL. 576.67'

INV EL 571.60'

TIE INTO SUMP OF SUMP PUMP

FOR CONTINUATION SEE DWG C-1

G

REV 3 CONCURRENCE							
DATE		DATE		DATE		DATE	
12478	CSEP	6/16/78	AB41	5/23/78	ASOIM	5/9/78	AB51	5-17-78	4-13-14

EQUIPMENT SCHEDULE

N

BILGE PUMP NO. 1
SINGLE PUMP, 1/2 HP MOTOR, 1750 RPM 15 GPM AGAINST 25 FT HEAD.

BILGE PUMP NO. 2
DUPLEX PUMP, 2 HP MOTOR, 1750 RPM 125 GPM AGAINST 30 FT HEAD

DOMESTIC WATER HEATER NO. 1 (STEAM)
CAPACITY TO RAISE 54 GPH WATER FROM 55°F TO 140°F WITH STEAM AT 15 PSIG, 48 GALLON MINIMUM STORAGE CAPACITY.

DOMESTIC WATER HEATER NO. 2 (ELECTRIC)
CAPACITY TO RAISE 45 GPH WATER FROM 55°F TO 140°F WITH 80 GALLON MINIMUM STORAGE CAPACITY, TWO ELEMENT, 5000 WATTS EACH.

ELECTRIC WATER COOLER (P.5)
CAPACITY TO COOL 10 GPH WATER FROM 90° F TO 50° F WITH ROOM TEMPERATURE AT 90° F.

SUMP PUMP NO. 1
IMMERSIBLE NON-CLOG EQUAL TO WEINMAN TYPE M 15 GPM AGAINST 10 FT HEAD - PROVIDE CHECK & GATE VALVES IN DISCHARGE

DOMESTIC WATER HEATER NO. 3 (ELECTRIC)
BACK-UP FOR HEATER NO. 1 WHEN STEAM IS NOT AVAILABLE. HEATER SHALL SUPPLY 140°F WATER AND HAVE 54 GPH RECOVERY CAPACITY AT 90°F ΔT, WITH 12 KW (MIN.) IMPUT. HEATER SHALL HAVE 50 GALLON (MIN.) STORAGE CAPACITY, 3 INDIVIDUALLY ADJUSTABLE LOW WATT DENSITY INCOLOY HEATING ELEMENTS; WITH T & P RELIEF VALVE, 480VAC, 3Φ, 60W BRADFORD-WHITE MODEL M-I-50-12-3S-F, OR EQUAL.

4

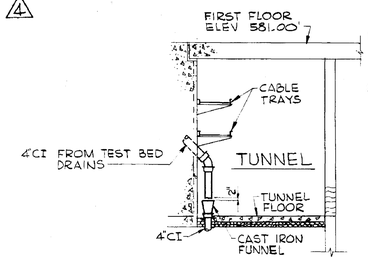

DETAIL 1/P1P1
SCALE 1"=1'-0"

NOTE:
1. ALL ELECTRICAL WORK SHALL CONFORM TO THE N.E.C. AS A MINIMUM STANDARD.
2. LABEL SAFETY SWITCH WITH PERMANENT NAMEPLATE INDICATING VOLTAGE, PHASE, AND POWER I.E. "480 VAC, 3Φ, MCC 2-BB".

LEGEND

—A—	COMPRESSED AIR
— — —	COLD WATER
— — —	HOT WATER
- - - -	VENT
—SS—	SOIL WASTE DRAIN
—IW—	INDUSTRIAL WATER
— F —	FOUNDATION DRAIN
—SD—	STORM DRAIN
⊡ FD	FLOOR DRAIN
O CO	CLEAN OUT
◎	AREA DRAIN
VTR	VENT THRU ROOF
WHA	WATER HAMMER ARRESTER
▭	FLEXIBLE CONNECTION

REV	BY	DATE	DESCRIPTION	CI. NO.	APPROVED
4	AJG	9-20-78	ADDED DOMESTIC WATER HTR. # 3	6093	
3	DHF	3/23/78	ADDED SPILL PREVENTION	FD-208	
2	JD	12/1/65	ADDED DRAIN LINE FROM ELECTRICAL AREA WAY TO SUMP	12072-9	
1	JD	11/4/65	RELOCATED SUMP PUMP, ADDED 1/2" I.W. AND 3/4" AIR LINES		

NATIONAL AERONAUTICS AND SPACE ADMINISTRATION — M S F C — HUNTSVILLE, ALABAMA

SANDERS & THOMAS INC. POTTSTOWN PA. - WASH., D.C. - MONT., ALA.

EXTENSION OF LOAD TEST ANNEX (BUILDING NO. 4619)

PLUMBING
BASEMENT FLOOR PLAN

NASA AE CONT. NO. NAS 8-12014 — FILE NO. 9009 M S F C

SUBMITTED: [signature] P.E. — APPROVAL RECOMMENDED: R.J. Barnett — APPROVED: [signature] CHIEF DESIGN BRANCH — NASA DATE: 6-16-64

A/E DATE: 12 MAY 64 — LAB. / DATE: 6/15/64

DESIGNED EHW
DRAWN EHW
CHECKED RAS
SCALE 1/8" = 1'-0"

APPROVED: B. Barnett MECHANICAL SECTION — DESIGN DATE: 6-7-64 — SPEC NO. F&D 633

DRWG. NO. F&D-C-4619-P1

REF NO. P1

APPROVED FOR SAFETY — GEN. ENGR. SAFETY OFFICE — DATE

4619

MSFC MASTER BID DISK 11-18-2013

THIS DRAWING AND SPECIFICATION, OR COPIES THEREOF, FURNISHED BY NASA ARE THE PROPERTY OF NASA AND ARE NOT TO BE USED IN ANY MANNER FOR CONSTRUCTION NOT SPECIFICALLY AUTHORIZED BY NASA. THEY ARE NOT TO BE COPIED OR REPRODUCED IN ANY MANNER. ALL RIGHTS ARE RESERVED. ACCEPTANCE OF THESE DRAWINGS AND SPECIFICATIONS CONSTITUTES AGREEMENT THAT NO RIGHTS ARE CONVEYED TO REPRODUCE OR HAVE REPRODUCED OR USE THEM FOR CONSTRUCTION NOT SPECIFICALLY AUTHORIZED BY NASA OR ASSIGNED BY IT AND THAT NO RIGHTS ARE CONVEYED TO REPRODUCE OR USE THEM IN ANY MANNER DETRIMENTAL TO THE INTEREST OF NASA. ANY INFRINGEMENT OF NASA'S RIGHTS WILL BE PROSECUTED TO THE FULLEST EXTENT OF THE LAW. PATENTS: INVENTIONS MADE IN THE PERFORMANCE OF WORK UNDER THIS CONTRACT ARE SUBJECT TO THE PATENT PROVISIONS OF THE CONTRACT.

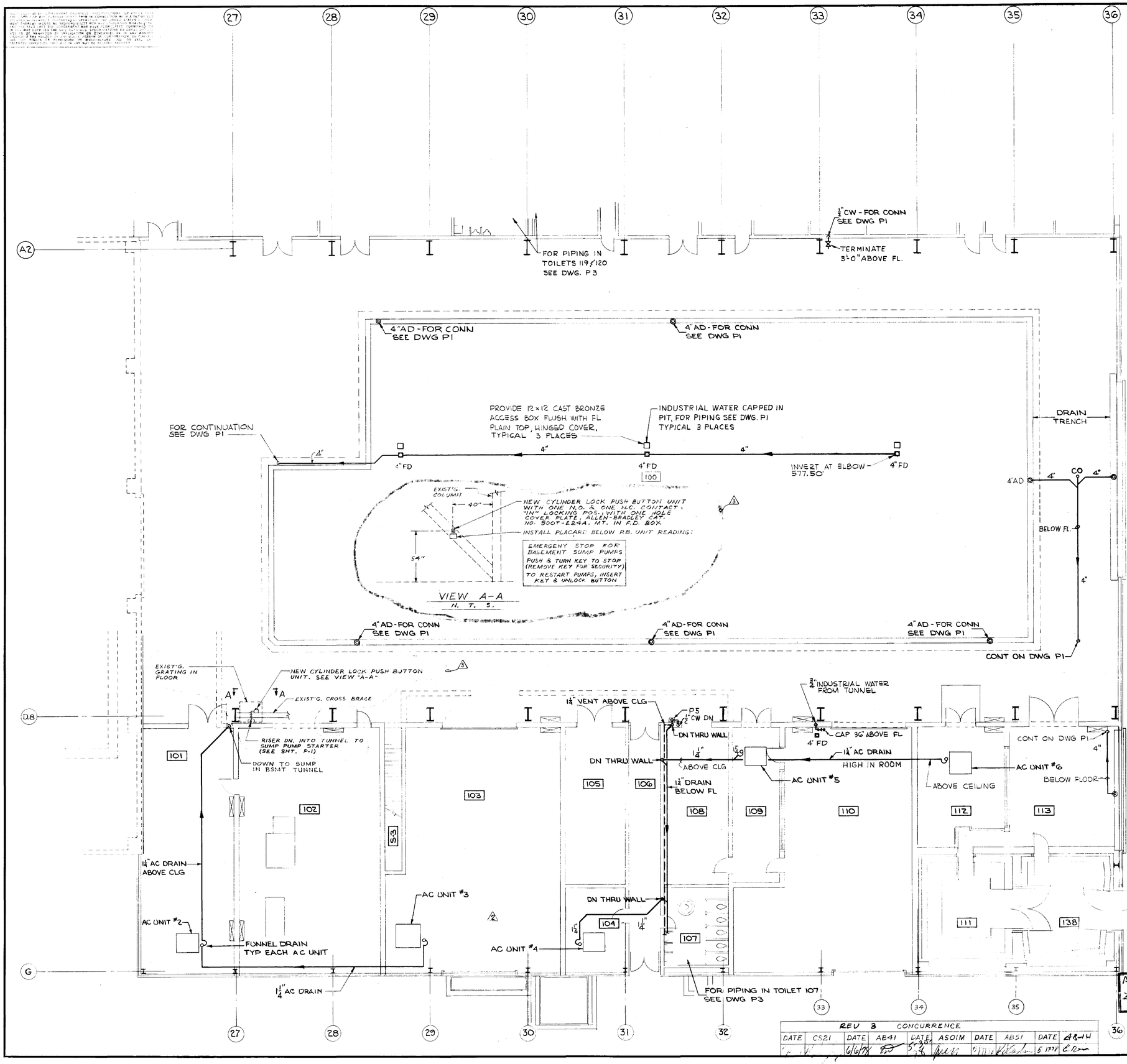

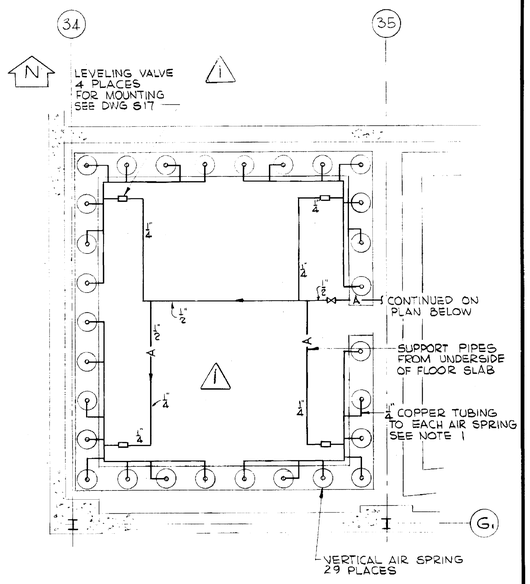

PLAN OF PIPING TO AIR SPRINGS
ANECHOIC ROOM [111]
SCALE ¼" = 1'-0"

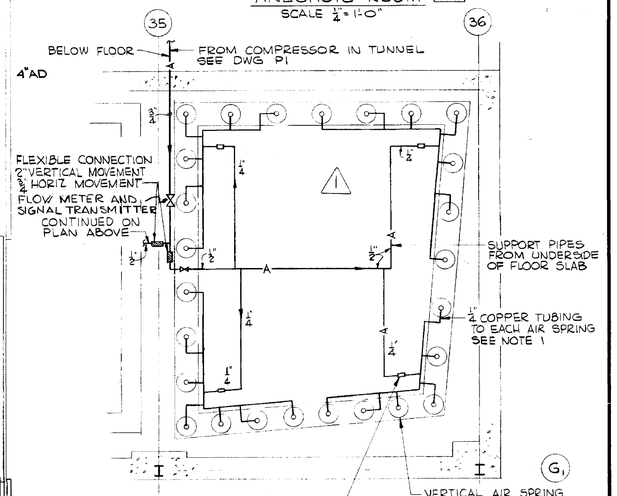

PLAN OF PIPING TO AIR SPRINGS
REVERBERANT ROOM [138]
SCALE ¼" = 1'-0"

REV	BY	DATE	
3	J.E.B.	5/5/78	ADDED SPILL PREVENTION DEVICES
2	VDP	8-21	AS BUILT
1	JD	1-8-65	DELETED HORIZONTAL SPRINGS

TD 208 (12072-4 (12072-1) CT. NO.)

NATIONAL AERONAUTICS AND SPACE ADMINISTRATION — M S F C — HUNTSVILLE, ALABAMA

SANDERS & THOMAS INC. POTTSTOWN PA. - WASH. D.C. - MONT., ALA.

EXTENSION OF LOAD TEST ANNEX (BUILDING NO. 4619)

PLUMBING

FIRST FLOOR

REV 3 CONCURRENCE									
DATE	CS21	DATE	AB41	DATE	ASOIM	DATE	AB51	DATE	AB44
		6/6/64		5/26/64		5/27/64		6/8/64	

APPROVED FOR SAFETY — DATE 12 MAY 64

NASA MF CONT NO NASB-12014

FILE NO. 9010 M S F C

SUBMITTED: W. Sanders, P.E. — APPROVAL RECOMMENDED: R.S. Harrell — CHIEF DESIGN BRANCH — NASA DATE 6-16-64

DESIGNED EHW; DRAWN GGP; CHECKED RAS — APPROVAL RECOMMENDED: B. Beard, CHIEF MECHANICAL SECTION — DESIGN DATE 6-1-64 — SPEC. NO. F&D-433

DRWG. NO. F&D-C-4619-P2

P2

4619

MSFC MASTER BID DISK 11-18-2013

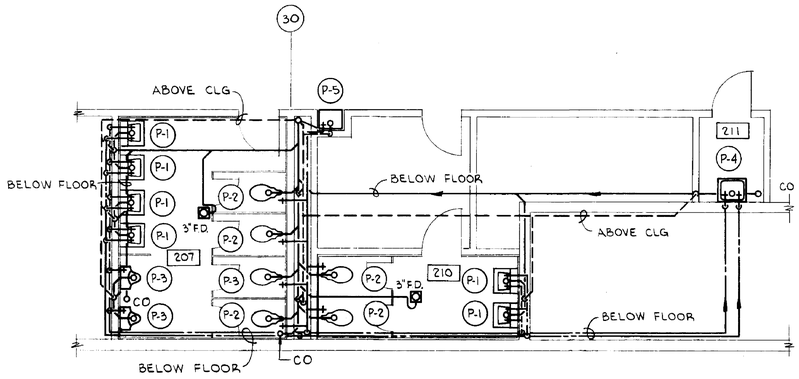

SECOND FLOOR TOILET ROOM PLAN

SCALE $\frac{1}{4}$"=1'-0"

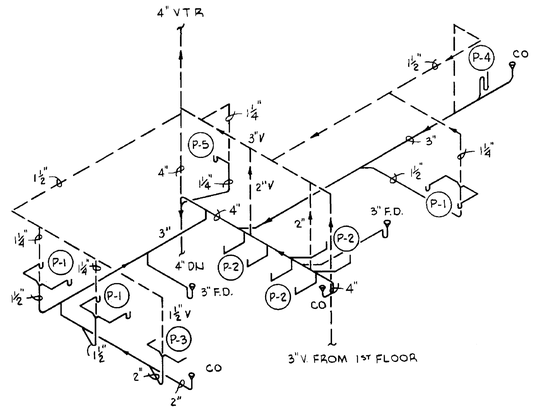

SOIL, WASTE & VENT ISOMETRIC

ROOMS 207, 210 & 211

NO SCALE

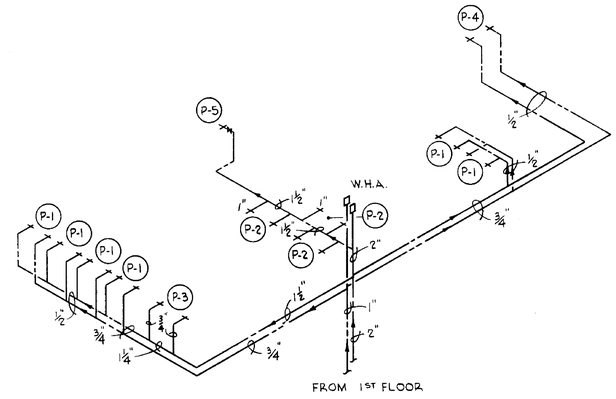

HOT & COLD WATER ISOMETRIC

ROOMS 207, 210 & 211

NO SCALE

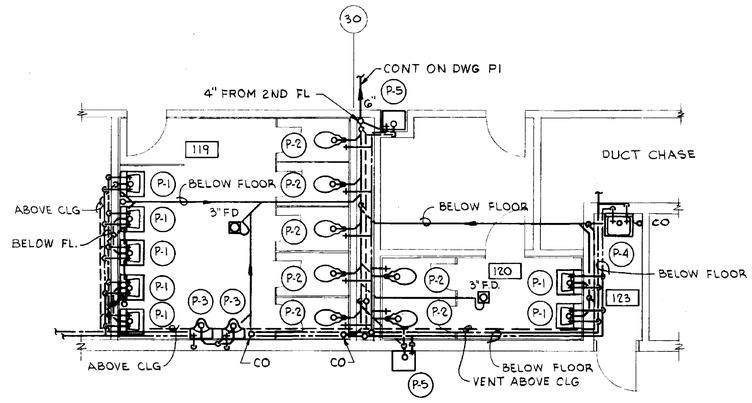

FIRST FLOOR TOILET ROOM PLAN

SCALE $\frac{1}{4}$"=1'-0"

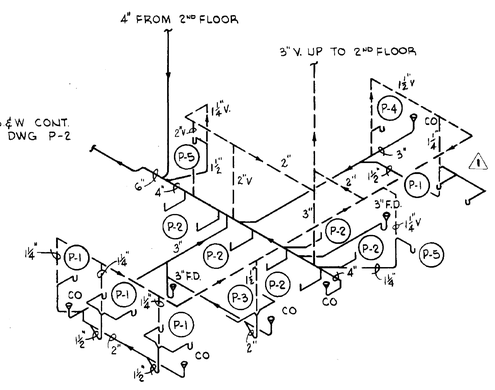

SOIL, WASTE & VENT ISOMETRIC

ROOMS 119, 120 & 123

NO SCALE

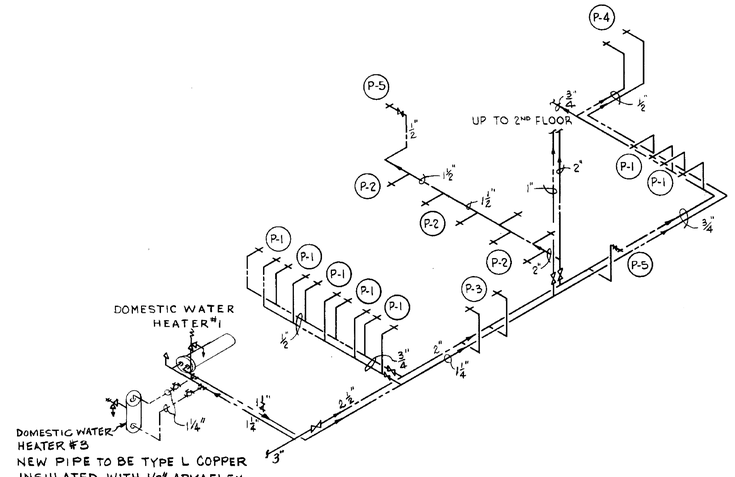

HOT & COLD WATER ISOMETRIC

ROOMS 119, 120 & 123

NO SCALE

PLUMBING FIXTURE SCHEDULE					
SYM.	DESCRIPTION	C.W.	H.W.	WASTE	VENT
P-1	LAVATORY	½	½	1½	1¼
P-2	WATER CLOSET (FLUSH VALVE)	1	–	4	2
P-3	URINAL (WALL HUNG)	¾	–	2	1½
P-4	SERVICE SINK	½	½	3	1½
P-5	ELECTRIC WATER COOLER	½	–	1¼	1¼
P-6	WASH. FOUNTAIN (36" DIA.)	½	½	2	1¼

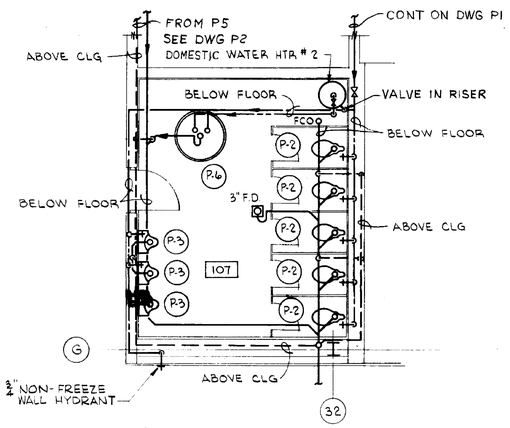

MEN'S TOILET ROOM 107 PLAN

SCALE $\frac{1}{4}$"=1'-0"

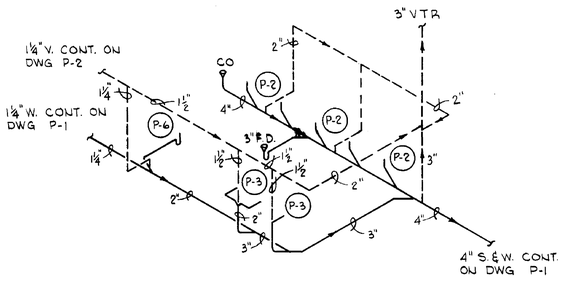

SOIL, WASTE & VENT ISOMETRIC

ROOM 107

NO SCALE

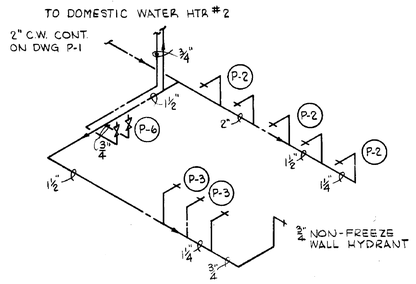

HOT & COLD WATER ISOMETRIC

ROOM 107

NO SCALE

2	AJG	9-20-89	ADDED DOM. WATER HTR. # 3
1	YBP	AUG 15 '67	AS BUILT

NATIONAL AERONAUTICS AND SPACE ADMINISTRATION — M S F C — HUNTSVILLE, ALABAMA

SANDERS & THOMAS INC. POTTSTOWN PA · WASH., D.C. · MONT., ALA.

EXTENSION OF LOAD TEST ANNEX (BUILDING NO. 4619)

PLUMBING

TOILETS & RISER DIAGRAMS

NASA AE CONT. NO. NAS 8-12014 — FILE NO. M S F C 9011

DRAWN: W.A. Sanders P.E. — DATE: 12 MAY 64

DES. NO. E.H.W. P.L.S. R.A.S. — SCALE: NO SCALE

APPROVAL RECOMMENDED: R.A. Harnett — LAB. DATE: 6/15/64

APPROVAL RECOMMENDED: B. Bain — GROUP MECHANICAL — DESIGN DATE: 6-7-64 — SPEC NO. F&D-433

CHIEF DESIGN BRANCH: [illegible] — DATE: 6-16-64

DRWG. NO. F&D-C-4619-P3

APPROVED FOR SAFETY — [illegible] 15 June 64 — GEN. ENGR. SAFETY OFFICE — DATE

P3

4619

MSFC MASTER BID DISK 11-18-2013

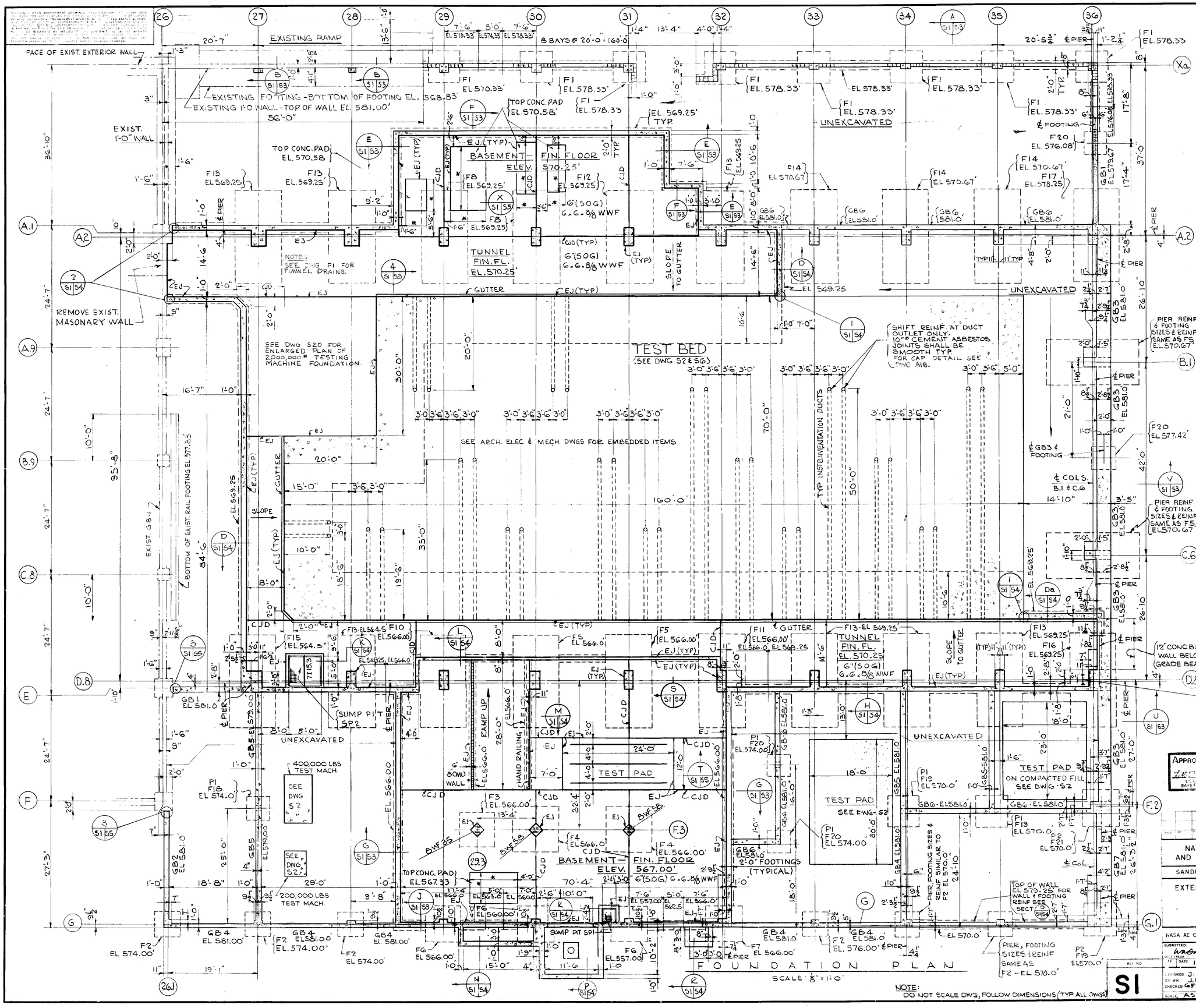

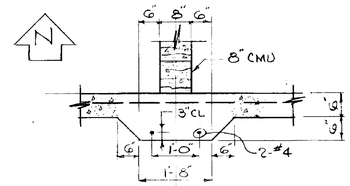

TYP DETAIL FOR THICKENED FLOOR SLABS
(FOR LOCATION OF WALLS SEE ARCH. DWG #A1)
SCALE: 3/4" = 1'-0"

REINFORCED CONCRETE NOTES:

1. ALL CONCRETE SHALL DEVELOP A COMPRESSIVE STRENGTH OF NOT LESS THAN THREE THOUSAND POUNDS PER SQUARE INCH (3,000 P.S.I.) AT AN AGE OF TWENTY-EIGHT (28) DAYS.
2. ALL DETAILING, FABRICATION, AND PLACING OF REINFORCING BARS, INCLUDING SHOP AND PLACING DRAWINGS, SHALL CONFORM TO THE REQUIREMENTS OF THE LATEST EDITION OF THE AMERICAN CONCRETE INSTITUTE STANDARD "MANUAL OF STANDARD PRACTICE FOR DETAILING REINFORCED CONCRETE STRUCTURES (ACI 315)".
3. UNLESS NOTED OTHERWISE ON THE STRUCTURAL DRAWINGS, ALL DEFINITIONS, DETAILS OF DESIGN AN CONSTRUCTION, AND OTHER FACTORS ENTERING INTO THE CONCRETE WORK SHALL CONFORM TO THE LATEST EDITION OF THE AMERICAN CONCRETE INSTITUTE STANDARD" BUILDING CODE REQUIREMENTS FOR REINFORCED CONCRETE (ACI 318)".
4. BACKFILL SHALL NOT BE PLACED AGAINST CONCRETE FOUNDATION WALLS UNTIL THE CONCRETE HAS ATTAINED AN AGE OF TWENTY-EIGHT (28) DAYS AND THE ABUTING BASEMENT AND FIRST FLOOR SLABS HAVE BEEN PLACED.
5. SPLICES OF REINFORCING BARS SHALL PROVIDE A LAP OF AT LEAST TWENTY-FOUR (24) DIAMETERS OF THE LARGER BAR.
6. ALL RECESSES FOR STRUCTURAL STEEL BELOW FIRST FLOOR OR FINISHED GRADE ELEVATIONS SHALL BE FILLED WITH CONCRETE FOR PROTECTION OF THE STRUCTURAL STEEL AFTER THE STEEL IS IN POSITION.
7. ELEVATIONS INDICATED FOR FOOTINGS (F1 ETC.) AND GRADE BEAMS (GB1 ETC.) ARE TO THE TOP OF FOOTINGS AND GRADE BEAMS.
8. PROVIDE BITUMINOUS MEMBRANE WATERPROOFING ON THE OUTSIDE OF ALL FOUNDATION WALLS. (SEE SPECS)
9. ALL SLABS ON GRADE SHALL HAVE 6x6x6/6 W.W.F WITH VAPOR BARRIER, 1" SAND & 5" DRAINAGE FILL, UNLESS OTHERWISE NOTED.
10. ALL PREMOULDED EXP JOINTS SHALL BE ½", UNLESS OTHERWISE NOTED.
11. CENTER LINE OF PIERS ARE LOCATED ON CENTER LINE OF FOOTINGS
12. SEE DWG S4 FOR GRADE BEAM SCHEDULE
13. FOR DESIGN LIVE LOADS, SEE DWG S10
14. * ADJUST DIM. TO SUIT EQUIPMENT PURCHASED

APPROVED FOR SAFETY
12 Jun 64
CHIEF SAFETY OFFICE DATE

NATIONAL AERONAUTICS AND SPACE ADMINISTRATION — M S F C — HUNTSVILLE, ALABAMA

SANDERS & THOMAS INC. POTTSTOWN PA. · WASH. D.C. · MONT. · ALA.

EXTENSION OF LOAD TEST ANNEX (BUILDING NO. 4619)

FOUNDATION PLAN

NASA AE CONT. NO. NAS 8-12014

SUBMITTED W. Saunders P.E.	APPROVAL RECOMMENDED: R.F. Barnett, CHIEF DESIGN BRANCH	APPROVED: Eberhard Rees, DIRECTOR
LEAD ENGR. DATE 12 MAY 64	LAB DATE 6/15/64	NASA DATE 6-16-64
DESIGNED J.B.-S.W.-E.G. DR. W.N. J.R.W. CHECKED G.F.W.-E.E.G.	APPROVAL COMPUTATIONS: Wendell F. Bowen, CHIEF STRUCTURAL DIVISION	DRWG. NO. F8D-C-4619-S1
SCALE AS NOTED	DESIGN DATE 6-12-64	
SHT. NO. S1	SPEC. NO. F & D-433	FILE NO. M S F C 8988

NOTE: DO NOT SCALE DWGS, FOLLOW DIMENSIONS (TYP ALL DWGS)

4619

MSFC MASTER BID DISK 11-18-2013

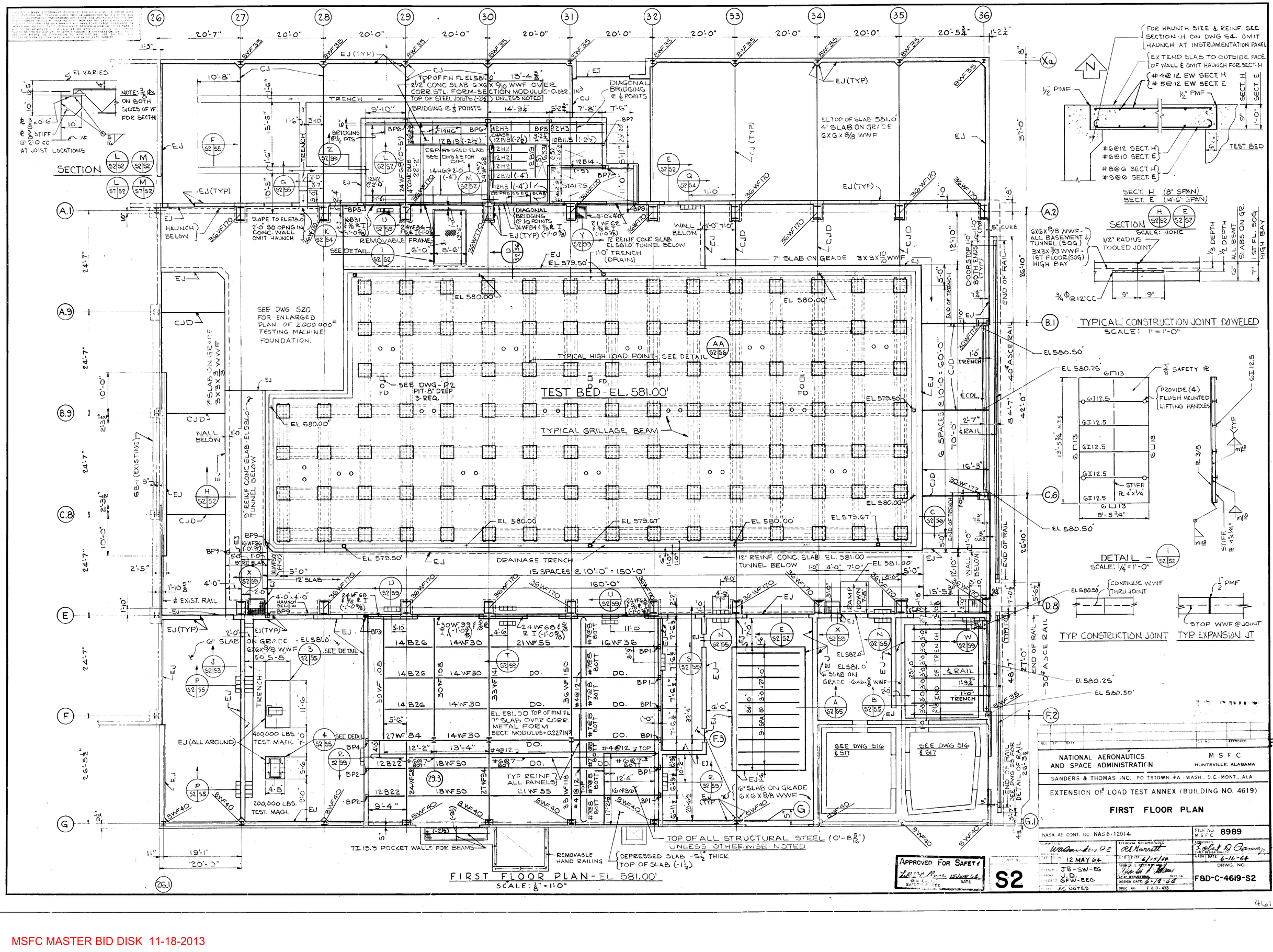

4619

MSFC MASTER BID DISK 11-18-2013

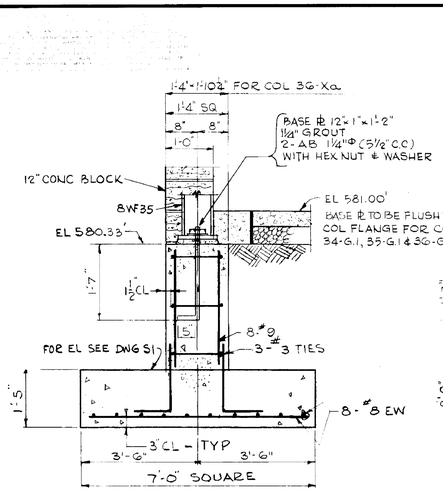

DETAIL - F1
SCALE: ¾"=1'-0"

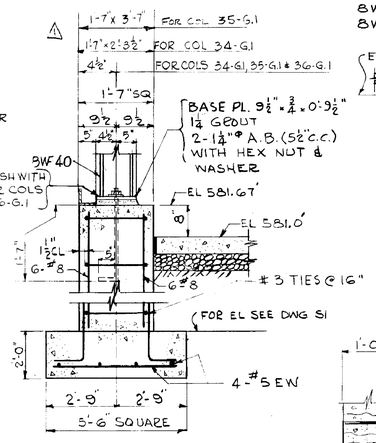

DETAIL - F2
SCALE: ¾"=1'-0"

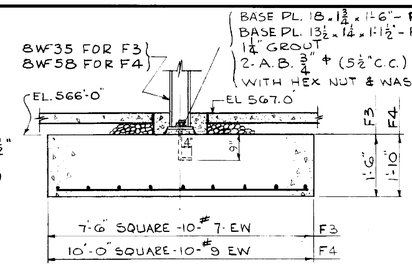

DETAIL - F3 & F4
SCALE: ½"=1'-0"

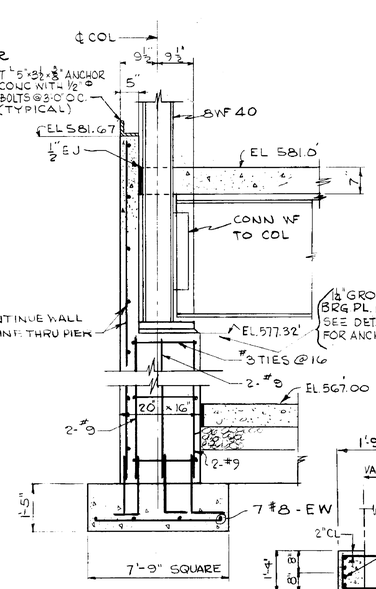

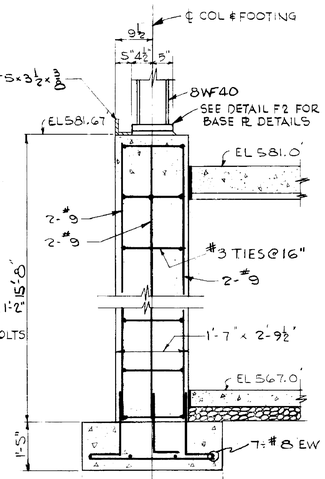

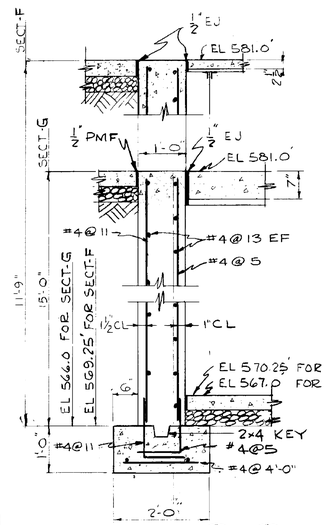

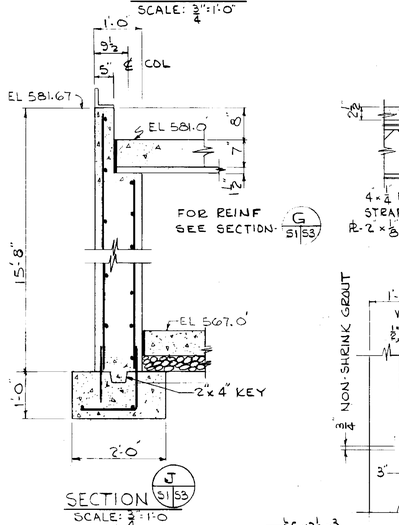

SECTION J S1 S3
SCALE: ¾"=1'-0"

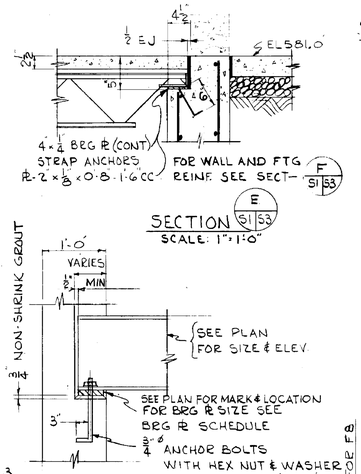

SECTION E S1 S3
SCALE: 1"=1'-0"

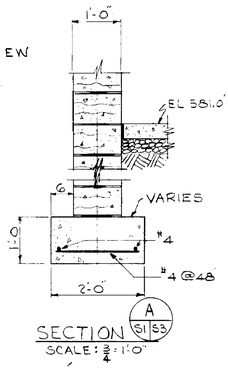

SECTION A S1 S3
SCALE: ¾"=1'-0"

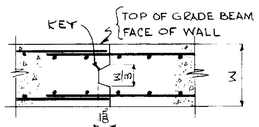

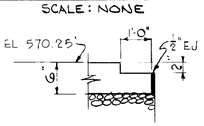

GUTTER DETAIL 4 S1 S3
SCALE: 1"=1'-0"

BEARING PL SCHEDUAL	
MARK	SIZE
BP1	6" X 3/4" X 6"
BP2	5" X 1/2" X 6"
BP3	8" X 1 1/4" X 10"
BP4	8" X 1 3/4" X 1'-2"
BP5	6" X 1/2" X 6"
BP6	8" X 3/4" X 10"
BP7	4" X 1/2" X 6"
BP8	8" X 1" X 9"
BP9	8" X ⅜" X 8"

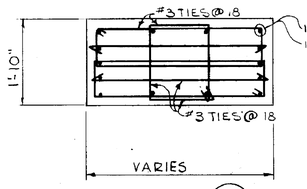

SECTION B S3 S3
SCALE: ¾"=1'-0"

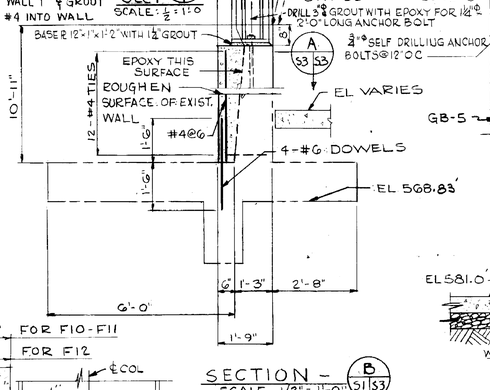

DETAIL - F7
SCALE: ¾"=1'-0"

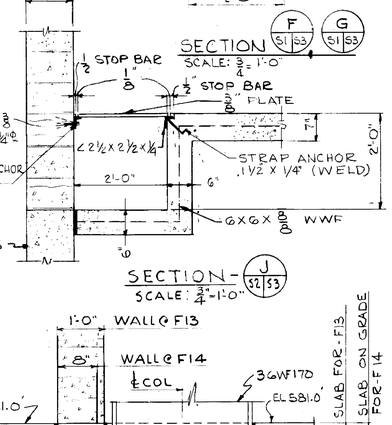

SECTION F S1 S3 G S1 S3
SCALE: ¾"=1'-0"

SECTION - J S2 S3
SCALE: ¾"=1'-0"

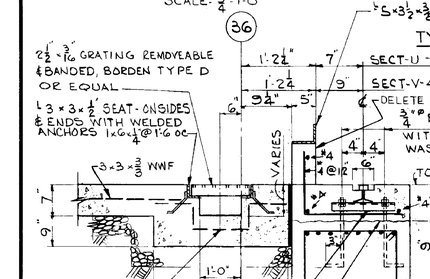

TYPICAL WALL BEARING BEAM DETAIL
SCALE: 1"=1'-0"

SECTION - V S1 S3 & U S1 S3
SCALE: 1"=1'-0"

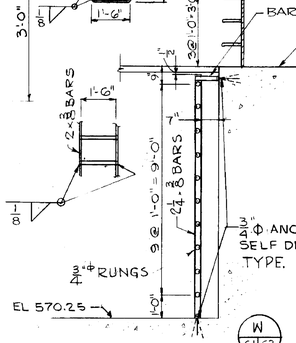

SECTION
SCALE: ⅜"=1'-0"

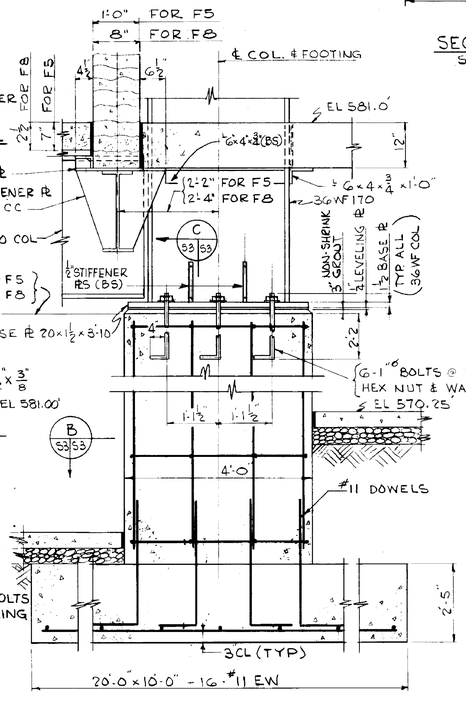

DETAIL-F5 & F8
SCALE: ¾"=1'-0"

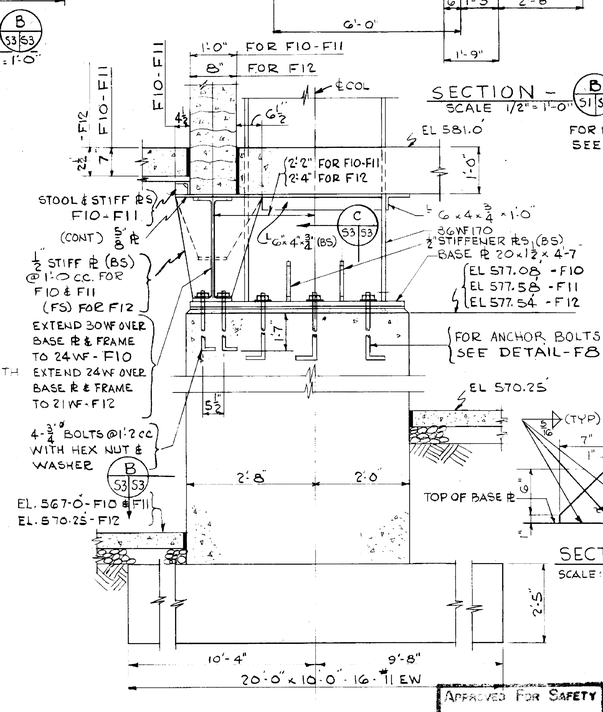

DETAIL-F10, F11 & F12
SCALE: ¾"=1'-0"

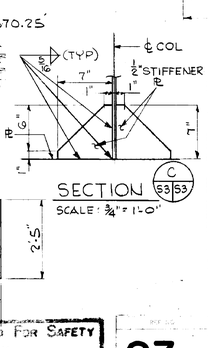

SECTION C S3 S3
SCALE: ¾"=1'-0"

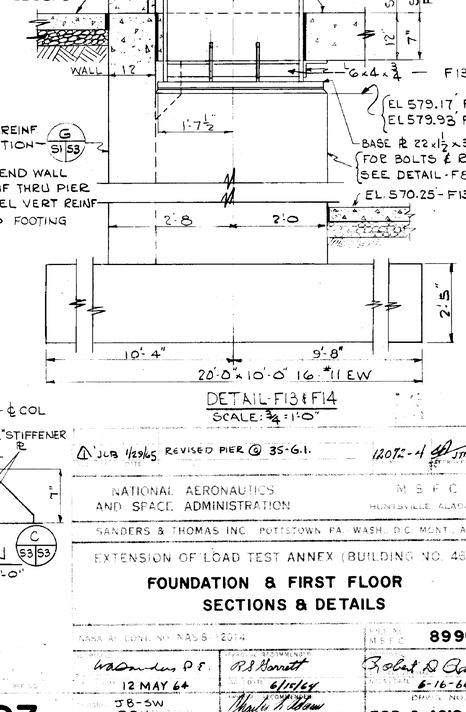

DETAIL-F13 & F14
SCALE: ¾"=1'-0"

1 JOB 11/29/65 REVISED PIER @ 35-G.1. 120772-1

NATIONAL AERONAUTICS AND SPACE ADMINISTRATION — M S F C — HUNTSVILLE, ALABAMA

SANDERS & THOMAS INC. POTTSTOWN PA. WASH. D.C. MONT. ALA.

EXTENSION OF LOAD TEST ANNEX (BUILDING NO. 4619)

FOUNDATION & FIRST FLOOR SECTIONS & DETAILS

NASA AC CONT. NO. NAS8-20114		M S F C 8990
W A Sanders P.E. 12 MAY 64	R B Bennett 6/15/64	Robert D Ramey 6-16-64
JB-SW RRH GFW-EEG AS NOTED	Charles H Adams STRUCTURAL 6-19-64	DRWG. NO. F&D-C-4619-S3

APPROVED FOR SAFETY — DATE

S3

4619

MSFC MASTER BID DISK 11-18-2013

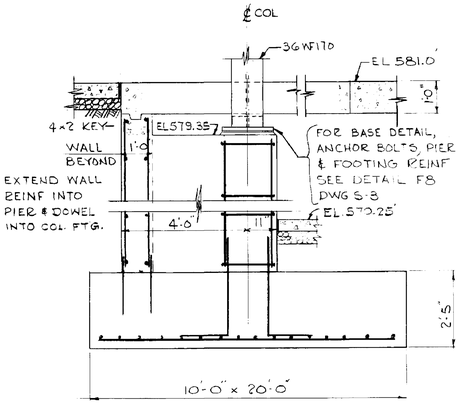

DETAIL - F15
SCALE: ½"=1'-0"

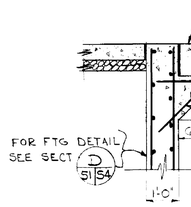

SECTION H S1|S4
SCALE: ½"=1'-0"

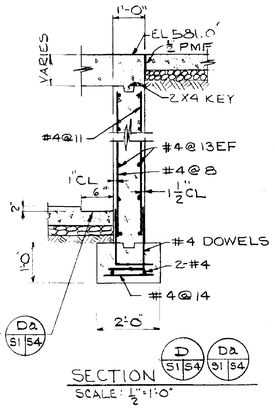

SECTION D S1|S4 D2 S1|S4
SCALE: ½"=1'-0"

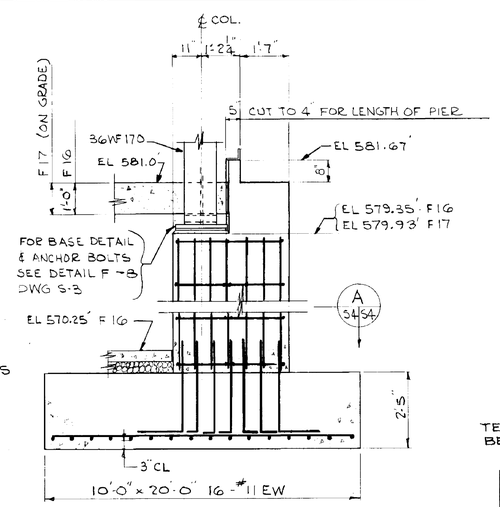

DETAIL - F16 & F17
SCALE: ½"=1'-0

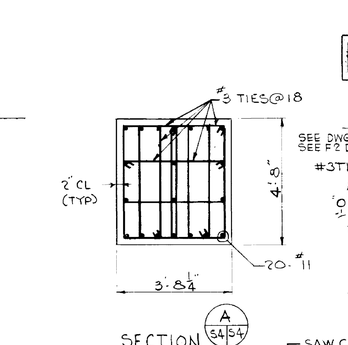

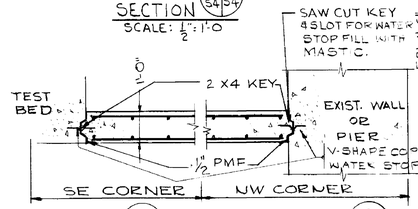

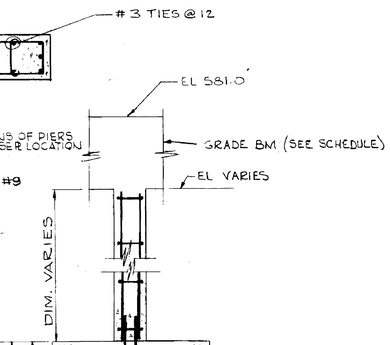

PIER & FOOTING DETAILS-F18, F19, F20, F21.
SCALE: 1"=1'-0"

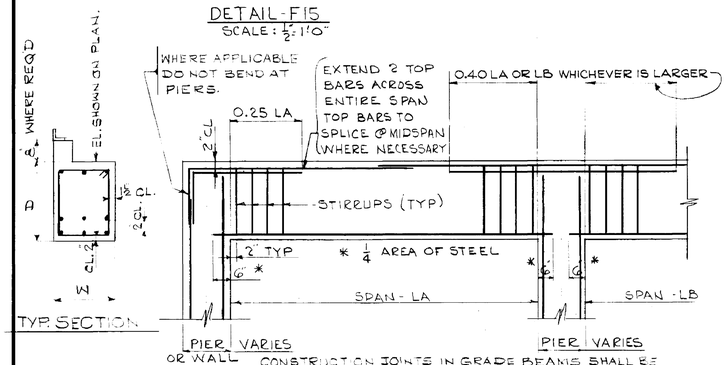

TYPICAL GRADE BEAM DETAILS.
SCALE: ½"=1'-0"

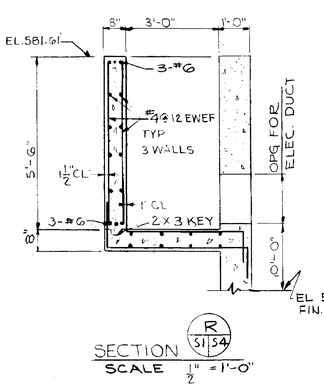

SECTION R S1|S4
SCALE ½" = 1'-0"

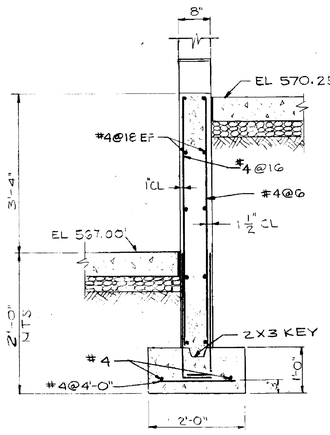

TYP. BETWEEN F5, F10 & F11.

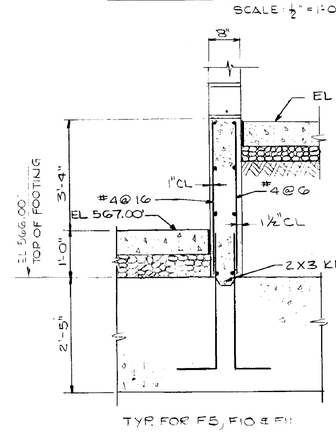

TYP. FOR F5, F10 & F11.

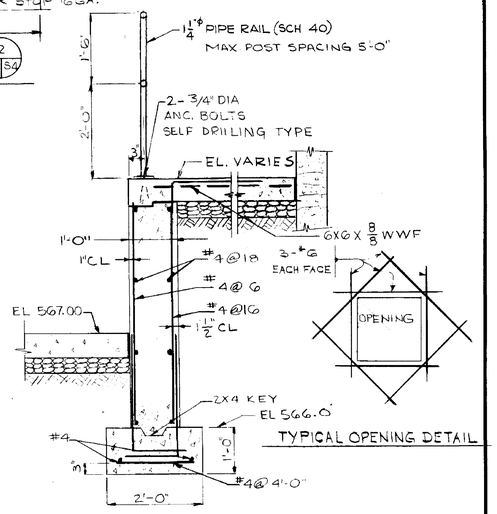

TYPICAL OPENING DETAIL

GRADE BEAM SCHEDULE							
MARK	SIZE		REINFORCING			STIRRUPS	
	W	D	TOP	BOTTOM	REMARKS	SIZE	SPACING FROM EACH SUPPORT
GB-1	12	43	2-#8	3-#11		#3	1@2, 6@12, REST @ 40
GB-2	12	54	2-#10	6-#9	2 ROWS OF 3	#3	1@2, 6@16, REST @ 50
GB-3	24	43	8-#10	8-#9		#3	1@2, 8@15, REST @ 30
GB-4	12	43	2-#9	2-#9		#3	1@2 7@18, REST @ 40
GB-5	12	40	2-#10	6-#9	2 ROWS OF 3	#3	1@2 6@16 REST @ 30
GB-6	12	29	2-#8	3-#11		#3	1@2 6@12, REST @ 30
GB-7	31	43	8-#10	8-#9		#3	1@2 8@15, REST @ 30

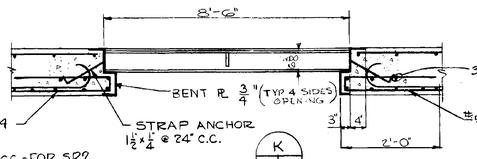

SECTION S S1|S4
SCALE ¾" = 1'-0"

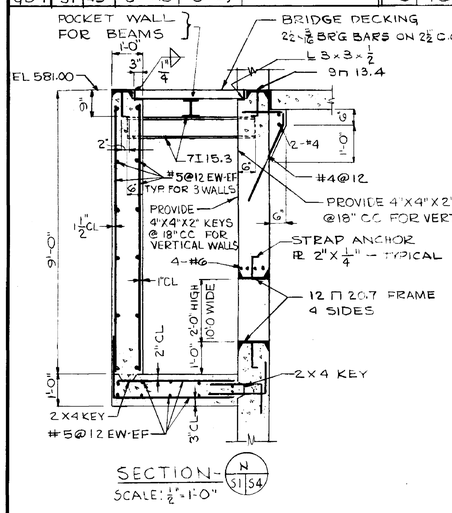

SECTION-N S1|S4
SCALE: ½"=1'-0"

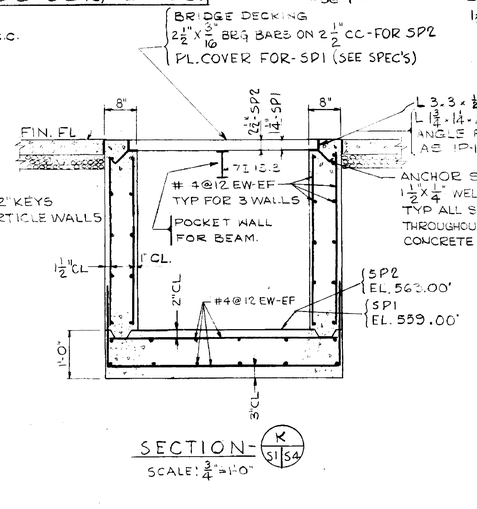

SECTION-K S1|S4
SCALE: ¾"=1'-0"

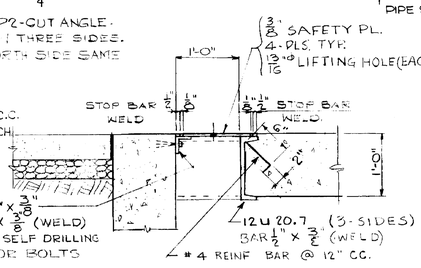

SECTION Q S2|S4
SCALE: 1"=1'-0"

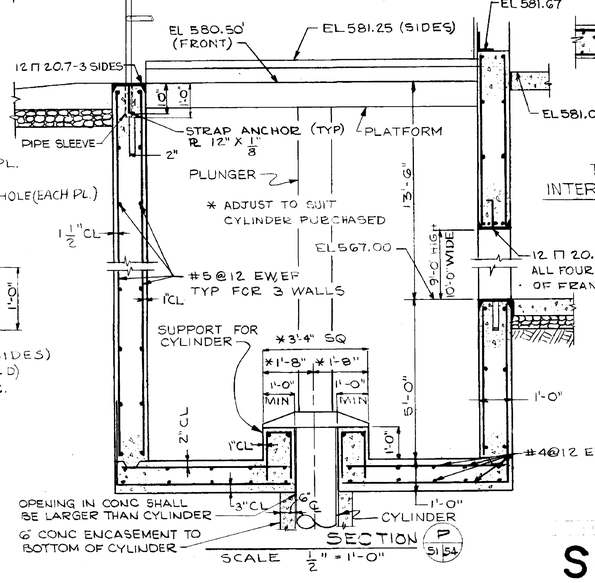

SECTION P S1|S4
SCALE ½" = 1'-0"

SECTION L S1|S4
SCALE ¾" = 1'-0"

SECTION M S1|S4
SCALE ¾" = 1'-0"

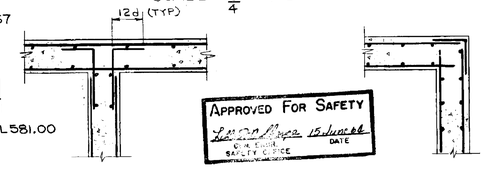

TYPICAL DETAIL INTERSECTION OF WALLS
SCALE 1½" = 1'-0"

TYPICAL CORNER DETAIL
SCALE 1½"=1'-0"

AS BUILT

NATIONAL AERONAUTICS AND SPACE ADMINISTRATION			M S F C HUNTSVILLE, ALABAMA
SANDERS & THOMAS INC. POTTSTOWN PA. WASH., D.C. MONT. ALA.			
EXTENSION OF LOAD TEST ANNEX (BUILDING NO 4619)			
FOUNDATION & FIRST FLOOR SECTIONS & DETAILS			
NASA AE CONT. NO. NAS8-12014			FILE NO. 8991
DESIGN W. J. C.	PROJECT MANAGER R.L. Harrett		APPROVED
DATE 12 MAY 64	CHF. DIV. DATE 6/17/64		MSFC DATE 6-16-64
DETAILED J.B-S.W. DRAWN R.B.H. CHECKED G.F.W-E.E.G.	OFFICIAL RECOMMENDATION Virgil E. Adkins STRUCTURAL SECTION		DRWG. NO. F&D-C-4619-S4
SCALE AS NOTED	CHF. DIV. DATE 6-18-64		
	SPEC. NO. F&D-433		

S4

4619

MSFC MASTER BID DISK 11-18-2013

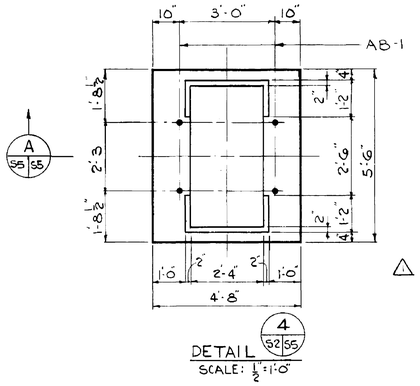

DETAIL (4 S2|S5)
SCALE: ½"=1'-0"

NOTE: CONTRACTOR TO VERIFY DIMENSIONS, MACHINE IS LOCATED IN BUILDING BLDG. 4619 RELOCATION OF 200,000 POUND MACHINE BY OTHERS

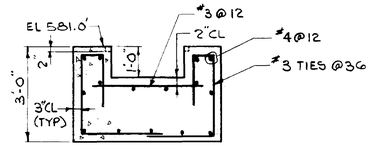

SECTION (A S5|S5)
SCALE: ½"=1'-0"

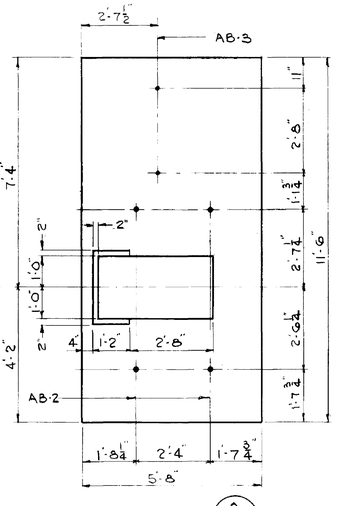

DETAIL (3 S2|S5)
SCALE: ½"=1'-0"

NOTE: CONTRACTOR TO VERIFY DIMENSIONS, MACHINE IS LOCATED IN BUILDING. 4619 RELOCATION OF 400000 POUND MACHINE BY OTHERS.

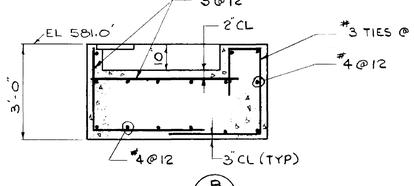

SECTION (B S5|S5)
SCALE: ½"=1'-0"

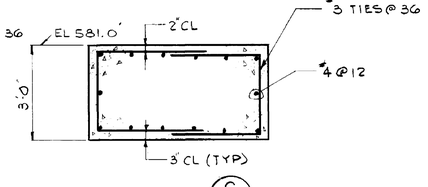

SECTION (C S5|S5)
SCALE: ½"=1'-0"

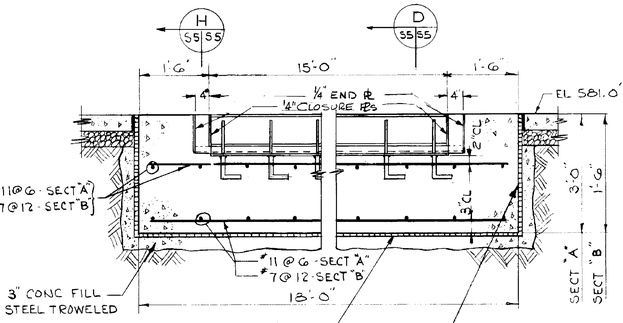

⚠ 4" THICK FOAM GLASS ANTI-VIBRATION PAD (BOTTOM)
TYPE PGM-12 (12# DENSITY) SECT "A"
TYPE PGM-08 (8# DENSITY) SECT "B"
AMBER/BOOTH CO. OR EQUAL.

SECTION (A S2|S5 B S2|S5)
SCALE: ¾"=1'-0"

⚠ 1" THICK FOAM GLASS VERTICAL - ALL SIDES
TYPE PGM-04 (4# DENSITY)
AMBER/BOOTH CO OR EQUAL

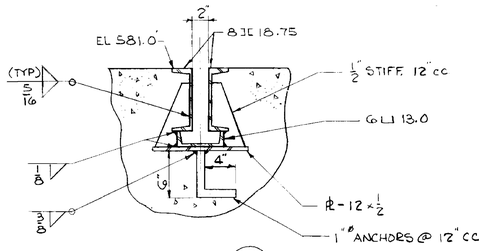

SECTION (D S5|S5)
SCALE: 1½"=1'-0"

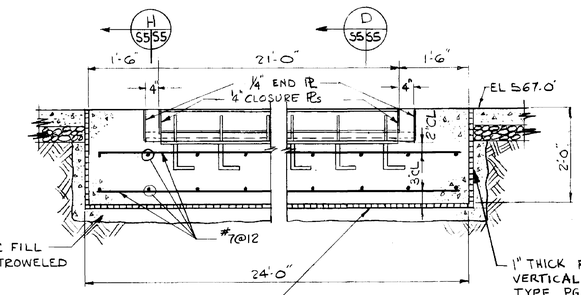

⚠ 4" THICK FOAM GLASS ANTI-VIBRATION PAD (BOTTOM)
TYPE PGM-06 (6# DENSITY)
AMBER/BOOTH CO. OR EQUAL.

SECTION (T S1|S5)
SCALE: ¾"=1'-0"

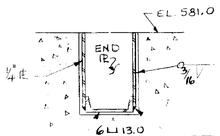

SECTION (H S5|S5)
SCALE 1½"=1'-0"

⚠ 1" THICK FOAM GLASS VERTICAL - ALL SIDES
TYPE PGM-04 (4# DENSITY)
AMBER/BOOTH CO. OR EQUAL.

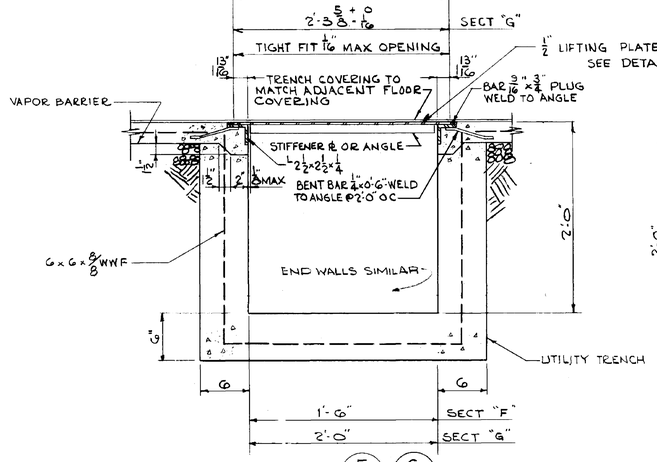

SECTION (F S2|S5 G S2|S5)
SCALE: 1½"=1'-0"

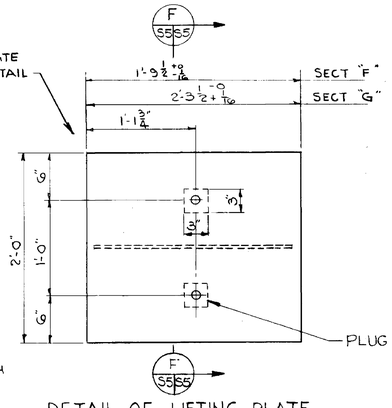

DETAIL OF LIFTING PLATE
SCALE: 1½"=1'-0"

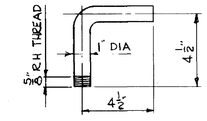

LIFTING HANDLE DETAIL
SCALE: 3"=1'-0"

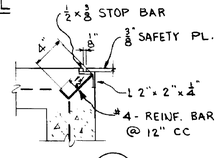

DETAIL (1 S5|S5)
SCALE: 1½"=1'-0"

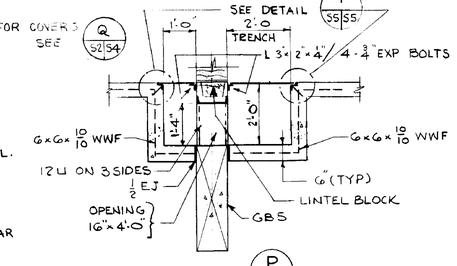

SECTION
SCALE: ½"=1'-0"

SECTION (X S1|S5)

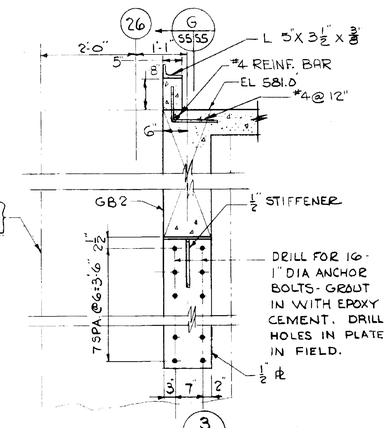

DETAIL (3 S1|S5)
SCALE: ¾"=1'-0"

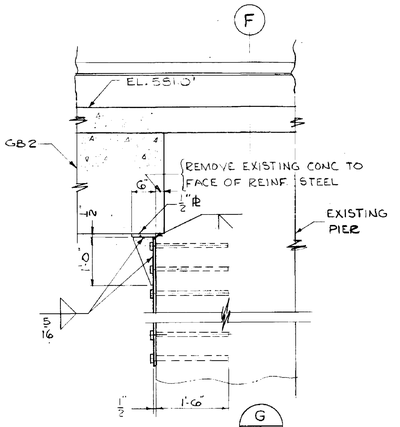

SECTION (G S5|S5)
SCALE: ¾"=1'-0"

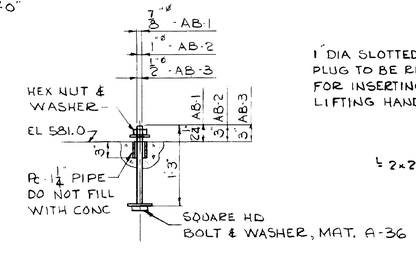

DETAIL AB-1, AB-2 & AB-3
SCALE: 1"=1'-0"

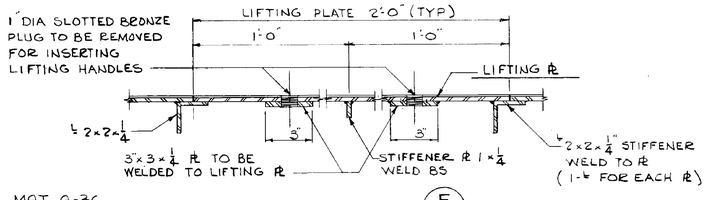

SECTION (F S5|S5)
SCALE: 3"=1'-0"

⚠ JLB 1/29/65 REVISED ANTI-VIBRATION PADS.

NATIONAL AERONAUTICS AND SPACE ADMINISTRATION	M S F C HUNTSVILLE ALABAMA
SANDERS & THOMAS INC. POTTSTOWN P.	WASH. D.C.-MONT., ALA

EXTENSION OF LOAD TEST ANNEX BUILDING NO. 4619)

FOUNDATION DETAILS

NASA AE CONT. NO. NAS8-12014

DESIGNED W.A. Sanders, P.E. DATE 12 MAY 64	APPROVAL RECOMMENDED R.A. Harnett DATE 6/15/64	APPROVED Robert O. Ramsay DATE 6-16-64
DESIGN JB-SW	APPROVAL OF IMPLEMENTATION Chas. H. Adams CHIEF STRUCTURAL DESIGN DATE 6-18-64	DRWG. NO. F&D-C-4619-S5
DRAWN RBH CHECKED GFW - EEG		
SCALE AS NOTED	OFFICE NO. F & D-423	

APPROVED FOR SAFETY
Lee C. Myers 15 June 64
SAFETY OFFICE DATE

S5

4619

MSFC MASTER BID DISK 11-18-2013

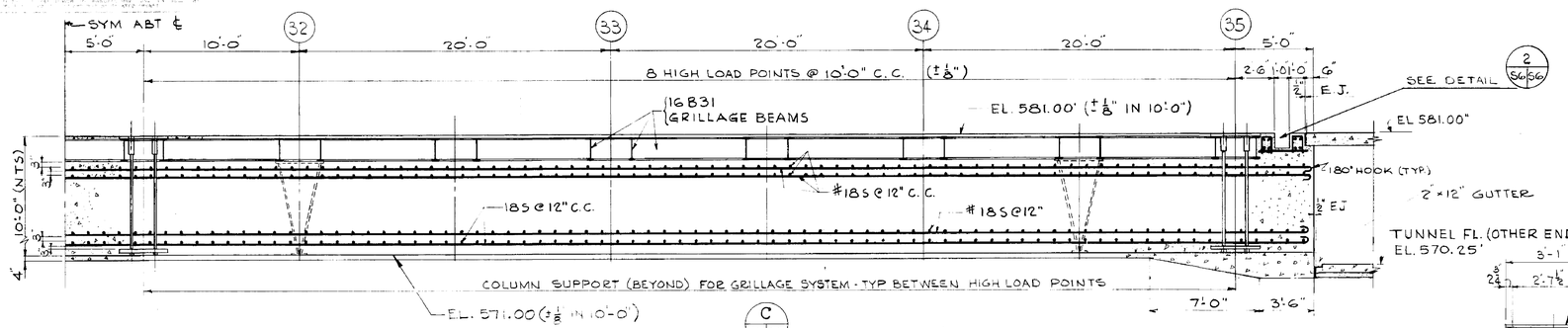

SECTION C S2/S6
SCALE: 1/4"=1'-0"

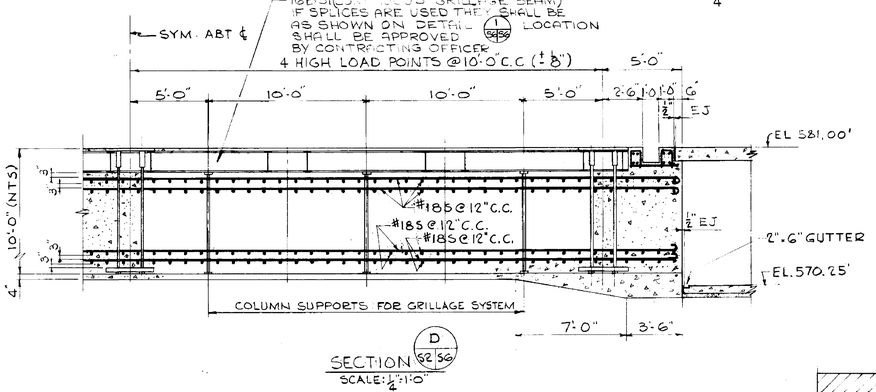

SECTION D S2/S6
SCALE: 1/4"=1'-0"

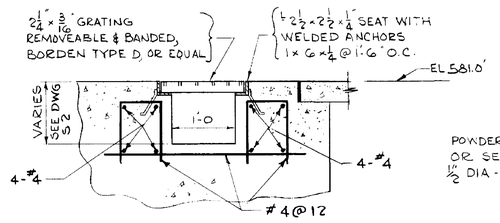

DETAIL 2 S6/S6
SCALE: 1"=1'-0"

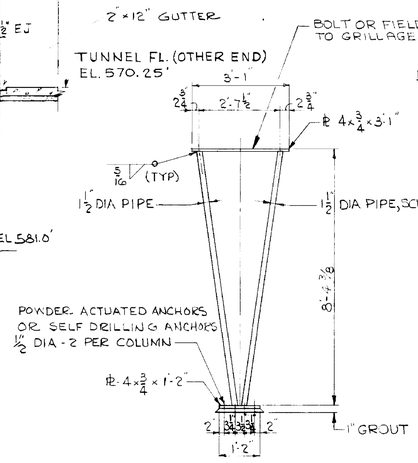

TYP. COLUMN DETAIL
SCALE: 1/2"=1'-0"

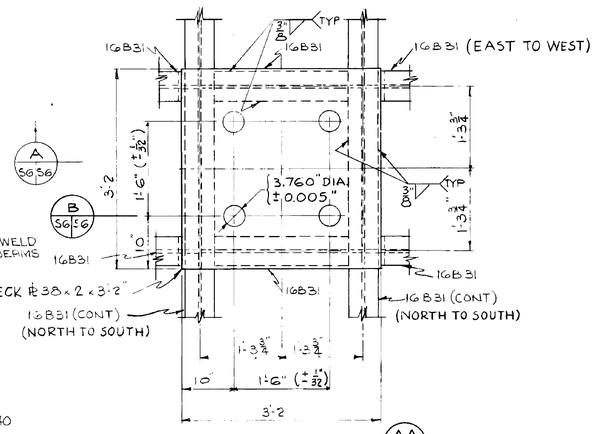

TYPICAL HIGH LOAD POINT DETAIL AA S2/S6
SCALE: 1"=1'-0"

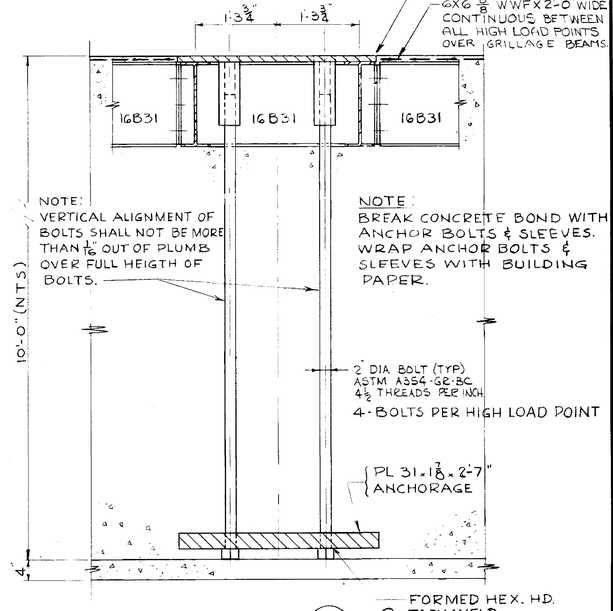

SECTION A S6/S6
SCALE: 1"=1'-0"

FORMED HEX. HD.
TACK WELD

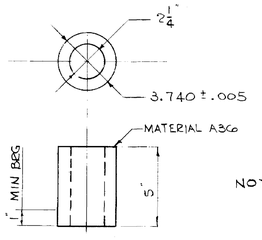

COLLAR DETAIL
(NOT IN CONTRACT)
SCALE: 3"=1'-0"

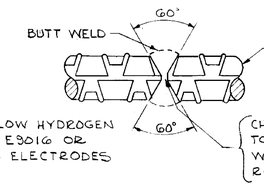

WELDED SPLICE DETAIL
(FOR #18S REINF. BARS)
NO SCALE

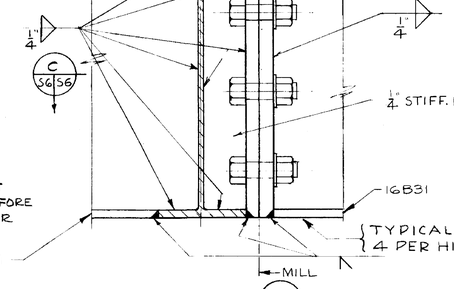

DETAIL 1 S6/S6
SCALE: 3"=1'-0"

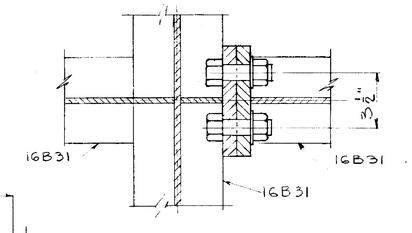

SECTION C S6/S6
SCALE: 3"=1'-0"

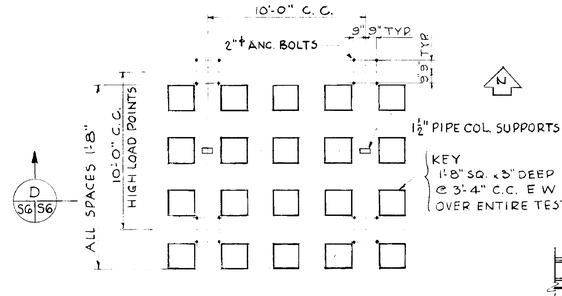

TYPICAL - LOCATION OF HORIZONTAL CONSTRUCTION KEYS

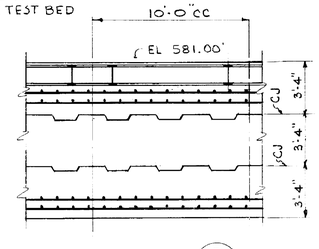

SECTION D S6/S6
NO SCALE

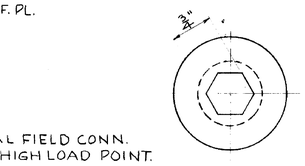

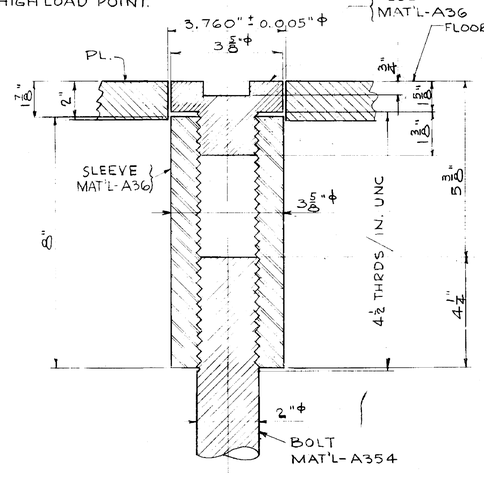

SECTION B S6/S6
SCALE: 6"=1'-0"

NOTES:
1. ALL 18S REINFORCING SHALL BE BUTT WELDED, LAPPED SPLICES WILL NOT BE PERMITTED.
2. REINFORCING OR ANY OTHER ITEM SHALL NOT BE SUPPORTED FROM THE GRILLAGE BEAMS.
3. WELDING OF ANY ITEM TO THE 2" DIA A354 BOLTS WILL NOT BE PERMITTED.
4. 18S REINFORCING SHALL BE INTERMEDIATE GRADE IN ACCORDANCE WITH ASTM A 408.
5. THE CONCRETE SHALL BE PLACED IN THREE SEPARATE POURS OF THREE HORIZONTAL LAYERS, AT THE LOCATIONS SHOWN. ALL ITEMS IMBEDDED IN THE FIRST LAYER OF CONCRETE INCLUDING, BUT NOT LIMITED TO, REINFORCING, ANCHORAGE PLATES, 2" ϕ ANCHOR BOLTS AND IN ADDITION THE SLEEVES, GRILLAGE BEAMS AND DECK PLATES, SHALL BE PLACED AND SECURED TO THE TOLERANCES INDICATED PRIOR TO PLACING THE FIRST LAYER OF CONCRETE.
6. ANY IMBEDDED DUCT, PIPE OR OTHER UTILITY SHALL BE PLACED AT LEAST THREE INCHES (3") CLEAR, VERTICALLY, FROM THE REINFORCING, GRILLAGE BEAMS AND HORIZONTAL CONSTRUCTION JOINTS.

NATIONAL AERONAUTICS AND SPACE ADMINISTRATION — M S F C — HUNTSVILLE, ALABAMA

SANDERS & THOMAS INC. POTTSTOWN PA. WASH. D.C. MONT., ALA.

EXTENSION OF LOAD TEST ANNE (BUILDING NO. 4619)

TEST BED SECTIONS & DETAILS

NASA AE CONT. NO. NAS8-12014 — M S F C FILE NO. 8992

DESIGNED W.A. Sanders 05. — PROJECT ENGINEER R.J. Harrett — DATE SUBMITTED 6/16/64

DRAWN 12 MAY 64 — DATE 6/15/64 — DATE APPROVED 6/16/64

CHECKED EG — LEAD ENGINEER ERH — DIVISION CHIEF R.L. STRUCTURAL — DRWG. NO. F8D-C-4619-S6

DESIGN DATE 6-14-64 — SCALE AS NOTED — SPEC. NO. I & D 433

APPROVED FOR SAFETY — SAFETY OFFICE — DATE 15 June 64

SHT. NO. S6

4619

MSFC MASTER BID DISK 11-18-2013

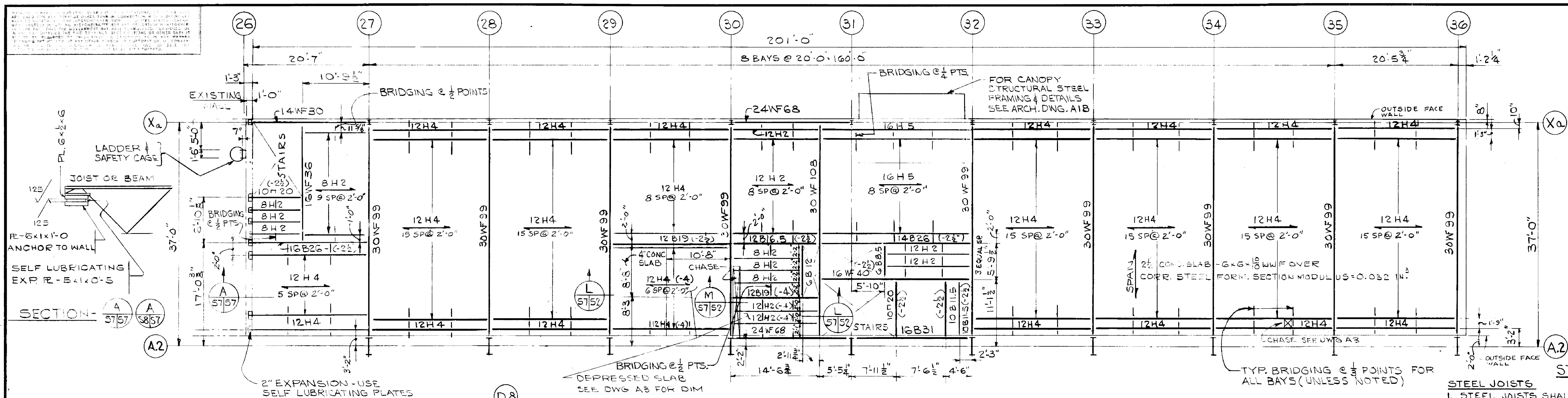

SECOND FLOOR FRAMING PLAN. EL. 596.33'
TOP OF STEEL JOISTS (-2½) UNLESS NOTED
TOP OF STRUCTURAL STEEL (-5) UNLESS NOTED
SCALE - 1/8" = 1'-0"

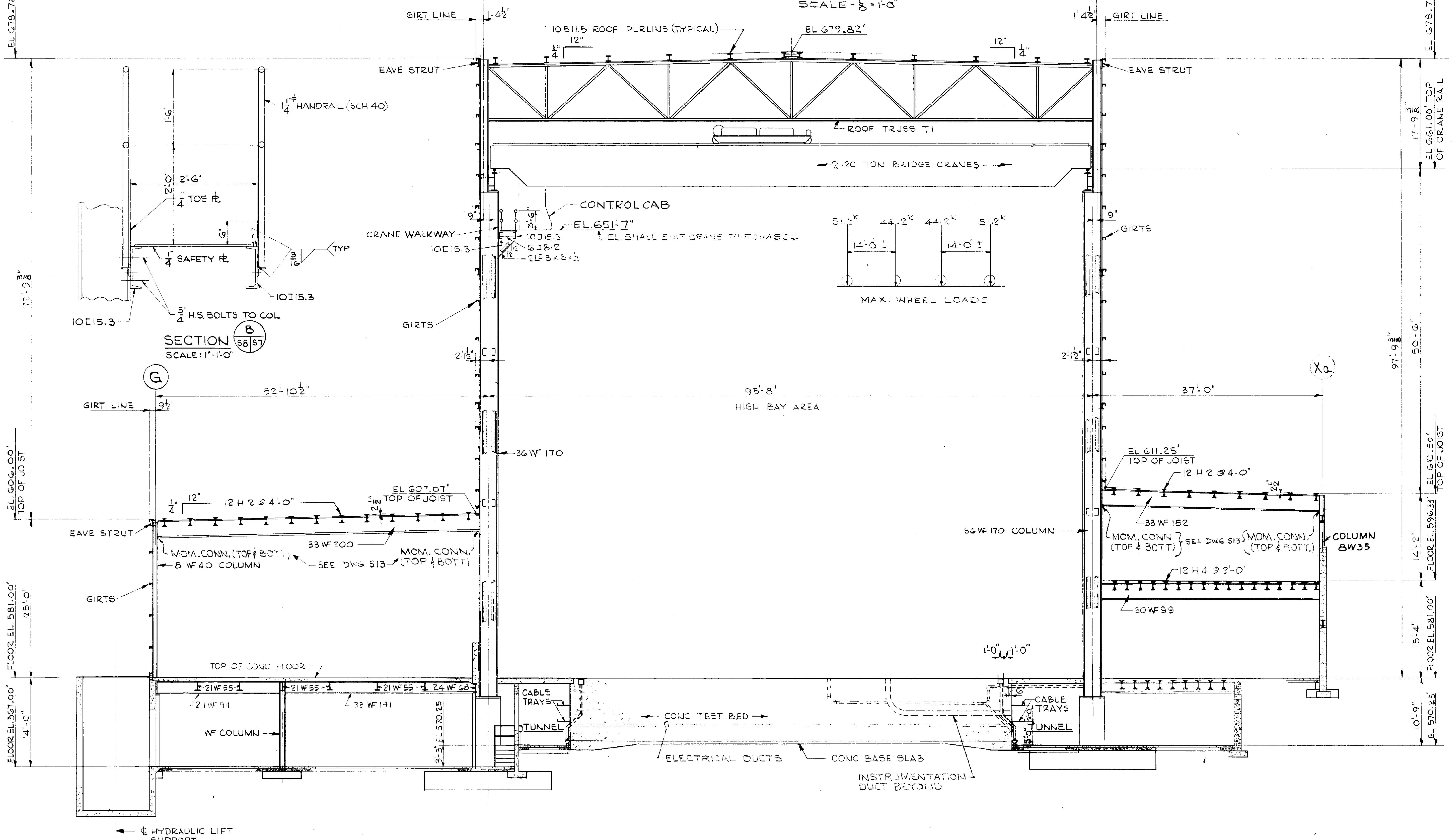

TYPICAL CROSS SECTION (LOOKING WEST)
SCALE: 1/8" = 1'-0"

STRUCTURAL STEEL NOTES

STEEL JOISTS

1. STEEL JOISTS SHALL BE OF THE OPEN WEB TRUSS TYPE, BUILT UP OF WELDED BARS OR OTHER SECTIONS AND SHALL CONFORM TO THE "STANDARD SPECIFICATIONS" AND THE "CODE OF STANDARD PRACTICE" FOR LONGSPAN AND SHORTSPAN SERIES OF THE STEEL JOIST INSTITUTE, AS AMENDED TO DATE.
2. STEEL JOISTS AND ACCESSORIES SHALL BE SUPPLIED IN ACCORDANCE WITH SIZES AND TYPICAL SPACING AS SHOWN ON THE STRUCTURAL PLANS, TOGETHER WITH SUCH JOISTS, HEADERS, AND FIXTURES AS REQUIRED UNDER PARTITIONS AND AROUND FLOOR OPENINGS AS SHOWN ON THE ARCHITECTURAL PLANS.
3. PROVIDE DIAGONAL CROSSED BRIDGING FOR STEEL JOISTS. WHERE BRIDGING IS TO BE ANCHORED AT CONCRETE WALLS PROVIDE AN INSERT IN THE CONCRETE WALL FOR WELDING THE BRIDGING TO THE INSERT.

STRUCTURAL STEEL

1. ALL STRUCTURAL STEEL, THE FABRICATION, AND ERECTION OF THE THE STRUCTURAL STEEL SHALL CONFORM TO THE "SPECIFICATION FOR THE DESIGN, FABRICATION, AND ERECTION OF STRUCTURAL STEEL FOR BUILDINGS" OF THE AMERICAN INSTITUTE OF STEEL CONSTRUCTION AS AMENDED TO DATE.
2. ALL FIELD CONNECTIONS SHALL BE 7/8"Ø HIGH TENSILE FRICTION TYPE BOLTS UNLESS NOTED. ALL SHOP CONNECTIONS SHALL BE 7/8"Ø RIVETS, OR WELDS OF EQUAL STRENGTH. ALL GIRT CONNECTIONS SHALL BE 3/4"Ø MACHINE BOLTS.
3. ALL BEAM TO COLUMN CONNECTIONS SHALL BE STANDARD WEB ANGLES CONFORM[illegible] TO TABLE I OF [illegible] OTHERWISE NOTED.
4. IN GENERAL, BEAM CONNECTIONS SHALL BE PROVIDED TO DEVELOP THE FULL STRENGTH OF THE BEAM IN BENDING DUE TO A UNIFORMLY DISTRIBUTED LOAD ON A SPAN AS INDICATED ON THE STRUCTURAL PLANS, EXCEPT AS NOTED.
5. ALL CONNECTIONS TO THE EXISTING STRUCTURE SHALL BE FIELD WELDED. ALL EXISTING SIDING SHALL BE SAW CUT NEATLY AROUND THE MEMBERS THAT WILL BE CONNECTED TO THE EXISTING STEEL.
6. ALL HANDRAIL SHALL BE 1¼"Ø PIPE WELDED, UNLESS NOTED. ALL TOE PL'S SHALL BE ¼ x 6", UNLESS NOTED.
7. ALL CONNECTIONS SHALL DEVELOP THE STRENGTH OF THE MEMBER, EXCEPT AS NOTED.
8. FOR DESIGN LIVE LOADS, SEE DWG S-10.

AS BUILT

BY	DATE	CT. NO.	APPROVED

NATIONAL AERONAUTICS AND SPACE ADMINISTRATION — M S F C, HUNTSVILLE, ALABAMA

SANDERS & THOMAS INC. POTTSTOWN PA. - WASH., D.C. - MONT., ALA.

EXTENSION OF LOAD TEST ANNEX (BUILDING NO. 4619)

SECOND FLOOR PLAN AND CROSS SECTION

NASA AE CONT. NO. NAS 8-12014 — FILE NO. MSFC 8993

SUBMITTED: W.A. Sanders P.E. — AE DATE: 12 MAY 64
APPROVAL RECOMMENDED: R.S. Garrett — LAB DATE: 6/15/64
APPROVED: Robert D. [illegible], CHIEF DESIGN BRANCH — NASA DATE: 6-16-64
DESIGNED: BH — DRAWN: BH — CHECKED: GFW-EEG — SCALE: 1/8" = 1'-0"
APPROVAL RECOMMENDED: [illegible], CHIEF STRUCTURAL SECTION — DESIGN DATE: 6-12-64 — SPEC NO. F & D-433

APPROVED FOR SAFETY — [illegible] 15 June 64 — CH. ENGR. SAFETY OFFICE — DATE

S7

DRWG. NO. F&D-C-4619-S7

4619

MSFC MASTER BID DISK 11-18-2013

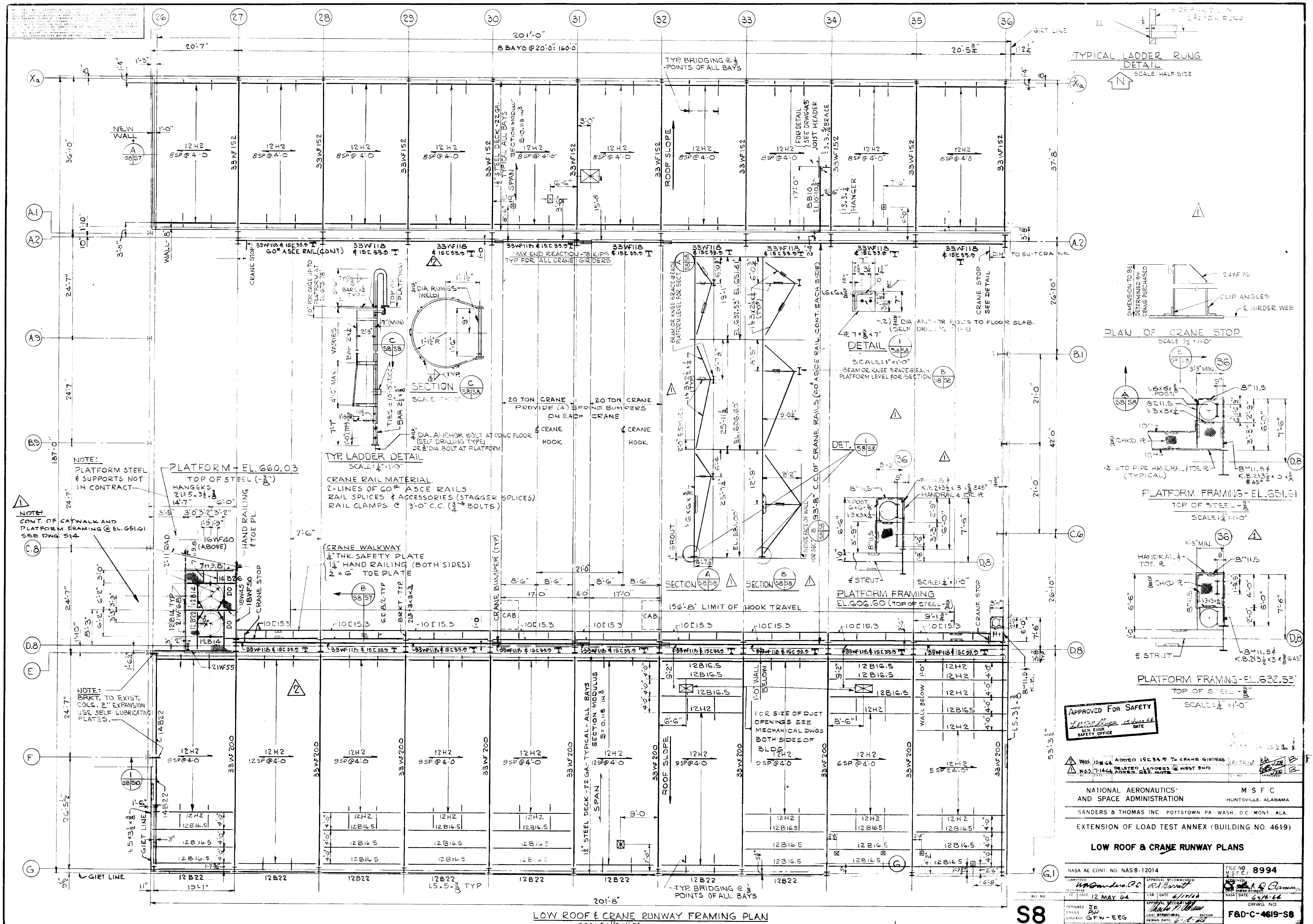
LOW ROOF & CRANE RUNWAY FRAMING PLAN
SCALE: 1/8"=1'-0"
TYPICAL LADDER RUNG DETAIL
SCALE: HALF SIZE
TYP. LADDER DETAIL
SECTION C
DETAIL
PLAN OF CRANE STOP
SCALE: 1/2"=1'-0"
PLATFORM FRAMING - EL. 651.61
PLATFORM FRAMING - EL. 632.53
PLATFORM FRAMING EL. 606.60
PLATFORM - EL. 660.03
CRANE RAIL MATERIAL
2-LINES OF 60# ASCE RAILS
RAIL SPLICES & ACCESSORIES (STAGGER SPLICES)
RAIL CLAMPS @ 3'-0" C.C. (3/4" BOLTS)
CRANE WALKWAY
1/4" THK. SAFETY PLATE
1 1/4" HAND RAILING (BOTH SIDES)
2 x 6" TOE PLATE
20 TON CRANE
PROVIDE (4) SPRING BUMPERS ON EACH CRANE
156'-8" LIMIT OF HOOK TRAVEL
NOTE: PLATFORM STEEL & SUPPORTS NOT IN CONTRACT
NOTE: CONT. OF CATWALK AND PLATFORM FRAMING @ EL. 651.61 SEE DWG. S14
NOTE: BRKT. TO EXIST. COLS. 2" EXPANSION USE SELF LUBRICATING PLATES.
FOR SIZE OF DUCT OPENINGS SEE MECHANICAL DWGS BOTH SIDES OF BLDG.
TYP. BRIDGING @ 1/3 POINTS OF ALL BAYS
201'-0"
8 BAYS @ 20'-0" = 160'-0"
201'-8"
APPROVED FOR SAFETY
NATIONAL AERONAUTICS AND SPACE ADMINISTRATION
M S F C
HUNTSVILLE, ALABAMA
SANDERS & THOMAS INC. POTTSTOWN PA. WASH. D.C. MONT. ALA.
EXTENSION OF LOAD TEST ANNEX (BUILDING NO. 4619)
LOW ROOF & CRANE RUNWAY PLANS
NASA AE CONT. NO. NAS8-12014
FILE NO. MSFC 8994
12 MAY 64
DRWG. NO. F&D-C-4619-S8
S8
SCALE 1/8"=1'-0" & NOTED
4619

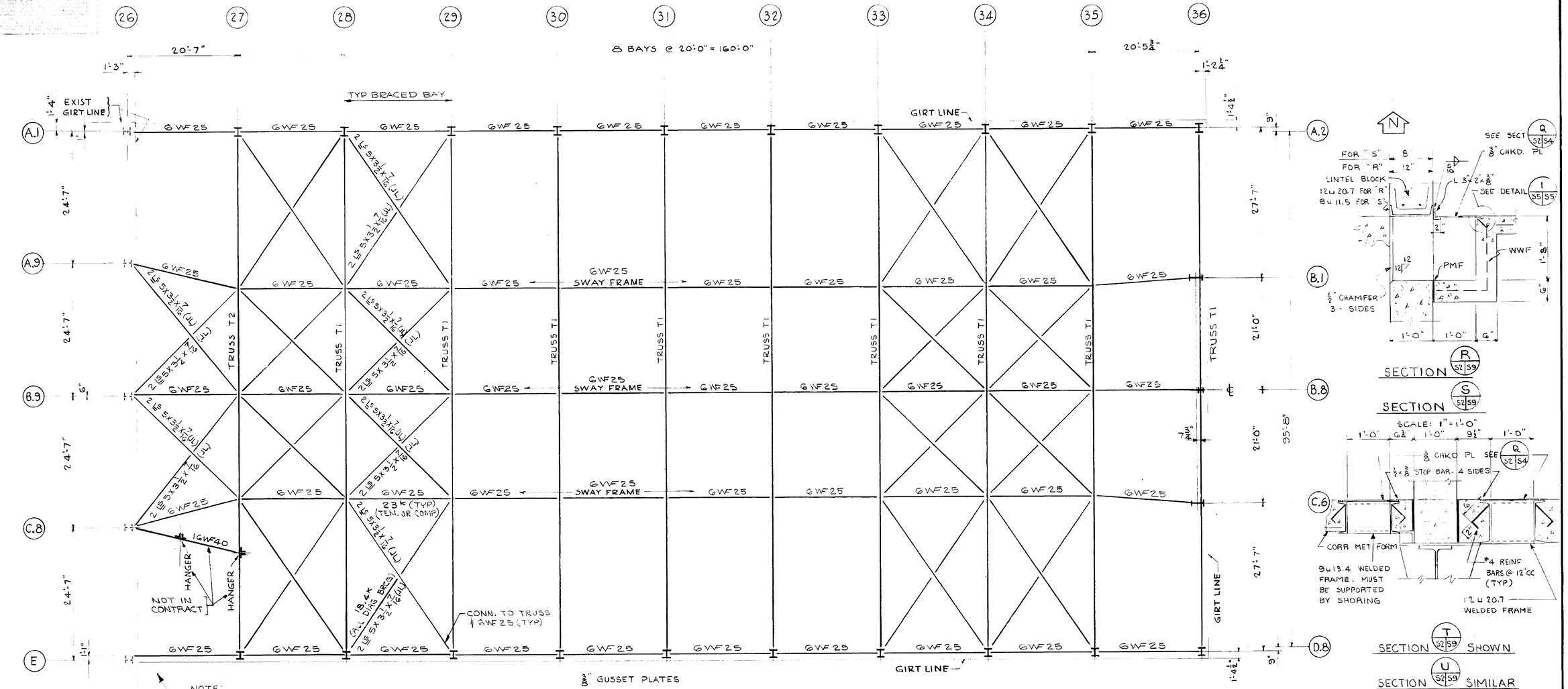

BOTTOM CHORD FRAMING PLAN

SCALE: ⅛" = 1'-0"

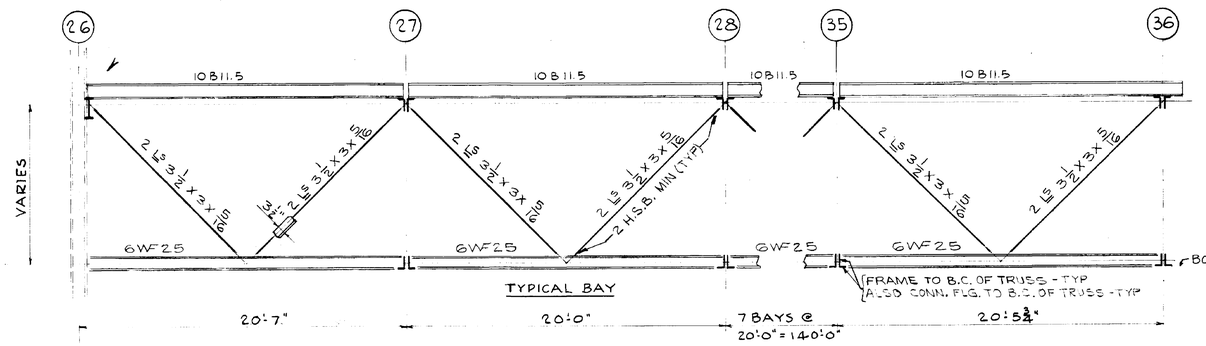

ELEVATION OF SWAY FRAMES

SCALE: ¼" = 1'-0"

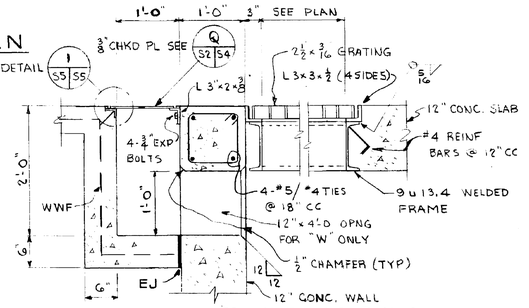

SECTION W S2 S9 SHOWN

SECTION X S2 S9 SIMILAR

SCALE: 1" = 1'-0"

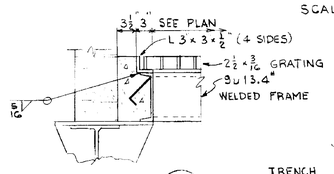

SECTION Y S2 S9

SCALE: 1" = 1'-0"

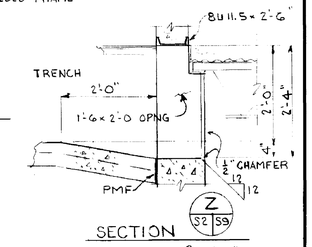

SECTION Z S2 S9

SCALE: ⅜ = 1'-0"

NATIONAL AERONAUTICS AND SPACE ADMINISTRATION — M S F C HUNTSVILLE, ALABAMA

SANDERS & THOMAS INC. POTTSTOWN — A. WASH. D.C. MONT. ALA.

EXTENSION OF LOAD TEST ANNE (BUILDING NO. 4619)

BOTTOM CHORD PLAN

APPROVED FOR SAFETY — SAFETY OFFICE — DATE

S9

NASA AE CONT. NO. NAS8-12014

DESIGN W.A. Sanders P.E. DATE 12 MAY 64

DRAWN JB

CHKD JW

CHKD GFW-EEG

SCALE AS NOTED

APPROVAL RECOMMENDED: R.A. Harrett DATE 6/15/64

APPROVED FOR CONSTRUCTION: Charles A. Whitmire CHIEF STRUCTURAL DESIGN BRANCH

DESIGN DATE 6-15-64

SPEC NO. F&D 433

FILE NO. M S F C 8995

APPROVED

OTHER DESIGN BRANCH

NASA APPROVAL DATE 6-16-64

DRWG NO. F&D-C-4619-S9

4619

MSFC MASTER BID DISK 11-18-2013

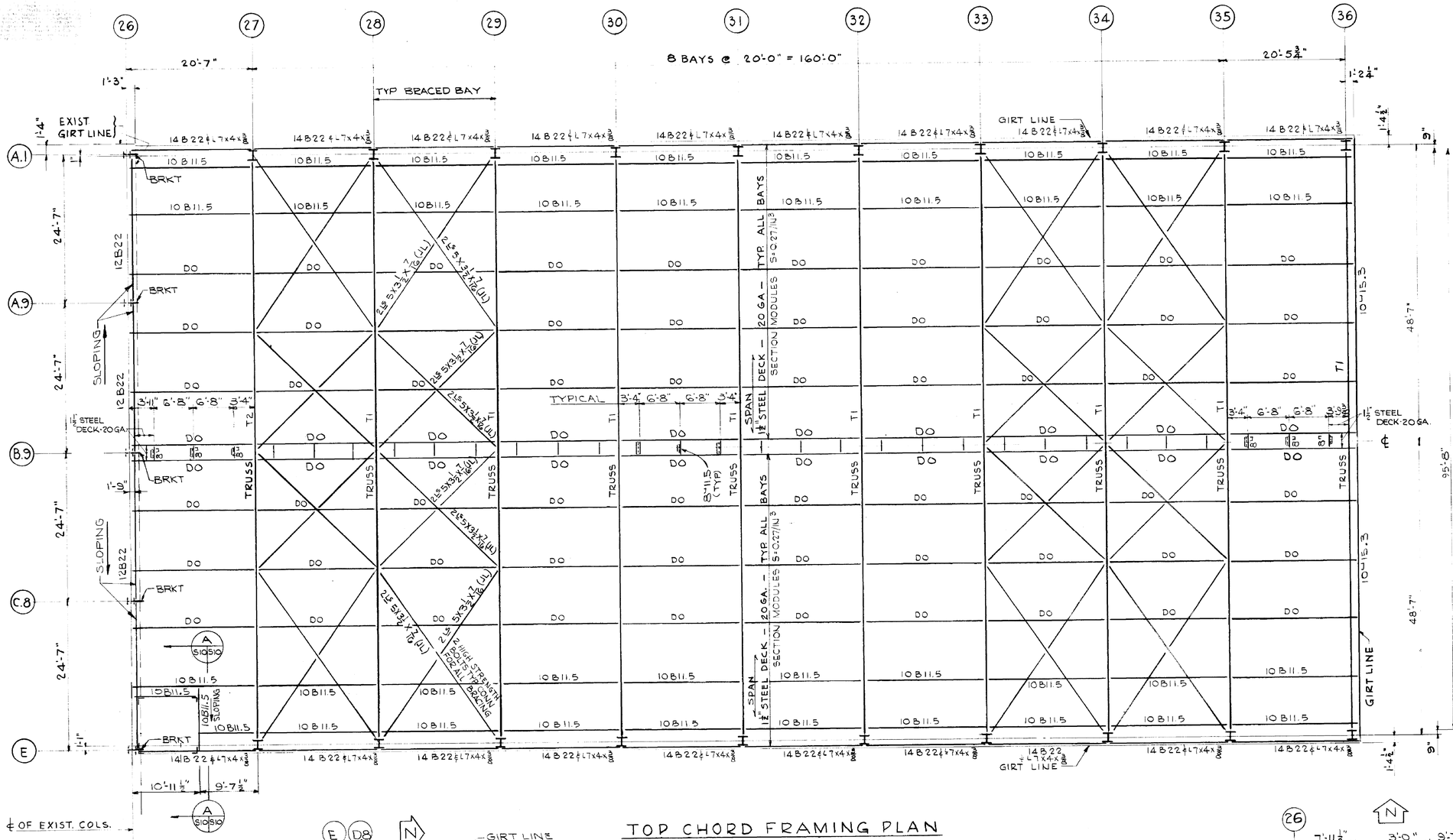

DESIGN LOADS

BASEMENT

ALLOWABLE SOIL BEARING - 3000 PSF
BASEMENT & TUNNEL FLOOR - 6000 # WHEEL LOAD
ELECTRICAL EQUIPMENT ROOM RAILS - 2000 #/FT ANY DIRECTION

1ST FLOOR

HIGH BAY - SLAB ON GROUND - 18,000 # WHEEL LOAD
SLAB OVER TUNNEL - 18,000 # WHEEL LOAD
TEST BED - HIGH LOAD POINTS
VERTICAL - UP OR DOWN 500,000 #
HORIZONTAL - ANY DIRECTION 400,000 #
NORTH LOW BAY - AREA OVER MECH. ROOM - LL 80 PSF
SOUTH LOW BAY - SLAB ON GROUND - 6000 # WHEEL LOAD
STORAGE ROOM - LL 250 PSF & 9000 # WHEEL LOAD
SHOPS - LL - 100 PSF & 9000 # WHEEL LOAD
ANECHOIC CHAMBER FLOOR - 1000 #/FT & 4000 # WHEEL LOAD ANY DIRECTION
REVERBERANT ROOM - RAILS - 5000 #/FT ANY DIRECTION
HIGH TEMP TEST ROOM - RAILS 25,000 #/FT ANY DIRECTION

2ND FLOOR

LL 80 PSF

MISCELLANEOUS

CORRIDORS, CATWALKS, PLATFORMS & STAIRS LL 100 PSF

ROOF

LL 20 PSF

TOP CHORD FRAMING PLAN

SCALE: ⅛" = 1'-0"

NOTE:
CONNECT RAFTER BRKTS & EAVE STRUTS TO EXIST. COLS. (2" EXPANSION) USE SELF LUBRICATING PLATES. SEE DETAIL 1 S10/S10

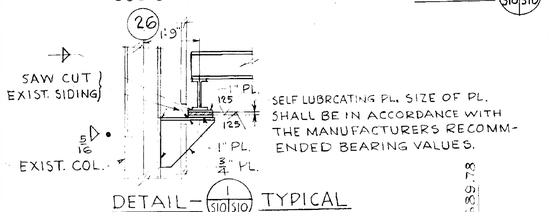

DETAIL - 1 S10/S10 TYPICAL
SCALE: 1½"=1'-0"

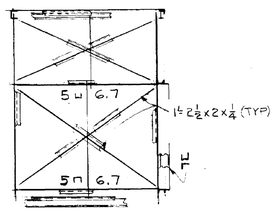

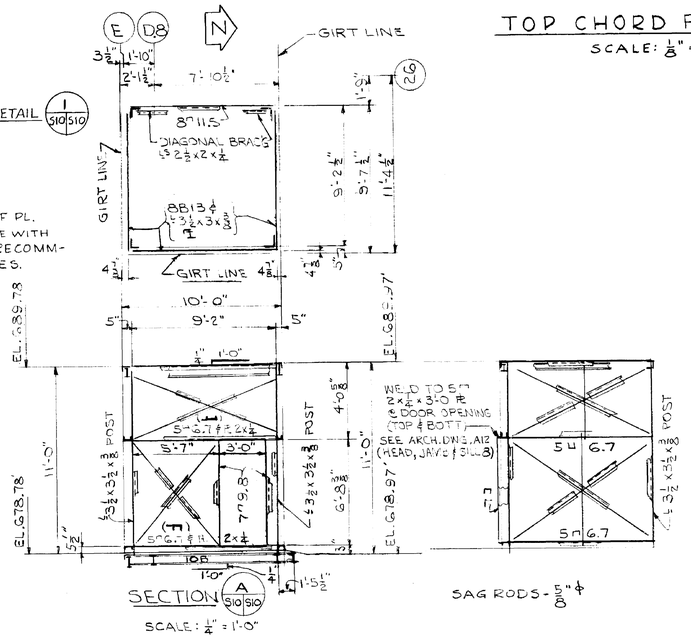

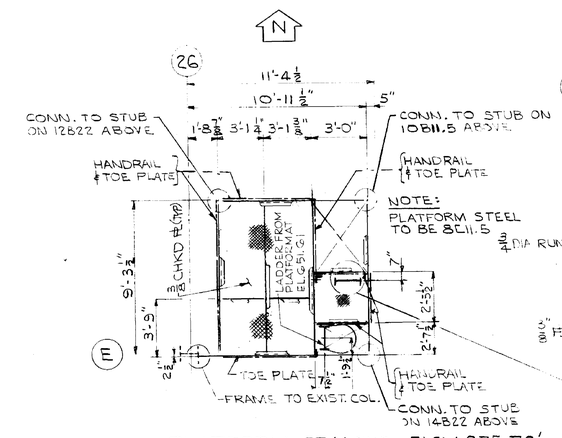

PLATFORM FRAMING - ELEV. 675.78'
TOP OF STEEL - 8"
SCALE: ¼"=1'-0"

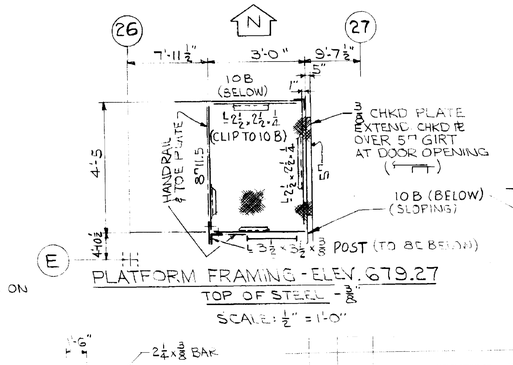

PLATFORM FRAMING - ELEV. 679.27
TOP OF STEEL - 8"
SCALE: ½" = 1'-0"

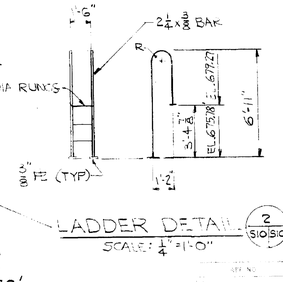

LADDER DETAIL 2 S10/S10
SCALE: ¼"=1'-0"

SAG RODS - ⅝" ℄

APPROVED FOR SAFETY
GEN. ENGR. SAFETY OFFICE
DATE

NATIONAL AERONAUTICS AND SPACE ADMINISTRATION
M S F C
HUNTSVILLE ALABAMA

SANDERS & THOMAS INC. POTTSTOWN PA WASH. D.C. MONT. ALA.

EXTENSION OF LOAD TEST ANNEX (BUILDING NO 4619)

HIGH ROOF AND TOP CHORD PLAN

NASA AE CONT. NO. NAS8-12014		I.D. NO. M.S.F.C.	8996
IDENTIFIED: W.A. Sanders P.E.	APPROVAL RECOMMENDED: R.S. Harrell	APPROVED: [illegible]	
DATE: 12 MAY 64	DATE: 6/17/64	DATE: 6-16-64	
DRAWN: JB	APPROVED FOR ADMINISTRATION: Charles H. Gibson	DWG. NO.	F&D-C-4619-S10
CHECK: GFW - EEG	CHIEF STRUCTURAL SECTION DESIGN DATE: 6-16-64		
SCALE: 1/8"=1'-0"	SPEC. NO. F & D # 433	SHEET NO.	S10

4619

MSFC MASTER BID DISK 11-18-2013

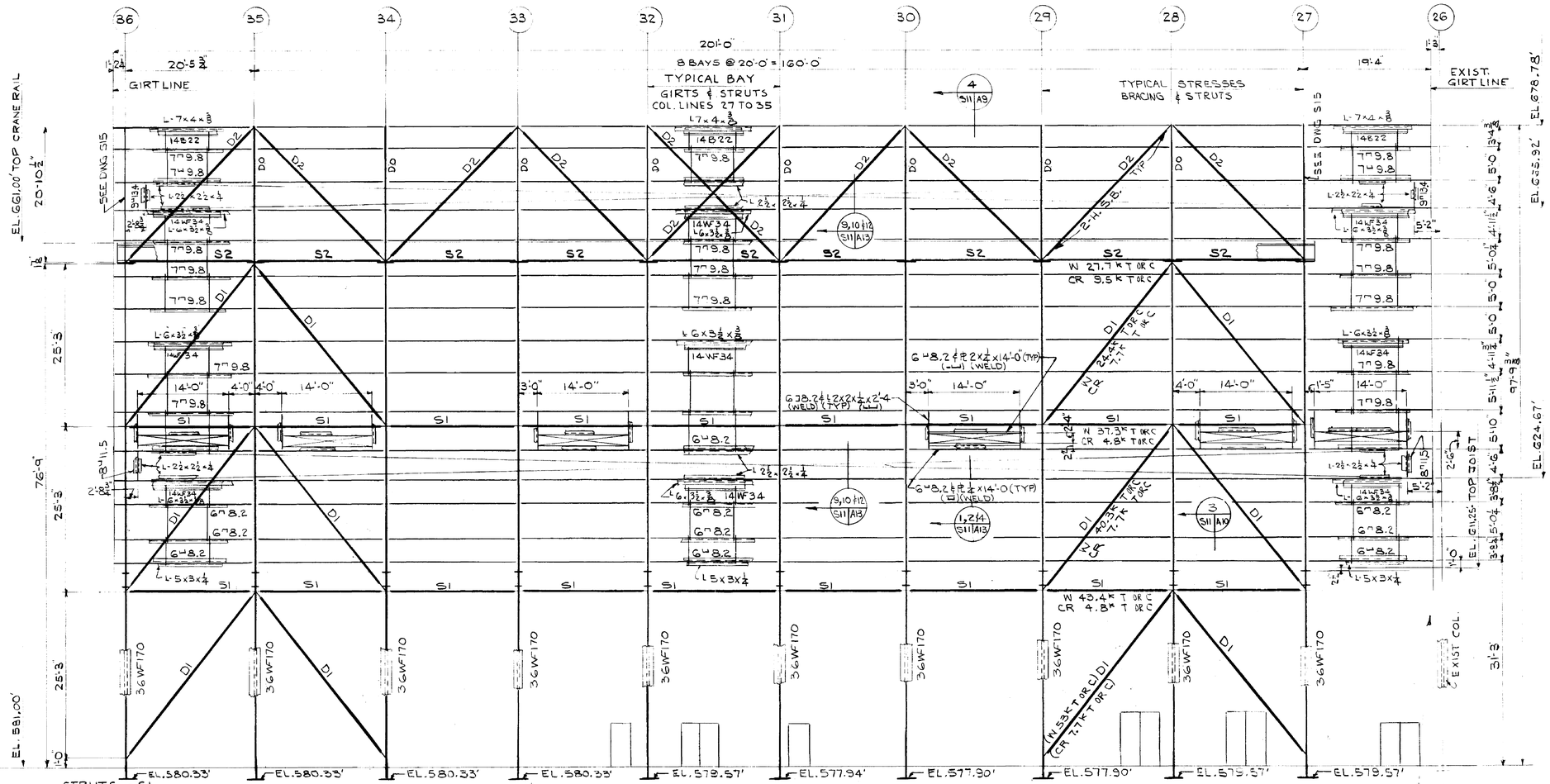

ELEVATION - NORTH WALL - HIGH BAY

SCALE - 1/8" = 1'-0"

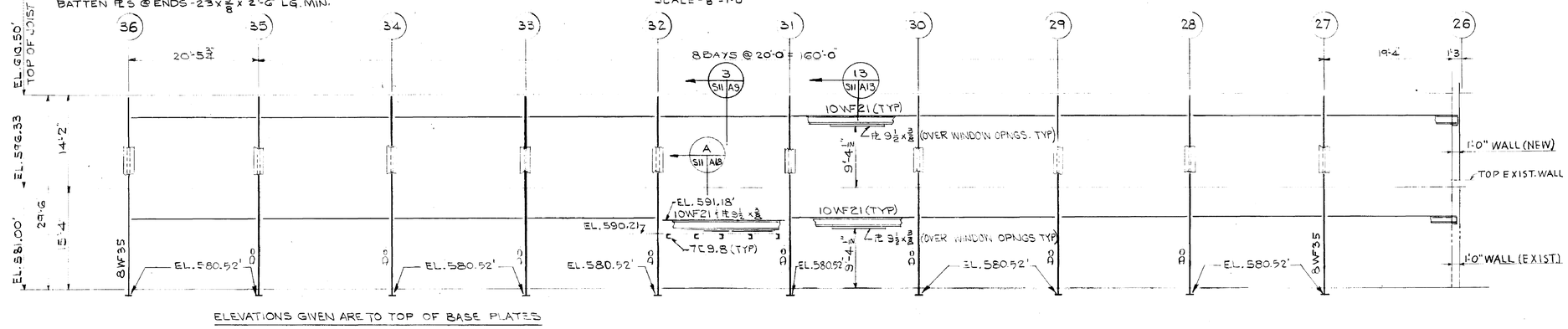

ELEVATIONS GIVEN ARE TO TOP OF BASE PLATES

ELEVATION - NORTH WALL - LOW BAY

SCALE - 1/8" = 1'-0"

APPROVED FOR SAFETY
Lewis Research Center
15 June 64
DATE

S11

NATIONAL AERONAUTICS AND SPACE ADMINISTRATION	M S F C HUNTSVILLE, ALABAMA
SANDERS & THOMAS, INC. POTTSTOWN, PA. WASH. D.C. MONT. ALA.	
EXTENSION OF LOAD TEST ANNEX (BLDG NO. 4619)	
NORTH ELEVATION	
NASA HQ CONT. NO. NAS8-11016	M S F C DWG NO. 8997
DESIGNED: Washington D.C. 12 MAY 64	APPROVED: R.P. Harnett 6/10/64
DRAWN: J.B. Link; CHECKED: GFW - EEG	APPROVED: W. A. Mrazek 6-12-64
SCALE: 1/8" = 1'-0"	SPEC. NO. F&D-433
	CHIEF, STRUCTURAL DIVISION: W. A. Mrazek 6-12-64
	CHIEF, DESIGN BRANCH: C. J. Pavlica 6-16-64
	DRWG NO. F&D-C-4619-S11

4619

MSFC MASTER BID DISK 11-18-2013

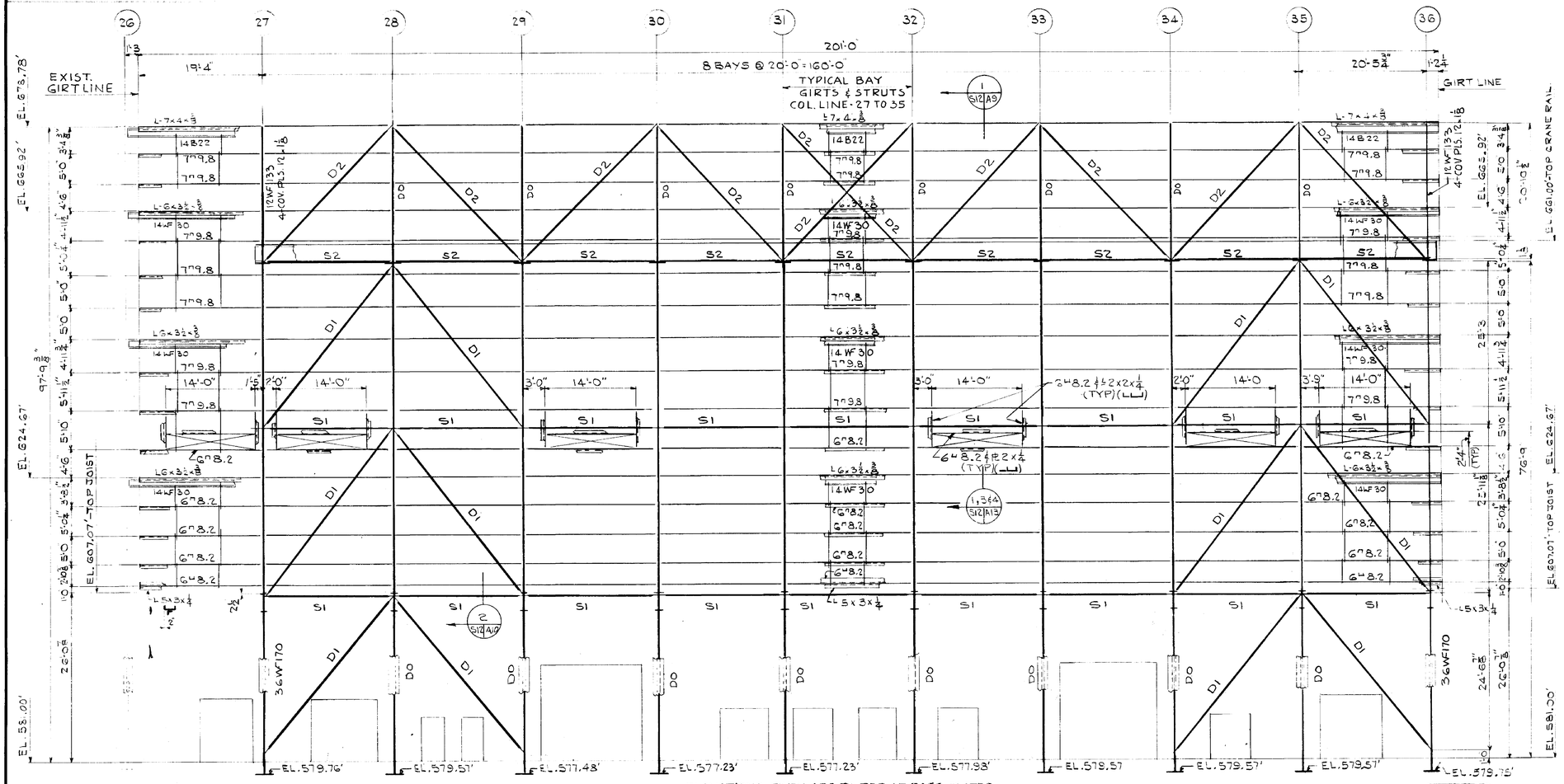

NATIONAL AERONAUTICS AND SPACE ADMINISTRATION — M S F C — HUNTSVILLE, ALABAMA

SANDERS & THOMAS, INC. — PITTSTOWN, PA. — MONTGOMERY, ALA.

EXTENSION OF LOAD TEST ANNEX (BUILDING NO. 4619)

SOUTH ELEVATION

SPACE AERONAUTICS NASS-12014		FILE NO. 8998
W.B. Sanders P.E. 12 MAY 64	R.L. Barnett 6/15/64	APPROVED 6-16-64
JB DAK GFW-EEG 1/8"=1'-0"	STRUCTURAL	OPWG. NO. F8D-C-4619-S12

APPROVED FOR SAFETY — SAFETY OFFICE — DATE 15 June 64

S12

4619

MSFC MASTER BID DISK 11-18-2013

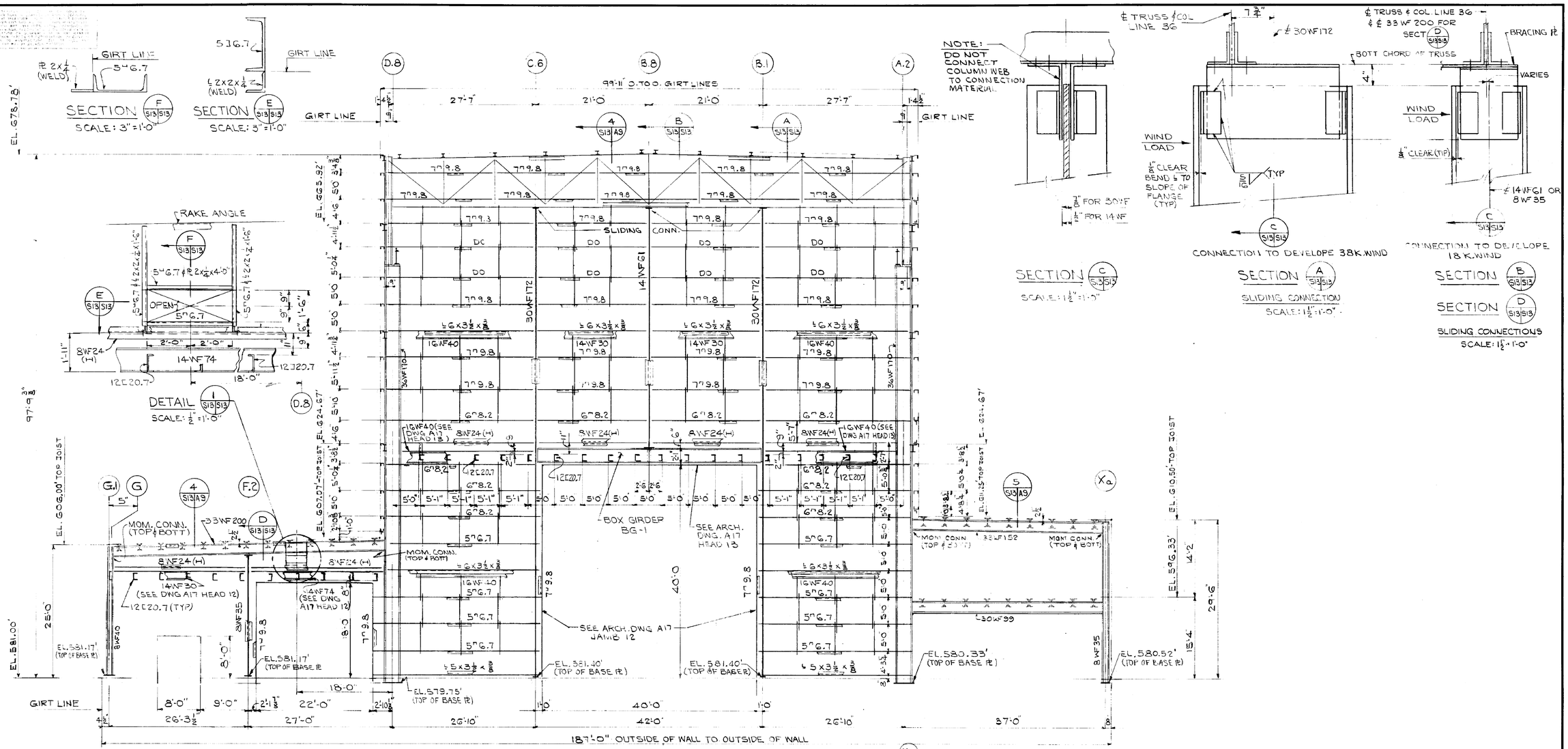

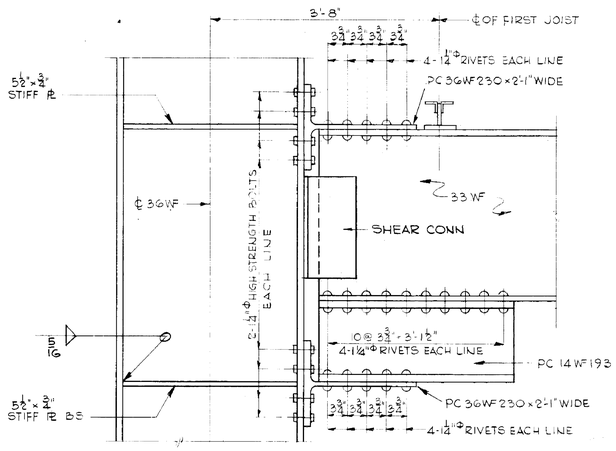

TYPICAL MOMENT CONNECTION FOR ALL BEAMS AND COLUMNS ALONG COLUMN LINES A.2 AND D.8 BETWEEN COLUMN LINES 27 AND 36

SCALE: 1"=1'-0"

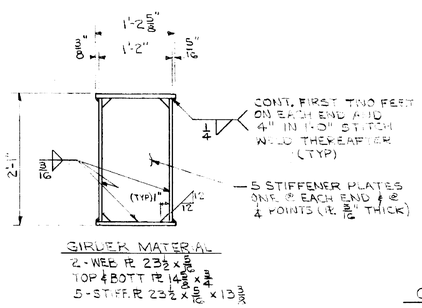

GIRDER MATERIAL

2-WEB PL 23½ × 5/16
TOP & BOTT PL 14 × 3/4
5-STIFF PL 23½ × 13

NOTE: PROVIDE CONNECTION ANGLES TO COL. WEB & GRDR. WEB AND CONNECTION ANGLES TO GRDR. FLANGE & COL. WEB FOR 8K. VERTICAL REACTION AND 15K. HORIZONTAL REACTION

BOX GIRDER BG-1

SCALE: 1"=1'-0"

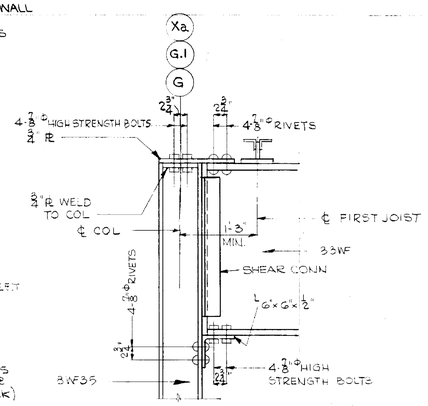

TYPICAL MOMENT CONNECTION AT ROOF

SCALE: 1"=1'-0"

NATIONAL AERONAUTICS AND SPACE ADMINISTRATION — M S F C HUNTSVILLE ALABAMA

SANDERS & THOMAS INC. POTTSTOWN PA. WASH. D.C. FORT ALA.

EXTENSION OF LOAD TEST ANNEX (BUILDING NO. 4619)

EAST ELEVATION

NASA RE. CONF. NO. NAS 8-12014 — FILE NO. M-S 8999

DESIGNED WASanders D.C. 12 MAY 64 — DETAILED R.B.Harrett 6/15/64 — CHECKED Robert D. Thomas 6-16-64

DESIGNED JB-OD — DRAWN DK — CHECKED GFW-EEG — SCALE 1/8"=1'-0"

APPROVED STRUCTURAL ENGINEER — DESIGN DATE 6-18-64 — SPEC. NO. —

DRWG NO. F&D-C-4619-S13

APPROVED FOR SAFETY — BAILEY'S OFFICE — DATE 15 June 64

S13

4619

MSFC MASTER BID DISK 11-18-2013

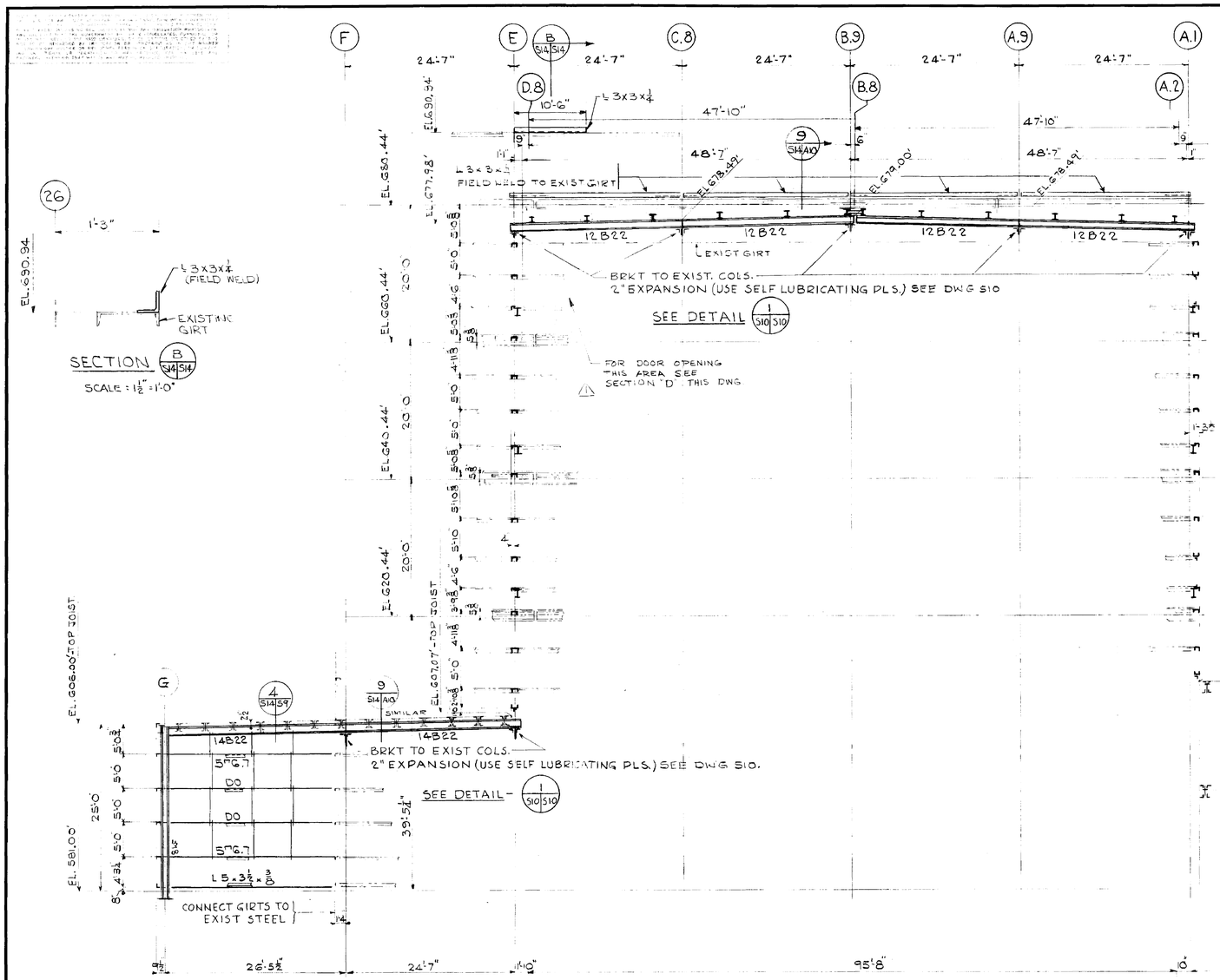

MSFC MASTER BID DISK 11-18-2013

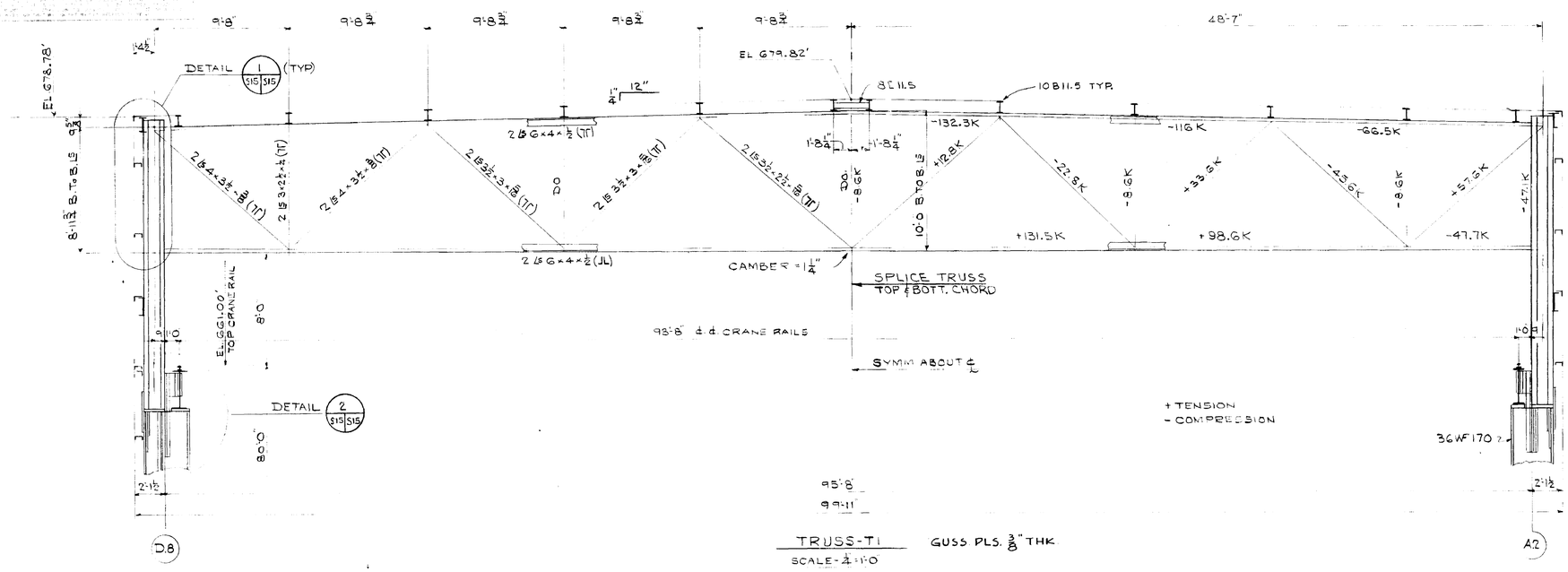

⚠ WAS 12-11-64 ADDED 15C33.9 TO CRANE GIRDER 12-17-64 CT NO. APPROVED

NATIONAL AERONAUTICS AND SPACE ADMINISTRATION — M S F C — HUNTSVILLE, ALABAMA

SANDERS & THOMAS, INC. POTTSTOWN, PA. WASH. D.C. MONT. ALA.

EXTENSION OF LOAD TEST ANNEX (BUILDING NO. 4619)

TRUSSES & MISCELLANEOUS DETAILS

NASA NI CONT. NO. NAS8-12014 — FILE NO. M S F C 9001

DESIGNED W.B.Gamble, P.E. — APPROVED FOR CONSTRUCTION R.D.Barrett DATE 6/15/64 — APPROVED Robert D. Ramsey, Jr. BY STUDY BRANCH DATE 6-16-64

DRAWN 12 MAY 64 — APPROVED FOR CONSTRUCTION Charles H. Gilliam STRUCTURAL SECTION DATE 6-17-64 — DRWG. NO. F&D-C-4619-S15

TRACED JB DJK — CHECKED GFW - EEG — SCALE AS NOTED — SPEC. NO. F&D-433

APPROVED FOR SAFETY — G.W. Bridge 15 JUNE 64 DATE — SAFETY OFFICE

S15

4619

MSFC MASTER BID DISK 11-18-2013

NOTICE — WHEN GOVERNMENT DRAWING, SPECIFICATION OR OTHER DATA IS USED FOR ANY PURPOSE OTHER THAN IN CONNECTION WITH A DEFINITELY RELATED GOVERNMENT PROCUREMENT OPERATION, THE UNITED STATES GOVERNMENT THEREBY INCURS NO RESPONSIBILITY NOR ANY OBLIGATION WHATSOEVER; AND THE FACT THAT THE GOVERNMENT MAY HAVE FORMULATED, FURNISHED, OR IN ANY WAY SUPPLIED THE SAID DRAWING, SPECIFICATION OR OTHER DATA IS NOT TO BE REGARDED BY IMPLICATION OR OTHERWISE AS IN ANY MANNER LICENSING THE HOLDER OR ANY OTHER PERSON OR CORPORATION, OR CONVEYING ANY RIGHTS OR PERMISSION TO MANUFACTURE, USE OR SELL ANY PATENTED INVENTION THAT MAY IN ANY WAY BE RELATED THERETO.

8'-2'-0"×2'-0" REMOVABLE ACOUSTICAL PANEL (BOTTOM AT ELEV 581'-0"

RETAINING WALL BELOW GRADE BEAMS

REMOVABLE PLATE

12" CONCRETE BLOCK *

CONTINUOUS BOND BEAM

RETAINING WALL BELOW GRADE BEAMS

REMOVABLE BRIDGE DECKING

SLOTTED FLOOR TRACK

13" FOAMGLASS (TYPICAL)

REMOVABLE PANEL & HORN DOOR SEE S21

CONTINUOUS BOND BEAM

12" CONCRETE BLOCK

EL 581.00'

CONCRETE GRADE BEAM

2" (FOAMGLASS)

#4@12" EW EF TYPICAL 3 WALLS EXTEND 1'-0 INTO PIERS.

VERTICAL SPRING

2×4 KEY

2×6 KEY

LENGTH OF BOTT REINF ⅓ OF SPAN
⅔ BOTT REINF EW TYP BOTH FOUNDATIONS

GIRT LINE INSULATION CORRUGATED ASBESTOS CEMENT SIDING

METAL FURRING, SPACING SHALL MATCH ADJACENT GIRT SPACING

½" CEM PLASTER

AIR SPACE (2" MIN.)

12" CONCRETE BLOCK *

* THESE MASONRY WALLS SHALL BE CONCRETE BLOCK (NO LIGHT-WEIGHT AGGREGATE BLOCK SHALL BE USED)

REMOVABLE BRIDGE DECKING (TYPICAL)

2-4" ACOUSTICAL PANELS

3 SP @ 2'-6" = 7'-6"

4 U 5.4

4 H 5.4

FLOOR PLAN

SCALE ¼"=1'-0"

BUILT UP ROOF

RIGID INSULATION

METAL DECK

12" STEEL JOISTS

33 WF BEAM

2 LAYERS ⅝" GYPSUM WALLBOARD SUSPENDED FROM STEEL JOISTS. SEE DWG NO. A-16 FOR DETAILS

3" FOAMGLASS

2-4" ACOUSTICAL PANELS (TYPICAL TOP & SIDES) SEE DETAILS DRAWING A-19

LIFTING LUGS

SLIDING DOOR HOOD SEE HEAD 12 ON DWG NO. A-17

CONTINUOUS BOND BEAM

CORRUGATED ASB CEMENT SIDING

MET. FURRING, SPACING SHALL MATCH ADJ GIRT SPACING

12" CONCRETE BLOCK

½" CEMENT PLASTER

FLASHING 8 WF 17 *
¼"×2½" BAR WELD TO PL
¾"×1½" BATT

2" BENT PLATE

½" CLEAR TYPICAL FOR WALLS & ROOFS IN BOTH ROOMS

ANECHOIC MATERIAL

ANECHOIC ROOM 111

REVERBERANT ROOM 138

#4 TIES @ 12"

1"ϕ HOIST HOOK

½×2 STEEL REINF PL. DRILL & TAP FOR ½" BOLTS @ 8" CC

ALL REINFORCING IN WALL, FLOOR & ROOF SHALL BE #4 @ 16 EACH WAY EACH FACE UNLESS NOTED.

8" ACOUSTICAL PANEL (REMOVABLE) #4 TIES @ 12"

REMOVABLE BRIDGE DECKING

EL 581.00'

10 WF 21

#4 TIES @ 12"

8" CABLE PIPE

4 JC 5.4

COMPRESSION PAD

2" CL (TYP)

#4 TIES (TYP)

PULL BOX

3" (FOAMGLASS)

#5 @ 12 EW

#4 TIES @ 14" 4-#9 EF (TYP ALL PIERS)

LENGTH OF TOP REINF ⅝ SPAN FOR ⅜ TOP REINF EW CONTINUE ⅓ ACROSS ENTIRE LENGTH AND WIDTH OF FOUNDATION

TOP OF SLAB EL 572.55

#9 @ 5 EW

#4 @ 12" EW EF ALL CONTINUOUS PIERS BOTH FOUNDATIONS

#7 @ 6" - #7 @ 7" EXTEND ½ OF BOTT REINF ACROSS ENTIRE LENGTH & WIDTH OF FOUNDATION

CONC PAD 1'-9"x23'-5"x 4" THK

#9 @ 8" EW

#7 @ 7"

#7 @ 6"

DETAIL SAME AS SILL 15 DWG A19

DOOR TRACK SEE SECT

GRADE BEAM

FOAMGLASS (TYP ALL AROUND)

#4 @ 12" EW EF (TYP 3 WALLS) EXTEND HORIZ. REINF. INTO PIERS

2" CL

1'-0

SECTION

SCALE ½"=1'-0"

DETAIL

SCALE 1"=1'-0"

¾"ϕ ANCHOR @ 12" OC WELD TO PL

½"×6" CONT PL

LIFTING LUG, WELD TO PL, 3 PER PL

34 35 36 G G.1 I

8'-4" REMOVABLE PLATE

3'-4" MO

20'-0"

5'-4"

20'-5¾"

1'-2½"

12" CONCRETE BLOCK *

RETAINING WALL BELOW GRADE BEAMS

REMOVABLE PLATE

111 16'-0"

138 15'-8"

8 U 18.75

8 U 18.75

14'-0"

SLOTTED FLOOR TRACK

REMOVABLE BRIDGE DECKING

2-4" ACOUSTICAL PANELS

13" FOAMGLASS (TYPICAL)

REMOVABLE PANEL & HORN DOOR SEE S21

CONTINUOUS BOND BEAM

12" CONCRETE BLOCK

AIR SPACE (2" MIN.)

12" CONCRETE BLOCK *

* THESE MASONRY WALLS SHALL BE CONCRETE BLOCK (NO LIGHT-WEIGHT AGGREGATE BLOCK SHALL BE USED)

GIRT LINE INSULATION CORRUGATED ASBESTOS CEMENT SIDING

METAL FURRING, SPACING SHALL MATCH ADJACENT GIRT SPACING

½" CEM PLASTER

REMOVABLE BRIDGE DECKING (TYPICAL)

3 SP @ 2'-6" = 7'-6"

4 U 5.4

4 H 5.4

FLOOR PLAN

SCALE ¼"=1'-0"

12" PIPE THRU WALL BLANK FLANGES BOTH ENDS - LOCATE AT FLOOR

FLANGE FLUSH WITH FLOOR

12" STEEL PIPE WITH BLANK FLANGES & DRAIN @ LOW POINT

8" STEEL PIPE WITH BLANK FLANGES & DRAIN @ L.P.

2'-3" SQ. PLUG IN CEILING, REMOVABLE, SEE DETAILS ON DWG A-19

ANECHOIC MATERIAL ABOVE DOOR

4" FOAMGLASS APPLY TO DOOR WITH ADHESIVE

REVERBERANT ROOM 138

PATCH PANEL SEE ELEC DWGS

8" PIPE PULL BOX

2'-3" SQ PLUG REMOVABLE, SEE DETAILS DWG A-19 IN CEILING

REMOVABLE ANECHOIC MATERIAL

ELECTRICAL OUTLETS SEE ELEC DWGS MOUNT ON 10WF21

SUPPORT LUGS IN CEILING (TYPICAL 4 PLACES)

ANECHOIC MATERIAL FLOOR, WALLS & CEILING

℄ OF CHANNEL GRID SEE FLOOR PLAN ABOVE FOR DIM

2'-3" SQ PLUG, REMOVABLE, SEE DETAILS DWG A-19

ANECHOIC ROOM 111

8"ϕ STEEL PIPE WITH BLANK FLANGES

LADDER

8'-4" DOOR OPNG

8'-10" DOOR OPNG

8'-4" DOOR OPNG

8'-0" DOOR OPNG

½"×6" CONT STEEL PL FLUSH WITH CEILING, 3 LIFTING LUGS PER PL

¾"ϕ LADDER RUNGS @ 1'-0" OC FULL HEIGHT OF REVERBERANT ROOM WALL

2'-3" SQ PLUG REMOVABLE SEE DETAILS DWG A-19

UTILITY PLAN

SCALE ¼"=1'-0"

REMOVABLE BRIDGE DECKING (TYP) 2½"×⅜ BAG BARS 2½" OC

2½"×½" BAR (CONT)

4 H 5.4

10 WF 21 BEYOND

4 JC 5.4

DETAIL

SCALE: 3"=1'-0"

6 U 18.0

8 C 18.75 (TYP)

½" STIFF PL 12" CC

12"×½" PL (CONT)

1" ANCHORS @ 12" CC

SECTION

SCALE: 1½"=1'-0"

MK	BY	DATE	REVISION	C.I. NO.	APPROVED
3	WAS	4-5-65	HORN DOOR & REMOVABLE PANEL ADDED	12072-7	
2	J D	3/1/65	REMOVED 3" AIR LINE	12072-6	
1	J.L.B	11/29/65	ADDED SECT E & F, REMOVED HORIZ. SPRING, REVISED DIM. & ADDED NOTES.	12072-4	

NATIONAL AERONAUTICS AND SPACE ADMINISTRATION — M S F C — HUNTSVILLE, ALABAMA

SANDERS & THOMAS INC. POTTSTOWN PA. · WASH., D.C. · MONT., ALA.

EXTENSION OF LOAD TEST ANNEX (BUILDING NO. 4619)

ANECHOIC & REVERBERANT ROOMS PLAN & SECTIONS

NASA AE CONT. NO. NAS 8-12014 — FILE NO M S F C 9002

SUBMITTED W.A. Sanders P.E. 12 MAY 64

APPROVAL RECOMMENDED: R.H. Barnett, CHIEF DESIGN BRANCH, I&B DATE 6/15/64

APPROVED: J. W. Fletcher, NASA DATE 6-18-64

DESIGNED EEG DRAWN RPH-JH CHECKED GFW-EEG

APPROVAL RECOMMENDED: Mark W. Chase, CHIEF STRUCTURAL SECTION, DESIGN DATE 6-12-64

DRWG. NO. F&D-C-4619-S16

SCALE AS NOTED — SPEC NO. F & D-433

APPROVED FOR SAFETY — Lt. Col. USAF 15 June 64 — U.S.A.F.C.O. SAN CITY OFFICE DATE

S16

4619

MSFC MASTER BID DISK 11-18-2013

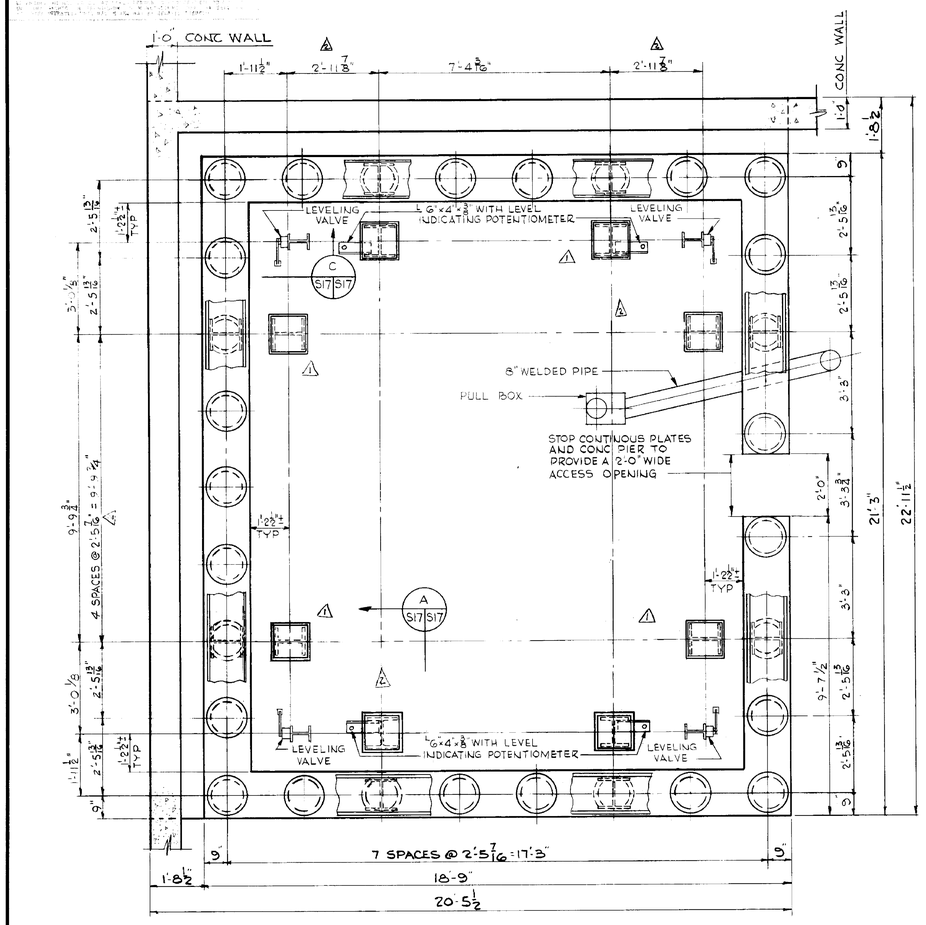

PLAN OF AIR SPRINGS - ANECHOIC ROOM
SCALE: ½"=1'-0"

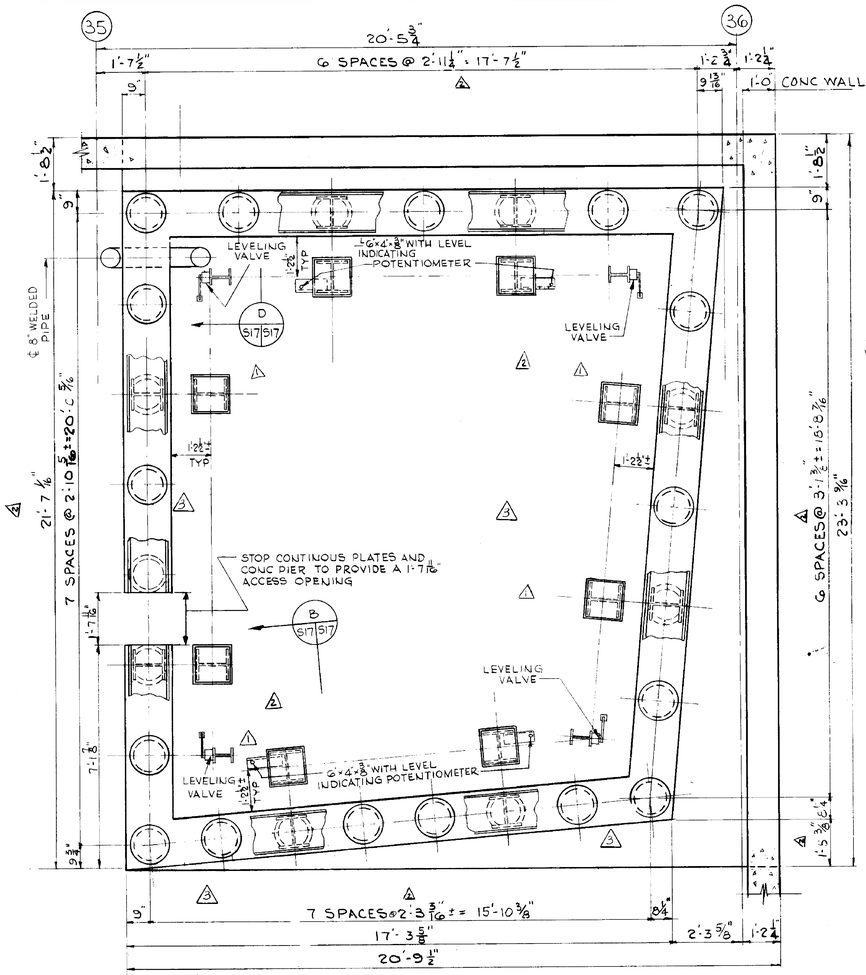

PLAN OF AIR SPRINGS - REVERBERANT ROOM
SCALE: ½"=1'-0"

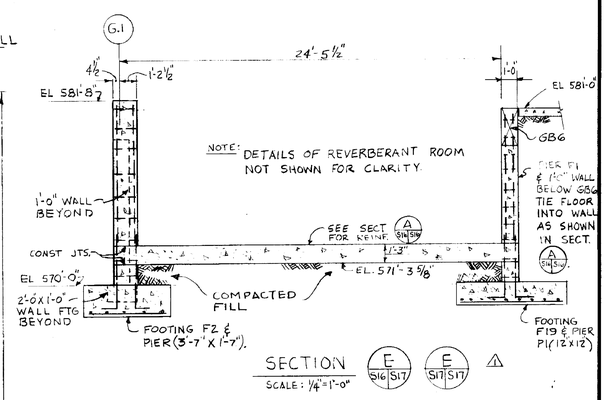

SECTION E S16|S17 E S17|S17
SCALE: ¼"=1'-0"

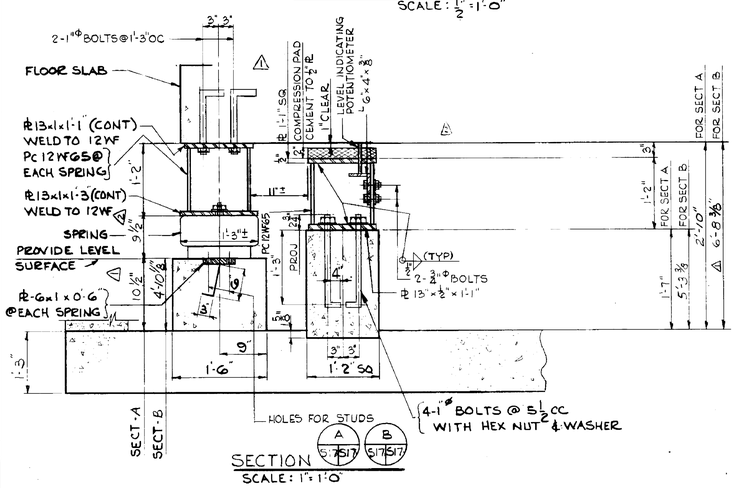

SECTION A S17|S17 B S17|S17
SCALE: 1"=1'-0"

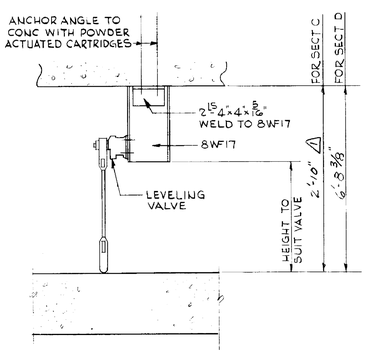

SECTION C S17|S17 D S17|S17
SCALE: 1"=1'-0"

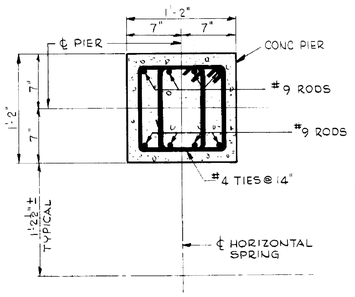

TYPICAL SECTION THRU CONCRETE PIER
SCALE: 1½"=1'-0"

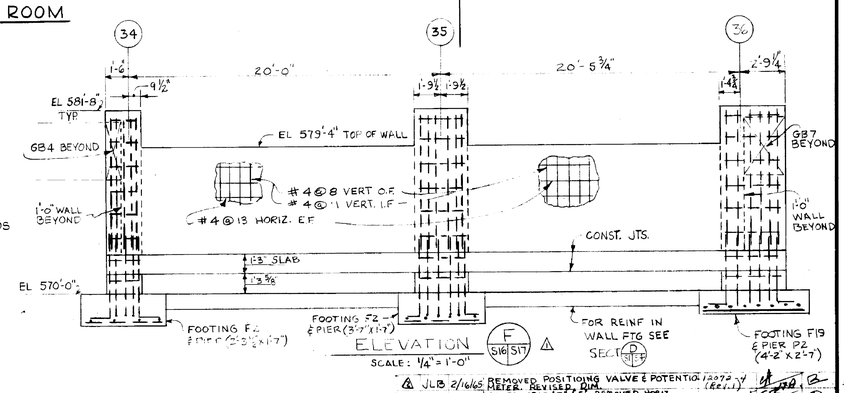

ELEVATION F S16|S17 F S17|S17
SCALE: ¼"=1'-0"

REV.	BY	DATE	DESCRIPTION	C.T. NO.	APPROVED
2	JLB	2/16/65	REMOVED POSITIONING VALVE & POTENTIOMETER, REVISED SECT A, REVISED DIM.	12072 (REV.1)	
1	JLB	11/29/64	ADDED SECT F-F, REMOVED HORIZ. SPRING & REVISED DIM.	12072-1	

NATIONAL AERONAUTICS AND SPACE ADMINISTRATION — M S F C — HUNTSVILLE, ALABAMA

SANDERS & THOMAS INC. POTTSTOWN PA. WASH. D.C. MONT. ALA.

EXTENSION OF LOAD TEST ANNEX (BUILDING NO. 4619)

ANECHOIC & REVERBERANT ROOM DETAILS

REV.	BY	DATE	DESCRIPTION	C.T. NO.	APPROVED
3	JD	9/4/65	REMOVED 3" AIR LINE	12072-6	

NASA AE CONT NO. NAS8-12014 — FILE NO. M S F C

ARCHITECT: W. Saunders P.E. — ARCH. DATE: 12 MAY 1964

STRUCTURAL: R.A. Barrett — STR. DATE: 6/10/66

DESIGN DATE: 6-12-66

CHECKED: Robert O. Ramsay Jr. — CHECK DATE: 6-16-66

APPROVED: Charles F. Adams — DRWG. NO. F&D-C-4619-S17

SPEC. NO. F&D 433

ELEC: EEG — MECH: RBH — STRUCT: GFW - EEG — AS NOTED

Approved For Safety — 12 June 66 — DATE — SAFETY OFFICE

S17

4619

MSFC MASTER BID DISK 11-18-2013

NOTE: * CONTRACTOR SHALL VARY DIMENSIONS TO SUIT EQUIPMENT

8WF40 - BASE PL 12"×12"×1/2" LEVELING PL 12"×4"×1/2" PIER 14"×14" WITH 4-#7 AND #4 TIES @ 12" FOOTING - 3'-9" SQ×1'-0" 7-#4 EW TYPICAL FOR 3 COLS EL TOP OF FOOTINGS 577.50'

℄ COL SOUTH WALL OF LOAD TEST ANNEX

℄ STORAGE BINS AND SCREW CONVEYOR

℄ COL SOUTH WALL OF LOAD TEST ANNEX

℄ ELEVATOR

℄ STORAGE BIN

LADDER FOUNDATION

10'-6" × 4'-0" FOUNDATION BY MATERIALS HANDLING CONTRACTOR

℄ COL EAST WALL OF LOAD TEST ANNEX

℄ STORAGE BIN (TYPICAL) 45° 22°30'

LADDER & CAGE

8WF17 ABOVE

8WF40

10C15.3

8C11.5

8WF17

15'-0" I.D.

GE8.2

STEEL GRATING

CONT 12" PIPE RAILING

10C15.3 KNEE BRACE @ 45°

8C11.5 KNEE BRACE @ 45°

EL. 581.00

FIN GRADE

1" CL

1½" CL

3'-0"

1'-6"

3'CL

E S18 S18

SECTION

SCALE: ½"=1'-0"

NOTE: ALL REINFORCING SHALL BE #4 @ 12"

A S18 S18

F

26

9'-0"

11'-0"

18'-0"

5'-7½"

6'-0"

4'-0"

3'-6"

10'-6"

2'-10"

2'-6"

2'-9"

3'-0"

1'-6"

8"

2'-0"

5'-9"*

3'-4½"

2'-4½"

1'-8"

11'-7½"

4'-7½"

5'-2½"

12'-9½"

12'-9¾"

15'-0" I.D.

8WF17

10C15.3

GE8.2

STEEL GRATING

CONT 12" PIPE RAILING

PLATFORM PLAN

SCALE: ½"=1'-0"

FOUNDATION PLAN

SCALE: ¼"=1'-0"

℄ 12 WF COL

BASE PL 20"×½"×1'-8"

LEVELING PL 20"×½"×1'-8"

3" PROJECTION

GROUT

EL. 581.00'

1" Φ ANCHOR BOLTS

2'-6" DIA

TOP OF ROCK

33'-0" MAX (VARIES)

32'-6"

32'-0"

1'-0"

2'-2"

6"

TYPICAL SECTION THRU CAISSON

SCALE: ¾"=1'-0"

8WF40

LADDER & CAGE

10C15.3

8C11.5

S.T. 8WF20

S.T. 8WF24.5

1¼" STEEL GRATING

HANDRAIL & TOE PLATE

7'-6" R.

℄ STORAGE BIN & SCREW CONVEYOR

PLATFORM FRAMING - ELEV. 607.93'

ELEV. TOP OF STEEL - 1½"

SCALE: ¼"=1'-0"

℄ COL SOUTH WALL OF LOAD TEST ANNEX

℄ ELEVATOR

℄ STORAGE BIN

℄ STORAGE BIN

9'-0"

11'-0"

18'-0"

2'-6"

8WF17

EL 634.93'

TOP OF STEEL GRATING

3'-0"

EL 627.59'

7'-4"

10C15.3

8WF17

RAILING BOLTED TO GE

GE8.2

HANGER

3'-2⅜"

¼" PL

CAGE

27'-0"

27 SPACES @ 1'-0" = 27'-0"

EL 607.93'

LADDER

7'-0"

8C11.5

L 6×4×⅜"

℄ COL SPLICE

46'-7⅛"

8WF40

12WF27 (TYP)

26'-1⅛"

26 SPACES @ 1'-0" = 26'-0"

3 GUSSET PL @ 1'-0" DEEP @ EACH COL

ALL BRACING 5"×2½"×¼" TYPICAL BETWEEN ALL COLS 12WF92 (TYP)

ALL BRACING 5"×2½"×¼" TYPICAL BETWEEN COLS

EL 581.00'

3'-9" SQ

SECTION

SCALE: ½"=1'-0"

ELEVATION

SCALE: ¼"=1'-0"

6B12 OR ¼" BS

SECTION AS SHOWN

SECTION SIMILAR

SCALE: ½"=1'-0"

TANK SHELL PL

℄ 12 WF COL

TYPICAL DETAIL OF WELDING COLUMN TO TANK SHELL

SCALE: 1½"=1'-0"

NOTES:

1. ALL ITEMS OF CONSTRUCTION ON THIS DWG. NOT IN CONTRACT.
2. FOR CONCRETE NOTES SEE DWG S1
3. FOR STRUCTURAL STEEL NOTES SEE DWG S7

APPROVED FOR SAFETY

Lillie C. Clegg 15 June 64

CH. ENGR. SAFETY OFFICE — DATE

NATIONAL AERONAUTICS AND SPACE ADMINISTRATION — M S F C — HUNTSVILLE ALABAMA

SANDERS & THOMAS INC. POTTSTOWN PA. WASH. D.C. MONT. ALA.

EXTENSION OF LOAD TEST ANNEX (BUILDING NO. 4619)

LEAD SHOT HANDLING SYSTEM STORAGE TANKS DETAILS

CONTRACT NO. NAS 8-12014

DESIGNED W. Saunders, D.C. 12 MAY 64

DRAWN M. KOVACH

CHECKED GFW-EEG

TRACED

SPECS. NO. F&D 433

APPROVED FOR CONSTRUCTION: R.J. Garrett 6/15/64

APPROVED: Robert O. Hammond 6-16-64

STRUCTURAL SECTION

DESIGN DATE 6-12-64

FILE NO. 9003

DRWG. NO. F&D-C-4619-S18

SCALE AS NOTED

S18

4619

MSFC MASTER BID DISK 11-18-2013

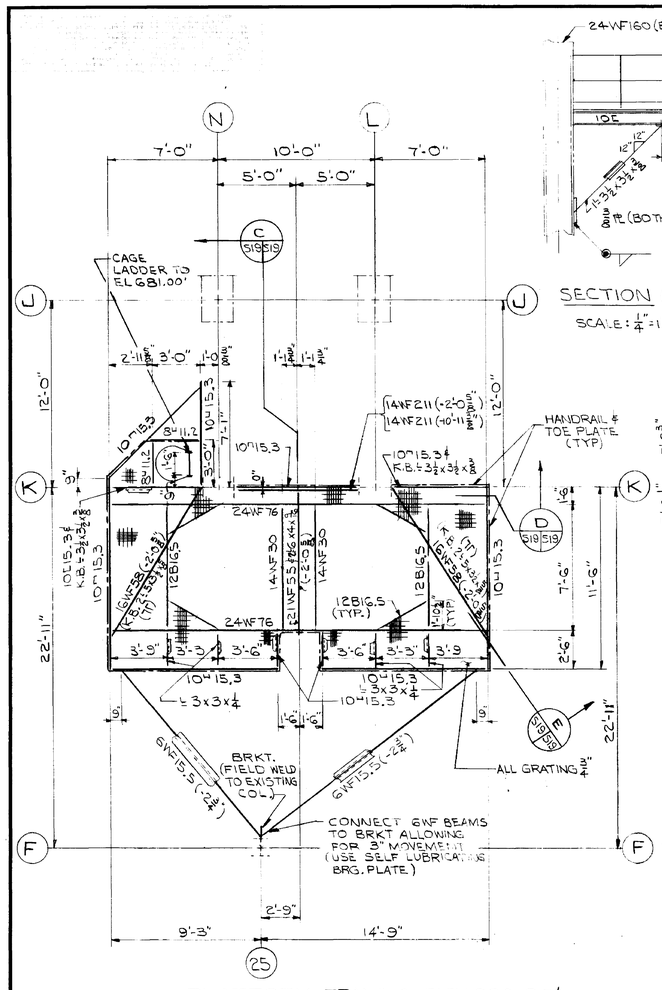

SECTION D S19 S19

SCALE: 1/4" = 1'-0"

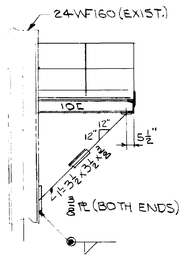

PLATFORM FRAMING - ELEV. 696.06'

TOP OF STEEL - 3/4" (UNLESS NOTED)

SCALE: 1/4" = 1'-0"

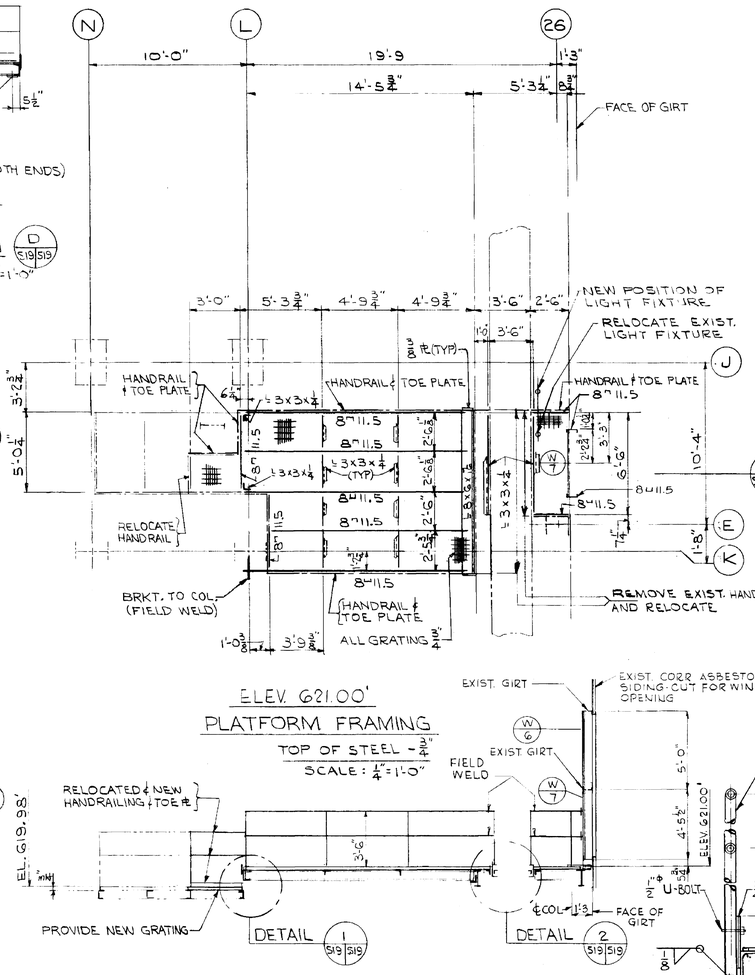

ELEV. 621.00'
PLATFORM FRAMING

TOP OF STEEL - 3/4"

SCALE: 1/4" = 1'-0"

SECTION A S19 S19

SCALE: 1/4" = 1'-0"

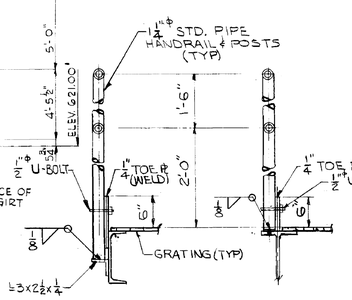

TYPICAL HANDRAILING DETAILS

SCALE: 1" = 1'-0"

WINDOW ELEVATIONS A S19 S19

SCALE 1/4" = 1'-0"

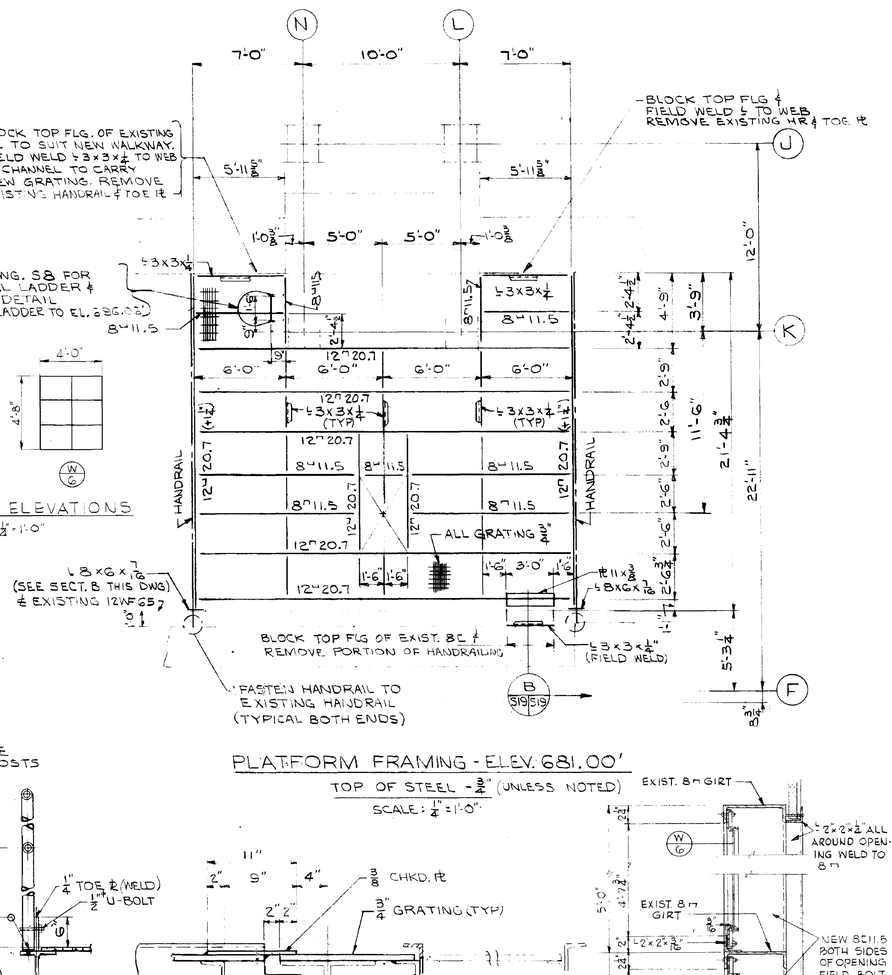

PLATFORM FRAMING - ELEV. 681.00'

TOP OF STEEL - 3/4" (UNLESS NOTED)

SCALE: 1/4" = 1'-0"

SECTION THRU WINDOW W 6 & W 7

SCALE: 1 1/2" = 1'-0"

JAMB IS SIMILAR TO HEAD AND SILL

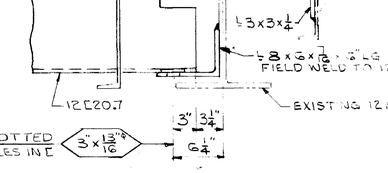

SECTION B S19 S19

SCALE: 1 1/2" = 1'-0"

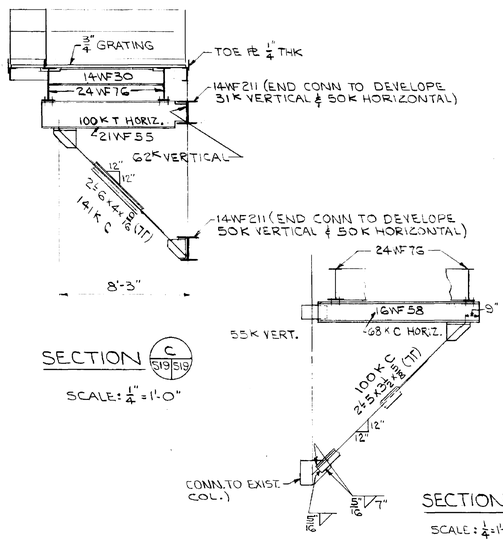

SECTION C S19 S19

SCALE: 1/4" = 1'-0"

SECTION E S19 S19

SCALE: 1/4" = 1'-0"

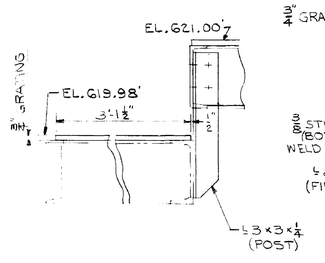

DETAIL 1 S19 S19

SCALE: 1 1/2" = 1'-0"

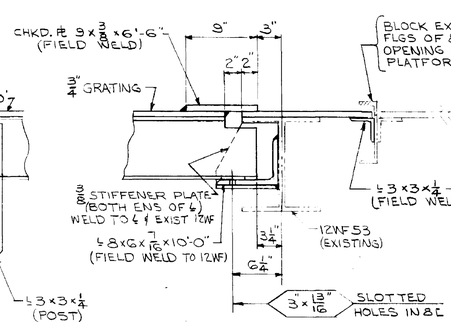

DETAIL 2 S19 S19

SCALE: 1 1/2" = 1'-0"

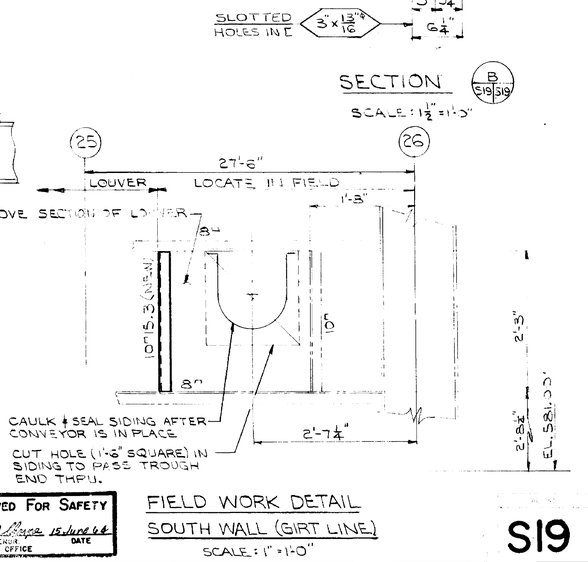

SECTION 25 26

SCALE: 1" = 1'-0"

APPROVED FOR SAFETY

L.D. Phipps 15 June 64

L.D. PHIPPS SAFETY OFFICE — DATE

FIELD WORK DETAIL
SOUTH WALL (GIRT LINE)

SCALE: 1" = 1'-0"

NOTE:
ALL ITEMS OF CONSTRUCTION ON THIS DRAWING ARE NOT IN CONTRACT.

NATIONAL AERONAUTICS AND SPACE ADMINISTRATION — M S F C — HUNTSVILLE ALABAMA

SANDERS & THOMAS INC. POTTSTOWN PA. WASH. D.C. AUST. MIA.

EXTENSION OF LOAD TEST ANNEX (BUILDING NO. 4619)

LEAD SHOT STORAGE SYSTEM
MISCELLANEOUS DETAILS

NAVY AE (CNT) NO. N456-12014

DESIGNED	W.A. Sanders P.C.	DRAWN	R.B. Marrett
DATE	12 MAY 64	DATE	6/15/64
SCALE	E.G. J.U.D. GFW-EEG AS NOTED	STRUCTURAL	Charles F. Stowe
DATE		DATE	6-12-64
SPEC. NO.	S.C. 833		

LEAD ENGINEER: Robert D. Campney
DATE: 6-16-64
DRAWING NO.: F8D-C-4619-S19

S19

4619

MSFC MASTER BID DISK 11-18-2013

NOTICE. — WHEN GOVERNMENT DRAWINGS, SPECIFICATIONS, OR OTHER DATA ARE USED FOR ANY PURPOSE OTHER THAN IN CONNECTION WITH A DEFINITELY RELATED GOVERNMENT PROCUREMENT OPERATION, THE UNITED STATES GOVERNMENT THEREBY INCURS NO RESPONSIBILITY NOR ANY OBLIGATION WHATSOEVER; AND THE FACT THAT THE GOVERNMENT MAY HAVE FORMULATED, FURNISHED, OR IN ANY WAY SUPPLIED THE SAID DRAWINGS, SPECIFICATIONS OR OTHER DATA IS NOT TO BE REGARDED BY IMPLICATION OR OTHERWISE AS, IN ANY MANNER LICENSING THE HOLDER OR ANY OTHER PERSON OR CORPORATION, OR CONVEYING ANY RIGHTS OR PERMISSION TO MANUFACTURE, USE OR SELL ANY PATENTED INVENTION THAT MAY IN ANY WAY BE RELATED THERETO.

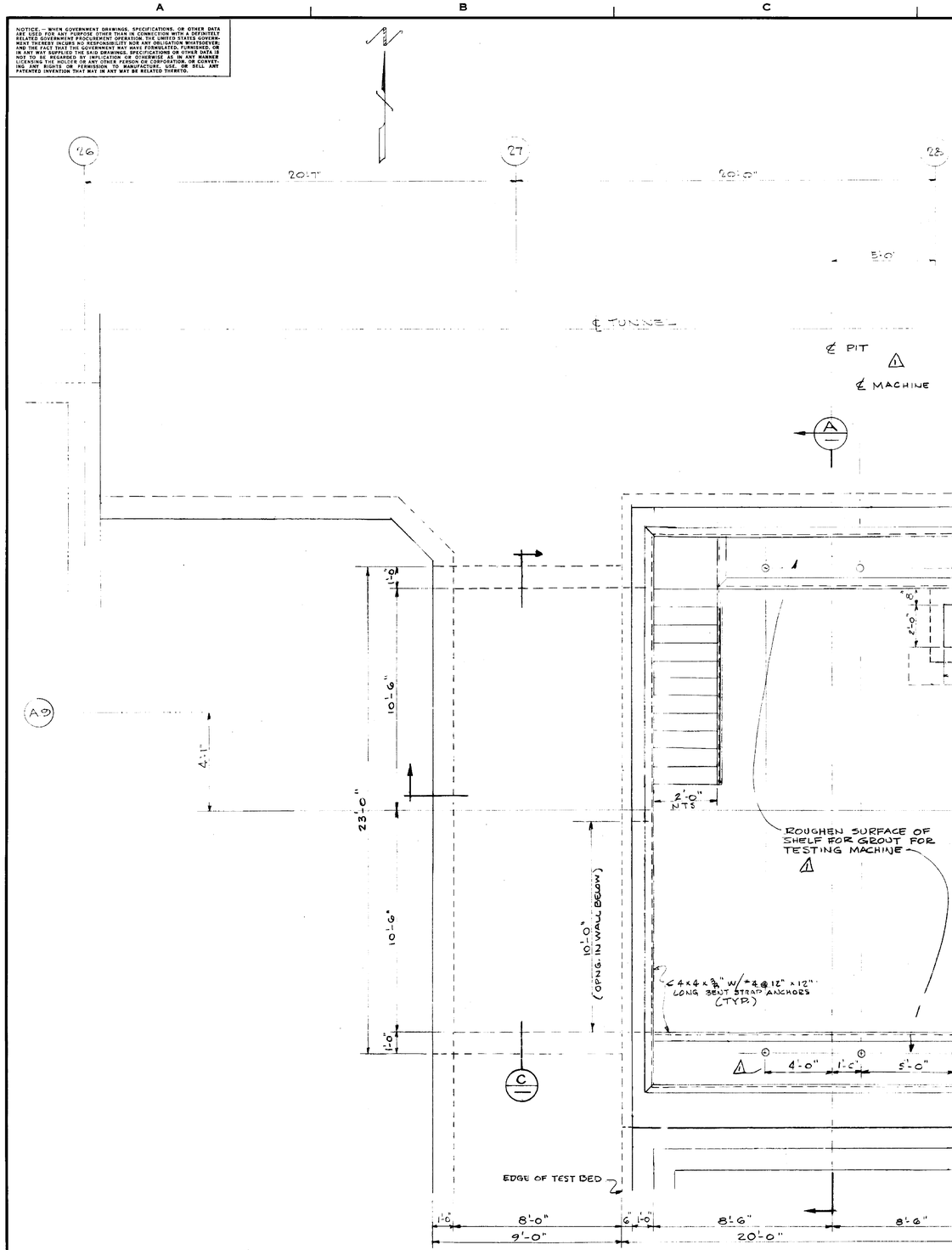

PLAN
SCALE 3/8"=1'-0"

NOTE
FOR ELECTRICAL CONDUIT LOCATION SEE F&D-C-4619 E4

1

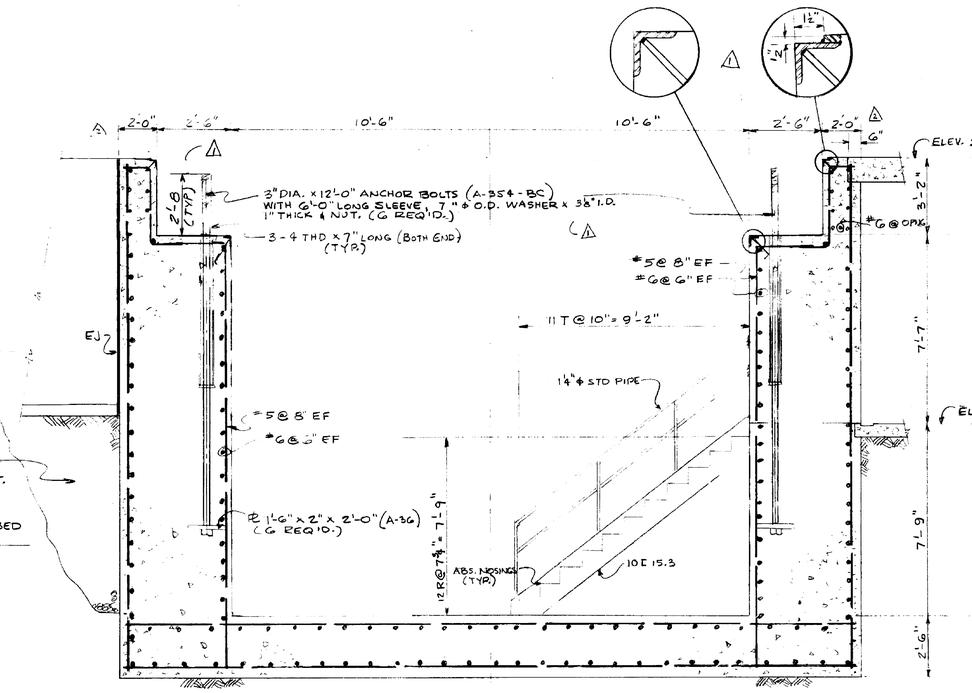

SECTION
SCALE 3/8"=1'-0"

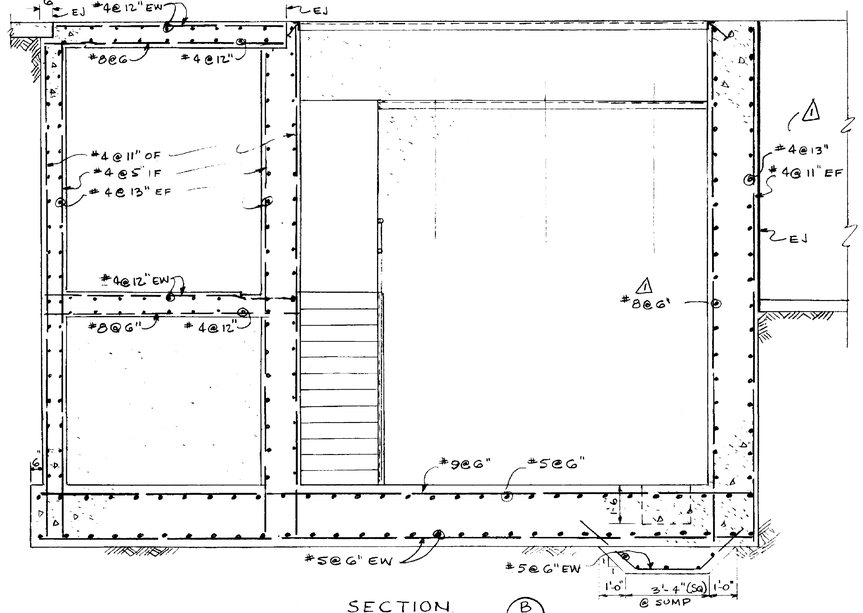

SECTION
SCALE 3/8"=1'-0"

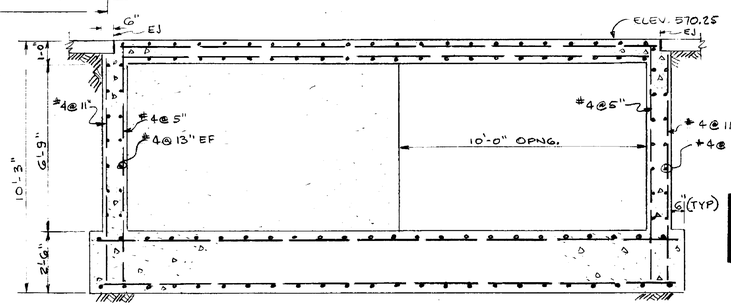

SECTION
SCALE 3/8"=1'-0"

APPROVED FOR SAFETY
Lillian N. Hayes 15 June 64
GEN. ENGR. SAFETY OFFICE
DATE

REV.	BY	DATE		C.L. NO.	APPROVED
2	JLB	9-22-64	REVISED DIM. ON SECTION "A"	60072-3	
1	GES	7-13-64	REVISED EAST WALL OF PIT & MISC CHANGES	REV. B	

NATIONAL AERONAUTICS AND SPACE ADMINISTRATION — M S F C — HUNTSVILLE, ALABAMA

FACILITIES AND DESIGN OFFICE

EXTENSION OF LOAD TEST ANNEX (BLDG 4619)

FOUNDATION FOR 2,000,000 POUND UNIVERSAL TESTING MACHINE

NASA AE CONT. NO.

FILE NO. MSFC 9130

SUBMITTED: CHIEF	APPROVAL RECOMMENDED:	APPROVED: CHIEF, DESIGN DIV.	
AE. DATE:	LAB. DATE: 6/15/64	NASA DATE: 6-16-64	
DESIGNED GES, DRAWN GES, CHECKED JLB	APPROVAL RECOMMENDED: CHIEF, STRUCT. SECTION	DRWG. NO. F&D-C-4619-S20	
SCALE: 3/8"=1'-0"	DESIGN DATE: JUNE 15, 64	SPEC. NO. F&D-433	

REF. NO. S20

MSFC-FORM 232 (REV. APRIL 1962)

4619

MSFC MASTER BID DISK 11-18-2013

NOTICE. — WHEN GOVERNMENT DRAWINGS, SPECIFICATIONS, OR OTHER DATA ARE USED FOR ANY PURPOSE OTHER THAN IN CONNECTION WITH A DEFINITELY RELATED GOVERNMENT PROCUREMENT OPERATION, THE UNITED STATES GOVERNMENT THEREBY INCURS NO RESPONSIBILITY NOR ANY OBLIGATION WHATSOEVER; AND THE FACT THAT THE GOVERNMENT MAY HAVE FORMULATED, FURNISHED, OR IN ANY WAY SUPPLIED THE SAID DRAWINGS, SPECIFICATIONS, OR OTHER DATA IS NOT TO BE REGARDED BY IMPLICATION OR OTHERWISE AS OR IN ANY MANNER LICENSING THE HOLDER OR ANY OTHER PERSON OR CORPORATION, OR CONVEYING ANY RIGHTS OR PERMISSION TO MANUFACTURE, USE, OR SELL ANY PATENTED INVENTION THAT MAY IN ANY WAY BE RELATED THERETO.

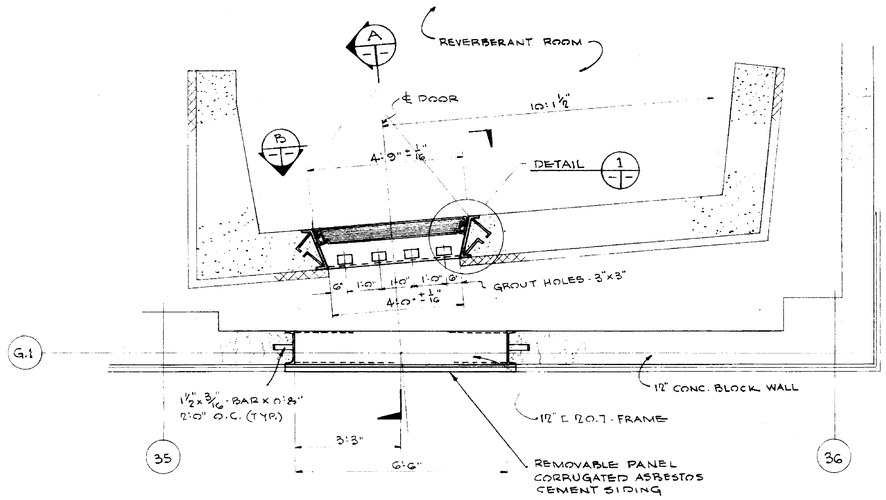

PARTIAL PLAN
SCALE: 1/2" = 1'-0"

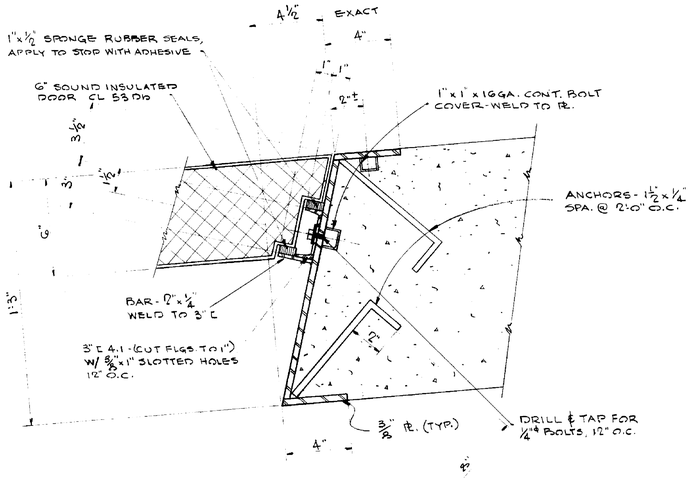

JAMB - DETAIL
SCALE: 3" = 1'-0"

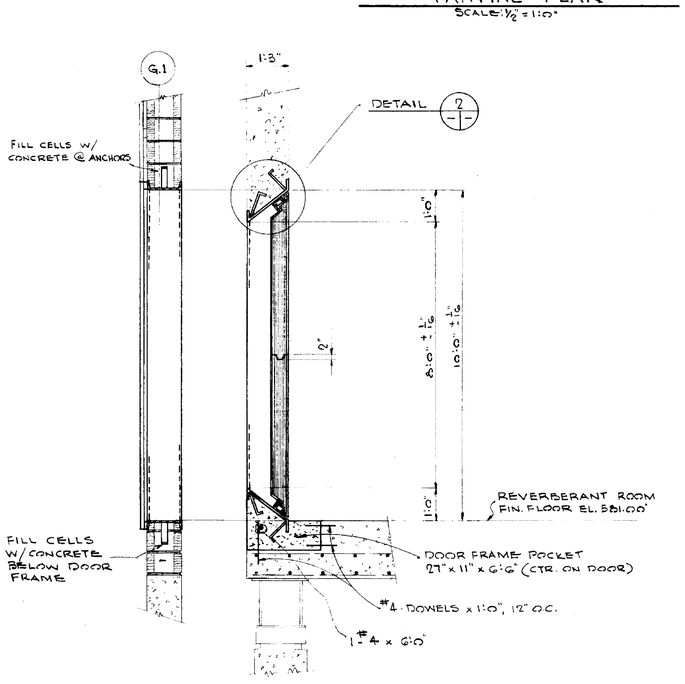

SECTION
SCALE: 1/2" = 1'-0"

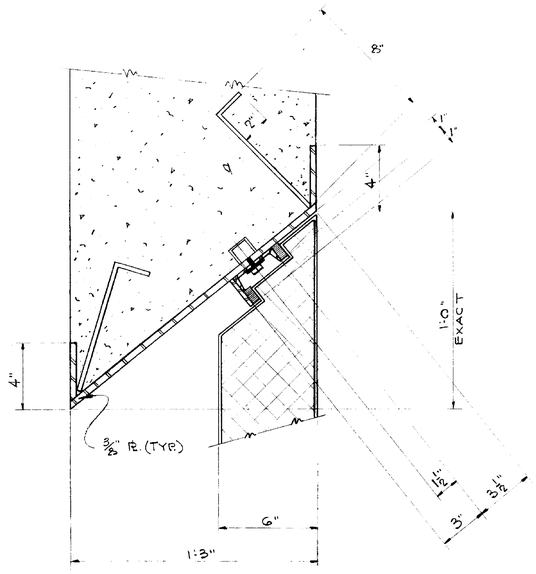

NOTE:
FOR DETAILS NOT SHOWN, SEE DETAIL 1

HEAD AND SILL - DETAIL
SCALE: 3" = 1'-0"

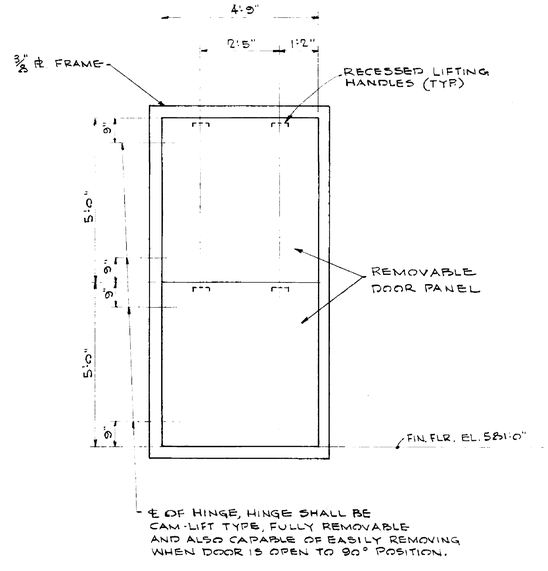

℄ OF HINGE, HINGE SHALL BE CAM-LIFT TYPE, FULLY REMOVABLE AND ALSO CAPABLE OF EASILY REMOVING WHEN DOOR IS OPEN TO 90° POSITION.

ELEVATION
SCALE: 1/2" = 1'-0"

REV.	BY	DATE		C.I. NO.	APPROVED

NATIONAL AERONAUTICS AND SPACE ADMINISTRATION — **M S F C** HUNTSVILLE, ALABAMA

EXTENSION OF LOAD TEST ANNEX (BLDG. 4619)
REVERBERANT ROOM
HORN DOOR - PLAN, SECTIONS, DETAILS

NASA AE CONT. NO. NAS 8-12014		FILE NO. MSFC 9131
SUBMITTED: CHIEF AE BRANCH	APPROVAL RECOMMENDED: R S Barrett LAB. DATE: 4-7-65	APPROVED: S D C Simmons A. SHEE - DESIGN BRANCH NASA DATE: 4-8-65
DESIGNED W.O.S. DRAWN STEADING CHECKED	APPROVAL RECOMMENDED: Walter Sirkett JTD DESIGN DATE: 6 APRIL 65	DRWG. NO. F&D-C-4619-S21
SCALE: AS SHOWN	SPEC. NO. F&D-433	C.I. NO. ?

MSFC-FORM 232 (REV. APRIL 1962)

4619

MSFC MASTER BID DISK 11-18-2013

NOTICE - WHEN GOVERNMENT DRAWINGS, SPECIFICATIONS, OR OTHER DATA ARE USED FOR ANY PURPOSE OTHER THAN IN CONNECTION WITH A DEFINITELY RELATED GOVERNMENT PROCUREMENT OPERATION, THE UNITED STATES GOVERNMENT THEREBY INCURS NO RESPONSIBILITY NOR ANY OBLIGATION WHATSOEVER; AND THE FACT THAT THE GOVERNMENT MAY HAVE FORMULATED, FURNISHED, OR IN ANY WAY SUPPLIED THE SAID DRAWINGS, SPECIFICATIONS OR OTHER DATA IS NOT TO BE REGARDED BY IMPLICATION OR OTHERWISE AS IN ANY MANNER LICENSING THE HOLDER OR ANY OTHER PERSON OR CORPORATION, OR CONVEYING ANY RIGHTS OR PERMISSION TO MANUFACTURE, USE, OR SELL ANY PATENTED INVENTION THAT MAY IN ANY WAY BE RELATED THERETO.

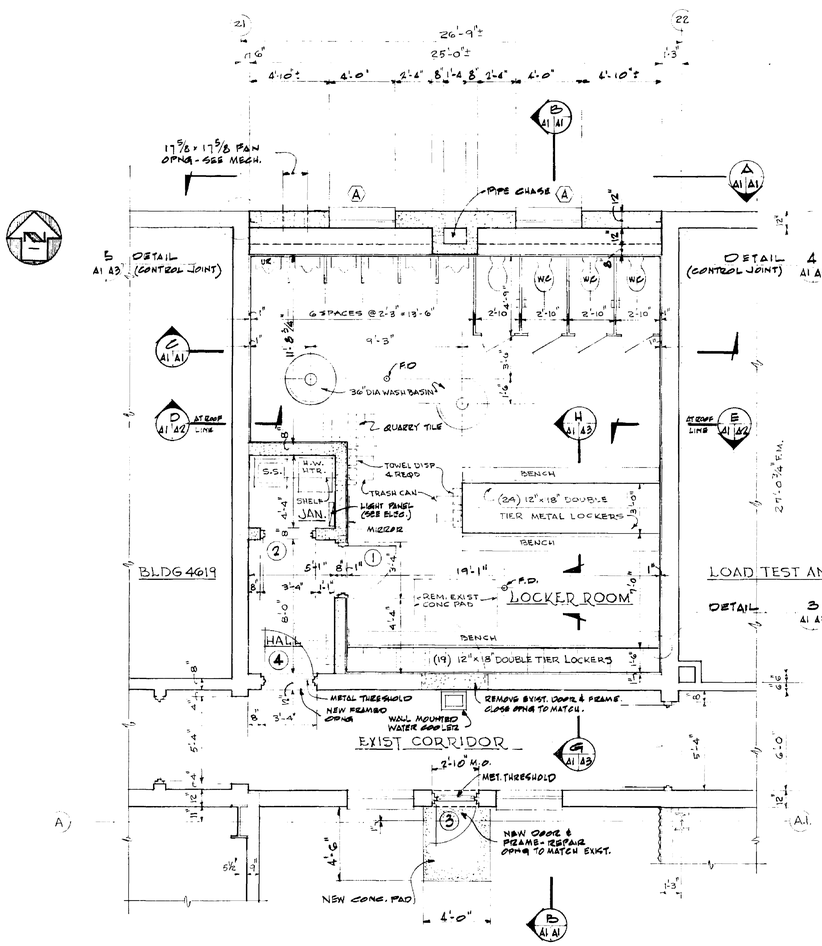

FLOOR PLAN

SCALE • 1/4" = 1'-0"

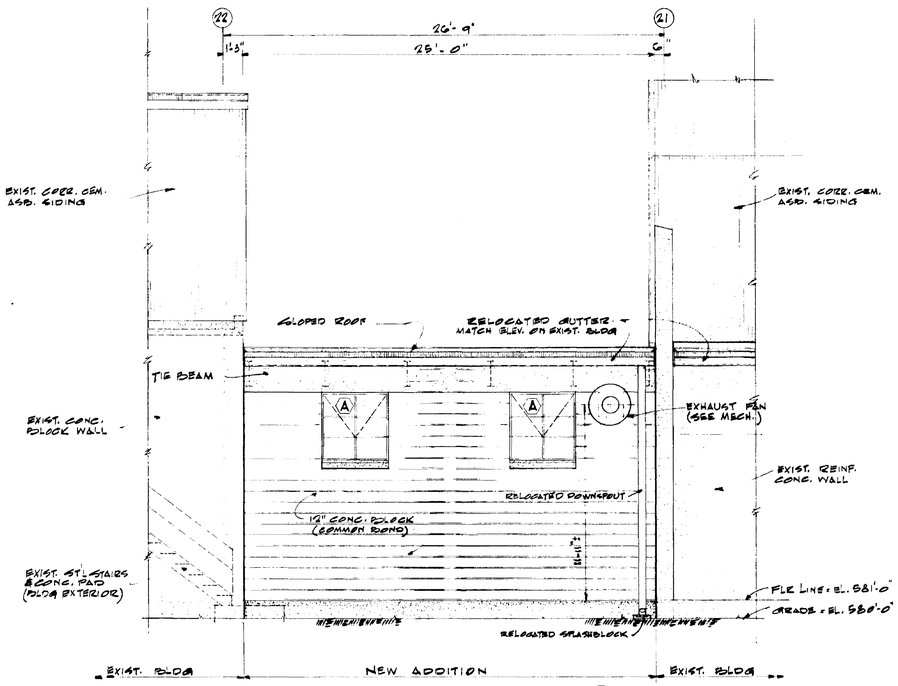

NORTH ELEVATION

SCALE • 1/8" = 1'-0"

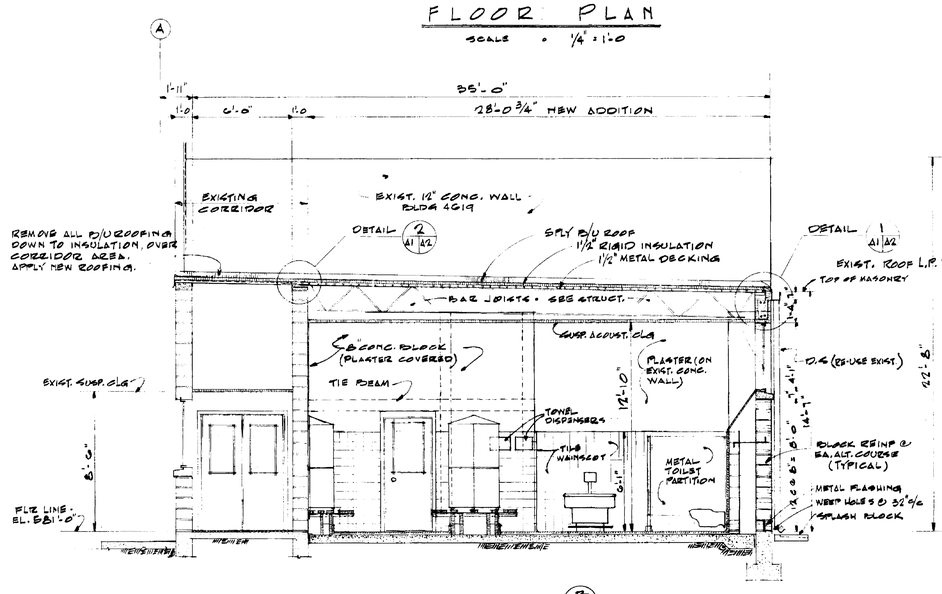

SECTION

SCALE • 1/4" = 1'-0"

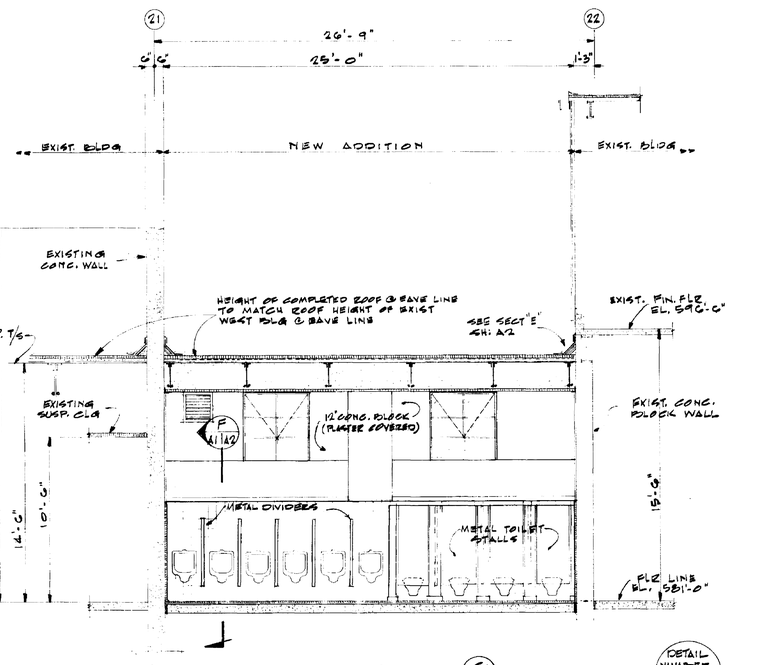

SECTION

SCALE • 1/4" = 1'-0"

DETAIL SYMBOL

LOCATION SHEET | DETAIL NUMBER | DETAIL SHEET

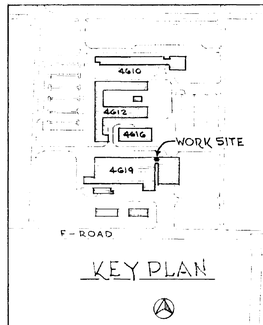

KEY PLAN

A1

REV.	BY	DATE	C.I. NO.	APPROVED

NATIONAL AERONAUTICS AND SPACE ADMINISTRATION — M S F C HUNTSVILLE, ALABAMA

FACILITIES & DESIGN OFFICE

BLDG 4619

TOILET & LOCKER ROOM FACILITIES ADDITION

ARCHITECTURAL

PLAN - SECTIONS - DETAILS

PROJECT - 65-3	SUBMITTED: [signature] CHIEF - CONTRACT DES. SECT.	FILE NO. MSFC 3118
SUBMITTED: M A Roos, REG. PROJ. ENGR. AE, DATE: 7-7-64	APPROVAL RECOMMENDED: [signature] LAB. DATE: 8-5-64	APPROVED: [signature] CHIEF - DESIGN BRANCH NASA DATE: 8-7-64
DESIGNED V D P. DRAWN VIC PASSAVANT CHECKED YARBOROUGH	APPROVAL RECOMMENDED: [signature] CHIEF - ARCH. SECTION DESIGN DATE: 8-5-64	DRWG. NO. F&D-D4619-A1
SCALE: AS NOTED	SPEC. NO. F&D-507	

MSFC MASTER BID DISK 11-18-2013

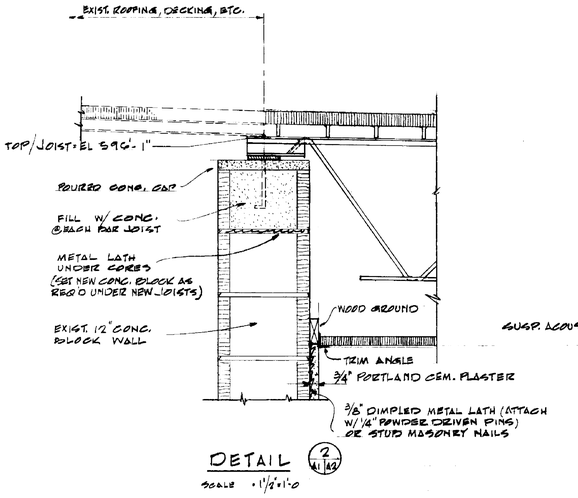

DETAIL (2 A1 A2)

SCALE • 1 1/2" = 1'-0"

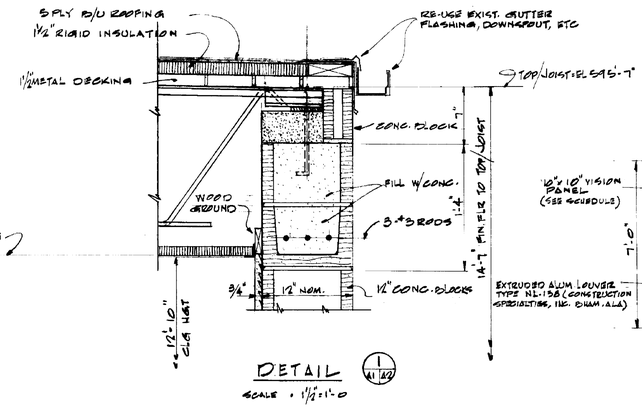

DETAIL (1 A1 A2)

SCALE • 1 1/2" = 1'-0"

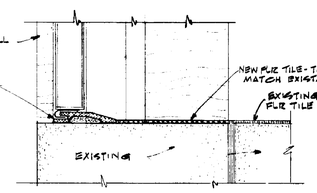

SILL (3)

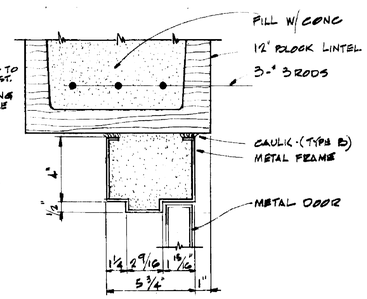

HEAD (2)

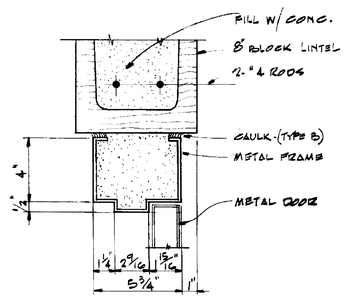

HEAD (1)

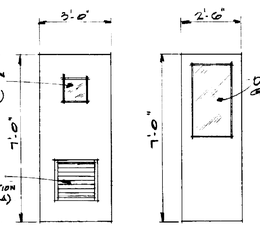

TYPE (A) TYPE (B)

DOOR TYPES

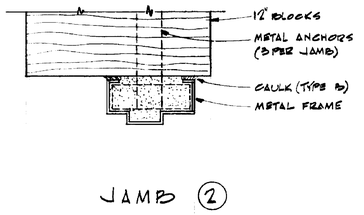

JAMB (2)

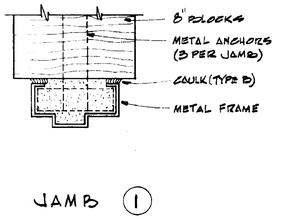

JAMB (1)

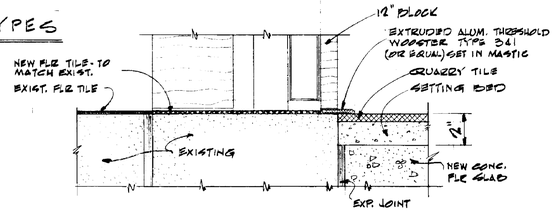

SILL (2)

DOOR DETAILS

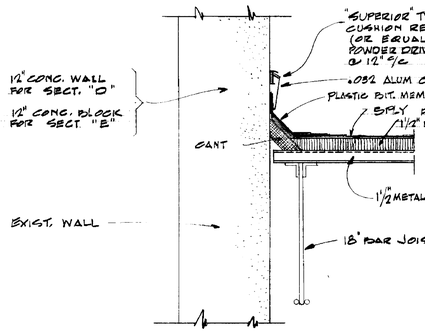

SECTION (D A1 A2) AS SHOWN & NOTED

SECTION (E A1 A2) AS SHOWN & NOTED

SCALE • 1 1/2" = 1'-0"

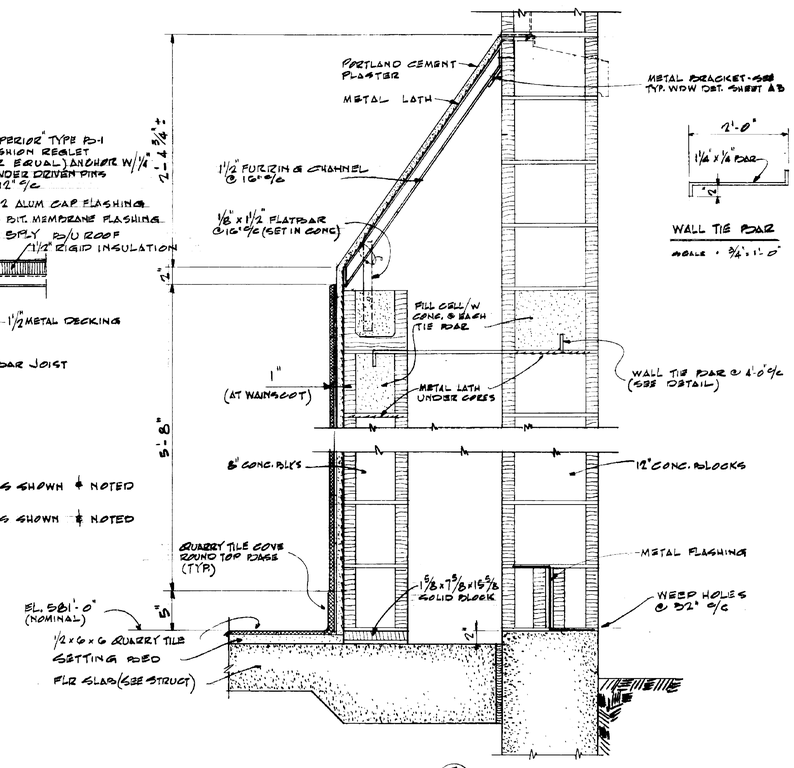

SECTION (F A1 A2)

SCALE • 1 1/2" = 1'-0"

WALL TIE ROD

SCALE • 3/4" = 1'-0"

• DOOR • SCHEDULE •

DOOR No	TYPE	MATERIAL	DOOR OPNG WIDTH	DOOR OPNG HGT	THICK.	LOUVER TYPE	LOUVER SIZE	FRAME DETAILS HEAD	FRAME DETAILS JAMB	FRAME DETAILS SILL	GLASS TYPE	HDWE SET No	• REMARKS •
1	A	METAL	3'-0"	7'-0"	1 3/4"	—	24"x26"	1	1	—	DSB		
2	A	METAL	3'-0"	7'-0"	1 3/4"	—	24"x26"	1	1	—	—		
3	PD	METAL	2'-6"	7'-0"	1 3/4"	—	—	2	2	3	DSB		
4	A	METAL	3'-0"	7'-0"	1 3/4"	—	24"x26"	2	2	2	DSB		

• ROOM • FINISH • AND • COLOR • SCHEDULE •

No	SPACE DESIGNATION	FLOOR MATERIAL	FLOOR COLOR	BASE MATERIAL	BASE COLOR	WAINSCOT MATERIAL	WAINSCOT COLOR	WALLS MATERIAL	WALLS COLOR	CEILING MATERIAL	CEILING COLOR	CEILING HGT	DOOR MATERIAL	DOOR COLOR	DOOR FRAME MATERIAL	DOOR FRAME COLOR	WDW TRIM MATERIAL	WDW TRIM COLOR	• REMARKS •
	BLDG EXTERIOR	—	—	—	—	—	—	CONC. BLK	37875	—	—	—	METAL	26440	METAL	26440	METAL	26440	NOTE: ALL PAINT COLOR NUMBERS REFER TO U.S. STANDARD 595 & MFSC PAINT COLOR STANDARDS.
	TOILET & LOCKER RM	QUARRY TILE	TAN	QUARRY TILE	TAN	GLAZED CER. TILE	BUFF	PLASTER	31643	ACOUS. TILE	WHITE	12'-0"	METAL	21643	METAL	21643	METAL	21643	METAL LOCKERS TO BE 21643 COLOR - TO MATCH WALLS
	HALL	QUARRY TILE	TAN	QUARRY TILE	TAN	—	—	CONC. BLK	31643	ACOUS. TILE	WHITE	9'-0"	METAL	21643	METAL	21643	—	—	
	JANITOR'S CLOSET	QUARRY TILE	TAN	QUARRY TILE	TAN	—	—	CONC. BLK	31643	ACOUS. TILE	WHITE	9'-0"	METAL	21643	METAL	21643	—	—	

APPROVED FOR SAFETY — AUG 1 1964 — LOSE

A2

REV.	BY	DATE		C.I. NO.	APPROVED

NATIONAL AERONAUTICS AND SPACE ADMINSTRATION — M S F C — HUNTSVILLE, ALABAMA

FACILITIES & DESIGN OFFICE

BLDG 4619

TOILET & LOCKER ROOM FACILITIES ADDITION
ARCHITECTURAL
SECTIONS - DETAILS - DOOR & FINISH SCHEDULES

PROJECT 65-3

SUBMITTED: CHIEF, CONTRACT DESIGN SECTION

FILE NO. MSFC 3119

SUBMITTED: M. A. Roose, RESIDENT PROJECT ENGINEER — A1: DATE: 7-7-64

APPROVAL RECOMMENDED: CHIEF, A&CH SECTION — LA: DATE: 8-3-64

APPROVED: CHIEF, DESIGN BRANCH — NASA: DATE: 8-7-64

DESIGNED V. P. P. DRAWN VIC PASSAVANT CHECKED YARBOROUGH

APPROVAL RECOMMENDED: CHIEF, A&CH SECTION — DESIGN DATE: 8-5-64 — SPEC. NO. F&D-507

DRWG. NO. F•D-D 4619-A2

SCALE: AS NOTED

4619

MSFC MASTER BID DISK 11-18-2013

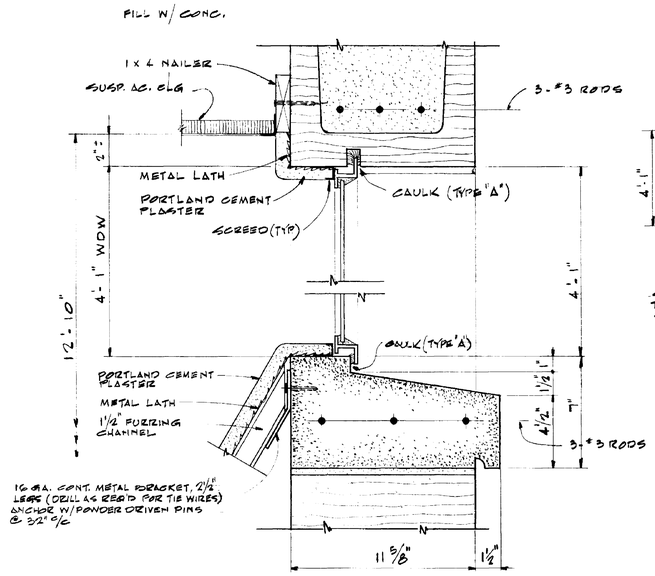

TYPICAL WINDOW DETAIL

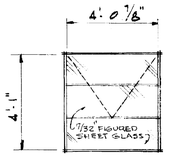

WINDOW (A)

STANDARD INTERMEDIATE STEEL SWI # 423 PROJECT-IN TYPE WITH TWO EING TYPE SPRING CATCHES ON VENT.

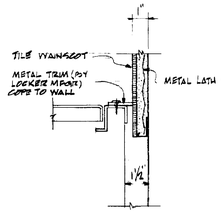

DETAIL (3 / A1 / A3)

SCALE - 3"=1'-0"

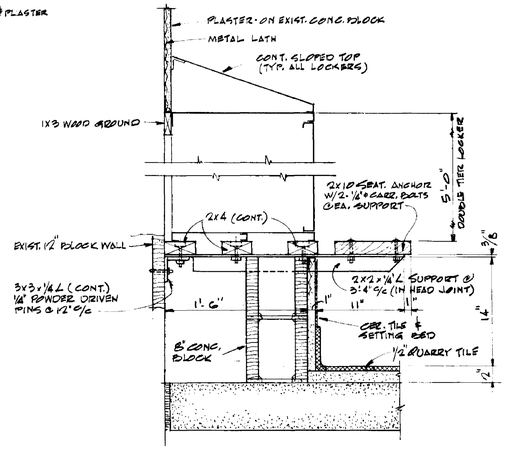

SECTION (G / A1 / A3)

SCALE - 1½"=1'-0"

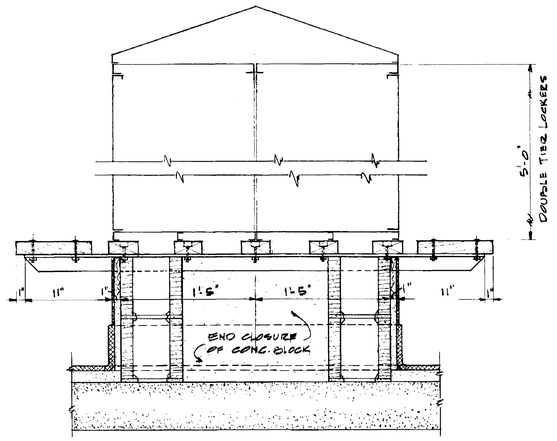

SECTION (H / A1 / A3)

SCALE - 1½"=1'-0"

NOTE - MATERIALS, MEMBERS & SIZES, ETC, NOT SHOWN, SEE SECT. "G"

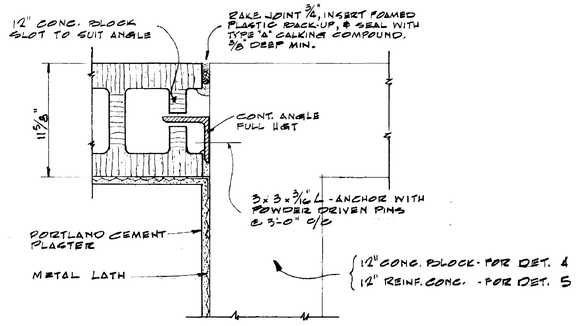

DETAIL (4 / A1 / A3) AS SHOWN & NOTED

DETAIL (5 / A1 / A3) AS SHOWN & NOTED

(NO SCALE)

REV.	BY	DATE		C.I. NO.	APPROVED

NATIONAL AERONAUTICS AND SPACE ADMINSTRATION — M S F C, HUNTSVILLE, ALABAMA

FACILITIES & DESIGN OFFICE

BLDG 4619

TOILET & LOCKER ROOM FACILITIES ADDITION
ARCHITECTURAL
SECTIONS - DETAILS

PROJECT G5-3	SUBMITTED: CHIEF, CONTRACT DESIGN SECTION	FILE NO. MSFC 3120
SUBMITTED: M.A. Roose RESIDENT PROJECT ENGINEER	APPROVAL RECOMMENDED:	APPROVED: R.D. Ramsey Jr. CHIEF, DESIGN BRANCH
AE: DATE: 7-7-64	LAB: DATE: 8-3-64	MASA DATE: 8-7-64
DESIGNED V. R. P. DRAWN VIC MASSAVANT CHECKED YARBOROUGH	APPROVAL RECOMMENDED: CHIEF, A&E SECTION; DESIGN DATE: 8-5-64	DRWG. NO. F&D-D 4619-A3
SCALE: AS NOTED	SPEC. NO. F&D-507	

APPROVED FOR SAFETY AUG 1 1964 DATE — M. SERRINE

A3

4619

MSFC MASTER BID DISK 11-18-2013

DRAWING INDEX

BUILDING NO. 4619

FILE NO.	DRAWING NO.	SHEET NO.	TITLE – TOILET & LOCKER ROOM FACILITIES ADDITION
3117	F&D-D-4619-C1	C1	CIVIL - LOCATION MAP & DRAWING INDEX
3118	F&D-D-4619-A1	A1	ARCHITECTURAL - PLAN - SECTIONS - DETAILS
3119	F&D-D-4619-A2	A2	ARCHITECTURAL - SECTIONS - DETAILS - DOOR & FINISH SCHEDULES
3120	F&D-D-4619-A3	A3	ARCHITECTURAL - SECTIONS - DETAILS
3121	F&D-D-4619-S1	S1	STRUCTURAL - PLANS, SECTIONS & DETAILS
3122	F&D-D-4619-M1	M1	MECHANICAL - PLUMBING, HEATING, VENTILATION
3123	F&D-D-4619-E1	E1	ELECTRICAL - PLANS

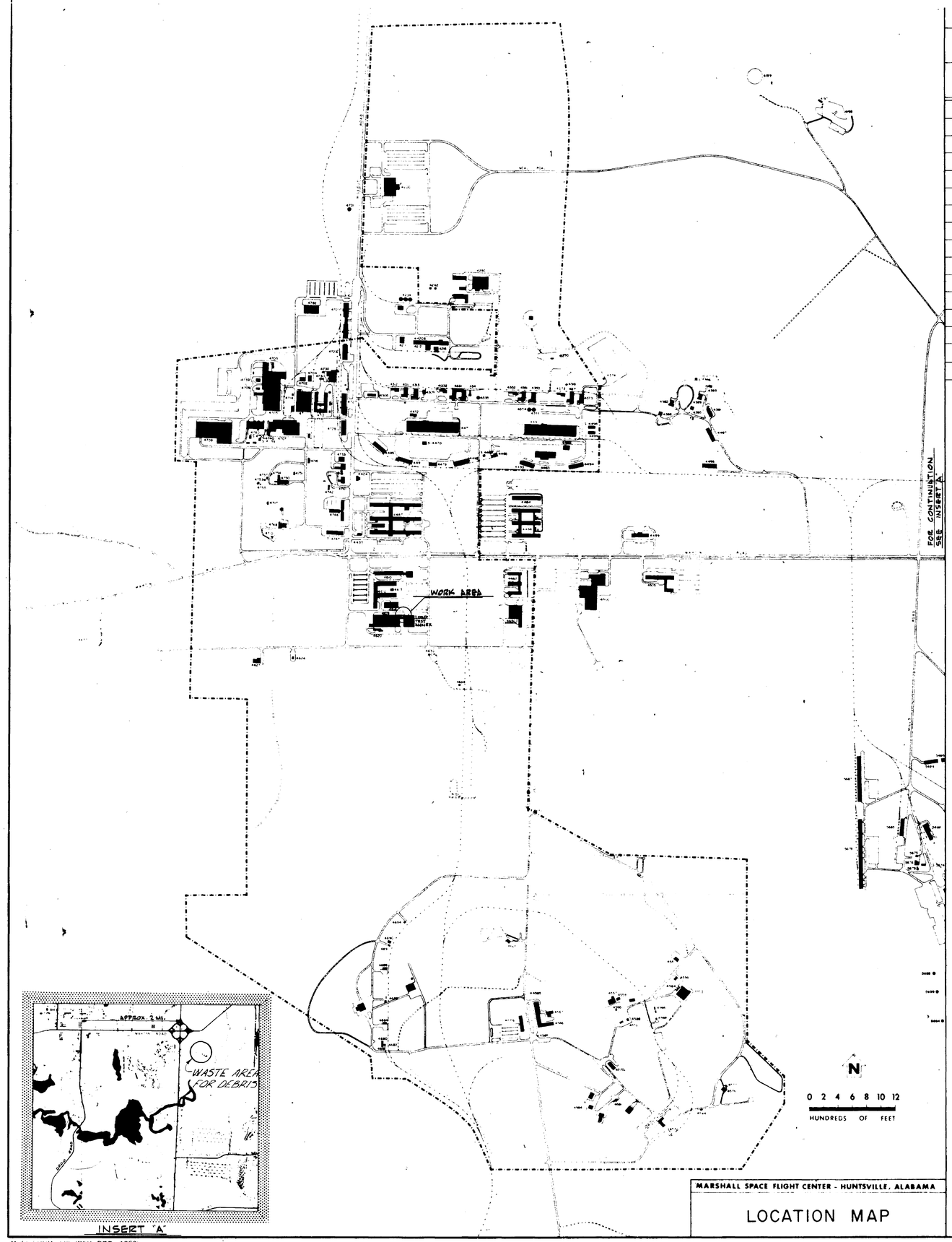

MARSHALL SPACE FLIGHT CENTER - HUNTSVILLE, ALABAMA

LOCATION MAP

C1

NATIONAL AERONAUTICS AND SPACE ADMINISTRATION — M S F C, HUNTSVILLE, ALABAMA

FACILITIES AND DESIGN OFFICE

BLDG. 4619
TOILET & LOCKER ROOM FACILITIES ADDITION
CIVIL
LOCATION MAP & DRAWING INDEX

PROJ. NO. G5-3 | FILE NO. 3117 MSFC

SUBMITTED M. A. Rose, PROJ. ENGR. AE DATE 8-4-64

APPROVAL RECOMMENDED: C. C. Greenwood, Jr. LAB DATE 8/10/64

APPROVED: R. D. Ramey, Jr., CHIEF, DESIGN BRANCH, NASA DATE 8-7-64

DESIGNED
DRAWN J.W. BAUGH
CHECKED
SCALE AS NOTED

APPROVAL RECOMMENDED: CHIEF, CIVIL SECTION
DESIGN DATE AUG. 12, 1964
SPEC. NO. F&D-507

DRWG. NO. F&D-D-4619-C1

MSFC FORM 213 (REV. DEC., 1960)

4615

MSFC MASTER BID DISK 11-18-2013

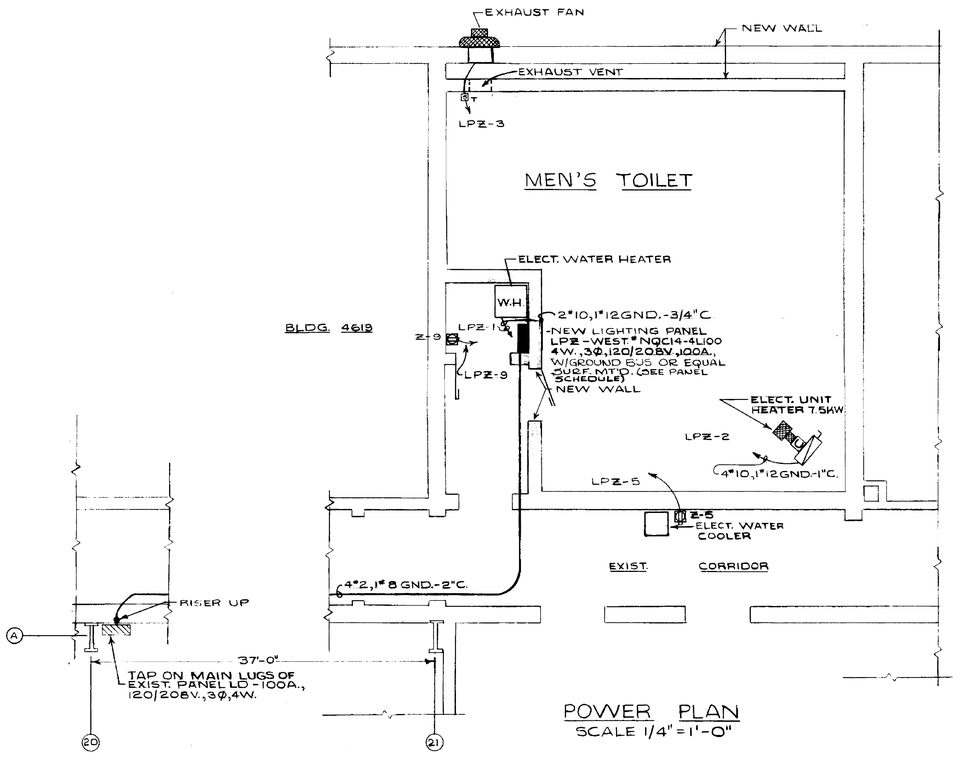

POWER PLAN
SCALE 1/4" = 1'-0"

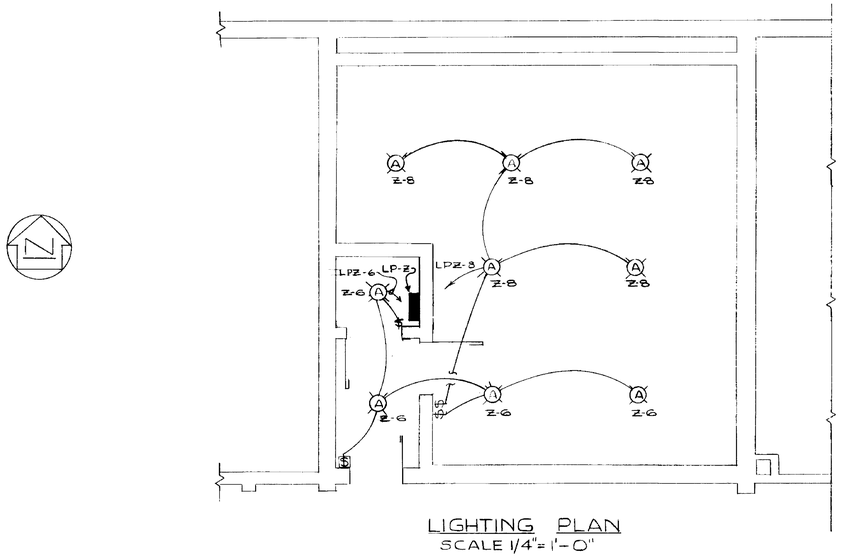

LIGHTING PLAN
SCALE 1/4" = 1'-0"

PANEL SCHEDULE

LIGHTING PANEL "LP-Z"
120/208V.,3Ø,4W.,100A.

CIR. NO.	BRKR. AMPS	NO. POLES	WIRE SIZE	LOCATION	WATTS ØA	ØB	ØC
1	30	2	10	HOT WATER HEATER	2000	2000	
2	30	3	10	ELECT. UNIT HEATER	2500	2500	2500
3	20	1	12	VENT FAN			200
4	20	1		SPARE			
5	20	1	12	WATER COOLER RECEPT.	300		
6	20	1	12	LIGHTING		800	
7	20	1		SPARE			
8	20	1	12	LIGHTING			1000
9	20	1	12	BROOM CLOSET RECEPT.			300
10	20	1		SPARE			
11	20	1		"			
				SUB TOTAL	4800	5300	4000
				TOTAL		14100	

ELECTRICAL LEGEND

- RECEPTACLE-WALL MOUNTED DUPLEX, 15A., 125V., 3W. GROUNDED TYPE. HUBBELL #5262 OR EQUAL. M.H. 18" SURF. MT'D. IN FS BOX
- ELECTRIC UNIT HEATER - 7.5 KW, 120/208V., 4W., 3Ø
- C — ELECTRIC UNIT HEATER CONTACTOR - FURNISHED WITH MECH. EQUIP. & INSTALLED WITH ELECT. WORK.
- EXHAUST FAN - 1/12 HP, 120V., 1Ø
- WH — ELECT. WATER HEATER - 4000 W., 208V., 1Ø
- SINGLE POLE SWITCH - 20A., 125/277V. HUBBELL #1221 OR EQUAL. M.H. 4'-6" SURF. MT'D. IN FS BOX
- T — MOTOR SWITCH W/THERMAL OVERLOAD PROTECTION - TO BE FURNISHED W/MECH. EQUIP. & INSTALLED UNDER ELECT. WORK. SURFACE MT'D. IN FS BOX
- NEW LIGHTING PANEL - LP-Z (AS NOTED ON DWG'S.)
- EXIST. LIGHTING PANEL - LD (AS NOTED ON DWG'S.)
- INCANDESCENT LIGHTING FIXTURE - HOLOPHANE #C868, SURF. MT'D., 2-100W-A19 LAMPS OR EQUAL.
- NON-FUSIBLE SAFETY SWITCH - 3R, 30A., 250V., WEST. #CAU-321 OR EQUAL.
- RIGID CONDUIT, CONCEALED O.H. & IN WALL, 3/4" UNLESS NOTED.
- HOMERUN TO PANEL (20A., 1P., 8KR. UNLESS OTHERWISE NOTED) NOTE: ← IS 2"12, 1"12 GND.-3/4"C., ←## IS 3"12, 1"12 GND.-3/4"C. ETC.

ELECTRICAL NOTES

1. ALL ELECT. WORK SHALL CONFORM TO THE N.E.C. AS A MINIMUM STANDARD.
2. ALL EXPOSED NON-CURRENT CARRYING PARTS OF ELECT. EQUIP. SHALL BE GN'D BY MEANS OF AN ADDITIONAL WIRE W/GREEN COVERING RUN W/CIRCUIT CONDUCTORS.
3. MINIMUM WIRE SIZE SHALL BE #12 AWG & MINIMUM CONDUIT SIZE 3/4".
4. SEE MECH. DWG'S FOR EXACT LOCATION OF MECH. EQUIP.

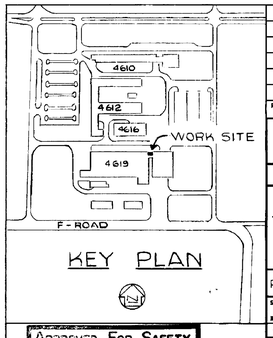

KEY PLAN

APPROVED FOR SAFETY
GEN. ENGR. SAFETY OFFICE
AUG 4 1964
DATE

E-1

REV.	BY	DATE		C.I. NO.	APPROVED

NATIONAL AERONAUTICS AND SPACE ADMINSTRATION — **M S F C** HUNTSVILLE, ALABAMA

FACILITIES & DESIGN OFFICE

BLDG. 4619

TOILET & LOCKER ROOM FACILITIES ADDITION
ELECTRICAL
PLANS

PROJ. NO. 65-3

SUBMITTED: M. A. Roose
RESIDENT PROJECT ENGINEER
AE: DATE: 8-3-64

DESIGNED W.H.F.
DRAWN J.E.S.
CHECKED R.L.S. / JPS
SCALE: NOTED

SUBMITTED: R. D. Ramsey Jr.
CHIEF, CONTRACT MGMT. SECTION

APPROVAL RECOMMENDED: J. P. Williams
LAB: DATE: 8-4-64

APPROVAL RECOMMENDED: R. D. Ramsey Jr.
CHIEF, ELECT. SECTION
DESIGN DATE: 8-3-64
SPEC. NO. FDD-501

APPROVED: R. D. Ramsey Jr.
CHIEF, DESIGN BRANCH
NASA DATE: 8-7-64

FILE NO. 3123 MSFC

DRWG. NO. FDD-D-4619-E-1

4619

MSFC MASTER BID DISK 11-18-2013

NOTICE — WHEN GOVERNMENT DRAWINGS, SPECIFICATIONS, OR OTHER DATA ARE USED FOR ANY PURPOSE OTHER THAN IN CONNECTION WITH A DEFINITELY RELATED GOVERNMENT PROCUREMENT OPERATION, THE UNITED STATES GOVERNMENT THEREBY INCURS NO RESPONSIBILITY NOR ANY OBLIGATION WHATSOEVER; AND THE FACT THAT THE GOVERNMENT MAY HAVE FORMULATED, FURNISHED, OR IN ANY WAY SUPPLIED THE SAID DRAWINGS, SPECIFICATIONS OR OTHER DATA IS NOT TO BE REGARDED BY IMPLICATION OR OTHERWISE AS IN ANY MANNER LICENSING THE HOLDER OR ANY OTHER PERSON OR CORPORATION, OR CONVEYING ANY RIGHTS OR PERMISSION TO MANUFACTURE, USE, OR SELL ANY PATENTED INVENTION THAT MAY IN ANY WAY BE RELATED THERETO.

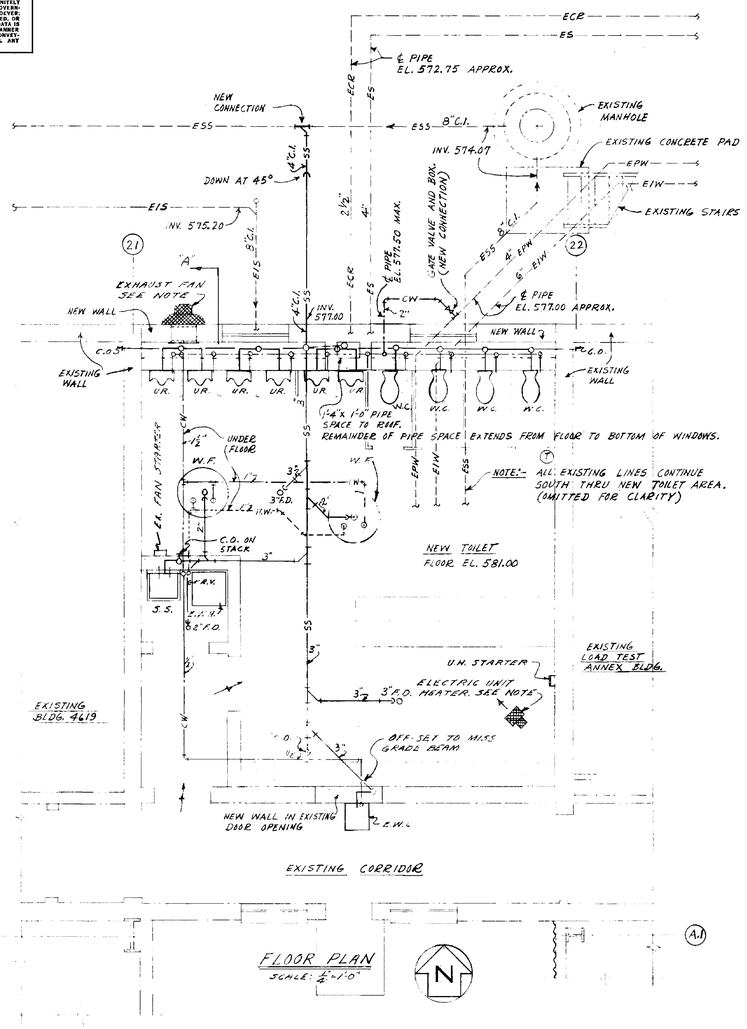

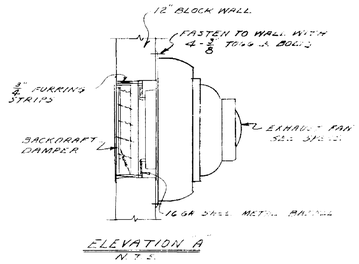

ELEVATION A
N.T.S.

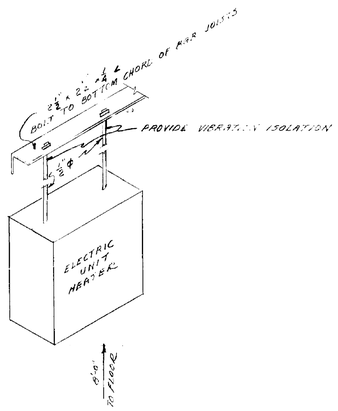

UNIT HEATER SUPPORT
NOT TO SCALE

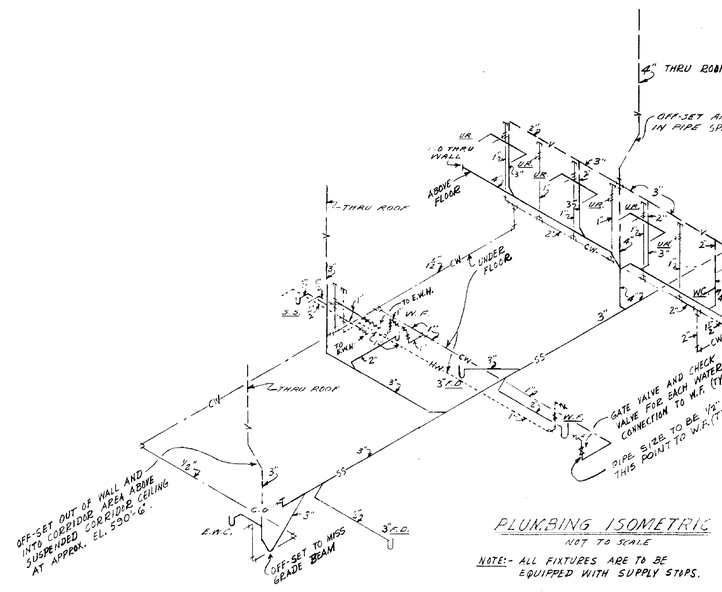

PLUMBING ISOMETRIC
NOT TO SCALE

NOTE:- ALL FIXTURES ARE TO BE EQUIPPED WITH SUPPLY STOPS.

LEGEND

W.C.	WATER CLOSET
U.R.	URINAL
W.F.	WASH FOUNTAIN
F.D.	FLOOR DRAIN
C.O.	CLEAN OUT
S.S.	SERVICE SINK
E.W.H.	ELECTRIC WATER HEATER
E.W.C.	ELECTRIC WATER COOLER

SS	NEW SANITARY SEWER LINES
V	NEW VENT LINES
CW	NEW COLD WATER LINES (POTABLE)
HW	NEW HOT WATER LINES (POTABLE)
ESS	EXISTING SANITARY SEWER LINES
EIS	EXISTING INDUSTRIAL SEWER LINES
EPW	EXISTING POTABLE WATER LINES
EIW	EXISTING INDUSTRIAL WATER LINES
ES	EXISTING STEAM LINES
ECR	EXISTING STEAM CONDENSATE RETURN LINES
	GATE VALVE
	CHECK VALVE

PLUMBING NOTES

(1) FOR CONNECTION TO WATER MAIN, CONTRACTOR SHALL FURNISH TAP AND SLEEVE, GATE VALVE AND VALVE BOX. TAP WILL BE PERFORMED BY THE GOVERNMENT.

(2) ELECTRIC WATER COOLER SHALL HAVE CAPACITY TO COOL NOT LESS THAN 17 GPH TO 50° WHEN ENTERING WATER AT 70°F AND AMBIENT TEMPERATURE OF 90°F. 120V, 1Ø, 60 CY.

(3) ELECTRICAL WATER HEATER SHALL HAVE TANK CAPACITY OF 40 GALLONS AND BE DOUBLE HEATING ELEMENTS FOR 208 V, 1Ø, 60 CY ELECTRICAL SERVICE. LOWER ELEMENT SHALL BE 2,000 WATTS AND UPPER 2,000 WATTS. HEATER SHALL BE TABLE-TOP STYLE AND SHALL BE EQUIPPED WITH ¾" COMBINATION TEMP. & PRESS. RELIEF VALVE.

HEATING NOTES: ELECTRIC UNIT HEATER SHALL HAVE CAPACITY OF NOT LESS THAN 7.5 KW AND 425 CFM. UNIT SHALL BE SUSPENDED FROM ROOF CONSTRUCTION WITH ¾" Ø RODS. BOTTOM OF UNIT 8'-0" ABOVE FINISH FLOOR. 208 V, 3Ø, 60 CY ELECTRIC SERVICE. CHROMALOX LUH 75 OR APPROVED EQUAL. PROVIDE NECESSARY CONTACTORS AND THERMOSTAT. ALLEN-BRADLEY BULL 600, OR EQUAL, STARTER W/ LIGHT. (S.P.)

VENTILATING NOTES: WALL EXHAUST FAN SHALL HAVE CAPACITY OF NOT LESS THAN 975 CFM @ ⅝" S.P. 120 V, 1Ø, 60 CY ELECTRIC SERVICE. JAMES HUNTER MODEL NO 128 CW, OR APPROVED EQUAL. PROVIDE ALLEN-BRADLEY BULL 600, OR EQUAL, STARTER W/ LIGHT. (S.P.)

REV.	BY	DATE	C.I. NO.	APPROVED

NATIONAL AERONAUTICS AND SPACE ADMINISTRATION — M S F C HUNTSVILLE, ALABAMA

FACILITIES & DESIGN OFFICE

BUILDING 4619
TOILET & LOCKER ROOM FACILITIES ADDITION
MECHANICAL
PLUMBING, HEATING, VENTILATION

PROJ. NO. 65-3	SUBMITTED: CHIEF CONTRACT DESIGN SEC.	FILE NO. MSFC 3122
SUBMITTED: M. L. Roos, RESIDENT PROJECT ENGINEER	APPROVAL RECOMMENDED: CHIEF, ENGINEERING BRANCH	APPROVED: S. D. Conway, Jr. CHIEF, DESIGN BRANCH
AE. DATE: 7-6-64	LAB. DATE: 8-3-64	NASA DATE: 8-7-64
DESIGNED KETTERSON DRAWN KETTERSON CHECKED C.B.S.	APPROVAL RECOMMENDED: CHIEF, MECH. DESIGN SEC. DESIGN DATE: 8-3-64	DRWG. NO. F&D-D-4619-M1
SCALE: AS NOTED	SPEC. NO. F&D-507	

AUG 1964

MI

MSFC-FORM 232 (REV. APRIL 1962)

4619

MSFC MASTER BID DISK 11-18-2013

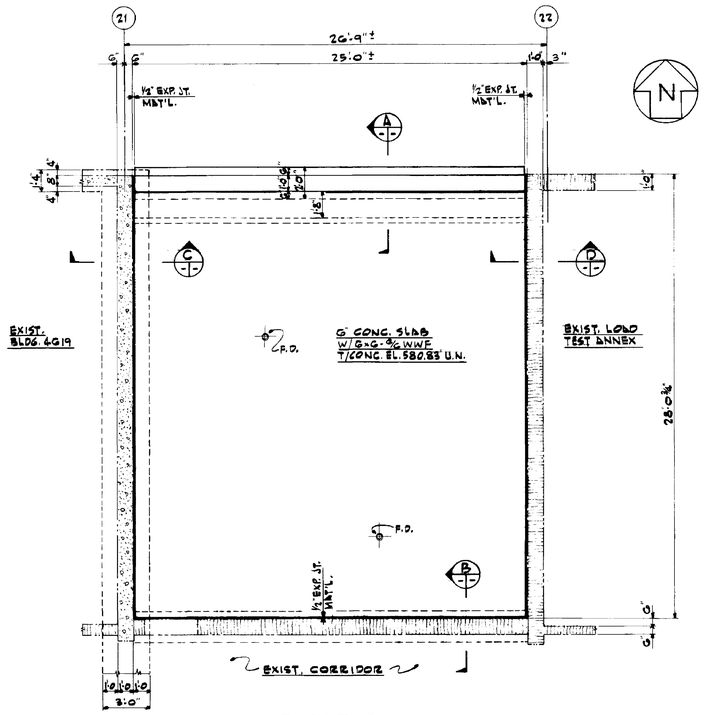

FLOOR PLAN
SCALE: 1/4"=1'-0"

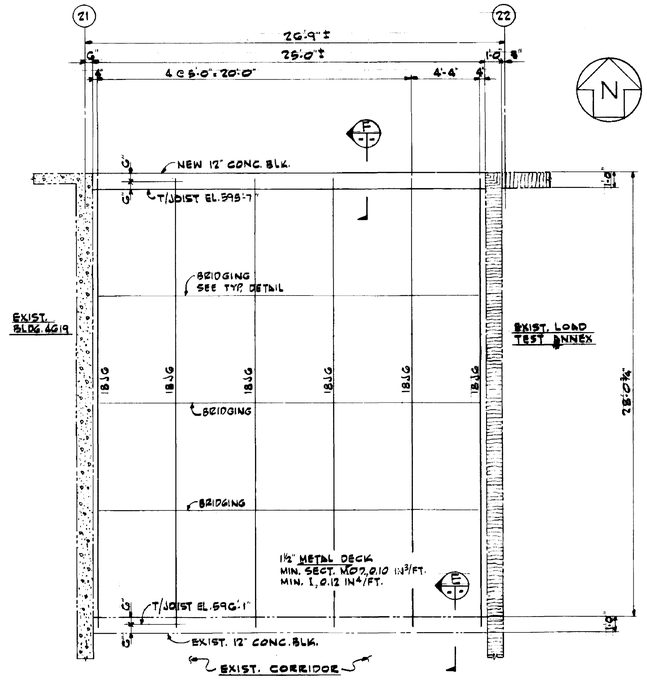

ROOF PLAN
SCALE: 1/4"=1'-0"

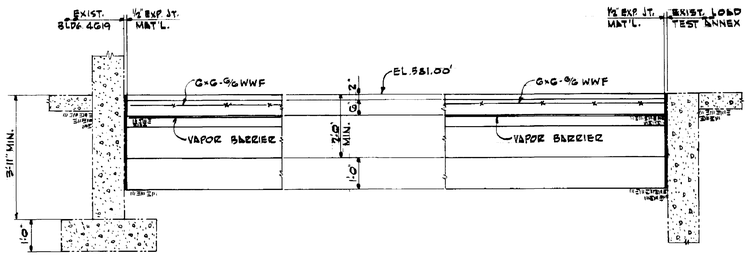

SECTION C
SCALE: 1/2"=1'-0"

SECTION D
SCALE: 1/2"=1'-0"

GENERAL NOTES

A. APPLICABLE CODES, STANDARDS AND SPECIFICATIONS
- (1) AMERICAN CONCRETE INSTITUTE
  - (a) MANUAL OF STANDARD PRACTICE FOR DETAILING CONCRETE STRUCTURES (ACI-315).
  - (b) BUILDING CODE REQUIREMENTS FOR REINFORCED CONCRETE (ACI-318)
- (2) AMERICAN WELDING SOCIETY STANDARDS D1.0.
- (3) STEEL JOIST STANDARD SPECIFICATIONS, STEEL JOIST INSTITUTE, 1964 EDITION.

B. DESIGN LOADS
- (1) DEAD LOADS
- (2) ROOF LIVE LOAD, 20 PSF

C. DESIGN STRESSES
- (1) CONCRETE - f'_c = 3000 PSI AT 28 DAYS
- (2) REINFORCING STEEL
  - (a) BARS - ASTM-A15, INTERMEDIATE GRADE
  - (b) MESH - ASTM-A185
  - (c) DEFORMATIONS - ASTM-A305
- (3) SOIL - 4000 PSF

D. GENERAL
- (1) THE CONTRACTOR SHALL VERIFY ALL EXISTING CONDITIONS AND DIMENSIONS PRIOR TO FABRICATION OF STEEL.
- (2) LAP REINFORCING (24.) DIAMETERS (1'-6" MIN.) AT SPLICE POINTS.

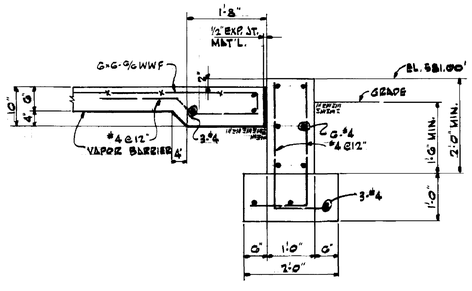

SECTION A
SCALE: 3/4"=1'-0"

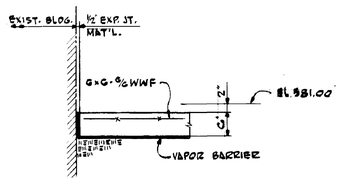

SECTION B
SCALE: 3/4"=1'-0"

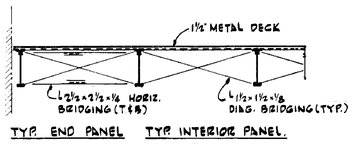

TYP. END PANEL TYP. INTERIOR PANEL.

TYP. BRIDGING DETAIL
SCALE: 3/8"=1'-0"

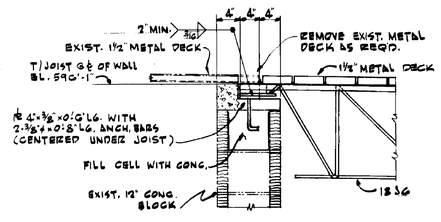

SECTION E
SCALE: 1"=1'-0"

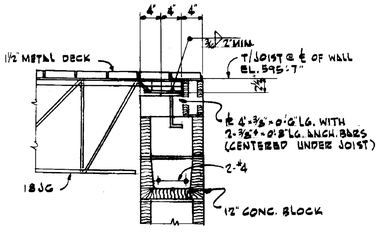

SECTION F
SCALE: 1"=1'-0"

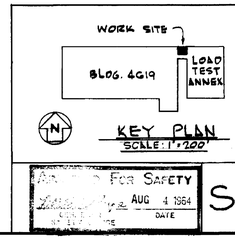

For Safety
AUG 4 1964
DATE
S1

REV.	BY	DATE		C.I. NO.	APPROVED

NATIONAL AERONAUTICS AND SPACE ADMINSTRATION
M S F C
HUNTSVILLE, ALABAMA

FACILITIES & DESIGN OFFICE

BLDG. 4619
TOILET & LOCKER ROOM FACILITIES ADDITION
STRUCTURAL
PLANS, SECTIONS & DETAILS

PROJ. NO. GS-3	SUBMITTED: CHIEF, CONTRACT DESIGN SECTION	FILE NO. 3121 MSFC
SUBMITTED: M. D. Rossi RESIDENT PROJECT ENGINEER	APPROVAL RECOMMENDED:	APPROVED: R. O. Ramsey Jr. CHIEF, DESIGN BRANCH
AE DATE 7-14-64	LAB DATE: 8-3-64	NASA DATE: 8-7-64
DESIGNED AEG DRAWN J.W. BRUSH CHECKED B.S.S.	APPROVAL RECOMMENDED: CHIEF, STRUCT. SECTION DESIGN DATE: 8-5-64	DRWG. NO. F&D-D-4619-S1
SCALE: AS NOTED	SPEC. NO. F&D-C-7	

4619

MSFC MASTER BID DISK 11-18-2013

NOTICE — WHEN GOVERNMENT DRAWINGS, SPECIFICATIONS, OR OTHER DATA ARE USED FOR ANY PURPOSE OTHER THAN IN CONNECTION WITH A DEFINITELY RELATED GOVERNMENT PROCUREMENT OPERATION, THE UNITED STATES GOVERNMENT THEREBY INCURS NO RESPONSIBILITY NOR ANY OBLIGATION WHATSOEVER; AND THE FACT THAT THE GOVERNMENT MAY HAVE FORMULATED, FURNISHED, OR IN ANY WAY SUPPLIED THE SAID DRAWINGS, SPECIFICATIONS OR OTHER DATA IS NOT TO BE REGARDED BY IMPLICATION OR OTHERWISE AS IN ANY MANNER LICENSING THE HOLDER OR ANY OTHER PERSON OR CORPORATION, OR CONVEYING ANY RIGHTS OR PERMISSION TO MANUFACTURE, USE, OR SELL ANY PATENTED INVENTION THAT MAY IN ANY WAY BE RELATED THERETO.

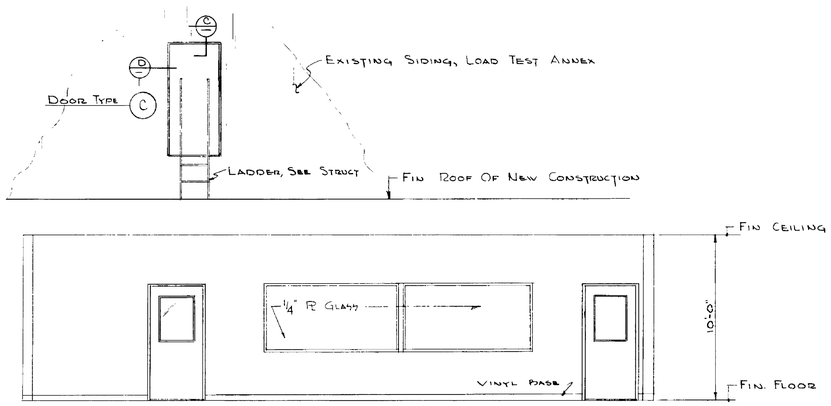

ELEVATION "A"
SCALE 1/4" = 1'-0"

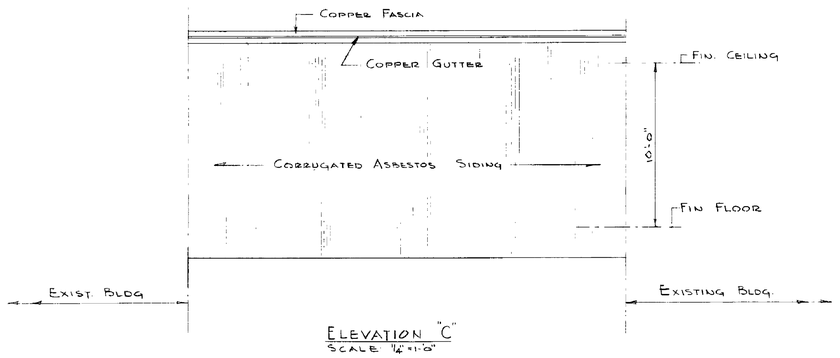

ELEVATION "C"
SCALE 1/4" = 1'-0"

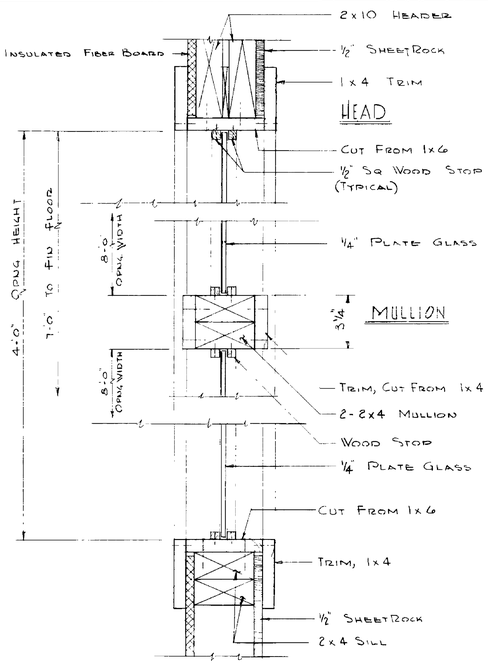

SILL, JAMB SIMILAR

VIEW WINDOW DETAIL
SCALE 3" = 1'-0"

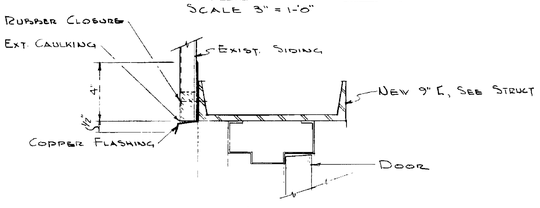

SECTION C
SCALE 3" = 1'-0"

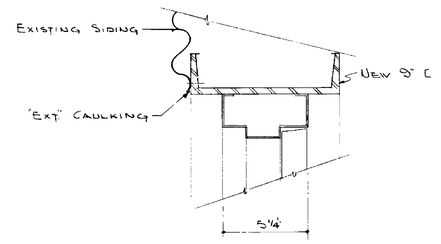

SECTION D
SCALE 3" = 1'-0"

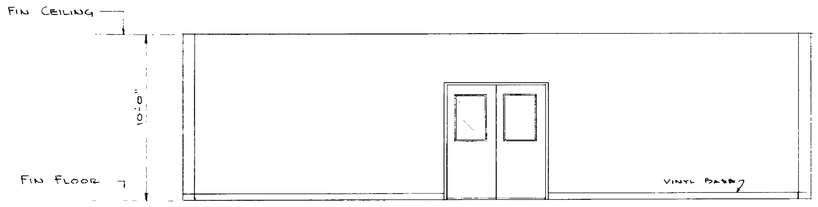

ELEVATION "B"
SCALE 1/4" = 1'-0"

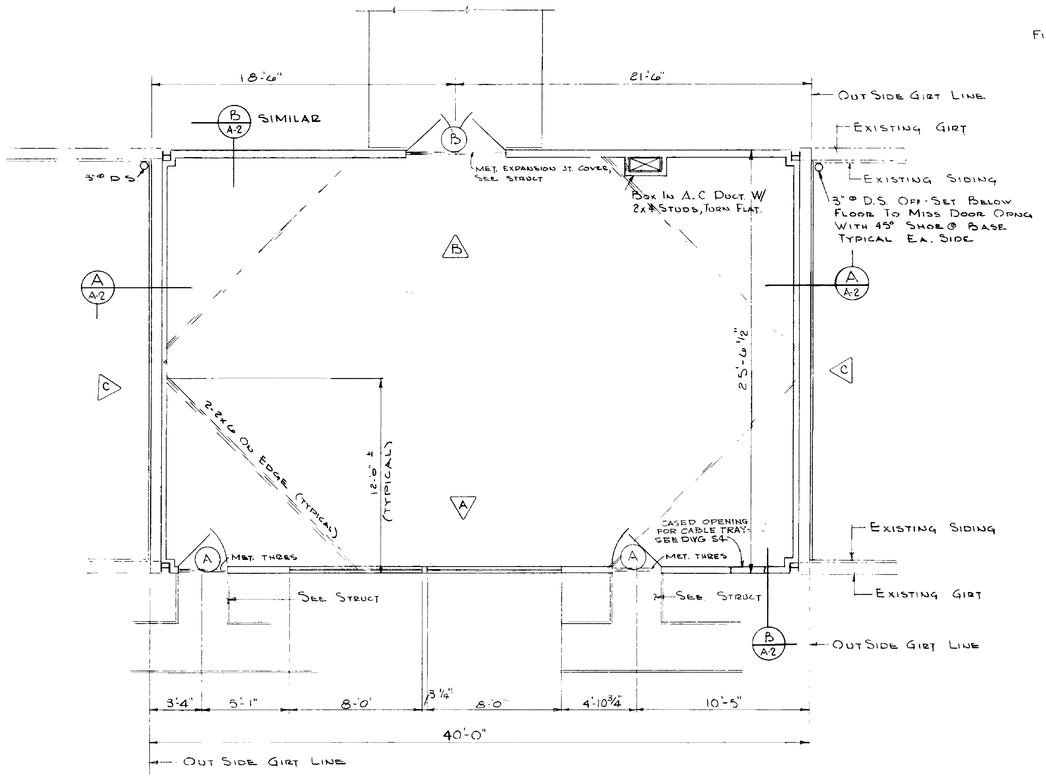

FLOOR PLAN
SCALE 1/4" = 1'-0"

DOOR & WINDOW ELEVATIONS

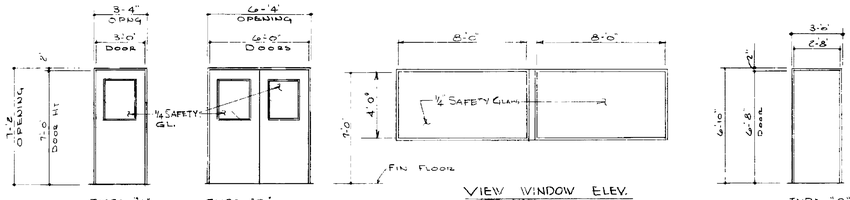

TYPE "A"
1 3/4" FLUSH HOL MET. HOL MET. FRAME (TYP)

TYPE "B"
1 3/4" FLUSH HOL MET.

NOTE:
APPROX. GLASS SIZE EA DOOR:
WIDTH 25 9/16"
HEIGHT 30 11/16"

VIEW WINDOW ELEV.

TYPE "C"
1 3/4" HOL. MET. (FLUSH) HOL MET FRAME

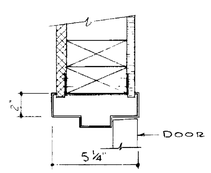

METAL FRAME DETAIL
@ 2x4 STUD WALL
SCALE 3" = 1'-0"

APPROVED FOR SAFETY
MAR 2 1 1968
DATE
SAFETY OFFICE

A-1

DESIGNED		APPROVAL RECOMMENDED:	DRWG. NO.
DRAWN	S.C.M.	CHIEF AGEN SECTION	
CHECKED		DESIGN DATE: 3-24-65	F & D-H-4619-A1
SCALE:	NOTED	SPEC. NO. 568	

REV. | BY | DATE | C.I. NO. | APPROVED

NATIONAL AERONAUTICS AND SPACE ADMINISTRATION — **M S F C** HUNTSVILLE, ALABAMA

INSTRUMENTATION ROOM FOR LOAD TEST ANNEX BLDG 4619

FLOOR PLAN, ELEVATIONS & DETAILS

NASA AE CONT. NO. | FILE NO. M S F C 9614

SUBMITTED: RLL	APPROVAL RECOMMENDED:	APPROVED:	
CHIEF		CHIEF DESIGN BRANCH	
AE. DATE: 15 MARCH 65	DAR DATE: 3-24-65	NASA DATE: 3-24-65	

MSFC-FORM 232 (REV. APRIL 1962)

4619

MSFC MASTER BID DISK 11-18-2013

NOTICE — WHEN GOVERNMENT DRAWINGS, SPECIFICATIONS, OR OTHER DATA ARE USED FOR ANY PURPOSE OTHER THAN IN CONNECTION WITH A DEFINITELY RELATED GOVERNMENT PROCUREMENT OPERATION, THE UNITED STATES GOVERNMENT THEREBY INCURS NO RESPONSIBILITY NOR ANY OBLIGATION WHATSOEVER; AND THE FACT THAT THE GOVERNMENT MAY HAVE FORMULATED, FURNISHED, OR IN ANY WAY SUPPLIED THE SAID DRAWINGS, SPECIFICATIONS OR OTHER DATA IS NOT TO BE REGARDED BY IMPLICATION OR OTHERWISE AS IN ANY MANNER LICENSING THE HOLDER OR ANY OTHER PERSON OR CORPORATION, OR CONVEYING ANY RIGHTS OR PERMISSION TO MANUFACTURE, USE, OR SELL ANY PATENTED INVENTION THAT MAY IN ANY WAY BE RELATED THERETO.

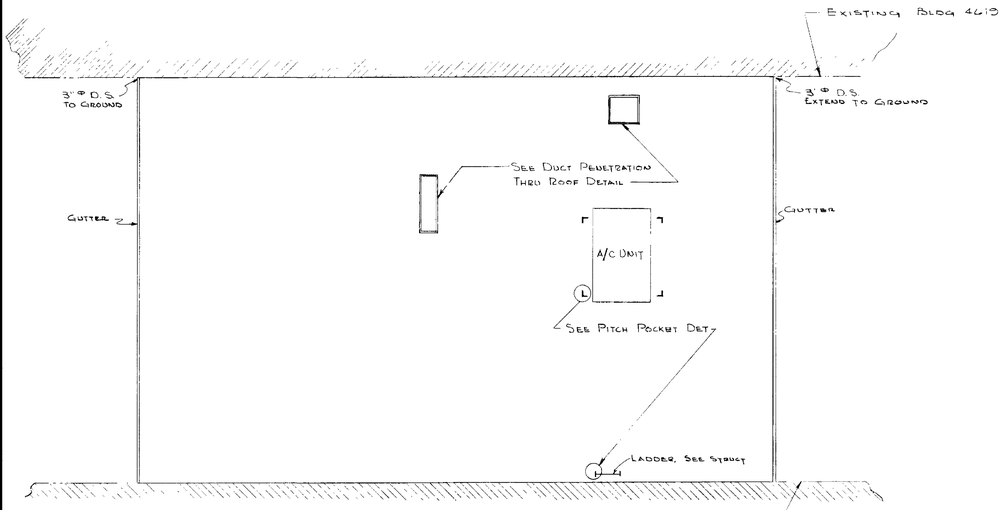

ROOF PLAN
SCALE 1/8" = 1'-0"

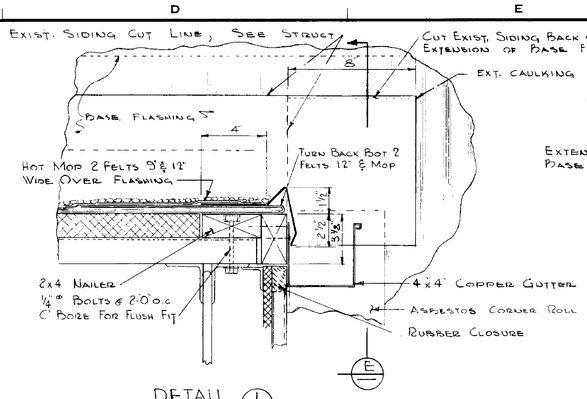

DETAIL 1
SCALE 3" = 1'-0"

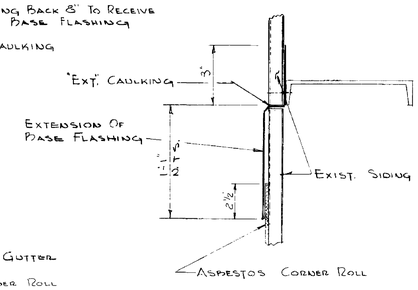

SECTION E
SCALE 3" = 1'-0"

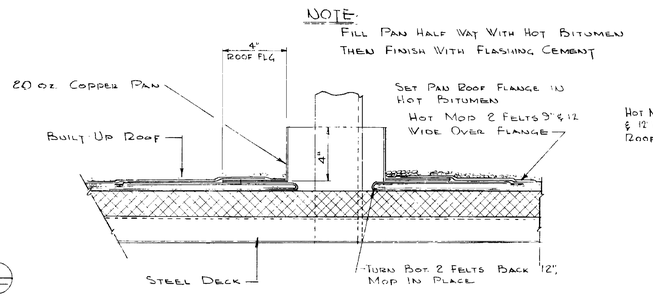

TYPICAL PITCH POCKET DETAIL
WHERE ANGLE OR BAR PENETRATES ROOF
SCALE 3" = 1'-0"

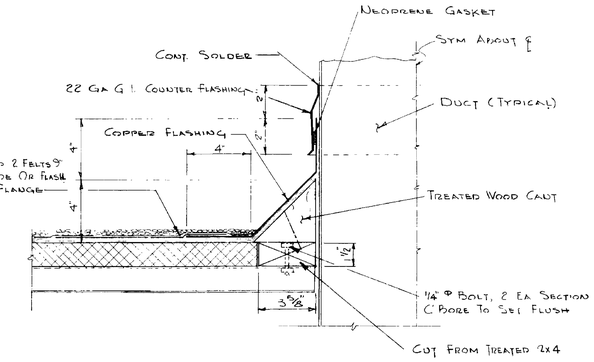

DETAIL OF DUCT PENETRATION THRU ROOF
SCALE 3" = 1'-0"

SECTION A
SCALE 1½" = 1'-0" (A-1)

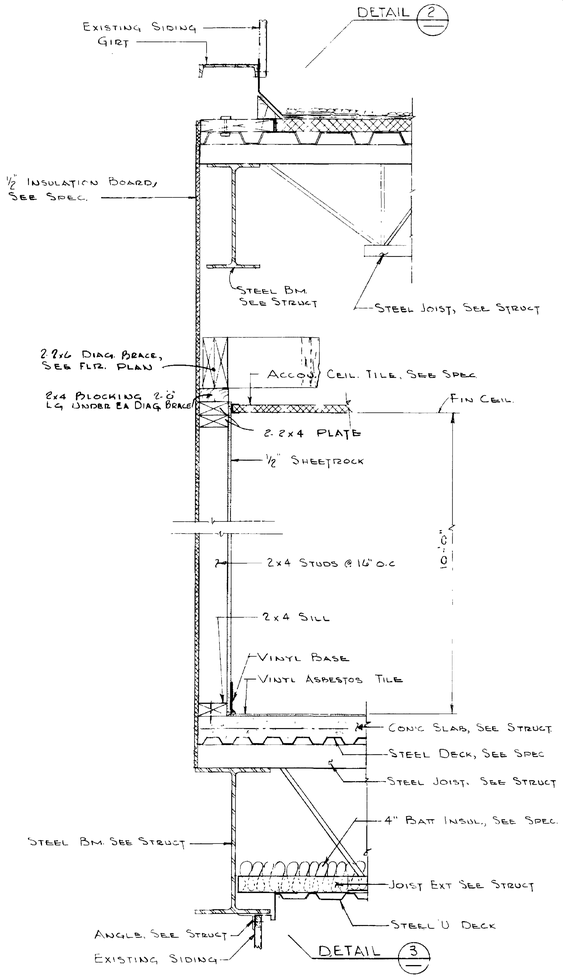

SECTION B (A-1) & B (A-1) SIMILAR
SCALE 1½" = 1'-0"

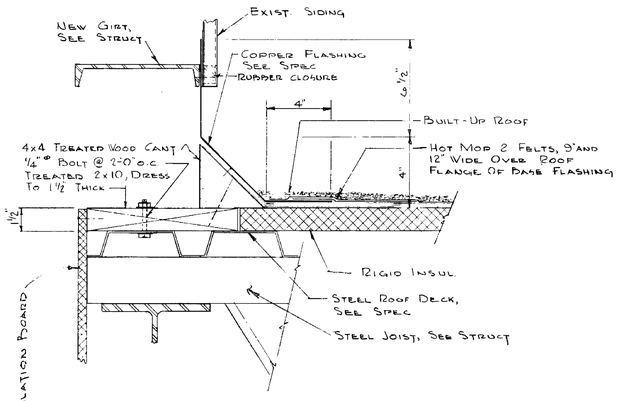

DETAIL 2
SCALE 3" = 1'-0"

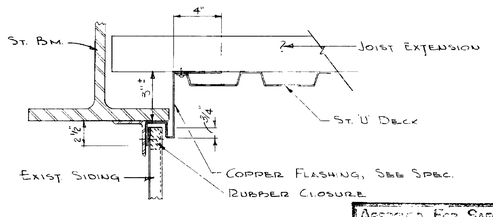

DETAIL 3
SCALE 3" = 1'-0"

REV.	BY	DATE		C.I. NO.	APPROVED

NATIONAL AERONAUTICS AND SPACE ADMINISTRATION — MSFC — HUNTSVILLE, ALABAMA

INSTRUMENTATION ROOM FOR LOAD TEST ANNEX BLDG 4619
ROOF PLAN, SECTIONS & DETAILS

NASA AE CONT. NO.		FILE NO. MSFC 9615
SUBMITTED: CHIEF, AE DATE: 18 MARCH 65	APPROVAL RECOMMENDED: LAB. DATE: 11 MAR 65	APPROVED: CHIEF, DESIGN BRANCH NASA DATE: 3-24-65
DESIGNED JCM DRAWN JCM CHECKED	APPROVAL RECOMMENDED: CHIEF, ARCH. SECTION	DRWG. NO. F&D-H-4619-A 2
SCALE: NOTED	DESIGN DATE: 3-24-65 SPEC. NO. 568	

APPROVED FOR SAFETY — MAR 21 1935 — DATE

A-2

MSFC-FORM 232 (REV. APRIL 1962)

4619

MSFC MASTER BID DISK 11-18-2013

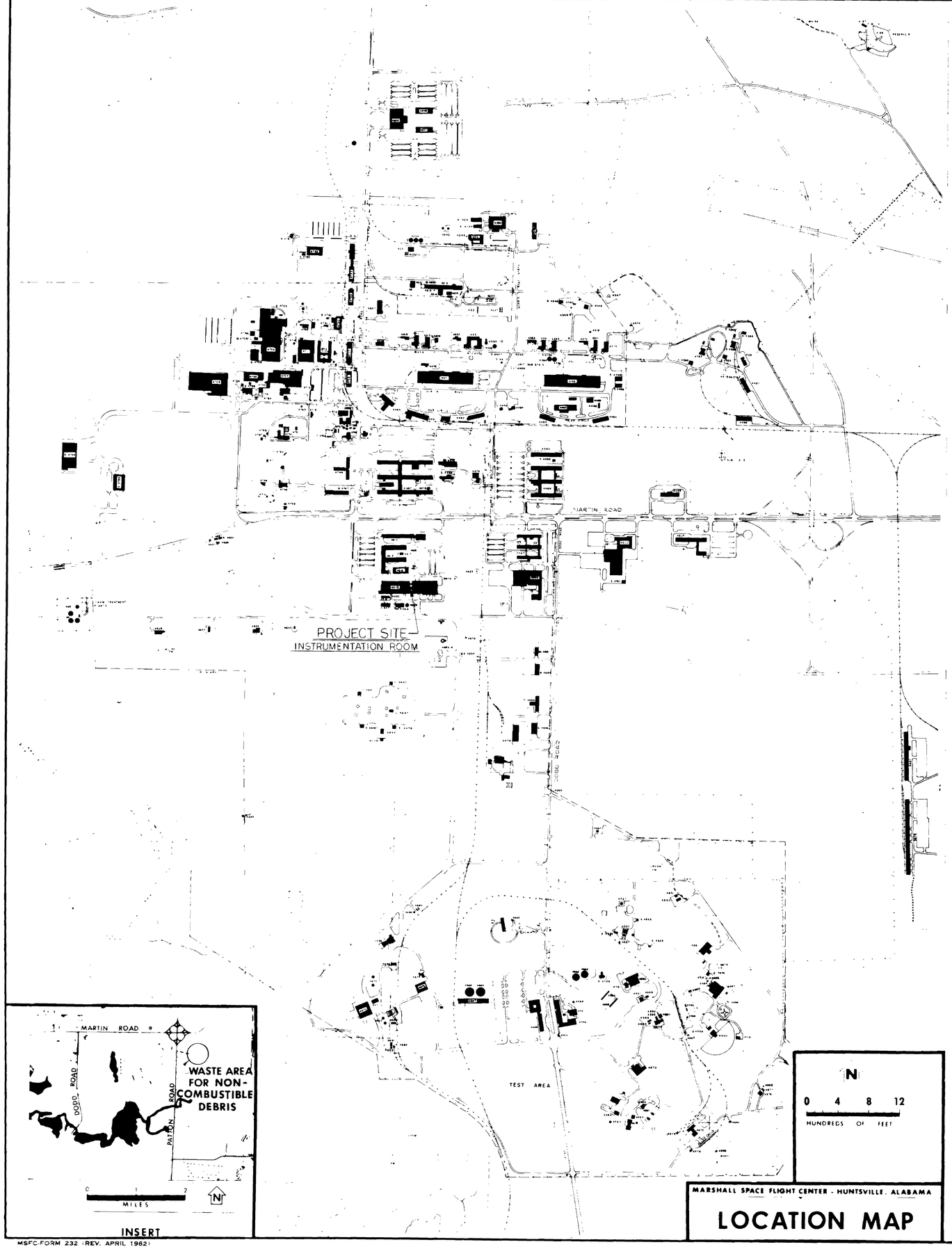

MARSHALL SPACE FLIGHT CENTER - HUNTSVILLE, ALABAMA

LOCATION MAP

DRAWING LIST

FILE NO.	DRAWING NO.	SHEET NO.	TITLE
			CIVIL
9613	F&D-H-4619-C1	C – 1	LOCATION MAP AND DRAWING LIST
			ARCHITECTURAL
9614	F&D-H-4619-A1	A – 1	FLOOR PLAN, ELEVATION AND DETAILS
9615	F&D-H-4619-A2	A – 2	ROOF PLAN, SECTIONS AND DETAILS
			STRUCTURAL
9616	F&D-H-4619-S1	S – 1	ROOF PLAN AND DETAILS
9617	F&D-H-4619-S2	S – 2	FLOOR PLANS AND DETAILS
9618	F&D-H-4619-S3	S – 3	ELEVATIONS AND DETAILS
9619	F&D-H-4619-S4	S – 4	ELEVATIONS AND DETAILS
9620	F&D-H-4619-S5	S – 5	CONCRETE FLOOR PLANS AND DETAILS
			MECHANICAL
9621	F&D-H-4619-M1	M – 1	HEATING AND AIR CONDITIONING LAYOUT
			ELECTRICAL
9622	F&D-H-4619-E1	E – 1	ELECTRICAL

REV.	BY	DATE		C.I. NO.	APPROVED

NATIONAL AERONAUTICS AND SPACE ADMINISTRATION — M S F C, HUNTSVILLE, ALABAMA

INSTRUMENTATION RM. FOR LOAD TEST ANNEX BLD'G 4619
LOCATION MAP
AND
DRAWING LIST

NASA AE CONT. NO.

FILE NO. M S F C 9613

SUBMITTED: John Finnegan, CHIEF A.E. — DATE: MARCH 19, 1965

APPROVAL RECOMMENDED: [signature], LAB — DATE: Mar 24-65

APPROVED: R D Ramsey Jr., HSFC DESIGN BRANCH — NASA DATE: 3-24-65

C-1

DESIGNED: HW
DRAWN:
CHECKED: HW
SCALE: AS NOTED

APPROVAL RECOMMENDED: [signature], CHIEF, CIVIL SECTION
DESIGN DATE: 3-24-65
SPEC. NO. 568

DRWG. NO. F & D-H-4619-C1

MSFC-FORM 232 (REV. APRIL 1962)

MSFC MASTER BID DISK 11-18-2013

NOTICE. – WHEN GOVERNMENT DRAWINGS, SPECIFICATIONS, OR OTHER DATA ARE USED FOR ANY PURPOSE OTHER THAN IN CONNECTION WITH A DEFINITELY RELATED GOVERNMENT PROCUREMENT OPERATION, THE UNITED STATES GOVERNMENT THEREBY INCURS NO RESPONSIBILITY NOR ANY OBLIGATION WHATSOEVER; AND THE FACT THAT THE GOVERNMENT MAY HAVE FORMULATED, FURNISHED, OR IN ANY WAY SUPPLIED THE SAID DRAWINGS, SPECIFICATIONS OR OTHER DATA IS NOT TO BE REGARDED BY IMPLICATION OR OTHERWISE, AS IN ANY MANNER LICENSING THE HOLDER OR ANY OTHER PERSON OR CORPORATION, OR CONVEYING ANY RIGHTS OR PERMISSION TO MANUFACTURE, USE OR SELL ANY PATENTED INVENTION THAT MAY IN ANY WAY BE RELATED THERETO.

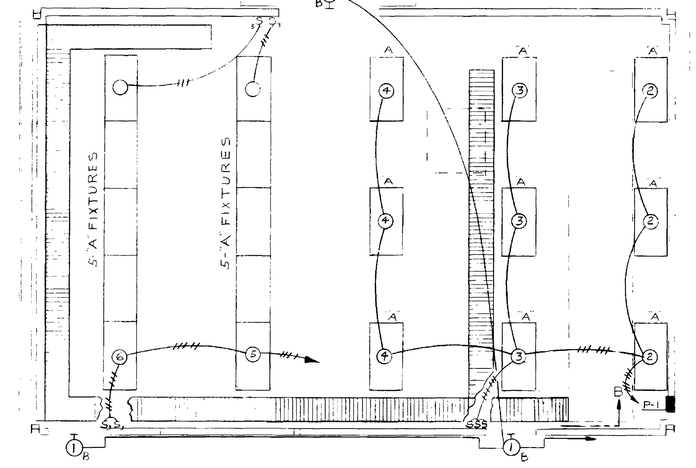

LIGHTING AND CABLE TRAY PLAN

SCALE: 1/4"=1'-0"

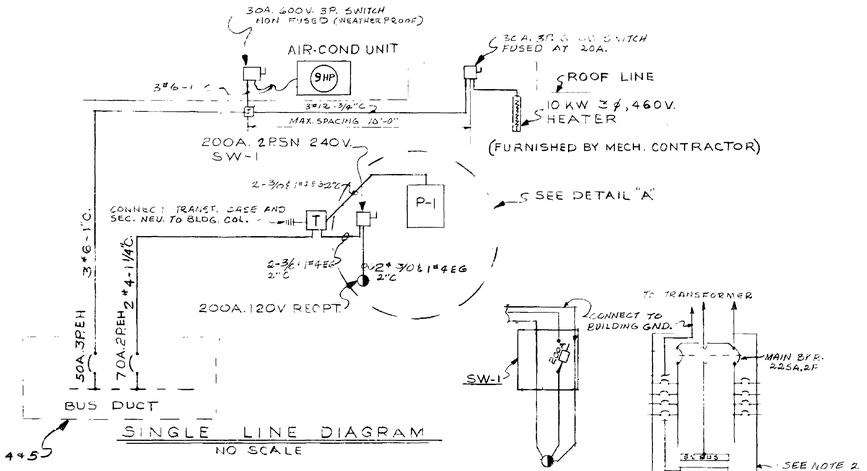

SINGLE LINE DIAGRAM

NO SCALE

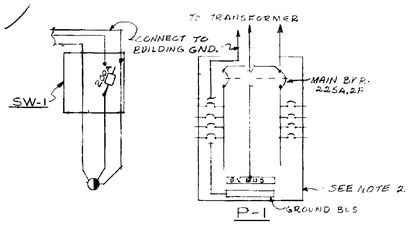

DETAIL "A"

NO SCALE

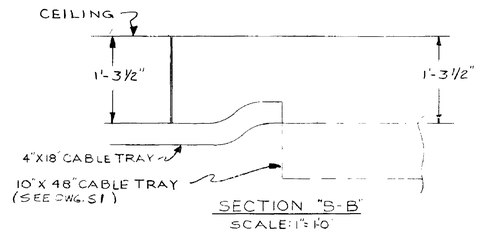

SECTION "B-B"

SCALE: 1"=1'0"

FIXTURE SCHEDULE			
MARK	LAMP	MFR + CAT. NO	DESCRIPTION
A	4-F40T12 RS/CW	WESTINGHOUSE M440F24 WOK	2'X4' FLUORESCENT FIXTURE, BAKED-ON WHITE ENAMEL FINISH. BALLASTS, ETL CERTIFIED TO CBM SPEC. WITH FREQUENCY SUPPRESSION.
B	150W	STONCO NO. 8301	SURFACE MOUNTED BRACKET FIXTURE, WITH SURFACE MOUNTING BOX NO. 8349, SILVER GRAY FINISH.

PANELBOARD SCHEDULE									
MARK	TYPE	MAINS		BRANCHES				MTD	REMARKS
		AMPS	TYPE	SERVICE	1-POLE	2-POLE	3-POLE	FUTURE		
P-1	NQC OR EQ	225	MAIN	120/240V	24-20A				FLUSH	9 SPARE BREAKERS

NOTES:

1. INSULATE COMMON NEUTRAL FROM ALL EXPOSED EQUIPMENT AND USE SEPARATE GROUND FOR ALL PANELS *AND SWITCHES.*
2. A NEUTRAL SHALL BE RUN WITH EACH CIRCUIT FROM PANEL "P-1".
3. FURNISH CAP FOR 200A. RECEPT
4. THE FEEDER SHALL EXTEND DOWN IN BLDG 4619 BETWEEN A-9 AND B-9 TO EXIST. 400A. 48"V. POWELL BUS DUCT, LOCATED ALONG COLUMN LINE 26 APPROX. 14' ABOVE FLOOR LEVEL.
5. FEEDER BREAKERS SHALL BE 70A. 2P. POWELL NO. PCB 207026 AND 50A. 3P POWELL NO. PCB 305016.

ELECTRICAL LEGEND

SYMBOL	DESCRIPTION
A ①	FLUORESCENT FIXTURE, 4 LAMP, LETTER INDICATES FIXTURE, NUMBER INDICATES CIRCUIT. (TYP)
(B)	INCANDESCENT BRACKET FIXTURE, WALL MOUNTED
S	SWITCH, SINGLE POLE FLUSH MT.
S_3	SWITCH, THREE WAY FLUSH MT.
	DUPLEX RECEPTACLE, 15AMP, 125V. 3P. (1P. GRD) HUMBELL NO. 52CM07 OR EQ.
	SINGLE RECEPTACLE, 30AMP, 125V. 3P. (1P GRD) HUMBELL NO. 3330 OR EQ.
	SINGLE RECEPTACLE, 200AMP, 125V. 2P. AND GRND. PYLE-NATIONAL CAT. JRCBB-720036 WITH MATCHING PLUG CAT. JPM-2120036 OR EQ.
	DISCONNECT SWITCH, FUSED. SEE SPEC.
	ELECTRICAL PANEL, SEE SCHEDULE
T	TRANSFORMER, DRY TYPE 480-120 VOLT, 25 KVA.
	ELECTRIC STRIP HEATER, RATING AS SHOWN (SEE MECH. DWG.)
	HOME RUN TO PANEL, 3/4" MIN. CONDUIT
	BRANCH CIRCUIT, CONCEALED OVERHEAD OR IN WALLS 2#12-3/4"C., 3#12-3/4"C., 4#12-3/4"C., 5#12-3/4"C., 6#12-1"C.
	BRANCH CIRCUIT CONCEALED IN FLOOR, OR BELOW FLOOR. DO. DO., EXPOSED
	CABLE TRAY, SIZE AS SHOWN. (SEE SPEC.)
	BREAKER SIZE & TYPE AS SHOWN
	EMERGENCY LIGHT SHALL BE EXIDE LIGHTGUARD OR EQ. A.C. INPUT 115V. 60 CY. 25W. MAX. LAMP WATTS (90W 6V)

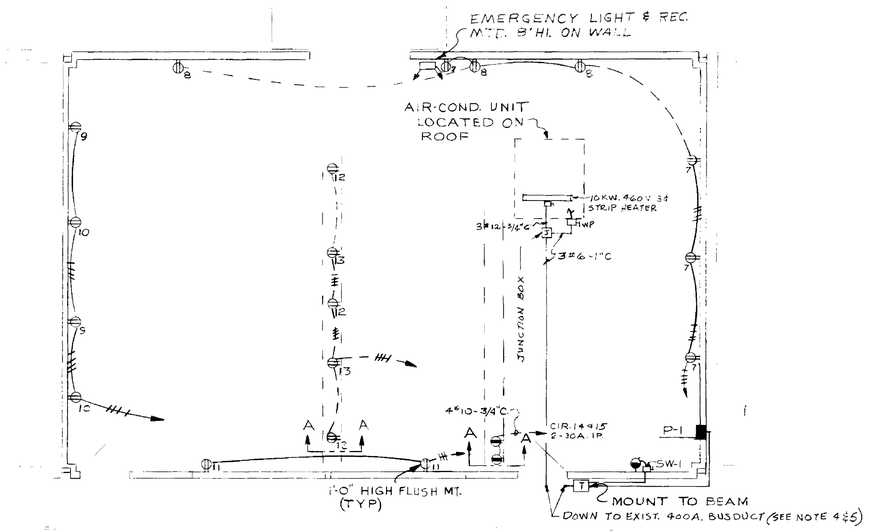

POWER PLAN

SCALE: 1/4"=1'-0"

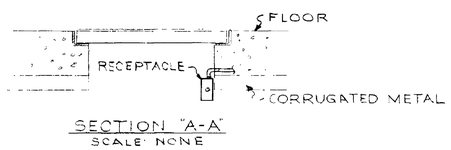

SECTION "A-A"

SCALE: NONE

REV.	BY	DATE		C.I. NO.	APPROVED

NATIONAL AERONAUTICS AND SPACE ADMINISTRATION — M S F C, HUNTSVILLE, ALABAMA

INSTRUMENTATION ROOM FOR LOAD TEST ANNEX BLDG 4619

ELECTRICAL

NASA AE CONT. NO.

FILE NO. M S F C 9622

SUBMITTED: CHIEF AE, DATE: 3-19-65

APPROVAL RECOMMENDED: L&R, DATE: 11-11-64

APPROVED: CHIEF DESIGN BRANCH, NASA, DATE: 3-24-65

DESIGNED W. G. Brewer, DRAWN W. G. Brewer, CHECKED

APPROVAL RECOMMENDED: Ed. Henrijean, DESIGN DATE: 3-23-65, SPEC. NO. 568

DRWG. NO. F&D-H-4619-E1

SCALE: 1/4"=1'-0"

E-1

MSFC-FORM 232 (REV. APRIL 1962)

MSFC MASTER BID DISK 11-18-2013

NOTICE. — WHEN GOVERNMENT DRAWINGS, SPECIFICATIONS, OR OTHER DATA ARE USED FOR ANY PURPOSE OTHER THAN IN CONNECTION WITH A DEFINITELY RELATED GOVERNMENT PROCUREMENT OPERATION, THE UNITED STATES GOVERNMENT THEREBY INCURS NO RESPONSIBILITY NOR ANY OBLIGATION WHATSOEVER; AND THE FACT THAT THE GOVERNMENT MAY HAVE FORMULATED, FURNISHED, OR IN ANY WAY SUPPLIED THE SAID DRAWINGS, SPECIFICATIONS OR OTHER DATA IS NOT TO BE REGARDED BY IMPLICATION OR OTHERWISE AS IN ANY MANNER LICENSING THE HOLDER OR ANY OTHER PERSON OR CORPORATION, OR CONVEYING ANY RIGHTS OR PERMISSION TO MANUFACTURE, USE OR SELL ANY PATENTED INVENTION THAT MAY IN ANY WAY BE RELATED THERETO.

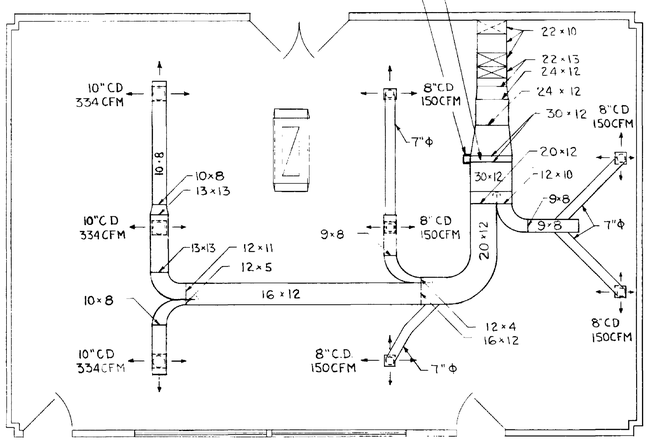

DUCT WORK OVER CEILING

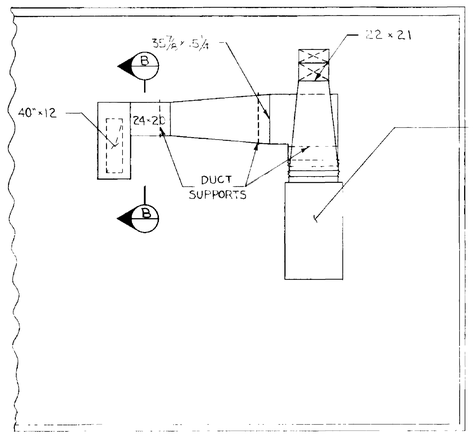

DUCT WORK ON ROOF

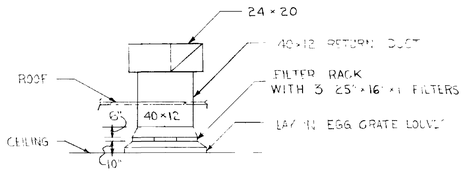

SECTION B-B

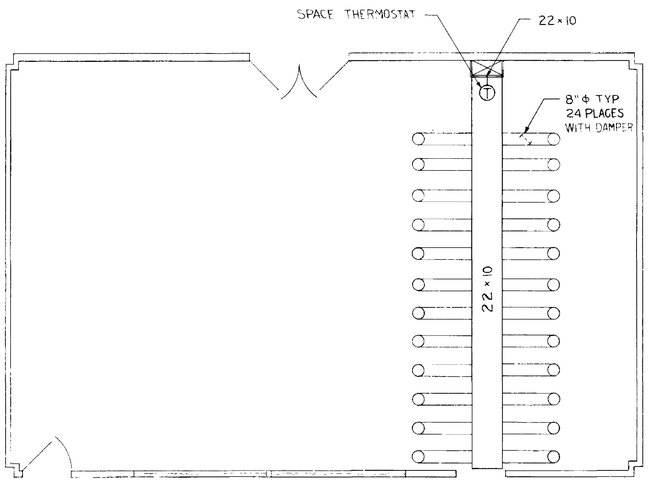

DUCT WORK UNDER FLOOR

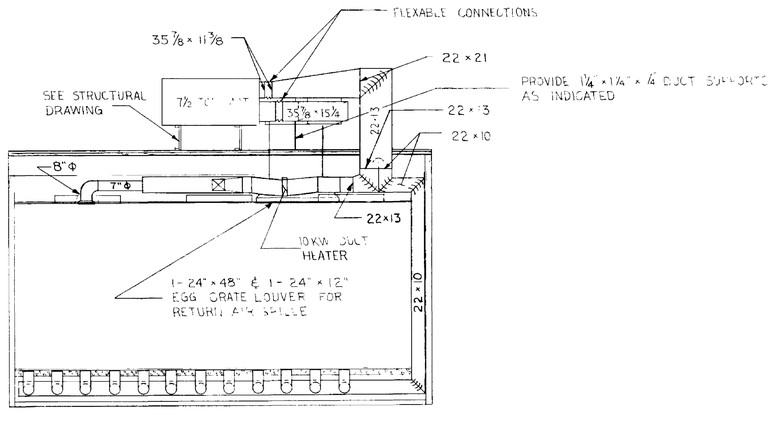

SECTION A-A

NOTES

1. INSULATE ALL DUCT WORK EXPOSED TO OUTSIDE WEATHER CONDITIONS WITH 1" DUCT LINER AND 2" VAPOR BACKED WRAPPED INSULATION, WEATHER PROOFED WITH RAIN TIGHT COVER AND SEALER.
2. DUCT WEATHER PROOFING SHALL BE WIND RESISTANT.
3. DUCT LOCATED OVER CEILING SHALL BE INSULATED WITH 1" VAPOR BACKED OUTSIDE INSULATION.
4. ALL DUCT SIZES ARE NET AND SHALL BE EXPANDED TO PROVIDE FOR INTERNAL INSULATION.
5. FILTER AND HEATER RACKS SHALL BE MOUNTED TO ALLOW REMOVAL WITHOUT INTERFERANCE OF OTHER EQUIPMENT.
6. EGG CRATE LOUVER RETURN TO PROVIDE NOT LESS THAN 70% FREE AIR AREA.
7. STRIP HEATER CONTACTOR SHALL BE CONTROLLED BY THE HEATING CONTROL OF THE SPACE THERMOSTAT. IT SHALL BE INTERLOCKED WITH THE AIR CONDITIONING INSIDE BLOWER FAN TO OPERATE WHEN STRIP HEATER IS ON.
8. THE THERMOSTAT FAN SWITCH SHALL BE SET IN THE "ON" POSITION TO PROVIDE CONTINUOUS COOLING OF ELECTRONIC EQUIPMENT.

REV.	BY	DATE		C.I. NO.	APPROVED

NATIONAL AERONAUTICS AND SPACE ADMINISTRATION — M S F C, HUNTSVILLE, ALABAMA

INSTRUMENTATION ROOM FOR LOAD TEST ANNEX BLD'G 4619
HEATING & AIR CONDITIONING LAYOUT

NASA AE CONT. NO.

FILE NO. M S F C 9621

SUBMITTED: CHIEF A.E. DATE: 3-19-65

APPROVAL RECOMMENDED: LAB. DATE: MARCH 24, 1965

APPROVED: CHIEF, DESIGN BRANCH NASA DATE: 3-24-65

DESIGNED O'DANIEL
DRAWN O'DANIEL
CHECKED
SCALE: ¼" = 1'-0"

APPROVAL RECOMMENDED: DESIGN DATE: 3-24-65

SPEC. NO. 368

DRWG. NO. F & D-H-4619-MI

MAR 24 1965

MSFC-FORM 232 (REV. APRIL 1962)

4619

MSFC MASTER BID DISK 11-18-2013

NOTICE — WHEN GOVERNMENT DRAWINGS, SPECIFICATIONS, OR OTHER DATA ARE USED FOR ANY PURPOSE OTHER THAN IN CONNECTION WITH A DEFINITELY RELATED GOVERNMENT PROCUREMENT OPERATION, THE UNITED STATES GOVERNMENT THEREBY INCURS NO RESPONSIBILITY NOR ANY OBLIGATION WHATSOEVER; AND THE FACT THAT THE GOVERNMENT MAY HAVE FORMULATED, FURNISHED, OR IN ANY WAY SUPPLIED THE SAID DRAWINGS, SPECIFICATIONS OR OTHER DATA IS NOT TO BE REGARDED BY IMPLICATION OR OTHERWISE, AS IN ANY MANNER LICENSING THE HOLDER OR ANY OTHER PERSON OR CORPORATION, OR CONVEYING ANY RIGHTS OR PERMISSION TO MANUFACTURE, USE OR SELL ANY PATENTED INVENTION THAT MAY IN ANY WAY BE RELATED THERETO.

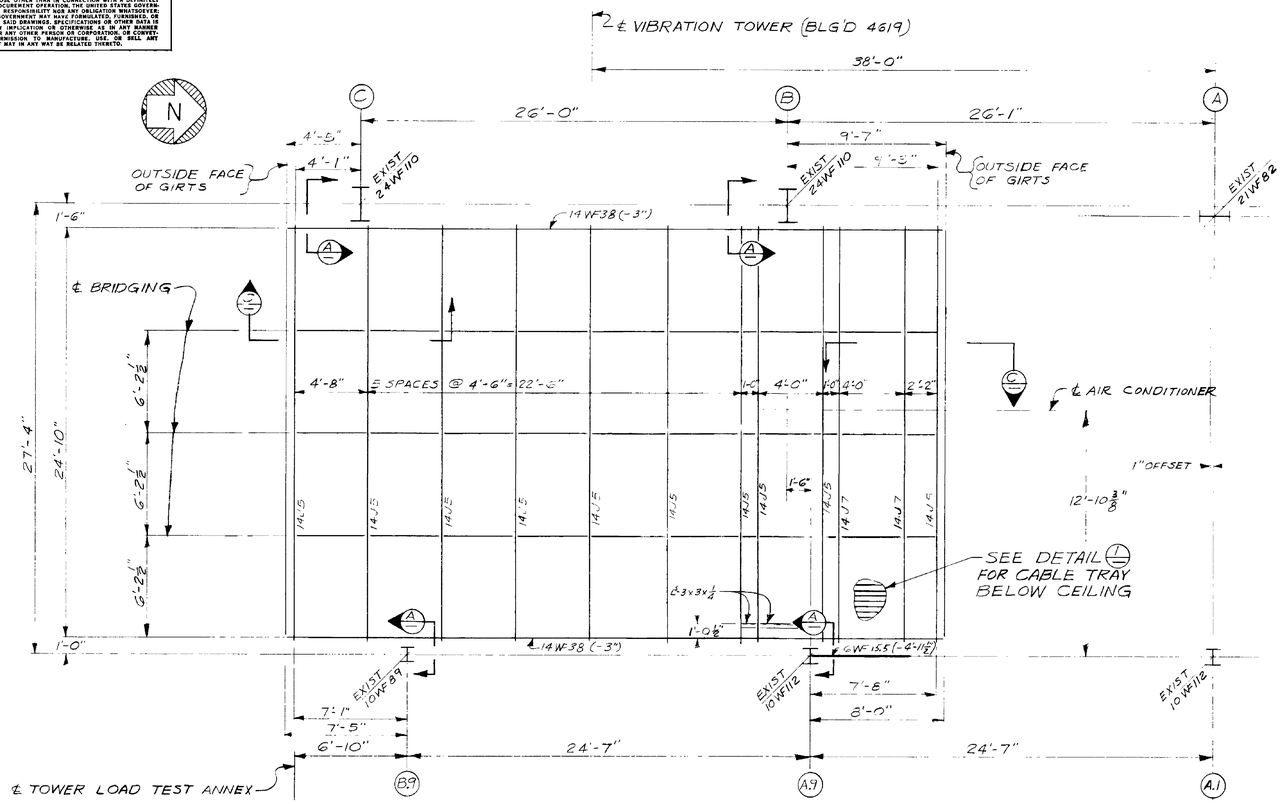

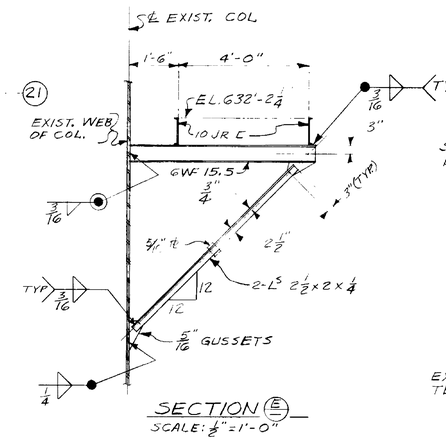

SECTION (E)
SCALE: ½"=1'-0"

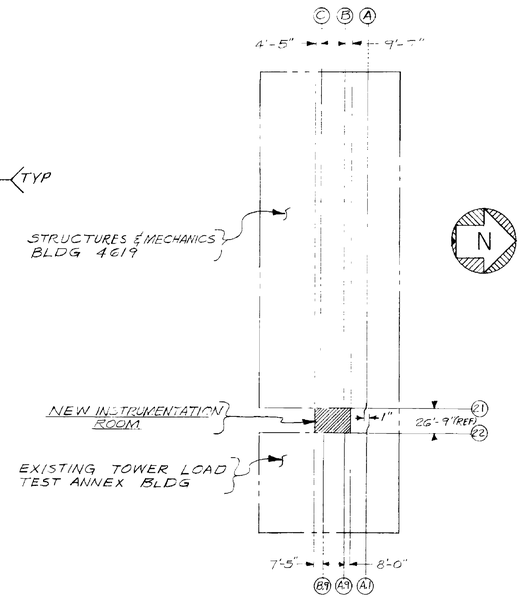

KEY PLAN
SCALE: 1" = 75'-0"

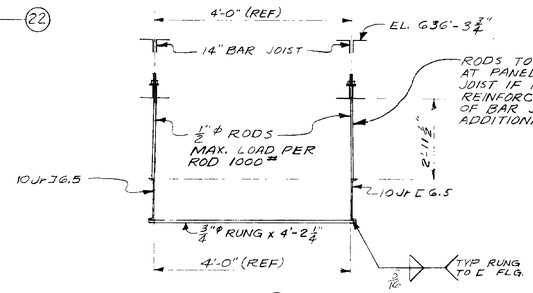

SECTION (D)
SCALE: ¾"=1'-0"

ROOF PLAN - INSTRUMENTATION ROOM
ELEVATION TOP OF BAR JOIST = G36'-3¾"
SCALE: ¼"=1'-0"

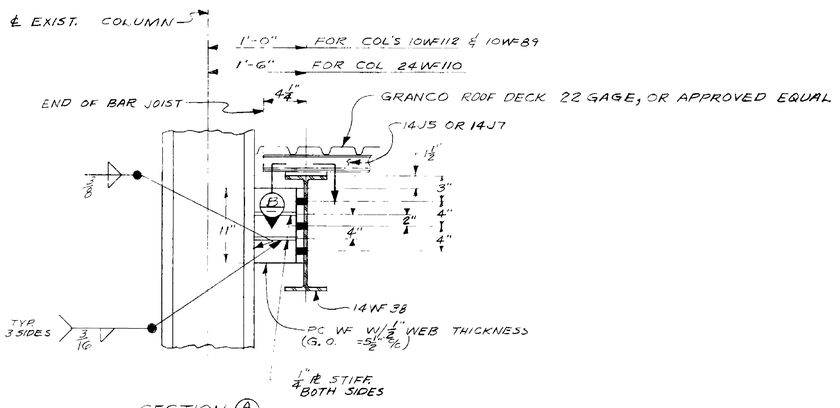

SECTION (A)
SCALE: NONE

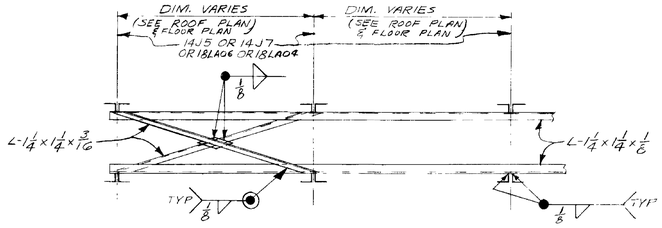

SECTION (C) (C2)
SCALE: NONE

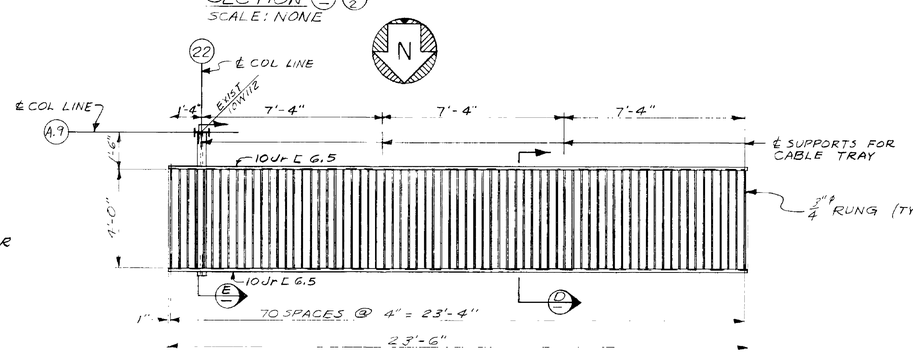

DETAIL (1) CABLE TRAY
SCALE: ⅜"=1'-0"

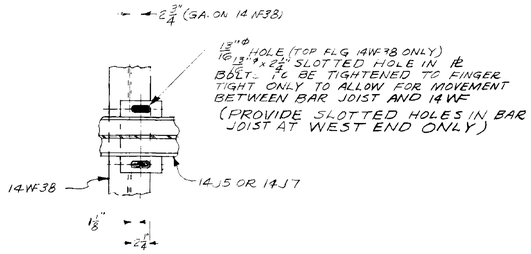

SECTION (B)
SCALE: 1½"=1'-0"

GENERAL NOTES:

1. ALL STRUCTURAL STEEL SHALL CONFORM TO ASTM A-36 SPECIFICATIONS UNLESS OTHERWISE NOTED.
2. DESIGN, FABRICATION AND ERECTION SHALL BE IN ACCORDANCE WITH LATEST A.I.S.C. SPECIFICATIONS.
3. ALL BOLTS SHALL BE ¾"ϕ ASTM A-325 UNLESS OTHERWISE NOTED.
4. BOLT HOLES SHALL NOT BE CUT OR ENLARGED BY FLAME CUTTING.
5. TEMPORARY BRACING SHALL BE PROVIDED AS NECESSARY FOR ERECTION LOADINGS APPLIED TO STEEL FRAMING.
6. ALL BOLT HOLES TO BE 13/16"ϕ UNLESS OTHERWISE NOTED.
7. FIN. FLOOR ELEVATION 581.00'
8. ALL CONNECTIONS NOT OTHERWISE DETAILED SHALL BE DETAILED BY FABRICATOR.

DESIGN DATA:
ROOF LIVE LOAD = 30 #/□'
FLOOR LIVE LOAD = 80 #/□' UNLESS NOTED OTHERWISE.

REV.	BY	DATE	C.I. NO.	APPROVED

NATIONAL AERONAUTICS AND SPACE ADMINISTRATION — M S F C — HUNTSVILLE, ALABAMA

INSTRUMENTATION RM. FOR LOAD TEST ANNEX BLD'G 4619

ROOF PLAN AND DETAILS

NASA AE CONT. NO.

FILE NO. MSFC 9616

SUBMITTED: [signature] CHIEF AE. DATE: MARCH 19, 1965

APPROVAL RECOMMENDED: [signature] LAB. DATE: MAR 24-65

APPROVED: [signature] CHIEF, DESIGN BRANCH NASA DATE: 3-24-65

DESIGNED HHW DRAWN JTC CHECKED HHW

APPROVAL RECOMMENDED: [signature] CHIEF, STRUCT. SECTION DESIGN DATE: 3-24-65

SCALE: AS NOTED SPEC. NO. 568

DRWG. NO. F&D-H-4619-S1

APPROVED FOR SAFETY — MAR 24 1965 — DATE

S-1

MSFC-FORM 232 (REV. APRIL 1962)

MSFC MASTER BID DISK 11-18-2013

NOTICE. – WHEN GOVERNMENT DRAWINGS, SPECIFICATIONS, OR OTHER DATA ARE USED FOR ANY PURPOSE OTHER THAN IN CONNECTION WITH A DEFINITELY RELATED GOVERNMENT PROCUREMENT OPERATION, THE UNITED STATES GOVERNMENT THEREBY INCURS NO RESPONSIBILITY NOR ANY OBLIGATION WHATSOEVER; AND THE FACT THAT THE GOVERNMENT MAY HAVE FORMULATED, FURNISHED, OR IN ANY WAY SUPPLIED THE SAID DRAWINGS, SPECIFICATIONS OR OTHER DATA IS NOT TO BE REGARDED BY IMPLICATION OR OTHERWISE AS IN ANY MANNER LICENSING THE HOLDER OR ANY OTHER PERSON OR CORPORATION, OR CONVEYING ANY RIGHTS OR PERMISSION TO MANUFACTURE, USE, OR SELL ANY PATENTED INVENTION THAT MAY IN ANY WAY BE RELATED THERETO.

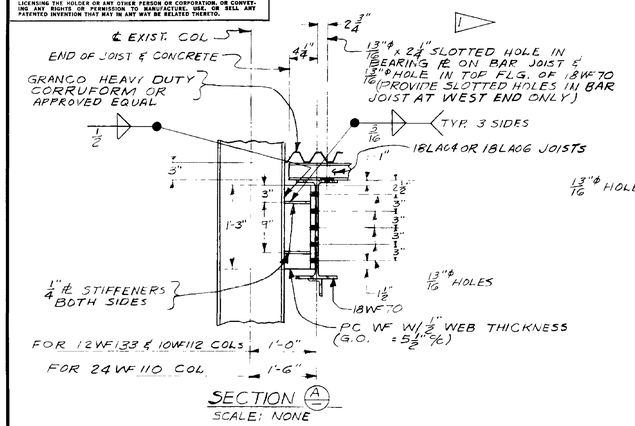

SECTION (A)
SCALE: NONE

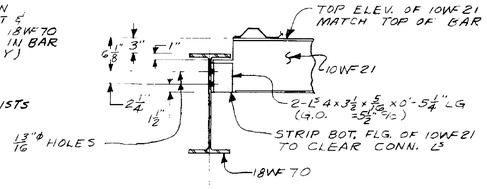

SECTION (B)
SCALE: 1"=1'-0"
(TYP. 3 PLACES)

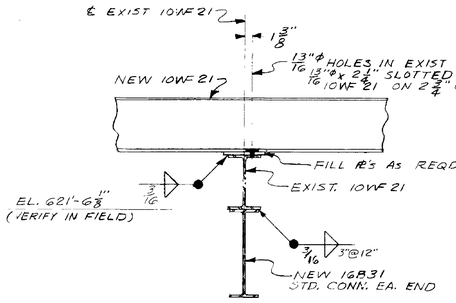

SECTION (D)
TYPICAL 3 PLACES
SCALE: 1"=1'-0"

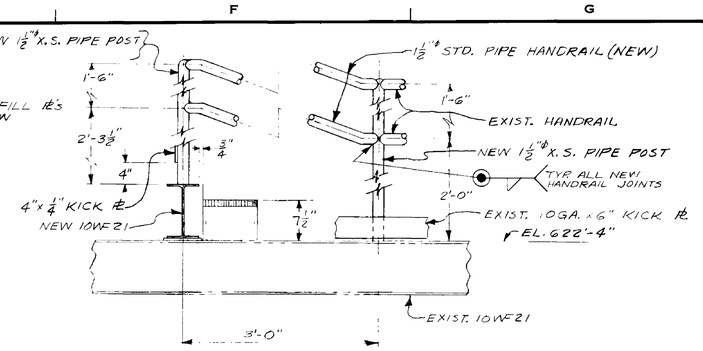

SECTION (G)
SCALE: 1"=1'-0"

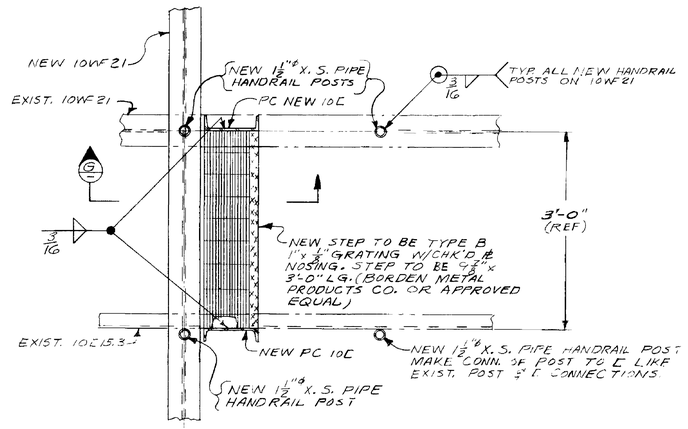

VIEW (E) AS SHOWN
SCALE: 1"=1'-0"

VIEW (F) OPPOSITE HAND

KEY PLAN
SCALE: 1"=75'-0"

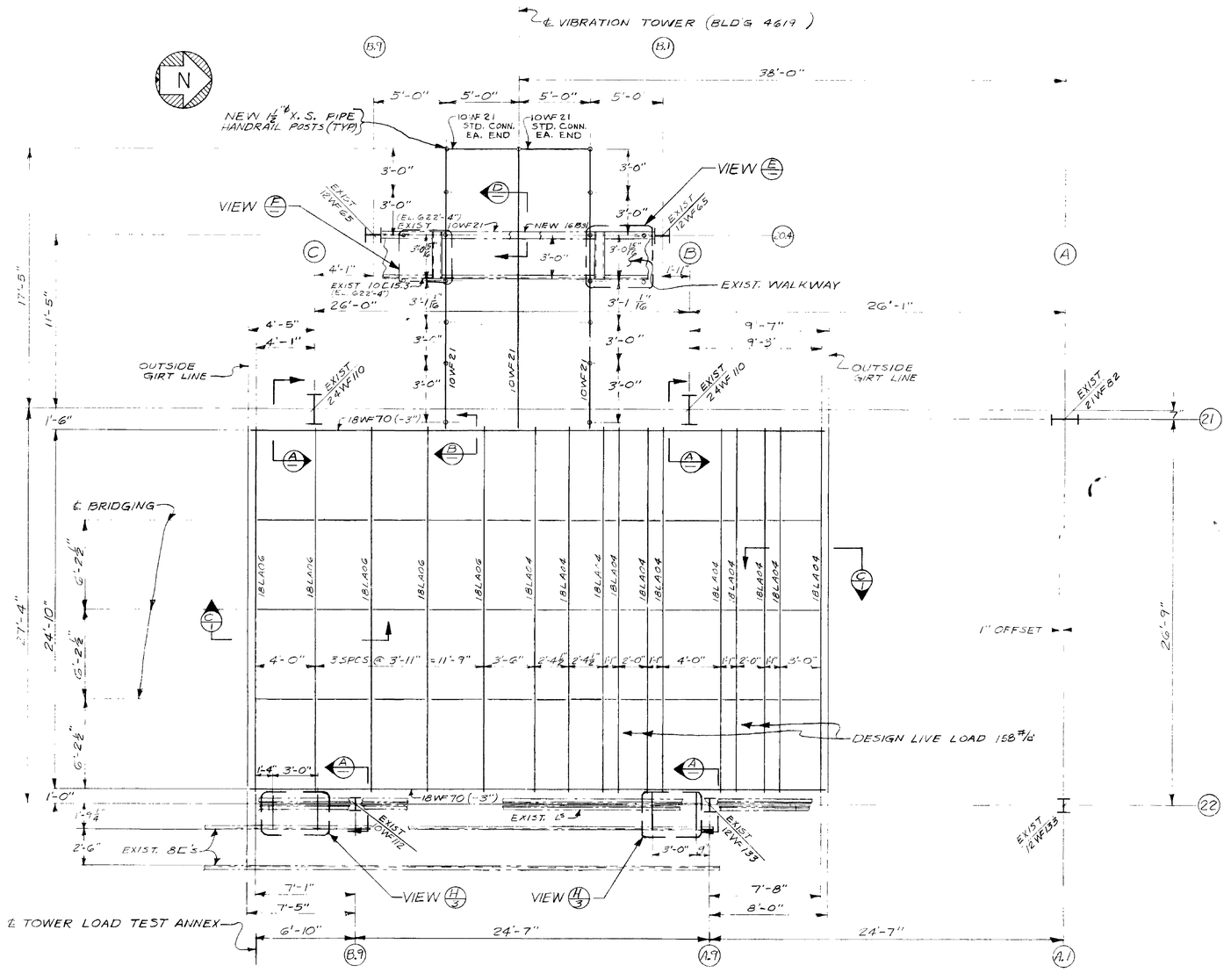

FLOOR PLAN – INSTRUMENTATION ROOM
ELEVATION TOP OF BAR JOIST = 623'-2 1/4"
SCALE: 1/4" = 1'-0"

NOTE:
1. BOLTS TO BE TIGHTENED TO FINGER TIGHT ONLY TO ALLOW FOR MOVEMENT BETWEEN STRUCTURAL MEMBERS AT SLOTTED HOLES.

REV.	BY	DATE		C.I. NO.	APPROVED

NATIONAL AERONAUTICS AND SPACE ADMINISTRATION — M S F C, HUNTSVILLE, ALABAMA

INSTRUMENTATION RM. FOR LOAD TEST ANNEX BLDG 4619

FLOOR PLAN AND DETAILS

NASA AE CONT. NO.		FILE NO. M S F C 9617
SUBMITTED: Chief, AE Branch — DATE: MARCH 19, 1965	APPROVAL RECOMMENDED: Chief, Lab — DATE: Mar 24 '65	APPROVED: Chief, Design Branch — NASA DATE: 3-24-65
DESIGNED: EHW; DRAWN: JTC; CHECKED: EHW	APPROVAL RECOMMENDED: Chief, Struct. Section — DESIGN DATE: 3-24-65	DRWG. NO. F&D-H-4619-S2
SCALE: AS NOTED	SPEC. NO. 567	

S-2

MAR 24 1995

MSFC-FORM 232 (REV. APRIL 1962)

MSFC MASTER BID DISK 11-18-2013

NOTICE — WHEN GOVERNMENT DRAWINGS, SPECIFICATIONS, OR OTHER DATA ARE USED FOR ANY PURPOSE OTHER THAN IN CONNECTION WITH A DEFINITELY RELATED GOVERNMENT PROCUREMENT OPERATION, THE UNITED STATES GOVERNMENT THEREBY INCURS NO RESPONSIBILITY NOR ANY OBLIGATION WHATSOEVER; AND THE FACT THAT THE GOVERNMENT MAY HAVE FORMULATED, FURNISHED, OR IN ANY WAY SUPPLIED THE SAID DRAWINGS, SPECIFICATIONS, OR OTHER DATA IS NOT TO BE REGARDED BY IMPLICATION OR OTHERWISE AS IN ANY MANNER LICENSING THE HOLDER OR ANY OTHER PERSON OR CORPORATION, OR CONVEYING ANY RIGHTS OR PERMISSION TO MANUFACTURE, USE, OR SELL ANY PATENTED INVENTION THAT MAY IN ANY WAY BE RELATED THERETO.

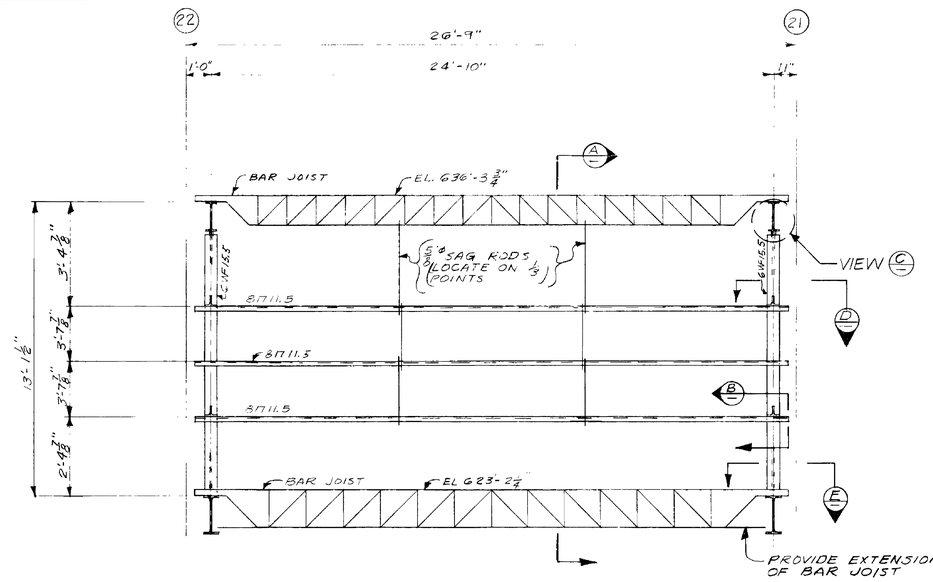

NORTH ELEVATION
SCALE: NONE

SOUTH ELEVATION OPPOSITE HAND

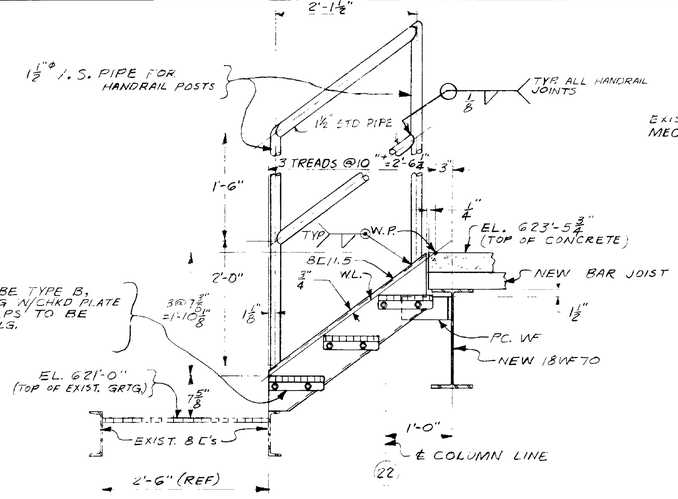

SECTION G
SCALE: 1" = 1'-0"

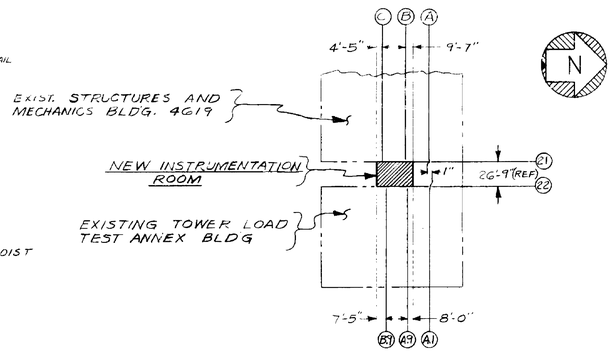

KEY PLAN
SCALE: 1" = 75'-0"

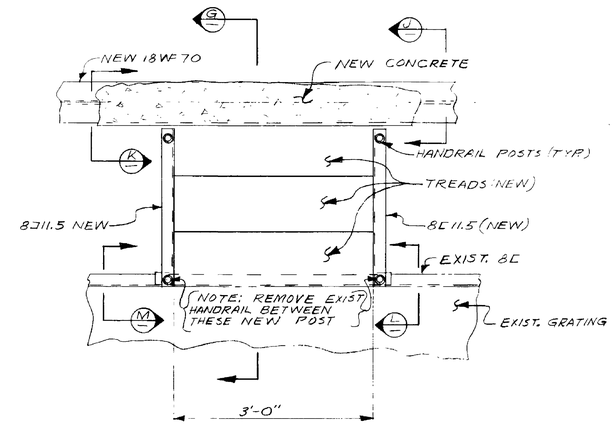

VIEW H
SCALE: 1" = 1'-0"

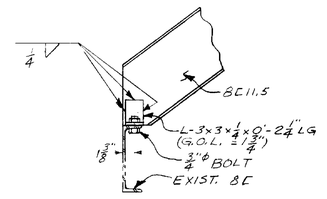

SECTION L AS SHOWN
SCALE: 1½" = 1'-0"

SECTION M OPPOSITE HAND

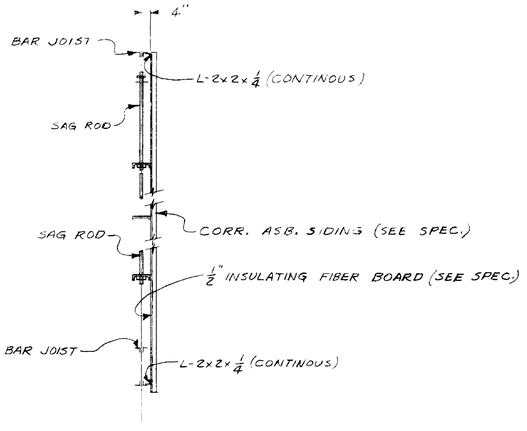

SECTION A
SCALE: ⅜" = 1'-0"

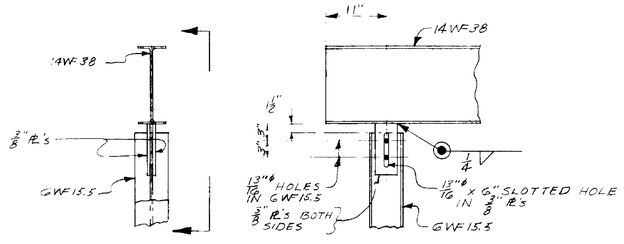

VIEW C
TYP. 2 PLACES
SCALE: 1" = 1'-0"

NOTES:
1. SOURCE: BORDEN METAL PRODUCTS CO. LEEDS, ALABAMA, OR APPROVED EQUAL

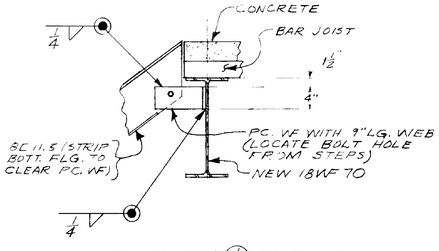

SECTION J AS SHOWN
SCALE: 1" = 1'-0"

SECTION K OPPOSITE HAND

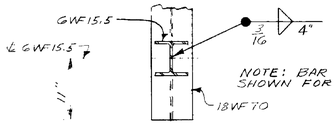

SECTION E
TYP. POST CONN. TO 18WF70
SCALE: 1" = 1'-0"

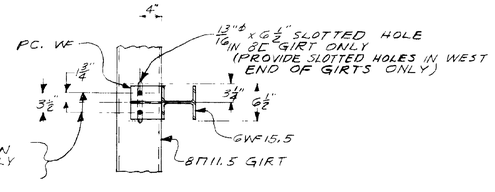

SECTION N
SCALE: 1" = 1'-0"

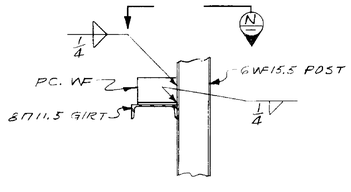

SECTION B
TYP. GIRT CONNECTION
SCALE: 1" = 1'-0"

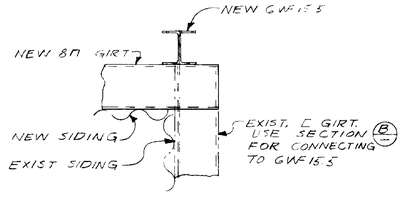

SECTION D
TYPICAL FOR SHOWING NEW & EXIST. GIRTS
SCALE: 1" = 1'-0"

REV.	BY	DATE		C.I. NO.	APPROVED

NATIONAL AERONAUTICS AND SPACE ADMINISTRATION — M S F C, HUNTSVILLE, ALABAMA

INSTRUMENTATION RM. FOR LOAD TEST ANNEX BLDG 4619

ELEVATIONS AND DETAILS

NASA AE CONT. NO. — FILE NO. MSFC 9618

SUBMITTED: CHIEF, AE DATE: MARCH 19, 1965
APPROVAL RECOMMENDED: L&R DATE: (illegible) 24-65
APPROVED: CHIEF, DESIGN BRANCH, NASA DATE: 3.24.65

DESIGNED EHW
DRAWN JTC
CHECKED EHW
APPROVAL RECOMMENDED: CHIEF, STRUCT. SECTION
DESIGN DATE: 3-22-65
SCALE: AS NOTED
SPEC. NO. 568
DRWG. NO. F&D-H-4619-S3

MAR 24 1965

S-3

MSFC-FORM 232 (REV. APRIL 1962)

MSFC MASTER BID DISK 11-18-2013

NOTICE – WHEN GOVERNMENT DRAWINGS, SPECIFICATIONS, OR OTHER DATA ARE USED FOR ANY PURPOSE OTHER THAN IN CONNECTION WITH A DEFINITELY RELATED GOVERNMENT PROCUREMENT OPERATION, THE UNITED STATES GOVERNMENT THEREBY INCURS NO RESPONSIBILITY NOR ANY OBLIGATION WHATSOEVER; AND THE FACT THAT THE GOVERNMENT MAY HAVE FORMULATED, FURNISHED, OR IN ANY WAY SUPPLIED THE SAID DRAWINGS, SPECIFICATIONS OR OTHER DATA IS NOT TO BE REGARDED BY IMPLICATION OR OTHERWISE AS IN ANY MANNER LICENSING THE HOLDER OR ANY OTHER PERSON OR CORPORATION, OR CONVEYING ANY RIGHTS OR PERMISSION TO MANUFACTURE, USE OR SELL ANY PATENTED INVENTION THAT MAY IN ANY WAY BE RELATED THERETO.

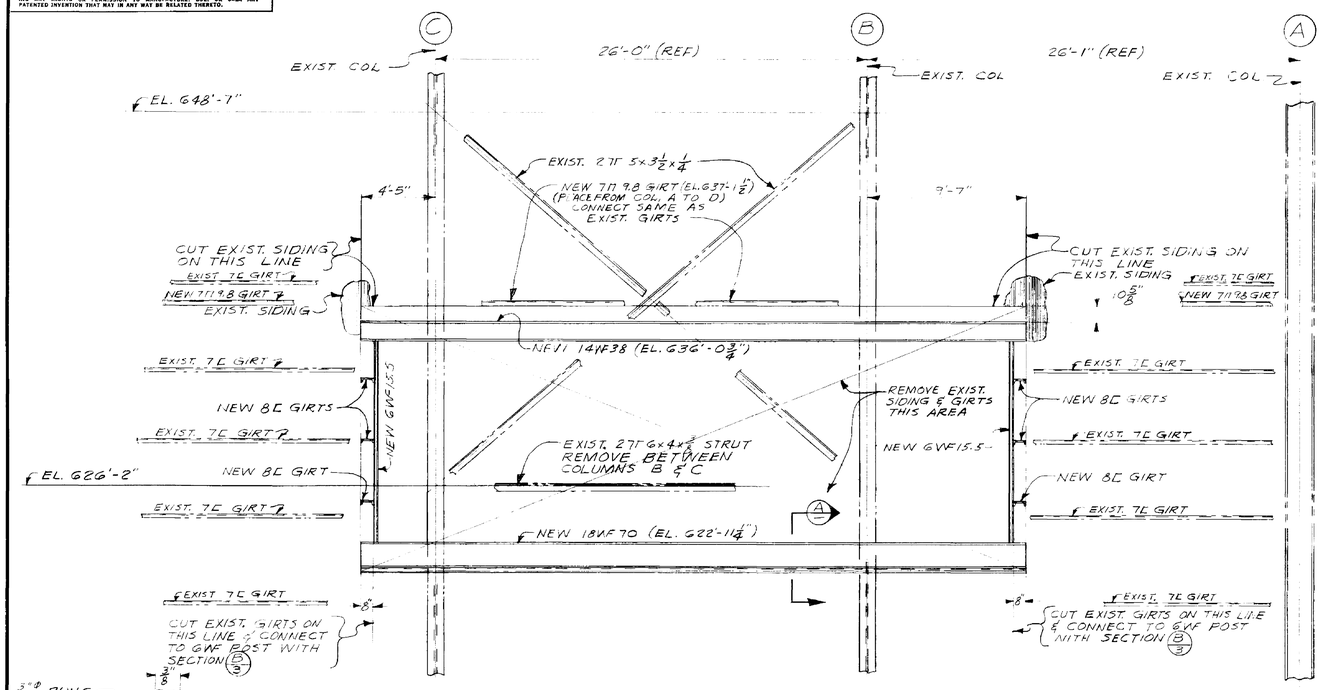

PARTIAL ELEVATION STRUCTURES AND MECHANICS BLDG.
SCALE: ¼" = 1'-0"

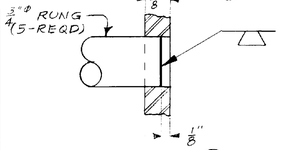

SECTION G/3 (TYP RUNG WELDMENT)
SCALE: FULL

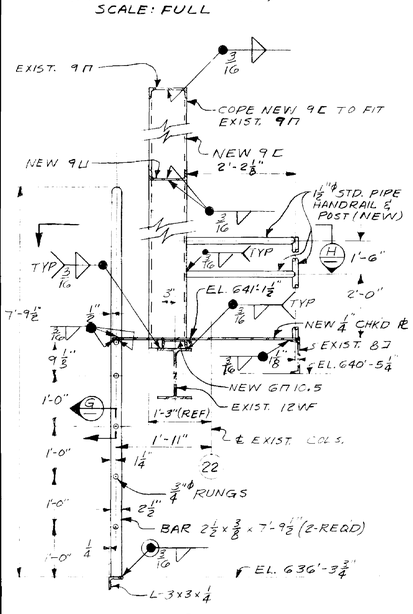

SECTION E/3 AS SHOWN
SCALE: ¾" = 1'-0"

SECTION F/3 OPPOSITE HAND

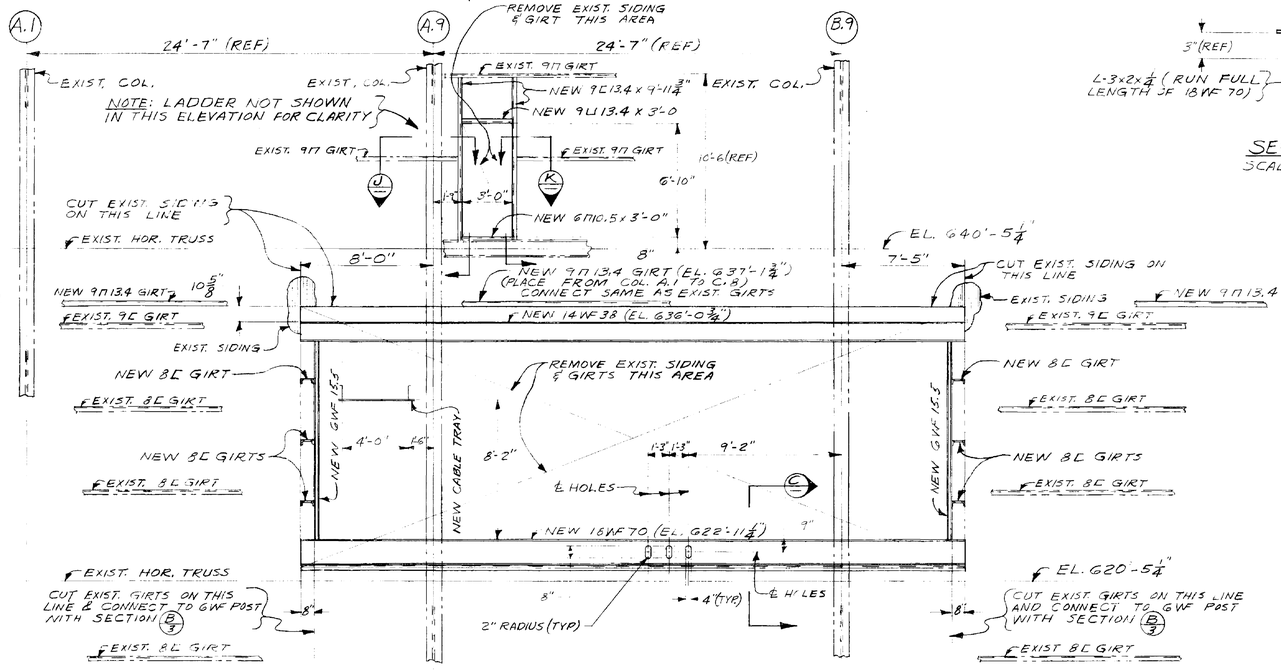

PARTIAL ELEVATION LOAD TEST ANNEX BLDG.
SCALE: ¼" = 1'-0"

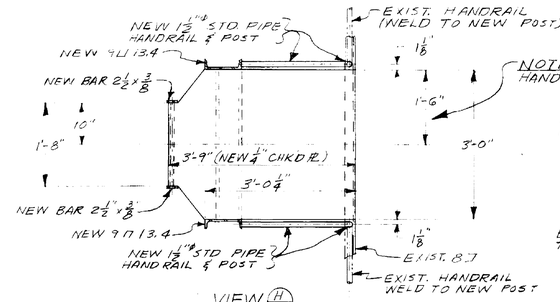

VIEW H
SCALE: ¾" = 1'-0"

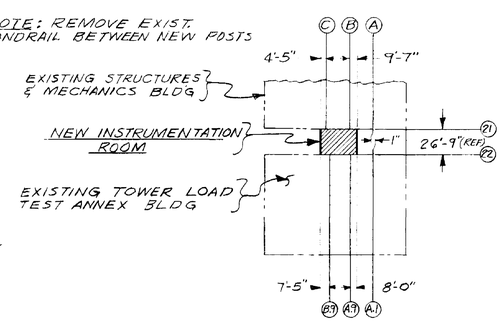

KEY PLAN
SCALE: 1" = 75'-0"

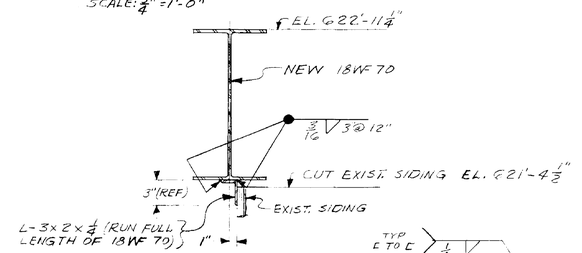

SECTION A
SCALE: 1½" = 1'-0"

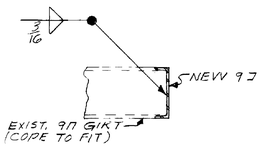

SECTION J AS SHOWN
SCALE: 1" = 1'-0"

SECTION K OPPOSITE HAND

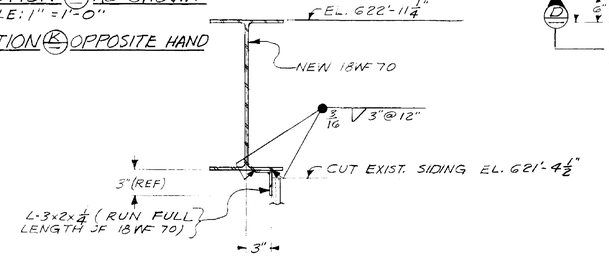

SECTION C
SCALE: 1½" = 1'-0"

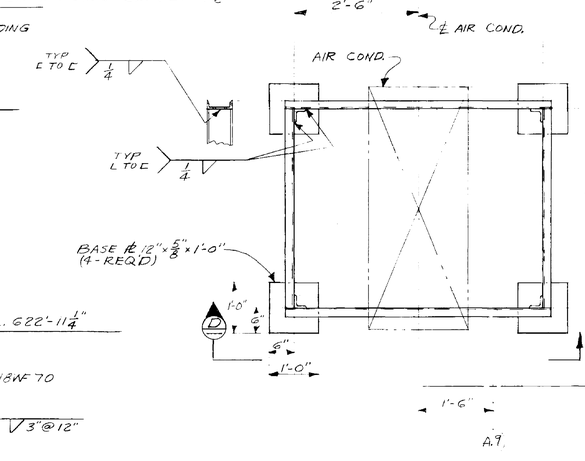

SUPPORT FRAME FOR AIR COND.
SCALE: ¾" = 1'-0"

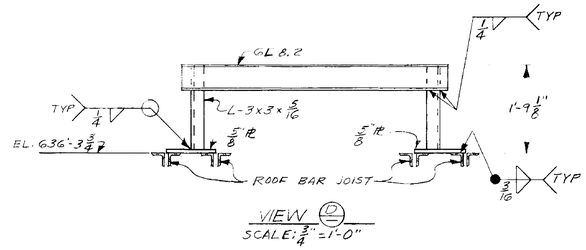

VIEW D
SCALE: ¾" = 1'-0"

REV.	BY	DATE		C.I. NO.	APPROVED

NATIONAL AERONAUTICS AND SPACE ADMINISTRATION — M S F C, HUNTSVILLE, ALABAMA

INSTRUMENTATION RM. FOR LOAD TEST ANNEX BLDG 4619

ELEVATIONS AND DETAILS

NASA AE CONT. NO.

FILE NO. MSFC 9619

SUBMITTED: CHIEF [illegible] BRANCH; A.E. DATE: MARCH 19, 1965	APPROVAL RECOMMENDED: [illegible] LAB. DATE: MAR 24-65	APPROVED: [illegible] CHIEF, DESIGN BRANCH; NASA DATE: 3-24-65
DESIGNED: THW; DRAWN: JTC; CHECKED: THW; SCALE: AS NOTED	APPROVAL RECOMMENDED: CHIEF, STRUCT. SECTION; DESIGN DATE: 3-24-65; SPEC. NO. 568	DRWG. NO. F&D-H-4619-S4

MAR 24 1965

S-4

MSFC MASTER BID DISK 11-18-2013

NOTICE. — WHEN GOVERNMENT DRAWINGS, SPECIFICATIONS, OR OTHER DATA ARE USED FOR ANY PURPOSE OTHER THAN IN CONNECTION WITH A DEFINITELY RELATED GOVERNMENT PROCUREMENT OPERATION, THE UNITED STATES GOVERNMENT THEREBY INCURS NO RESPONSIBILITY NOR ANY OBLIGATION WHATSOEVER; AND THE FACT THAT THE GOVERNMENT MAY HAVE FORMULATED, FURNISHED, OR IN ANY WAY SUPPLIED THE SAID DRAWINGS, SPECIFICATIONS, OR OTHER DATA IS NOT TO BE REGARDED BY IMPLICATION OR OTHERWISE AS IN ANY MANNER LICENSING THE HOLDER OR ANY OTHER PERSON OR CORPORATION, OR CONVEYING ANY RIGHTS OR PERMISSION TO MANUFACTURE, USE, OR SELL ANY PATENTED INVENTION THAT MAY IN ANY WAY BE RELATED THERETO.

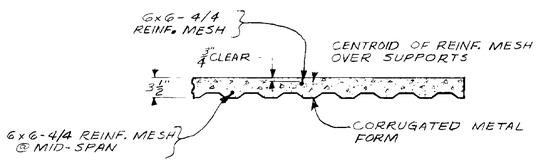

SECTION (B)
(TYP. CROSS-SECTION THRU CONCRETE)
SCALE: 1" = 1'-0"

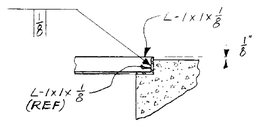

SECTION (K)
SCALE: 3" = 1'-0"

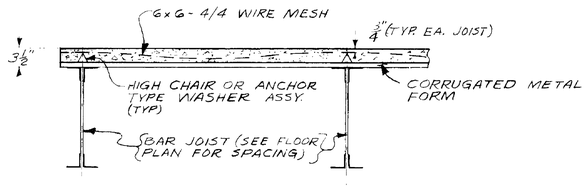

SECTION (A)
TYP. CONCRETE SECTION
SCALE: 1" = 1'-0"

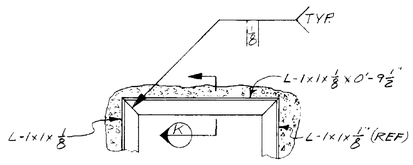

VIEW (J)
TYP. 8 PLACES
SCALE: 3" = 1'-0"

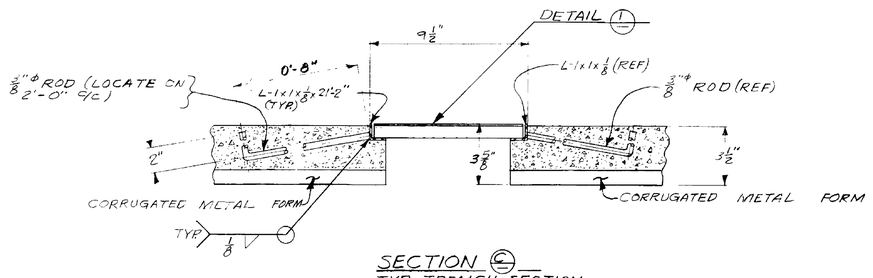

SECTION (C)
TYP. TRENCH SECTION
SCALE: 3" = 1'-0"

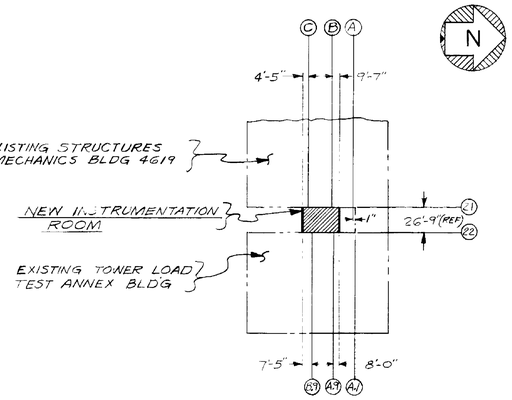

KEY PLAN
SCALE: 1" = 75'-0"

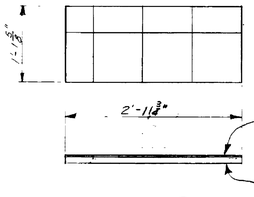

DETAIL (3)
SCALE: 1" = 1'-0"

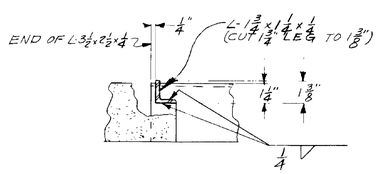

SECTION (E)
SCALE: 3" = 1'-0"

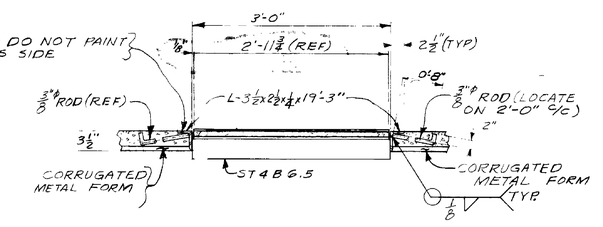

SECTION (E)
TYP. 8 PLACES
SCALE: 1" = 1'-0"

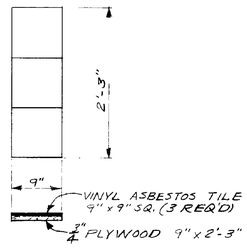

DETAIL (1)
NO. REQ'D - 36
SCALE: 1" = 1'-0"

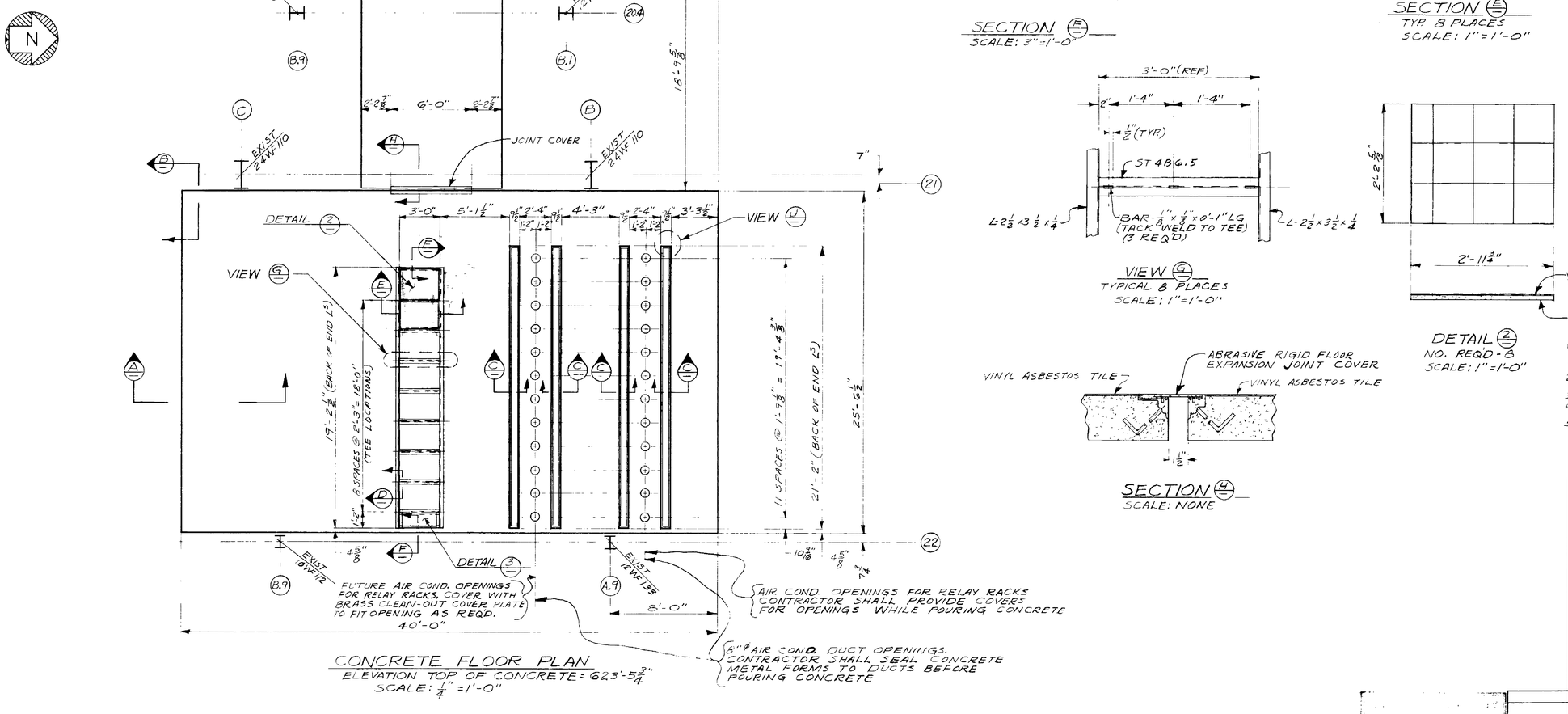

CONCRETE FLOOR PLAN
ELEVATION TOP OF CONCRETE = 623'-5 3/4"
SCALE: 1/4" = 1'-0"

VIEW (G)
TYPICAL 8 PLACES
SCALE: 1" = 1'-0"

DETAIL (2)
NO. REQ'D - 8
SCALE: 1" = 1'-0"

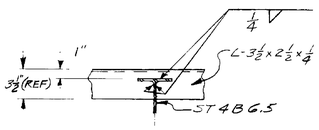

SECTION (D)
TYP. TEE TO L CONN.
SCALE: 1 1/2" = 1'-0"

SECTION (H)
SCALE: NONE

GENERAL NOTES: (CONCRETE)

1. ALL CONCRETE CONSTRUCTION SHALL CONFORM TO THE LATEST EDITION OF THE A.C.I. BUILDING CODE.
2. CONCRETE SHALL BE LIGHTWEIGHT WHICH DEVELOPS A MIN. COMPRESSIVE STRENGTH OF 3000 PSI. AT 28 DAYS.
3. REINFORCEMENT SHALL BE 6x6 - 4/4 WELDED WIRE FABRIC.
4. WELDED WIRE FABRIC REINFORCING SHALL BE LAPPED 6" AT SIDES AND ENDS.
5. ALL REINFORCING STEEL AND INSERTS SHALL BE SECURED IN POSITION BEFORE PLACING CONCRETE. SEE ELECTRICAL AND MECHANICAL DRAWINGS FOR DUCTS, OPENINGS, ETC. NOT OTHERWISE DETAILED.

REV.	BY	DATE		C.I. NO.	APPROVED
1	CPW	5-11-65	Changed Trench cover width	1504-1	

NATIONAL AERONAUTICS AND SPACE ADMINISTRATION — M S F C — HUNTSVILLE, ALABAMA

INSTRUMENTATION RM. FOR LOAD TEST ANNEX BLDG 4619

CONCRETE FLOOR PLAN & DETAILS

NASA AE CONT. NO.

FILE NO. M S F C 9620

SUBMITTED: CHIEF, AE. DATE: MARCH 19, 1965

APPROVAL RECOMMENDED: LAB. DATE: March 24, 65

APPROVED: CHIEF, DESIGN BRANCH. NASA DATE: 3-24-65

DESIGNED EHW
DRAWN JTC
CHECKED WAH
SCALE: AS NOTED

APPROVAL RECOMMENDED: CHIEF, STRUCT. SECTION
DESIGN DATE: 3-24-65
SPEC. NO. 568

DRWG. NO. F&D-H-4619-S5

MAR 24 1965

S-5

MSFC MASTER BID DISK 11-18-2013

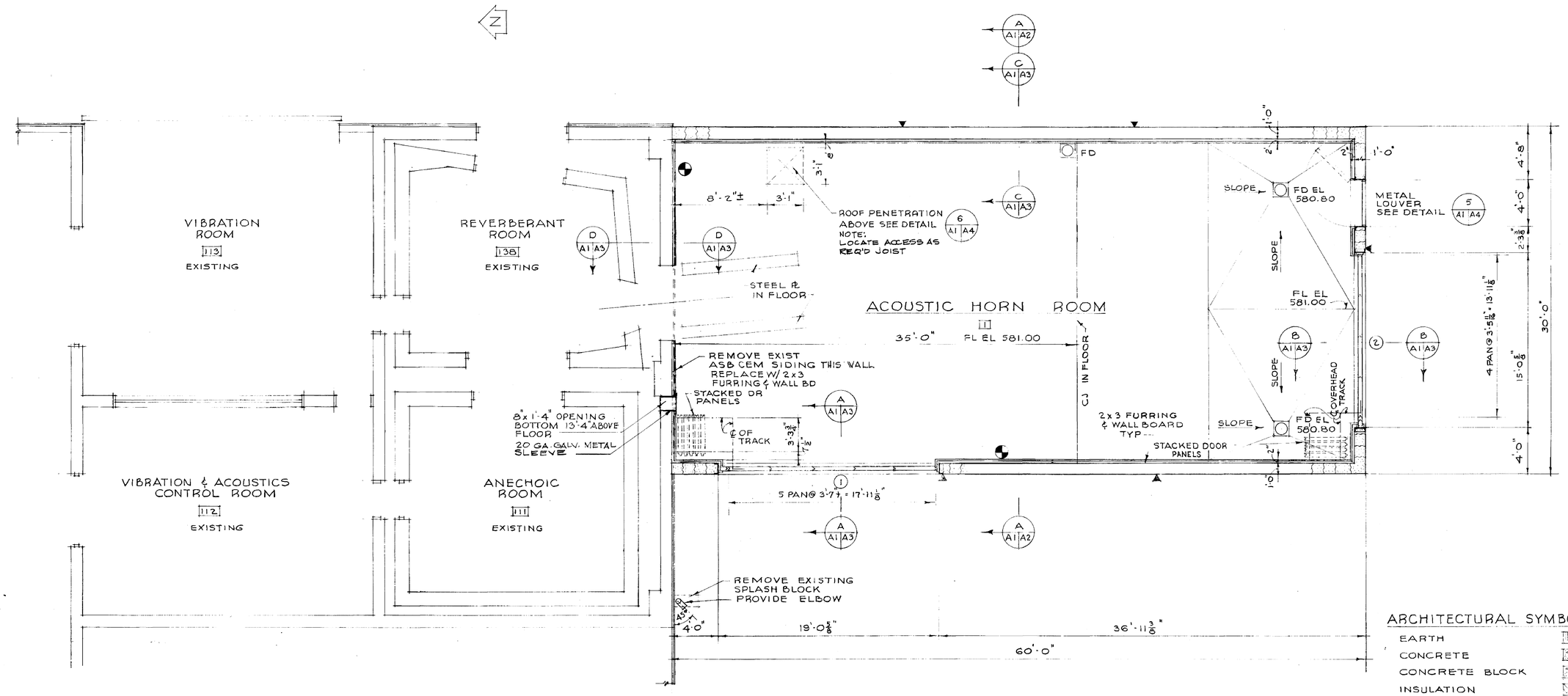

FLOOR PLAN

SCALE: 1/4" = 1'-0"

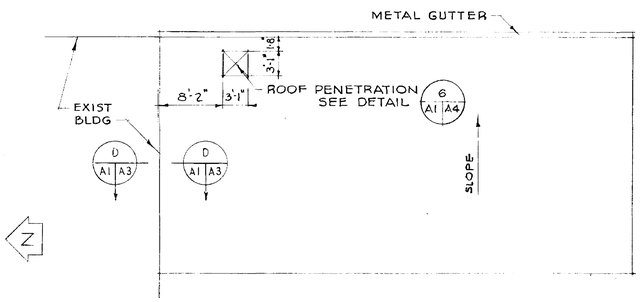

ROOF PLAN

SCALE: 1/8" = 1'-0"

ROOM FINISH SCHEDULE

AREA		FLOOR		BASE		WALLS		CEILING	DOOR		REMARKS
NO	NAME	MATL	FIN	MATL	COLOR	MATL	COLOR	MATL	COLOR	MATL	COLOR	
1	ACOUSTIC HORN ROOM	CONC	HARD	WOOD	26440	WALL BD.	* PRE-FIN	A.T.	* PRE-FIN	METAL	26440	BATTENSTRIPS SHALL MATCH WALL BOARD

FIN. SCHEDULE NOTES
1. PAINT COLOR NUMBERS ARE SELECTED FROM FED STDS. NO. 595.
2. LIGHT FIXTURES SHALL A BAKED ENAMEL FINISH- WHITE.
3. ALL EXPOSED METAL SHALL BE PAINTED TO MATCH ADJ. SURFACES UNLESS OTHERWISE NOTED.
4.* WALL BOARD AND ACOUSTICAL CEILING PANELS SHALL BE PRE-FINISHED-COLOR MFGRS. STD. WHITE.

ARCHITECTURAL SYMBOLS & LEGEND

EARTH
CONCRETE
CONCRETE BLOCK
INSULATION
WOOD
METAL
WALL BOARD
FORM BOARD
INSULATION
CONTROL JOINT
FIRE EXTINGUISHER (10" CO_2)

NOTES

1. FOR TYPICAL WALL PLAN SEE DRAWING A4
2. FOR DOOR DETAILS SEE DRAWING A5

NATIONAL AERONAUTICS AND SPACE ADMINISTRATION — M S F C — HUNTSVILLE, ALABAMA

SANDERS & THOMAS INC. PITTSTOWN PA. WASH. D.C.

EXTENSION OF LOAD TES ANNEX (BUILDING NO. 4619)

ACOUSTIC HORN ROOM
FLOOR & ROOF PLANS

The telecommunications facility design and locations and/or existing structures reflected herein are satisfactory to this organization.
Signature / Office Symbol / Date

APPROVED FOR SAFETY
SAFETY OFFICE — DATE 11-20-65

NASA AE CONT. NO. NAS 8-12014

SUBMITTED W.A. Sanders P.E. / SECT. CHIEF / DATE 12 NOV 1965	APPROVAL RECOMMENDED R.S. Harnett / LAB CHIEF / DATE 11/29/65	APPROVED S.D. Ramsey Jr. / CHIEF DESIGN BRANCH / NASA DATE 11/29/65
DESIGNED WRN / DRAWN WRN / CHECKED MLM / SCALE AS NOTED	APPROVAL RECOMMENDED / CHIEF ARCHITECTURAL SECTION / DESIGN DATE 11/29/65 / SPEC. NO. F&D 640	FILE NO. M S F C 9821 / DRWG. NO. F&D-M-4619-A1

A1

4619

MSFC MASTER BID DISK 11-18-2013

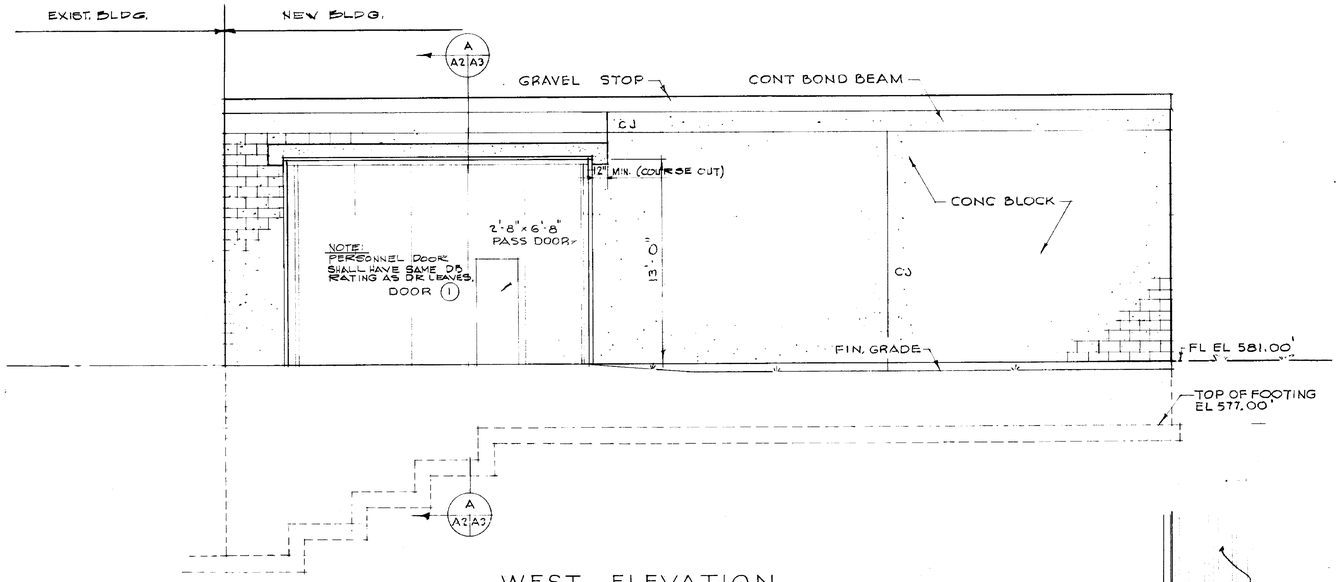

WEST ELEVATION

SCALE: $\frac{1}{4}$" = 1'-0"

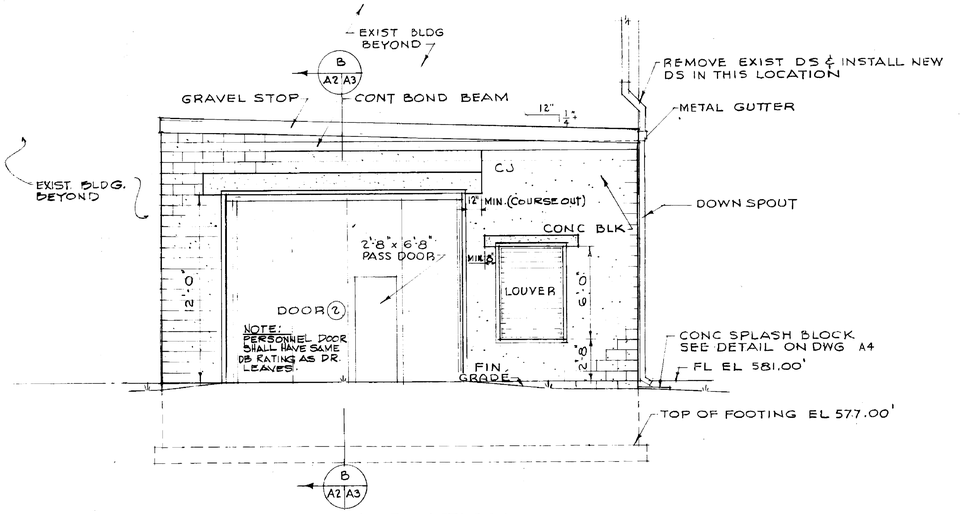

SOUTH ELEVATION

SCALE: $\frac{1}{4}$" = 1'-0"

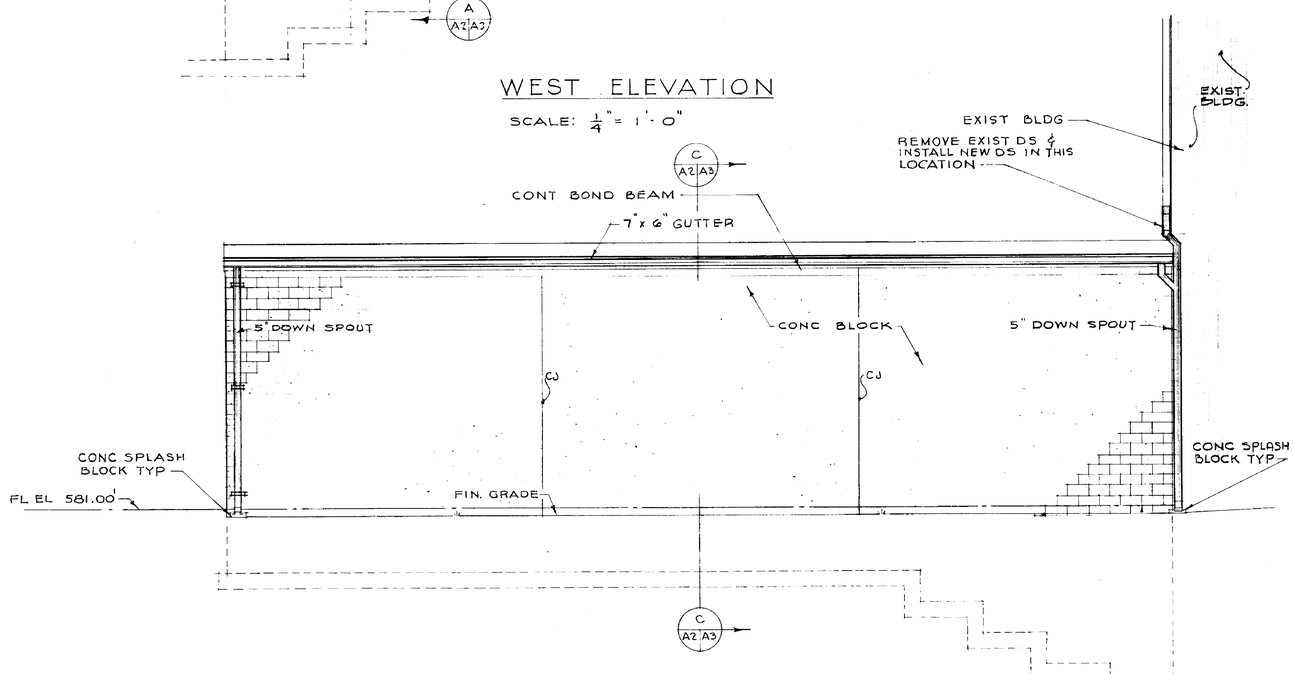

EAST ELEVATION

SCALE $\frac{1}{4}$" = 1'-0"

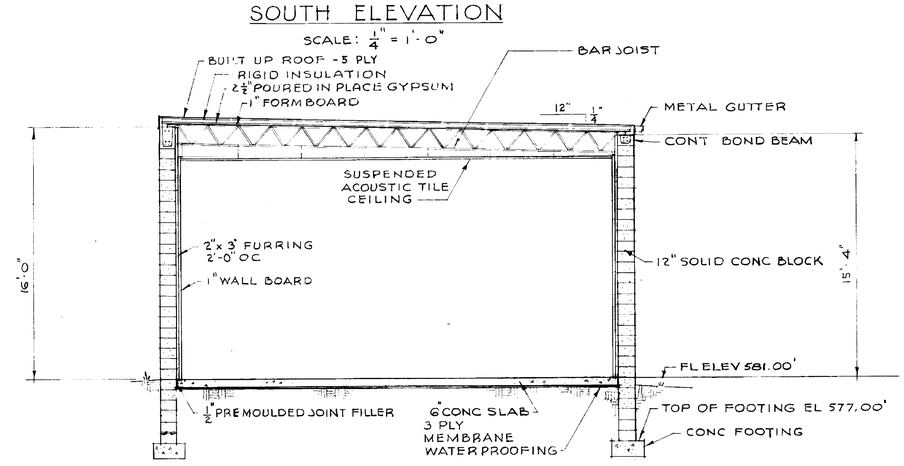

SECTION

A
A1 A2

SCALE: $\frac{1}{4}$" = 1'-0"

NOTE: [illegible]

NO.	BY	DATE	CT NO.	APPROVED

NATIONAL AERONAUTICS AND SPACE ADMINISTRATION — M S F C — HUNTSVILLE, ALABAMA

SANDERS & THOMAS INC. POTTSTOWN PA - WASH., D.C.

EXTENSION OF LOAD TEST ANNEX (BUILDING NO. 4619)

ACOUSTIC HORN ROOM
ELEVATIONS & BUILDING SECTION

The Telecommunications facility design and locations and/or supporting structures reflected herein are satisfactory to this organization.

Signature / Office Symbol / Date

APPROVED FOR SAFETY — SAFETY OFFICE — DATE 11-29-65

SIZE: A2

NASA AE CONT. NO. NAS 8-12014

SUBMITTED SECT. CHIEF: W.R. Sanders P.E.	APPROVAL RECOMMENDED: R.J. Harrell	FILE NO. M S F C 9822	
AE DATE 12 NOV 1965	LAB DATE 11/29/65	APPROVED: B.G. Ramsey Jr. CHIEF DESIGN BRANCH	
DESIGNED WRN	APPROVAL RECOMMENDED: [illegible] CHIEF ARCHITECTURAL SECTION	NASA DATE 11/29/65	
DRAWN WRN		DRWG. NO. F&D-M-4619-A2	
CHECKED M.M.	DESIGN DATE 11/29/65		
SCALE: AS NOTED	SPEC. NO. F & D 640		

MSFC MASTER BID DISK 11-18-2013

NOTICE - THIS DRAWING, SPECIFICATION, OR OTHER DOCUMENT, AND THE INFORMATION THEREIN, IS THE PROPERTY OF THE UNITED STATES GOVERNMENT AS REPRESENTED BY THE NATIONAL AERONAUTICS AND SPACE ADMINISTRATION. IT IS UNPUBLISHED AND IS LOANED FOR LIMITED PURPOSES. REPRODUCTION, PUBLICATION, OR USE OF THIS DRAWING, SPECIFICATION, OR OTHER DOCUMENT, OR THE INFORMATION THEREIN, IN ANY MANNER FOR ANY PURPOSE WHATSOEVER, EXCEPT AS AUTHORIZED IN WRITING BY NASA, IS PROHIBITED. RECIPIENT, BY ACCEPTANCE OF THIS DRAWING, SPECIFICATION, OR OTHER DOCUMENT, AGREES NOT TO OBTAIN ANY RIGHTS BY UNAUTHORIZED USE OF THIS DRAWING, SPECIFICATION, OR OTHER DOCUMENT, OR THE INFORMATION THEREIN, AND NOT TO ASSERT ANY RIGHTS SO OBTAINED AGAINST THE UNITED STATES GOVERNMENT, ITS CONTRACTORS, OR ANY OTHER PERSON OR ORGANIZATION. ANY REPRODUCTION OF THIS DRAWING OR PORTIONS THEREOF MUST INCLUDE THIS NOTICE.

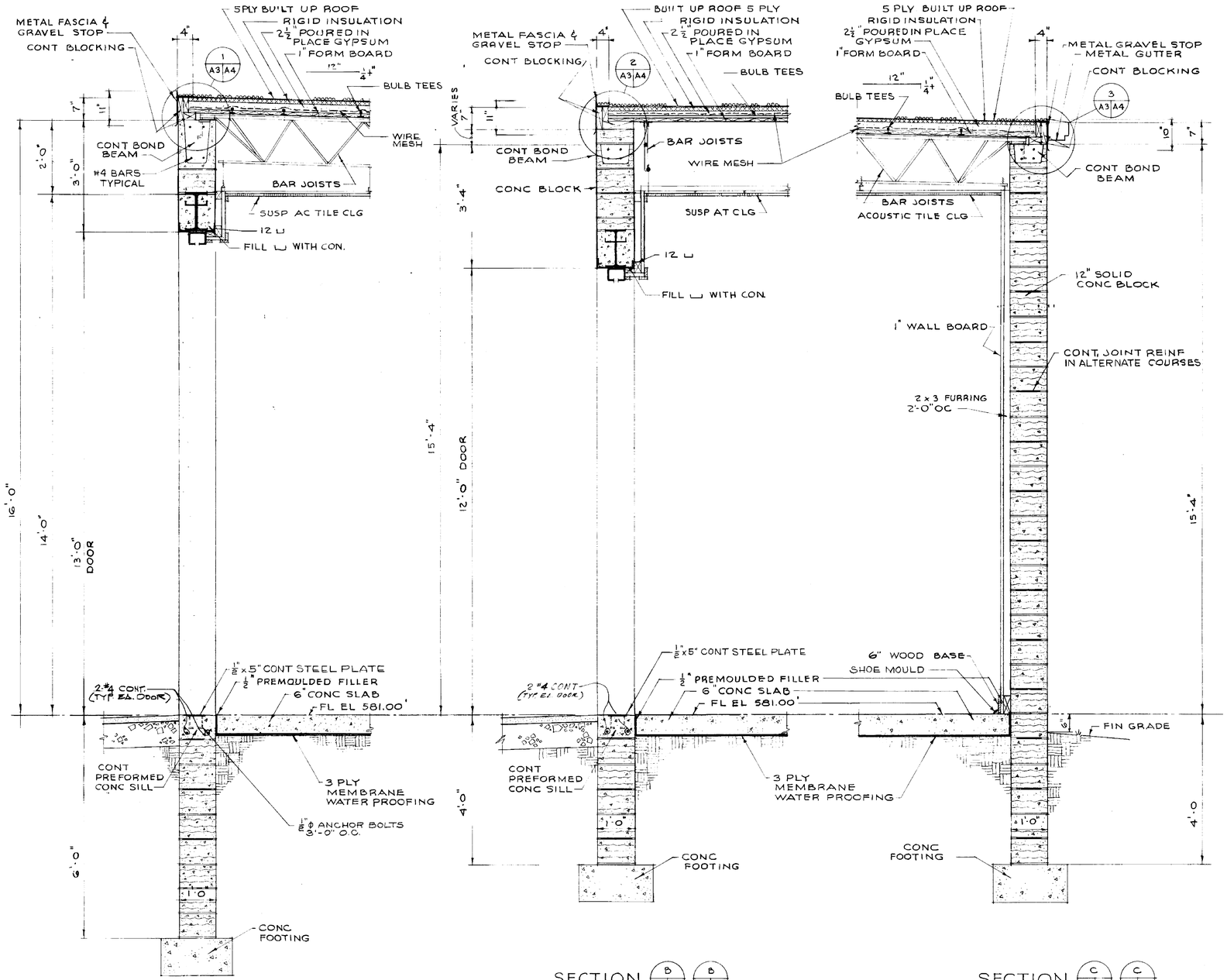

SECTION A (A1 A3 / A2 A3)
SCALE: ¾" = 1'-0"

SECTION B (A1 A3 / A2 A3)
SCALE: ¾" = 1'-0"

SECTION C (A1 A3 / A2 A3)
SCALE: ¾" = 1'-0"

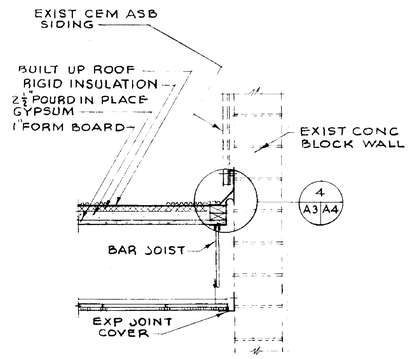

SECTION D (A1 A3)
SCALE: ¾" = 1'-0"

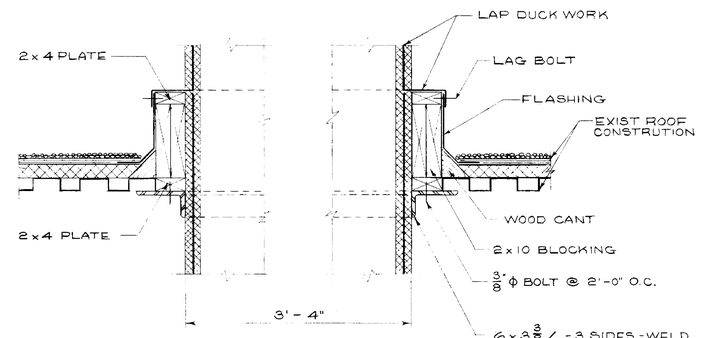

DETAIL 1 (M2 A3)
SCALE: 1½" = 1'-0"

The Telecommunications facility design and locations and/or supporting structures reflected herein are satisfactory to this organization.

Harry W. Fitts — MS-CO — Nov 29,65
Signature — Office Symbol — Date

APPROVED FOR SAFETY — 11-29-65 — DATE
SAFETY OFFICE

A3

NATIONAL AERONAUTICS AND SPACE ADMINISTRATION — M S F C — HUNTSVILLE ALABAMA

SANDERS & THOMAS INC. POTTSTOWN PA. WASH. D.C.

EXTENSION OF LOAD TEST ANNEX (BUILDING NO. 4619)

ACOUSTIC HORN ROOM
SECTIONS & DETAILS

NASA AE CONT. NO. NAS 8-12014		FILE NO. M S F C 9823
W.U. W. Saunders P.E. DATE 12 NOV 1965	APPROVAL RECOMMENDED R.S. Harrett LAB. CHIEF DATE 11/29/65	APPROVED B. D. Ramsey, Jr. CHIEF DIVISION BRANCH NASA DATE 11/29/65
DESIGNED WRN DRAWN WRN CHECKED MLM	APPROVED ARCHITECTURAL DESIGN DATE 11/29/65	DRWG. NO. F&D-M-4619-A3
SCALE AS NOTED	SPEC. NO. F & D - 640	

4619

MSFC MASTER BID DISK 11-18-2013

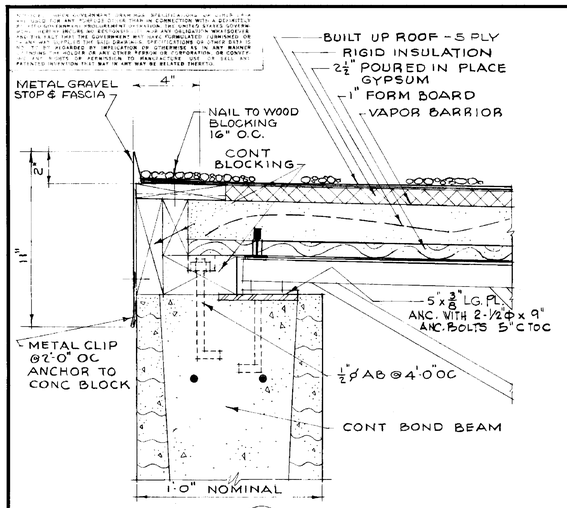

DETAIL 1 (A3|A4)

SCALE: 3" = 1'-0"

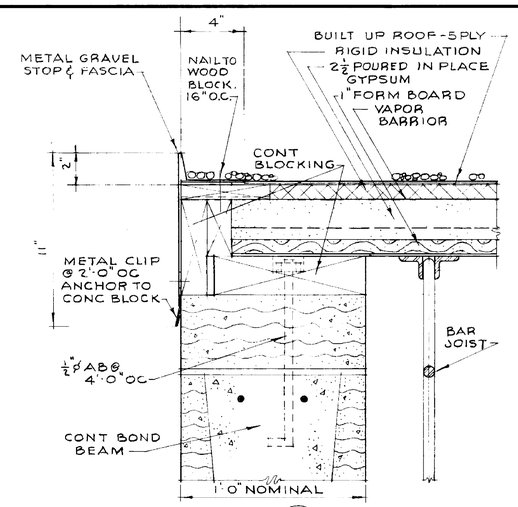

DETAIL 2 (A3|A4)

SCALE: 3" = 1'-0"

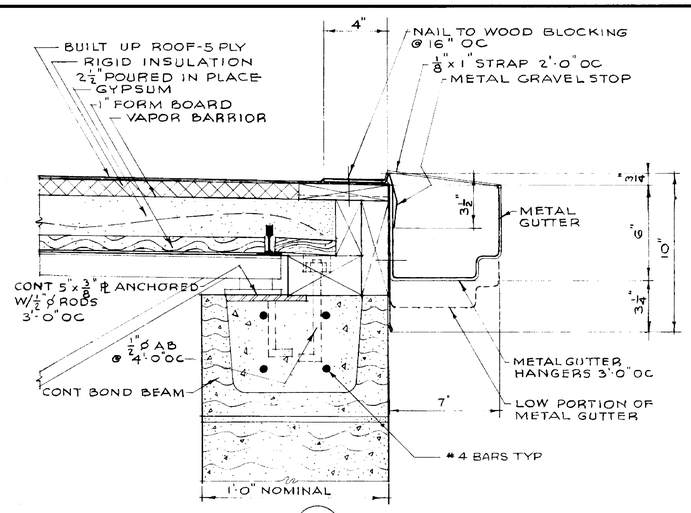

DETAIL 3 (A3|A4)

SCALE: 3" = 1'-0"

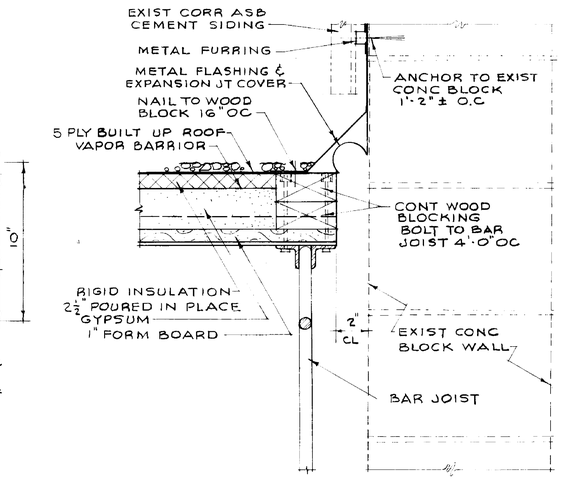

DETAIL 4 (A3|A4)

SCALE: 3" = 1'-0"

LONG. SECTION TRANS. SECTION

TYPICAL SECTION THRU ROOF DECK

N.T.S.

PRECAST CONCRETE SPLASHBLOCK

SCALE: 1½" = 1'-0"

TYPICAL BOND BEAM BLOCK DETAILS

SCALE: 3/4" = 1'-0"

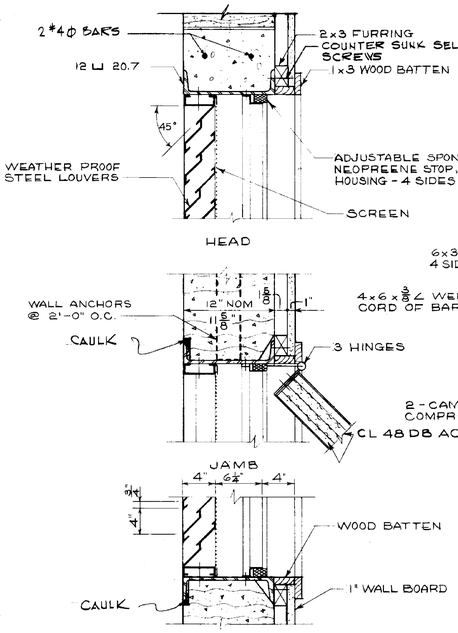

LOUVER DETAIL (5 A1|A4)

SCALE: 1½" = 1'-0"

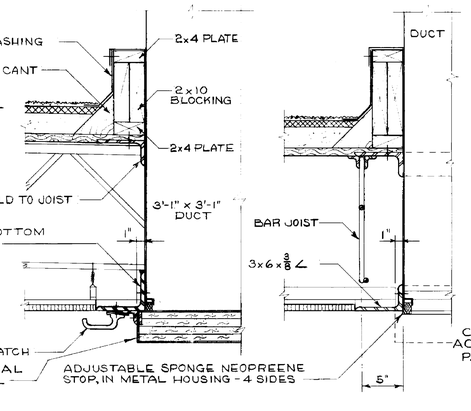

SECTION A (A4|A4)

SECTION B (A4|A4)

SCALE: 1½" = 1'-0"

SECTION C (A4|A4)

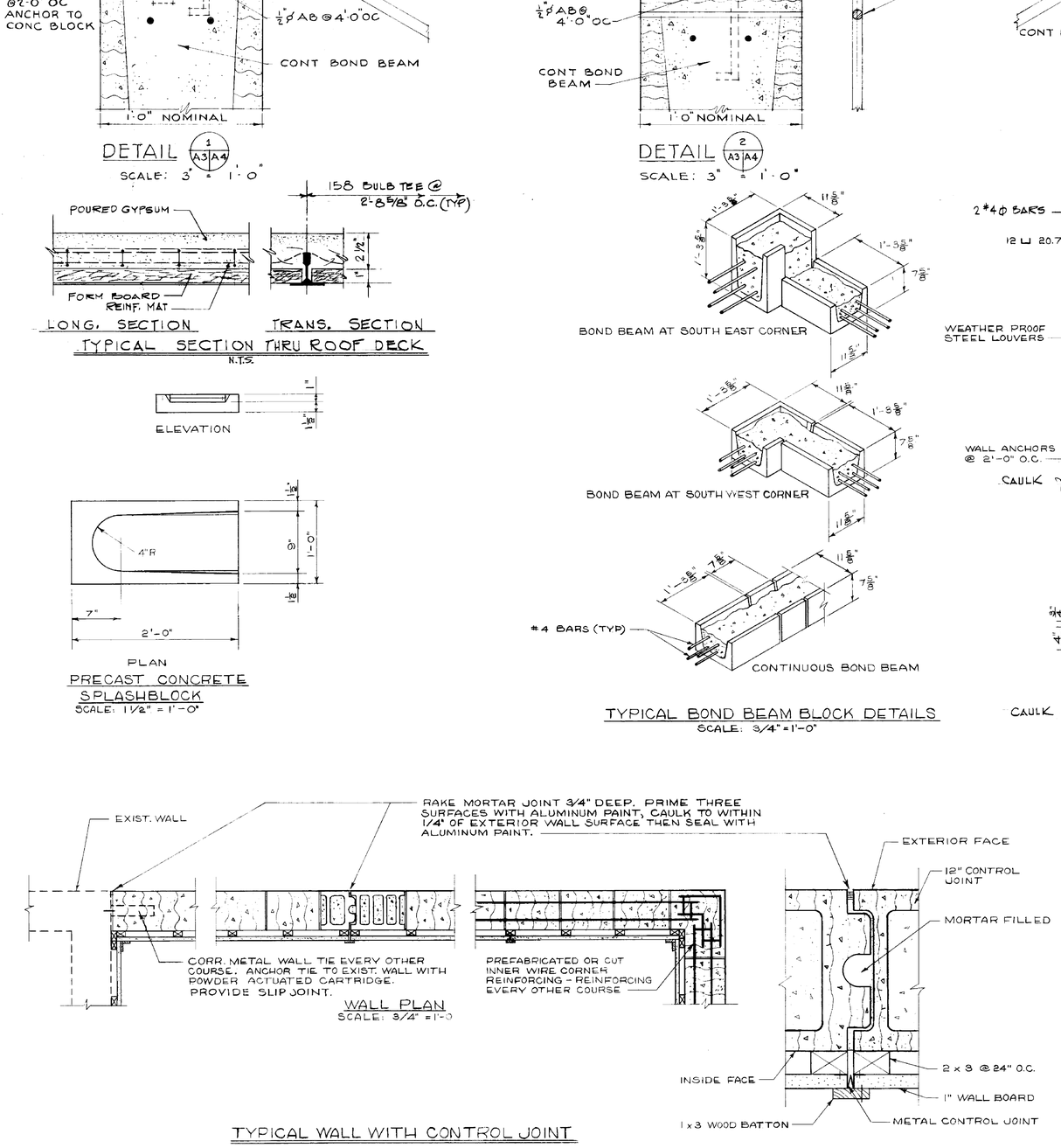

WALL PLAN

SCALE: 3/4" = 1'-0"

TYPICAL WALL WITH CONTROL JOINT

CONTROL JOINT DETAIL

SCALE: 3" = 1'-0"

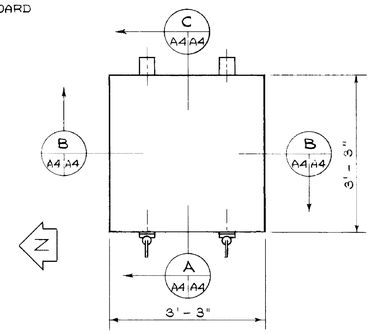

REFLECTED CEILING PLAN

SCALE: 3/4" = 1'-0"

ROOF PENETRATION DETAIL (6 A1|A4)

The telecommunications facility design and locations and/or surrounding structures reflected herein are satisfactory to this organization.

Signature: Office Symbol: Date:

APPROVED FOR SAFETY — SAFETY OFFICE — DATE

A4

NATIONAL AERONAUTICS AND SPACE ADMINISTRATION — M S F C — HUNTSVILLE, ALABAMA

SANDERS & THOMAS INC. POTTSTOWN PA. WASH. D.C. MONT. ALA.

EXTENSION OF LOAD TEST ANNEX (BUILDING NO. 4619)

ACOUSTIC HORN ROOM

SECTIONS & DETAILS

NASA AE CONT. NO. NAS 8-12014

FILE NO. M S F C 9824

SUBMITTED: W. Saunders 12 NOV 1965

APPROVAL RECOMMENDED: R.L. Garrett, LAB DATE 11/29/65

APPROVED: R. O. Ramsey Jr., CHIEF DESIGN BRANCH, NASA DATE 11/29/65

DESIGNED J W H; DRAWN J W H; CHECKED M M

APPROVAL RECOMMENDED: CHIEF ARCHITECTURAL SECTION, DESIGN DATE 11/29/65

SCALE AS NOTED

SPEC NO. F & D 840

DRWG. NO. F&D-M-4619-A4

4619

MSFC MASTER BID DISK 11-18-2013

NOTICE: IN GOVERNMENT CONTRACTS OR OTHER USE IN CONNECTION WITH A DEFINITELY RELATED GOVERNMENT PROCUREMENT OPERATION, THE UNITED STATES GOVERNMENT MAY FURNISH OR IN ANY WAY SUPPLY SUCH DRAWINGS FOR ANY PURPOSE WHATSOEVER. THAT THE GOVERNMENT MAY HAVE FORMULATED, FURNISHED, OR IN ANY WAY SUPPLIED THE SAID DRAWINGS IS NOT TO BE REGARDED BY IMPLICATION OR OTHERWISE AS IN ANY MANNER LICENSING THE HOLDER OR ANY OTHER PERSON OR CORPORATION, OR CONVEYING ANY RIGHTS OR PERMISSION TO MANUFACTURE, USE OR SELL ANY PATENTED INVENTION THAT MAY IN ANY WAY BE RELATED THERETO.

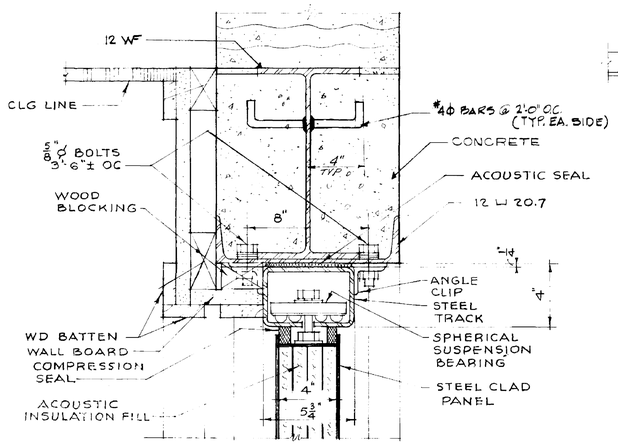

HEAD

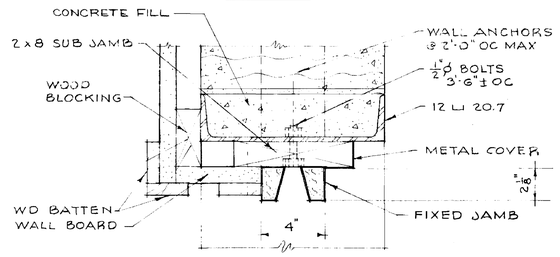

INACTIVE JAMB

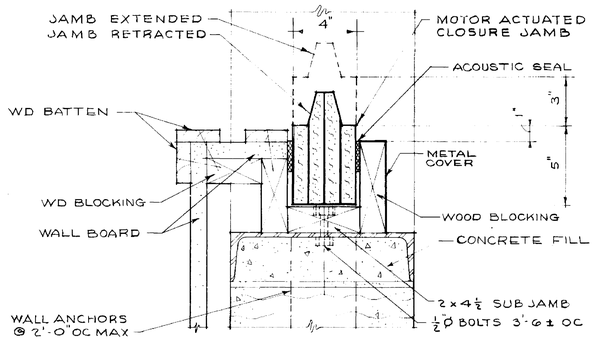

ACTIVE JAMB

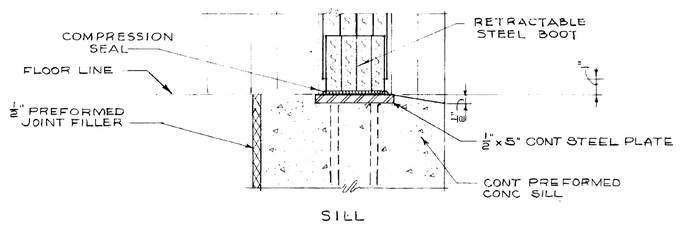

SILL

TYPICAL DOOR DETAILS
DOOR NOS 1 & 2
SCALE: 3" = 1'-0"

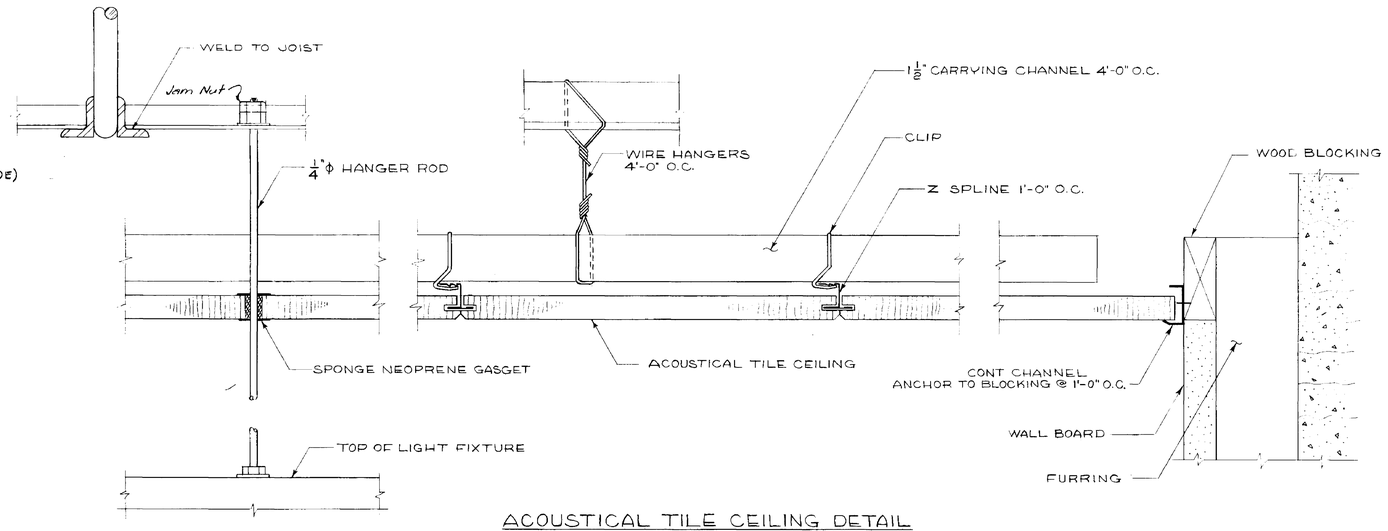

ACOUSTICAL TILE CEILING DETAIL
SCALE: 6" = 1'-0"

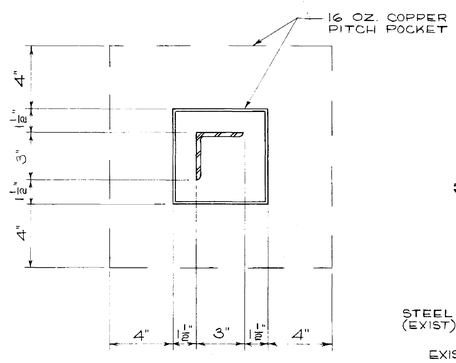

PLAN

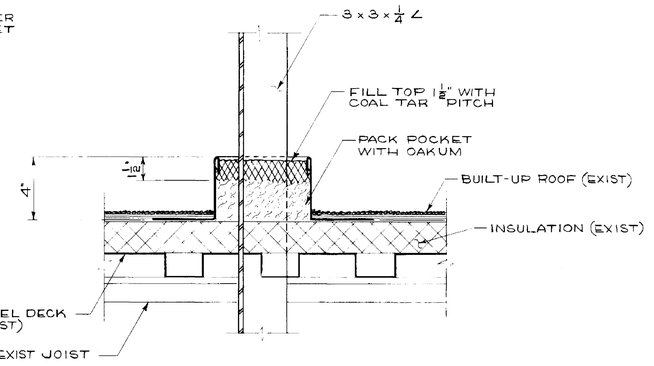

SECTION

TYPICAL PITCH POCKET DETAIL (SEE M2)
SCALE: 3" = 1'-0"

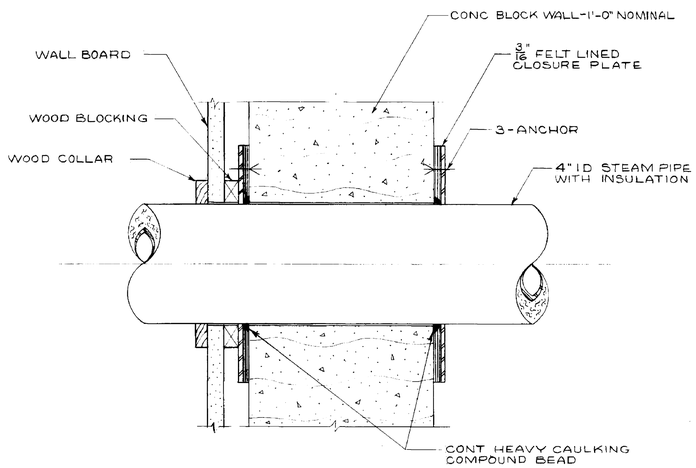

PIPE PENETRATION IN EXTERIOR WALL
SCALE: 3" = 1'-0"

The Telecommunications facility design and locations and/or supporting structures reflected herein are satisfactory to this organization.

Signature: Harry W. Tittle, Office Symbol: MS-CP, Date: Nov. 24 65

APPROVED FOR SAFETY
11-29-65
SAFETY OFFICE DATE

REVISIONS

A5

NATIONAL AERONAUTICS AND SPACE ADMINISTRATION
M S F C
HUNTSVILLE, ALABAMA

SANDERS & THOMAS INC. POTTSTOWN PA. - WASH., D.C. - MONT., ALA.

EXTENSION OF LOAD TEST ANNEX (BUILDING NO. 4619)

ACOUSTIC HORN ROOM
SECTIONS & DETAILS

NASA AE CONT. NO. NAS8-12014 | FILE NO. M S F C 9825

SUBMITTED: W.A. Sanders P.E. | APPROVAL RECOMMENDED: R.A. Harrett | APPROVED: R.D. Ramsey Jr.
VICE-PRES. AE DATE: 12 NOV 1965 | LAB DATE: 11/29/65 | CHIEF DESIGN BRANCH NASA DATE: 11/29/65

DESIGNED RN | DRAWN RN | CHECKED MLM | SCALE AS NOTED
APPROVAL RECOMMENDED: John Ramsey, CHIEF ARCHITECTURAL DESIGN
DESIGN DATE: 11/29/65
SPEC. NO. F&D: 640
DRWG. NO. F&D-M-4619-A5

4619

MSFC MASTER BID DISK 11-18-2013

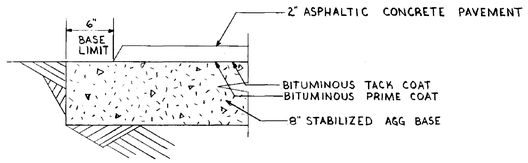

PAVEMENT DETAIL
NO SCALE

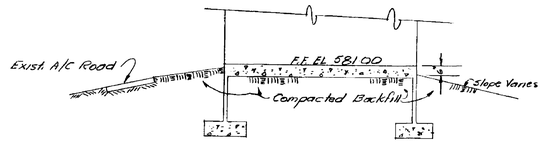

SECTION A-A
No Scale

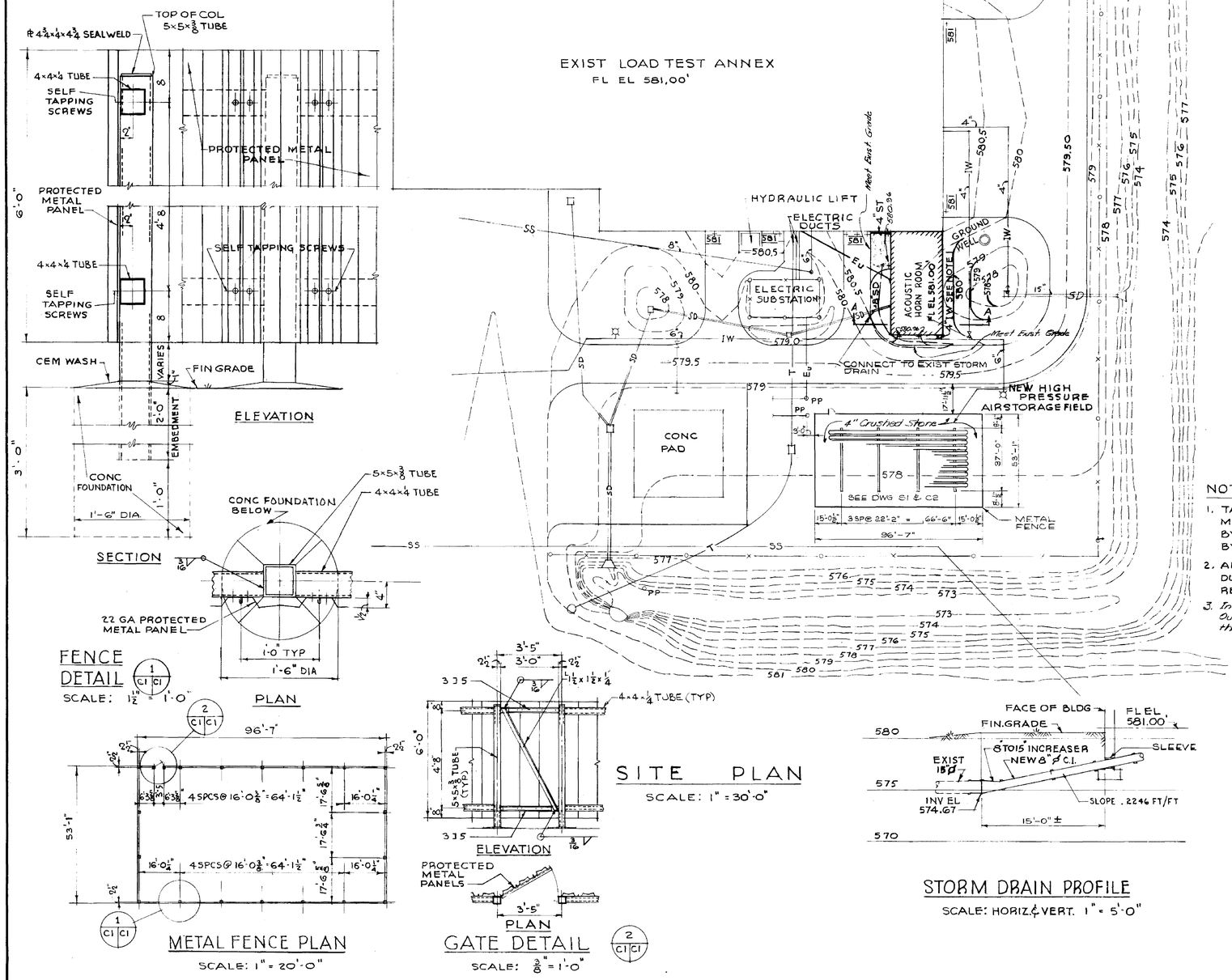

NOTES:

1. TAPPING SLEEVE VALVE & BOX MATERIALS SHALL BE FURNISHED BY THE CONTRACTOR TAP WILL BE BY THE GOVERNMENT.
2. ALL EXISTING PAVEMENT DISTURBED DURING CONSTRUCTION SHALL BE REPLACED.
3. Install 4" of Crushed Stone Inside the Area Outlined by the Fence, After Sterilizing the Soil. See Specifications.

LEGEND

EXISTING		NEW
FH	FENCE	
IW GATE VALVE	INDUSTRIAL WATER	IW GATE VALVE & BOX
SD	STORM DRAIN	SD
SS	SANITARY SEWER	
PP	STEAM	ST
	ELECTRICAL POLE	
	BUILDING	
	PAVEMENT	
580	CONTOUR	580
580 TO REMAIN	SPOT ELEVATIONS	580.00
SS(F)	SANITARY SEWER FORCE MAIN	
T	TELEPHONE DUCT	
EU	UNDERGROUND ELECTRICAL	EU

NATIONAL AERONAUTICS AND SPACE ADMINISTRATION — M S F C — HUNTSVILLE ALABAMA

SANDERS & THOMAS INC. POTTSTOWN PA. WASH. D.C. MONT., ALA.

EXTENSION OF LOAD TEST ANNEX (BUILDING NO. 4619)

ACOUSTIC HORN ROOM
SITE PLAN & DETAILS

The Telecommunications facility design and locations and/or supporting structures reflected herein are satisfactory to this organization.

Signature: Office Symbol: Date: 11-29-65

APPROVED FOR SAFETY — Safety Office — DATE 11-29-65

CI

NASA CONT. NO. NAS 8-12014		FILE NO. M S F C 9818
DESIGNED W. A. Snowden P.E. 12 NOV 1965	APPROVAL RECOMMENDED R. S. Garrett LAB. DATE 11/29/65	APPROVED R. D. Ramsey Jr. CHIEF DESIGN BRANCH NASA DATE 11/29/65
DRAWN W R N	APPROVAL RECOMMENDED CHIEF, CIVIL ENGR. DESIGN DATE 11/29/65	DRWG. NO. F&D-M-4619-CI
CHECKED W R N		
SCALE AS NOTED	SPEC. NO. F & D 640	

4619

MSFC MASTER BID DISK 11-18-2013

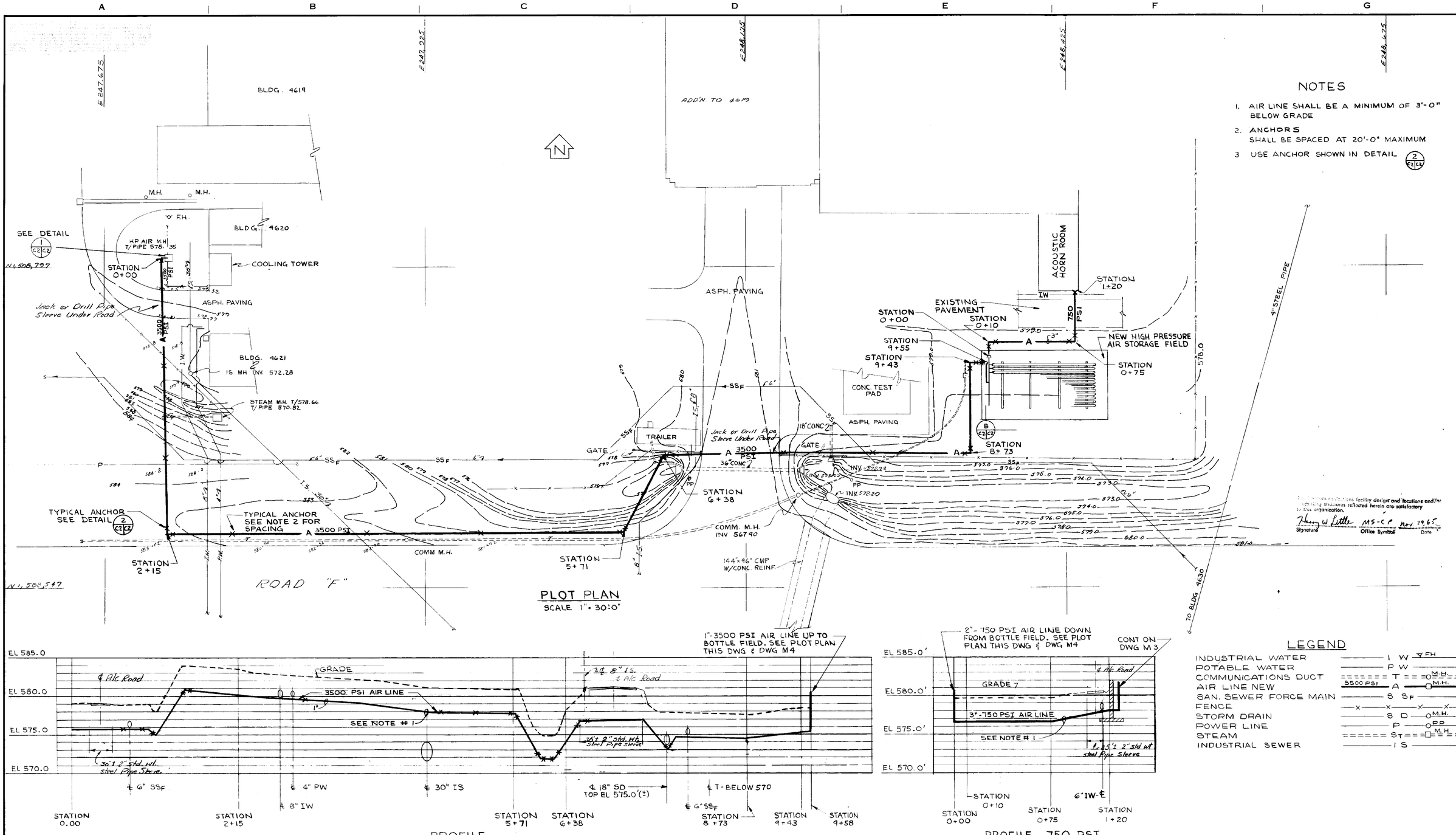

NOTES

1. AIR LINE SHALL BE A MINIMUM OF 3'-0" BELOW GRADE
2. ANCHORS SHALL BE SPACED AT 20'-0" MAXIMUM
3. USE ANCHOR SHOWN IN DETAIL 2 C2 C2

PROFILE
3500 PSI UNDERGROUND AIR LINE

SCALE HORIZONTAL 1" = 50'-0"
VERTICAL 1" = 5'-0"

PROFILE 750 PSI
UNDERGROUND AIR LINE

SCALE HORIZONTAL 1"=30'-0"
VERTICAL 1"= 5'-0"

LEGEND

INDUSTRIAL WATER	I W (FH)
POTABLE WATER	P W
COMMUNICATIONS DUCT	T (M.H.)
AIR LINE NEW	3500 PSI A (M.H.)
SAN. SEWER FORCE MAIN	S SF
FENCE	X X X X
STORM DRAIN	S D (M.H.)
POWER LINE	P (PP)
STEAM	ST (M.H.)
INDUSTRIAL SEWER	I S

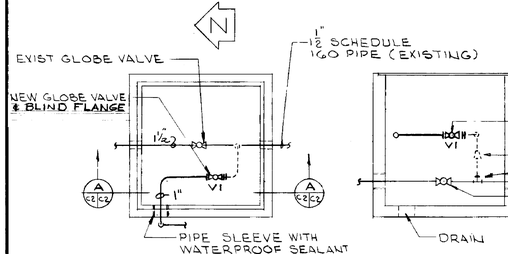

DETAIL 1 C2 C2
NO SCALE

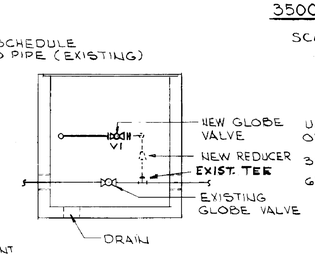

NOTE - CONNECTION FROM V1 TO EXIST. TEE BY NASA - CONTR. TO FURNISH MATERIAL.

SECTION A C2 C2
NO SCALE

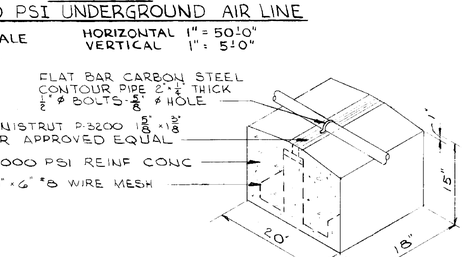

ANCHOR DETAIL 2 C2 C2
NO SCALE

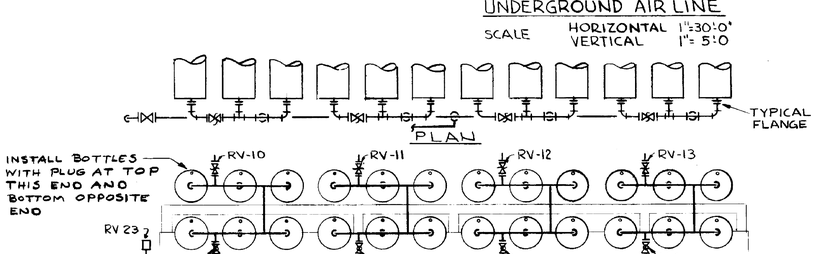

ELEVATION SECTION B C2 C2
NO SCALE

APPROVED FOR SAFETY 11-29-65 DATE

C2

I have reviewed this facility design and locations and/or specify structures reflected herein are satisfactory to this organization.

Johnny W Little MS-C P Nov 29 65
Signature Office Symbol Date

REV.	BY	DATE		C.I. NO.	APPROVED
2	JJP	9/6/66	ADDED FLEX	17137-4	JJP

NATIONAL AERONAUTICS AND SPACE ADMINISTRATION — **M S F C** HUNTSVILLE, ALABAMA

SANDERS & THOMAS INC. POTTSTOWN PA. WASH D.C. MONT. ALA.

EXTENSION OF LOAD TEST ANNEX (BUILDING NO. 4619)
ACOUSTIC HORN ROOM
HIGH PRESSURE PIPING

NASA AE CONT. NO. NAS 8-12014 — FILE NO. M S F C 9819

SUBMITTED: CHIEF AE:	DATE: 12 NOV 1965	APPROVAL RECOMMENDED: LAR:	DATE: 11/29/65
			APPROVED: CHIEF, DESIGN BRANCH NASA:	DATE: 11/29/65
DESIGNED W.G. DRAWN A.K. CHECKED R.S.		APPROVAL RECOMMENDED: CHIEF, CIVIL SECTION	DESIGN DATE: 11/29/65
SCALE: AS NOTED		SPEC. NO. F8D-640	DRWG. NO. F8D-M-4619-C2

MSFC-FORM 232 (REV. DEC., 1960)

4619

Dietzgen N. O. 127 "Drafrex"

MSFC MASTER BID DISK 11-18-2013

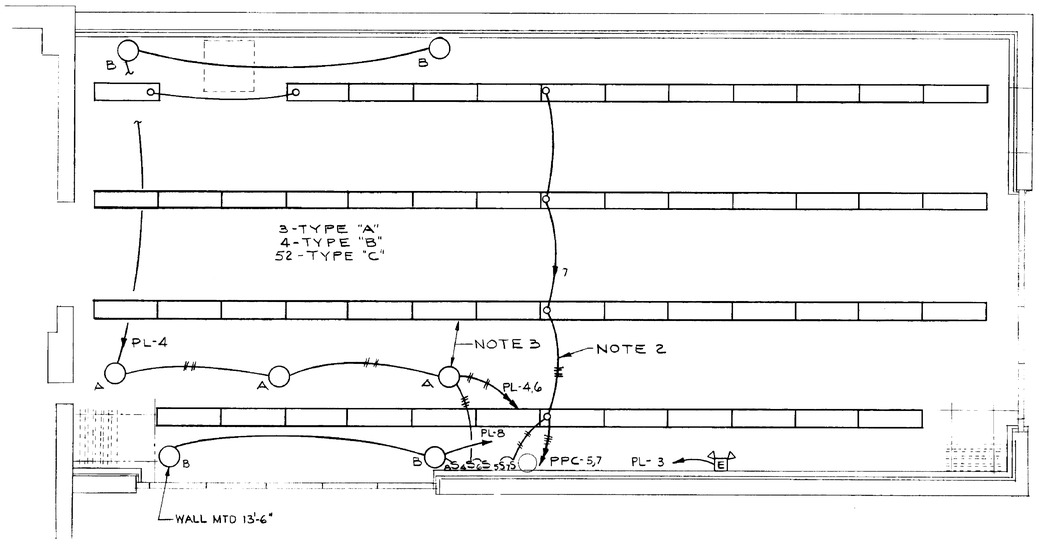

FLOOR PLAN
SCALE: 1/4"=1'-0"

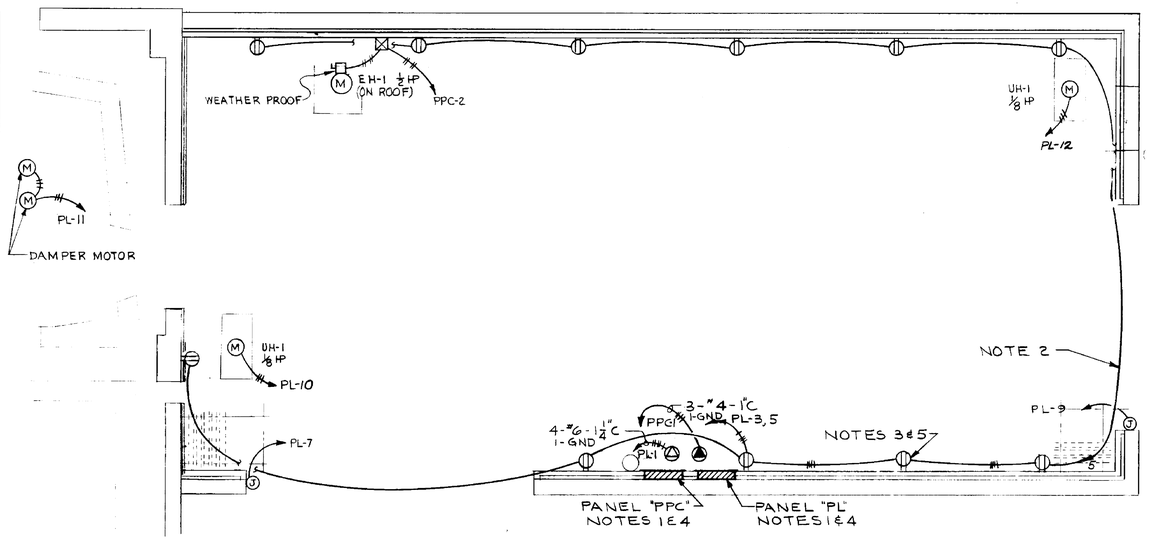

FLOOR PLAN
SCALE: 1/4"=1'-0"

POWER PANEL "PPC" CIRCUIT SCHEDULE
277/480V-3Ø-4W- 100 A MAINS (MIN. IC OF BKRS SHALL BE 10,000A)

CKT	FOR	VOLT	BREAKER POLE	BREAKER AMP	KVA LOAD øA	øB	øC	BREAKER POLE	BREAKER AMP	VOLT	FOR	CKT
1	RECP.	480	3	90	13.5	13.5	13.5	3	20	480	EH-1	2
3	SPARE	480	3	20				3		480	SPARE	4
5	LTG	277	1	↓	2.6			1	↓	277	SPARE	6
7	LTG	277	1	↓		2.6		1	↓	277	SPARE	8

POWER PANEL "PL" CIRCUIT SCHEDULE
120/208V-3Ø 4W- 100A MAINS (MIN. IC OF BKRS SHALL BE 5000A)

CKT	FOR	VOLT	BREAKER POLE	BREAKER AMP	KVA LOAD øA	øB	øC	BREAKER POLE	BREAKER AMP	VOLT	FOR	CKT
1	RECP.	208	3	60	5.8	5.8	5.8	3	—	208	SPACE	2
3	RECP.	120	1	20	2.4			1	20	120	LTG	4
5	RECP.		↓	↓		3.3		↓	↓	↓	LTG	6
7	DOOR SEAL		↓	↓			1.5	↓	↓	↓	LTG	8
9	DOOR SEAL		↓	↓	.4			↓	↓	↓	UH-1	10
11	DAMPER MOTOR		↓	↓		.6		↓	↓	↓	UH-1	12
13	SPARE		↓	↓				↓	↓	↓	SPARE	14
15	SPARE		↓	↓				↓	↓	↓	SPARE	16

LIGHTING FIXTURE SCHEDULE

TYPE	DESCRIPTION	WATTS / FIXT.	MTD HGT.
A	1L/750 WATT PENDANT MOUNTED INDUSTRIAL INCANDESCENT WITH VENILATED PROTECTOR UNIT AND SHOCK ABSORBING MOUNTING AND R-52 LAMP. MILLER CAT.NO. AE 3755 OR EQUAL	750	12'-6"
B	1L/750 WATT WALL MOUNTED INDUSTRIAL INCANDESCENT WITH VENTILATED ELLIPTICAL ANGLE UNIT AND SHOCK ABSORBING MOUNTING AND R-52 LAMP. MILLER CAT. NO. AE-3484 OR EQUAL	750	8'-0" UNLESS OTHERWISE NOTED
C	2L/40W PENDANT MOUNTED INDUSTRIAL FLUORESCENT AND SHOCK ABSORBING MOUNTING. SYLVANIA PV-10 OR EQUAL.	100	13'-0"

NOTE: FIXTURES SHALL BE CAPABLE OF OPERATION IN & WITHSTANDING AN AMBIENT NOISE LEVEL OF 130db.

NOTES:

1. FOR FEEDERS TO PANELS "PPC" AND "PL" SEE REF. NO. E2.
2. ALL CIRCUITS CONSIST OF 3-#12 AWG CONDUCTORS IN 3/4 INCH CONDUIT UNLESS OTHERWISE NOTED.
3. ALL EXPOSED NONCURRENT CARRYING PARTS OF ELECTRICAL EQUIPMENT SHALL BE GROUNDED BY MEANS OF AN ADDITIONAL WIRE WITH GREEN INSULATION, RUN IN THE SAME CONDUIT AS THE BRANCH CIRCUITS AND OF THE SIZE INDICATED IN TABLE 250-95 OF THE NATIONAL ELECTRICAL CODE FOR THE APPROPRIATE SIZE CIRCUIT PROTECTION.
4. ALL PANELS SHALL HAVE A SEPARATE ISOLATED NEUTRAL AND GROUND BUS.
5. ALL RECEPTACLES SHALL BE MOUNTED 4'-0" ABOVE THE FLOOR.
6. FOR FIXTURE MOUNTING DETAILS & PENETRATION SEALS THRU HUNG CLG SEE ARCHITECTURAL DWGS.

LEGEND

- 3 WIRE, 15A, 125V DUPLEX RECEPTACLE
- RECEPTACLE CROUSE-HINDS AREA-10415 (NO SUBSTITUTE)
- " " " AREA-10315 (" ")
- A INCANDESCENT FIXTURE AND TYPE
- FLUORESCENT FIXTURE
- POWER PANEL
- ---SURFACE MOUNTED CONDUIT & WIRE
- ——CONCEALED CONDUIT & WIRE
- ## CROSS LINES INDICATE THE NUMBER OF CONDUCTORS WHEN MORE THAN THREE.
- CONTACTOR
- 4S SPST SWITCH, NUMBER INDICATES CIRCUIT (MH-4'-6")
- M MOTOR
- DISCONNECT SWITCH
- E EMERGENCY LIGHTING UNIT
- J 4" JUNCTION BOX- M.H.-1'-0" ABV FIN. FL

This Telecommunications facility design and locations and/or equipment therein reflected hereon are satisfactory to this organization.
Harry W. Little MS-CP Nov. 19 65
Signature Office-Symbol Date

APPROVED FOR SAFETY
S.A. Nicholas 11-29-65
SAFETY OFFICE DATE

E1

NATIONAL AERONAUTICS AND SPACE ADMINISTRATION — M S F C HUNTSVILLE, ALABAMA

SANDERS & THOMAS INC. POTTSTOWN PA.-WASH. D.C. MONT. ALA.

EXTENSION OF LOAD TEST ANNEX (BUILDING NO. 4619)

ACOUSTIC HORN ROOM
ELECTRICAL
DISTRIBUTION PLAN & DETAILS

NASA AE CONT. NO. NAS 8-12014

SUBMITTED: W.A. Sanders P.E.	APPROVAL RECOMMENDED: R.S. Garrett	APPROVED: G.D. Ramsey Jr.
S. THOMAS DATE: 12 NOV 1965	C&M DATE: 11/29/65	CHIEF, DESIGN BRANCH NASA DATE: 11/29/65
DESIGNED: WJW	APPROVAL RECOMMENDED: E.L. Damian	DRWG. NO. F&D-M-4619-E1
DRAWN: WJW	CHIEF, ELECT. SECTION	
CHECKED: J.F.	DESIGN DATE: 11-23-65	
SCALE: AS NOTED	SPEC. NO. F & D 640	

FILE NO. 9835 M S F C

4619

MSFC MASTER BID DISK 11-18-2013

NOTICE - GOVERNMENT DRAWING ... OTHER USE ... THE GOVERNMENT MAY HAVE FORMULATED ... AND THE GOVERNMENT HAS NO OBLIGATION ... PERSON OR CORPORATION, OR CONVEY ANY RIGHTS OR PERMISSION TO MANUFACTURE, USE, OR SELL ANY PATENTED INVENTION THAT MAY IN ANY WAY BE RELATED THERETO.

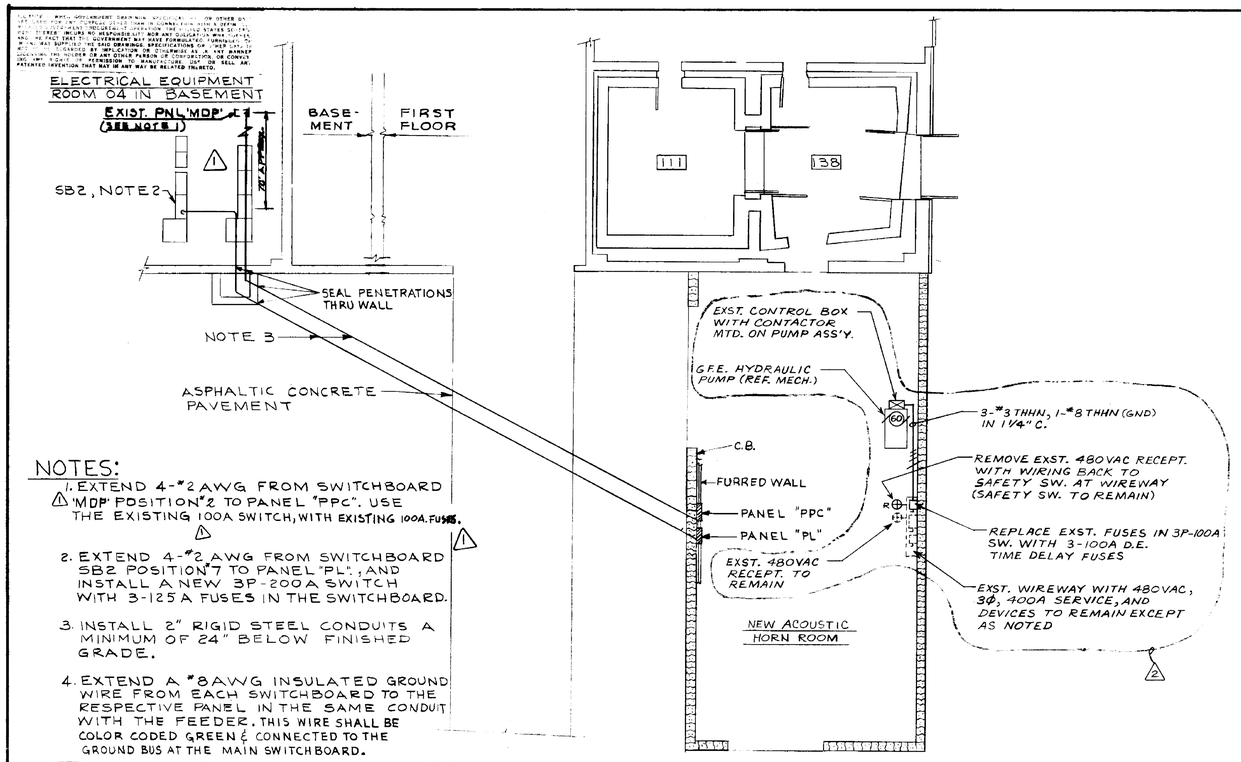

NOTES:

1. EXTEND 4-#2 AWG FROM SWITCHBOARD △1 'MDP' POSITION #2 TO PANEL "PPC". USE THE EXISTING 100A SWITCH, WITH EXISTING 100A. FUSES. △1
2. EXTEND 4-#2 AWG FROM SWITCHBOARD SB2 POSITION #7 TO PANEL "PL", AND INSTALL A NEW 3P-200A SWITCH WITH 3-125A FUSES IN THE SWITCHBOARD.
3. INSTALL 2" RIGID STEEL CONDUITS A MINIMUM OF 24" BELOW FINISHED GRADE.
4. EXTEND A #8 AWG INSULATED GROUND WIRE FROM EACH SWITCHBOARD TO THE RESPECTIVE PANEL IN THE SAME CONDUIT WITH THE FEEDER. THIS WIRE SHALL BE COLOR CODED GREEN & CONNECTED TO THE GROUND BUS AT THE MAIN SWITCHBOARD.
5. ALL ELECTRICAL WORK SHALL CONFORM TO THE N.E.C. △2

DISTRIBUTION PLAN

SCALE: 1/8" = 1'-0"

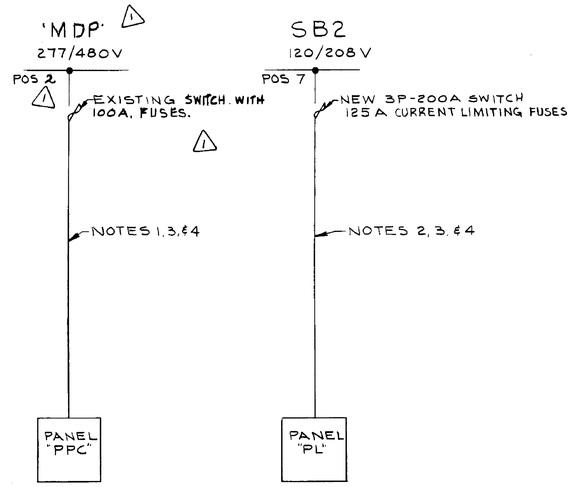

ONE LINE DIAGRAM

△1 JEB 10/25/65 PROVIDED PWR. FOR HYD. PUMP
△1 JM 2-9-66 REROUTE 480V. FEEDER TO PNL 'PPC'

NATIONAL AERONAUTICS AND SPACE ADMINISTRATION — MSFC HUNTSVILLE, ALABAMA

SANDERS & THOMAS INC. POTTSTOWN PA - WASH. D.C. MONT., ALA

EXTENSION OF LOAD TEST ANNEX (BUILDING NO. 4619)

ACOUSTIC HORN ROOM
ELECTRICAL
PLANS, SCHEDULES & DETAILS

I have reviewed the facility design and locations and/or engineering disciplines reflected herein are satisfactory to this organization.
Signature: Henry W. Little, MS-CP, Office Symbol, Date: 11/29/65

APPROVED FOR SAFETY
E. Middleton 11-29-65
EDWIN SAFETY OFFICE DATE

E2

NASA AE CONT. NO. NAS8-2014 — FILE NO. MSFC 9836

SUBMITTED: W.A. Sanders, DS — 12 NOV 1965
APPROVAL RECOMMENDED: R.L. Garrett — AE DATE 11/29/65
APPROVED: H.D. Ramey Jr. — NASA DATE 11/29/65
DESIGNED WJW, DRAWN WJW, T.F., CHECKED AS NOTED
APPROVED FOR COMMANDER: Ed Ramey, ELECT., 11-29-65
SPEC. NO. AD 640
DRWG NO. F&D-M-4619-E2

4619

MSFC MASTER BID DISK 11-18-2013

SEAL OPENING WITH CORRUGATED ASBESTOS CEMENT SIDING TO MATCH EXIST.

RELOCATE 90° ELBOW OUT SIDE BLDG. WALL (4000 A BUS DUCT)

EXIST. 4000 A BUS DUCT

DETAIL 'A'
SCALE 3/4" = 1'-0"

RELOCATE EXIST STARTER TO I BEAM MAKE UP SPLICE FROM EXIST. 7.8 APPROX.

EXIST. PANEL

EXIST. PANEL

SEE DETAIL 'A'

REMOVAL PLAN
SCALE 1/8" = 1'-0"

TUNNEL WALL BELOW

EXIST. OPENING IN FLOOR DOWN TO TUNNEL

2-4" CONDUITS WITH 3-500 MCM IN EACH

GFE ITEM # 2 CUT & SEAL WALL - DOOR

GFE ITEM # 1

NEW 4000 A. BUS DUCT

EXIST. 4000 A BUS DUCT

SEE SOUTH ELEVATION

FIRST FLOOR PLAN
SCALE 1/8" = 1'-0"

EXIST. 9000 A BUS DUCT

EXIST. CHANNEL IRON

WELD

1½" X 1½" X 3/16" L IRON TAP BOX SUPPORT

4000 A. CABLE TAP BOX

SUPPORT DETAIL FOR TAP BOX.
SCALE 3/4" = 1'-0"

EXISTING 3750 KVA TRANSFORMER

EXISTING 480 V. 3 P. 4000 A BUS DUCT

NEW BUS DUCT 4000 A. 3Ø 3W

NEW CABLE TAP BOX

600 A. TRI-PAC CIRCUIT BREAKER

NEW 800 AMP. 600 V. FUSED DISCONNECT SW.

TYPICAL FOR EIGHT UNITS

N.I.C

G.F.E POWER UNIT LOCATED IN TUNNEL

SW. GEAR IN TUNNEL N.I.C

SINGLE LINE

EXIST. 12" CONC. BLOCK WALL

CUT & PATCH WALL

G.F.E ITEM # 3

WESTINGHOUSE VERTICAL HANGER FOR 4000 A. BUS DUCT.

4000 A. 3 W. 600 V. BUS DUCT WESTINGHOUSE STYLE NO. 457D690G06 OR EQ

CONC. FLOOR

TUNNEL CEILING EXIST. PIPE

SECTION 'AA'
SCALE 3/4" = 1'-0"

RELOCATE EXIST. LADDER TO CLEAR INSTALLATION OF NEW BUS DUCT

NEW 4000 A. BUS DUCT

EXIST. ROLL-UP DOOR

EXIST. 4000 A. BUS DUCT

CROSS DUCT SUPPORTS @ 10'-0" CTRS

SOUTH ELEVATION
SCALE 1/8" = 1'-0"

8" CHANNEL 11.5#

WELD

8 WF 17

8" CHANNEL 11.5# OF SUPPORT

WELD

15'-0" ±

¾" PLATE ON 1" GROUT

¾" ANCHOR BOLTS

DETAIL 'G'
SCALE ½" = 1'-0"

2'-0"

2'-0"

8" TYP.

¼ TYP.

¼ TYP.

SECTION 'ZZ'
N.T.S.

NORTH

½" EXPANSION SHIELD - SAFE WORKING LOAD MIN. 600#

CONC. CEILING

½" Ø RODS

4000 A. BUS DUCT

P-1000 UNISTRUT OR EQUAL

SECTION 'BB'
SCALE 3/4" = 1'-0"

MAIN TEST AREA

EXISTING LOAD TEST ANNEX BUILDING

TUNNEL

WORK SITE

NEW ACOUSTIC HORN ADDITION

EXIST. SUBSTATION

SITE PLAN
SCALE 1" = 30'

12" CONC. CEILING

2" X 22½" X ⅜" PLATE WITH 2-½" Ø RODS

WALL BRACKET

4000 A BUS DUCT

½" Ø ROD TWO REQ. FOR EACH BKR.

#2/0 GROUND (ONE UNIT ONLY)

3-500 MCM 3" FLEX CONDUIT

TRI-PAC-L FRAME 600 A 3 W 3 Ø, 480 V.

WESTINGHOUSE BKR.

#⅜ GROUND

POWER UNITS

REMOVE EXIST. TOP TRAY UNDER NEW BKR. ONLY

EXIST. TRAY TO REMAIN

3-500 MCM

N.I.C

EXIST. MAIN BKR

CONC. FLOOR

SECTION '4'
8 REQUIRED

½" EXPANSION SHIELD

4000 AMP BUS DUCT

ROUTE TO BUS DUCT SUPPORT

2-4" CONDUITS WITH 3-500 MCM IN EACH

END CABLE TAP BOX FOR 4000 A. FOR WESTINGHOUSE BUS DUCT, BUS DUCT STYLE NO. 457D690G06 OR EQ

2-4" CONDUITS WITH 3-500 MCM IN EACH

800 AMP. 3 W. 600 V. 3 Ø FUSED SWITCH WITH 800 AMP HI-CAP FUSES.

CONC. BLOCK WALL

1½" X 1½" X ⅜" L IRON RACK SUPPORT EACH TO BLDG WALL

CONC. FL.

SECTION 'C-C'
SCALE ½" = 1'-0"

SECTION 'DD'
SCALE ½" = 1'-0"

8'-2.0" APPROX. LONG BOLTED SECTIONS OF BUS DUCT (SEE SPEC.)

WALL BRACKETS CAT. # P-2556 DESIGN LOAD P-1000, UNISTRUT OR EQ, MOUNT TO WALL BETWEEN BREAKERS, USE ONE ½" EXPANSION SHIELD PER BRACKET. FOUR BRACKET 2000 #/SEE SECTION '4'

EXISTING EMBEDDED UNISTRUT 5'-0" O.C.

END CLOSURE

EXISTING 2-4" X 24" CABLE TRAYS

SEE DRAWING M-1 FOR COOLING WATER CONNECTIONS TO HEAT EXCHANGER

N.I.C

GOVERNMENT FURNISHED EQUIPT. LOCATED IN MAIN TEST AREA OF BLDG. 4619 TO BE MOVED AND INSTALLED.

N.I.C.

EXIST. BAR JOIST, SUPPORT RODS AT EACH PANEL OF JOIST

½" Ø RODS

8'-3" ±

2-4" CONDUITS

4000 A. BUS DUCT

P-1000 UNISTRUT OR EQ.

19'-8" TO FLOOR

SECTION 'F-F'
N.T.S.

NOTE: SUPPORT BUS DUCT AT EACH BAR JOIST

CONNECT #2/0 GROUND (NEW) TO EXIST. GROUND SYSTEM IN PULL BOX, RUN ALONG WALL TO NEW TRI-PAC BKR'S & G.F.E EQUIPMENT

EXIST PULL BOX

EXISTING 2-4" X 24" CABLE TRAYS

G.F.E ITEM # 4

WALL BRACKET CAT. # P-2556 DESIGN LOAD P-1000 UNISTRUT OR EQ. ANCHOR TO EXIST. EMBEDDED UNISTRUT. (SEE SECTION 4)

4000 A. 3 W. 600 V. BUS DUCT (NEW) WESTINGHOUSE STYLE NO. 457D690G06 OR EQ

BUS DUCT SUPPORT SEE SECTION 'BB'

N.I.C

FUTURE EQUIPMENT

N.I.C

EXIST COL.

N.I.C

N.I.C.

OPENING IN FLOOR (EXIST.)

2-4" CONDUITS WITH 3-500 MCM IN EACH, RUN 1'-0" BELOW CEILING, PULL EACH CONDUCTOR OUT OF CONDUIT AND LEAVE 8'-0" LENGTH OF CABLE

TUNNEL PLAN
SCALE ⅛" = 1'-0"

* EQUIPMENT FURNISHED AND INSTALLED BY OTHERS CONTRACTOR MUST COORDINATE WORK WITH THE CONTRACTING OFFICER. N.I.C = NOT IN CONTRACT

GENERAL NOTES

CONTRACTOR MUST VERIFY ALL DIMENSIONS IN THE FIELD AND COORDINATE THESE DIMENSIONS WITH G.F.E BUS DUCT SECTIONS. (SEE SPEC.)

This transmittal is for information only. It does not constitute authority for any action which may affect facility design and functions and/or supporting structures, unless and until it has been reviewed and found satisfactory to this organization.

Henry W. Little — Signature — MTS-CP — Office Symbol — Nov 29, 65 — Date

APPROVED FOR SCHEME 11-29-65 DATE

E 3

REV.	BY	DATE		C.I. NO.	APPROVED
1	JM	11-21-66	DELETED INSTALLATION OF G.F.E POWER UNITS.	1137-1	

NATIONAL AERONAUTICS AND SPACE ADMINISTRATION — M S F C — HUNTSVILLE, ALABAMA

HIGH TEMPERATURE CONTROL SYSTEM
ELECTRICAL
PLANS & DETAILS

NASA AE CONT. NO.			FILE NO. MSFC 9837
SUBMITTED: CHIEF	APPROVAL RECOMMENDED: R.S. Garrett	APPROVED: S. V. Ramsey Jr.	
AE: DATE:	LAB: DATE: 11/29/65	CHIEF, DESIGN BRANCH	NASA DATE: 11/29/65
DESIGNED J.M. DRAWN CHECKED	APPROVAL RECOMMENDED: E. D. Dunlap	DRWG. NO.	F&D-M 4619-E3
SCALE: AS NOTED	CHIEF, ELECT. SECTION DESIGN DATE: 11-29-65	SPEC. NO. F & D-(4619)	

MSFC-FORM 232 (REV. DEC., 1960)

4619

MSFC MASTER BID DISK 11-18-2013

NOTICE. — WHEN GOVERNMENT DRAWINGS, SPECIFICATIONS, OR OTHER DATA ARE USED FOR ANY PURPOSE OTHER THAN IN CONNECTION WITH A DEFINITELY RELATED GOVERNMENT PROCUREMENT OPERATION, THE UNITED STATES GOVERNMENT INCURS NO RESPONSIBILITY NOR ANY OBLIGATION WHATSOEVER; AND THE FACT THAT THE GOVERNMENT MAY HAVE FORMULATED, FURNISHED, OR IN ANY WAY SUPPLIED THE SAID DRAWINGS, SPECIFICATIONS OR OTHER DATA IS NOT TO BE REGARDED BY IMPLICATION OR OTHERWISE AS IN ANY MANNER LICENSING THE HOLDER OR ANY OTHER PERSON OR CORPORATION, OR CONVEYING ANY RIGHTS OR PERMISSION TO MANUFACTURE, USE, OR SELL ANY PATENTED INVENTION THAT MAY IN ANY WAY BE RELATED THERETO.

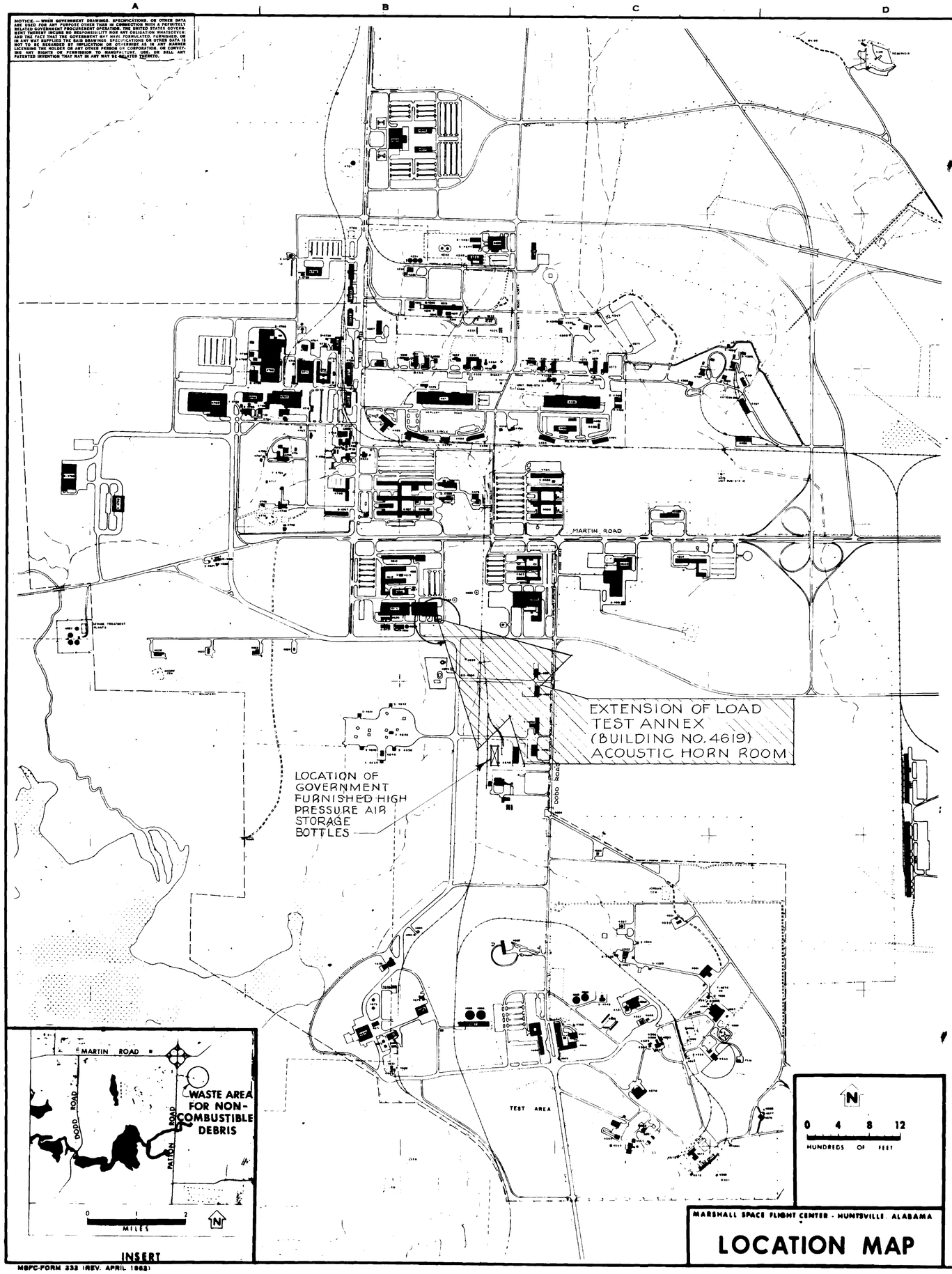

MARSHALL SPACE FLIGHT CENTER · HUNTSVILLE, ALABAMA

LOCATION MAP

DRAWING INDEX

DWG. NO.	FILE NO.	TITLE
		GENERAL
		TITLE SHEET
F&D-M-4619-GI	9817	LOCATION MAP, DRAWING INDEX & ABBREVIATIONS
		CIVIL
F&D-M-4619-CI	9818	SITE PLAN & DETAILS
F&D-M-4619-C2	9819	HIGH PRESSURE PIPING
		ARCHITECTURAL
F&D-M-4619-AI	9821	FLOOR & ROOF PLANS
F&D-M-4619-A2	9822	ELEVATIONS & BUILDING SECTION
F&D-M-4619-A3	9823	SECTIONS & DETAILS
F&D-M-4619-A4	9824	SECTIONS & DETAILS
F&D-M-4619-A5	9825	SECTIONS & DETAILS
		STRUCTURAL
F&D-M-4619-SI	9827	FOUNDATIONS & ROOF FRAMING PLANS & DETAILS
F&D-M-4619-S2	9828	FOUNDATIONS FOR SHOCK SIMULATORS
		MECHANICAL
F&D-M-4619-MI	9830	HEATING & VENTILATING PLAN, DETAILS & SCHEDULES
F&D-M-4619-M2	9831	MUFFLER SYSTEM PLAN & DETAILS
F&D-M-4619-M3	9832	COMPRESSED AIR SYSTEM PLAN & DETAILS
F&D-M-4619-M4	9833	COMPRESSED AIR SYSTEM SCHEMATICS
		ELECTRICAL
F&D-M-4619-EI	9835	DISTRIBUTION PLAN & DETAILS
F&D-M-4619-E2	9836	PLANS, SCHEDULES & DETAILS
F&D-M-4619-E3	9837	HIGH TEMPERATURE CONTROL SYSTEM ELECTRICAL PLANS & DETAILS

ABBREVIATIONS

AB	ANCHOR BOLT	GA	GAGE
ACT	ACOUSTICAL		
ASB	ASBESTOS	HORIZ	HORIZONTAL
AT	ACOUSTICAL TILE		
AGG	AGGREGATE	INV	INVERT
BD	BOARD	LP	LOW PRESSURE STEAM SUPPLY
BKR	BREAKER		
BLDG	BUILDING	MATL	MATERIAL
CAT	CATALOGUE	NO	NUMBER
C.C.	CENTER TO CENTER		
CEM	CEMENT	OC	ON CENTERS
CKT	CIRCUIT		
CLG	CEILING	PL	PLATE
COL	COLUMN	PAVT	PAVEMENT
CONT	CONTINUOUS		
		RECP	RECEPTACLE
DS	DOWN SPOUT	REF	REFERENCE
		REINF	REINFORCING
EL	ELEVATION	REQD	REQUIRED
EXIST	EXISTING		
EXP	EXPANSION	SUSP	SUSPENDED
FD	FLOOR DRAIN	TYP	TYPICAL
FIN	FINISH		
FL	FLOOR	VERT	VERTICAL
FOUND	FOUNDATION		
FTG	FOOTING	WF	WIDE FLANGE

The Telecommunications facility design and locations and/or supporting structures reflected herein are satisfactory to this organization.

Harry W Little MS-CP Nov. 29, 65
Signature Office Symbol Date

REV.	BY	DATE		C.I. NO.	APPROVED

NATIONAL AERONAUTICS AND SPACE ADMINISTRATION — M S F C — HUNTSVILLE, ALABAMA

SANDERS & THOMAS INC. POTTSTOWN PA. - WASH., D.C.

EXTENSION OF LOAD TEST ANNEX (BUILDING NO. 4619)
ACOUSTIC HORN ROOM
LOCATION MAP
DRAWING INDEX & ABBREVIATIONS

NASA AE CONT. NO. NAS 8-12014		FILE NO. MSFC 9817
SUBMITTED: [illegible] P C; JSCV TREAS; AE. DATE: 28 NOV 1965	APPROVAL RECOMMENDED: R S Barrett; LAB. DATE: 11/29/65	APPROVED: E. D. Ramsey Jr., CHIEF, DESIGN BRANCH; NASA DATE: 11/29/65
DESIGNED BD; DRAWN ED; CHECKED M.M; SCALE: NONE	APPROVAL RECOMMENDED: [illegible], CHIEF, CIVIL SECTION; DESIGN DATE: 11/29/65; SPEC. NO. F&D-640	DRWG. NO. F&D-M-4619-GI

11-29-65

GI

MSFC-FORM 232 (REV. APRIL 1962)

MSFC MASTER BID DISK 11-18-2013

4619

NOTES - REVISION 1

1. MOUNT HYDRAULIC PUMP ON RUBBER-IN-SHEAR VIBRATION ISOLATORS; VIBRATION MOUNTINGS & CONTROLS, INC. TYPE R-3, 525 POUND CAPACITY. (4 REQ'D.)
2. SUPPORT PIPING AT 8 FT. INTERVALS WITH P-1000 UNISTRUT, ANCHORED TO FLOOR WITH 1/4" SELF-DRILLING ANCHORS.
3. HYDROSTAT WATER LINE AT 150 PSIG AND DRAIN AT 5 PSIG.

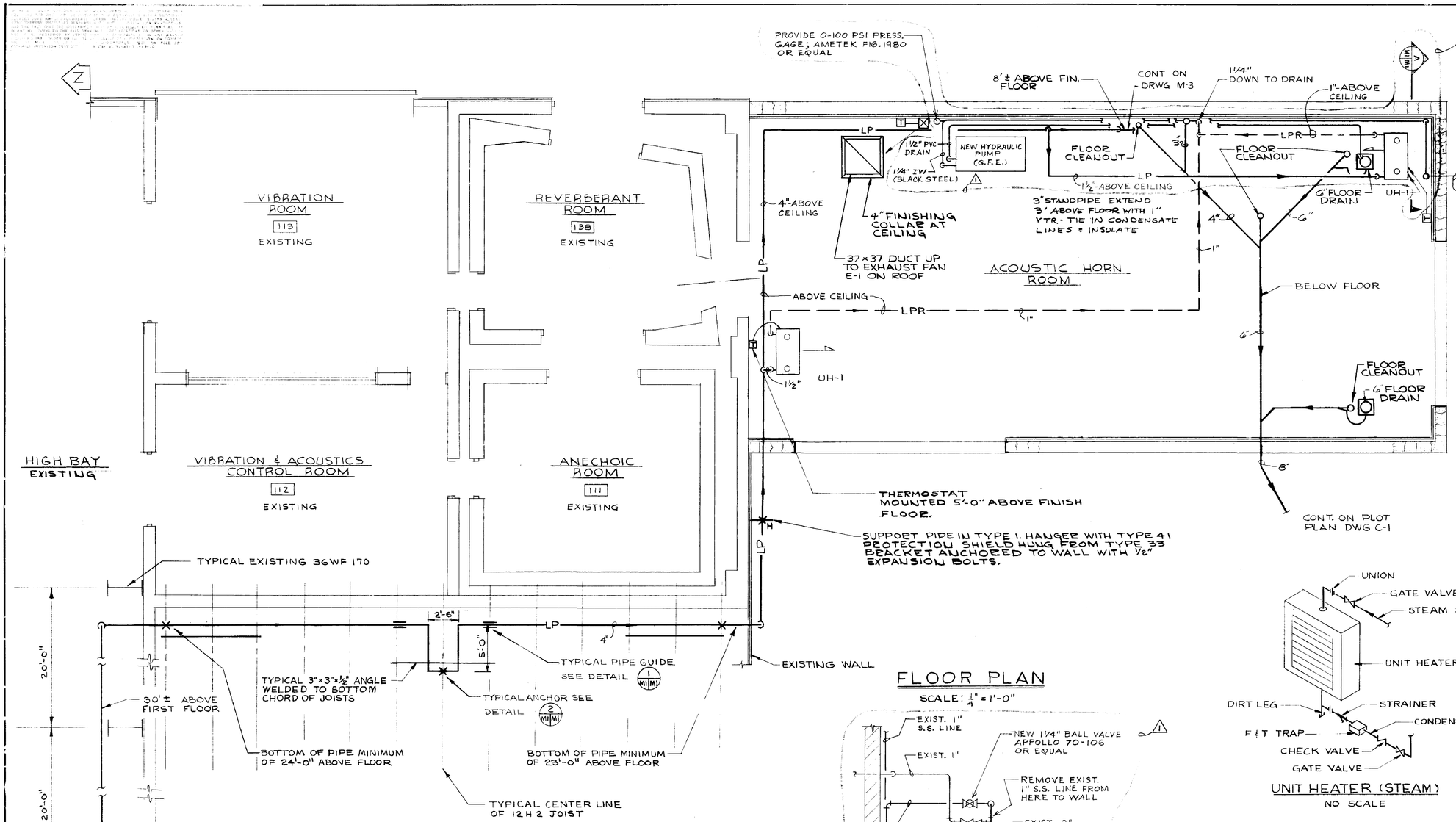

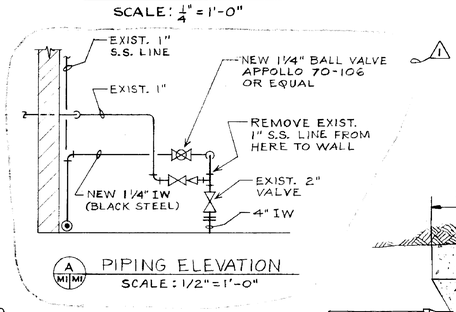

A M1/M1 PIPING ELEVATION
SCALE: 1/2"=1'-0"

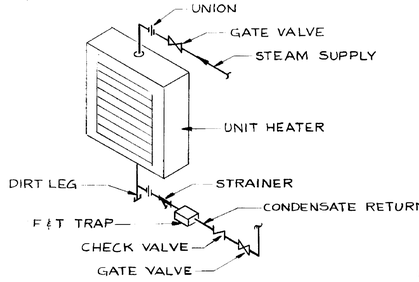

UNIT HEATER (STEAM)
NO SCALE

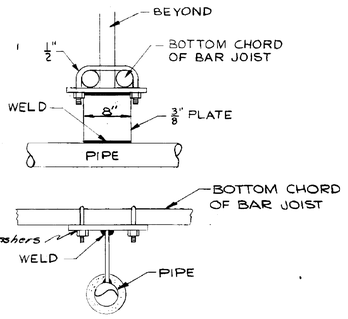

TYPICAL PIPE ANCHOR DETAIL 2 M1/M1
NO SCALE

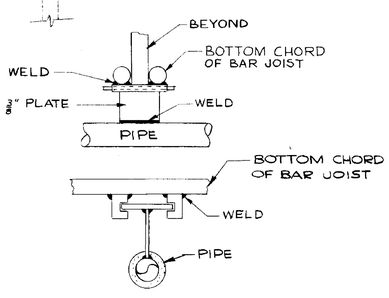

TYPICAL PIPE GUIDE DETAIL 1 M1/M1
NO SCALE

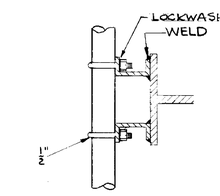

PLAN

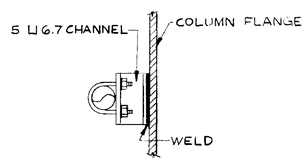

ELEVATION
COLUMN MOUNTED PIPE ANCHOR DETAIL 3 M1/M1
NO SCALE

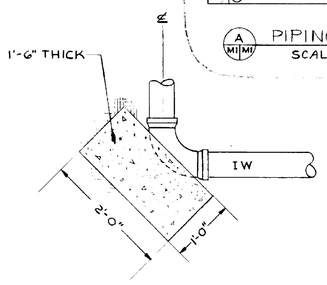

TYPICAL THRUST BLOCK DETAIL
NO SCALE

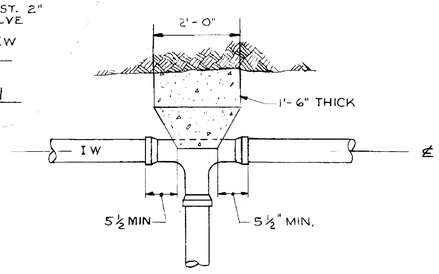

PLAN
TYPICAL THRUST BLOCK DETAIL
NO SCALE

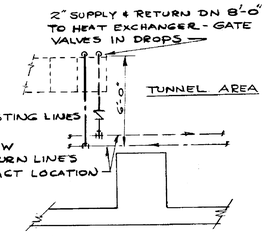

HEAT EXCHANGER PIPING
SEE DRAWING E-3

CONT ON PLOT PLAN DWG C-1
SEE DETAIL FOR THRUST BLOCKS
4" BELOW GRADE
IW

NOTES

1. UNIT HEATERS SHALL BE RATED 81,000 BTUH AT 60°F ENTERING AIR AND 15 PSIG STEAM, 1100 CFM, ⅛ HP, 1550 RPM MOTOR
2. UNIT HEATER TRAPS SHALL BE FLOAT AND THERMOSTATIC TYPE RATED 255 POUNDS PER HOUR AT 1 PSIG PRESSURE DIFFERENTIAL.
3. UNIT HEATERS SHALL BE MOUNTED 10'-0" ABOVE FINISHED FLOOR.
4. EXHAUST FAN E-1 SHALL BE RATED 4,500 CFM AT ⅜" STATIC PRESSURE, WITH ½ HP MOTOR, INTEGRAL SAFETY DISCONNECT SWITCH, BACKDRAFT DAMPER & BIRDSCREEN.

The telecommunications facility design and locations and/or supporting structures reflected herein are satisfactory to this organization.

Signature: Harry W. Gittler — Office Symbol: MS-CP — Date: 11-29-65

APPROVED FOR SAFETY
ENGR. SAFETY OFFICE — DATE 11-29-65

M1

1	JEB 10/27/65	ADD HYDRAULIC PUMP & PIPING	120-0

NATIONAL AERONAUTICS AND SPACE ADMINISTRATION — M S F C HUNTSVILLE, ALABAMA

SANDERS & THOMAS INC. POTTSTOWN PA. - WASH. D.C. - MC ALA.

EXTENSION OF LOAD TEST ANNEX (BUILDING NO. 4619)

ACOUSTIC HORN ROOM
HEATING & VENTILATING
PLAN, DETAILS & SCHEDULES

NASA/AE CONT. NO. NAS8-12014			FILE NO. M-S-F-C 9830
SUBMITTED: W.A. Goudin P.E.	APPROVAL RECOMMENDED: R.S. Harrett		APPROVED: R.D. Garney
DESIGNED: W.S.B.	DRAWN: T.C.	CHECKED: R.S.	APPROVAL RECOMMENDED: B. Bain, MECHANICAL
DATE: 12 NOV 1965	LEAD:	DATE: 11/29/65	APPROVED: DATE 11/29/65
SCALE: AS NOTED	SPEC NO. F&D-640		DRWG. NO. F&D-M-4619-M1

4619

MSFC MASTER BID DISK 11-18-2013

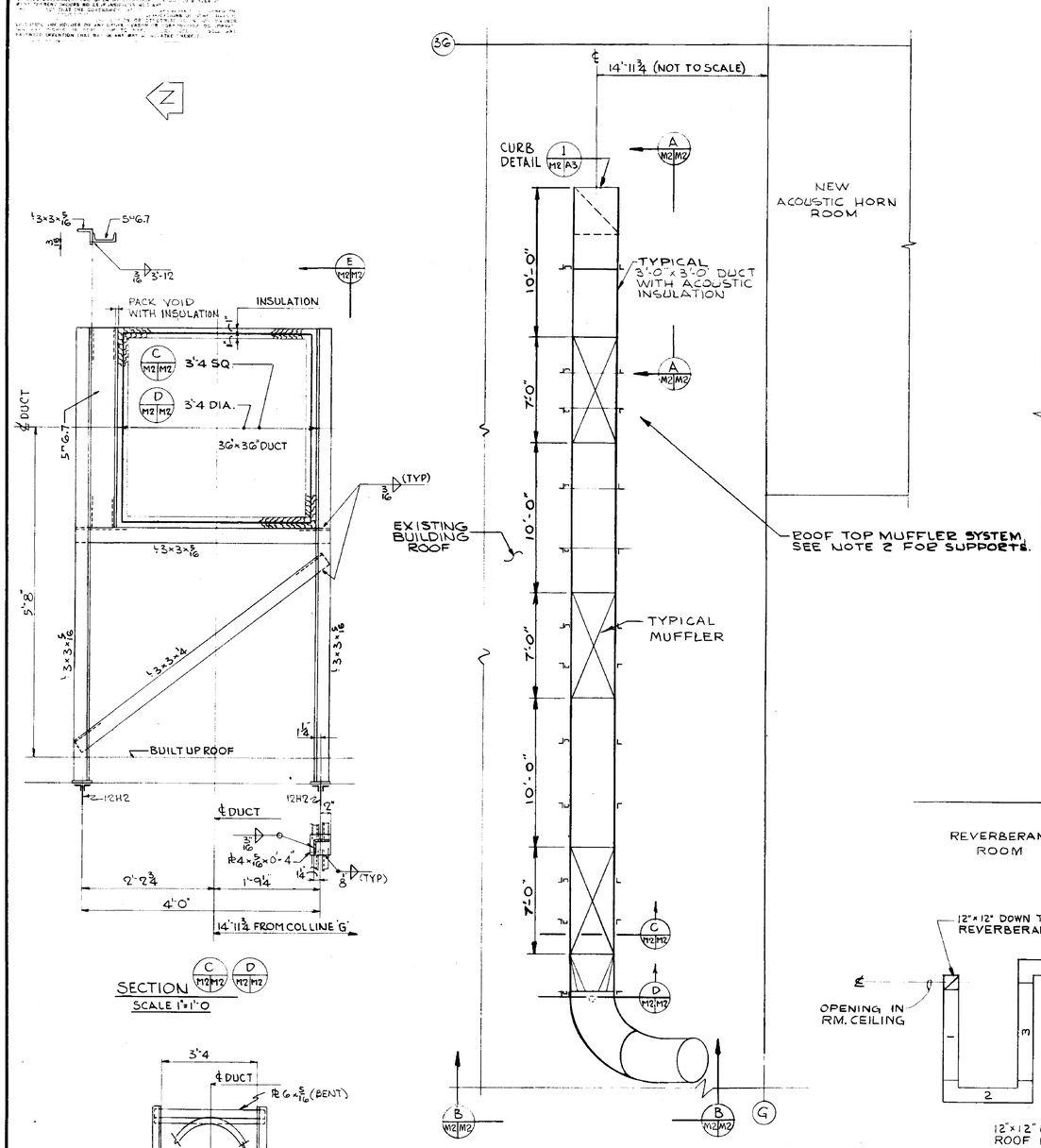

SECTION C M2/M2 D M2/M2
SCALE 1"=1'-0

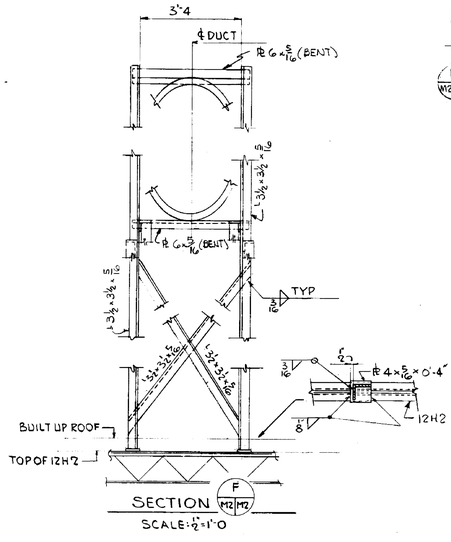

SECTION F M2/M2
SCALE: ½"=1'-0

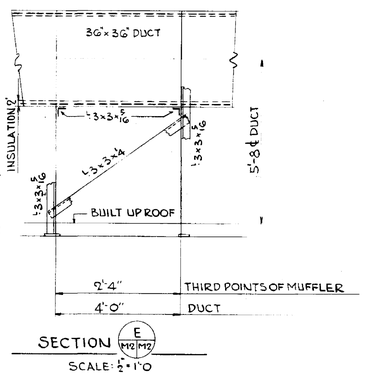

SECTION E M2/M2
SCALE: ½"=1'-0

ROOF PLAN
SCALE: ¼"=1'-0"

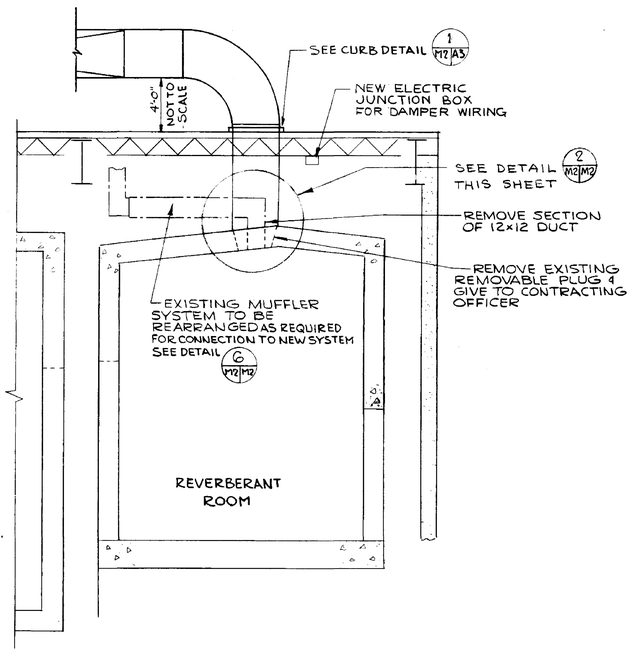

SECTION A M2/M2
SCALE: ¼"=1'-0"

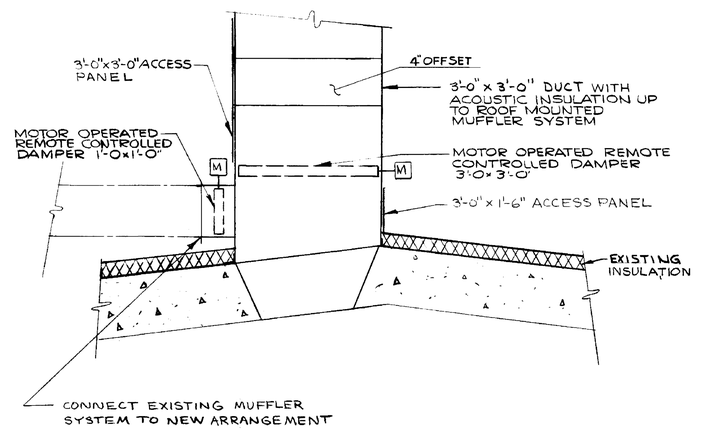

DETAIL 2 M2/M2
SCALE: ¾"=1'-0"

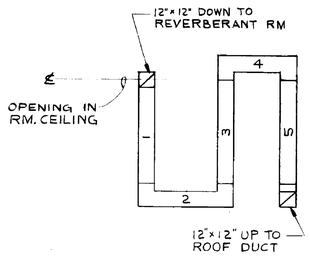

PLAN

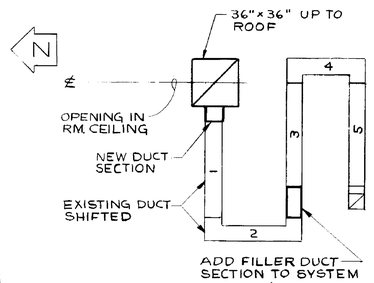

PLAN

DETAIL G M2/M2
EXISTING H & V DUCT MUFFLER SYSTEM
SCALE: ¼" = 1'-0"

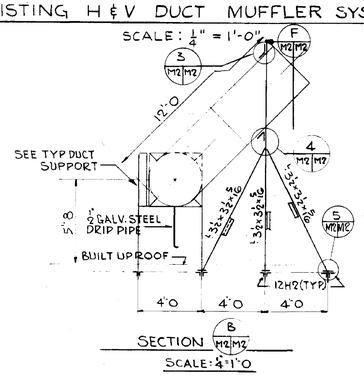

SECTION B M2/M2
SCALE: ½"=1'-0

REARRANGED H & V DUCT MUFFLER SYSTEM
SCALE: ¼"=1'-0"

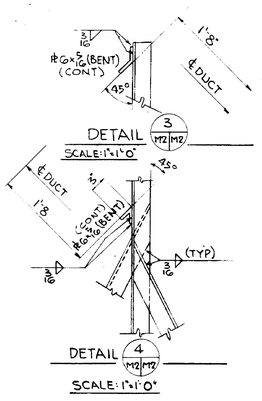

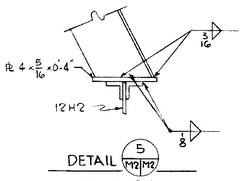

NOTES:

1. DUCT SIZES ARE CLEAR INSIDE DIMENSIONS WITH ACOUSTIC LINER IN PLACE.
2. FOR ROOF PENETRATION DETAIL SEE DWG. A5 OFFSET DUCT TO AVOID STRUCTURAL MEMBERS
3. CONTROL OF MOTOR OPERATED DAMPERS SHALL BE PROVIDED FROM SELECTOR SWITCHES MOUNTED IN THE EXISTING MASTER CONTROL CONSOLE LOCATED IN ROOM 112.

A Telecommunications facility design and locations and/or supporting structures reflected herein are satisfactory to this organization.

Signature: Harry W. Tillis — Office Symbol: MS-EP — Date: Nov 29, 65

APPROVED FOR SAFETY
E.B. Nicholas — ENGR. SAFETY OFFICE — 11-29-65 DATE

M2

NATIONAL AERONAUTICS AND SPACE ADMINISTRATION — M S F C — HUNTSVILLE, ALABAMA

SANDERS & THOMAS INC. POTTSTOWN PA. WASH. D.C. MONT. ALA.

EXTENSION OF LOAD TEST ANNEX (BUILDING NO. 4619)

ACOUSTIC HORN ROOM
MUFFLER SYSTEM
PLAN & DETAILS

NASA AE CONT NO. NAS 8-12014	FILE NO. M S F C 9831
DESIGNED W.B. Sanders P.E.	APPROVAL RECOMMENDED R.S. Barrett
DATE 12 NOV 1965	CHF DATE 11/29/65
DRAWN W.B.G.	APPROVED C.B. Ramsey Jr.
CHECKED T.C.	CHF DESIGN BRANCH DATE 11/29/65
SCALE AS NOTED	APPROVAL RECOMMENDED C.B. Ramsey SECTION DIVISION DATE 11/29/65
	SPEC. NO. F&D 640
	DRWG. NO. F&D-M-4619-M2

4619

MSFC MASTER BID DISK 11-18-2013

NOTICE - THIS DRAWING IS THE PROPERTY OF THE UNITED STATES GOVERNMENT AND IS LOANED TO THE RECIPIENT SUBJECT TO THE AGREEMENT OR UNDERSTANDING THAT IT SHALL NOT BE REPRODUCED, COPIED OR USED IN WHOLE OR IN PART AS THE BASIS FOR MANUFACTURE OR SALE OF ITEMS OR PROCESSES NOT OWNED BY THE GOVERNMENT (WITH PROPER LICENSE AGREEMENT), NOR FOR ANY USE INCONSISTENT WITH THE INTEREST OF THE GOVERNMENT. NEITHER THIS DRAWING NOR ANY INFORMATION SUBMITTED WITH IT SHALL BE DISCLOSED TO ANY UNAUTHORIZED PERSON WITHOUT THE PRIOR APPROVAL OF THE GOVERNMENT. NOTHING HEREIN SHALL BE CONSTRUED AS GRANTING BY IMPLICATION OR OTHERWISE ANY RIGHTS LICENSING THE HOLDER OR ANY OTHER PERSON OR CORPORATION OR CONVEYING ANY RIGHTS OR PERMISSION TO MANUFACTURE, USE OR SELL ANY PATENTED INVENTION THAT MAY IN ANY WAY BE RELATED THERETO.

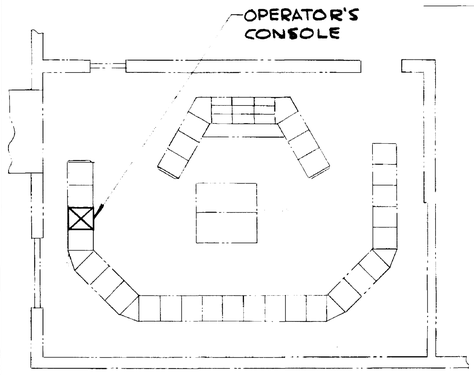

ROOM 108

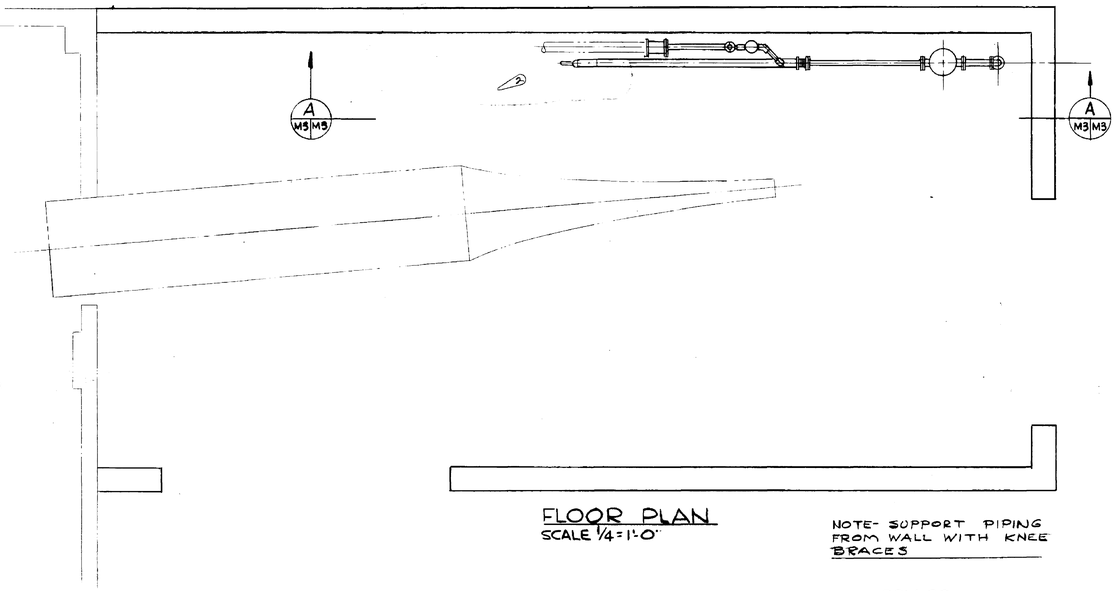

FLOOR PLAN
SCALE 1/4 = 1'-0"

NOTE- SUPPORT PIPING FROM WALL WITH KNEE BRACES

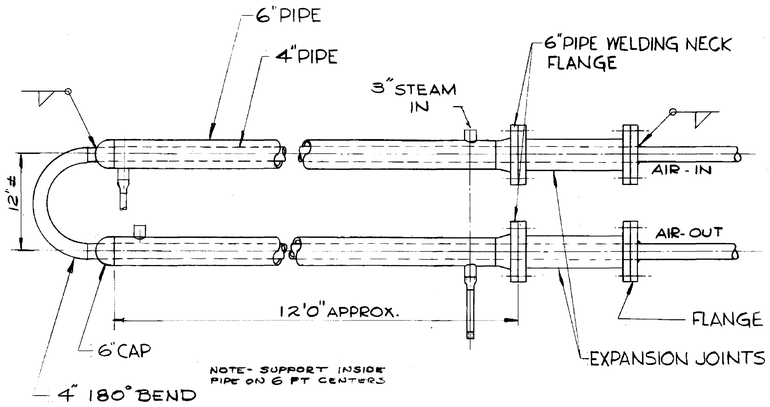

DETAIL (1 / M3 M3)
AIR HEATER AH 25
SCALE: NONE

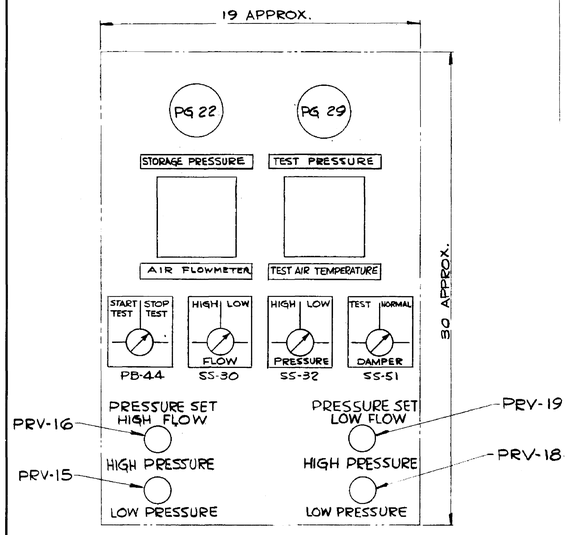

OPERATOR'S CONSOLE
CP-50
SCALE: NONE

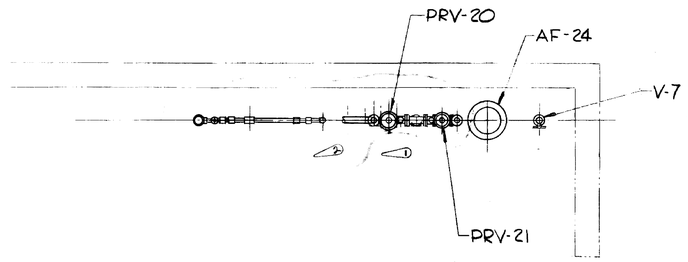

SECTION (B / M3 M3)
SCALE: 1/4 = 1'-0

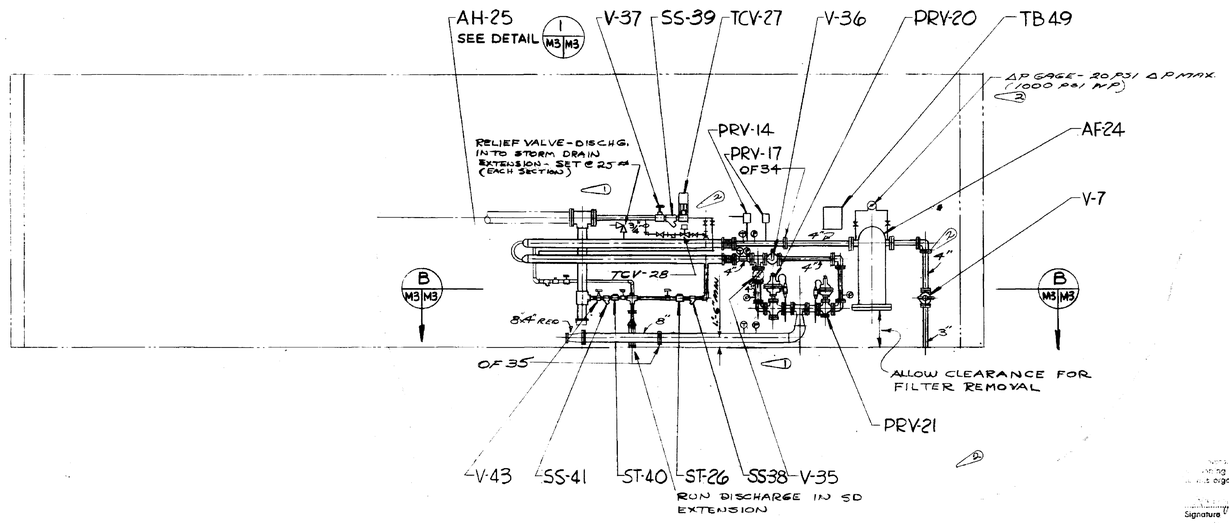

SECTION (A / M3 M3)
SCALE: 1/4 = 1'-0

3	JD 9/6/66	GENERAL REVISIONS	17137-4
1	JD 4/6/66	REVISED HEATER & MANIFOLD	17137-3

NATIONAL AERONAUTICS AND SPACE ADMINISTRATION — M S F C — HUNTSVILLE, ALABAMA

SANDERS & THOMAS INC. POTTSTOWN PA. WASH. D.C. MONT. ALA.

EXTENSION OF LOAD TEST ANNEX (BUILDING NO. 4619)

ACOUSTIC HORN ROOM
COMPRESSED AIR SYSTEM
PLAN & DETAILS

NOTE: Facility design and locations and/or ... as reflected herein are satisfactory ... organization.

Signature — Office Symbol — Date

APPROVED FOR SAFETY — E.S.D. SAFETY OFFICE — DATE 11-29-65

M3

NASA AS CONT. NO. NAS8-12014

DESIGNED		APPROVAL RECOMMENDED	
CHECKED	12 NOV 1965	APPROVED	11/29/65
DRAWN	DM	APPROVED	
CHECKED	DM		
SCALE	AS NOTED		

FILE NO. M S F C	9832
SUPERVISOR	
CHIEF DESIGN BRANCH	
MANAGER	11/29/65
DRWG. NO.	F&D-M-4619-M3
SPEC. NO. F&D	640

4619

MSFC MASTER BID DISK 11-18-2013

ROOF FRAMING PLAN
SCALE: 1/8" = 1'-0"
FOUNDATION PLAN
SCALE: 1/8" = 1'-0"
TYPICAL FOOTING STEP DETAIL
SCALE: 3/8" = 1'-0"
TYPICAL CONSTRUCTION JOINT
SCALE: 3/4"-1'-0"
66-44 WWF (DO NOT EXTEND WWF THRU JOINT)
GREASE ONE END & WRAP WITH KRAFT PAPER
3/4"Φ DOWEL (SMOOTH) 1'-3" LG, 1'-0" O.C.
FACE OF EXIST BUILDING
FIN. FL EL 581.00'
EL 577.00'
FACE OF EXIST FOOTING
SECTION A S1|S1
SECTION B S1|S1
SCALE: 1/4"-1'-0"
SECTION E S1|S1
SCALE: 3/4"-1'-0"
SECTION F S1|S1
SCALE 3/4"-1'-0"
NOTES:
1. ALL CONCRETE SHALL DEVELOP A COMPRESSIVE STRENGTH OF NOT LESS THAN THREE THOUSAND POUNDS PER SQUARE INCH (3,000 P.S.I.) AT AN AGE OF TWENTY-EIGHT DAYS.
2. PROVIDE 16B26 BEAMS AS INDICATED IF TRACKS FOR DOORS ARE PROVIDED. IF TRACK IS NOT REQUIRED, SUBSTITUTE 16J7 JOISTS FOR 16B26.
DETAIL 3 S1|S1
SCALE: 3/4"=1'-0"
DETAIL 2 S1|S1
SCALE: 3/4"-1'-0"
6" REINF CONC SLAB ON GRADE 66-44 WWF FL EL 581.00'
FACE OF EXIST BLDG
SECTION G S1|S1
SCALE: 3/4"-1'-0"
TYPICAL BASE PLATE & ANCHOR BOLT DETAIL FOR TUBE SUPPORT
SCALE: 1"=1'-0"
PLAN - HIGH PRESSURE AIR STORAGE FIELD
SCALE: 3/16"-1'-0"
3 SPACES @ 22'-2" = 66'-6"
SECTION C S1|S1
SCALE: 3/4"=1'-0"
DETAIL 4 S1|S1
SCALE: 1"=1'-0"
SECTION D S1|S1
SCALE: 3/8"-1'-0"
DETAIL S1|S1 PIERS P2
SCALE: 1 1/2"-1'-0"
DETAIL 1 S1|S1 PIER P1
SCALE 1 1/2"-1'-0"
CLEAN EXTERIOR COATING FROM TANK AT SUPPORT
CONTRACTOR TO CLEAN EXTERIOR COATING FROM TANK IN THIS AREA AND VERIFY O.D. OF TANK PRIOR TO ORDERING SUPPORTS
APPROVED FOR SAFETY
NATIONAL AERONAUTICS AND SPACE ADMINISTRATION
M S F C HUNTSVILLE, ALABAMA
SANDERS & THOMAS INC. POTTSTOWN A - WASH., D.C.
EXTENSION OF LOAD TEST ANNEX (BUILDING NO. 4619)
ACOUSTIC HORN ROOM
FOUNDATION & ROOF FRAMING PLANS & DETAILS
NASA AF CONT. NO. NAS 8-12014
FILE NO. MSFC 9827
12 NOV 1965
R.H. & T.B.
D.R.
E.G.
AS NOTED
S1
F&D-M-4619-S1
4619

NOTICE — WHEN GOVERNMENT DRAWINGS, SPECIFICATIONS, OR OTHER DATA ARE USED FOR ANY PURPOSE OTHER THAN IN CONNECTION WITH A DEFINITELY RELATED GOVERNMENT PROCUREMENT OPERATION, THE UNITED STATES GOVERNMENT THEREBY INCURS NO RESPONSIBILITY NOR ANY OBLIGATION WHATSOEVER; AND THE FACT THAT THE GOVERNMENT MAY HAVE FORMULATED, FURNISHED, OR IN ANY WAY SUPPLIED THE SAID DRAWINGS, SPECIFICATIONS OR OTHER DATA IS NOT TO BE REGARDED BY IMPLICATION OR OTHERWISE AS IN ANY MANNER LICENSING THE HOLDER OR ANY OTHER PERSON OR CORPORATION, OR CONVEYING ANY RIGHTS OR PERMISSION TO MANUFACTURE, USE, OR SELL ANY PATENTED INVENTION THAT MAY IN ANY WAY BE RELATED THERETO.

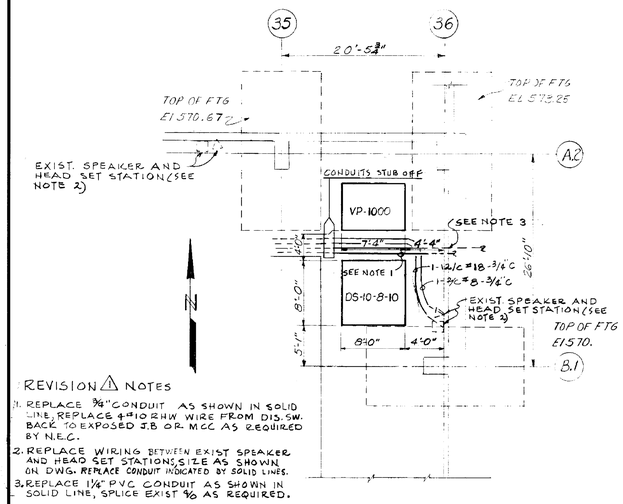

REVISION ⚠ NOTES

1. REPLACE 3/8" CONDUIT AS SHOWN IN SOLID LINE, REPLACE 4 #10 RHW WIRE FROM DIS. SW. BACK TO EXPOSED J.B. OR MCC AS REQUIRED BY N.E.C.
2. REPLACE WIRING BETWEEN EXIST SPEAKER AND HEAD SET STATIONS, SIZE AS SHOWN ON DWG. REPLACE CONDUIT INDICATED BY SOLID LINES.
3. REPLACE 1¼" PVC CONDUIT AS SHOWN IN SOLID LINE, SPLICE EXIST ¾ AS REQUIRED.

⚠

PART PLAN
EXTENSION TO LOAD TEST ANNEX
SCALE 1/8"=1'-0"

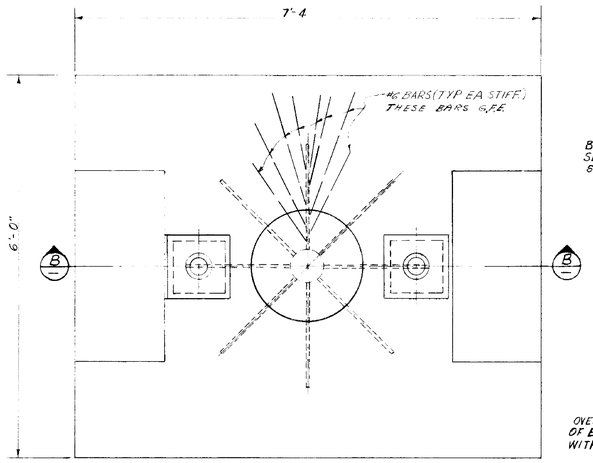

PLAN VP1000 DROP
ISOLATED MASS
SCALE-1"=1'0"

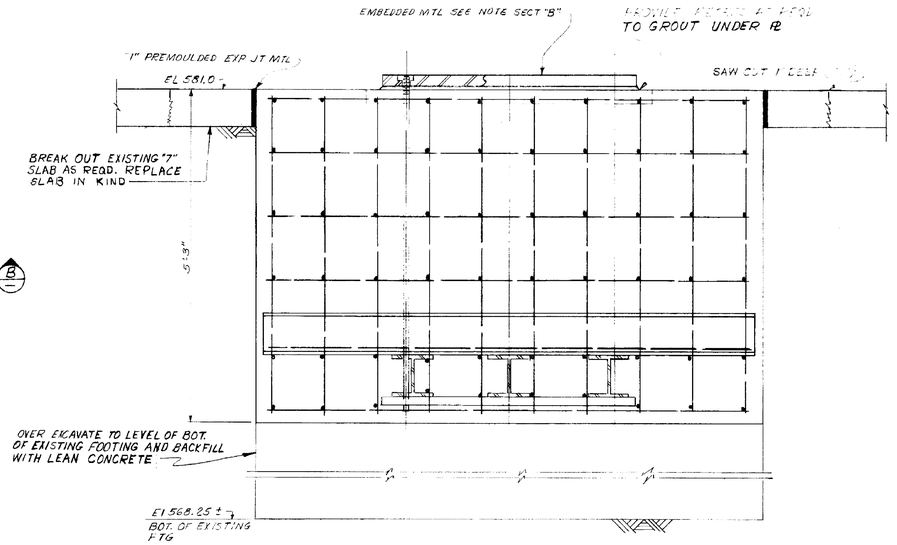

SECTION - (A)
SCALE 1"=1'0"

GENERAL NOTES:

FOUNDATION CONCRETE SHALL HAVE A MIN. 28 DAY COMP. STRENGTH OF 2000 RSI.
"LEAN" CONCRETE SHALL HAVE A MIN 28 DAY COMP. STRENGTH OF 2000 RSI.
THE EMBEDDED PARTS SHOWN ARE MACHINERY PARTS AND MUST BE SET IN ACCORDANCE WITH TOLERANCES SUPPLIED BY THE EQUIPMENT MANUFACTURER.
THE CONTRACTOR SHALL FURNISH AND INSTALL ALL SUPPORTS ADJUSTING SCREWS SHIMS AND OTHER MATERIALS AND LABOR NECESSARY TO PROPERLY SUPPORT ALIGN AND HOLD THE EMBEDDED ITEMS.
THE CONTRACTOR SHALL COOPERATE FULLY WITH THE MFR'S REP IN THE FINAL ALIGNMENT CHECKS AND ADJUSTMENTS AND SHALL FURNISH ALL LABOR AND MATERIALS NECESSARY FOR THESE ADJUSTMENTS

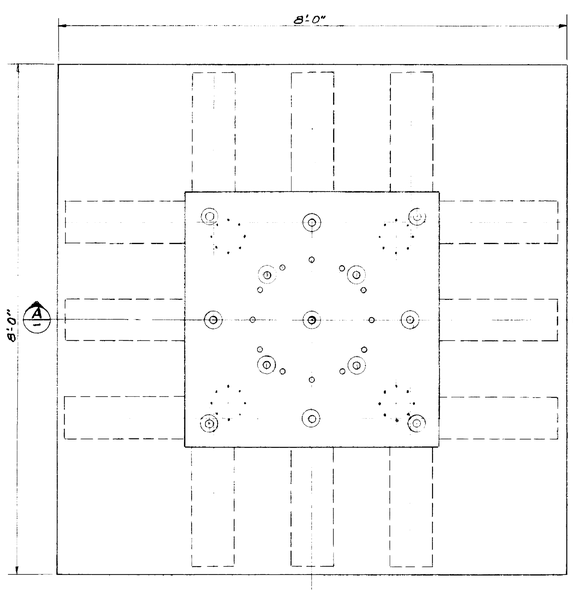

PLAN DS 10-8-10 SHOCK SIMULATOR
ISOLATED MASS
SCALE 1" = 1'-0"

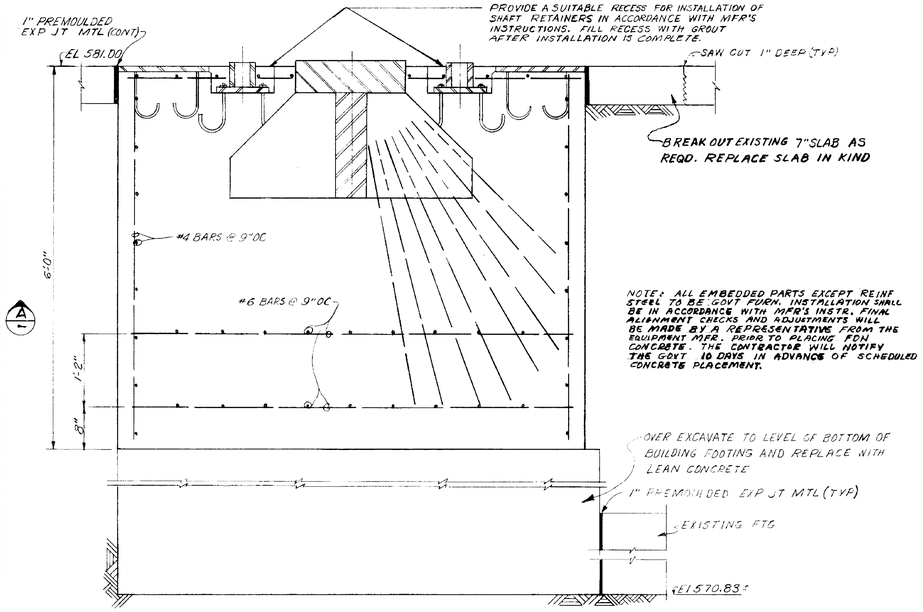

SECTION - (B)
SCALE-1"=1'-0"

REV.	BY	DATE		C.I. NO.	APPROVED
⚠	JM	2-15-66	REROUTE DAMAGED CONDUITS		

NATIONAL AERONAUTICS AND SPACE ADMINISTRATION — M S F C — HUNTSVILLE, ALABAMA

EXTENSION OF LOAD TEST ANNEX (BUILDING NO. 4619)
ACOUSTIC HORN ROOM
FOUNDATIONS FOR SHOCK SIMULATORS

NASA AE CONT. NO.		FILE NO. MSFC 9828
SUBMITTED: CHIEF	APPROVAL RECOMMENDED: R.J. Garrett	APPROVED: R.D. Ramsey, Jr. CHIEF DESIGN BRANCH
AE. DATE:	LAB. DATE: 11/29/65	MASA DATE: 11/29/65
DESIGNED DRAWN CHECKED	APPROVAL RECOMMENDED: DESIGN DATE: 11-29-65	DRWG. NO. F&D-M-4619-S2
SCALE:	SPEC. NO. F&D-640	

Telecommunications facility design and locations and/or supporting structures reflected herein are satisfactory to this organization.
Signature — Office Symbol — Date
11-29-65

REF NO. S2

MSFC-FORM 232 (REV. APRIL 1962)

4619

MSFC MASTER BID DISK 11-18-2013

GEORGE C. MARSHALL SPACE FLIGHT CENTER

HUNTSVILLE, ALABAMA

REHABILITATION OF BUILDING 4619-PHASE I

SMITH SECKMAN REID, INC.
CONSULTING ENGINEERS
NASHVILLE, TENNESSEE

NATIONAL AERONAUTICS AND SPACE ADMINISTRATION

MSFC MASTER BID DISK 11-18-2013

FRC-AH-4619-T1

LOCATION MAP

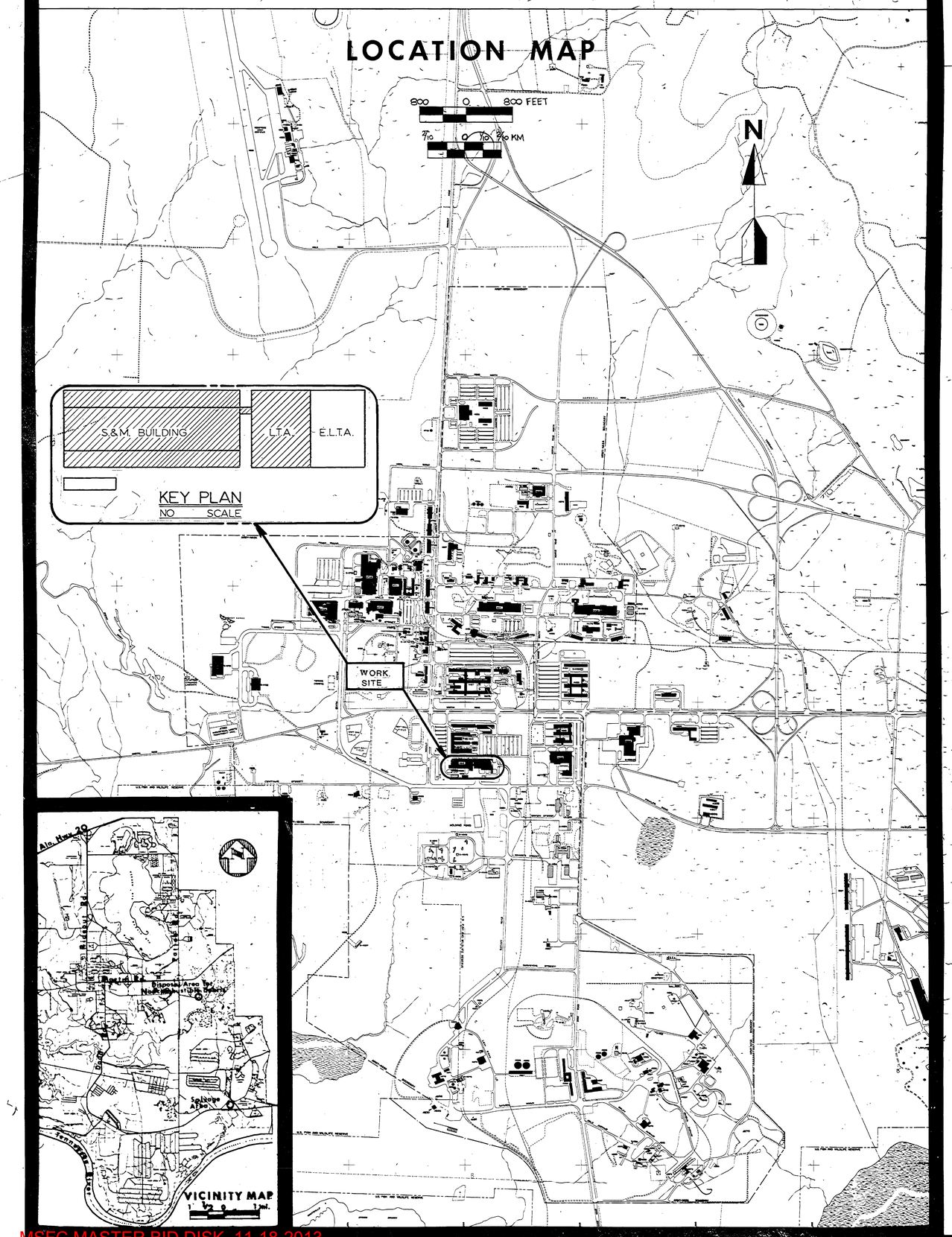

INDEX OF DRAWINGS

DRAWING NUMBER	TITLE
FAC-AY-4619-X1	LOCATION MAP-INDEX OF DRAWINGS
FAC-AY-4619-A1	FLOOR PLAN-WEST S&M BLDG.
FAC-AY-4619-A2	FLOOR PLAN-EAST S&M BLDG.
FAC-AY-4619-A3	NORTH ELEVATIONS-S&M BLDG.
FAC-AY-4619-A4	ELEVATIONS & SCHEDULES
FAC-AY-4619-A5	SOUTH ELEVATIONS - S&M BLDG. PASSIVE SOLAR SYSTEM
FAC-AY-4619-A6	DETAILS -S&M BLDG. PASSIVE SOLAR SYSTEM
FAC-AY-4619-A7	CEILING PLAN- WEST S&M BLDG.
FAC-AY-4619-A8	CEILING PLAN -EAST S&M BLDG.
FAC-AY-4619-M1	HVAC SECTIONS & DETAILS
FAC-AY-4619-M2	HVAC S&M BLDG. -WEST END
FAC-AY-4619-M3	HVAC S&M BLDG. -EAST END
FAC-AY-4619-M4	H&V LOAD TEST ANNEX
FAC-AY-4619-M5	HVAC S&M BLDG.- PENTHOUSES
FE-C-4619-AC-7 (FOR DEMOLITION ONLY)	HVAC LOAD TEST ANNEX-DEMOLITION
FE-C-4619-AC-9 (FOR DEMOLITION ONLY)	HVAC LOAD TEST ANNEX-DEMOLITION
FAC-AY-4619-E1	ELECTRICAL-SCHEDULES & DETAILS
FAC-AY-4619-E2	ELECTRICAL S&M BLDG.-WEST END
FAC-AY-4619-E3	ELECTRICAL S&M BLDG.-EAST END
FAC-AY-4619-E4	ELECTRICAL-LOAD TEST ANNEX
FAC-AY-4619-AA	INTERIOR BUILDING ELEVATIONS
FAC-AY-4619-AB	INSULATION DETAILS
FAC-AY-4619-AC	INSULATION DETAILS

TELECOMMUNICATIONS EQUIPMENT AFFECTED BY THIS CONTRACT WORK IS NOT TO BE ALTERED OR REMOVED BY THIS CONTRACTOR. CONTACT TMS COR IN THE EVENT OF A CONFLICT.

SIGNATURE OFFICE SYMBOL DATE

REV.	BY	DATE	REVISION	C.I. NO.	APPROVED

NATIONAL AERONAUTICS AND SPACE ADMINISTRATION

MARSHALL SPACE FLIGHT CENTER HUNTSVILLE, ALABAMA

SMITH SEGKMAN REID, INC.

REHABILITATION OF BLDG. 4619 PHASE 1

LOCATION MAP

NASA AE CONTRACT NO. NAS8-32449 FILE NO. MSFC 11814

SUBMITTED: Roger R. Cline AE DATE: 1-4-78

APPROVAL RECOMMENDED: LAR DATE: 2-3-78

APPROVED: NASA DATE: 7/31/78

REF. NO. X-1

DESIGNED RRC DRAWN J.G. CHECKED R.R.C. SCALE: SHOWN

APPROVAL RECOMMENDED: CHIEF, DESIGN DATE:

SPEC. NO. FAC-1805

DWG NO. FAC-AY-4619-X1

MSFC MASTER BID DISK 11-18-2013

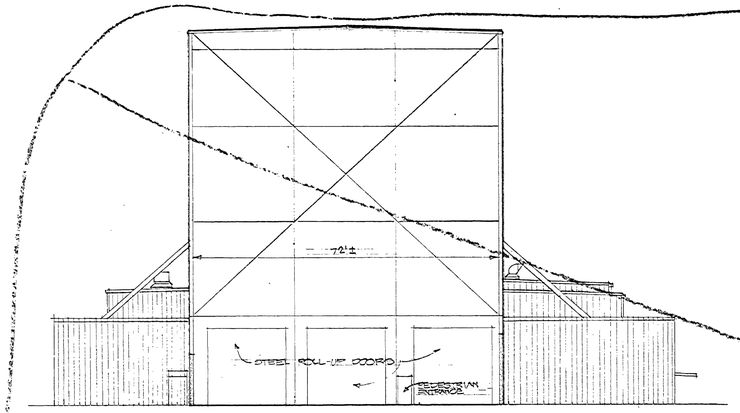

EAST INTERIOR WALL ELEVATION
STRUCT & MECH. BLDGS.

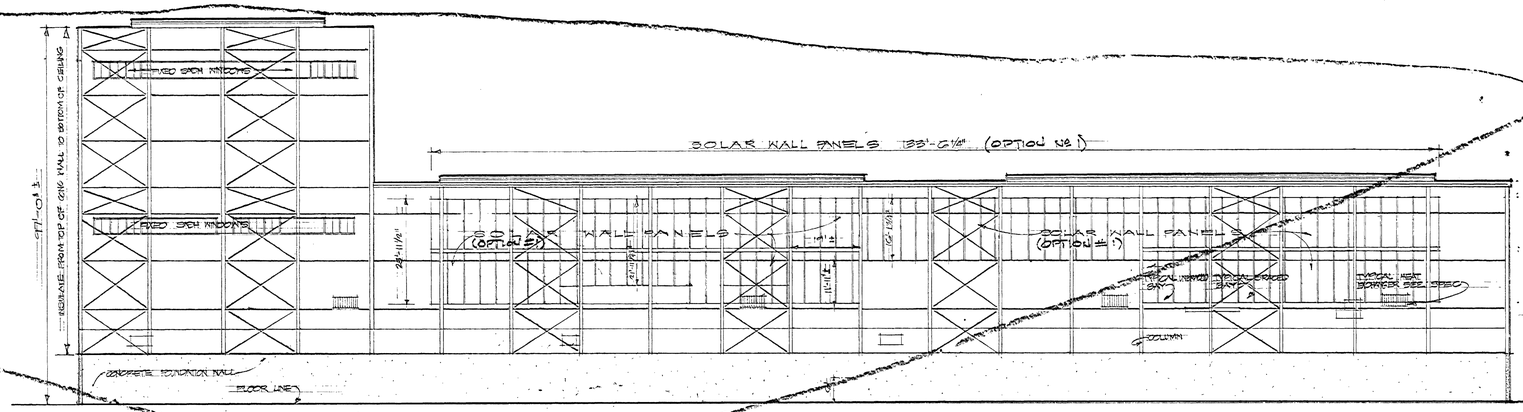

SOUTH INTERIOR WALL ELEVATION STRUCT. & MECH. BLDG
NOTE: AREA SHOWN FOR SOLAR WALL PANELS NOT TO BE INSULATED.

VOID

VOID

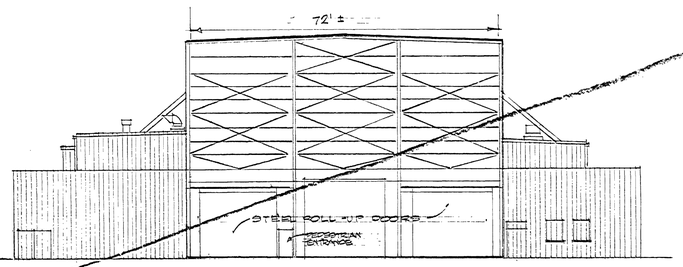

WEST INTERIOR WALL ELEVATION
STRUCT. & MECH. BLDG.

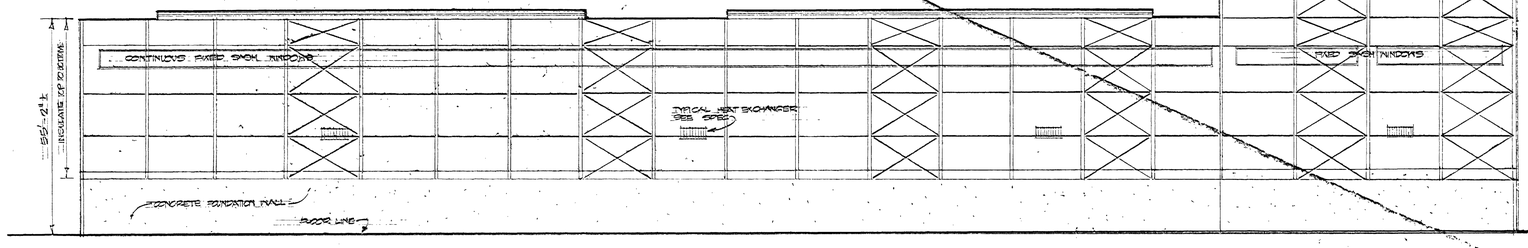

NORTH INTERIOR WALL ELEVATION
SCALE: 1/16"=1'-0" STRUCT & MECH BLDG.

2

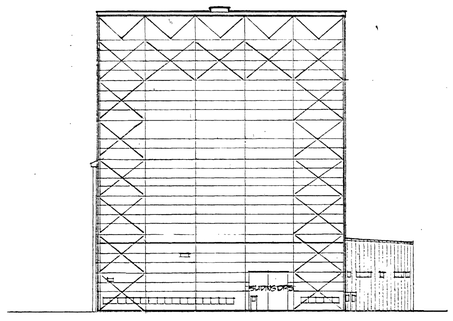

WEST

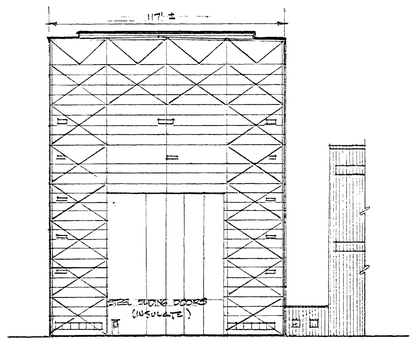

SOUTH

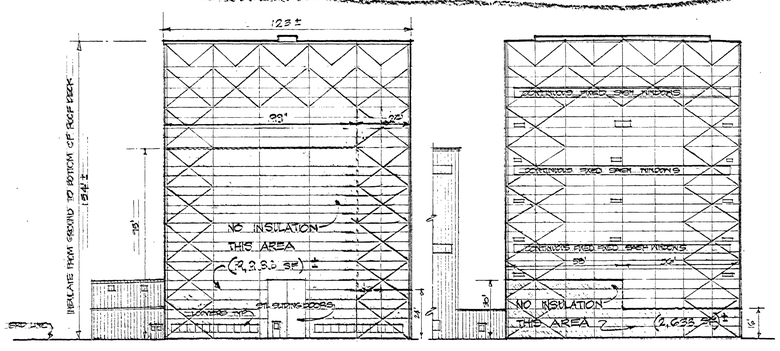

EAST

NORTH

INTERIOR WALL ELEVATION LOAD TEST ANNEX
SCALE 1/32"=1'-0"

REV.	BY	DATE	REVISION	C.I. NO.	APPROVED
2	JWT	10/23/78	ELIMINATE INSULATION IN STRUCT. W&E BLDS 33/65-1		
1	JWT	8/28/78	ELIMINATE AREAS OF INSULATION	—	

NATIONAL AERONAUTICS AND SPACE ADMINISTRATION
MARSHALL SPACE FLIGHT CENTER HUNTSVILLE, ALABAMA

REHABILITATION BUILDING 4619
PHASE I
INSULATE INTERIOR WALLS. INTERIOR ELEVATIONS

NASA AE CONTRACT NO. NAS8-32449 FILE NO. MSFC-1822-AA

SUBMITTED: AE: DATE: DESIGNED: J.W.S. DRAWN: J.W.S. CHECKED: DIVISION SCALE: AS SHOWN

APPROVAL RECOMMENDED: LAB: DATE: 7/11/78
APPROVAL RECOMMENDED: CHIEF, ARCHITECTURAL BRANCH
DESIGN DATE: 6-20-78
SPEC. NO. PAC 1009

APPROVED: CHIEF ENGINEERING DIVISION
NASA DATE: 7/31/78
DWG NO. PAC-AY-4619-AA

REF. NO. AA

TELECOMMUNICATIONS EQUIPMENT AFFECTED BY THIS CONTRACT WORK IS NOT TO BE ALTERED OR REMOVED BY THE CONTRACTOR. CONTACT THE COR IN THE EVENT OF A CONFLICT.
SIGNATURE OFFICE SYMBOL DATE

Ben Barfield CS21 6/23/78
Michael McHale ASD1-M 6-22-78

MSFC MASTER BID DISK 11-18-2013

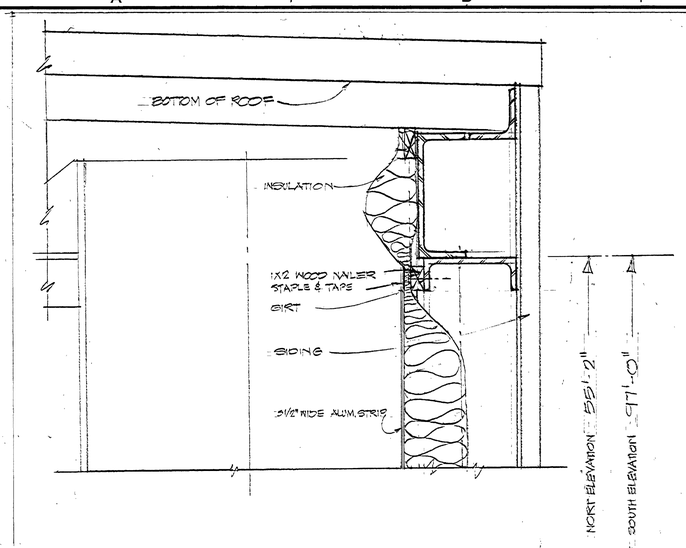

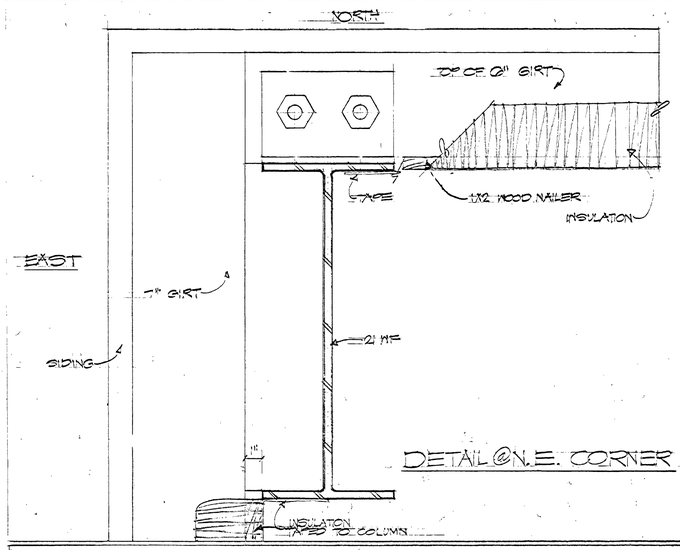

DETAIL @ N.E. CORNER

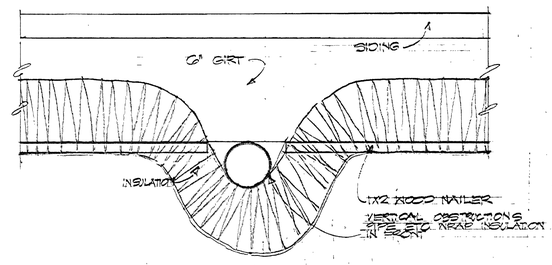

DETAIL @ VERTICAL OBSTRUCTIONS

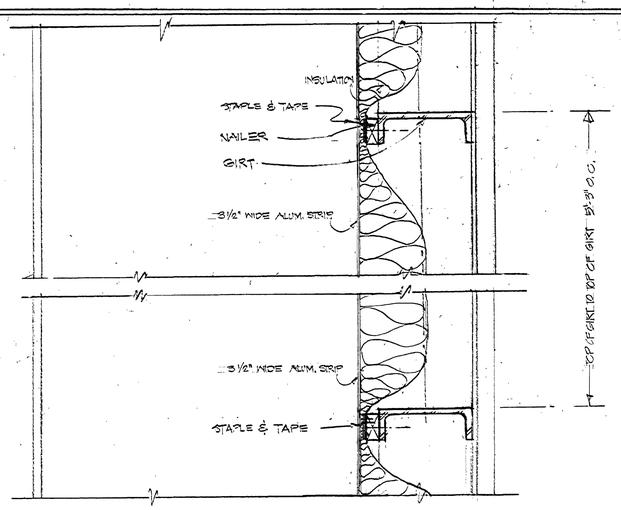

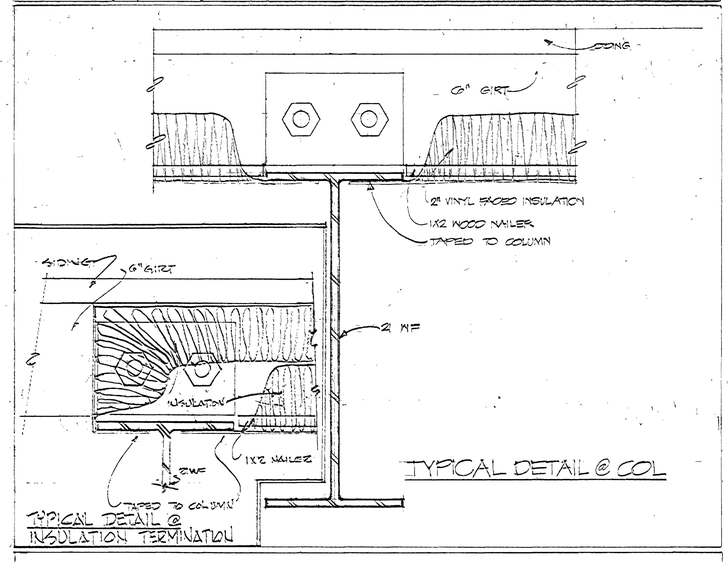

TYPICAL DETAIL @ COL

TYPICAL DETAIL @ INSULATION TERMINATION

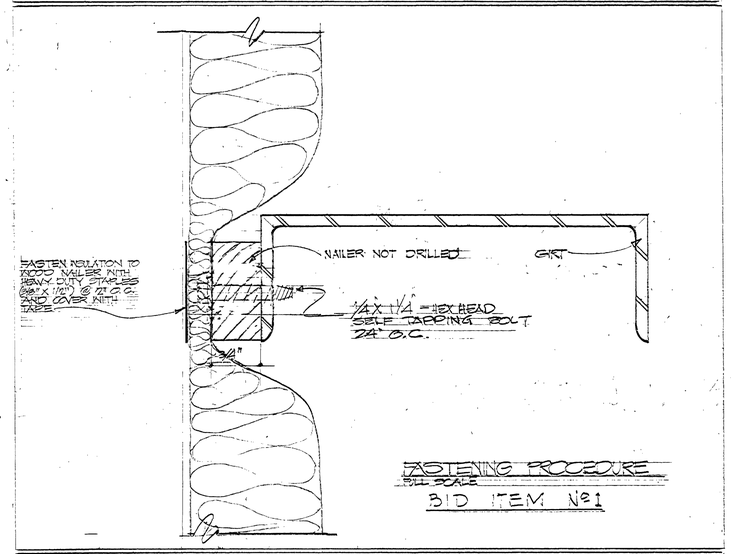

FASTENING PROCEDURE
FULL SCALE
BID ITEM Nº 1

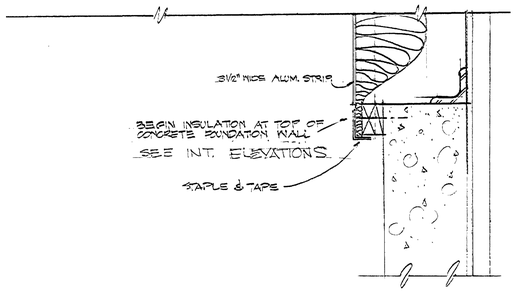

TYPICAL WALL SECTION
SCALE: 3"=1'-0" FOR NORTH & SOUTH WALLS OF WEST SECTION

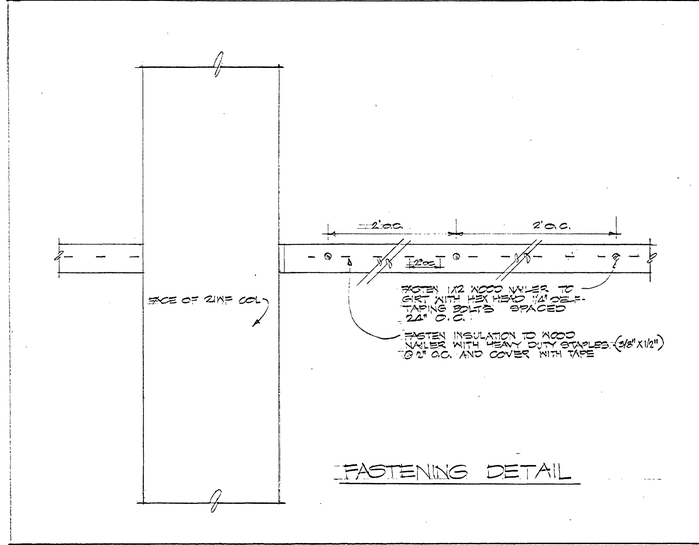

FASTENING DETAIL

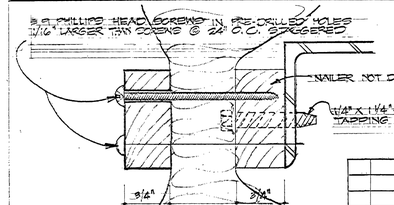

FASTENING PROCEDURE
BID ITEM Nº 2

Note "A" - USE DETAILS THAT ARE APPLICABLE FOR "LOAD TEST ANNEX ONLY"

Ben Bagley CSA
10/23/78

TELECOMMUNICATIONS EQUIPMENT AFFECTED BY THIS CONTRACT WORK IS NOT TO BE ALTERED OR REMOVED BY THE CONTRACTOR. CONTACT THE COR IN THE EVENT OF A CONFLICT.

D.K. Kahn AP37 6/23/78
SIGNATURE OFFICE SYMBOL DATE

Nicholas L. McNabb
PD14M
6-22-78

REV.	BY	DATE	REVISION	C.I. NO.	APPROVED
2	JWT	10/23/78	CHANGE TITLE & ADD NOTE "A"	93165-1	JWT 10/23/78
1	JWT	8/28/78	CHANGED INSULATION THICKNESS & DETAILS	-	JWT 8/28/78

NATIONAL AERONAUTICS AND SPACE ADMINISTRATION
MARSHALL SPACE FLIGHT CENTER HUNTSVILLE, ALABAMA

REHABILITATION BUILDING 4619
PHASE 1
INSULATE INTERIOR WALLS.

NASA AE CONTRACT NO. NAS8-32449 FILE NO. MSFC 11822-A3

REF. NO.	AE:	DATE:
A3		

SUBMITTED: X
APPROVAL RECOMMENDED: E. Hodges LAB: DATE: 7-11-78
APPROVED: Ray Wiseman CHIEF ENGINEERING DIVISION NASA DATE: 7/31/78
DESIGNED J.G.G.
DRAWN B.S/J.S.W./J.G.G.
CHECKED SIMPSON
SCALE: 3"=1'-0"
APPROVAL RECOMMENDED: Ben Bagley CHIEF, ARCHITECTURAL BRANCH DESIGN DATE: 6-20-78
SPEC. NO: FAC 909
DWG NO. FAC-AY-4619-A3

MSFC - FORM 433 (REV. 7-71)

MSFC MASTER BID DISK 11-18-2013

TYPICAL ATTACHMENT DETAILS

3" = 1'-0"

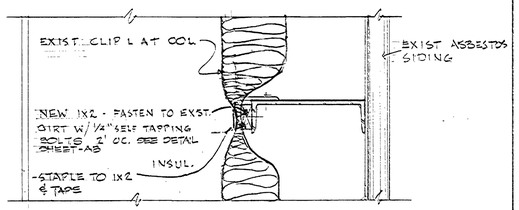

SECTION

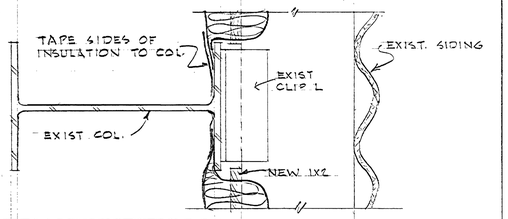

PLAN SECTION

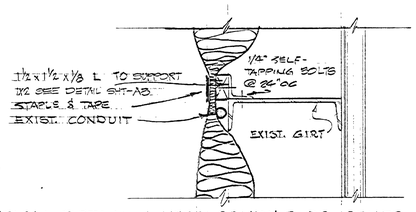

TYPICAL DETAIL WHERE CONDUIT OR OTHER HORIZONTAL OBSTRUCTION IS ON THE FACE OF THE GIRT

3" = 1'-0"

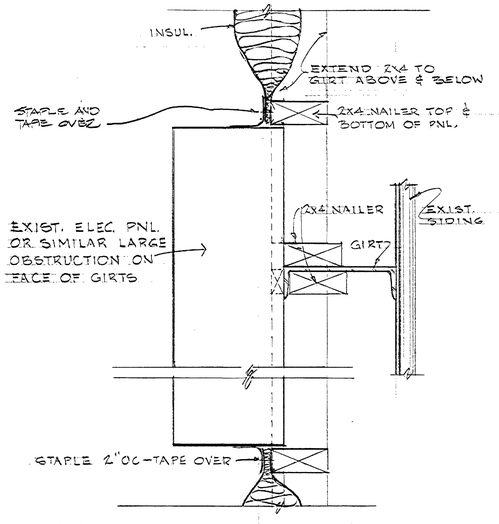

DETAIL AT ELEC. PANEL 3" = 1'-0"

NOTE - USE SIMILAR DETAIL AT DUCTWORK PENETRATIONS OR OTHER LARGE OBSTRUCTIONS.

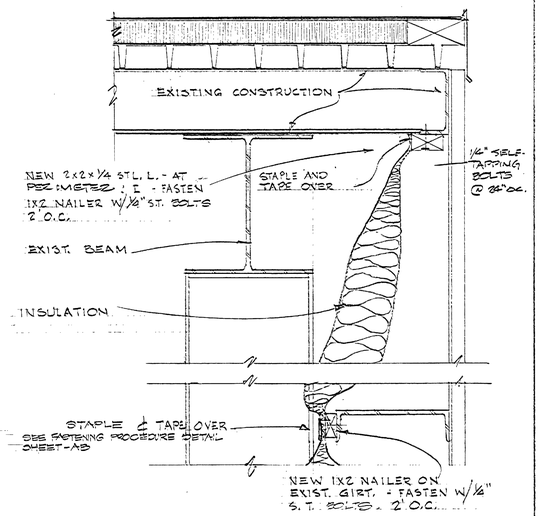

DETAIL AT TOP OF WALL

3" = 1'-0"

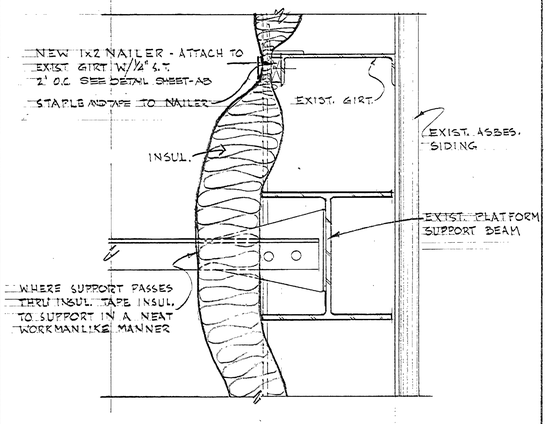

DETAIL AT PLATFORM SUPPORT BEAM

3" = 1'-0"

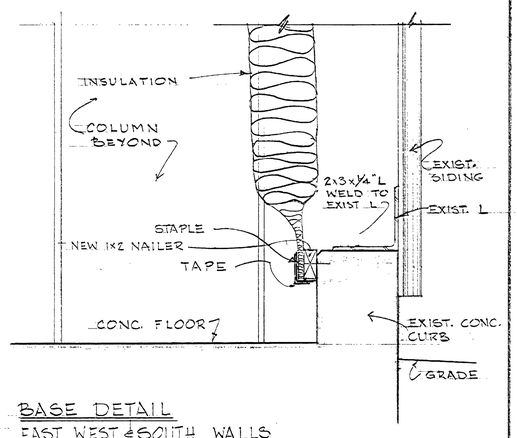

BASE DETAIL
EAST, WEST & SOUTH WALLS

3" = 1'-0"

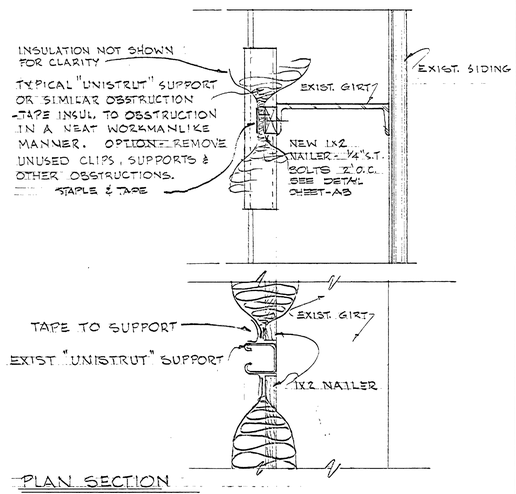

PLAN SECTION

DETAIL OF "UNISTRUT" OR SIMILAR OBSTRUCTIONS ON THE GIRT FACE

3" = 1'-0"

DETAILS ON THIS SHEET APPLY TO THIS HIGH BAY AREA

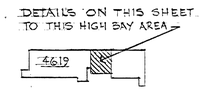

KEY PLAN NO SCALE

NORTH

REV.	BY	DATE	REVISION	C.I. NO.	APPROVED
1	JWT	9/08/78	CHANGED INSULATION THICKNESS & DETAILS	–	

NATIONAL AERONAUTICS AND SPACE ADMINISTRATION
MARSHALL SPACE FLIGHT CENTER HUNTSVILLE, ALABAMA
METRO CONTRACT SERVICES

REHABILITATION OF BUILDING 4619
PHASE I
INSULATE INTERIOR WALLS - DETAILS LOAD TEST ANNEX BLDG

NASA AE CONTRACT NO. NAS-8-31028 MOD-37 AMP: TD 279.1 WR 129-4708-116-77 | FILE NO. MSFC 11822-AC

SUBMITTED: C.A. Holmes by J.C. Spillman AE DATE: 20 JUNE 1978
APPROVAL RECOMMENDED: LAB: DATE: 7/11/78
APPROVED: CHIEF ENGINEERING DIVISION NASA DATE: 7/31/78

REF. NO. AC
DESIGNED BOZEMAN
DRAWN BOZEMAN
CHECKED SIMSON
SCALE 3"=1'-0"
APPROVAL RECOMMENDED: CHIEF, ARCHITECTURAL BRANCH
DESIGN DATE: 6-20-78
SPEC. NO. SAC. 1809
DWG NO. SAC-AY-4619-AC

TELECOMMUNICATIONS EQUIPMENT AFFECTED BY THIS CONTRACT WORK IS NOT TO BE ALTERED OR REMOVED BY THE CONTRACTOR. CONTACT THE COR IN THE EVENT OF A CONFLICT.

SIGNATURE OFFICE SYMBOL DATE

Ben Bayley CS21 6/23/78

Richard McStick ASD1-M 6-22-78

MSFC MASTER BID DISK 11-18-2013

MCS DWG E-SKA-2112

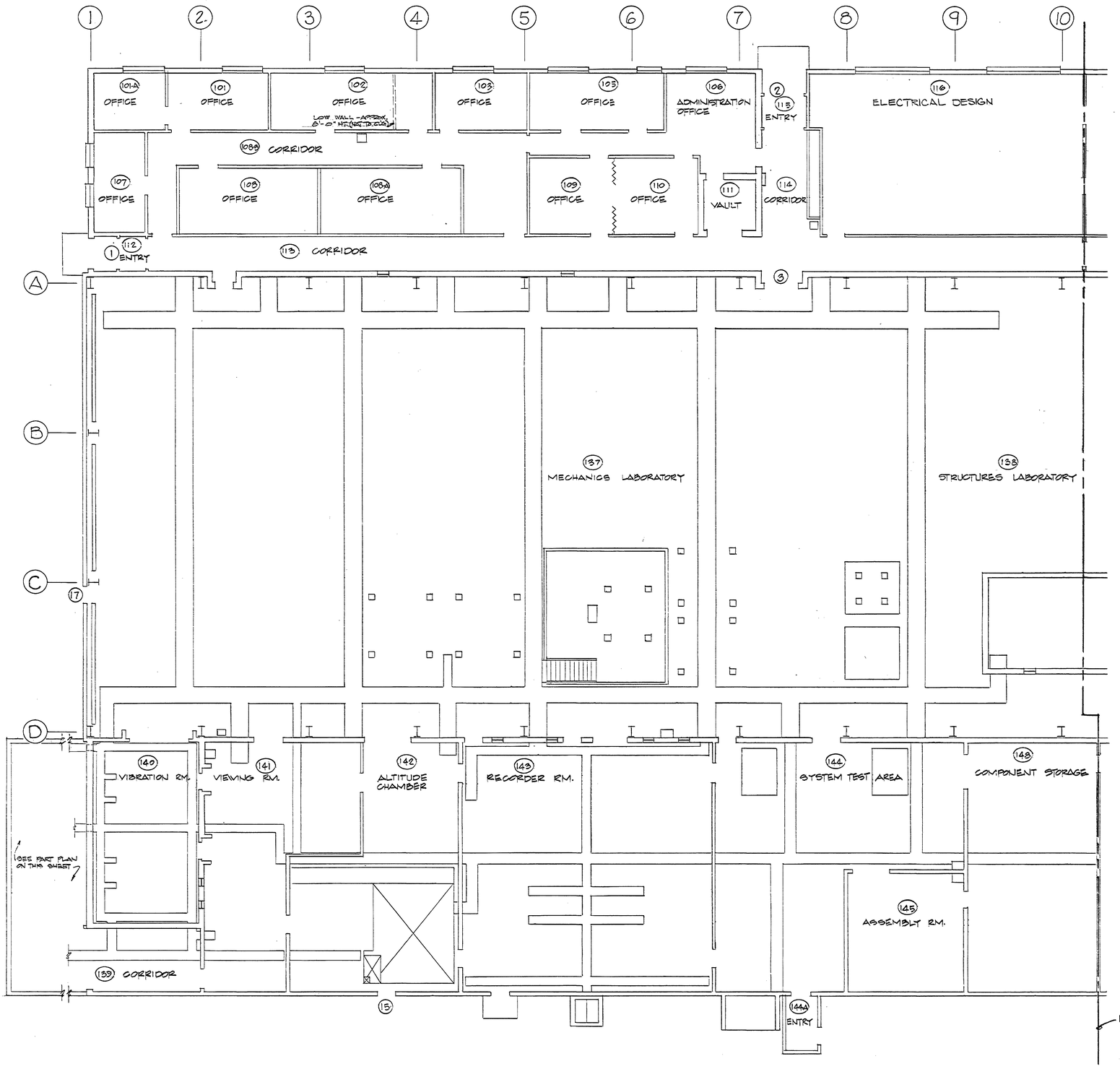

FLOOR PLAN - WEST END
SCALE 1/8" = 1'-0"

Ben Bagley C121
JAN 16, 78

GENERAL NOTES:

1. CONTRACTOR SHALL VERIFY EXISTING FIELD CONDITIONS BEFORE BEGINING WORK.
2. REMOVE VINYL ASBESTOS TILE IN ALL SPACES TO RECEIVE NEW TILE. CONC. SLAB SHALL BE TREATED AS SPECIFIED BEFORE INSTALLING NEW TILE.
3. REMOVE EXISTING ACOUSTICAL TILE CEILING AND SUSPENSION SYSTEM IN ALL SPACES WHICH RECEIVE NEW TILE CEILING.
4. ALL AREAS WHICH ARE NOTED TO RECEIVE FULL CEMENT ASBESTOS PANELS SHALL USE EXISTING REMOVED PANELS.
5. NEW CEMENT ASBESTOS PANELS SHALL BE PAINTED TO MATCH EXISTING PANELS.
6. NEW CEMENT ASBESTOS PANELS SHALL MATCH EXISTING IN SIZE, SHAPE, AND TEXTURE.
7. REFLECTED CEILING PLANS SHOW QUANTITIES OF SPRINKLER HEADS, ETC. CONTRACTOR SHALL VERIFY EXISTING LOCATION BEFORE BEGINNING INSTALLATION.
8. EXISTING V.A.T. FLOORING THAT REMAINS SHALL BE STRIPPED OF OLD WAX FINISH, THOROUGHLY RINSED WITH CLEAN WATER & SHALL HAVE A THIN COAT OF NEW FLOOR POLISH APPLIED.
9. REMOVE DAMAGED FLOOR TILES (APPROX. 100-150) WHICH ARE CRACKED, LOOSE, BROKEN, DENTED, ETC. IN AREAS LISTED UNDER THE REPAIR PORTION OF THE FINISH SCHEDULE. REPLACE THESE TILES WITH NEW TILE - COLOR SELECTED BY NASA ARCHITECT. REPLACE MISSING BASE (APPROX. 20') AND MOLDED CORNERS (APPROX. 20') IN AREAS LISTED UNDER THE REPAIR PORTION OF THE FINISH SCHEDULE. BASE AND CORNERS SHALL MATCH EXISTING IN SIZE AND COLOR. CONTRACTOR SHALL CHECK THE ABOVE AREAS PLUS THE AREAS NOT LISTED FOR EITHER NEW OR REPAIR WORK TO VERIFY THE AMOUNT OF TILE, BASE & CORNERS NEEDED. INSTALL REPAIR WORK IN SAME MANNER AS SPECIFIED FOR NEW WORK.

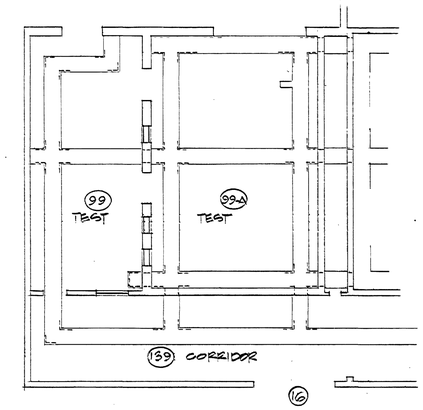

PART PLAN
SCALE: 1/8" = 1'-0"

10. ROOM 157 (MEN'S LOCKER ETC.)
   a.) REMOVE & REPLACE SUCH DEFECTIVE PLASTER WITH PORTLAND CEMENT PLASTER OF 7/8" (INCH) MIN. THICKNESS.
   b.) APPLY IN THREE (3) APPLICATIONS WITH 1/8" (INCH) FINISH COAT.
   c.) MATCH TECHNIQUE AND COLOR OF PATCH WORK TO EXISTING WORK.
   d.) PAINT ENTIRE PLASTER SURFACED AREAS WITH ONE (1) COAT OF FAST-DRI LATEX WALL PRIMER AND FINISH WITH TILE-CLAD II EPOXY ENAMEL. COLORS BY NASA ARCHITECT.
11. PAINT THE FOLLOWING INTERIOR AREAS: AREA 101 THRU 130 PLUS OTHER AREAS CALLED FOR ON DRAWINGS AND/OR SPECIFIED. INTERIOR SURFACES INCLUDE WALLS, DOORS & FRAMES, JR. PARTITIONS, TOILET PARTITIONS, SHELVING, WINDOWS & FRAMES, ETC.

TELECOMMUNICATIONS EQUIPMENT AFFECTED BY THIS CONTRACT WORK IS NOT TO BE ALTERED OR REMOVED BY THE CONTRACTOR. CONTACT THE COR IN THE EVENT OF A CONFLICT.

SIGNATURE — OFFICE SYMBOL — DATE

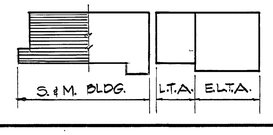

REV.	BY	DATE	REVISION	C.I. NO.	APPROVED

NATIONAL AERONAUTICS AND SPACE ADMINISTRATION
MARSHALL SPACE FLIGHT CENTER HUNTSVILLE, ALABAMA
SMITH SECKMAN REID, INC.

REHABILATATION OF STRUCTURES & MECHANICS LAB BUILDING 4619 - PHASE 1 FLOOR PLAN - WEST S&M BLDG.

NASA AE CONTRACT NO. NAS8-32449
FILE NO. MSFC 11815

SUBMITTED: Roger A. Allen — AE: DATE: 1-4-78
APPROVAL RECOMMENDED: E.A. Berger — LAB: DATE: 2-21-78
APPROVED: Chief, Engineering Division — NASA: DATE: 7/31/78

DESIGNED D.B.
DRAWN D.B.
CHECKED E.G
SCALE: SHOWN
APPROVAL RECOMMENDED: Chief, Tech. Services Branch
DESIGN DATE:
SPEC. NO. FAC-1805

REF. NO. A1
DWG NO. FAC-AY-4619-A1

MSFC MASTER BID DISK 11-18-2013

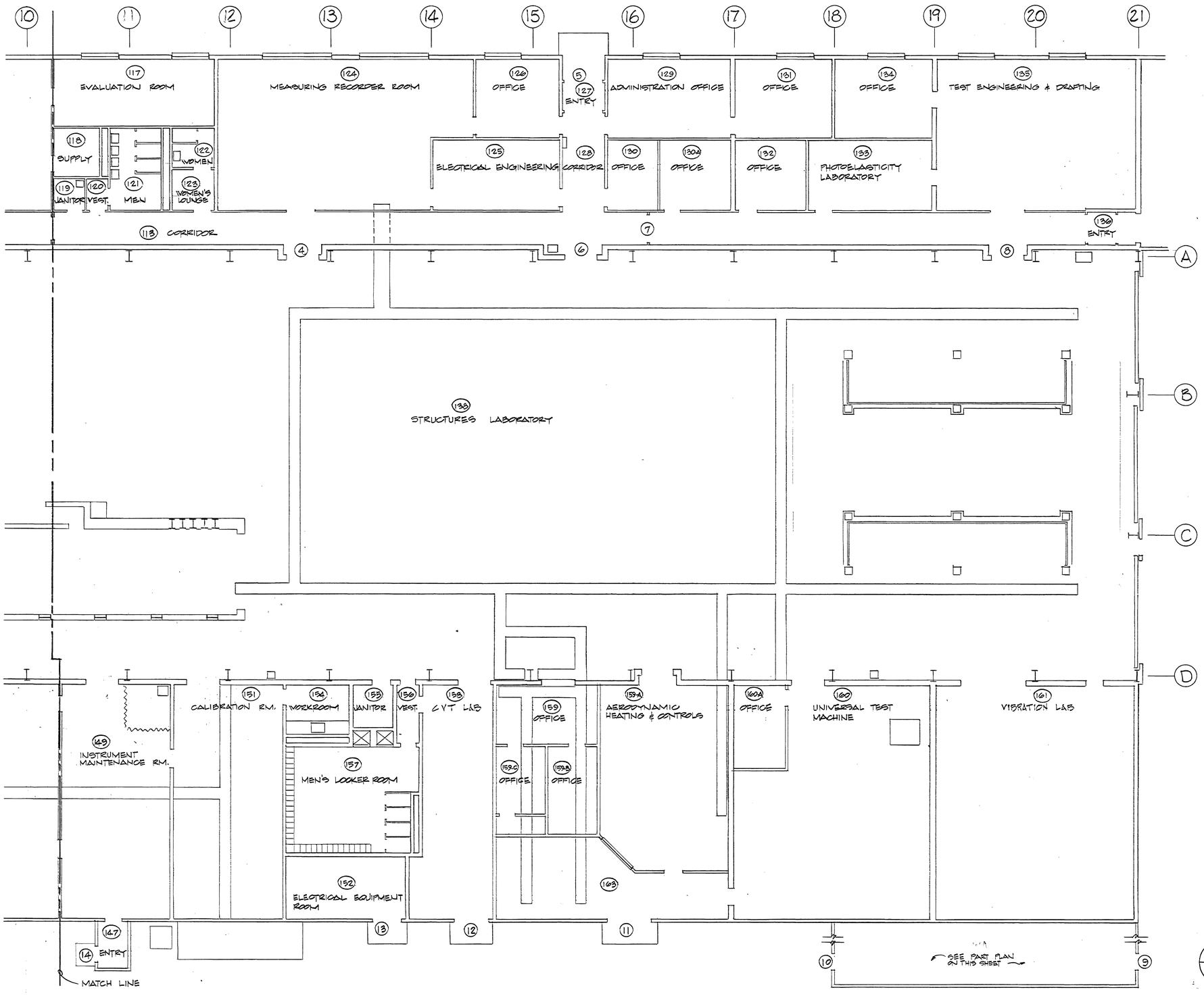

PART PLAN
SCALE: 1/8"=1'-0"

REV.	BY	DATE	REVISION	C.I. NO.	APPROVED

NATIONAL AERONAUTICS AND SPACE ADMINISTRATION
MARSHALL SPACE FLIGHT CENTER HUNTSVILLE, ALABAMA
SMITH SECKMAN REID, INC.

REHABILATATION OF STRUCTURES & MECHANICS LAB BUILDING 4619 - PHASE 1 FLOOR PLAN - EAST S&M BLDG.

NASA AE CONTRACT NO. NAS8-32449
FILE NO. MSFC 11816

SUBMITTED: Roger R. Chen AE: DATE: 1-4-78
APPROVAL RECOMMENDED: E.A. Bergen LAB: DATE: 2-21-78
APPROVED: C.J. Dennison CHIEF ENGINEERING DIVISION NASA: DATE: 7/31/78
DESIGNED D.B.
DRAWN D.B.
CHECKED E.G.
SCALE: SHOWN
APPROVAL RECOMMENDED: Fred Thomas CHIEF, ARCHITECTURAL BRANCH
DIVISION DATE:
SPEC. NO. FAC-1805
DWG NO. FAC-AY-4619-A2

REF. NO. A2

TELECOMMUNICATIONS EQUIPMENT AFFECTED BY THIS CONTRACT WORK IS NOT TO BE ALTERED OR REMOVED BY THE CONTRACTOR. CONTACT THE COR IN THE EVENT OF A CONFLICT.
SIGNATURE OFFICE SYMBOL DATE 2/16/78

FLOOR PLAN - EAST END
SCALE 1/8"=1'-0"

Ben Bayless CS21 from 16,1924

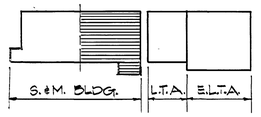

MSFC - FORM 435 REV. 7-71

MSFC MASTER BID DISK 11-18-2013

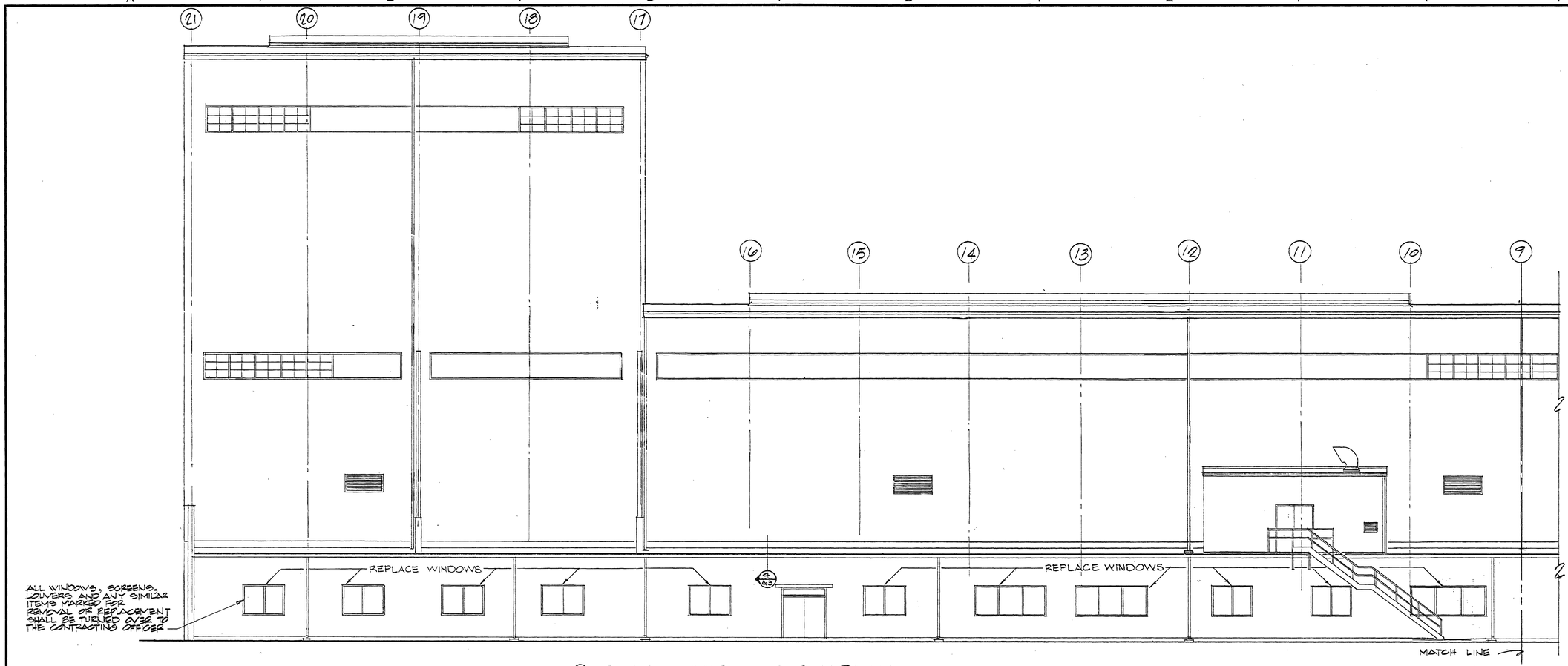

① PART NORTH ELEVATION (EXISTING)
SCALE: 1/8" = 1'-0"

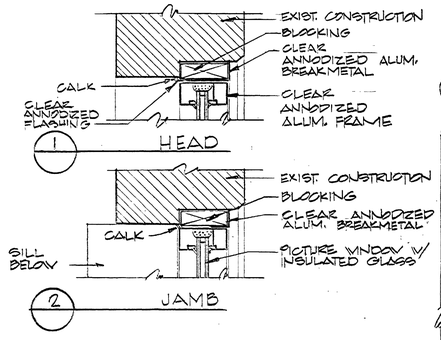

WINDOW DETAILS
SCALE: 3" = 1'-0"

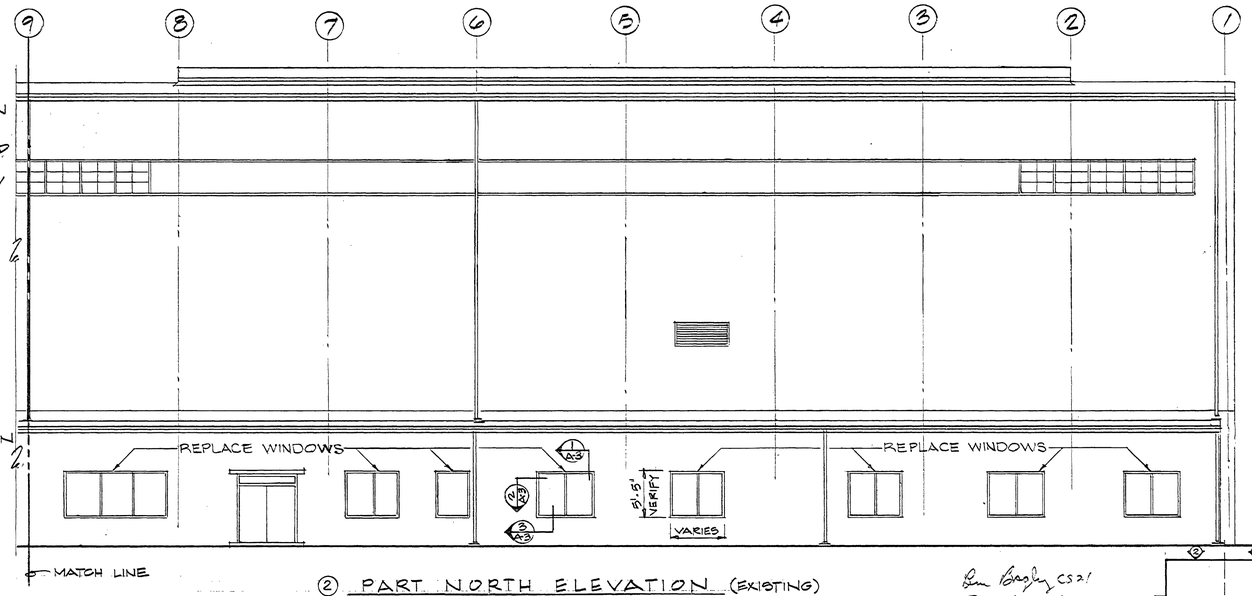

② PART NORTH ELEVATION (EXISTING)
SCALE: 1/8" = 1'-0"

TELECOMMUNICATIONS EQUIPMENT AFFECTED BY THIS CONTRACT WORK IS NOT TO BE ALTERED OR REMOVED BY THE CONTRACTOR. CONTACT THE COR IN THE EVENT OF A CONFLICT.

SIGNATURE OFFICE SYMBOL DATE

Ron Bagley CS21 Jan 16, 1978

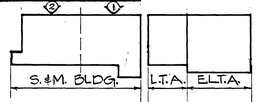

REV.	BY	DATE	REVISION	C.I. NO.	APPROVED

NATIONAL AERONAUTICS AND SPACE ADMINISTRATION
MARSHALL SPACE FLIGHT CENTER HUNTSVILLE, ALABAMA
SMITH SECKMAN REID, INC.

REHABILITATION OF
STRUCTURES & MECHANICS LAB
BUILDING 4619 - PHASE 1
NORTH ELEVATIONS - S & M BLDG.

NASA AE CONTRACT NO. NAS8-32449
FILE NO. MSFC 11817

SUBMITTED: Roger R. Chase
AE: DATE: 1-4-78
APPROVAL RECOMMENDED: E. H. Seaman
LAB: DATE: 2-22-78
APPROVED: E. Dennison
NASA: DATE: 7/31/78

REF. NO. A3
DESIGNED D.B.
DRAWN D.B.
CHECKED E.G.
SCALE: SHOWN
APPROVAL RECOMMENDED: Peter Wilmin
CHIEF, ARCHITECTURAL BRANCH
DESIGN DATE:
SPEC. NO. FAC-1805
DWG NO. FAC-AY-4619-A3

MSFC MASTER BID DISK 11-18-2013

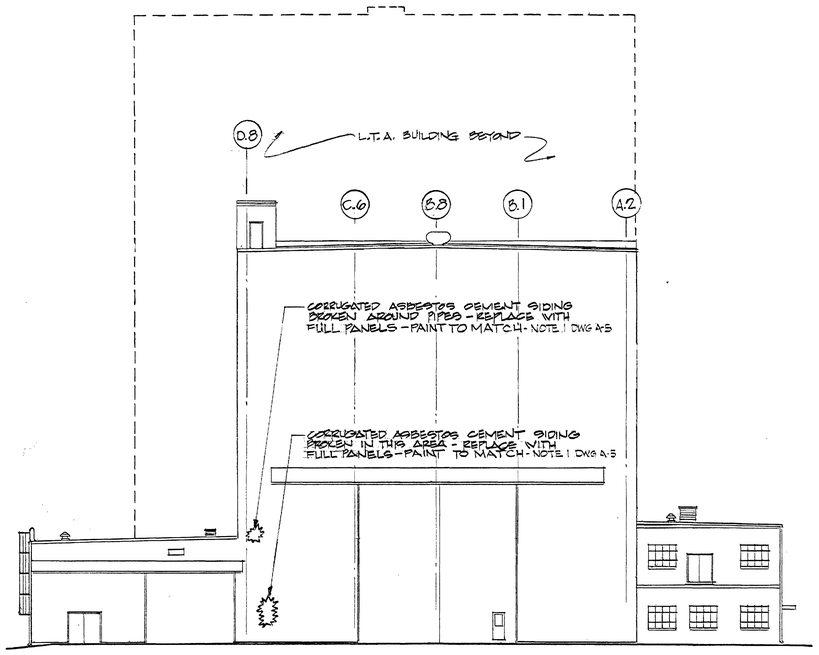

⑤ EAST ELEVATION E.L.T.A.
SCALE: 1/16" = 1'-0"

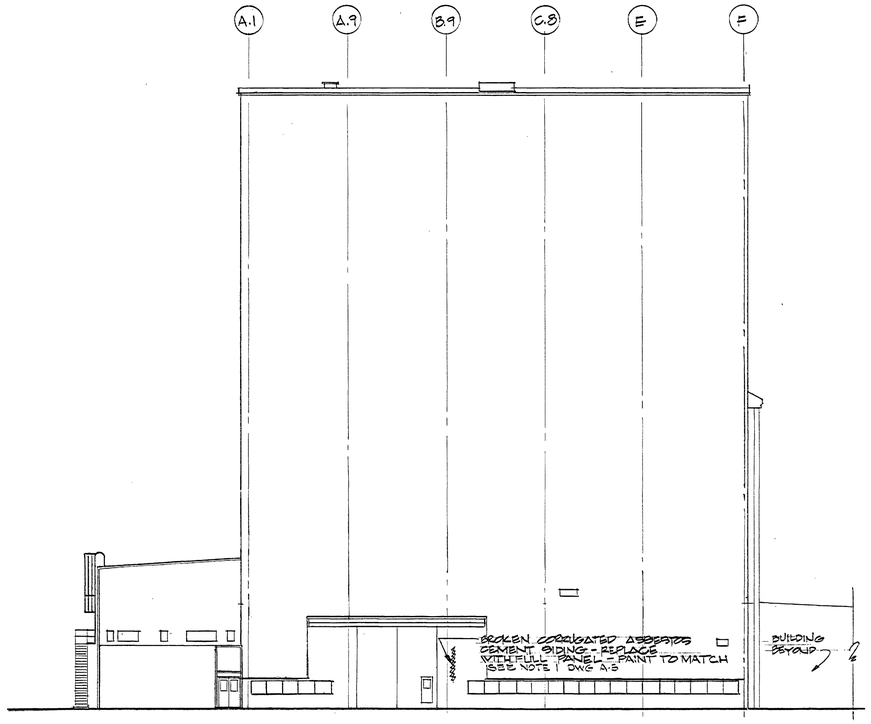

⑥ WEST ELEVATION L.T.A.
SCALE: 1/16" = 1'-0"

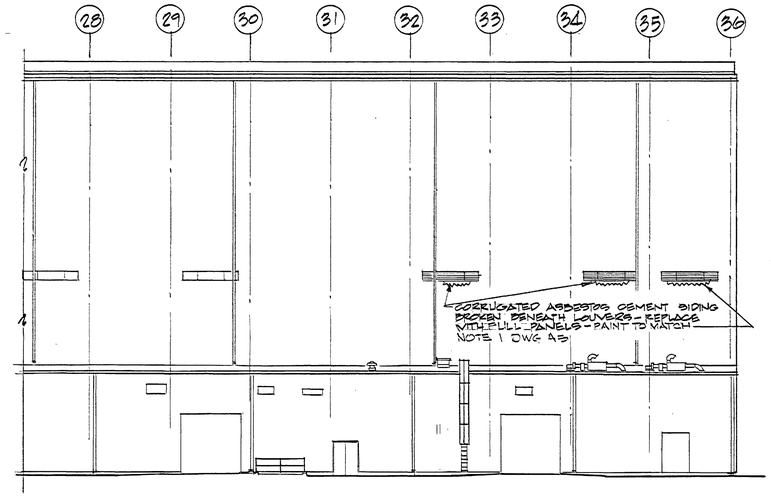

⑦ SOUTH ELEVATION E.L.T.A
SCALE: 1/16" = 1'-0"

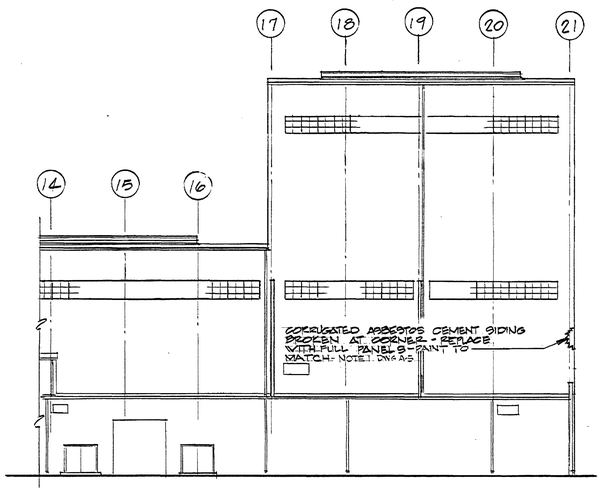

⑧ PART SOUTH ELEVATION S&M
SCALE: 1/16" = 1'-0"

FINISH SCHEDULE		NEW WORK			REPAIRS (SEE NOTE 3)	
SPACE NO.	SPACE NAME	AC. TILE	V.A. TILE	VINYL BASE	V.A. TILE	VINYL BASE
101	OFFICE	●				●
101A	OFFICE	●				
102	OFFICE	●				
103	OFFICE	●				
105	OFFICE	●				
106	ADMINISTRATION OFF.	●			●	●
107	OFFICE	●			●	
108	OFFICE	●				
108A	OFFICE	●				
108B	CORRIDOR	●			●	
109	OFFICE	●				
110	OFFICE	●				
111	VAULT					
112	ENTRY					
113	CORRIDOR	●			●	●
114	CORRIDOR	●			●	●
115	ENTRY				●	
116	ELECTRICAL DESIGN	●	●	●		
117	EVALUATION ROOM	●	●	●		
118	SUPPLY	●	●	●		
119	JANITOR					
120	VESTIBULE					
121	MEN TOILET					
122	WOMEN TOILET					
123	WOMEN LOUNGE					
124	MEASURING REC'D ROOM	●	●	●		
125	ELECTRICAL ENGINEER'S	●	●	●		
126	OFFICE	●	●	●		
127	ENTRY					
128	CORRIDOR	●	●	●		
129	ADMINISTRATION OFF.	●				
130	OFFICE	●				
130A	OFFICE	●				
131	OFFICE	●				
132	OFFICE	●				
133	PIEZOELECTRICITY LAB.	●			●	
134	OFFICE	●				
135	TEST ENGINEERING	●	●	●	●	
136	ENTRY					
143	ASSEMBLY ROOM	●	●	●		

ADDITIONAL SPACE NOS TO RECEIVE ACOUSTICAL CEILING TILE: 99, 141, 143, 149, 151, 152, 154, 158, 159, 159-B, 159-C, 160, 163.

DOOR SCHEDULE

DOOR NO.	DOOR SIZE	HARDWARE: POSITIVE LAT. DEVICE	CO-ORDINATOR	ASTRAGAL	CARRY BAR	STRIKE	REMOVE LOCK	WEATHERSTRIP	TEMPERED GLASS	APPROX. SQ. FT. OF TEMPERED GLASS	REPLACE EXISTING W/ INSUL. DOOR
1	PR. 2'8"x7'0" 1/2 GLASS							●	●	12	
2	PR. 3'0"x7'0" FULL GLASS							●	●	36	
3	EXIST.	●	●	●	●	●					
4	"	●	●	●	●	●					
5	PR. 3'0"x7'0" FULL GLASS							●	●	36	
6	EXIST.	●	●	●	●	●					
7	"						●				
8	"	●	●	●	●	●					
9	3'0"x7'0" 1/2 GLASS							●	●	6	
10	3'0"x7'0" 1/2 GLASS							●	●	6	
11	PR. 4'0"x7'0" 1/2 GLASS							●	●	18	●
12	PR. 3'0"x7'0" 1/2 GLASS							●	●	12	
13	PR. 2'8"x7'0" SOLID							●			●
14	3'0"x7'0" 1/2 GLASS							●	●	6	
15	3'0"x7'0" SOLID							●			●
16	PR. 5'0"x7'0" SOLID							●			
17	3'0"x7'0" 1/2 GLASS							●	●	6	●

REV.	BY	DATE	REVISION	C.I. NO.	APPROVED

NATIONAL AERONAUTICS AND SPACE ADMINISTRATION
MARSHALL SPACE FLIGHT CENTER HUNTSVILLE, ALABAMA
SMITH SECKMAN REID, INC.

REHABILATATION OF
STRUCTURES & MECHANICS LAB
BUILDING 4619 - PHASE 1
ELEVATIONS & SCHEDULES

NASA AE CONTRACT NO. NAS8-32449 | FILE NO. MSFC 11818

SUBMITTED: Kaya R. Cline AE: DATE: 1-4-78
APPROVAL RECOMMENDED: LAB: DATE: 3-1-78
APPROVED: CHIEF ENGINEERING DIVISION NASA: DATE: 7/31/78

REF. NO. A4
DESIGNED D.B. DRAWN D.B. CHECKED E.G.
SCALE: SHOWN
APPROVAL RECOMMENDED: CHIEF, ARCHITECTURAL BRANCH
DESIGN DATE:
SPEC. NO. FAC-1805
DWG NO. FAC-AY-4619-A4

TELECOMMUNICATIONS EQUIPMENT AFFECTED BY THIS CONTRACT WORK IS NOT TO BE ALTERED OR REMOVED BY THE CONTRACTOR. CONTACT THE COR IN THE EVENT OF A CONFLICT.
SIGNATURE OFFICE SYMBOL DATE 2/12/79

Ben Bayley CS21 JAN 26, 1978

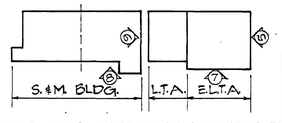

MSFC-FORM 232 REV. 2-71)

MSFC MASTER BID DISK 11-18-2013

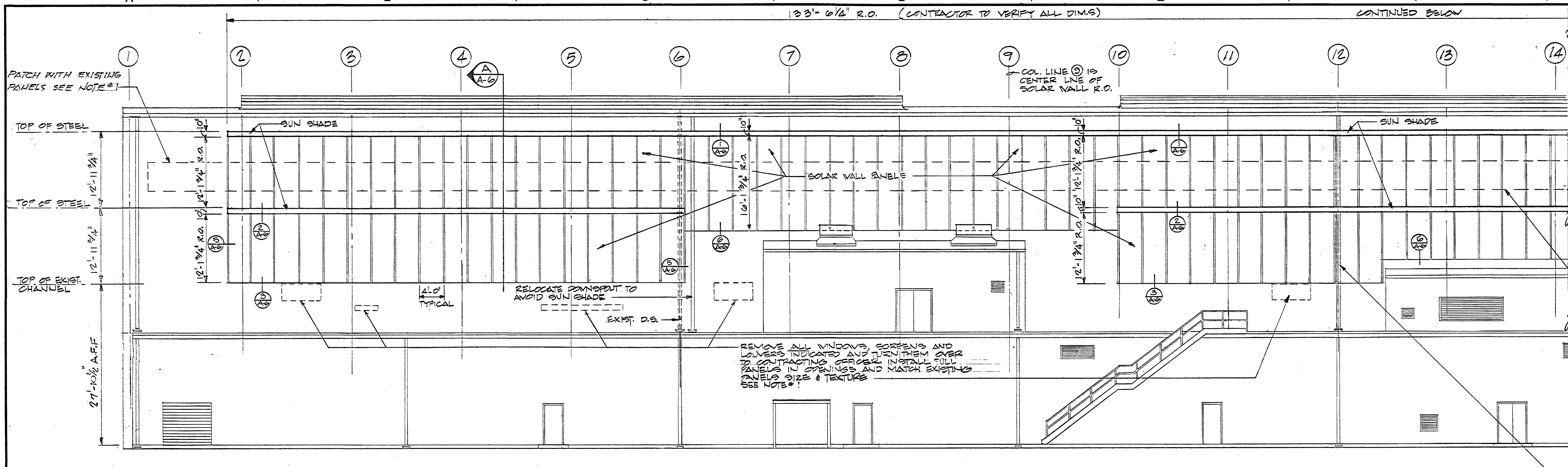

③ PART SOUTH ELEVATION (EXISTING)
SCALE: 1/8" = 1'0"

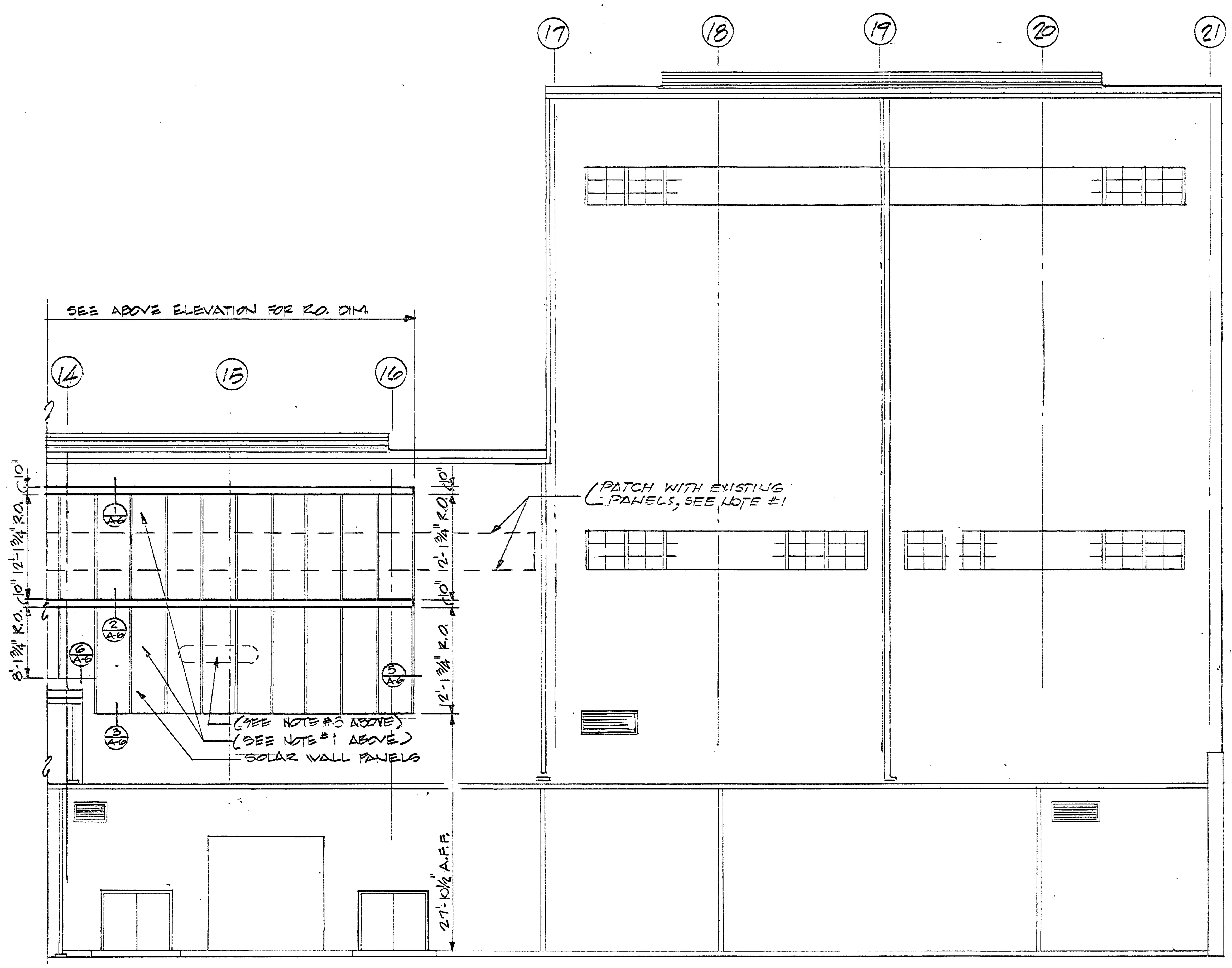

④ PART SOUTH ELEVATION (EXISTING)
SCALE: 1/8" = 1'0"

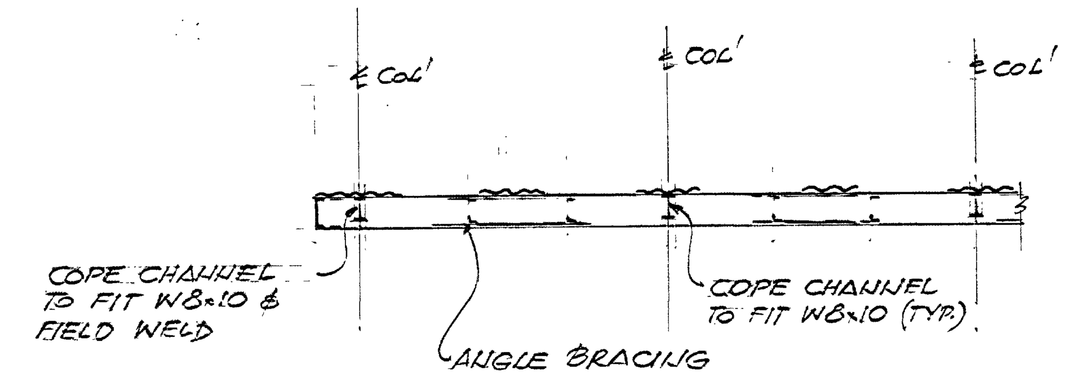

ELEVATION OF CHANNEL CLOSURE BETWEEN SOLAR PANELS

NOTE #1

EXISTING WINDOWS SHOWN DASHED SHALL BE REMOVED AND TURNED OVER TO THE CONTRACTING OFFICER. REMOVE EXIST. CEMENT ASBESTOS PANELS WHERE NEW SOLAR WALL PANELS ARE SHOWN INSTALLED. REUSE REMOVED C.A. PANELS TO REPLACE DAMAGED PANELS & TO COVER ALL OPENINGS WHICH REQUIRE CLOSURE. SEE DWG A-4 FOR OTHER LOCATIONS INCLUDED IN BASE BID.

NOTE #2

ALL DOWNSPOUTS, PIPING, ETC. REMOVED DURING INSTALLATION OF SOLAR WALL PANELS SHALL BE LATERALLY SUPPORTED AS REQUIRED. CONSULT MANUFACTURER FOR APPROVED METHOD OF SUPPORT.

NOTE #3

CONTRACTOR SHALL INSTALL SOLAR WALL AROUND DUCT WORK WHICH CANNOT BE RELOCATED.

NOTE #4

CONTRACTOR SHALL BE RESPONSIBLE FOR PROTECTION OF EXISTING CEM. ASBESTOS PANELS AGAINST DAMAGE DURING CONSTRUCTION PRIOR TO INSTALLATION OF NEW SOLAR PANELS.

NOTE #5

ALL NEW EXTERIOR & INTERIOR STRUCTURAL STEEL MEMBERS (ANGLES, CHANNELS, BEAMS & ASSOCIATED ITEMS) SHOWN ON DWG'S &/OR CALLED FOR IN SPEC. WHICH ARE PART OF SOLAR WALL SYSTEM & SUN SHADE SYSTEM SHALL BE GIVEN ONE (1) PRIME COAT & TWO (2) FINISH COATS. SEE SPECS. SUN SHADE ROOF DECK (GALV.) SHALL BE PAINTED SEE SPEC. - PAINTING, GEN.

TELECOMMUNICATIONS EQUIPMENT AFFECTED BY THIS CONTRACT WORK IS NOT TO BE ALTERED OR REMOVED BY THE CONTRACTOR. CONTACT THE COR IN THE EVENT OF A CONFLICT.

SIGNATURE — OFFICE SYMBOL — DATE 2/13/78

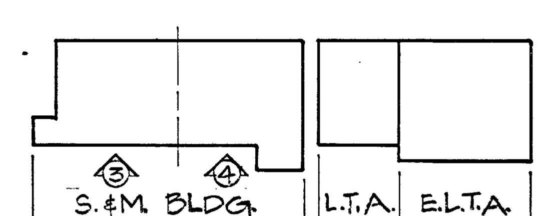

REV.	BY	DATE	REVISION	C.I. NO.	APPROVED

NATIONAL AERONAUTICS AND SPACE ADMINISTRATION
MARSHALL SPACE FLIGHT CENTER — HUNTSVILLE, ALABAMA

SMITH SECKMAN REID, INC.

REHABILATATION OF STRUCTURES & MECHANICS LAB
BUILDING 4619 - PHASE 1
SOUTH ELEVATION - S & M BLDG.
PASSIVE SOLAR SYSTEM

NASA AE CONTRACT NO. NAS8-32449		FILE NO. MSFC 11819	
SUBMITTED: [signature]	APPROVAL RECOMMENDED: [signature]	APPROVED: [signature] CHIEF ENGINEERING DIVISION	
AE: DATE: 1-4-78	LAB: DATE: 7/26/78	NASA DATE: 7/31/78	
DESIGNED D.B. DRAWN D.B. CHECKED E.G.	APPROVAL RECOMMENDED: CHIEF, STRUCT'L BRANCH	DWG NO.	
SCALE: SHOWN	DESIGN DATE: 4-13-78	FAC-AY-4619-A5	
	SPEC. NO.		

REF. NO. A5

MSFC MASTER BID DISK 11-18-2013

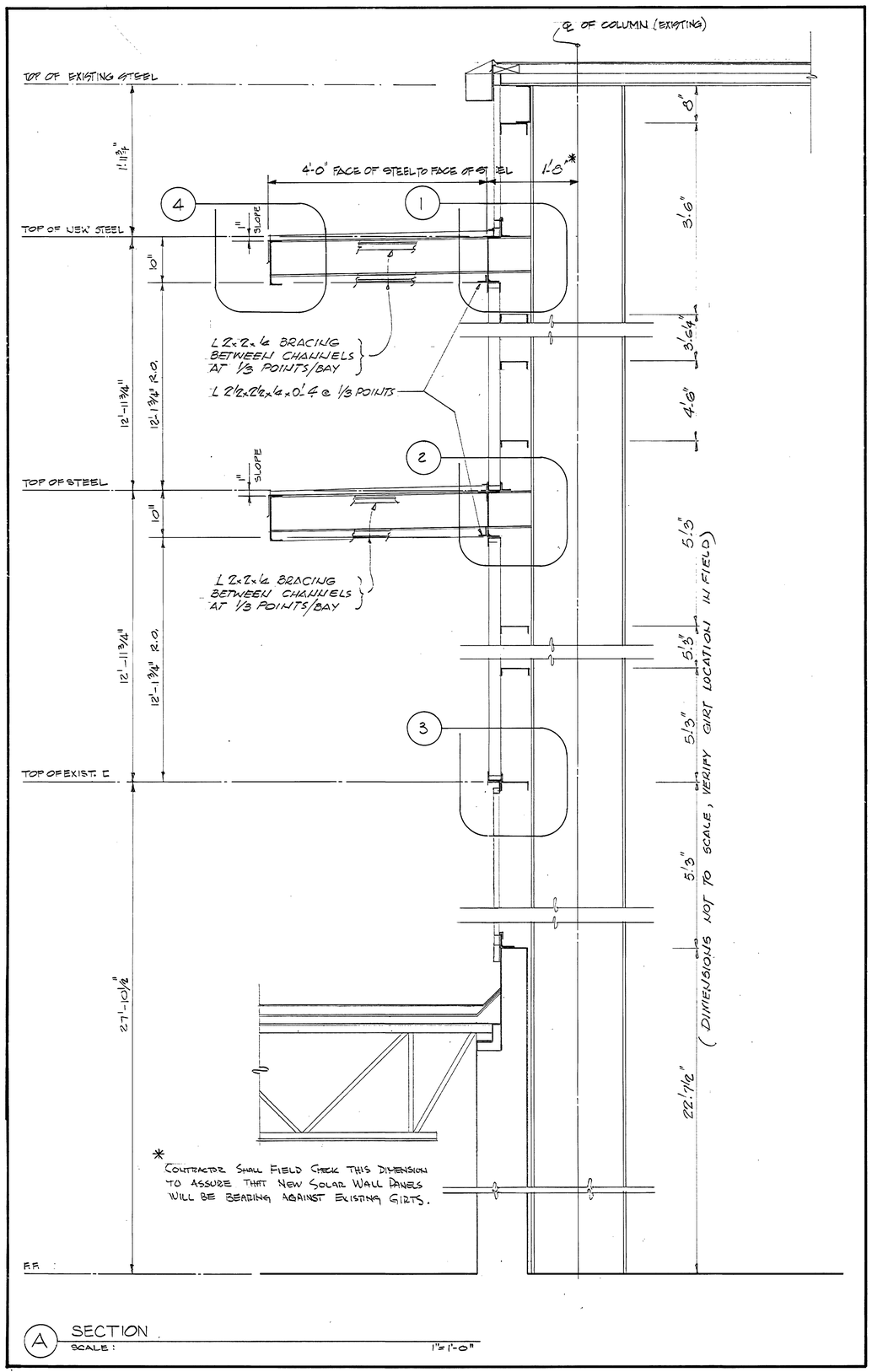

A SECTION
SCALE: 1"=1'-0"

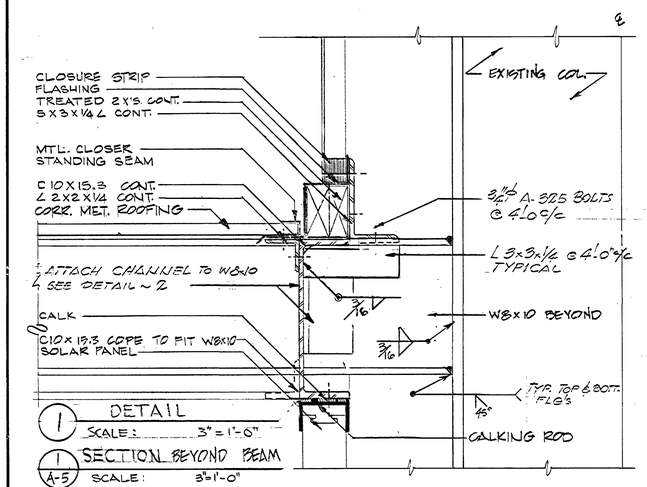

1 DETAIL
SCALE: 3"=1'-0"

1 / A-5 SECTION BEYOND BEAM
SCALE: 3"=1'-0"

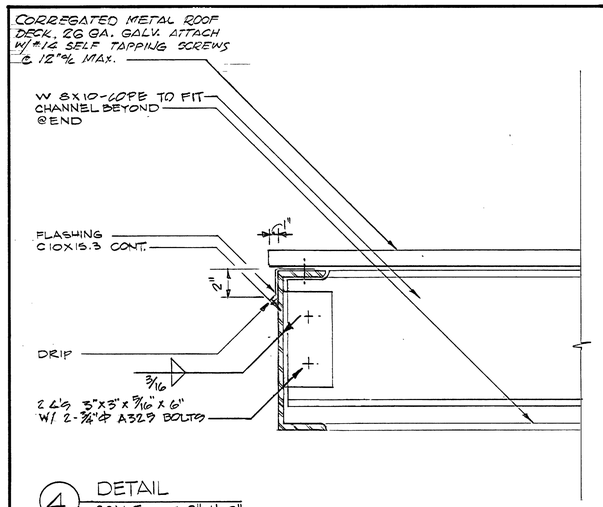

4 DETAIL
SCALE 3"=1'-0"

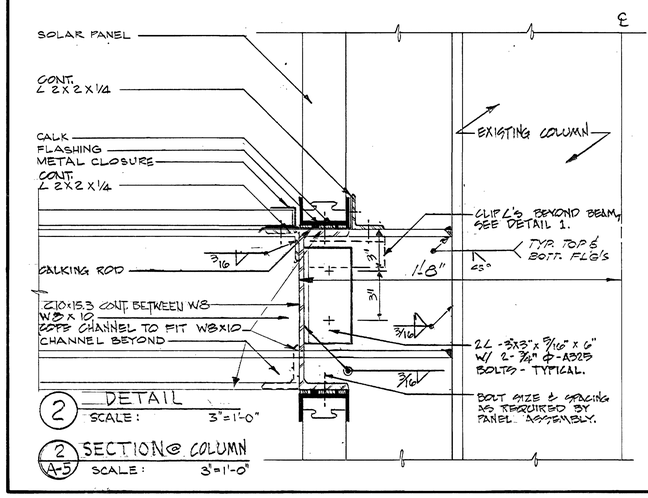

2 DETAIL
SCALE: 3"=1'-0"

2 / A-5 SECTION @ COLUMN
SCALE: 3"=1'-0"

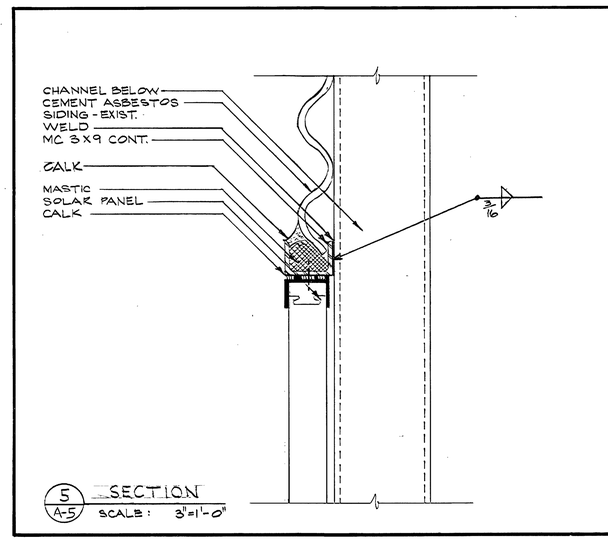

5 / A-5 SECTION
SCALE: 3"=1'-0"

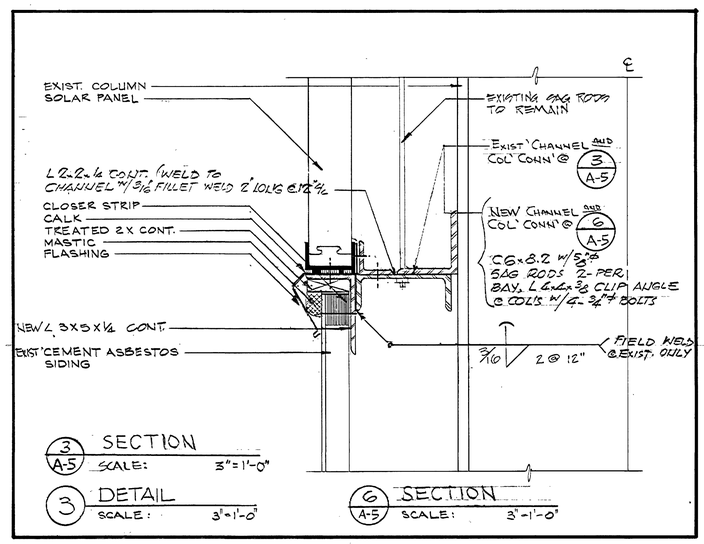

3 / A-5 SECTION
SCALE: 3"=1'-0"

3 DETAIL
SCALE: 3"=1'-0"

6 / A-5 SECTION
SCALE: 3"=1'-0"

GENERAL NOTES - STEEL

1. STRUCTURAL STEEL SHALL BE A-36 GRADE
2. STRUCTURAL STEEL FABRICATION AND ERECTION SHALL BE IN ACCORDANCE WITH THE LATEST A.I.S.C. SPECIFICATIONS AND STANDARDS. WELDING SHALL CONFORM TO AWS D1.1
3. BOLTED FIELD CONNECTIONS SHALL BE FRICTION TYPE W/ ¾" ϕ A325 BOLTS & DIRECT TENSION LOAD INDICATORS.
4. SOLAR PANELS SHALL BE FASTENED TO GIRTS & WITHSTAND A WIND PRESSURE OF 25 P.S.F. SHOP DRAWINGS SHALL BE SUBMITTED FOR REVIEW SHOWING THE FASTENING DETAILS.

REV.	BY	DATE	REVISION	C.I. NO.	APPROVED

TELECOMMUNICATIONS EQUIPMENT AFFECTED BY THIS CONTRACT WORK IS NOT TO BE ALTERED OR REMOVED BY THE CONTRACTOR. CONTACT THE COR IN THE EVENT OF A CONFLICT.

SIGNATURE / OFFICE SYMBOL / DATE

Ben Boyd 1/16/1978

NATIONAL AERONAUTICS AND SPACE ADMINISTRATION
MARSHALL SPACE FLIGHT CENTER HUNTSVILLE, ALABAMA
SMITH SECKMAN REID, INC.

REHABILITATION OF STRUCTURES & MECHANICS LAB
BUILDING 4619 - PHASE 1
DETAILS - S & M BLDG. PASSIVE SOLAR SYSTEM

NASA AE CONTRACT NO. NAS8-32449			FILE NO. MSFC 11820
SUBMITTED: Kyle K. Cline AE: DATE: 1-4-78	APPROVAL RECOMMENDED: LAB: DATE: 7/26/78		APPROVED: CHIEF ENGINEERING DIVISION NASA DATE: 7/31/78
REF. NO. A6	DESIGNED D.B. DRAWN D.B. CHECKED E.G. SCALE: SHOWN	APPROVAL RECOMMENDED: CHIEF, STRUCTURES BRANCH DESIGN DATE: 4/13/78 SPEC. NO.	DWG NO. FAC-AY-4619-A6

MSFC MASTER BID DISK 11-18-2013

LEGEND

- 2x2 LAY-IN ACOUSTICAL TILE
- EXISTING CONSTRUCTION
- EXPOSED CONSTRUCTION (D)
- RECESSED LIGHT FIXTURE
- SURFACE MTD. LIGHT FIXTURE
- INDUSTRIAL LIGHT FIXTURE
- EXIT LIGHT
- SPEAKER (EXIST.) (S)
- SPRINKLER HEAD (EXIST.)
- SMOKE DETECTOR (EXIST.)
- SUPPLY DIFFUSER SEE MECH.
- EXHAUST GRILLE SEE MECH.

NOTE: INSTALL ALL CLG. TILES W/ RESTRAINING CLIPS AND INSULATE ABOVE RECESSED LIGHT.

CEILING HEIGHTS

- 8'-6" (A)
- 10'-0" (B)
- MATCH EXISTING (C)
- EXPOSED (D)

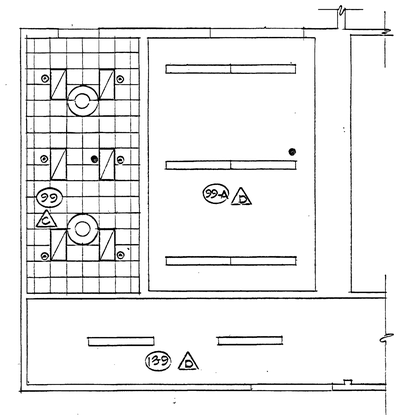

PART PLAN
SCALE: 1/8"=1'-0"

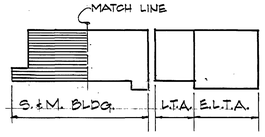

TELECOMMUNICATIONS EQUIPMENT AFFECTED BY THIS CONTRACT WORK IS NOT TO BE ALTERED OR REMOVED BY THE CONTRACTOR. CONTACT THE COR IN THE EVENT OF A CONFLICT.

SIGNATURE _____ OFFICE SYMBOL _____ DATE 2/16/78

CEILING PLAN - WEST END
SCALE 1/8"= 1'-0"

Ben Bagley CS21
for 1/6/1978

REV.	BY	DATE	REVISION	C.I. NO.	APPROVED

NATIONAL AERONAUTICS AND SPACE ADMINISTRATION
MARSHALL SPACE FLIGHT CENTER HUNTSVILLE, ALABAMA

SMITH SECKMAN REID, INC.

REHABILATATION OF
STRUCTURES & MECHANICS LAB
BUILDING 4619 - PHASE 1
CEILING PLAN - WEST S & M BLDG.

NASA AE CONTRACT NO. NAS8-32449		FILE NO. MSFC 11821
SUBMITTED: Kyle R. Cline	APPROVAL RECOMMENDED:	APPROVED: CHIEF ENGINEERING DIVISION
AE: DATE: 1-4-78	LAB: DATE: 3-27-78	NASA DATE: 7/31/78
REF. NO. A7	DESIGNED D.B. DRAWN D.B. CHECKED E.G. SCALE: SHOWN	APPROVAL RECOMMENDED: CHIEF BRANCH DESIGN DATE: SPEC. NO.
		DWG NO. FAC-AY-4619-A7

MSFC MASTER BID DISK 11-18-2013

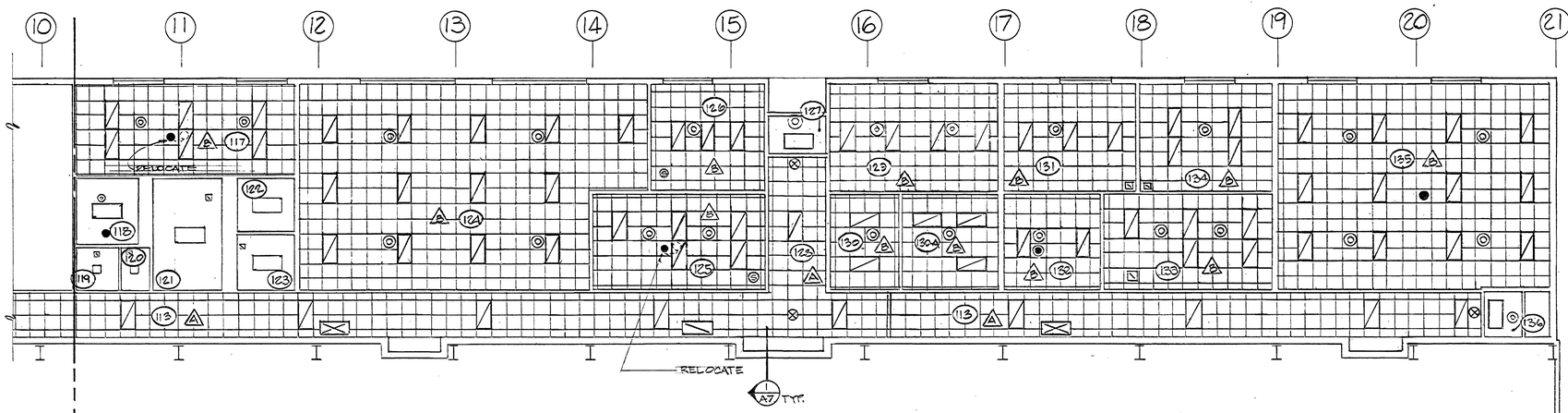

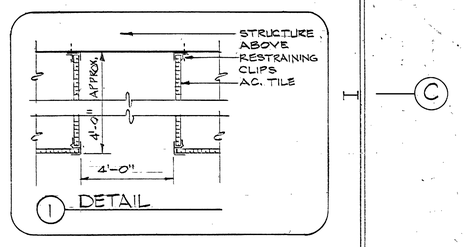

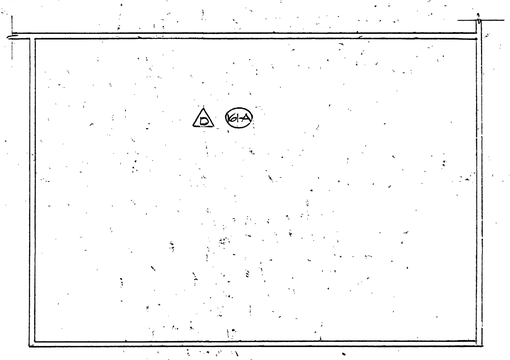

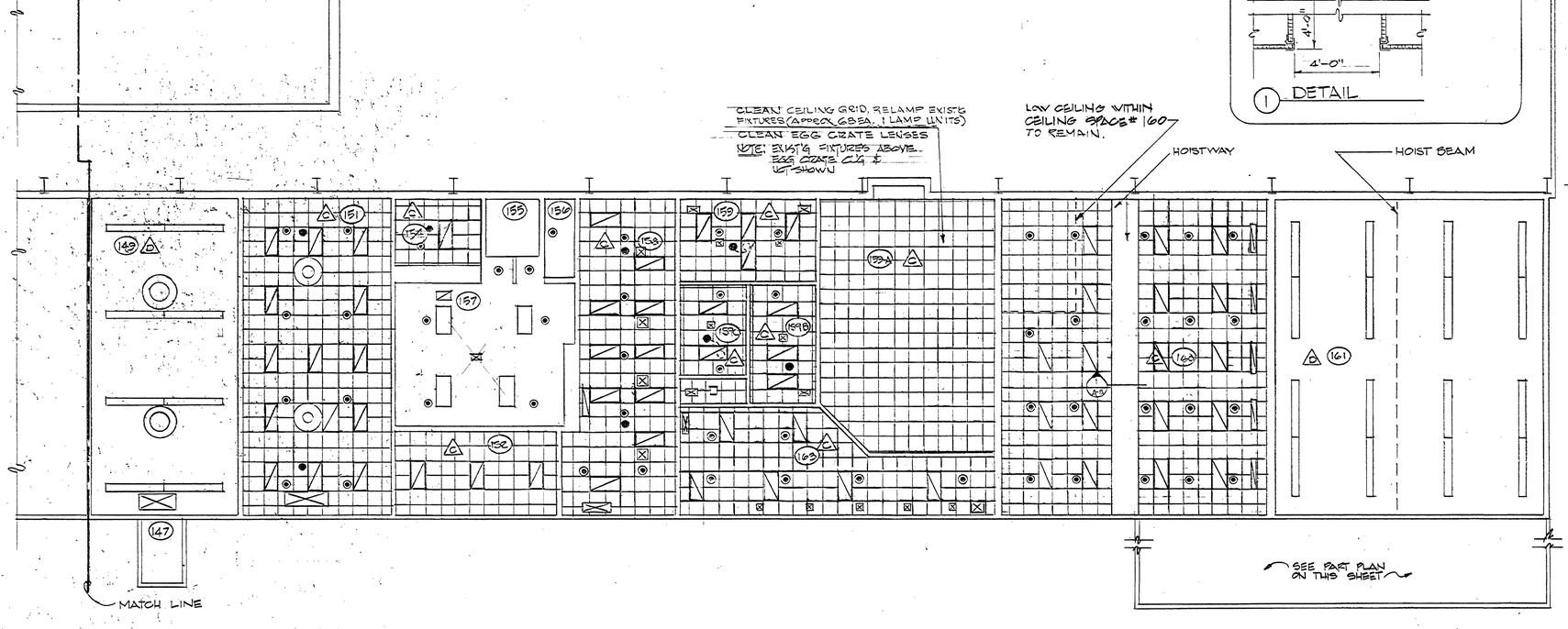

TELECOMMUNICATIONS EQUIPMENT AFFECTED BY THIS CONTRACT WORK IS NOT TO BE ALTERED OR REMOVED BY THE CONTRACTOR. CONTACT THE COR IN THE EVENT OF A CONFLICT.

SIGNATURE PP51 OFFICE SYMBOL 2/16/78 DATE

CEILING PLAN - EAST END
SCALE 1/8"=1'-0"

Ben Bayless CSSR Jan 16/1978

S. & M. BLDG. | L.T.A. | E.L.T.A.

N

REV.	BY	DATE	REVISION	C.I. NO.	APPROVED

NATIONAL AERONAUTICS AND SPACE ADMINISTRATION
MARSHALL SPACE FLIGHT CENTER HUNTSVILLE, ALABAMA
SMITH SECKMAN REID, INC.

REHABILATATION OF
STRUCTURES & MECHANICS LAB
BUILDING 4619 - PHASE 1
CEILING PLAN - EAST S & M BLDG.

NASA AE CONTRACT NO. NAS8-32449
FILE NO. MSFC 11822

SUBMITTED: Kenny R. Chinn AE DATE: 1-4-78
APPROVAL RECOMMENDED: LAB DATE: 2-21-78
APPROVED: CHIEF, ENGINEERING DIVISION NASA DATE: 7/31/78

REF. NO. A8
DESIGNED D.B. DRAWN D.B. CHECKED E.G.
APPROVAL RECOMMENDED: CHIEF, BRANCH DIVISION DATE:
SCALE: SHOWN
SPEC. NO.
DWG NO. FAC-AY-4619-A8

MSFC FORM 139 REV. 3-71

MSFC MASTER BID DISK 11-18-2013

REHEAT COIL SCHEDULE

MAX. FACE VELOCITY = 500 FPM
① = COOLING CFM
② = HEATING CFM
③ = PERFORMANCE AT HEATING CFM
MAX. ALLOWABLE S.P. = .25"

IDENT.	CFM	MIN. F.A.	COIL SIZE	E.A.T. °F ②	L.A.T. °F ③	ROWS/ FINS	CONN. SIZE	GPM 120° HOT WATER	REMARKS
E-1	4445 ① / 2220 ②	7.5	36"x36"	59°	98.8°	2/8	1½"	19.0	
E-2	1530 / 765	2.55	24"x 15"	59°	83°	2/8	3/4"	4.0	
E-3	1990 / 995	3.3	24"x24"	59°	93.3°	2/8	1"	7.4	
E-4	920 / 550	1.5	30"x12"	59°	112.7°	2/12	1"	6.2	
E-5	1520 / 760	2.53	24"x15"	59°	104°	2/12	1"	7.4	
E-6	1670 / 835	2.8	24"x18"	59°	107.6°	2/12	1¼"	9.0	
E-7	1300 / 650	2.2	18"x18"	59°	85.6°	2/8	3/4"	4.0	

HVAC DRAWING INDEX

DWG. NO.	DESCRIPTION	DWG. NO.	DESCRIPTION
M-1	HVAC SCHEDULES & DETAILS	M-5	HVAC PENTHOUSES
M-2	HVAC SIM BLDG (WEST END)		
M-3	HVAC SIM BLDG. (EAST END)		
M-4	HVAC LTA BLDG.		

A-C UNIT SCHEDULE

HDT = HORIZOUTAL DRAW THRU
H&V = HEATING & VENTILATING UNIT
* = OR APPROVED EQUAL
** STEAM HEATING COIL DATA
① = REUSE EXISTING
② = REPLACE P.L. & S.S.P.S.
③ = COMB. - X-LINE (NEW)
④ = PILOT LIGHT
⑤ = H.O.A. SWITCH
⑥ = CONTROL TRANSF. 480V-120V
ⓐ = LOW VELOCITY FILTER SECTION W/ 2" THROWAWAY FILTERS
Ⓑ = OUTLET DAMPER
Ⓒ = STARTERS TO BE NEMA SIZE 1 (MIN)

IDENT.	AREA SERVED	TYPE	* MFR. & MODEL NO.	FAN CFM	FAN EXT. S.P.	FAN TOT. S.P.	OUTSIDE AIR MIN.	OUTSIDE AIR MAX.	COOLING COIL DEHUM CFM	COOLING COIL MAX FV	COOLING COIL ENT. DB/WB	COOLING COIL LVG. DB/WB	COOLING COIL GTH BTUH	COOLING COIL GPM WTR.	COOLING COIL CH. WTR ENT/LVG	COOLING COIL ROWS/ FINS	COOLING COIL MAX AIR S.P. LOSS	COOLING COIL MAX WTR PRESS DROP	COOLING COIL PIPE SIZE	FAN MOTOR H.P.	FAN MOTOR ELECT.	STARTER TYPE	STARTER LOCATION	STARTER DISC. TYPE	STARTER ACCESS.	OP. WT.	ISOLATORS	REMARKS
UC-1	SIM OFFICES NORTH AREA	HDT MED PRESS	TRANE #2S	13,300	1.0"	2.5"	1100	13,300	13,300	555	79.4 / 66.5	59.3 / 51.5	380,560	76	50 / 60	6 / SER 16	1.2"	10.0'	3"	15	460-3-60	③	MECH. ROOM 202	NON-FUSED	④⑤⑥	3200#	SPRING	ⒶⒷ
UC-2	SIM LAB AREA SOUTH COL 1-7	HDT MED PRESS	TRANE # 3S	17,065	.75"	2.5"	5000	17,065	17,065	560	83.0 / 68.2	53.1 / 57.3	664,470	133	50 / 60	6 / SER 16	1.25"	10.0'	4"	20	460-3-60	③	MECH. ROOM 201	FUSED	④⑤⑥	4300#	SPRING	ⒶⒷⒸ
UC-3	SIM LAB AREA SOUTH COL 7-21	HDT LOW PRESS.	TRANE #3S	14,690	.50"	2.0"	1600	14,690	14,690	500	80.0 / 66.7	53.7 / 57.1	447,135	90	50 / 60	6 / SER 16	1.0"	10.0'	3"	10	460-3-60	①	MECH. ROOM 201	FUSED	①	3500#	SPRING	ⒶⒷⒸ
HV-1	LOAD TEST ANNEX BLDG	H&V	TRANE #3S	19000	.50"	1.25"	—	—	**19000	640	65.0	85.2	424,300	450 PPH ST	STEAM 5 PSIG	1 / SER 34	0.2	—	2" STEAM 1½ COND.	10	460-3-60	③	AT UNIT	NON FUSED	④⑤⑥	2000#	SPRING HANGERS	ⒶⒸ

CONVERTOR SCHEDULE

* PRESSURE @ CONTROL VALVE
2nd PRESSURE AT CONVERTOR SHELL

SYSTEM	GPM	ENT	LVT	HEATING CAPACITY BTU/HR	STM. CONS. #/HR.	* STEAM PRESS	MAX. PRESS. DROP	CONN. SIZE STM.	CONN. SIZE COND.	TRAP SIZE & NO.	SCALE FACTOR	REMARKS
HOT WATER REHEAT	57.0	115°	125°	285,000	300	10#	5.0	2"	1¼"	1-2 SARCO BT	.0005	

PUMP SCHEDULE

IDENT.	SYSTEM	TYPE	MFR. & MODEL NO.	GPM	FT. HEAD	MOTOR MIN. H.P.	MOTOR RPM	MOTOR VOLTAGE	STARTER-NEMA SIZE 1 (MIN.) TYPE	STARTER-NEMA SIZE 1 (MIN.) LOCATION	STARTER-NEMA SIZE 1 (MIN.) DISC. TYPE	STARTER-NEMA SIZE 1 (MIN.) ADDITIONAL FEATURES	REMARKS
P-1	HOT WATER REHEAT	IN LINE	B&G 6"A SERIES 60-19	57	25	1	1750	460-3-60	COMB-X-LINE	MECH. ROOM	FUSED	RE-USE EXIST'G SEE SH E-3	
P-2	CONDENSATE RET UNIT	CENTRI.	HOFFMAN 134 HCS	22.5	93	1½	3500	460-3-60	COMB-X-LINE	AT UNIT	NON FUSED	H.O.A., P.L. C.T. TRANS.	23 GAL. RECEIVER
P-3 P-4	CONDENSATE PUMPS	CENTRI.	HOFFMAN UH-2-3	70	93	3	3500	460-3-60	COMB-X-LINE	AT PUMPS	NON FUSED	H.O.A., P.L. C.T. TRANS.	COMPLETE W/ STEEL BASE PLATE, FLOAT SWITCH ALTERNATOR

DIFFUSER AND GRILLE SCHEDULE

CEILING DIFFUSER CFM RANGE	CEILING DIFFUSER NECK SIZE	CEILINGRETURN/EXHAUST GRILLE CFM RANGE	CEILINGRETURN/EXHAUST GRILLE FACE SIZE
0 — 70	4"Φ	0—70	8"x4"
71 — 120	5"Φ ①	71—160	12"x6"
121 — 175	6"Φ ②	161—225	10"x10"
176 — 300	8"Φ ③	226—325	12"x12"
301 — 500	10"Φ	326—575	16"x16"
501 — 750	12"Φ	576—730	18"x18"
751 — 1000	15"Φ	731—975	24"x18"
1001 — 1250	18"Φ	976—1300	24"x24"
		1301 — 1950	36"x24"
		1951 — 2600	48"x24"

SIZES ARE BY THIS SCHEDULE UNLESS OTHERWISE SPECIFICALLY NOTED. DIFFUSERS ARE 4-WAY BLOW UNLESS NOTED TO BE 3-WAY(3-W)OR 2WAY(2-W).
①6ΦFOR 2W&3W ②8ΦFOR 2W&3W ③10ΦFOR 2W&3W

APPARATUS CASING DETAIL

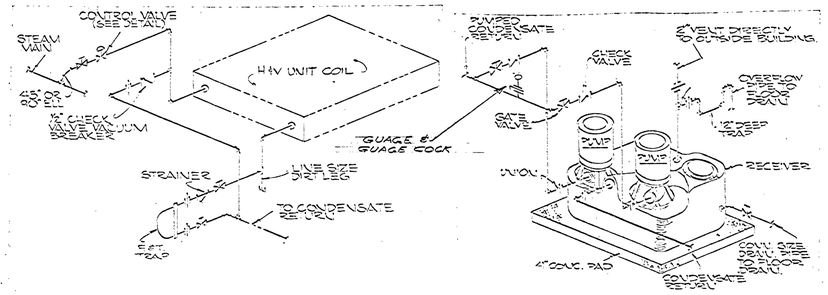

STEAM PIPING AT H & V. UNITS

PIPING DETAIL (ABOVE FLOOR) AT CONDENSATE PUMP

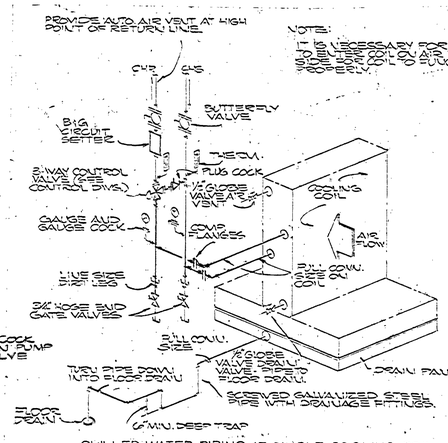

CHILLED WATER PIPING AT SINGLE COOLING COIL & MOISTURE COND. DRAIN DETAIL

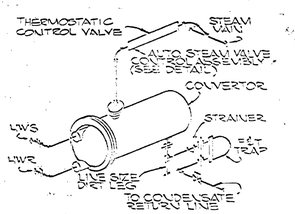

STEAM PIPING AT CONVERTOR

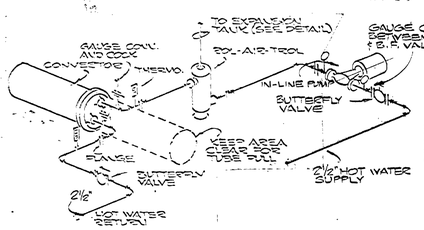

HOT WATER HEATING PIPING DETAIL

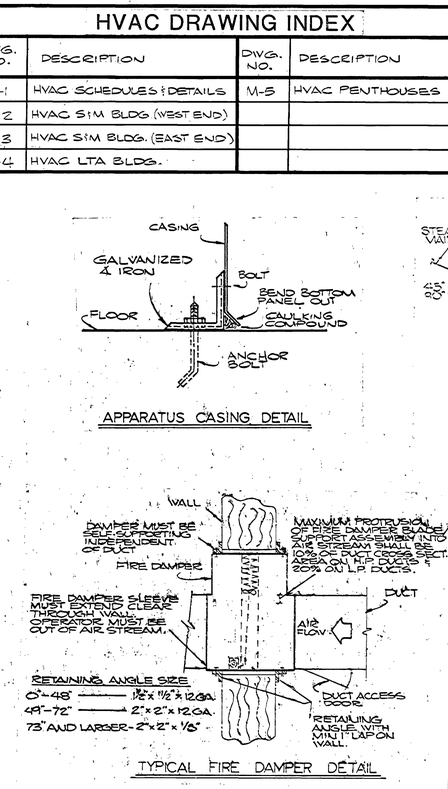

TYPICAL FIRE DAMPER DETAIL

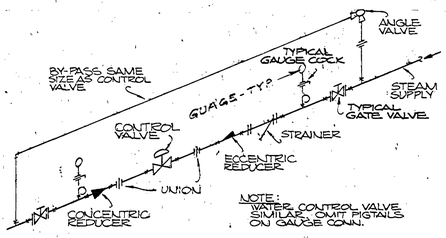

AUTO STEAM CONTROL VALVE ASSEMBLY

SYSTEM	TANK SIZE (GALLONS)
HOT WATER	40

NOTE: VENT THIS TO EXTEND INTO TANK 2/3 OF TANK DIAMETER.

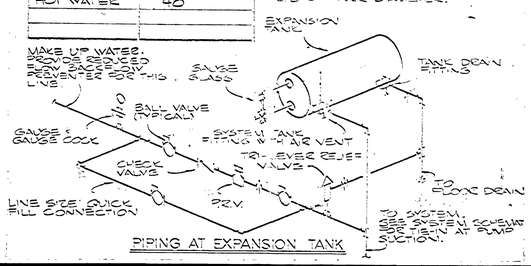

PIPING AT EXPANSION TANK

TELECOMMUNICATIONS EQUIPMENT AFFECTED BY THIS CONTRACT WORK IS NOT TO BE ALTERED OR REMOVED BY THE CONTRACTOR. CONTACT THE COR IN THE EVENT OF A CONFLICT.

R. Franklin AP51 7/16/78
SIGNATURE OFFICE SYMBOL DATE

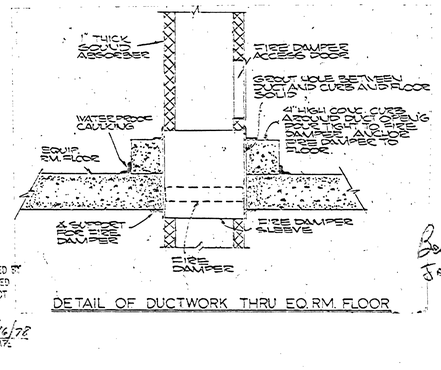

DETAIL OF DUCTWORK THRU EQ. RM. FLOOR

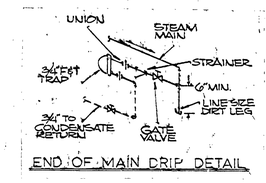

END OF MAIN DRIP DETAIL

Ben Bagley CS21 Jan 16 1978

REV.	BY	DATE	REVISION	C.I. NO.	APPROVED
1	RJS	2/27/78	CHANGED COIL SIZE	33165-R	

NATIONAL AERONAUTICS AND SPACE ADMINISTRATION
MARSHALL SPACE FLIGHT CENTER HUNTSVILLE, ALABAMA
SMITH SECKMAN REID, INC.

REHABILITATION OF BLDG. 4619 PHASE 1
HVAC SCHEDULES & DETAILS

NASA AE CONTRACT NO. NAS8-32449 FILE NO. MSFC 1.1823

REF. NO.	SUBMITTED:	APPROVAL RECOMMENDED:	APPROVED:
M-1	AE: DATE: 1-4-78	LAB: DATE: 2-31-78	CHIEF ENGINEERING DIVISION NASA: DATE: 7/31/78
	DESIGNED R.R.C. DRAWN J.G. CHECKED R.R.C. SCALE: SHOWN	APPROVAL RECOMMENDED: CHIEF, BRANCH DESIGN DATE: 7/11/78 SPEC. NO. FAC-1805	DWG NO. FAC-AY-4619-M1

MSFC - FORM 232 REV. 7-71)

MSFC MASTER BID DISK 11-18-2013

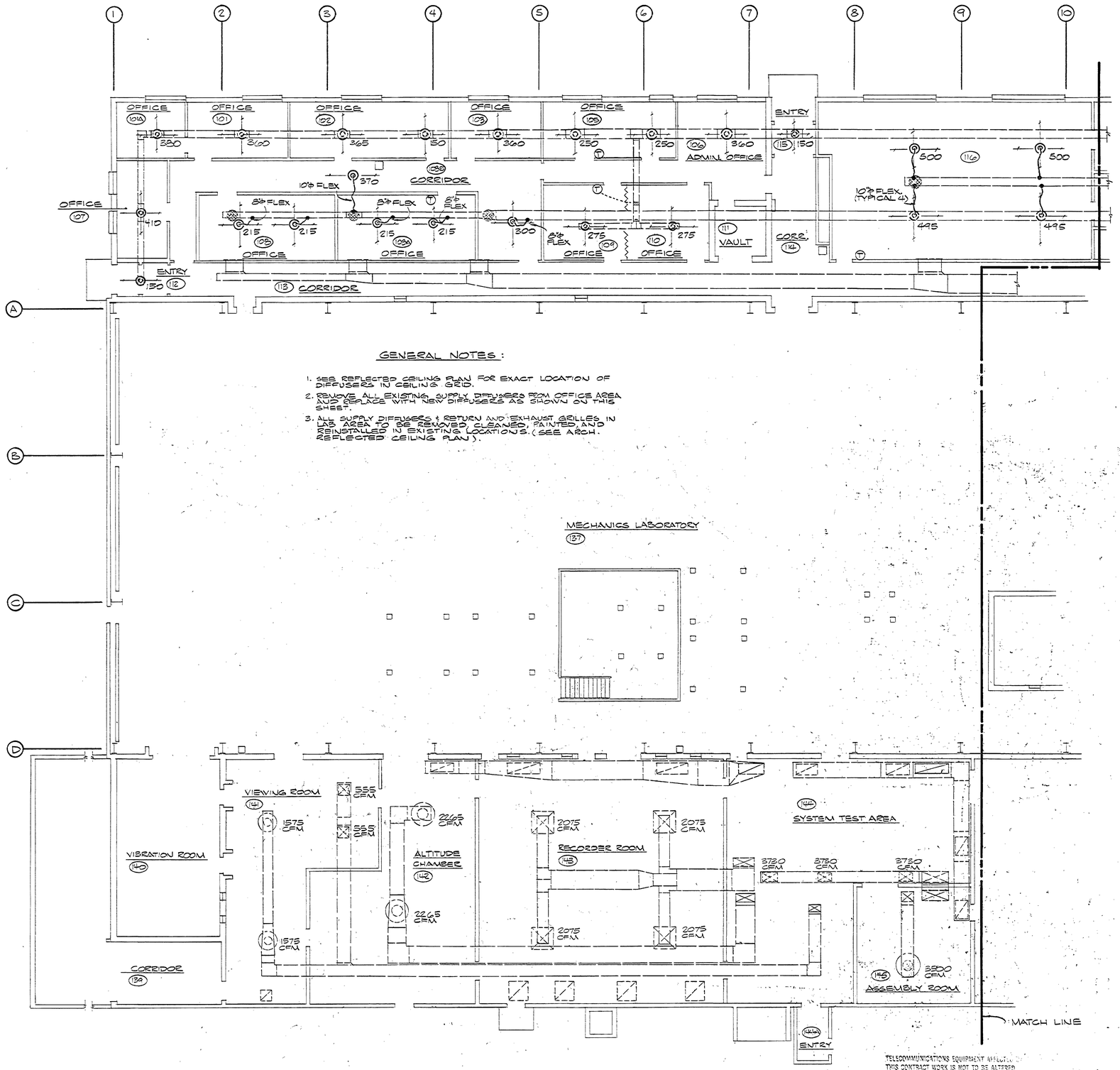

GENERAL NOTES:

1. SEE REFLECTED CEILING PLAN FOR EXACT LOCATION OF DIFFUSERS IN CEILING GRID.
2. REMOVE ALL EXISTING SUPPLY DIFFUSERS FROM OFFICE AREA AND REPLACE WITH NEW DIFFUSERS AS SHOWN ON THIS SHEET.
3. ALL SUPPLY DIFFUSERS & RETURN AND EXHAUST GRILLES IN LAB AREA TO BE REMOVED, CLEANED, PAINTED, AND REINSTALLED IN EXISTING LOCATIONS. (SEE ARCH. REFLECTED CEILING PLAN).

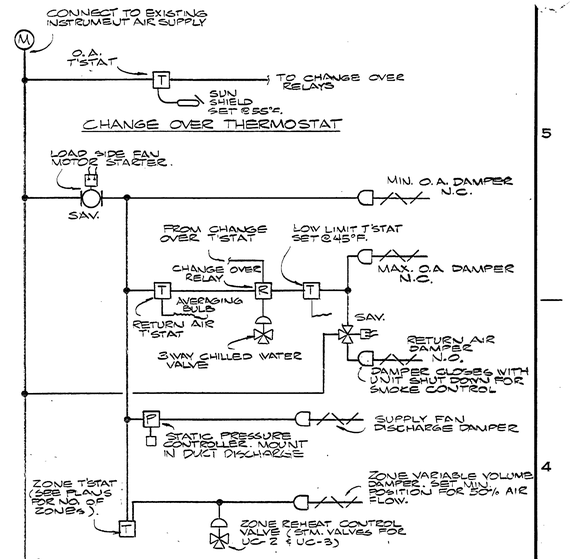

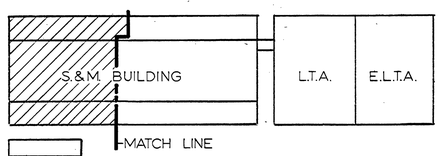

KEY PLAN
NO SCALE

REV.	BY	DATE	REVISION	C.I. NO.	APPROVED

TELECOMMUNICATIONS EQUIPMENT AFFECTED BY THIS CONTRACT WORK IS NOT TO BE ALTERED OR REMOVED BY THE CONTRACTOR. CONTACT THE COR IN THE EVENT OF A CONFLICT.

SIGNATURE — OFFICE SYMBOL — DATE

Ben Bayley CS21 Jan 16, 1978

NATIONAL AERONAUTICS AND SPACE ADMINISTRATION
MARSHALL SPACE FLIGHT CENTER HUNTSVILLE, ALABAMA
SMITH SECKMAN REID, INC.

REHABILITATION OF BLDG. 4619 PHASE 1

HVAC DUCTWORK

STRUCTURES & MECHANICS BLDG. - WEST END

NASA AE CONTRACT NO. NAS8-32449 — FILE NO. MSFC 118243

SUBMITTED: Kayo R. Chan AE: DATE: 1-4-78	APPROVAL RECOMMENDED: LAB: DATE: 3-31-78	APPROVED: CHIEF ENGINEERING DIVISION NASA DATE: 9/31/78	
DESIGNED R.A.C. DRAWN J.A. CHECKED R.A.C. SCALE: SHOWN	APPROVAL RECOMMENDED: CHIEF BRANCH DESIGN DATE: 9/1978 SPEC. NO. FAC-1805	DWG NO. FAC-AY-4619-M2	

REF. NO. M-2

MSFC - FORM 232 REV. 7-71)

MSFC MASTER BID DISK 11-18-2013

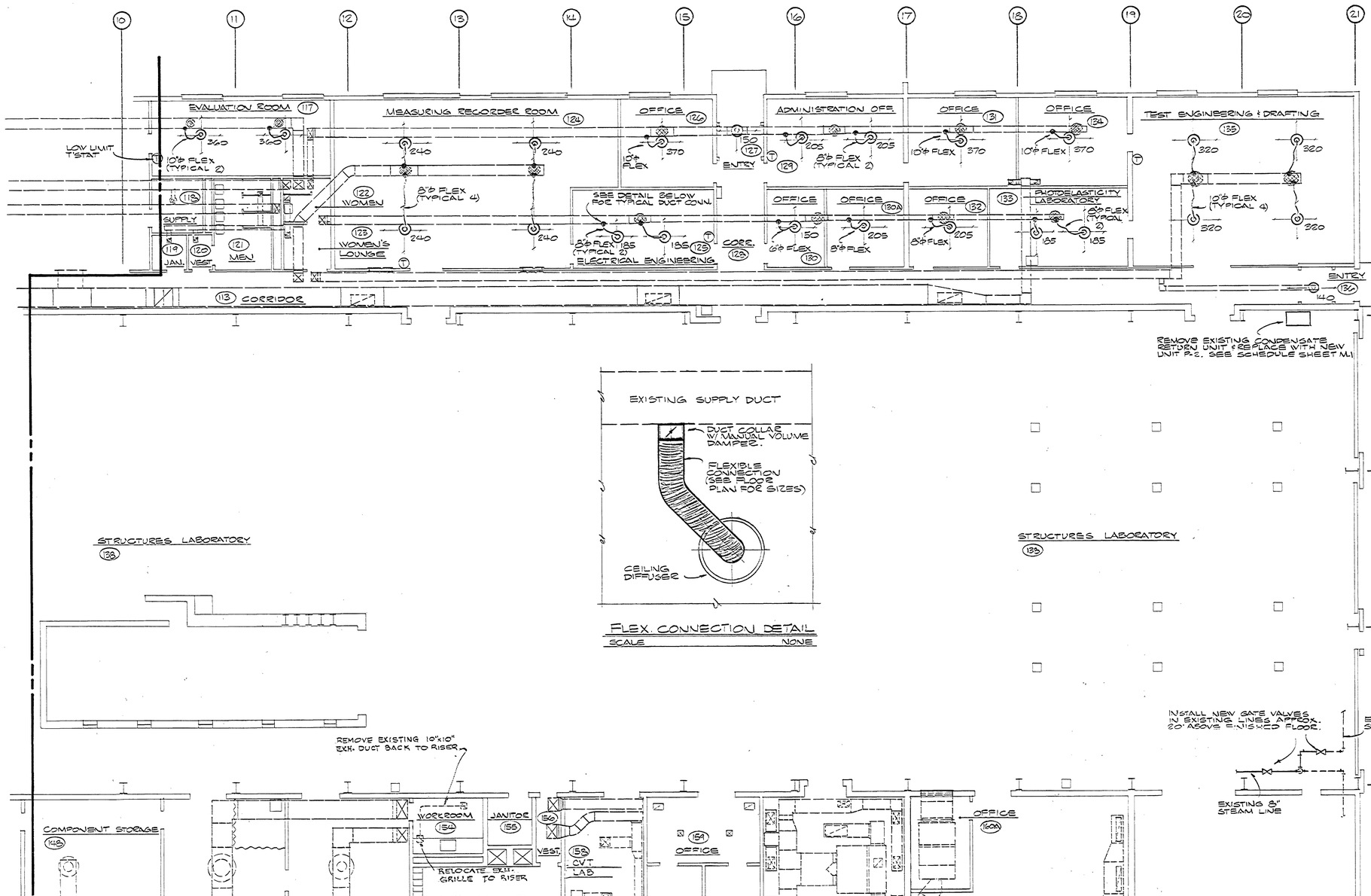

TELECOMMUNICATIONS EQUIPMENT AFFECTED BY THIS CONTRACT WORK IS NOT TO BE ALTERED OR REMOVED BY THE CONTRACTOR. CONTACT THE COR IN THE EVENT OF A CONFLICT.

R. K. Rankin SIGNATURE — ATSI OFFICE SYMBOL — 2/10/78 DATE — Ben Bowling C.S.A. — Jan 16 1978

REV.	BY	DATE	REVISION	C.I. NO.	APPROVED

NATIONAL AERONAUTICS AND SPACE ADMINISTRATION
MARSHALL SPACE FLIGHT CENTER HUNTSVILLE, ALABAMA
SMITH SECKMAN REID, INC.

REHABILITATION OF BLDG. 4619 PHASE 1
HVAC DUCTWORK
STRUCTURES & MECHANICS BLDG. - EAST END

NASA AE CONTRACT NO. NAS8-32449 — FILE NO. MSFC 11825

SUBMITTED: Kenneth R. Clinton AE: DATE: 1-4-78
APPROVAL RECOMMENDED: LAB: DATE: 2-21-78
APPROVED: CHIEF, ENGINEERING DIVISION NASA: DATE: 7/31/78

REF. NO. M-3
DESIGNED RRC DRAWN JG CHECKED RRC SCALE: SHOWN
APPROVAL RECOMMENDED: CHIEF, [illegible] BRANCH DESIGN DATE: 2/11/78 SPEC. NO. FAC-1805
DWG NO. FAC-AY-4619-M3

MSFC MASTER BID DISK 11-18-2013

NAS 17-0153 7-73 2981+

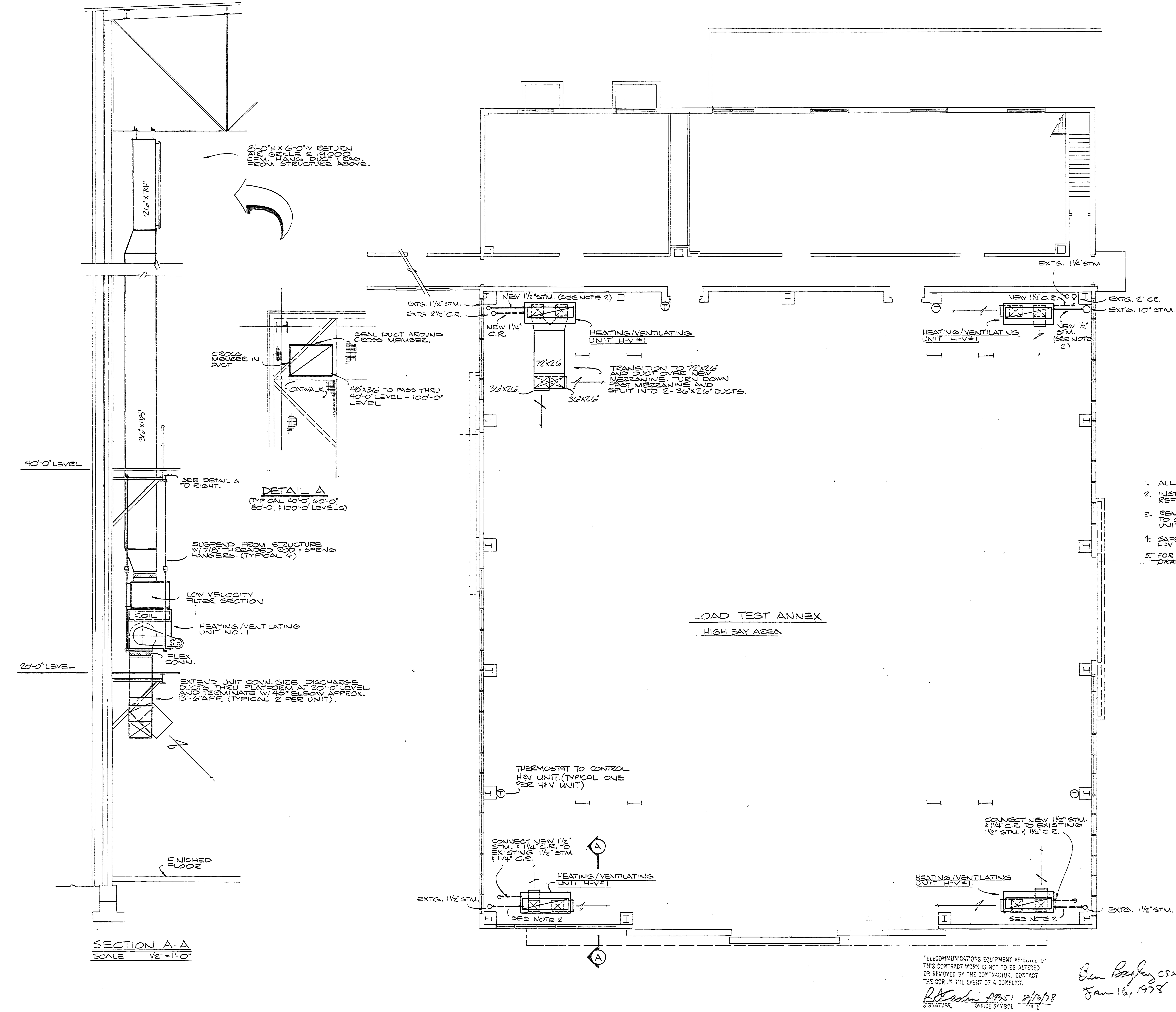

GENERAL NOTES:

1. ALL SUPPLY & RETURN DUCTWORK FOR H&V UNITS IS UNINSULATED.
2. INSTALL STEAM CONTROL VALVE IN 1 1/2" STM. LINE TO H&V UNITS. REFER TO AUTO STEAM CONTROL VALVE DETAIL ON SHEET M-1.
3. REMOVE EXISTING 28 HEATING & VENTILATION UNITS AND TURN OVER TO OWNER. CAP EXISTING STEAM & COND. RETURN LINE TO EACH UNIT.
4. SAFE OFF OUTSIDE AIR INTAKE LOUVER OPENING FOR EXISTING H&V UNITS WITH SHEET METAL. (TYPICAL 28 PLACES)
5. FOR DEMOLITION IN LTA HIGH BAY AREA REFER TO DRAWING NOS. FE-C-4619-AC7 & FE-C-4619-AC-9

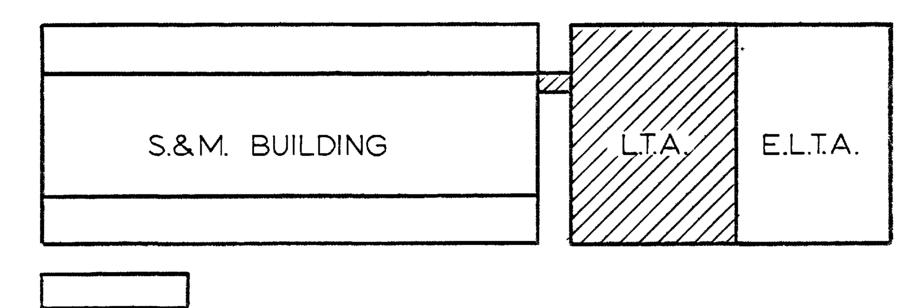

KEY PLAN
NO SCALE

TELECOMMUNICATIONS EQUIPMENT AFFECTED BY THIS CONTRACT WORK IS NOT TO BE ALTERED OR REMOVED BY THE CONTRACTOR. CONTACT THE COR IN THE EVENT OF A CONFLICT.
SIGNATURE OFFICE SYMBOL DATE 2/13/78

Jan 16, 1978

REV.	BY	DATE	REVISION	C.I. NO.	APPROVED

NATIONAL AERONAUTICS AND SPACE ADMINISTRATION
MARSHALL SPACE FLIGHT CENTER HUNTSVILLE, ALABAMA
SMITH SECKMAN REID, INC.

REHABILITATION OF BLDG. 4619 PHASE 1
HEATING & VENTILATING
LOAD TEST ANNEX

NASA AE CONTRACT NO. NAS8-32449
FILE NO. MSFC 11826
SUBMITTED: DATE: 1-4-78
APPROVAL RECOMMENDED: DATE: 3-31-78
APPROVED: CHIEF, ENGINEERING DIVISION DATE: 7/31/78
REF. NO. M-4
DESIGNED RRC
DRAWN JG
CHECKED RRC
SCALE: 1/8" = 1'-0"
DESIGN DATE: 4/11/78
SPEC. NO. FAC-1805
DWG NO. FAC-AY-4619-M4

MSFC MASTER BID DISK 11-18-2013

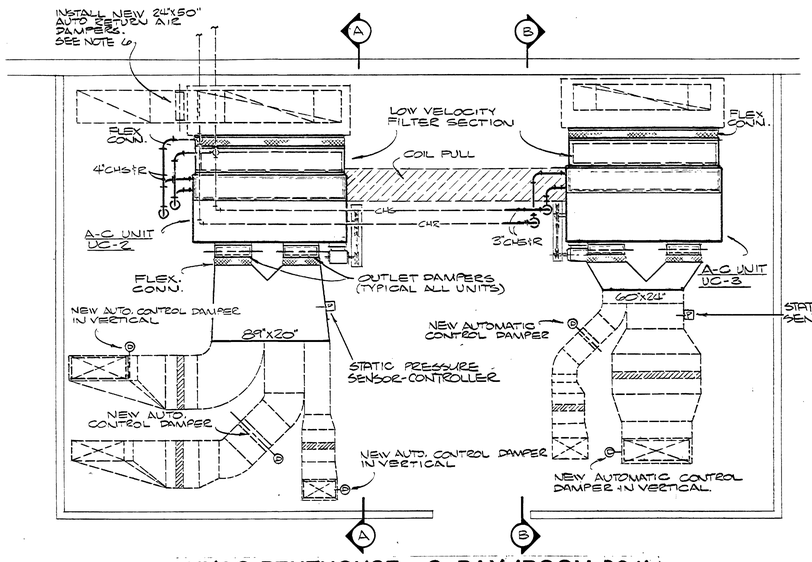

HVAC PENTHOUSE - S. BAY (ROOM 201)

GENERAL NOTES:

1. ALL NEW DUCTWORK SHALL BE INTERNALLY LINED WITH 1" THICKNESS FIBERGLASS DUCT LINER.
2. ALL DUCT DIMENSIONS ARE INSIDE CLEAR.
3. INSTALL AUTOMATIC CONTROL DAMPER IN VERTICAL BETWEEN REHEAT COIL & PENTHOUSE FLOOR OF ZONES 2-1 THRU 2-7.
4. SEE CONVERTOR & EXPANSION TANK PIPING DETAIL ON SHEET M-1.
5. REPIPE A-C UNITS UC-1, UC-2, & UC-3. (SEE CHILLED WATER PIPING DETAIL ON SHEET M-1.)
6. CONTROL DAMPERS SHALL HAVE LEAKAGE RATING OF 5% MAXIMUM.
7. REMOVE EXIST. A/H UNITS AND INSTALL NEW A/H UNITS AS INDICATED - SEE SPECIAL CONDITION SECT. OF SPECS.

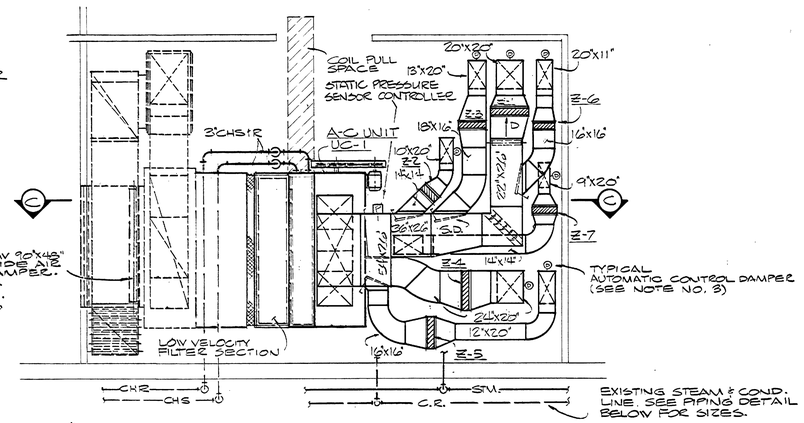

HVAC PENTHOUSE - N. BAY (ROOM 202)

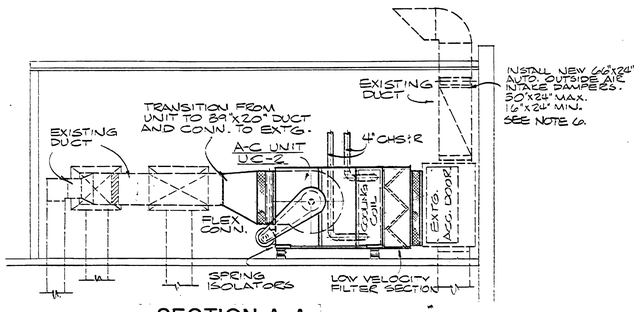

SECTION A-A

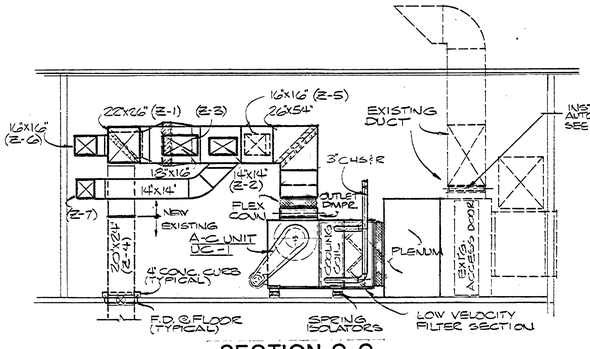

SECTION C-C

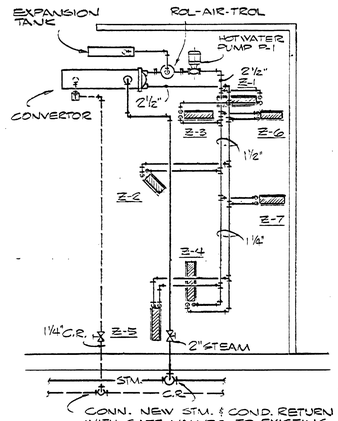

CONN. NEW STM. & COND. RETURN WITH GATE VALVES TO EXISTING STEAM & COND. RETURN PIPING.

PIPING DETAIL

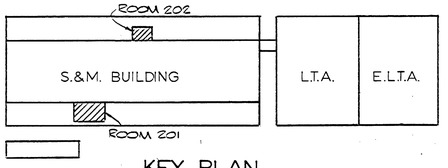

KEY PLAN
NO SCALE

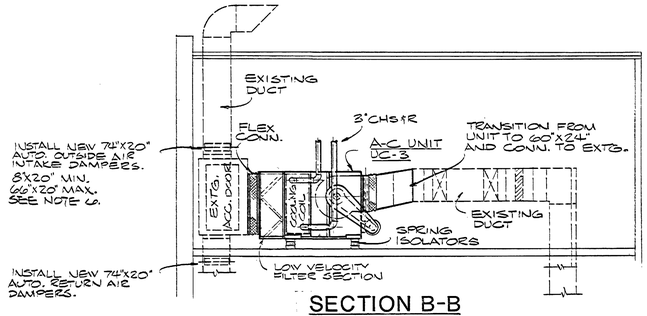

SECTION B-B

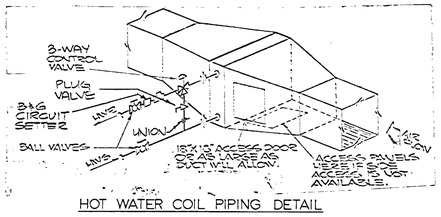

HOT WATER COIL PIPING DETAIL

TELECOMMUNICATIONS EQUIPMENT AFFECTED BY THIS CONTRACT WORK IS NOT TO BE ALTERED OR REMOVED BY THE CONTRACTOR. CONTACT THE COR IN THE EVENT OF A CONFLICT.

SIGNATURE OFFICE SYMBOL DATE

Ben Bradley CS21 June 16, 1978

REV.	BY	DATE	REVISION	C.I. NO.	APPROVED

NATIONAL AERONAUTICS AND SPACE ADMINISTRATION
MARSHALL SPACE FLIGHT CENTER HUNTSVILLE, ALABAMA
SMITH SECKMAN REID, INC.

REHABILITATION OF BLDG. 4619 PHASE 1
HVAC PENTHOUSES
STRUCTURES & MECHANICS BLDG.

NASA AE CONTRACT NO. NAS8-32449 FILE NO. MSFC 11827

SUBMITTED: AE: DATE: 1-4-78
APPROVAL RECOMMENDED: LAB: DATE: 3-7-78
APPROVED: CHIEF ENGINEERING DIVISION NASA: DATE: 7/31/78

REF. NO. M-5
DESIGNED RRC
DRAWN JG
CHECKED RRC
SCALE: 1/2" = 1'-0"
APPROVAL RECOMMENDED: CHIEF, BRANCH
DESIGN DATE: 4/11/78
SPEC. NO. FAC-1005
DWG NO. FAC-AY-4619-M5

MSFC MASTER BID DISK 11-18-2013

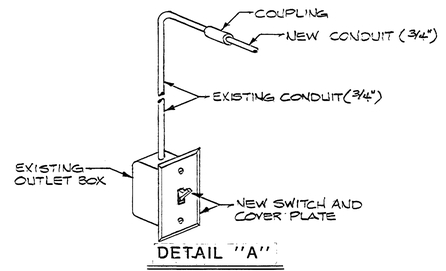

DETAIL "A"

RENOVATION AT EXISTING SWITCH LOCATION

SCALE: NONE

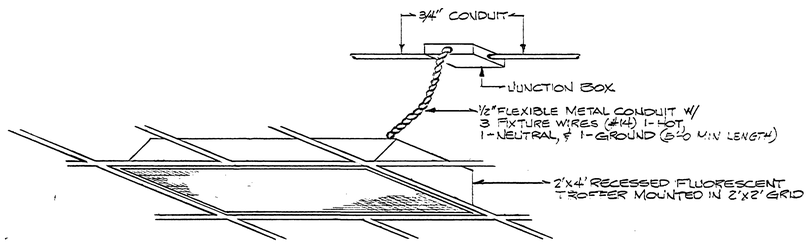

DETAIL "B"

RECESSED FIXTURE WIRING DETAIL

SCALE: NONE

GENERAL NOTES:

1. ALL WIRING IN REMODELED AREAS SHALL BE REMOVED AND TURNED OVER TO CONTRACTING OFFICER.
2. BRANCH CIRCUIT CONDUIT SHALL BE REMOVED ONLY TO THE FIRST JUNCTION BOX. PLUG KNOCKOUT IN JUNCTION BOX. REMOVE WIRE BACK TO PANEL.
3. THESE PLANS SHOW REUSE OF EXISTING HOMERUN CONDUITS AS SHOWN ON ORIGINAL DRAWINGS. LOCATIONS SHOULD BE VERIFIED BY THE CONTRACTOR AND EXISTING HOMERUNS USED AS MUCH AS POSSIBLE.
4. ALL ELECTRICAL WORK SHALL COMPLY WITH THE REQUIREMENTS OF THE NEC AS A MIN. STANDARD. AN ADDITIONAL WIRE OF GREEN COLOR SHALL BE RUN IN THE BRANCH CIRCUIT CONDUITS & CONNECTED TO THE FIXTURE FRAMES FOR EQUIPMENT GROUNDING, EVEN THOUGH NOT SHOWN ON DWG'S.
5. DEMOLITION SHALL INCLUDE REMOVAL OF THE FOLLOWING APPROXIMATE QUANTITIES OF FIXTURES. CONTRACTOR SHALL VISIT SITE TO VERIFY QUANTITIES.
   - SURFACE MOUNTED FLUORESCENT – 360
   - EXIT SIGNS – 8
   - SURFACE MOUNTED INCANDESCENT – 13
   - RECESSED INCANDESCENT – 9
   - 8' INDUSTRIAL TYPE FLUORESCENT – 104
   - 4' INDUSTRIAL TYPE FLUORESCENT – 9
6. MOUNT NEW INDUSTRIAL FIXTURES AT MOUNTING HEIGHT OF EXISTING FIXTURES IN EACH RESPECTIVE ROOM.
7. CIRCUIT LOAD IDENTIFICATION SHOWN IN PANEL SCHEDULES SHALL BE VERIFIED FOR ACCURACY – LIGHTS & RECEPTACLE CIRCUITS IDENTIFIED BY ROOM NO. & NEW CIRCUIT DIRECTORIES TYPED & DISPLAYED ON THE PANEL DOOR TO INDICATE THE UPDATED CIRCUIT INFORMATION.

ALL PANELS & BREAKERS EXISTING — PANEL SCHEDULE — 120/208V., 3ϕ, 4W.

DESCRIPTION	CIRCUIT IN USE	SPARE SPACE	BREAKER SIZE	LOAD KW/HP	FEEDER	REMARKS (NOTE 7)
"LA"	1,3,5,7,9,10,12	—	20/1	8.1	#12	LIGHTS
	—	2,4,6,8,11,13,15,17,19	20/1	—	—	SPARE BKRS
	14-17	—	20/1	3.3	EXISTING	RECEPTACLES
	18	—	20/1	0.2	EXISTING	EXIT LIGHTS
	19-24	—	20/1	5.6	EXISTING	RECEPTACLES
	—	25-30	20/1	—	—	SPARE BKR'S
"LB"	1-4,6,8	—	20/1	7.4	#12	LIGHTS
	—	5,7,9-12,14	20/1	—	—	SPARE BKR'S
	13	—	20/1	0.2	EXISTING	EXIDE LIGHTGUARD-RM.113
	—	15-18	20/1	—	—	SPARE BKR'S
	19	—	20/1	0.4	EXISTING	WATER COOLER
	20-24	—	20/1	4.6	EXISTING	RECEPTACLES
	25	—	20/1	1.2	EXISTING	FIRE ALARM
* BREAKER OCCUPIES SPACES 26 & 28.	26*	—	30/2	0.2	EXISTING	WATER HEATER
	27	—	20/1	0.4	EXISTING	VENDING
	—	29-30	20/1	—	—	SPARE BKR'S
"LC"	1-11,13,15*	—	20/1	18.8	#12	LIGHTS
	—	12,14,16	20/1	—	—	SPARE BKR'S
	18	—	20/1	0.2	EXISTING	EXIDE LIGHTGUARD ROOM 113
	19	—	20/1	0.3	EXISTING	EXIT LIGHTS
	20-28	—	20/1	9.2	EXISTING	RECEPTACLES
	29	—	20/1	0.4	EXISTING	WATER COOLER
	—	30-36	20/1	—	—	SPARE BKR'S
"LJ"	1,2,4,5,7-12,15,17	—	20/1	17.0	#12	LIGHTS
	6	—	20/1	0.1	EXISTING	EXIT LIGHTS
	13	—	20/1	0.2	EXISTING	EXIDE LIGHTGUARD ROOM 137
	14,16,18	—	20/1	3.6	EXISTING	RECEPTACLES
	—	3,19-24	20/1	—	—	SPARE BKR'S
"LK"	1,3,5-7,9,11,13	—	20/1	11.4	#12	LIGHTS
	—	2,4,6,8,10,12,14,16-20	20/1	—	—	SPARE BKR'S
	21-22	—	20/1	1.2	EXISTING	RECEPTACLES
	23-25,27	—	20/1	3.2	EXISTING	MECHANICAL EQUIP.
	—	26,28-30	20/1	—	—	SPARE BKR'S
"LL"	*	—	20/1	30.8	#12	LIGHTS
	11	—	20/1	0.2	EXISTING	EXIDE LIGHTGUARD ROOM 136
*1-4, 6-10, 12, 13, 16, 18-22, 24, 26, 28,	—	5,11,14,15,17	20/1	—	—	SPARE BKRS
	23	—	20/1	0.1	EXISTING	EXIT LIGHTS
	—	25,27,29,30-32	20/1	—	—	SPARE BKRS

LEGEND

SYMBOL	DESCRIPTION	MOUNT HEIGHT
	CONDUIT CONCEALED IN WALL AND CEILING	—
	CONDUIT EXPOSED ON WALL OR CEILING (NOTE 4)	—
H	HOMERUN CONDUIT	—
E	EXISTING CONDUIT	—
o	FIXTURE OUTLET BOX	—
	FLUORESCENT FIXTURE SURFACE MTD.	—
	FLUORESCENT FIXTURE RECESSED	—
⊗	EXIT SIGN	—
◇	DESIGNATES FIXTURE TYPE, SEE FIXTURE SCHEDULE	—
# Se	EXISTING OUTLET BOX W/ NEW SINGLE POLE SWITCH	—
S	SINGLE POLE SWITCH	48" ℄
S3	THREE WAY SWITCH	48" ℄
ST	MANUAL MOTOR STARTER	48" ℄
S3e	EXISTING OUTLET BOX W/ NEW THREE-WAY SWITCH	48" ℄
T	THERMOSTAT	48" ℄
JBw	JUNCTION BOX W/ FLEX CONNECTION TO EQUIPMENT	—
CS	COMBINATION STARTER	5'-0" ℄
	SAFETY SWITCH, NON FUSIBLE AMP RATING AS INDICATED	—
	SAFETY SWITCH, FUSIBLE AMP RATING AS INDICATED	—
	MOTOR	—
	PANEL	—
F.B.O.	FURNISHED BY OTHERS INSTALLED BY ELECT. CONTR.	—
A.B.C.	ABOVE COUNTER	—
R	EXIST'G FLUORESCENT TROFFER, 2'x4'-4 LAMP, REMOVE & RELOCATE IN POSITION SHOWN, CLEAN & RELAMP, FURNISH & INSTALL NEW ACRYLIC LENS IN APPROX. 45 EXIST'G TROFFERS & NEW ACRYLIC LENS & LAMPS SAME AS FOR FIXTURE TYPE ◇	—

SEE DETAIL "A" THIS SHEET.

LIGHTING FIXTURE SCHEDULE

TYPE	MANUFACTURER	CAT. NO.	LAMPS	MOUNTING	REMARKS
◇	DAY-BRITE	4G42657-4	4-F40WWII	RECESSED	SEE DETAIL "B" THIS SHEET
◇	DAY-BRITE	2X44-757	2-F40WWII	SURFACE	
◇	DAY-BRITE	7123-8	2-F96T12CW	PENDANT STEM	
◇	DAY-BRITE	1X42-707	2-F40	SURFACE	
◇	LITHONIA	ES1-G	2-T6	CEILING	
◇	LITHONIA	ES2-G	2-T6	CEILING	
◇	ART METAL	602	2-T8W	SURFACE	
◇	ART METAL	W-1240	2-F40WWII	WALL	
◇	DAY-BRITE	4G22-657-4	2-F40WWII	RECESSED	SEE DETAIL "B" THIS SHEET

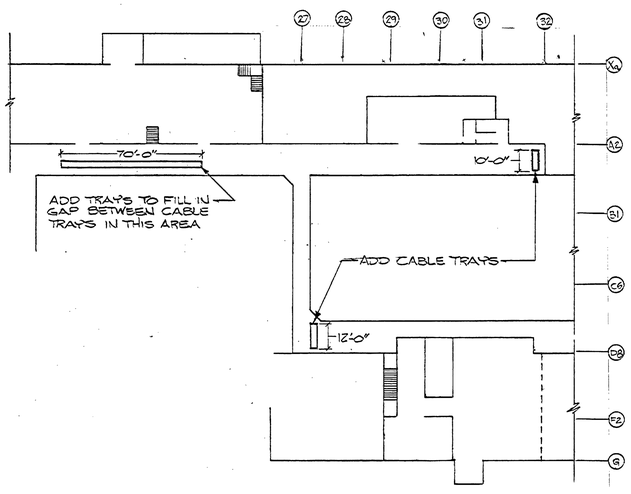

E.L.T.A. BASEMENT CABLE TRAY LAY-OUT

SCALE: NONE

NOTES:

1. PROVIDE 12" WIDE CABLE TRAY TO CONNECT EXISTING SECTIONS IN BASEMENT OF E.L.T.A. APPROXIMATELY 92' OF TRAY WILL BE NECESSARY. A PHYSICAL CONNECTION TO EXISTING TRAY IS NOT REQ'D. MOUNT NEW TRAY AT SAME ELEVATION AS EXIST'G TRAY – SEE SPECIFICATIONS

TELECOMMUNICATIONS EQUIPMENT AFFECTED BY THIS CONTRACT WORK IS NOT TO BE ALTERED OR REMOVED BY THE CONTRACTOR. CONTACT THE COR IN THE EVENT OF A CONFLICT.

R. D. Carlin AT65 2/16/78
SIGNATURE OFFICE SYMBOL DATE

Ben Boyles CS21 Jan 16, 1978

REV.	BY	DATE	REVISION	C.I. NO.	APPROVED

NATIONAL AERONAUTICS AND SPACE ADMINISTRATION
MARSHALL SPACE FLIGHT CENTER HUNTSVILLE, ALABAMA
SMITH SECKMAN REID, INC.

REHABILITATION OF BLDG. 4619 PHASE 1

ELECTRICAL SCHEDULES & DETAILS

NASA AE CONTRACT NO. NAS8-32449. FILE NO. MSFC 11828

SUBMITTED: Kraig R. Clem — AE: DATE: 1-4-78
APPROVAL RECOMMENDED: — LAB: DATE: 1-27-78
APPROVED: — CHIEF, ENGINEERING DIVISION — NASA: DATE: 7/31/78
DESIGNED W.T. CLEVENGER
DRAWN D.E. CARTER
CHECKED R.E. WOOD
APPROVAL RECOMMENDED: — CHIEF, MANAGEMENT BRANCH: — DESIGN DATE: 4/11/78
SCALE: NONE
SPEC. NO. FAC-1805

REF. NO. E-1

DWG NO. FAC-AY-4619-E1

MSFC MASTER BID DISK 11-18-2013

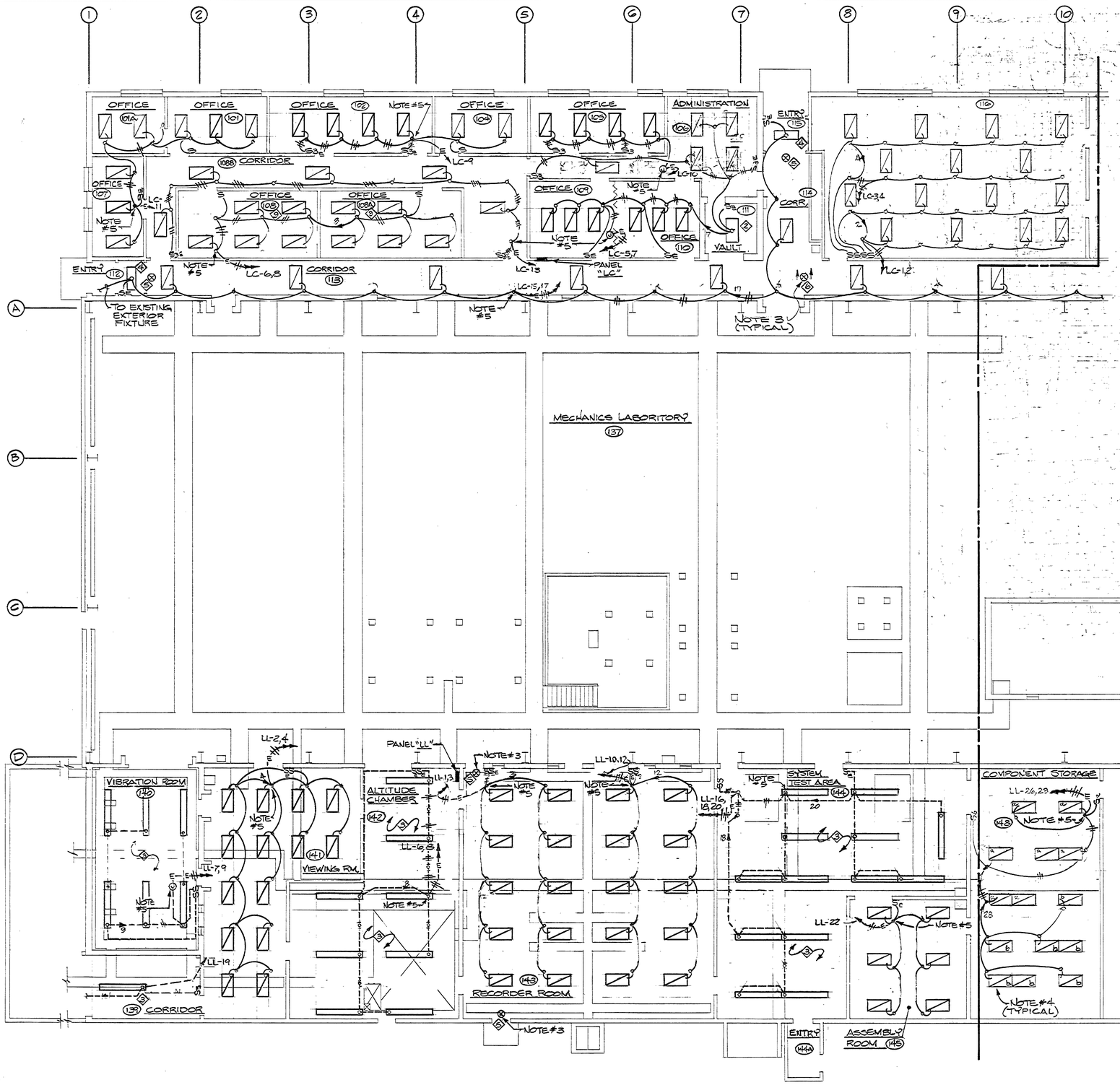

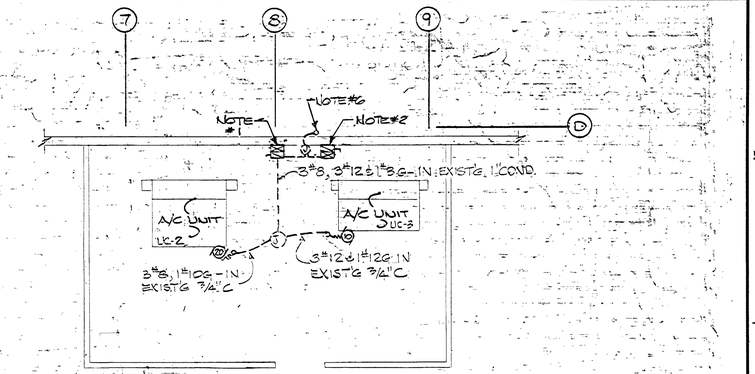

HVAC PENTHOUSE SO. BAY SPACE E140R

(LOCATED ON SOUTH SIDE OF BUILDING)

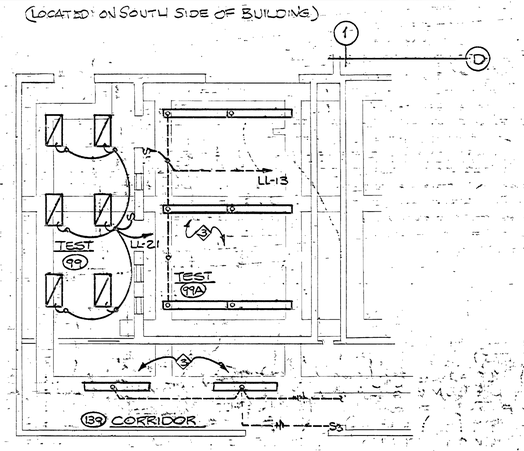

NOTES:

1. REPLACE STARTER FOR EXISTING 7½ HP MOTOR WITH COMBINATION STARTER FOR NEW 20 HP MOTOR. INSTALL NEW WIRE IN EXIST'G CONDUIT, AS SHOWN ON PLAN.
2. REPLACE STARTER FOR EXISTING 5 HP MOTOR WITH EXIST'G COMBINATION STARTER FOR A/C UNIT IN NORTH SIDE PENTHOUSE #E134.R - SEE SH E-3. INSTALL NEW THERMAL OVERLOADS (SEE N EXIST'G STR. AS REQ'D FOR NEW 10 HP UC-3 FAN MOTOR.
3. REPLACE EXISTING EXIT LIGHTS WITH THE TYPE SHOWN. CONNECT TO EXISTING WIRING.
4. ALL FIXTURES TYPE Ⓓ UNLESS OTHERWISE NOTED.
5. APPROXIMATE LOCATION OF EXISTING JUNCTION BOX AND HOMERUN CONDUIT. RELISE BOX AND CONDUIT.
6. INSTALL 3#6 & 1#8G. IN EXIST'G 1" CONDUIT PRESENTLY FEEDING A/C UNITS IN SPACE E140-R FROM J-BOX TO BUS DUCT BKR (APPROX 25') REMOVE EXISTING CONDUCTORS FROM A/C UNITS BACK TO BUS DUCT TAP BREAKER. BUS DUCT IS APPROXIMATELY 15'-0" A.F.F. IN SPACE 137 ALONG COLUMN LINE "A". REPLACE EXIST'G 50AMP BUS TAP BREAKER WITH A 70A 3P 4W PLUG-IN BKR TO ACCOMMODATE EXIST'G WESTINGHOUSE BUS DUCT.

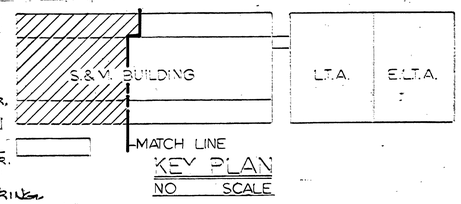

KEY PLAN
NO SCALE

REV.	BY	DATE	REVISION	C.I. NO.	APPROVED

NATIONAL AERONAUTICS AND SPACE ADMINISTRATION
MARSHALL SPACE FLIGHT CENTER HUNTSVILLE, ALABAMA
SMITH SECKMAN REID, INC.

REHABILITATION OF BLDG. 4619 PHASE 1

LIGHTING PLAN

STRUCTURES & MECHANICS BLDG. - WEST END

NASA AE CONTRACT NO. NAS8-32449 FILE NO. MSFC 11829

SUBMITTED: Thomas R. Clemens AE: DATE: 1-4-78
APPROVAL RECOMMENDED: LAB: DATE: 3-31-78
APPROVED: CHIEF ENGINEERING DIVISION NASA DATE: 7/31/78
DESIGNED: W.T. CLEVENGER
DRAWN: A.J. DENAMI
CHECKED: R.E. WOOD
APPROVAL RECOMMENDED: CHIEF ELECTRICAL BRANCH
DESIGN DATE: 4/11/78
SCALE: 1/8"=1'-0"
SPEC. NO. FAC-1805
DWG NO. FAC-AY-4619-E2

REF. NO. E-2

TELECOMMUNICATIONS EQUIPMENT AFFECTED BY THIS CONTRACT WORK IS NOT TO BE ALTERED OR REMOVED BY THE CONTRACTOR. CONTACT THE COR IN THE EVENT OF A CONFLICT.
SIGNATURE R. Reeder OFFICE SYMBOL AP51 2/16/78

Ben Bayless CS21 Jan 16, 1978

MSFC MASTER BID DISK 11-18-2013

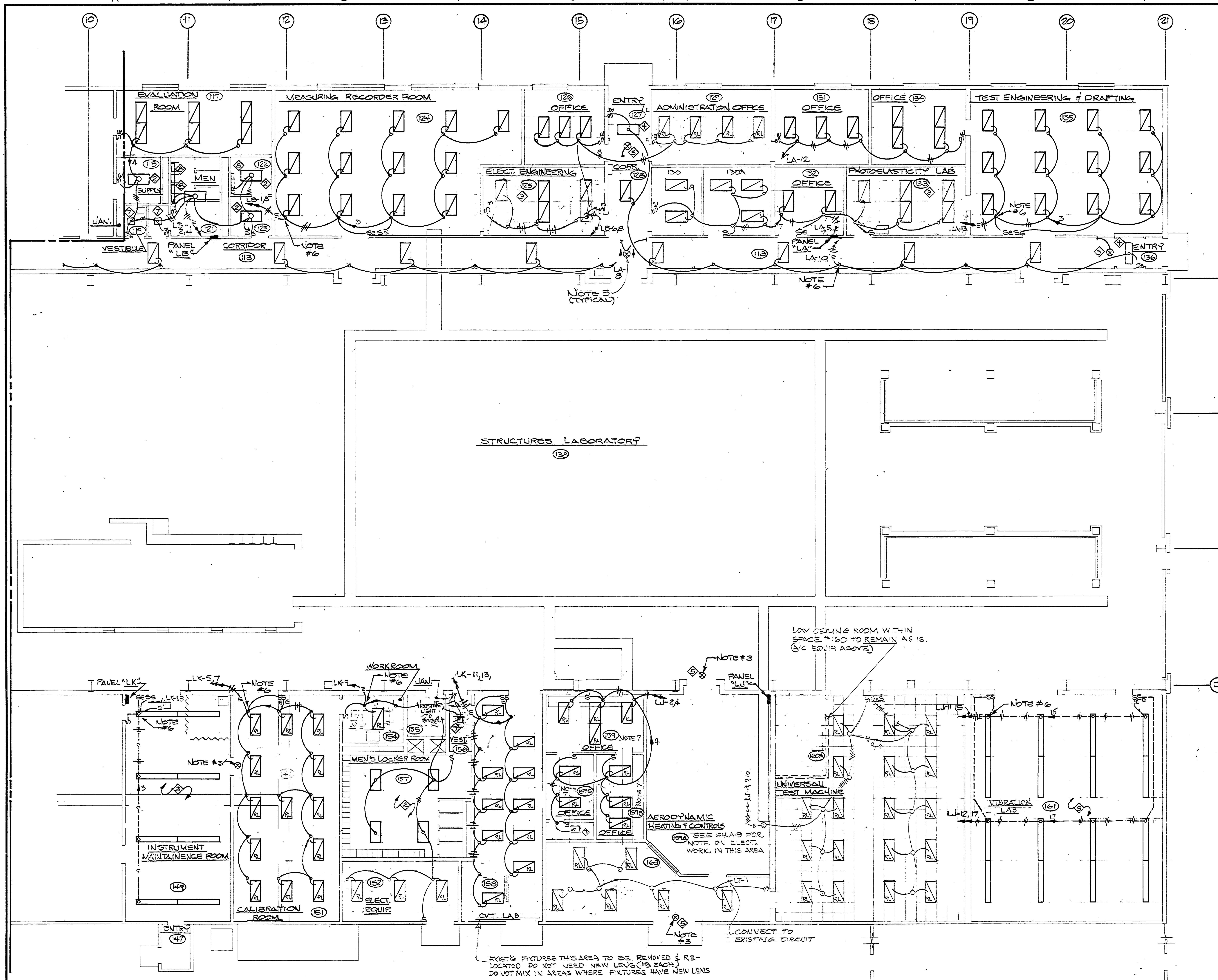

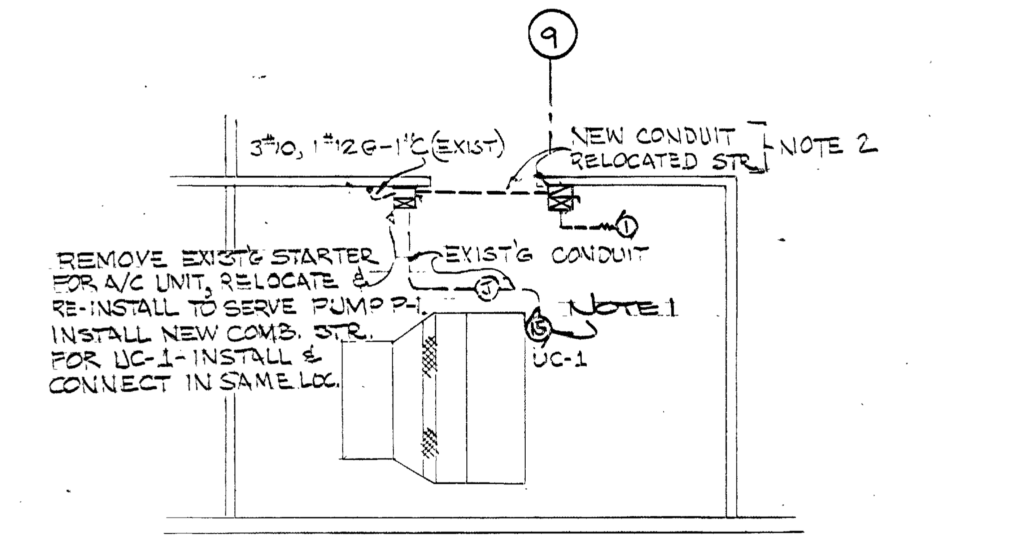

HVAC PENTHOUSE NO. BAY SPACE E134R

(LOCATED ON NORTH SIDE OF BUILDING)

NOTES:

1. REMOVE EXISTING #12AWG CONDUCTORS FROM STARTER TO MOTOR & INSTALL NEW WIRE - 3#10, 1#12G IN EXIST'G COND. & MAKE CONNECTIONS.
2. INSTALL NEW CONDUIT & WIRE (3#12, 1#12G IN 3/4"C) AS SHOWN & CONNECT TO LINE SIDE OF UC-1 STARTER SWITCH, CONNECT NEW WIRE & CONDUIT TO RELOCATED STARTER TO SERVE PUMP P-1 AS SHOWN - INSTALL NEW THERMAL OVERLOADS (3EA) IN EXIST'G ALLEN-BRADLEY BULL. #713 STR. AS REQ'D FOR PUMP P-1.
3. REPLACE EXISTING EXIT LIGHTS WITH TYPE SHOWN, RECONNECT TO EXISTING WIRING.
4. NOT USED
5. ALL FIXTURES TYPE ① UNLESS OTHERWISE NOTED.
6. APPROXIMATE LOCATION OF EXISTING JUNCTION BOX AND HOMERUN CONDUIT. REUSE BOX AND CONDUIT.
7. REMOVE EXISTING RECESSED INCANDESCENT FIXTURES PRESENTLY ON DIMMER CONTROL & REINSTALL - RECONNECT AS REQ'D IN NEW CEILING. (9 EACH).

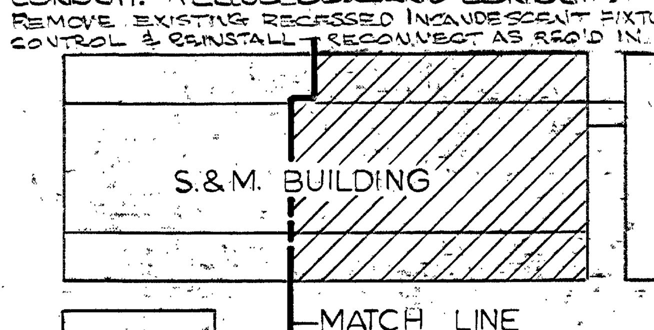

KEY PLAN
NO SCALE

TELECOMMUNICATIONS EQUIPMENT AFFECTED BY THIS CONTRACT WORK IS NOT TO BE ALTERED OR REMOVED BY THE CONTRACTOR. CONTACT THE COR IN THE EVENT OF A CONFLICT.

SIGNATURE | OFFICE SYMBOL AB51 | DATE 2/16/78

REV.	BY	DATE	REVISION	C.I. NO.	APPROVED

NATIONAL AERONAUTICS AND SPACE ADMINISTRATION
MARSHALL SPACE FLIGHT CENTER HUNTSVILLE, ALABAMA
SMITH SECKMAN REID, INC.

REHABILITATION OF BLDG. 4619 PHASE 1

LIGHTING PLAN

STRUCTURES & MECHANICS BLDG. - EAST END

NASA AE CONTRACT NO. NAS8-32449
FILE NO. MSFC 11830

SUBMITTED: — AE: DATE: 1-4-78
APPROVAL RECOMMENDED: — LAB: DATE: 3-31-78
APPROVED: CHIEF ENGINEERING DIVISION — NASA DATE: 7/31/78

DESIGNED: W.T. CLEVENGER
DRAWN: A.J. DENAMI
CHECKED: R.E. WOOD
SCALE: 1/8" = 1'-0"

APPROVAL RECOMMENDED: CHIEF, BRANCH
DESIGN DATE: 4/11/78
SPEC. NO. FAC-1805

REF. NO. E-3

DWG NO. FAC-AY-4619-E3

MSFC MASTER BID DISK 11-18-2013

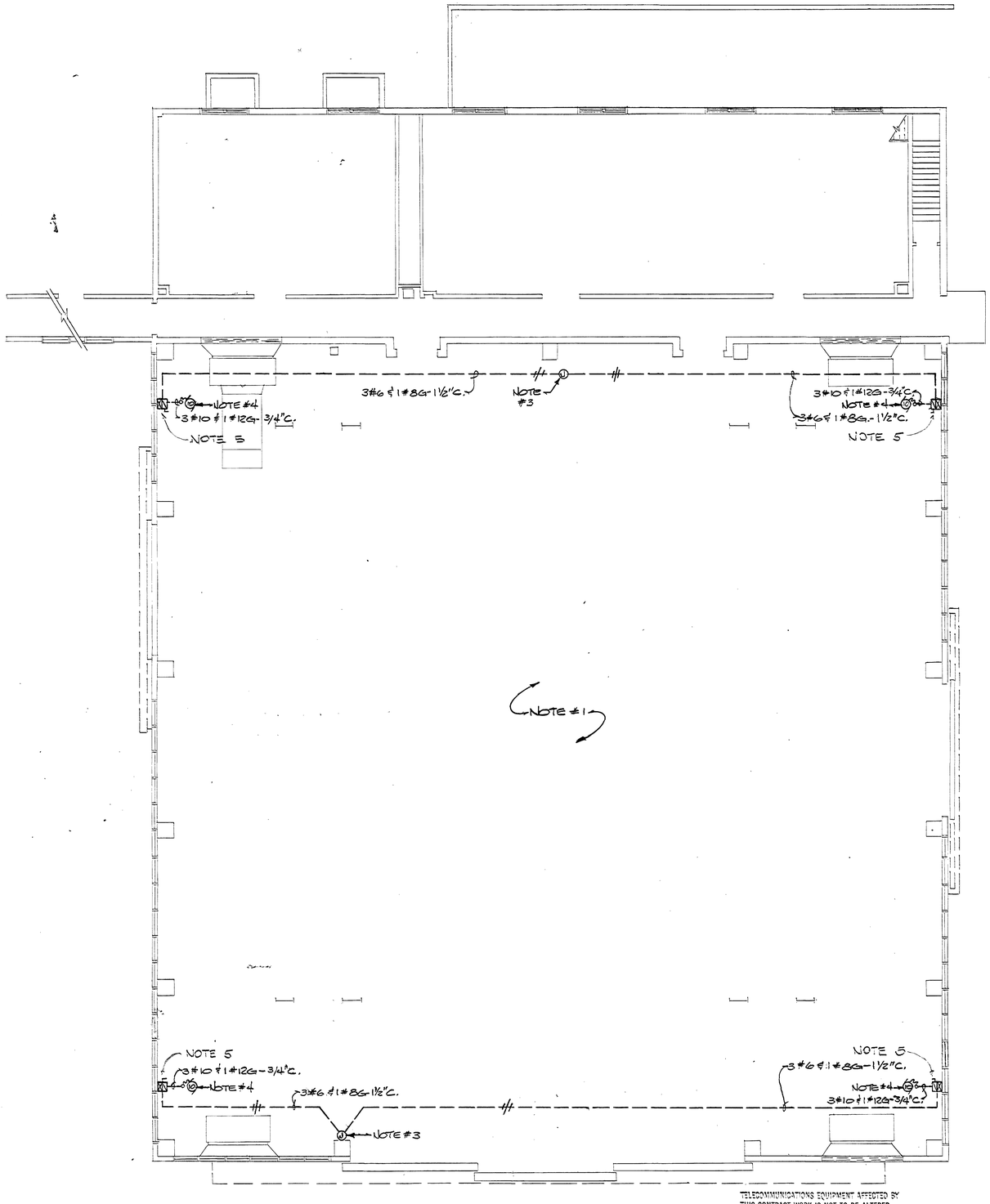

NOTES:

1. ALL WIRING PRESENTLY FEEDING EB HEATING AND VENTILATION UNITS SHALL BE REMOVED BACK TO EXIST'G JUNCTION BOXES (2) SHOWN IN PLAN THIS SHEET. CONDUIT SHALL BE REMOVED BACK TO FIRST J.B.
2. NOT USED.
3. EXISTING JUNCTION BOX AT GROUND LEVEL WITH 3#6 & 1#8G FROM MCC A1 IN BASEMENT. SPLICE EXIST'G CONDUCTORS IN J.B. & INSTALL NEW WIRE & CONDUIT FOR H&V UNITS AS SHOWN.
4. HEATING AND VENTILATION UNIT. SEE MECHANICAL DRAWINGS FOR MOUNTING HEIGHT.
5. MOUNT 5'-0" ABOVE PLATFORM.

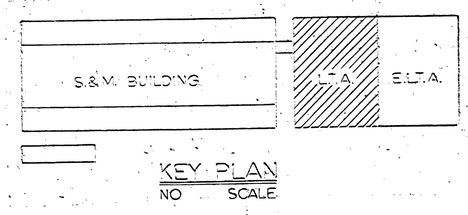

KEY PLAN
NO SCALE

REV.	BY	DATE	REVISION	C.I. NO.	APPROVED

NATIONAL AERONAUTICS AND SPACE ADMINISTRATION
MARSHALL SPACE FLIGHT CENTER HUNTSVILLE, ALABAMA
SMITH SECKMAN REID. INC.

REHABILITATION OF BLDG. 4619 PHASE 1

H&V EQUIP. POWER PLAN

LOAD TEST ANNEX

NASA AE CONTRACT NO. NAS8-32449 — FILE NO. MSFC 11831

SUBMITTED: Roger B. Chinn — AE: DATE: 1-4-78
APPROVAL RECOMMENDED: [signature] — LAB: DATE: 3-7-78
APPROVED: [signature] CHIEF ENGINEERING DIVISION — NASA: DATE: 7/31/78
DESIGNED WTC
DRAWN AJD
CHECKED REW
SCALE: 1/8"=1'-0"
APPROVAL RECOMMENDED: [signature] CHIEF, [illegible] BRANCH — DESIGN DATE: 4/11/78
SPEC. NO. FAC-1805
DWG NO. FAC-AY-4619-E4

REF. NO. E-4

TELECOMMUNICATIONS EQUIPMENT AFFECTED BY THIS CONTRACT WORK IS NOT TO BE ALTERED OR REMOVED BY THE CONTRACTOR. CONTACT THE COR IN THE EVENT OF A CONFLICT.

[signature] AT&T 2/10/78
SIGNATURE OFFICE SYMBOL DATE

Ben Bagley CSA from 1/6/1958

MSFC MASTER BID DISK 11-18-2013

DOCUMENT INPUT RECORD - MSFC DOCUMENTATION REPOSITORY

I. GENERAL INFORMATION

1. APPROVED PROJECT:	2. DOCUMENT/ DRAWING NUMBER:	3. CONTROL NUMBER:	4. RELEASE DATE:	5. SUBMITTAL DATE:
	FAC-AY-4619		07/31/1978	08/22/2006

6. DOCUMENT/DRAWING TITLE:
REHABILITATION OF BUILDING 4619, PHASE I

7. REPORT TYPE:

8. CONTRACT NUMBER / PERFORMING ACTIVITY:	9. DRD NUMBER:	10. DPD / DRL / IDRD NUMBER:
NNM05AB09C		

11. DISPOSITION AUTHORITY (Check One):
- ☐ Official Record - NRRS _____
- ☒ Reference Copy - NRRS 8/5/A/3 (destroy when no longer needed)

12. SUBMITTAL AUTHORITY:
KAREN FRANCIS / SEI
AS22

13. RELEASING AUTHORITY:

14. SPECIAL INSTRUCTIONS:

15. CONTRACTOR/SUBMITTING ORGANIZATION, ADDRESS AND PHONE NUMBER:
KAREN FRANCISSEI GROUP / AS22
BUILDING 4241, ROOM116 MSFC, AL 35/12 (256)-544-7942

16. ORIGINATING NASA CENTER:

17. OFFICE OF PRIMARY RESPONSIBILITY:

18. PROJECT CODE:	19. NUMBER OF PAGES:
02400	~~19~~ 22

II. ENGINEERING DRAWINGS

20. REVISION:	21. ENGINEERING ORDER:	22. PARTS LIST:	23. CCBD:
0			

III. REPORTS, SPECIFICATIONS, ETC.

24. REVISION:	25. CHANGE:	26. VOLUME:	27. BOOK:	28. PART:	29. SECTION:

30. ISSUE:	31. ANNEX:	32. SCN:	33. DCN:	34. AMENDMENT:

35. APPENDIX:	36. ADDENDUM:	37. CCBD:	38. CODE ID:	39. IRN:

IV. EXPORT AND DISTRIBUTION RESTRICTIONS

- ☐ Privacy Act (see MWI 1382.1)
- ☐ Proprietary (see MPD 2210.1, MPR 7120.3)
- ☐ Patent (see MPR 2220.1)
- ☐ ITAR (see MPR 2220.1, MPD 2190.1)
- ☐ EAR (see MPR 2220.1, MPD 2190.1)
- ☐ Other ACI (see NPR 1600.1, MPR 1600.1) _____
- ☒ No statutory or institutional restrictions applicable -- material may be electronically distributed to user in the NASA domain

V. DOCUMENTATION SUBMITTER (NASA OR CONTRACTOR)

40. ORG. CODE:	41. PHONE NUMBER:	42. NAME:	43. SIGNATURE/DATE:
SEI (AS22)	(256) 544-7942	KAREN FRANCIS	08/22/06 Karen Francis

MSFC MASTER BID DISK 11-18-2013

VI. TO BE COMPLETED BY MSFC DOCUMENTATION REPOSITORY

44. RECEIVED BY:	45. DATE RECEIVED:	46. WORK ORDER:
Annette Bradford	8-28-06	03-01339-6

LOCATION MAP

800 0 800 FEET

1/10 0 1/10 2/10 KM

N

BLDG. 4619 (EAST WING)

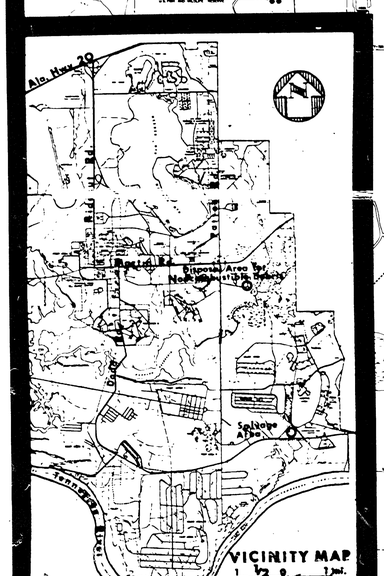

INDEX OF DRAWINGS

A-1	LOCATION MAP, INDEX OF DRAWINGS
A-2	SOUTH ELEVATION, PLAN SECTION
A-3	SECTIONS, DETAILS

"TELECOMMUNICATIONS EQUIPMENT AFFECTED BY THIS CONTRACT WORK IS NOT TO BE ALTERED OR REMOVED BY THE CONTRACTOR, CONTACT THE COR IN THE EVENT OF A CONFLICT."

Jack Hall 6/1/81
SIGNATURE OF THE OWNER DATE

Jack Hall (C521) 6/1/81

REV.	BY	DATE	REVISION	C.I. NO.	APPROVED

NATIONAL AERONAUTICS AND SPACE ADMINISTRATION

MARSHALL SPACE FLIGHT CENTER HUNTSVILLE, ALABAMA

SIZEMORE FLOYD, ARCHITECTS & ENERGY PLANNERS - ATLANTA

PASSIVE HEATING SYSTEM
EAST WING - BUILDING 4619

LOCATION MAP, INDEX OF DRAWINGS

NASA AE CONTRACT NO. NAS8-33321			FILE NO. MSFC
SUBMITTED: JEFF FLOYD	APPROVAL RECOMMENDED:		APPROVED:
AS: DATE: E-27-81	LAB: DATE:	5/19/81	CHIEF: DATE: 6/16/81
DESIGNED J.E. DRAWN J.E. CHECKED J.F.	APPROVAL RECOMMENDED: CHIEF, ARCHITECTURAL BRANCH		NASA: DATE: DWG NO. FAC-BF-4619-A1
SCALE: AS NOTED	DESIGN DATE: E-29-81		
REF. NO. A-1	SPEC. NO. FAC-270		

MSFC MASTER BID DISK 11-18-2013

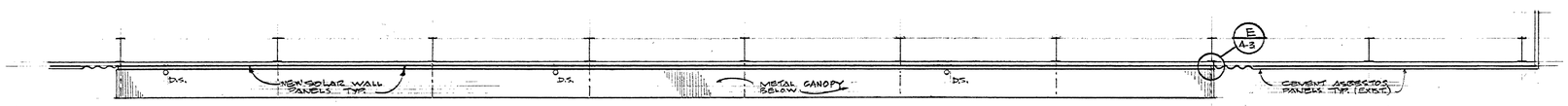

A A-2 PLAN SECTION CANOPY
1/8" = 1'-0"

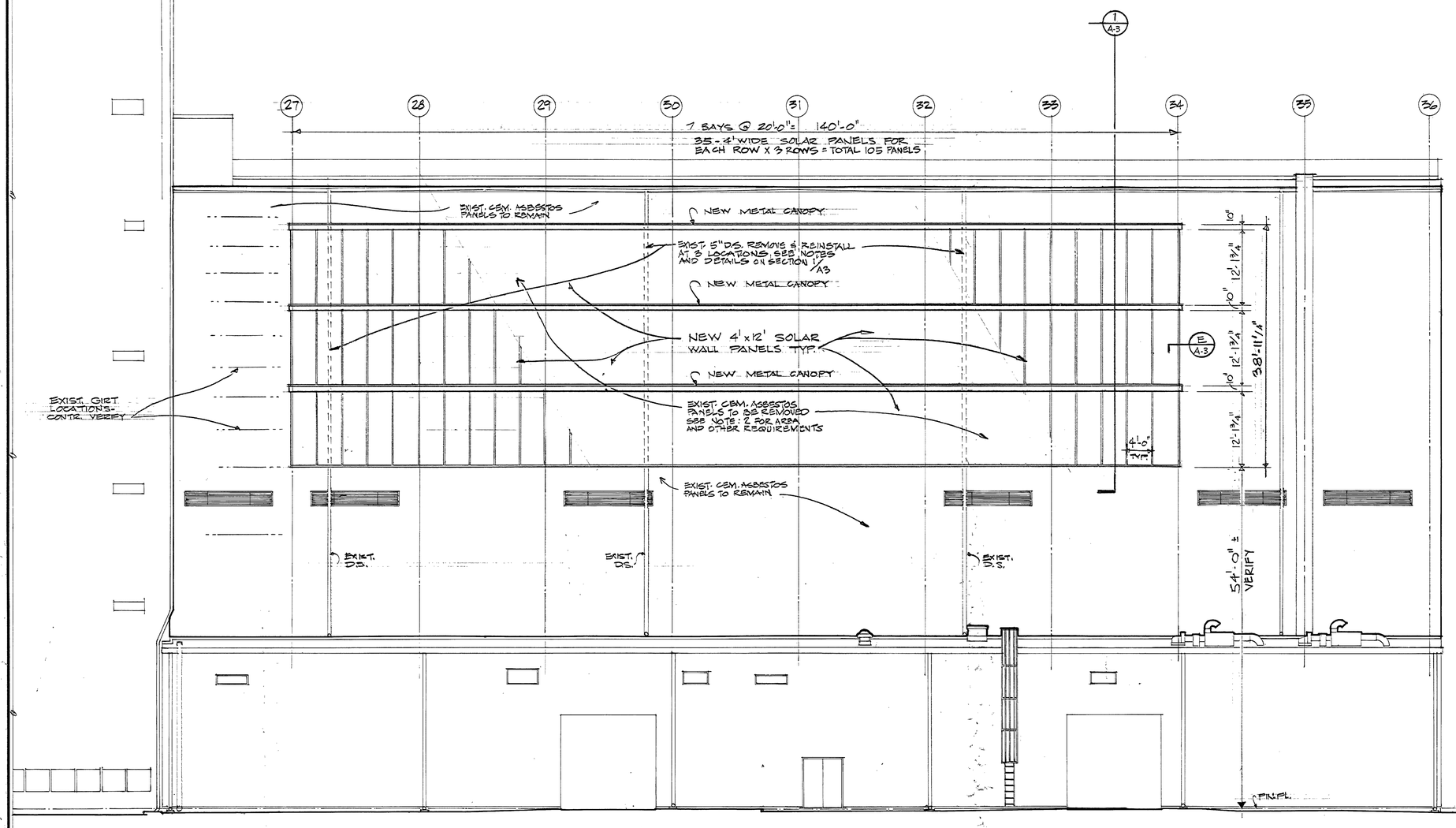

B A-2 ELEVATION (SOUTH)
1/8" = 1'-0"

NOTE:
1. EXISTING DOWNSPOUTS "D.S." - REMOVE AND RE-INSTALL - CUT OUT IN NEW GARBISS TO BE MIN. FOR D.S. PASS-THROUGH. SEAL FULL PERIMETER.

2. CONTRACTOR SHALL REMOVE EXISTING CEMENT ASBESTOS PANELS IN AREA 140' x 38'-11 1/4" IN COMPLIANCE WITH O.S.H.A. STANDARDS. (USE VACUUM CLEANER BOTH SIDES OF SAW CUT) NO CUTTING DURING REGULAR NASA WORKING HRS WITHOUT PRIOR WRITTEN APPROVAL. (WET PANELS THOROUGHLY WITH WATER BEFORE SAWING) REUSE REMOVED CEMENT ASBESTOS PANELS TO REPLACE DAMAGED PANELS AND TO COVER ALL OPENINGS WHICH REQUIRE CLOSURE IN WORK AREA.

TELECOMMUNICATIONS EQUIPMENT AFFECTED BY THIS CONTRACT WORK IS NOT TO BE ALTERED OR REMOVED BY THE CONTRACTOR. CONTACT THE COR IN THE EVENT OF A CONFLICT.

R A Cahill AS51 6/1/81
SIGNATURE OFFICE SYMBOL DATE

Jack Walker CS21 6/1/81

REV.	BY	DATE	REVISION	C.I. NO.	APPROVED

NATIONAL AERONAUTICS AND SPACE ADMINISTRATION
MARSHALL SPACE FLIGHT CENTER HUNTSVILLE, ALABAMA
SIZEMORE, FLOYD, ARCHITECTS & ENERGY PLANNERS - ATLANTA

PASSIVE HEATING SYSTEM
EAST WING - BUILDING 4619
SOUTH ELEVATION, PLAN SECTION

NASA AE CONTRACT NO. NAS8-33321 FILE NO. MSFC

SUBMITTED: JEFF FLOYD
APPROVAL RECOMMENDED: E. F. Madison
APPROVED: Chief, Engineering Division
AE: DATE: 5-27-81
LAB: DATE: 6/1/81
NASA: DATE: 6/1/81

REF. NO. A-2
DESIGNED J.P.
DRAWN J.R.
CHECKED T.P.
SCALE: AS NOTED
APPROVAL RECOMMENDED: Chief, Architectural Branch
DESIGN DATE: 5-29-81
SPEC. NO. PAC-2120
DWG NO. PAC-BF-4619-A2

MSFC - FORM 235 REV. 7-71

MSFC MASTER BID DISK 11-18-2013

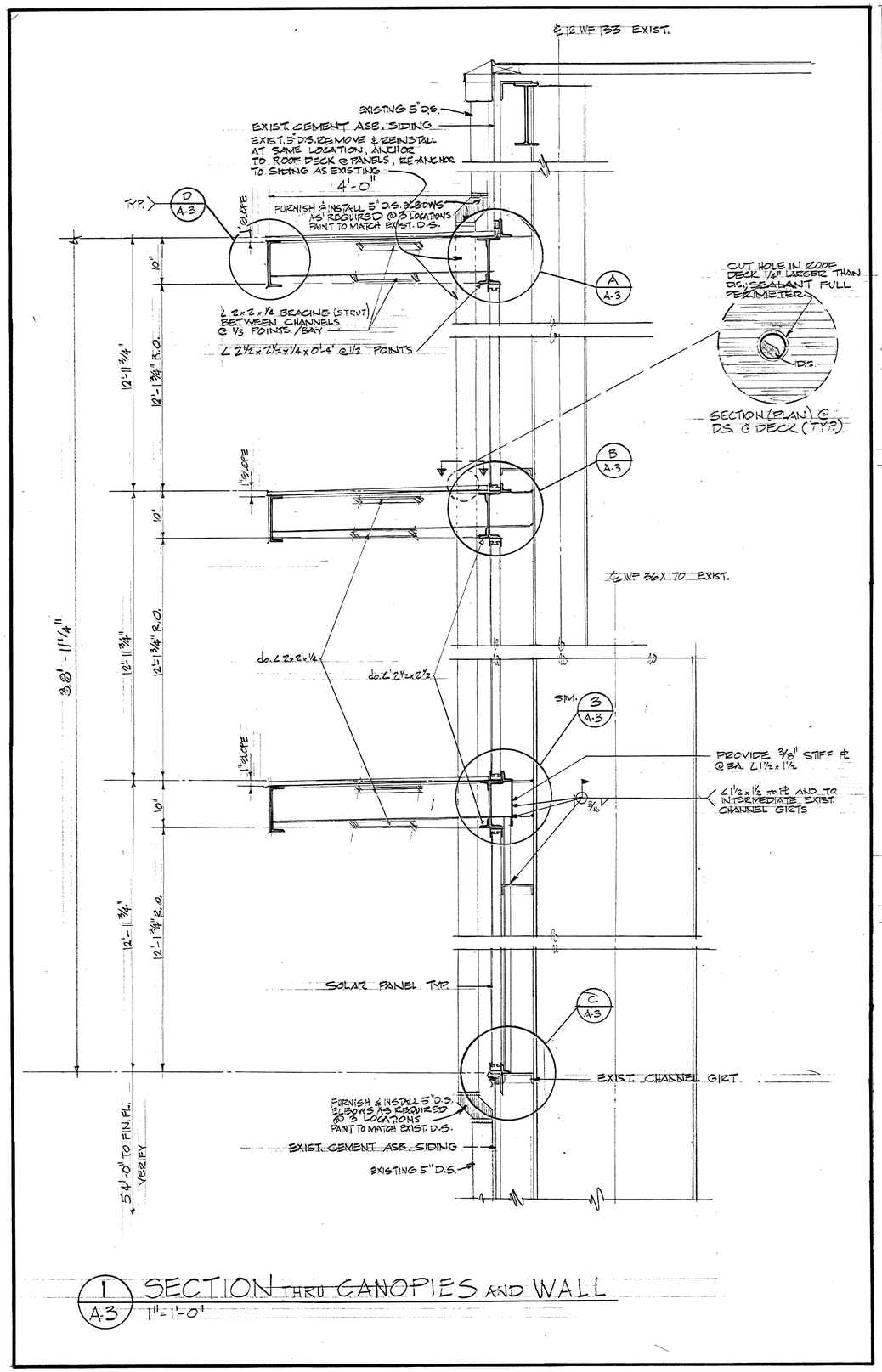

1 A-3 SECTION THRU CANOPIES AND WALL 1"=1'-0"

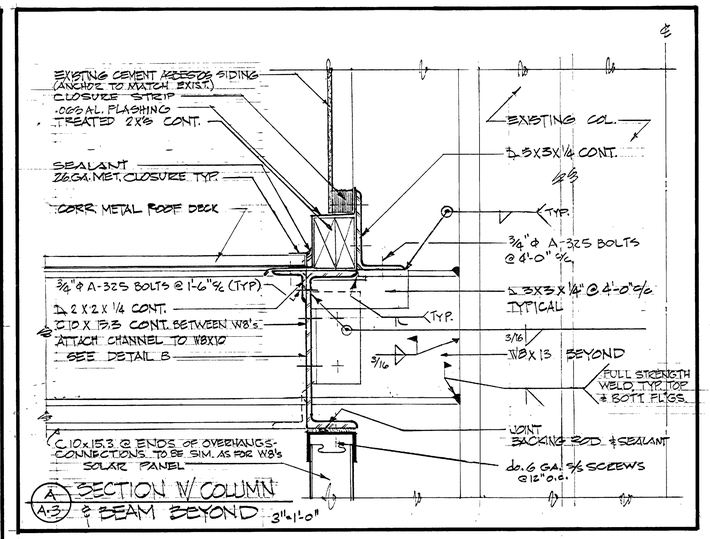

A A-3 SECTION W/ COLUMN & BEAM BEYOND 3"=1'-0"

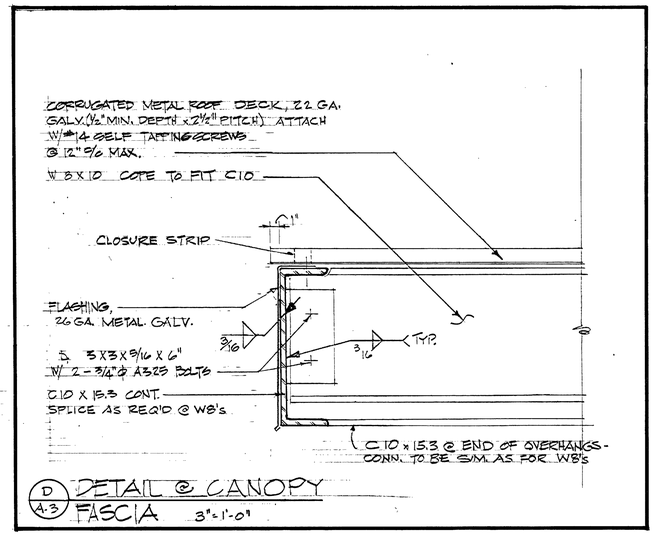

D A-3 DETAIL @ CANOPY FASCIA 3"=1'-0"

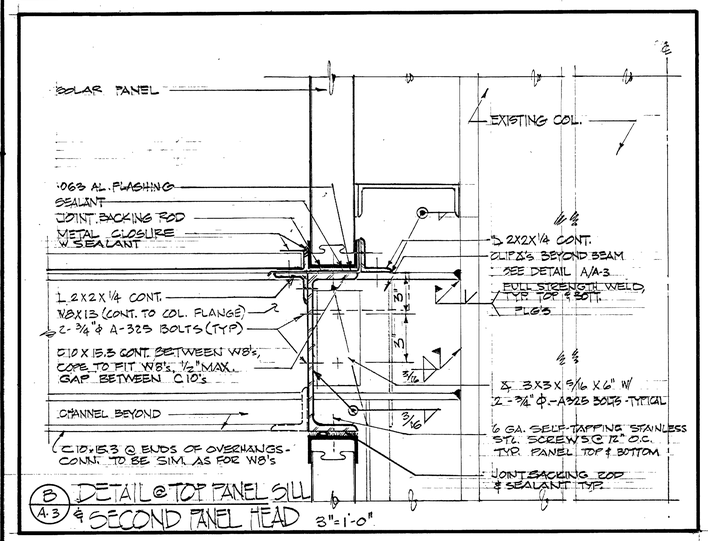

B A-3 DETAIL @ TOP PANEL SILL & SECOND PANEL HEAD 3"=1'-0"

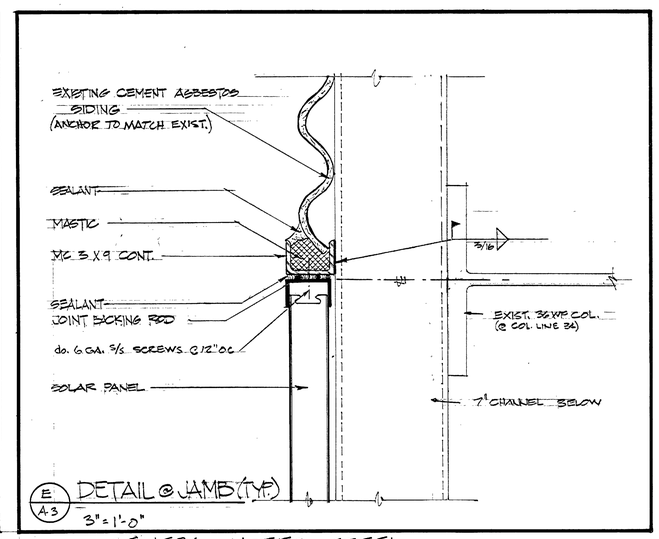

E A-3 DETAIL @ JAMB (TYP.) 3"=1'-0"

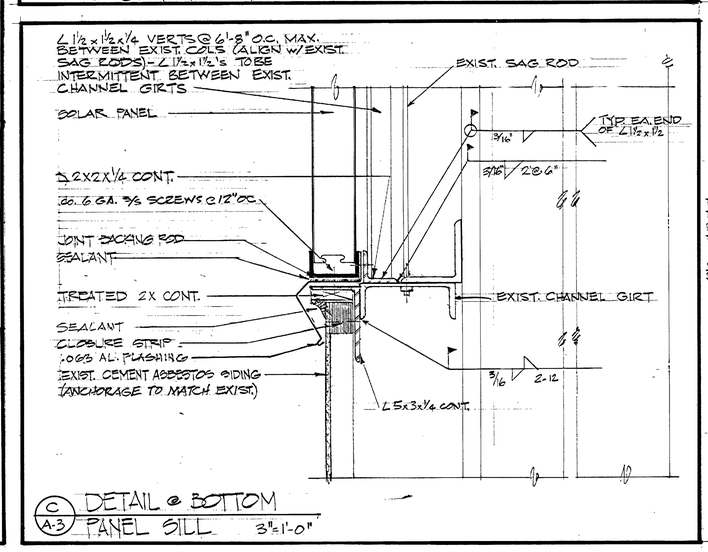

C A-3 DETAIL @ BOTTOM PANEL SILL 3"=1'-0"

GENERAL NOTES - STEEL

1. STRUCTURAL STEEL SHALL CONFORM TO ASTM A-36.
2. STRUCTURAL STEEL FABRICATION & ERECTION SHALL BE IN ACCORDANCE WITH THE LATEST A.I.S.C. SPECIFICATIONS & STANDARDS. WELDING SHALL CONFORM TO A.W.S. D1.1
3. BOLTED FIELD CONNECTIONS SHALL BE WITH 3/4" ϕ A-325 BOLTS, EXCEPT METAL DECK TO BE CONNECTED WITH 3/8" ϕ A-307 BOLTS @ 18" O.C.
4. SOLAR PANELS SHALL BE FASTENED TO GIRTS TO WITHSTAND A WIND PRESSURE OF 30 PSF. SHOP DRAWINGS SHALL BE SUBMITTED FOR REVIEW SHOWING THE FASTENING DETAILS & CALCULATIONS.

TELECOMMUNICATIONS EQUIPMENT AFFECTED BY THIS CONTRACT WORK IS NOT TO BE ALTERED OR REMOVED BY THE CONTRACTOR. CONTACT THE COR IN THE EVENT OF A CONFLICT.

D Larkin 6/1/81 AP51
SIGNATURE OFFICE SYMBOL DATE

REV.	BY	DATE	REVISION	C.I. NO.	APPROVED

NATIONAL AERONAUTICS AND SPACE ADMINISTRATION
MARSHALL SPACE FLIGHT CENTER HUNTSVILLE, ALABAMA
SIZEMORE FLOYD, ARCHITECTS & ENERGY PLANNERS - ATLANTA

PASSIVE HEATING SYSTEM EAST WING - BUILDING 4619

SECTIONS, DETAILS

NASA AE CONTRACT NO. NAS8-33321 — FILE NO. MSFC

SUBMITTED: JEFF FLOYD — APPROVAL RECOMMENDED: O F Griffin — APPROVED: Chief Engineering Division

AE: DATE: 5-27-81 — LAR: DATE: 6/1/81 — NASA: DATE: 6/16/81

REF. NO. A-3

DESIGNED J.F. DRAWN J.R. CHECKED T.P.

APPROVAL RECOMMENDED: Jack Walker 6/1/81 CHIEF, ARCHITECTURAL BRANCH

DESIGN DATE: 5-29-81

SCALE: AS NOTED SPEC. NO. EAC-2129

DWG NO. FAC-BF-4619-A3

MSFC - FORM 238 REV. 7-71)

MSFC MASTER BID DISK 11-18-2013

DOCUMENT INPUT RECORD - MSFC DOCUMENTATION REPOSITORY

I. GENERAL INFORMATION

1. APPROVED PROJECT:	2. DOCUMENT/ DRAWING NUMBER:	3. CONTROL NUMBER:	4. RELEASE DATE:	5. SUBMITTAL DATE:
Facilities	FAC-BF-4619		06/16/1981	08/22/2006

6. DOCUMENT/DRAWING TITLE:	7. REPORT TYPE:
PASSIVE HEATING SYSTEM	

8. CONTRACT NUMBER / PERFORMING ACTIVITY:	9. DRD NUMBER:	10. DPD / DRL / IDRD NUMBER:
NNM05AB09C		

11. DISPOSITION AUTHORITY (Check One):	12. SUBMITTAL AUTHORITY:	13. RELEASING AUTHORITY:
☐ Official Record - NRRS _____ ☒ Reference Copy - NRRS 8/5/A/3 (destroy when no longer needed)	KAREN FRANCIS / SEI AS22	

14. SPECIAL INSTRUCTIONS:

15. CONTRACTOR/SUBMITTING ORGANIZATION, ADDRESS AND PHONE NUMBER:	16. ORIGINATING NASA CENTER:
KAREN FRANCISSEI GROUP / AS22 BUILDING 4241, ROOM116 MSFC, AL 35/12 (256)-544-7942	17. OFFICE OF PRIMARY RESPONSIBILITY:

18. PROJECT CODE:	02400	19. NUMBER OF PAGES:	3

II. ENGINEERING DRAWINGS

20. REVISION:	21. ENGINEERING ORDER:	22. PARTS LIST:	23. CCBD:
0			

III. REPORTS, SPECIFICATIONS, ETC.

24. REVISION:	25. CHANGE:	26. VOLUME:	27. BOOK:	28. PART:	29. SECTION:

30. ISSUE:	31. ANNEX:	32. SCN:	33. DCN:	34. AMENDMENT:

35. APPENDIX:	36. ADDENDUM:	37. CCBD:	38. CODE ID:	39. IRN:

IV. EXPORT AND DISTRIBUTION RESTRICTIONS

☐ Privacy Act (see MWI 1382.1)
☐ Proprietary (see MPD 2210.1, MPR 7120.3)
☐ Patent (see MPR 2220.1)
☐ ITAR (see MPR 2220.1, MPD 2190.1)
☐ EAR (see MPR 2220.1, MPD 2190.1)
☐ Other ACI (see NPR 1600.1, MPR 1600.1) _____
☒ No statutory or institutional restrictions applicable -- material may be electronically distributed to user in the NASA domain

V. DOCUMENTATION SUBMITTER (NASA OR CONTRACTOR)

40. ORG. CODE:	41. PHONE NUMBER:	42. NAME:	43. SIGNATURE/DATE:
SEI (AS22)	(256) 544-7942	KAREN FRANCIS	08/22/06 Karen Francis

VI. TO BE COMPLETED BY MSFC DOCUMENTATION REPOSITORY

MSFC MASTER BID DISK 11-18-2013

44. RECEIVED BY:	45. DATE RECEIVED:	46. WORK ORDER:
Kim Miller	8/25/06	03-01333-6

LOCATION MAP

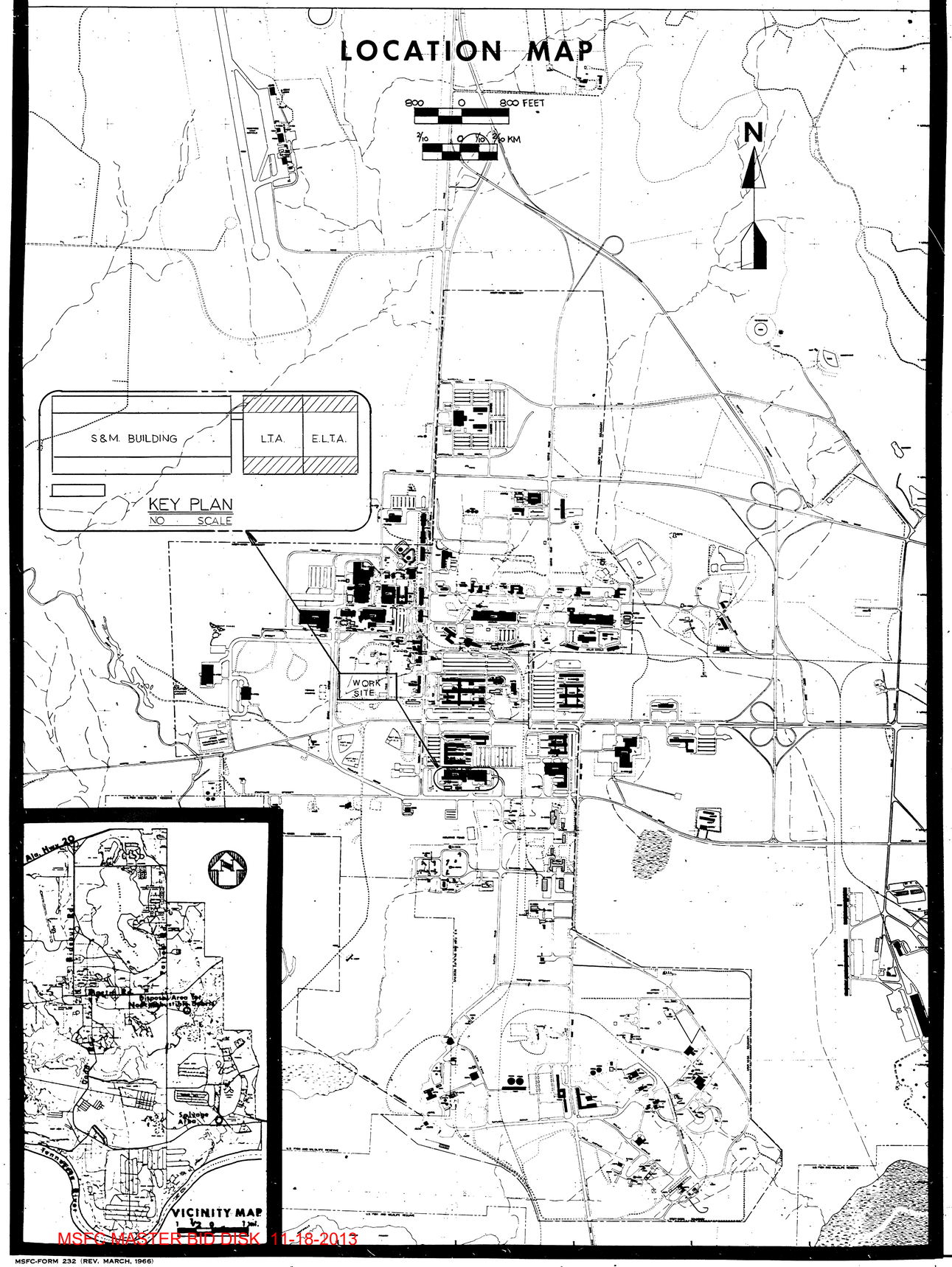

INDEX OF DRAWINGS

DWG. NO.	TITLE
FAC – BD – 4619 – X1	REHAB OF BLDG 4619 PH2 – LOCATION MAP AND INDEX SHEET
FAC –BD – 4619 – A1	REHAB OF ELTA & LTA – BLDG 4619 – PH2 FIRST FLOOR PLAN – ELTA
FAC – BD – 4619 – A2	REHAB OF ELTA & LTA – BLDG 4619 – PH2 PARTIAL 1st FLOOR PLAN – LTA & 2nd FLOOR PLAN ELTA
FAC – BD – 4619 – A3	REHAB OF ELTA & LTA –BLDG 4619 PH2 EXTERIOR ELEVATIONS & DETAILS
FAC – BD – 4619 – A4	REHAB OF ELTA & LTA – BLDG 4619 PH2 – SCHEDULE & DETAIL
FAC – BD – 4619 – A5	REHAB OF ELTA & LTA – BLDG 4619 PH2 – REFLECTED CEILING
FAC – BD – 4619 – A6	REHAB OF ELTA & LTA – BLDG 4619 PH2 – REFLECTED CEILING
FAC – BD – 4619 – M1	REHAB OF BLDG 4619 PH2 – HVAC ELTA BLDG 1 st FLOOR
FAC – BD – 4619 – M2	REHAB OF BLDG 4619 PH2 – HVAC ELTA BLDG 2nd FLOOR & BASEMENT EQUIP ROOM
FAC – BD – 4619 – M3	REHAB OF BLDG 4619 PH2 – HVAC LTA BASEMENT FLOOR
FAC – BD – 4619 – E1	REHAB OF BLDG 4619 PH2 – ELTA FIRST FLOOR LIGHTS
FAC – BD – 4619 – E2	REHAB OF 4619 PH2 – ELTA 2nd FLOOR LIGHT
FAC – BD – 4619 – E3	REHAB OF BLDG 4619 PH2 – LTA OFFICE LIGHT
FAC – BD – 4619 – E4	REHAB OF BLDG 4619 PH2 – S & M HI BAY – EAST END
FAC – BD – 4619 – E5	REHAB OF BLDG 4619 PH2 – S & M HI BAY – WEST END
FAC – BD – 4619 – E6	REHAB OF BLDG 4619 PH2 – TEST STAND. LIGHTING – LTA

REV.	BY	DATE	REVISION	C.I. NO.	APPROVED

NATIONAL AERONAUTICS AND SPACE ADMINISTRATION

MARSHALL SPACE FLIGHT CENTER HUNTSVILLE, ALABAMA

SMITH SECKMAN REID, INC.

REHABILITATION OF BLDG. 4619 PHASE 2
LOCATION MAP & DRAWING INDEX

NASA AE CONTRACT NO. NAS8-33041 FILE NO. MSFC 12060

SUBMITTED: Kay R. Chris — AE: DATE: 12-21-79
APPROVAL RECOMMENDED: — LAR: DATE:
APPROVED: E. Pennington — CHIEF, NASA: DATE: 2/14/80

REF. NO. X-1

DESIGNED RRC
DRAWN J.G.
CHECKED RRC
SCALE: SHOWN

APPROVAL RECOMMENDED: — CHIEF, DESIGN DATE, SPEC. NO.

DWG NO. FAC-BD-4619-X1

MSFC MASTER BID DISK 11-18-2013

FOR CONTINUATION SEE SHT. A-2 L.T.A. FIRST FLOOR

LAB - 115 | LAB - 116 | LAB - 117 | OFFICE - 122 | VEST. - 137 | OFFICE - 124 | OFFICE - 127 | OFFICE - 128 | OFFICE - 130 | OFFICE - 132A | OFFICE 133

LOBBY - 137-A

CORR. - 131

CORRIDOR - 131

STAIR - 2

LAB - 114 | LAB - 118 | M.T. - 119 | ANTE - 121 | W.T. - 120 | JAN 123 | STAIR - 1 | OFF. - 125 | OFF. - 126 | CONF. - 129 | OFF. - 132 | OFF. - 134

NOTE: CONTRACTOR CO-ORDINATE LOCATION OF CONCRETE FOOTINGS WITH DETAILS SHOWN ON DWGS A-3 & A-4

NOTE: PROVIDE EXP. JT. @ EXIST. BLDG. & STAIR LANDING FOOTING

EXIST. FTG.

EXP. JT.

NEW CONC. PAD, 4" THK.

6'-6"

5'-6 3/4"

6'-0"

1ST & 2ND FLOOR (ALL THIS WINDOW PROJECT)

WINDOW BLINDS TO BE REMOVED. REMOVE BLINDS, CLEAN, RETAPE, REPLACE BROKEN SLATS, CORDS, AND AS NECESSARY TO ACHIEVE AN OPERABLE CONDITION. REPLACEMENT PARTS TO MATCH EXISTING. REHANG BLINDS (TYP ALL WINDOWS WHERE BLINDS EXIST).

NOTE: INFILL THE DEPRESSED AREAS OF THE EXISTING CONC. FL. SLABS IN ROOMS 117, 118, 122, 131 & 137A (AREAS WITH CROSS HATCH OUTLINE) WITH DURALITH (THE VOUGHT CO., INC., CLEVELAND, OHIO.) OR AN APPROVED EQUAL APPLY ACCORDING TO MFG. INSTRUCTIONS. REPAIRED AREAS SHALL BE LEVEL.

△ ... DAMAGED AND/OR CRACKED FL. TILE IN ROOMS 117, 118, 122 & 131 SHALL BE REMOVED & THE MATCHING EXISTING. (SELECTION BY NASA ARCHITECT)

... ALL FL. TILE IN THIS AREA △ TO BE NEW (SELECTION BY NASA ARCHITECT)

HIGH BAY - 100

LAB - 101 | LAB - 102 | LAB - 103 | STOR. - 105 | CORR. 106 | COMPUTER - 108 | LAB - 110 | COMPUTER - 112 | LAB - 113

LOCKERS - 104 | MEN T. - 107 | SOFT RM - 111 | HARD RM - 138

FIRST FLOOR PLAN - E.L.T.A.

SCALE - 1/8" = 1'-0"

ABSI 12/1/79

Jack Walker CSI-21 12/21/79

NORTH

S&M | L.T.A. | E.L.T.A.

REV.	BY	DATE	REVISION	CI. NO.	APPROVED
△		11-30-81	REVISED PER RED LINE-AS BUILT	V-32	

NATIONAL AERONAUTICS AND SPACE ADMINISTRATION
MARSHALL SPACE FLIGHT CENTER HUNTSVILLE, ALABAMA
SMITH SECKMAN REID, INC.

REHABILATATION OF E.L.T.A. & L.T.A.
BUILDING 4619 - PHASE 2
FIRST FLOOR PLAN-E.L.T.A.

NASA AE CONTRACT NO. NAS8 - 33041
FILE NO. MSFC 12061

SUBMITTED: Roger R. Chase — AE: DATE: 9-6-79
APPROVAL RECOMMENDED: B. W. Wilmore — LAB: DATE: 10/5/80
APPROVED: CHIEF ENGINEERING DIVISION — NASA: DATE: 2/14/80

REF. NO. A-1

DESIGNED F.T.V.
DRAWN F.T.V.
CHECKED LAS.
SCALE: SHOWN

APPROVAL RECOMMENDED: CHIEF, ARCHITECTURAL BRANCH
DESIGN DATE: 1-10-80
SPEC. NO. MSC-DOC1

DWG NO. MSC-BD-4619 A-1

MSFC - FORM 250 (REV. 7-70)

MSFC MASTER BID DISK 11-18-2013

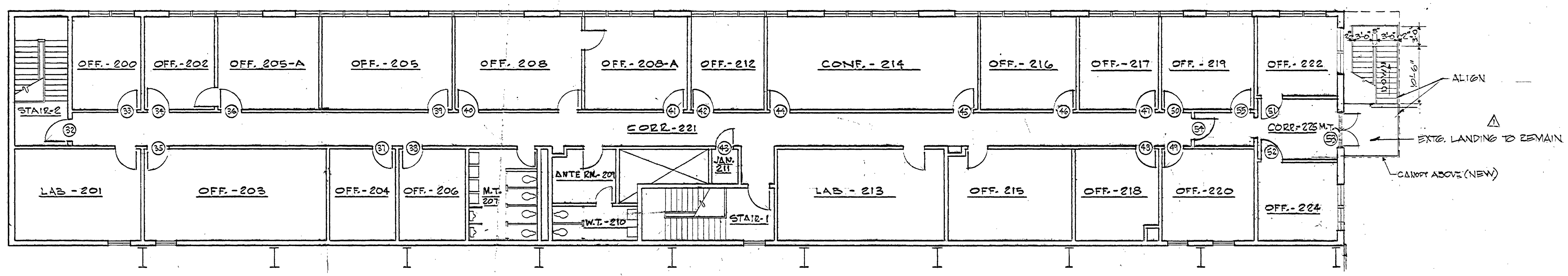

SECOND FLOOR PLAN-OFFICES-E.L.T.A.
SCALE - 1/8" = 1'-0"

FOR CONTINUATION SEE SHT. A-1 FIRST FLOOR E.L.T.A.

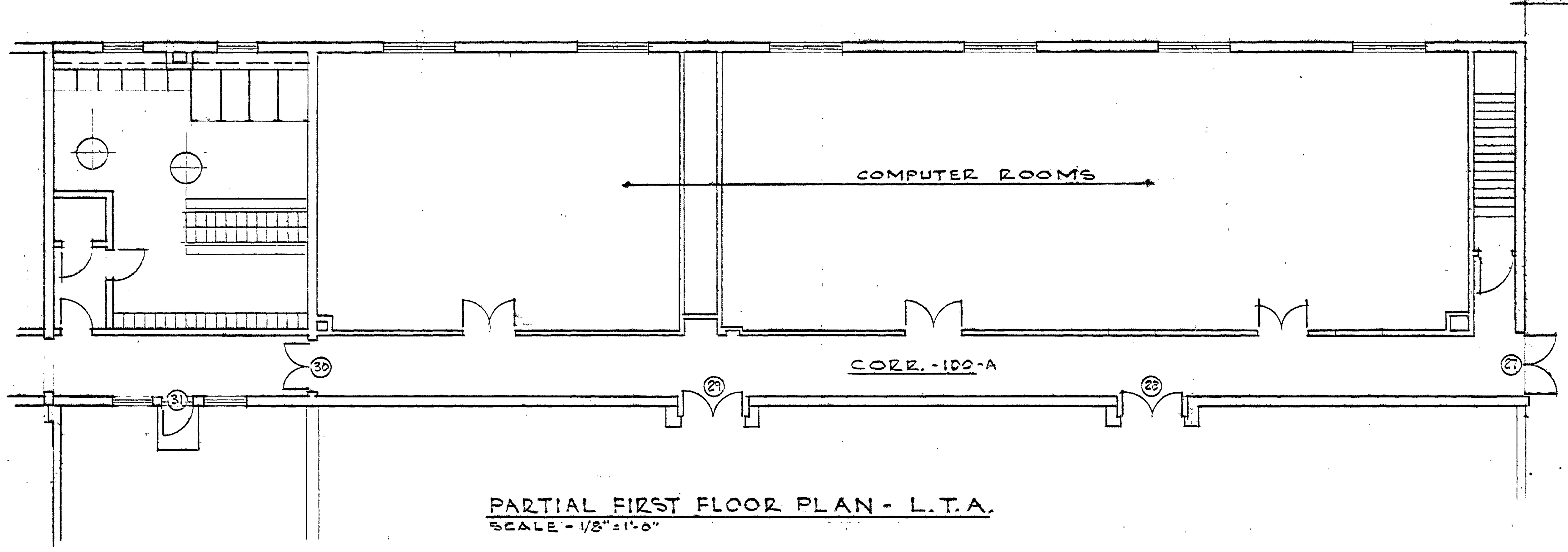

PARTIAL FIRST FLOOR PLAN - L.T.A.
SCALE - 1/8" = 1'-0"

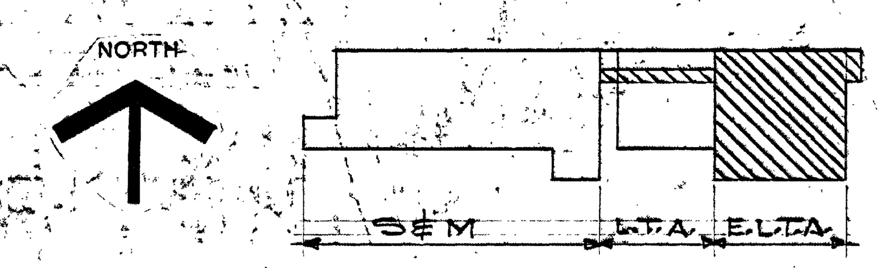

REV.	BY	DATE	REVISION	C.I. NO.	APPROVED
1		11-25-81	REVISED PER RED LINE-AS BUILT	V-3	

NATIONAL AERONAUTICS AND SPACE ADMINISTRATION
MARSHALL SPACE FLIGHT CENTER HUNTSVILLE, ALABAMA

SMITH SECKMAN REID, INC.

REHABILATATION OF E.L.T.A. & L.T.A.
BUILDING 4619 - PHASE 2
PARTIAL FIRST FLOOR PLAN - L.T.A. &
SECOND FLOOR PLAN - E.L.T.A.

NASA AE CONTRACT NO. NAS8-33041
FILE NO. MSFC 12062

SUBMITTED: Roger R. Chase — AE: DATE: 9-6-79
APPROVAL RECOMMENDED: — LAB: DATE: 10 Jan 80
APPROVED: CHIEF ENGINEERING DIVISION — NASA DATE: 2/14/80
DESIGNED F.T.V.
DRAWN F.T.V.
CHECKED LAS
SCALE: SHOWN
APPROVAL RECOMMENDED: CHIEF ARCHITECTURAL BRANCH
DESIGN DATE: 1-10-80
SPEC. NO. FAC-2001
REF. NO.
A-2
DWG NO. FAC-BD-4619-A2

Jack Walker CS-21 12-21-79

TELECOMMUNICATIONS EQUIPMENT AFFECTED BY THIS CONTRACT WORK IS NOT TO BE ALTERED OR REMOVED BY THE CONTRACTOR. CONTACT THE COR IN THE EVENT OF A CONFLICT.

SIGNATURE AB51 12/11/79
OFFICE SYMBOL DATE

MSFC-FORM 231 (REV. 7-71)

MSFC MASTER BID DISK 11-18-2013

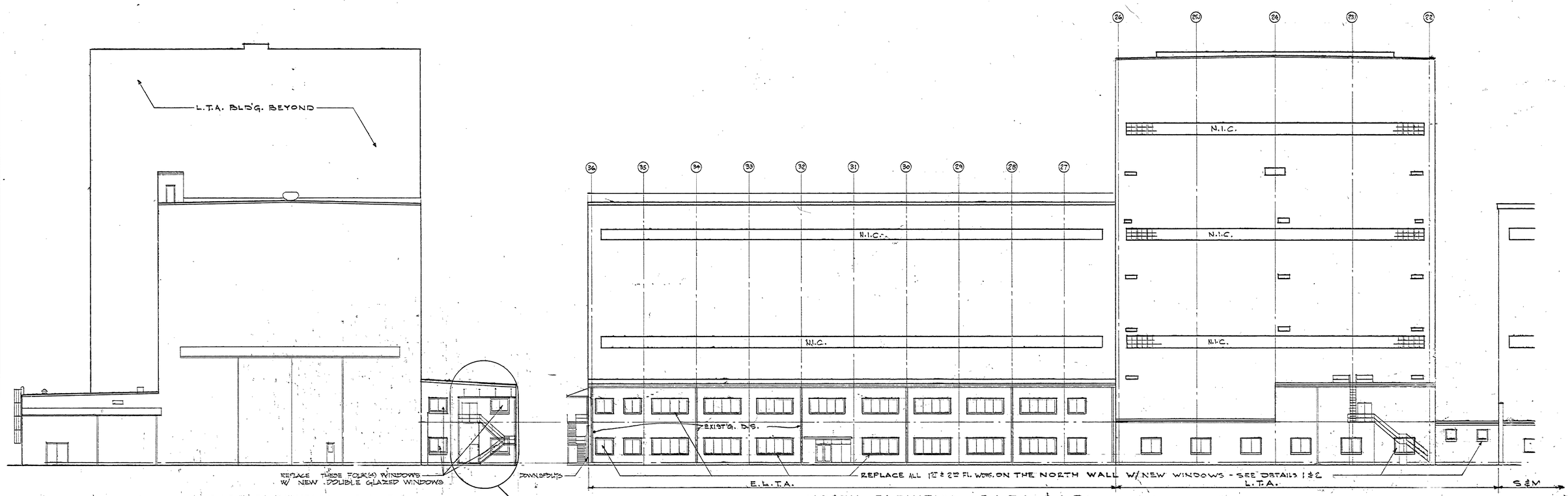

EAST ELEVATION - E.L.T.A.
SCALE - 1/16" = 1'-0"

NORTH ELEVATION - E.L.T.A. & L.T.A.
SCALE - 1/16" = 1'-0"

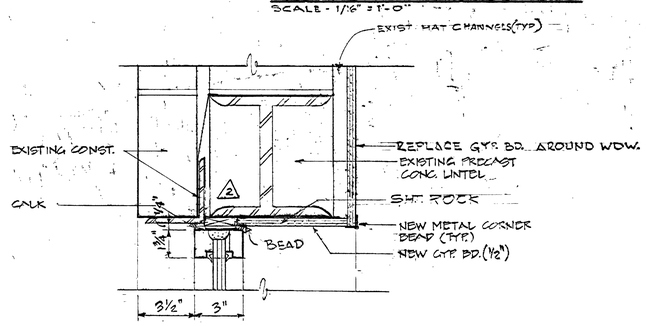

NOTE: THE CLEAR ANNODIZED ALUM. FRAME SHALL MATCH THE NEW ALUM. FRAME ON THE WEST END (S&M) OF THE BUILDING.

1 WINDOW DETAIL AT E.L.T.A.
SCALE : 3"=1'-0"

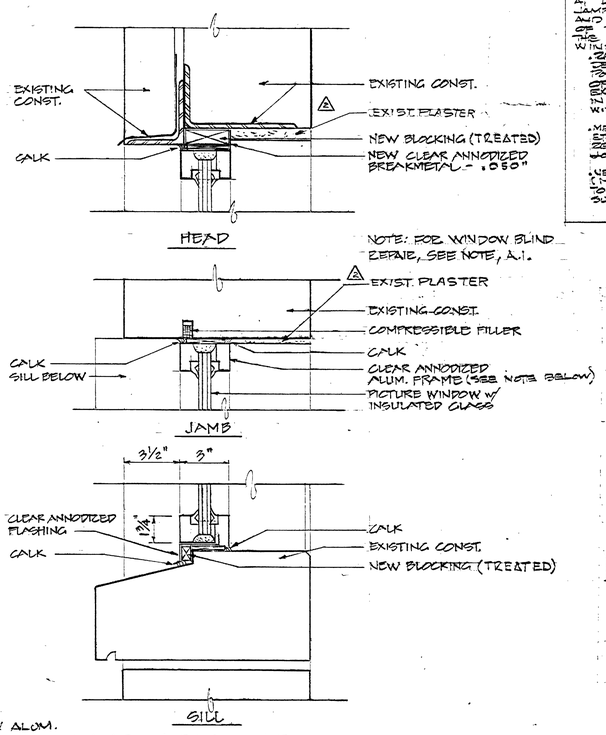

2 WINDOW DETAIL AT L.T.A.
SCALE : 3"=1'-0"

REPAIRS @ L.T.A. WINDOWS:

1. REPAIR ALL EXISTING PLASTER AT L.T.A. WINDOWS (HEADS, JAMBS AND SILLS) DAMAGED AND ALTERED BY THE REMOVAL OF THE OLD WINDOWS AND THE INSTALLATION OF THE NEW WINDOWS.
   - REMOVE & REPLACE ALL DEFECTIVE PLASTER WITH PORTLAND CEMENT PLASTER OF SAME THICKNESS AS EXISTING PLASTER. APPLY IN THREE (3) APPLICATIONS WITH A 1/8"-(INCH) FINISH COAT.
   - METAL LATH, CORNER BEADS, TIES, ETC. SHALL BE FURNISHED AS REQUIRED FOR A COMPLETE WORK.
   - NEW PLASTER SHALL BE PAINTED (1-PRIME COAT & 2- FINISH COATS) TO MATCH EXISTING ADJACENT SURFACES.

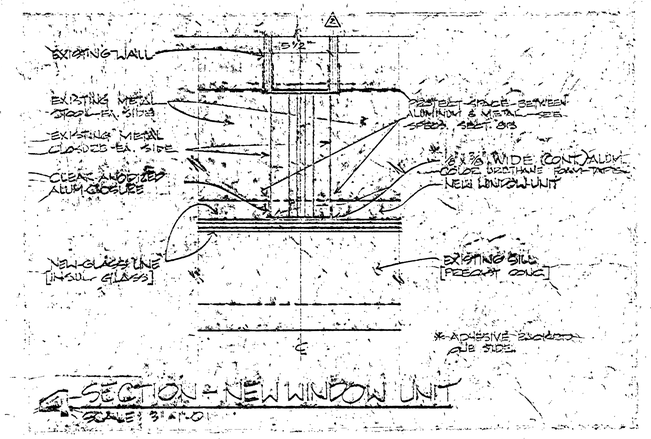

SECTION - NEW WINDOW UNIT
SCALE : 3"=1'-0"

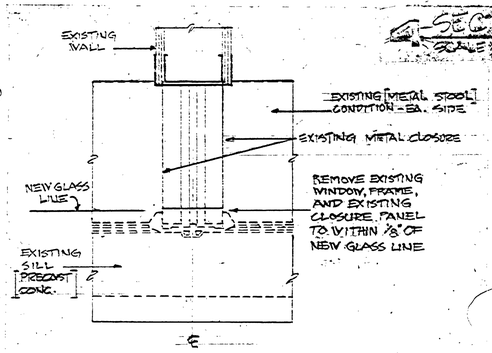

3 SECTION - DEMOLITION
SCALE : 3"=1'-0"

TELECOMMUNICATIONS EQUIPMENT AFFECTED BY THIS CONTRACT WORK IS NOT TO BE ALTERED OR REMOVED BY THE CONTRACTOR. CONTACT THE COR IN THE EVENT OF A CONFLICT.

SIGNATURE / OFFICE SYMBOL / DATE

REV.	BY	DATE	REVISION	C.I. NO.	APPROVED
2	KSW	11-30-81	REVISED PER RED LINE-AS BUILT	Y-3	
1	JWT	1-19-81	PAINT STAIRWELL 3 & 12/CORRECT PLOTTING NO.	33011-1	

NATIONAL AERONAUTICS AND SPACE ADMINISTRATION
MARSHALL SPACE FLIGHT CENTER HUNTSVILLE, ALABAMA
SMITH SECKMAN REID, INC.

REHABILITATION OF E.L.T.A. & L.T.A.
BUILDING 4619 - PHASE 2
EXTERIOR ELEVATIONS & DETAILS

NASA AE CONTRACT NO. NAS8-33041			FILE NO. MSFC 12063
SUBMITTED: Kay R. Chan	APPROVAL RECOMMENDED:	APPROVED: CHIEF ENGINEERING DIVISION	
AE: DATE: 2-6-79	MSFC: DATE: 10 Dec 80	NASA: DATE: 2/19/80	
DESIGNED FTV DRAWN FTV CHECKED LAS	APPROVAL RECOMMENDED: CHIEF, ARCHITECTURAL BRANCH		DWG NO. FAC-BD-4619-A3
REF. NO. A-3	SCALE: SHOWN	DESIGN DATE: 1-10-80 SPEC. NO. MSFC-5001	

MSFC - FORM 238 (REV. 7-71)

MSFC MASTER BID DISK 11-18-2013

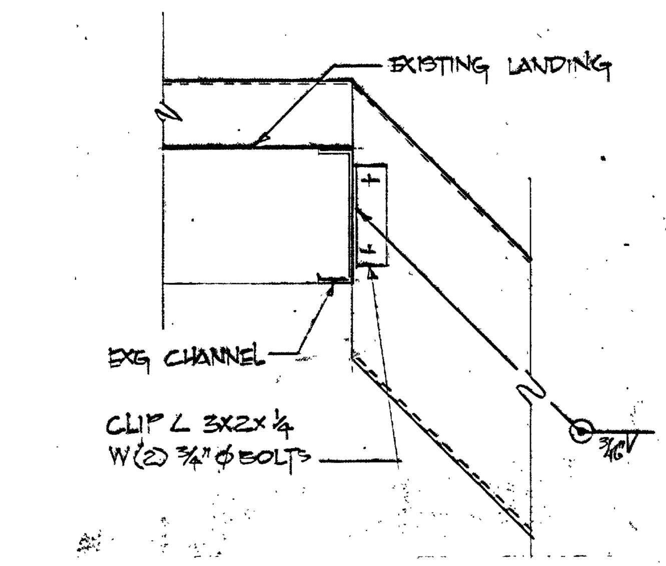

4 CONNECTION–NEW STAIR TO EXISTING LANDING
1½"=1'-0"

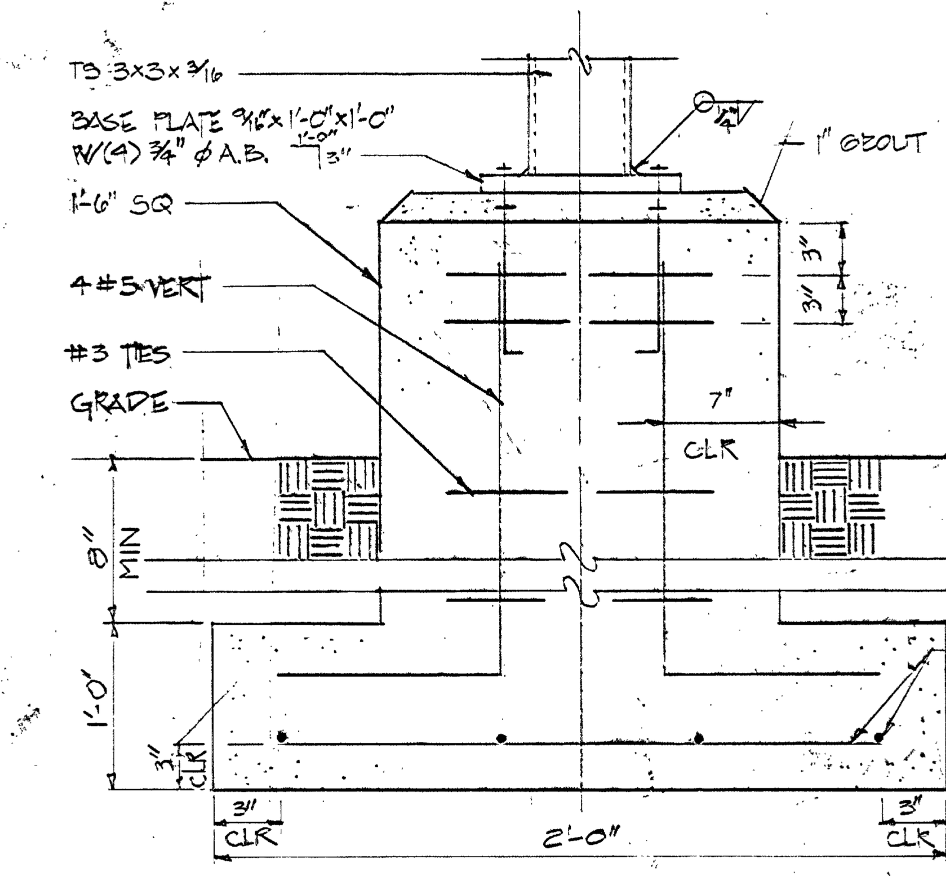

5 TYPICAL STAIR LANDING FOOTING
NOT TO SCALE

NOTE: REMOVED EXISTING PAVEMENT (ASPHALT) FOR INSTALLATION OF NEW CONCRETE FOOTINGS AND CONCRETE STOOP. PATCH AROUND NEW CONSTRUCTION TO MATCH EXISTING PAVEMENT.

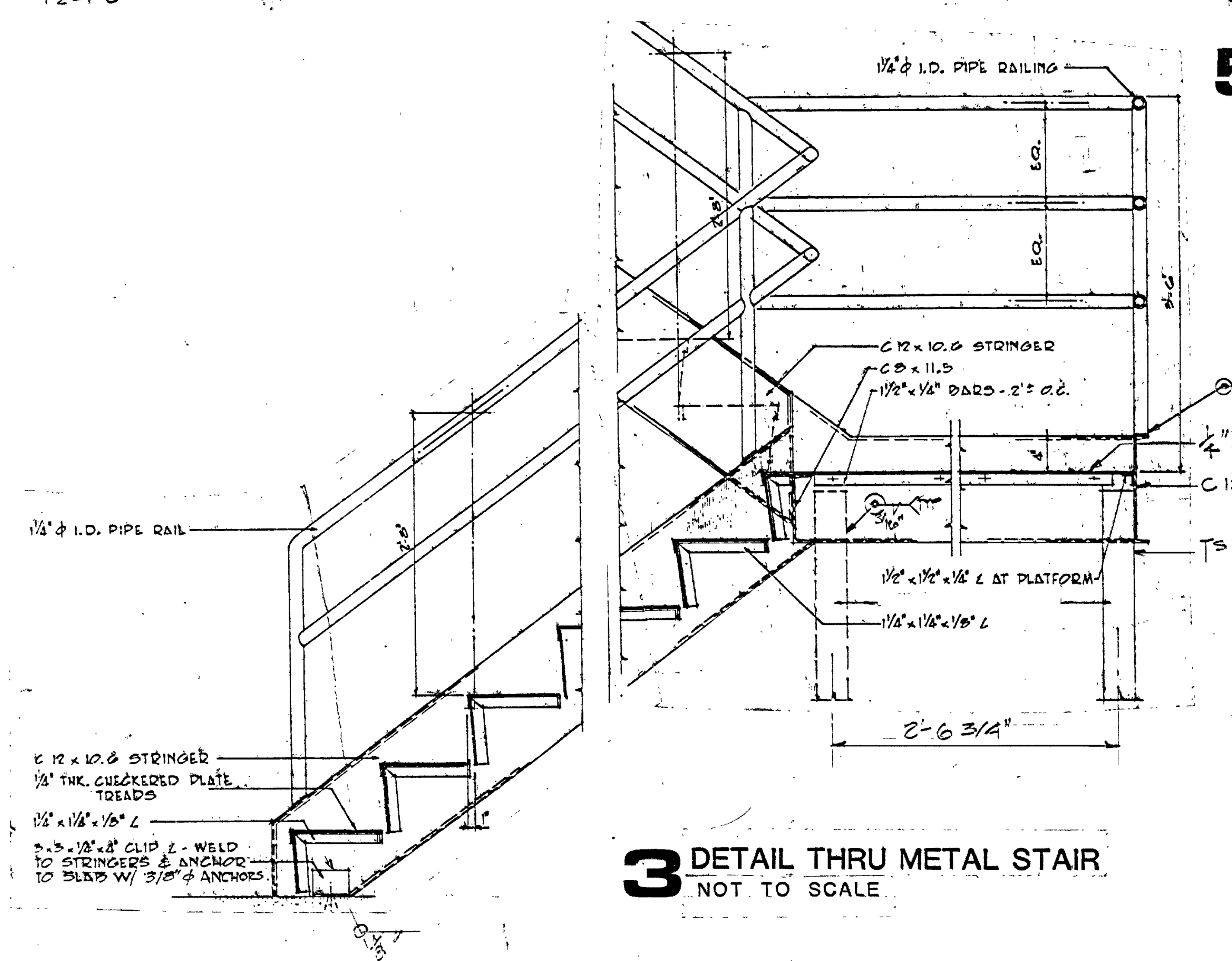

3 DETAIL THRU METAL STAIR
NOT TO SCALE

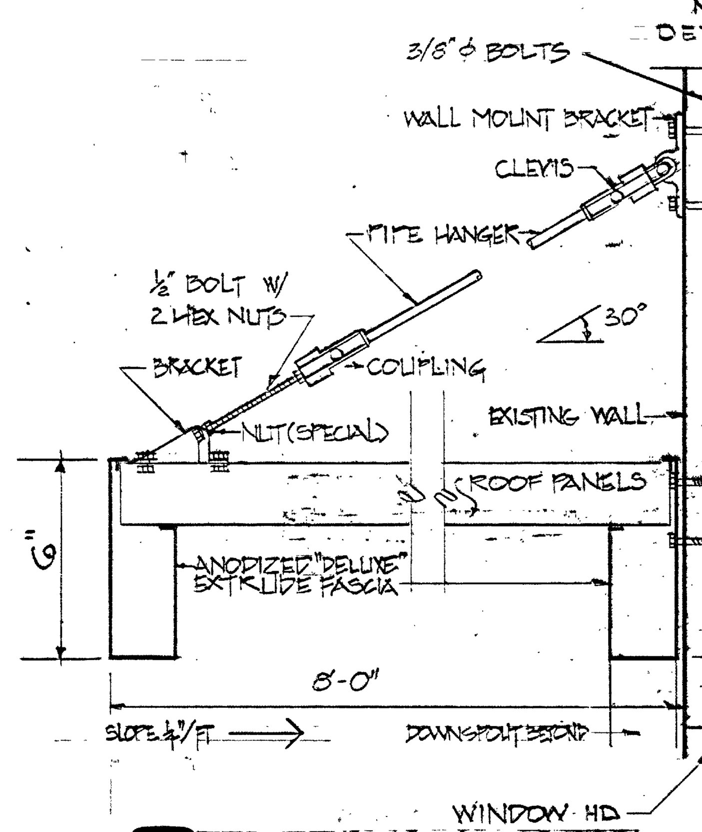

2 SECTION THRU CANOPY
SCALE: 3" = 1'-0"

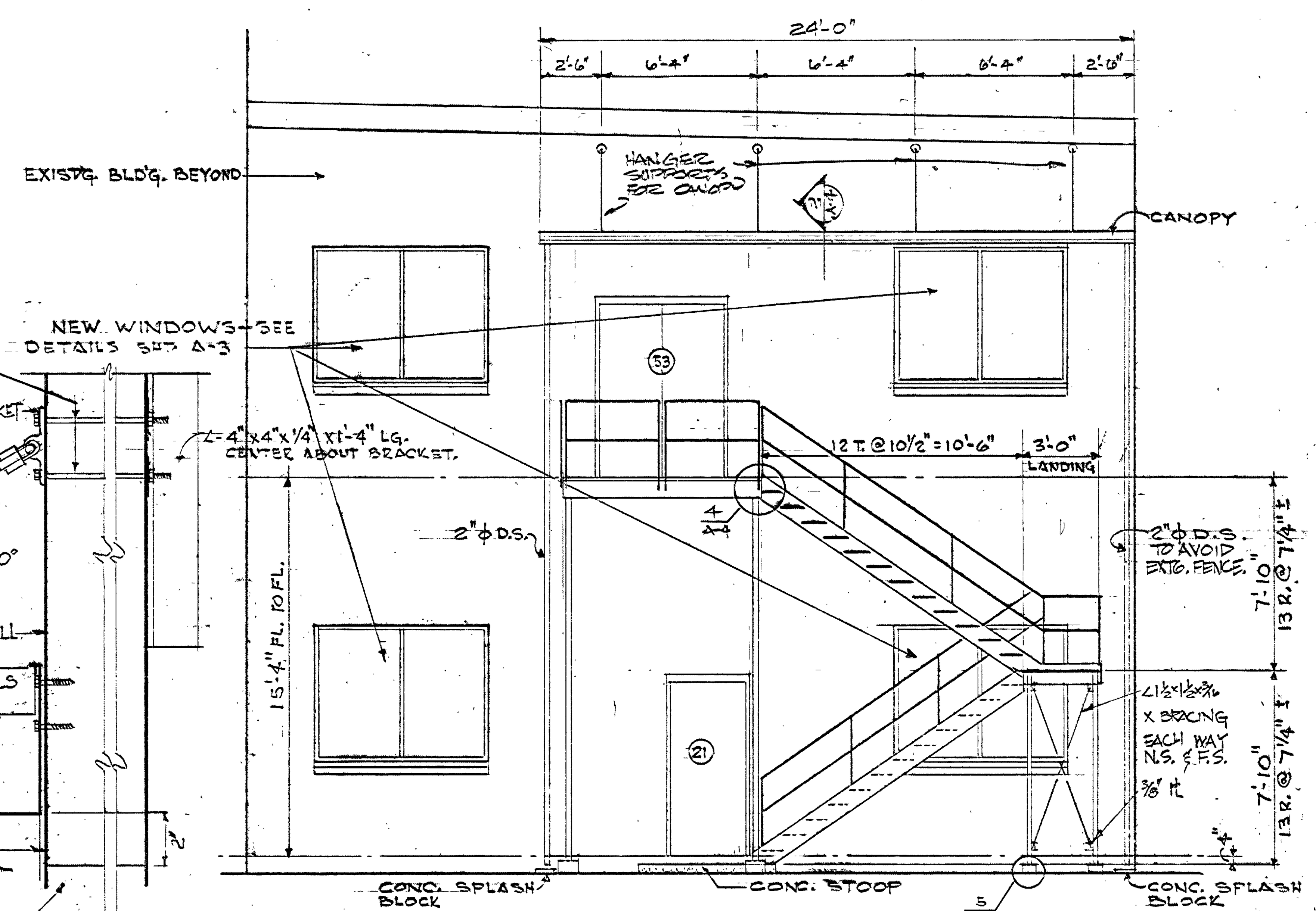

1 SECTION THRU METAL EMERGENCY STAIR
SCALE: 1/4"=1'-0"

DOOR SCHEDULE

Nº	DOOR SIZE	EXISTING DOORS: ADD DUMMY LOCK CYL.	REPLACE PANIC HDW.	REPLACE CLOSER	ADD NEW METAL THR.	ADD NEW WEATHERSTRIP	REPLACE W/ H.M. DOOR	REPLACE LATCHSET	REUSE EXIST'G. DOOR	REUSE MET. FRAME	REUSE EXIST'G. HDW.	NEW DOORS: H.M. FRAME	H.M. DOOR	WOOD DOOR	PANIC HDW.	PASSAGE HDW.	CLOSER	POSITIVE LATCH	METAL THR.	WEATHERSTRIP	"B" LABEL DR. & FR.	REMARKS (NOTE- SET ALL NEW METAL THRESHOLDS IN FULL BED OF MASTIC.)
1	EXISTING						●						●		●		●	●			●	MATCH SIZE OF EXIST'G. 131
2	do.							●														NEW 18"x13" DR. GRILLE 114
3	do.					●																DBL DR. 114
4	do.							●														117
5	do.							●														118 COR.
6	do.					●																118 DBL DR.
7	do.		●		●	●																137A DBL DR
8	do.		●		●	●																137 DBL DR
9	do.	●																				NEW 18" SQ. DR. GRILLE 124
10	do.	●																				do. 125
11	do.	●																				
12	do.	●																				
13	do.	●																				NEW 18" SQ. DR. GRILLE 128
14	do.	●																				
15	do.	●																				
16	do.	●																				
17	do.	●																				
18	do.	●																				
19	do.	●																				
20	do.	●																				
21	3'-0"x7'-0"x1 3/4"											●	●		●		●	●	●	●		4" HEAD
22	EXISTING	●						●														
23	do.	●						●														
24	do.		●	●	●	●																
25	do.	●																				
26	PR: 3'-0"x8'-0"x1¾"											●	●		●		●	●	●	●		½ GLASS
27	EXISTING		●	●																		
28	do.		●	●	●	●																
29	3'-0"x7'-2"x1¾"		●	●	●	●							●		●		●	●	●	●	●	REPLACE CRACKED DR.
30	EXISTING		●																			
31	do.					●																
32	do.						●						●		●		●	●			●	3'-0"x6'-8"x1¾"
33	do.	●																				
34	do.	●																				
35	do.	●																				
36	do.	●																				NEW 18" SQ. DR. GRILLE
37	do.	●																				
38	do.	●																				NEW 18" SQ. DR. GRILLE
39	do.	●																				
40	do.	●																				
41	do.	●																				NEW 18" SQ. DR. GRILLE
42	do.	●																				do.
43	do.	●																				
44	do.	●																				NEW 18" SQ. DR. GRILLE
45	do.	●																				do.
46	do.	●																				do.
47	do.	●																				do.
48	do.	●																				do.
49	do.	●																				
50	do.	●																				
51	do.	●																				
52	do.	●																				
53	do.																					REPAIR WATER DAM @ HEAD
54	do	●																				
55	do.	●																				
2A	EXISTING																					NEW 18" SQ. DR. GRILLE 114
5A	do.																					do. 119
5B	do.																					do. 127

EXISTING GRID SYSTEM SHALL BE PAINTED IN ALL AREAS RECEIVING NEW ACOUST. TILE SEE SPECS.

FINISH SCHEDULE

Nº	SPACE NAME	NEW WORK: PAINT CLG. GRID	V.A. TILE	VINYL BASE	PAINT WALLS	SPOT REPLACE & CLEAN: A.C. TILE	V.A. TILE	REMARKS (PAINT ALL A.C. TILE GRID RUNNERS WHITE)
100	HIGH BAY							NO WORK
101	LAB	●	●					
102	LAB					●		
103	LAB							NO WORK.
104	LOCKERS	●	●	●	●		●	
105	STORAGE					●		
106	CORRIDOR	●	●	●	●		●	EPOXY WALLS (TYP)
① 107	MEN'S TOILET	●	●		●*			*ABOVE WSCT. EPOXY
108	COMPUTER ROOM	●*	●		●			*PERFORATED A.C.
110	LAB							NO WORK
111	SOFT ROOM							NO WORK
112	COMPUTER ROOM	●+	●					+PERFORATED A.C.
113	LAB							NO WORK
114	LAB	●	●	●	●		●	
115	LAB	●	●	●	●		●	
116	LAB	●	●	●	●		●	
117	LAB	●	●	●	●		●	
118	LAB	●	●	●	●		●	
① 119	MEN'S TOILET	●	●		●+			+ ABOVE WSCT. EPOXY
① 120	WOMEN'S TOILET	●	●		●+			+ABOVE WSCT. "
121	ANTE ROOM	●	●	●	●		●	EPOXY
122	OFFICE	●	●	●	●		●	
123	JANITOR							NO WORK
124	OFFICE	●	●	●	●		●	
125	OFFICE	●	●	●	●		●	
126	OFFICE	●	●	●	●		●	
127	OFFICE	●	●	●	●		●	
128	OFFICE	●	●	●	●		●	
129	CONFERENCE	●	●	●	●		●	
130	OFFICE	●	●	●	●		●	
131	CORRIDOR	●	●	●	●		●	EPOXY
132	OFFICE	●	●	●	●		●	
132-A	OFFICE	●	●	●	●		●	
133	OFFICE	●	●	●	●		●	
134	OFFICE	●	●	●	●		●	
138	HARD ROOM		●					NO WORK
200	OFFICE	●	●	●	●		●	
201	LAB	●	●	●	●		●	
202	OFFICE	●	●	●	●		●	
203	OFFICE	●	●	●	●		●	
204	OFFICE	●	●	●	●		●	
205	OFFICE	●	●	●	●		●	
205A	OFFICE	●	●	●	●		●	
206	OFFICE	●	●	●	●		●	
① 207	MEN'S TOILET	●	●		●+			+ABOVE WSCT. EPOXY
208	OFFICE	●	●	●	●		●	
208-A	OFFICE	●	●	●	●		●	
209	ANTE ROOM	●	●	●	●		●	EPOXY
① 210	WOMEN'S TOILET	●	●		●+			+ ABOVE WSCT. EPOXY
211	JANITOR		●					NO WORK
212	OFFICE	●	●	●	●		●	
213	LAB	●	●	●	●		●	
214	CONFERENCE	●	●	●	●		●	
215	OFFICE	●	●	●	●		●	
216	OFFICE	●	●	●	●		●	
217	OFFICE	●	●	●	●		●	
218	OFFICE	●	●	●	●		●	
219	OFFICE	●	●	●	●		●	
220	OFFICE	●	●	●	●		●	
221	CORRIDOR	●	●	●	●		●	EPOXY - WALLS
222	OFFICE	●	●	●	●		●	
224	OFFICE	●	●	●	●		●	
225	CORRIDOR	●	●	●	●		●	EPOXY - WALLS
	STAIR-1		●	●	●			
	STAIR-2		●	●	●			REPLACE I STAIR NOSING
137	VESTIBULE	●	●	●	●		●	EPOXY WALLS
137A	LOBBY	●	●	●	●			EPOXY WALLS
100-A	CORRIDOR IN L.T.A.	●		●	●		●	NEW CL'G. GRID EPOXY WALLS

NOTE · ALL PAINT COLORS, OFFICE, SELECTED BY THE NASA ARCHITECT.
① PAINT TOILET PARTITIONS–COLOR SELECTED BY NASA ARCH.

CONCRETE NOTES

1. ALL CONC. TO DEVELOP 3000 PSI COMPRESSIVE STRENGTH (f'c) AT THE END OF 28 DAYS.
2. ALL REINFORCING STL TO BE DEFORMED BARS ASTM A-615 GRADE 60.
3. MIN. BAR SPLICE TO BE 24 BAR DIAS OR 1'-4" MIN.
4. MIN. CLEARANCES – FOOTING – 3" PIERS – 2"

FOUNDATION NOTES

1. ALL FTINGS ARE DESIGNED TO BEAR ON SOIL CAPABLE OF SUPPORTING 3000 PSF.

STEEL NOTES

1. STRUCTURAL STL TO BE ASTM A-36
2. FABRICATION & ERECTION OF ALL STL TO BE IN ACCORDANCE W/ AISC SPECIFICATIONS FOR BUILDINGS (LATEST EDITION)
3. CONNECTIONS TO BE BOLTED OR WELDED. BOLTS TO BE A-325 UNLESS NOTED OTHERWISE. MIN. SIZE BOLT TO BE ¾".

STAIR-1 & STAIR-2: THE FOLLOWING AREAS SHALL BE FINISHED W/ONE PRIME COAT & TWO (2) FINISH COATS OF THE APPROVED EPOXY MATERIAL:
- WALLS: MATCH COLOR OF ADJACENT CORRIDOR
- STRUC. ST.: MATCH COLOR OF ADJ. WALLS.
- HANDRAILS, POST, ETC: BLACK
- RISERS/TREADS (IF METAL): BLACK
- CEILING: WHITE
- DOORS/FRAMES: BOTH SIDE OF THESE WHICH LEAD TO & FROM STAIR – MATCH CORRIDOR DOORS & FRAMES.
- REMOVE OLD VINYL BASE & REPLACE W/NEW BLACK VINYL BASE IN STAIR AREAS.

TELECOMMUNICATIONS EQUIPMENT AFFECTED BY THIS CONTRACT WORK IS NOT TO BE ALTERED OR REMOVED BY THE CONTRACTOR. CONTACT THE COR IN THE EVENT OF A CONFLICT.

AB51 / RS Carlin 12/11/79
SIGNATURE OFFICE SYMBOL DATE

REV.	BY	DATE	REVISION	C.I. NO.	APPROVED
2		11-30-81	REVISED PER RED LINE-AS BUILT	Y-3	
1	JWT	1/19/81	PAINT STAIRWELLS #1 & 2 / CORRECT. PASTER LA	33611-1	

NATIONAL AERONAUTICS AND SPACE ADMINISTRATION
MARSHALL SPACE FLIGHT CENTER HUNTSVILLE, ALABAMA
SMITH SECKMAN REID, INC.

REHABILATATION OF E.L.T.A. & L.T.A.
BUILDING 4619 - PHASE 2
SCHEDULES & DETAILS

NASA AE CONTRACT NO. NAS8-33041
FILE NO. MSFC 12064
SUBMITTED: Roger R. Chase AE: DATE: 9-6-79
APPROVAL RECOMMENDED: LAB: DATE: 10 Jan 80
APPROVED: CHIEF ENGINEERING DIVISION NASA DATE: 2/14/80
DESIGNED FTV
DRAWN FTV
CHECKED LAS
SCALE: SHOWN
APPROVAL RECOMMENDED: CHIEF ARCHITECTURAL BRANCH
DESIGN DATE: 1/10/80
SPEC. NO. FAC-2001
REF. NO.
A-4
DWG NO. FAC-BD-4619-A4

MSFC MASTER BID DISK 11-18-2013

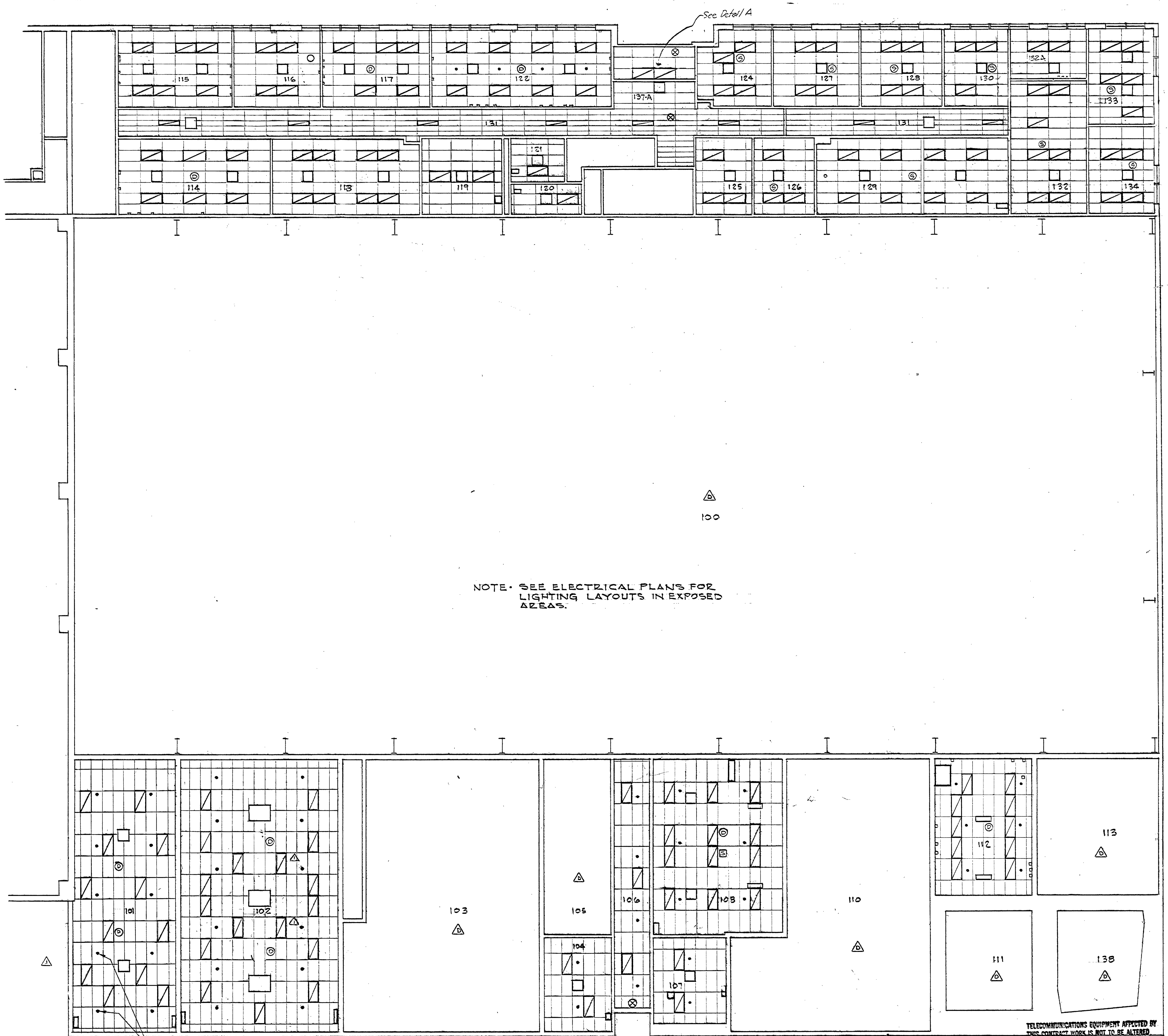

FIRST FLOOR REFLECTED CEILING PLAN - E.L.T.A.

SCALE: 1/8" = 1'-0"

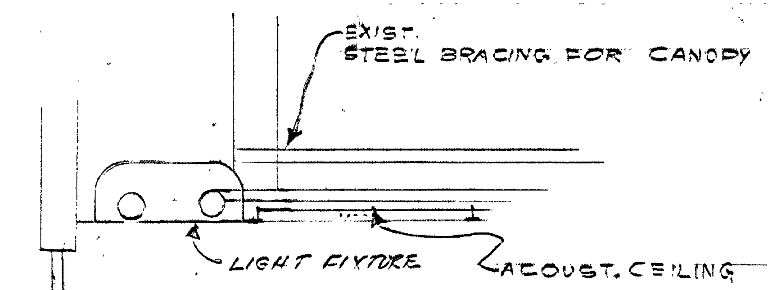

DETAIL - "A"
N.T.S.

LEGEND

- 2x4 LAY-IN ACOUSTICAL TILE
- 1/2" GYPSUM BOARD
- EXPOSED CONSTRUCTION
- RECESSED LIGHT FIXTURE
- SURFACE MOUNTED LIGHT FIXTURE
- EXIT LIGHT
- SPEAKER (EXISTING)
- SMOKE DETECTOR (EXISTING)
- SPRINKLER HEAD (EXISTING)
- CUT OUTS IN ACOUSTICAL TILE
- SUPPLY & EXHAUST DIFFUSERS - SEE MECH.

TELECOMMUNICATIONS EQUIPMENT AFFECTED BY THIS CONTRACT WORK IS NOT TO BE ALTERED OR REMOVED BY THE CONTRACTOR. CONTACT THE COR IN THE EVENT OF A CONFLICT.

SIGNATURE ... OFFICE SYMBOL AB51 DATE 12/11/79

REV.	BY	DATE	REVISION	C.I. NO.	APPROVED
1		11-30-81	REVISED PER RED LINE - AS BUILT	Y-3	

NATIONAL AERONAUTICS AND SPACE ADMINISTRATION
MARSHALL SPACE FLIGHT CENTER HUNTSVILLE, ALABAMA

SMITH SECKMAN REID, INC.

REHABILATATION OF E.L.T.A. & L.T.A.
BUILDING 4619 - PHASE 2
REFLECTED CEILINGS

NASA AE CONTRACT NO. NAS8-33041 | FILE NO. MSFC 12065

SUBMITTED: AE: DATE: 9-6-79
APPROVAL RECOMMENDED: LAB: DATE: 10 Jan 80
APPROVED: CHIEF ENGINEERING DIVISION NASA DATE: 2/14/80
DESIGNED FTV
DRAWN FTV
CHECKED LAS
SCALE: SHOWN
APPROVAL RECOMMENDED: CHIEF, ARCHITECTURAL BRANCH
DESIGN DATE: 1-10-80
SPEC. NO. F9C-2001
REF. NO.
A-5
DWG NO. FAC-BD-4619-AS

MSFC MASTER BID DISK 11-18-2013

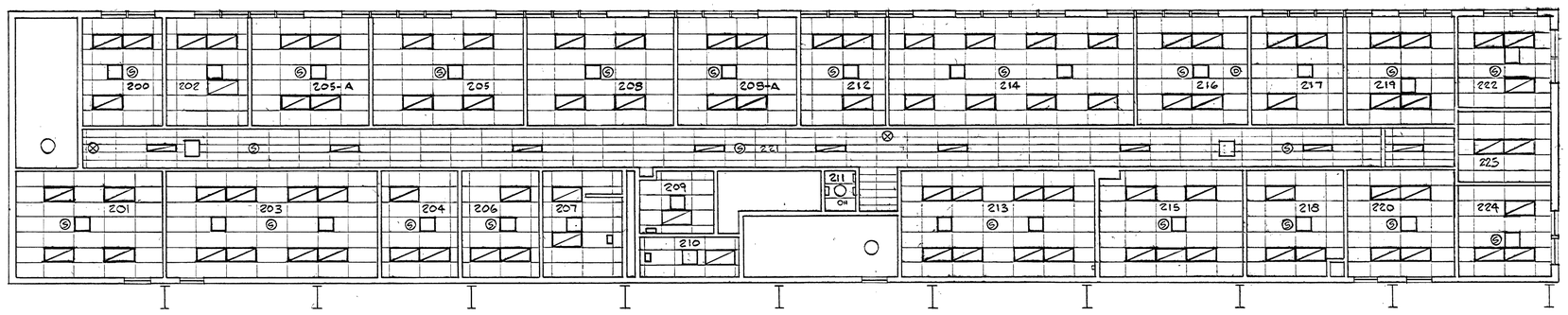

SECOND FLOOR REFLECTED CEILING PLAN - E.L.T.A.

SCALE: 1/8"=1'-0"

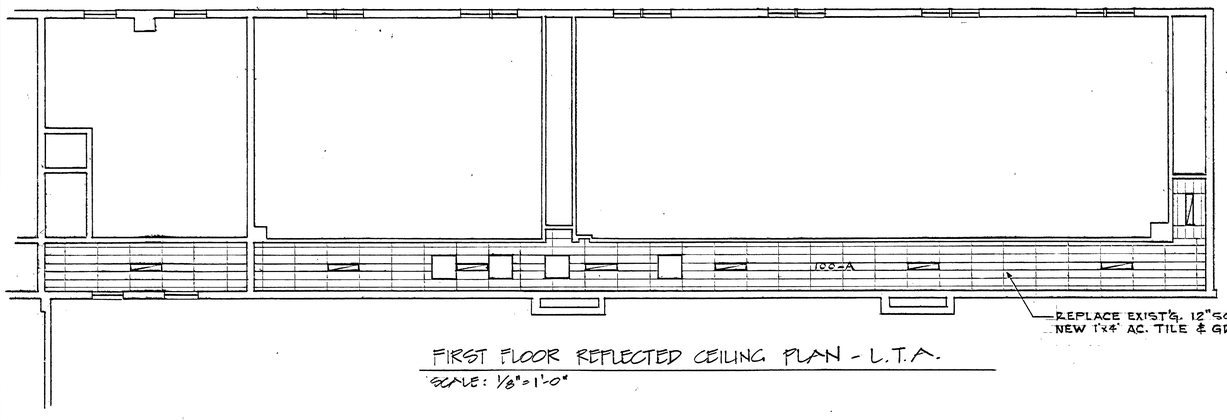

FIRST FLOOR REFLECTED CEILING PLAN - L.T.A.

SCALE: 1/8"=1'-0"

REV.	BY	DATE	REVISION	C.I. NO.	APPROVED
		11-30-81	As Built Issue		12/18/81

NATIONAL AERONAUTICS AND SPACE ADMINISTRATION
MARSHALL SPACE FLIGHT CENTER HUNTSVILLE, ALABAMA

SMITH SECKMAN REID, INC.

REHABILITATION OF E.L.T.A. & L.T.A.
BUILDING 4619 - PHASE 2
REFLECTED CEILINGS

NASA AE CONTRACT NO. NAS8-33041

FILE NO. MSFC 12066

SUBMITTED: Roger L. Chase
AE: DATE: 9-6-79

APPROVAL RECOMMENDED:
LAS DATE: 10-Dec 80

APPROVED: C. Dominick
CHIEF ENGINEERING DIVISION
NASA DATE: 2/19/80

REF. NO. A-6

DESIGNED FTV
DRAWN FTV
CHECKED LAS
SCALE: SHOWN

APPROVAL RECOMMENDED:
CHIEF, ARCHITECTURAL BRANCH
DESIGN DATE: 1-10-80
SPEC. NO. PAC-5001

DWG NO. PAC-8D-4619-A6

TELECOMMUNICATIONS EQUIPMENT AFFECTED BY THIS CONTRACT WORK IS NOT TO BE ALTERED OR REMOVED BY THE CONTRACTOR. CONTACT THE COR IN THE EVENT OF A CONFLICT.
R Kaelin AP51 12/11/79
SIGNATURE OFFICE SYMBOL DATE

Jack Walker CS-21 12-21-79

MSFC MASTER BID DISK 11-18-2013

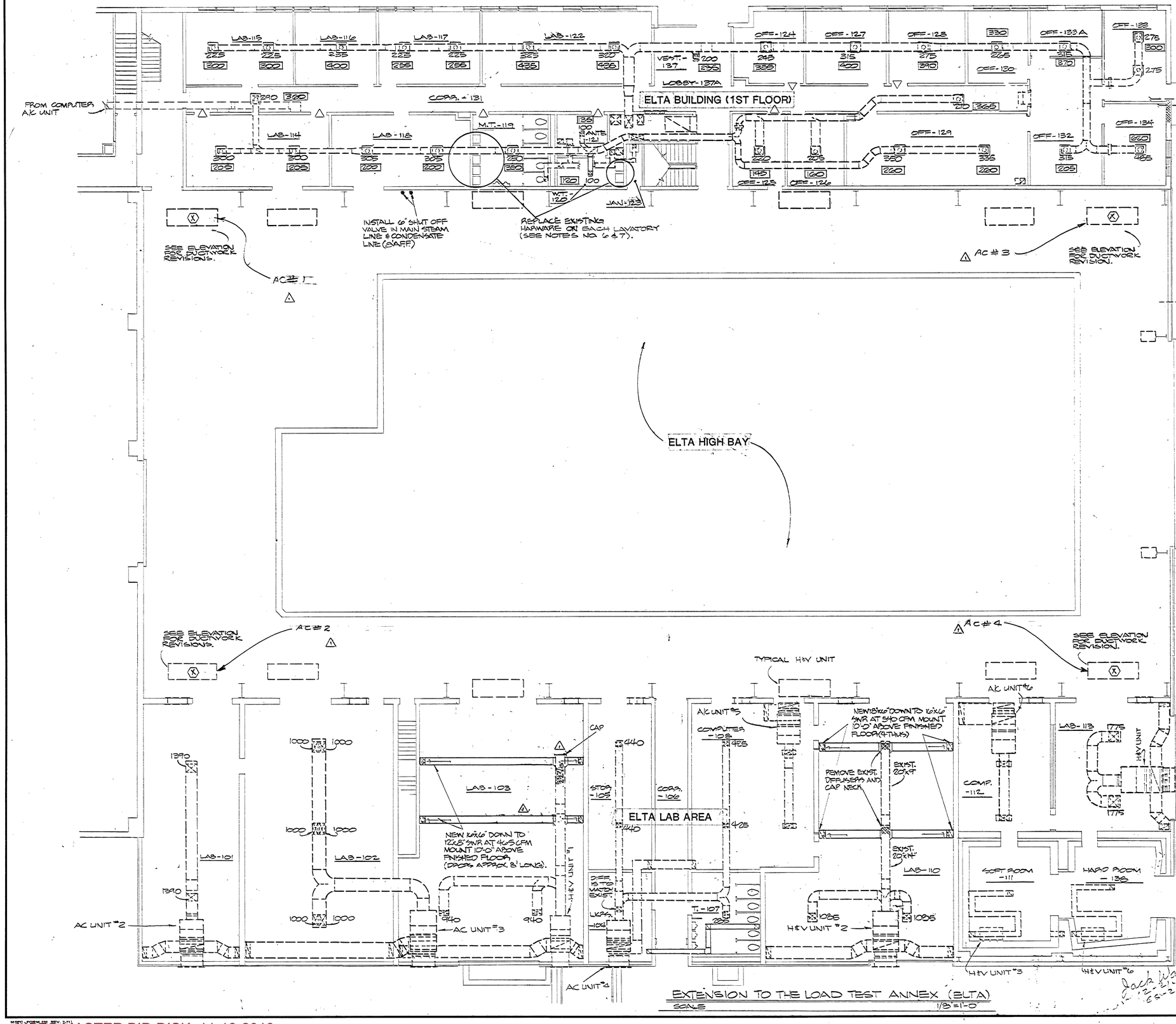

NOTES:

1. NEW 18"x18" DOOR GRILLE IN EXISTING DOORS MARKED △.
2. REMOVE EXISTING 2'x2' PERFORATED FACE OF ALL DIFFUSERS CLEAN BODY OF DIFFUSERS BEHIND FACE, AND INSTALL NEW PERFORATED FACES
3. REMOVE ALL RETURN GRILLES, TRANSFER GRILLES AND EXHAUST GRILLES, STEAM, OR PRESSURE SPRAY AND REPLACE AFTER WALLS HAVE BEEN REPAIRED AND PAINTED
4. REBALANCE AIR FLOWS IN OFFICE AREA TO LISTED AIR QUANTITIES SHOWN IN BOXES.
5. CLEAN HEATING AND COOLING COILS IN LAB AREA A/C UNITS.
6. FURNISH AMERICAN STANDARD 2248.557 OR EQUAL COMBINATION LAVATORY FAUCET W/GRID DRAIN AND FLOW RESTRICTOR. FURNISH P-TRAP
7. RECONDITION ALL FLUSH VALVES ON WATER CLOSETS AND URINALS. INSTALL NEW REPAIR KIT IN EACH VALVE (9 REQ'D.) △
8. A/C #1 WILL RUN THE FULL 32'-0" AS PRINTS CALL FOR.

A/C #2 DUCTWORK WILL NOT BE ABLE TO RUN 32'-0" AS PRINTS CALL FOR DUE TO WALKWAY FOR CRANE. IT WILL RUN 25'± HIGH.

A/C #3 WILL BE THE SAME AS UNIT #2 EXCEPT THE DUCTWORK WILL BE 3'-0" OFF OF WALL & WILL RUN 3'-0" HIGHER.

A/C #4 DUCT WILL BE THE SAME AS UNIT #2 25'± OF DUCTWORK. IT WILL BE 3'-0"± OFF WALL. SAME AS UNIT # 3

H&V UNIT ELEVATION
NO SCALE

EXTENSION TO THE LOAD TEST ANNEX (ELTA)
SCALE 1/8"=1'-0"

S.&M. BLDG. | L.T.A. | ELTA

REV.	BY	DATE	REVISION	C.I. NO.	APPROVED
△		11-30-81	REVISED PER REDLINE-AS BUILT	Y-3	

NATIONAL AERONAUTICS AND SPACE ADMINISTRATION
MARSHALL SPACE FLIGHT CENTER HUNTSVILLE, ALABAMA
SMITH SECKMAN REID, INC.

REHABILITATION OF BLDG. 4619 PHASE 2
HVAC ELTA BLDG. FIRSTFLOOR

NASA AE CONTRACT NO. NAS 8-33041
FILE NO. MSFC 12067

SUBMITTED: Kenneth R. Chance
AE: DATE: 2-6-73
APPROVAL RECOMMENDED: [signature] Lead DATE: 11-Dec-80
APPROVED: [signature] CHIEF ENGINEERING DIVISION NASA DATE: 7/14/82

REF. NO. M-1
DESIGNED JRB
DRAWN JAG
CHECKED RRC
SCALE: 1/8"
APPROVAL RECOMMENDED: [signature] CHIEF, Maintenance BRANCH DESIGN DATE: 12/5-12/8
SPEC. NO. MSFC-2001
DWG NO. FAC-80-4619-M1

CELCOMMUNICATIONS EQUIPMENT AFFECTED BY THIS COMMAND WORK IS NOT TO BE ALTERED OR REMOVED BY THE CONTRACTOR, CONTACT THE COR IN THE EVENT OF A CONFLICT.
SIGNATURE [signature] OFFICE SYMBOL ED24 DATE 12/11/79

MSFC MASTER BID DISK 11-18-2013

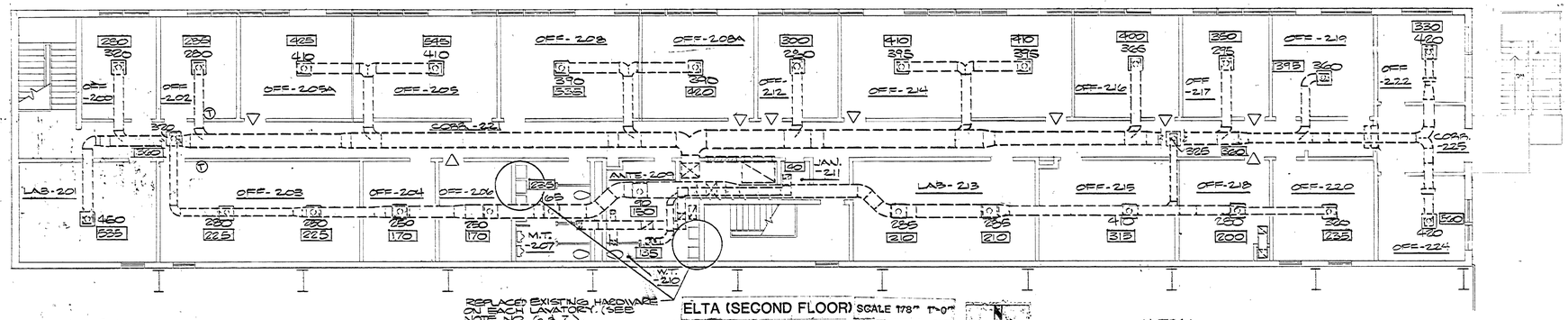

ELTA (SECOND FLOOR) SCALE 1/8" = 1'-0"

REPLACED EXISTING HARDWARE ON EACH LAVATORY. (SEE NOTE NO. 6 & 7).

PUMP SCHEDULE

① FURNISH PUMP W/BASE FOR MOUNTING ON EXISTING PAD. ③= MOTOR SHALL BE HIGH EFFICIENCY TYPE.

② ELECTRICAL SERVICE & CONTROLS ARE SHOWN ON ELECTRICAL DRAWINGS.

QUANT.	IDENT.	SYSTEM	TYPE	MFR. & MODEL NO.	GPM	FT. HEAD	MOTOR			STARTER				REMARKS
							MIN. HP	RPM	ELECT	TYPE	LOCATION	DISC. TYPE	ACCESSORIES	
1	CONDENSER WATER PUMP	COOLING TOWER	BASE MOUNTED	GOULD Size 8 1052	750	110'	30	1760	460/3Ø	②	②	②		①③ 53/34.5 AMPS

NOTES:

1. INSTALL _____ 15"x15" DOOR GRILLE IN EXISTING DOORS MARKED △.
2. REMOVE EXISTING 2'x2' PERFORATED FACES OF ALL DIFFUSERS, CLEAN BODY OF DIFFUSERS BEHIND FACE, AND INSTALL NEW PERFORATED FACES
3. REMOVE ALL RETURN AIR GRILLES, TRANSFER GRILLES AND EXHAUST GRILLES. SHALL BE STEAM OR PRESSURE SPRAYED AND REPLACED AFTER WALLS HAVE BEEN REPAIRED AND PAINTED.
4. SEE ARCH. REFLECTED CEILING PLAN FOR EXACT LOCATION OF CEILING DIFFUSSERS.
5. REBALANCE AIR FLOWS IN OFFICE AREA TO LISTED DSN. AIR QUANTITIES SHOWN IN BOXES (350).
6. FURNISH AMERICAN STANDARD 2248.557 OR EQUAL. COMBINATION LAVATORY FAUCET W/GRID DRAIN AND FLOW RESTRICTOR. FURNISH P-TRAP.
7. RECONDITION ALL FLUSH VALVES ON WATER CLOSETS AND URINALS. INSTALL NEW REPAIR KIT IN EACH VALVE (6 REQ'D)

SYMBOL LEGEND

- EXIST. TO REMAIN
- EXISTING DUCTWORK TO REMAIN
- NEW DUCTWORK

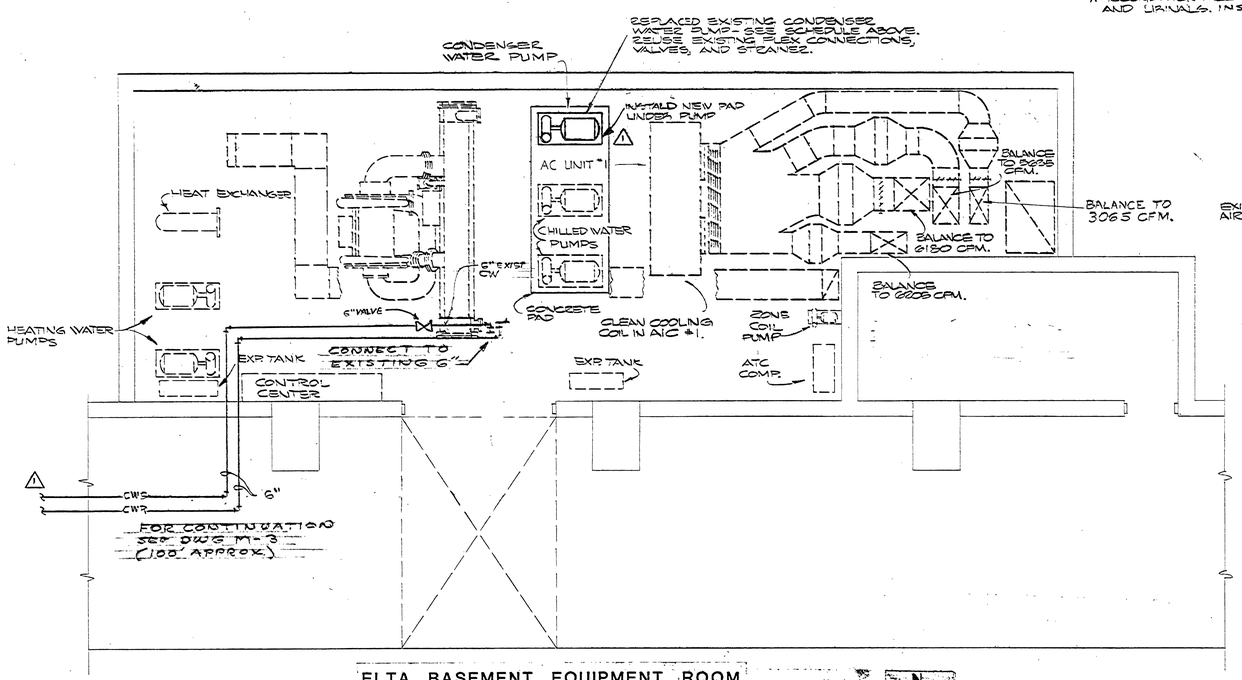

ELTA BASEMENT EQUIPMENT ROOM

SCALE 1/4" = 1'-0"

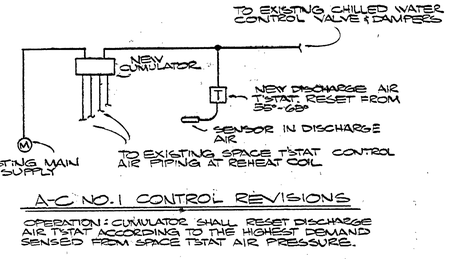

A-C NO. 1 CONTROL REVISIONS

OPERATION: CUMULATOR SHALL RESET DISCHARGE AIR T-STAT ACCORDING TO THE HIGHEST DEMAND SENSED FROM SPACE T-STAT AIR PRESSURE.

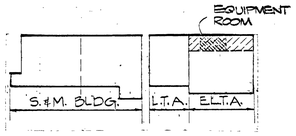

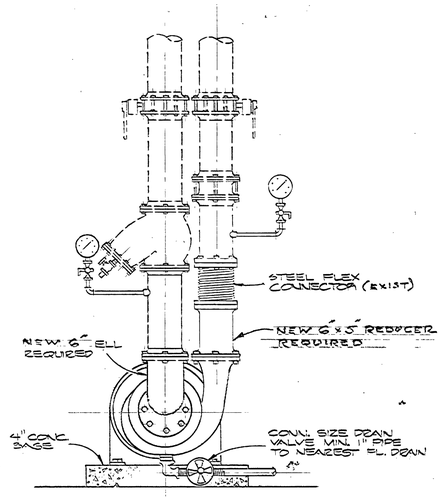

DETAIL OF END SUCTION WATER PUMP

REV.	BY	DATE	REVISION	C.I. NO.	APPROVED
△	JAG	11-26-81	REVISED PER RED LINE - AS BUILT.	V-3	

NATIONAL AERONAUTICS AND SPACE ADMINISTRATION
MARSHALL SPACE FLIGHT CENTER HUNTSVILLE, ALABAMA
SMITH SECKMAN REID, INC.

REHABILITATION OF BLDG. 4619 PHASE 2
HVAC ELTA BLDG. SECOND FLOOR &
BASEMENT EQ. ROOM

NASA AE CONTRACT NO. NAS 8-33041 — FILE NO. M.S.F.C. 12068

SUBMITTED: Kaye R. Crim AE DATE: 9-6-79
APPROVAL RECOMMENDED: K.M. DeSimone ARCH DATE: 10 Jan 80
APPROVED: C. Hosenthien CHIEF ENGINEERING DIVISION NASA DATE: 2/14/80
DESIGNED JEB DRAWN JAG CHECKED RRC
APPROVAL RECOMMENDED: V.S. Thomas CHIEF, ARCHITECT BRANCH DESIGN DATE: 12/26/79
SCALE: AS SHOWN SPEC. NO. MSC-2001
DWG NO. AC-BD-4619-M2
REF. NO. M-2

TELECOMMUNICATIONS EQUIPMENT AFFECTED BY THIS CONTRACT WORK IS NOT TO BE ALTERED OR REMOVED BY THE CONTRACTOR. CONTACT THE COR IN THE EVENT OF A CONFLICT.
R. Kirkham AE51 12/11/79
SIGNATURE OFFICE SYMBOL DATE

Jack Wilder 12-2-79 12-21-79

MSFC MASTER BID DISK 11-18-2013

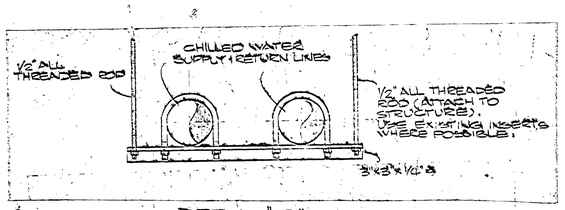

DETAIL "C"
SCALE NONE

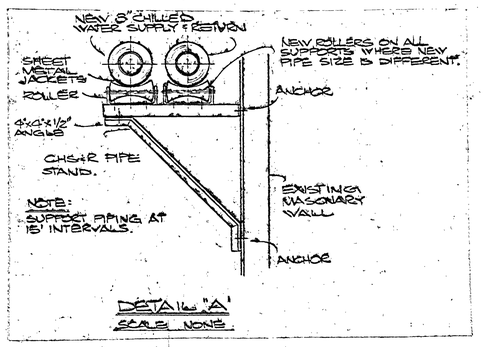

DETAIL "A"
SCALE NONE

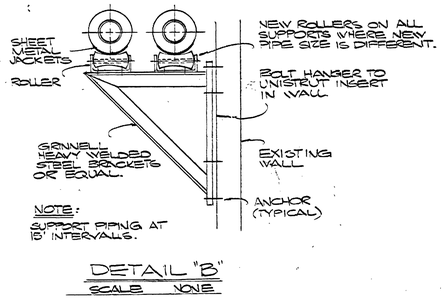

DETAIL "B"
SCALE NONE

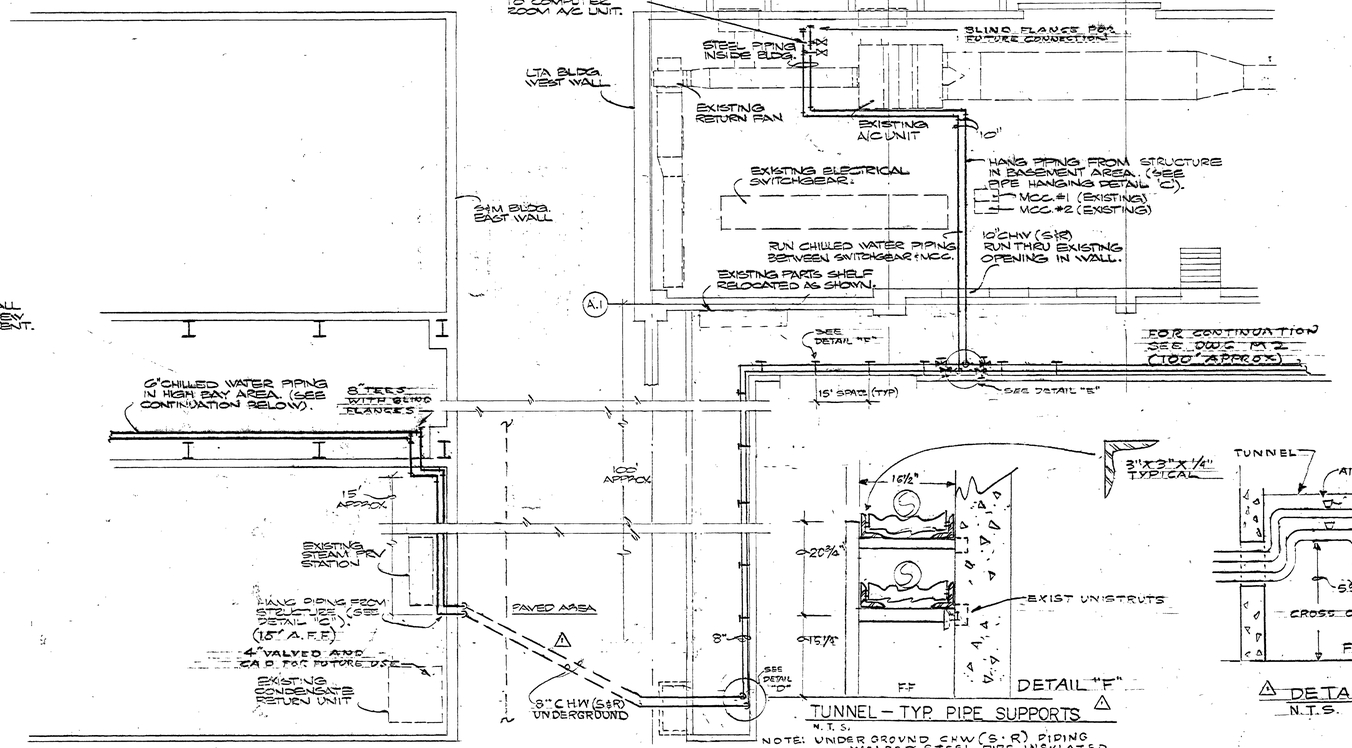

TUNNEL – TYP. PIPE SUPPORTS
N.T.S.

NOTE: UNDER GROUND CHW (S&R) PIPING WELDED STEEL PIPE INSULATED WITH 2" THICK FOAM GLASS INSULATION WITH TWO LAYERS OF TAR TREATED GLASS FABRIC SANDWICHED BETWEEN THREE LAYERS OF AND APPROVED COATING

PARTIAL PLAN OF EAST END OF S&M BUILDING AND WEST END OF LTA
SCALE 1/8"=1'-0"

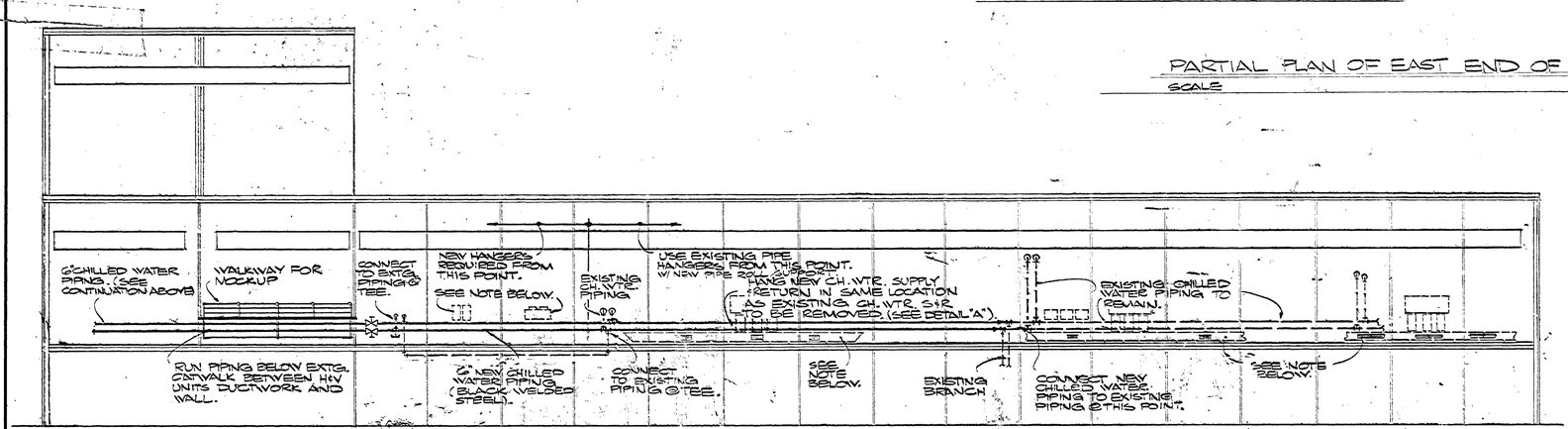

ELEVATION OF SOUTH WALL IN S&M BUILDING
SCALE 1/16"=1'-0"

NOTE:
1. PIPING ROUTED TO AVOID INTERFERENCE W/ EXISTING WALL MOUNTED EQUIPMENT.
2. EXISTING CHILLED WATER REMAINS IN OPERATION AFTER NEW PIPING IS INSTALLED.

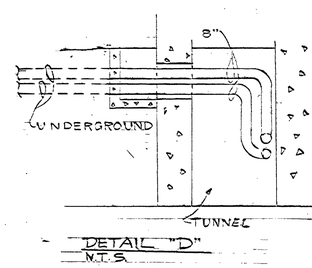

DETAIL "D"
N.T.S.

TELECOMMUNICATIONS EQUIPMENT AFFECTED BY THIS CONTRACT WORK IS NOT TO BE ALTERED OR REMOVED BY THE CONTRACTOR. CONTACT THE COR IN THE EVENT OF A CONFLICT.

SIGNATURE ES51 OFFICE SYMBOL 12/11/79 DATE

Jack Walker 5-21 12-21-79

REV.	BY	DATE	REVISION	C.I. NO.	APPROVED
1	SSR	11-30-81	REVISED PER RED LINE - AS BUILT	Y-3	12/82

NATIONAL AERONAUTICS AND SPACE ADMINISTRATION
MARSHALL SPACE FLIGHT CENTER HUNTSVILLE, ALABAMA
SMITH SECKMAN REID, INC.

REHABILITATION OF BLDG. 4619 PHASE 2
HVAC LTA BLDG. BASEMENT FLOOR

NASA AE CONTRACT NO. NAS8-33041
FILE NO. MSFC 12069
SUBMITTED: AE: DATE: 9-6-79
APPROVAL RECOMMENDED: LMSC: DATE: 10 Jan 80
APPROVED: OFFICE ENGINEERING DIVISION NASA: DATE: 2/14/80
REF. NO. M-3
DESIGNED JRB DRAWN JAG CHECKED RRC SCALE: AS SHOWN
APPROVAL RECOMMENDED: CHIEF, BRANCH DESIGN DATE: 12/21/79 SPEC. NO. MSFC-00001
DWG NO. FAC-BD-4619-113

MSFC MASTER BID DISK 11-18-2013

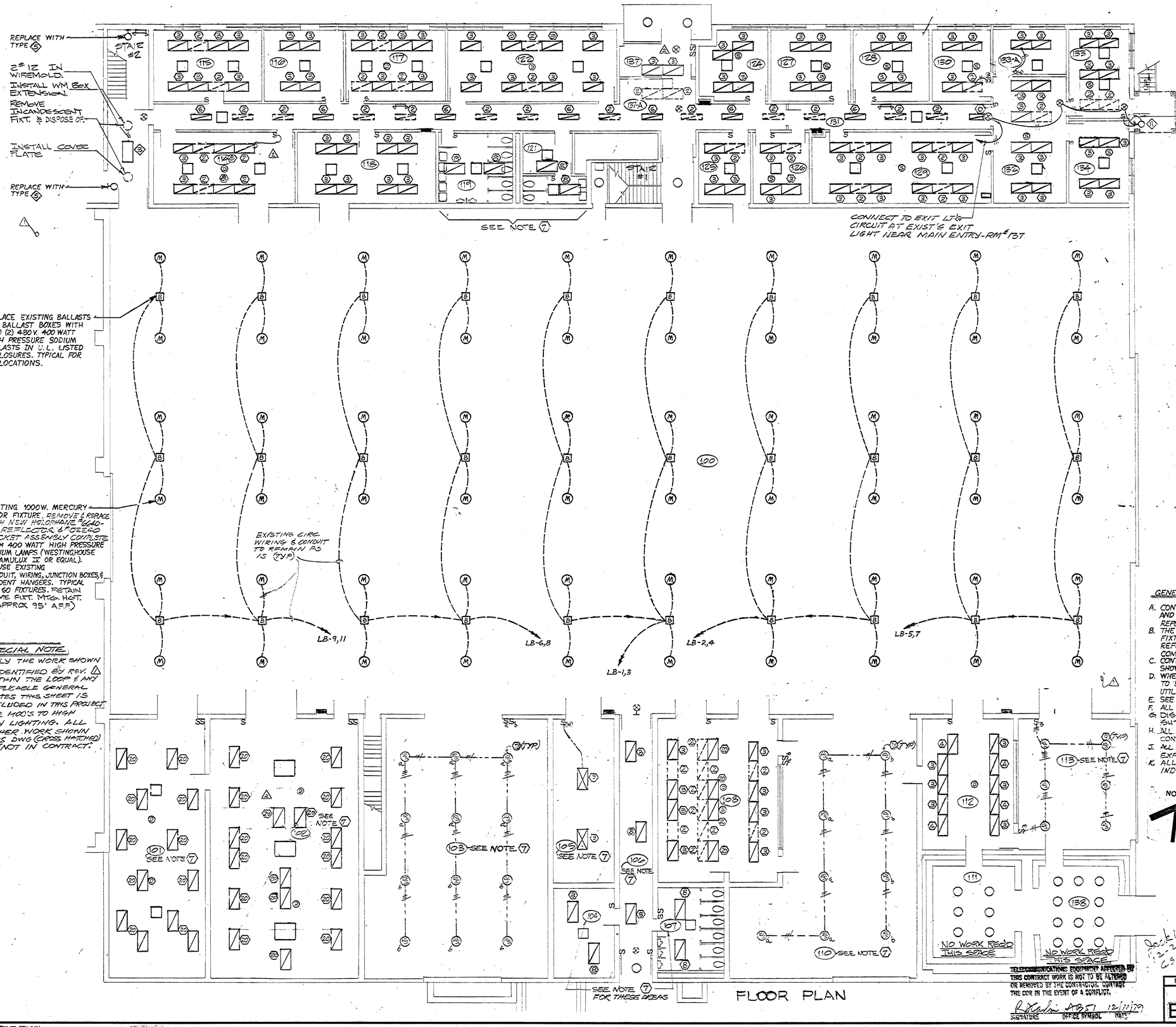

NOTES:

1. INSTALL 2-40W 4' RECESSED TROFFER REMOVED UNDER NOTE 2. REFURBISH AS IN NOTE 6.
2. NOT USED
3. REMOVED FIXTURES AS INDICATED, REINSTALL IN OTHER LOCATIONS WHERE REQUIRED AS PER NOTES THIS SHEET.
4. CLEAN EXISTING FIXTURE & RELAMP (TWO OUTBOARD LAMPS ONLY) WITH G.E. F35 WATT-MISER II LAMPS. REMOVE TWO INBOARD LAMPS AND DISCONNECTED INBOARD LAMP BALLASTS FROM THE LIGHTING BRANCH CIRCUIT. THIS BALLAST REMAINS IN FIXTURE. REPLACE DIFFUSER WITH NEW ACRYLIC DIFFUSER. (A)
5. CLEAN EXISTING FIXTURE & RELAMP WITH FOUR (4) F35 WATTMISER II LAMPS, REPLACED DIFFUSER WITH NEW ACRYLIC DIFFUSER. RECONNECT BALLAST WHERE ONE BALLAST HAS BEEN TAKEN OUT OF SERVICE.
6. NOT USED
7. CLEAN FIXTURE AND RELAMP FIXTURE WITH TWO (2) F35 WATTMISER II LAMPS.
8. REMOVED ALL EXISTING FIXTURES IN AREAS INDICATED - NOTES 'D,H,J'
9. REPLACED EXISTING FIXTURE WITH 4-40 WATT 2'x4' RECESSED FIXTURE (REMOVED UNDER NOTE 2) REFURBISH AS IN NOTE 3 ABOVE.
10. REPLACES EXISTING FIXTURES WITH TYPE 1 FIXTURES AS SHOWN.
11. REMOVED EXISTING WOOD POLE AND INCANDESCENT LIGHTING. SEE NOTE "H."
12. INSTALL TYPE 7 FIXTURE. CONNECT TO EXISTING BRANCH CIRCUIT. SEE DETAIL "A" FOR POLE BASE.
13. CLEANED FIXTURE AND RELAMP FIXTURE (TWO OUTBOARD LAMPS ONLY) WITH G.E. F35 WATTMISER II LAMPS. REMOVED TWO INBOARD LAMPS AND DISCONNECT RELATED BALLAST, FROM THE LIGHTING BRANCH CIRCUIT. THIS BALLAST REMAINS IN FIXTURE.
14. REPLACED EXISTING FIXTURES WITH TYPE 2 FIXTURES AS SHOWN.
15. NOT USED
16. NOT USED
17. INSTALL 4-40 WATT 2'x4' RECESSED FIXTURE (REMOVED UNDER NOTE 2). REFURBISH AS IN NOTE 6 ABOVE.
18. INSTALL TYPE 7 FIXTURE. CONNECT TO EXISTING BRANCH CIRCUIT. SEE DETAIL "A" FOR POLE BASE.

GENERAL NOTES:

A. CONTRACTOR SHALL PROVIDE TEMPORARY SUPPORT FOR TELEPHONE, DATA PROCESSING, AND COMMUNICATIONS CONDUCTORS AND SPEAKERS WHILE CEILING GRID IS BEING REPLACED. SYSTEMS SHALL REMAIN IN OPERATION.
B. THE ELECTRICAL DRAWINGS GENERALLY SHOW BOTH PROPOSED FIXTURES, EXISTING FIXTURES TO REMAIN, AND EXISTING FIXTURES TO BE REMOVED. SEE THE ARCH. REFLECTED CEILING PLAN FOR FIXTURE LAYOUT AS IT WILL APPEAR UPON COMPLETION OF ALL WORK.
C. CONTRACTOR SHALL VERIFY LOCATIONS, DIMENSIONS, AND QUANTITIES FOR ALL WORK SHOWN ON THESE DRAWINGS.
D. WHERE REPLACEMENT FIXTURES ARE CALLED FOR THE CONTRACTOR SHALL CONNECT TO EXISTING BRANCH CIRCUITS (EXTENDING WHERE NECESSARY) AND SHALL UTILIZE EXISTING SWITCH LEGS. BLANK OFF UNUSED BOXES.
E. SEE SHEET E-6 FOR NOTES 14 THRU 18.
F. ALL ACRYLIC DIFFUSERS SHALL BE 0.125" (KSH K-12)
G. DISCONNECT & REMOVE FIXT.'S AS REQ'D TO PAINT CEILING GRIDS. SEE SHTS. A-5 & A-6 & SPECIFICATIONS.
H. ALL FIXTURES REMOVED & NOT REINSTALLED BECAME PROPERTY OF CONTRACTOR. CONTRACTOR TO BE RESPONSIBLE FOR ACCURATE FIXTURE COUNT - SEE SH E-2.
J. ALL EXISTING WIRE NOT REUSED SHALL BE PULLED OUT COMPLETELY - ALL EXPOSED CONDUIT NOT REUSED SHALL BE REMOVED.
K. ALL NEW WIRE TO BE #12THW UNLESS OTHERWISE NOTED - CROSS HATCHES INDICATE NO. OF WIRES; NEW CONDUIT TO BE 3/4" MIN. SIZE.

NORTH

REV.	BY	DATE	REVISION	C.I. NO.	APPROVED
2	Contract	11-30-77	REVISED PER RED LINE - AS BUILT	Y-32	
1		3/24/1981	MODIFICATIONS TO HIGH BAY LIGHTING		

NATIONAL AERONAUTICS AND SPACE ADMINISTRATION
MARSHALL SPACE FLIGHT CENTER HUNTSVILLE, ALABAMA
SMITH SECKMAN REID, INC

REHABILITATION OF BLDG. 4619 PHASE 2
ELTA-FIRST FLOOR LIGHTING

NASA AE CONTRACT NO. NAS8-33041 | FILE NO. MSFC 12071

SUBMITTED: Kaye R. Crow — AE: DATE: 9-6-79
APPROVAL RECOMMENDED: W.J. Simmons — CHIEF, ENGINEERING BRANCH — DATE: 10 Dec 80
APPROVED: C. Jamison — CHIEF ENGINEERING DIVISION — NASA — DATE: 2/19/80

REF. NO. E-1
DESIGNED HON
DRAWN R.S.
CHECKED REW
SCALE: 1/8"=1'-0"
APPROVAL RECOMMENDED: (25) Simmons — CHIEF, ENGINEERING BRANCH — DESIGN DATE: 12/21/79
SPEC. NO. PDC-2001
DWG NO. FAC-BD-4613 E1

TELECOMMUNICATIONS EQUIPMENT AFFECTED BY THIS CONTRACT WORK IS NOT TO BE ALTERED OR REMOVED BY THE CONTRACTOR. CONTACT THE COR IN THE EVENT OF A CONFLICT.
SIGNATURE OFFICE SYMBOL DATE

Jack Whitten 12-21-79 12-5-79

MSFC - FORM 252 REV. 7-71)

MSFC MASTER BID DISK 11-18-2013

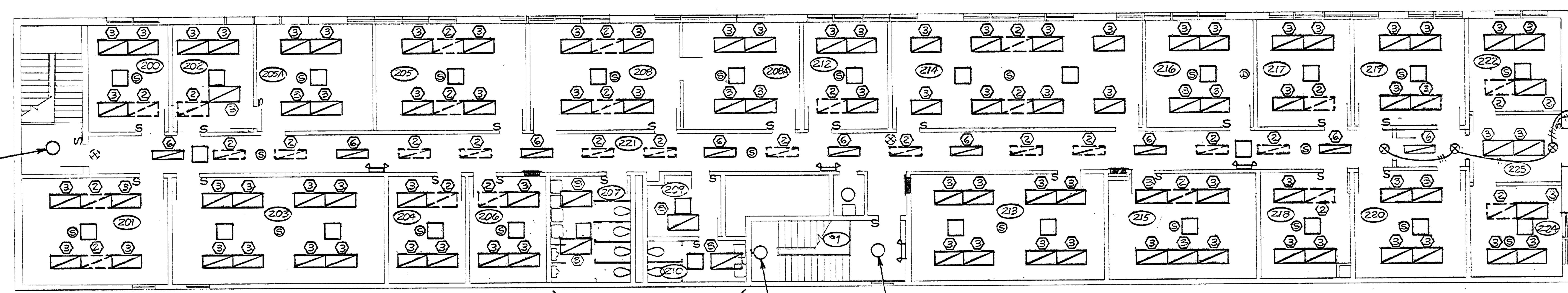

SECOND FLOOR PLAN
1/8" = 1'-0"

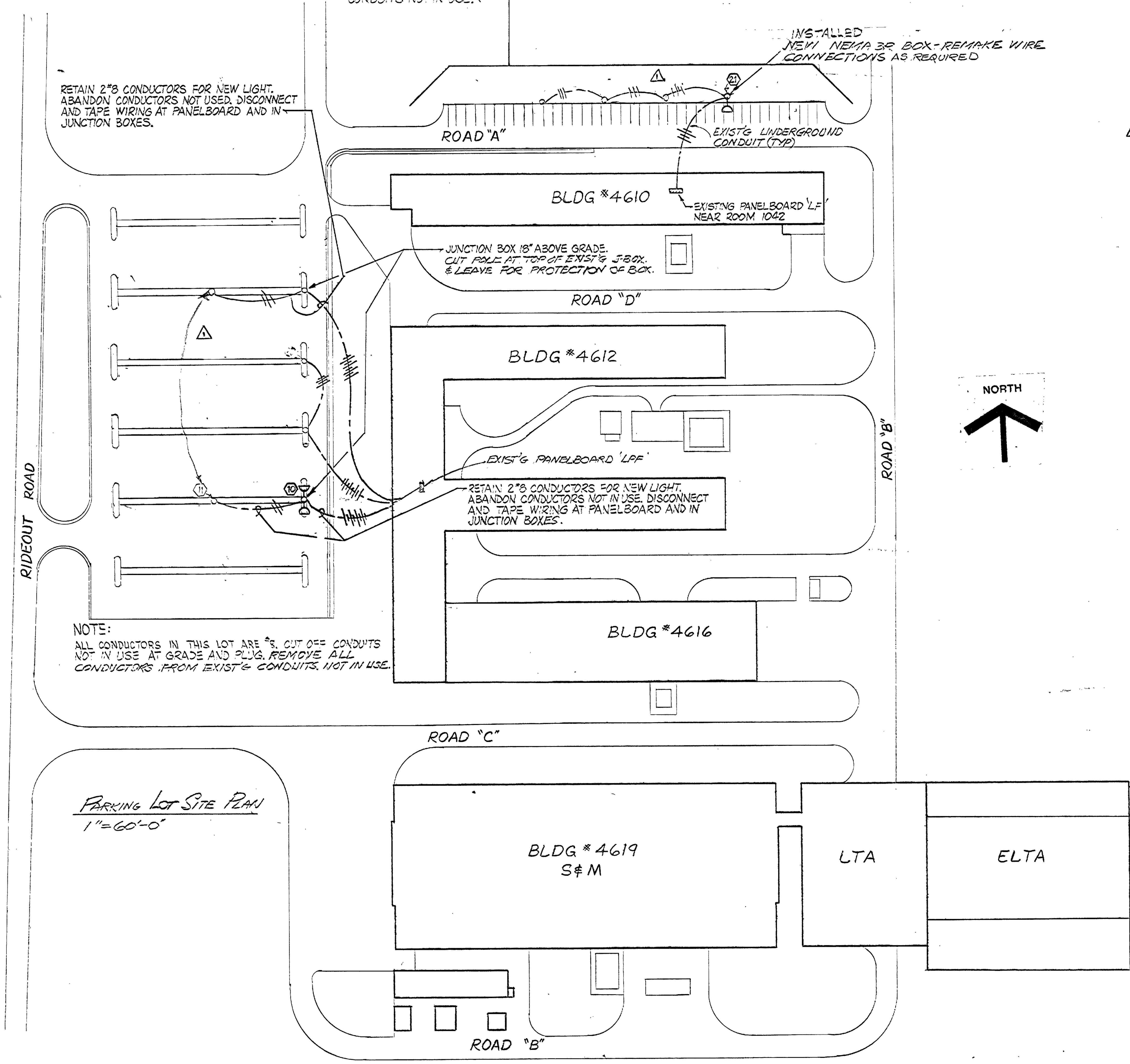

PARKING LOT SITE PLAN
1" = 60'-0"

LIGHTING FIXTURE SCHEDULE

TYPE	MANUFACTURER	CAT. NO.	LAMPS	MOUNTING	REMARKS
1 (Δ1)	WESTINGHOUSE	LWC15277ARF	150W HPS	*PENDANT HANGER	CERAMULUX II LAMP
2	DO	FC-25-277-H2-F	250W HPS	DO	DO
3	LITHONIA	SC-240-SCA	2-F40 WATT MISER II	SURFACE	W/ MAXIMISER II BALLAST 120V.
4	NOT USED	—	—	—	—
5	COLUMBIA	414-B	1-F40 WATT MISER II	BRACKET	120V.
6	NOT USED				
7	KIM LIGHTING CO.	5SQ-III	1-400 WATT HPS	35' POLE KIM #PCQ-35-M&A	MED. BRONZE FIN. KIM # MB-A
8	HOLOPHANE	903-HPS-120	70 W.H.P.S.	EXISTING 3/4" CONDUIT	OPEN REFLECTOR 120V.
9	CROUSE-HINDS	GAF-W	400 W.H.P.S	BRACKET-MATCH EXIST.	480V.
10	GARDCO LIGHTING CO.	H-1913	1-200W.H.P.S.	30 FT. POLE-KIM #ETRSA-30A	TYPE III LIGHT DIST. MED. BRONZE FIN-MBCA
11	PRESCOLITE	WB-48	1-100W	BRACKET	
12	LITHONIA	ESIG	2-25W	SURFACE	EXIT SIGN SINGLE FACE

*— MOUNTING HEIGHT TO BE SAME AS EXISTING

NOTE 2
BALLAST SUPPLY CIRCUIT TO HAVE IN-LINE FUSE HOLDER & FUSE. ALL DIFFUSER SHALL BE 0.125" ACRYLIC KSH K-12.

LEGEND

SYMBOL	DESCRIPTION	MT'G. HT.
(solid line)	CONDUIT & WIRE, NEW-CONCEALED ABOVE CEILING	—
(dashed, ER)	CONDUIT EXPOSED, EXISTING TO REMAIN	—
(dash line)	CONDUIT & WIRE, NEW-SURFACE OR PENDANT MT'D EXPOSED	—
⟨1⟩	NOTE, NUMBER AS INDICATED	—
(S)	EXISTING SPEAKER	—
◇1	DESIGNATES FIXTURE TYPE, SEE FIXTURE SCHEDULE	—
(1/2)	NEW LO-BAY LIGHT FIXTURE, HIGH PRESSURE SODIUM-SEE ⟨1⟩ & ⟨2⟩	
○	SURFACE MTD. INCANDESCENT FIXTURE (EXISTING)	—
⊢○	WALL BRACKET FIXTURE (EXISTING)	—
▭	RECESSED FLUORESCENT FIXTURE (DASHED FIXTURE TO BE REMOVED)	—
▭	SURFACE MTD. FLUORESCENT FIXTURE (DASHED FIXTURE TO BE REMOVED)	—
□	A/C DIFFUSER	—
S	SINGLE POLE FLUSH MTD. (EXIST. UNLESS NOTED OTHERWISE)	48"
S_3	THREE-WAY TOGGLE SW, 20A 277V SURFACE MOUNT (NEW)	48"
○-◁	EXISTING WOOD POLE & INCAND. FIXTURES TO BE REMOVED	—
		—
▬	EXISTING LIGHTING PANEL	—
		—
(J)	NEW JUNCTION BOX.	—
A.F.F.	ABOVE FINISHED FLOOR	—
NIC	NOT IN CONTRACT	—
(emergency light)	EXISTING EMERGENCY LIGHT	—
⊗	EXISTING EXIT LIGHT	—
⊗	NEW EXIT LIGHT, SEE FIXTURE SCHEDULE TYPE ⟨12⟩	—

*APPROXIMATE COUNT OF FLUORESCENT FIXTURES TO BE REMOVED, ~~[illegible]~~ SEE NOTE 'H' SH E-1				Q'TY *
4-40 WATT	2'x4'	RECESSED	TROFFER REMOVED	44
4-40 WATT	2'x4'	RECESSED	TROFFERS REINSTALLED AT DIFFERERENT LOCATIONS	36 (46)
2-40 WATT	1'x4'	RECESSED	TROFFERS REMOVED	35
2-40 WATT	1'x4'	RECESSED	TROFFERS TO BE REINSTALLED	1
[illegible]	[illegible]	[illegible]	[illegible]	[illegible]
[illegible]	[illegible]	[illegible]	[illegible]	
2-110 WATT	4'	INDUSTRIAL	REMOVED & DISPOSED OF	104
OUTSIDE FIXTURES TO BE REMOVED & DISPOSED OF (PARKING LOTS)				42

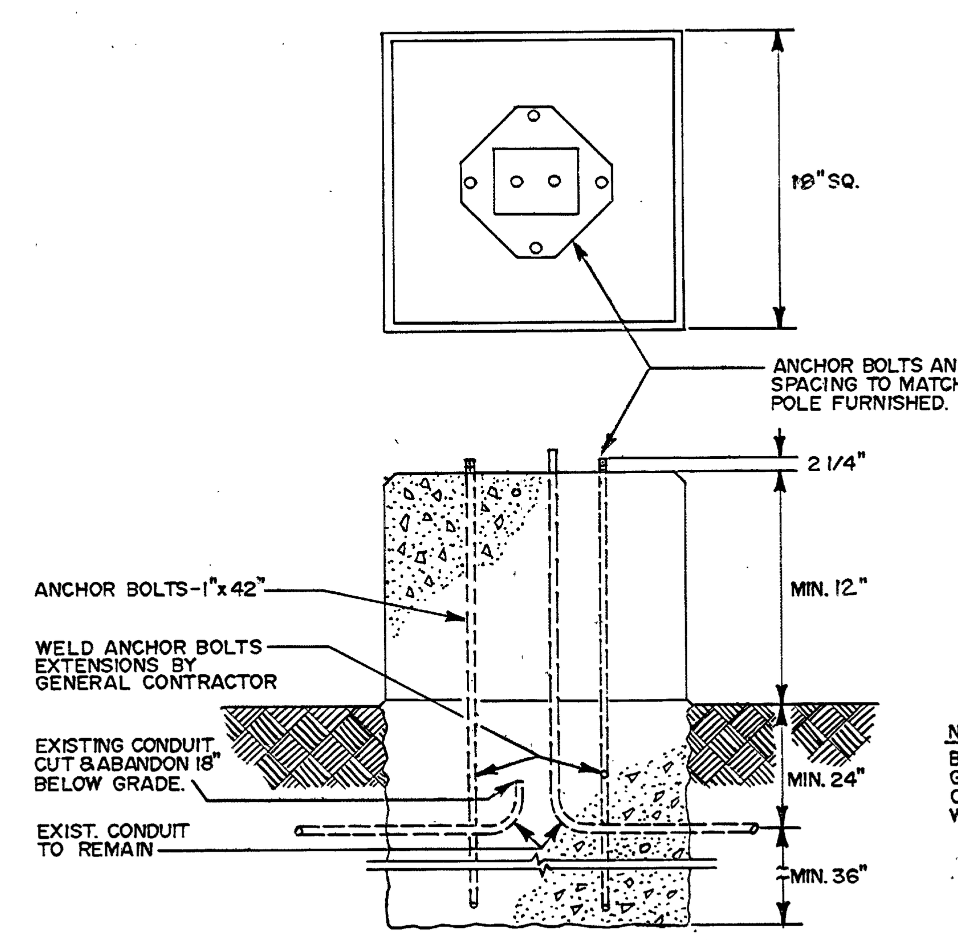

SITE LIGHTING CONCRETE BASE AND ANCHOR BOLT DETAIL
SCALE: (FOR FIXTURES ⑦ & ⑩) NONE

NOTE:
BOND CONDUIT TO POLE W/ #10 GREEN GROUND WIRE. USE GROUNDING BUSHING ON CONDUIT AND SCREW TERMINATE WIRE TO POLE.
TELECOMMUNICATIONS EQUIPMENT AFFECTED BY THIS CONTRACT WORK IS NOT TO BE ALTERED OR REMOVED BY THE CONTRACTOR. CONTACT THE COR IN THE EVENT OF A CONFLICT.

SIGNATURE: [signature] ABOT 12/11/79 — OFFICE SYMBOL — DATE
Jack Walker 12-21-79 CS-21

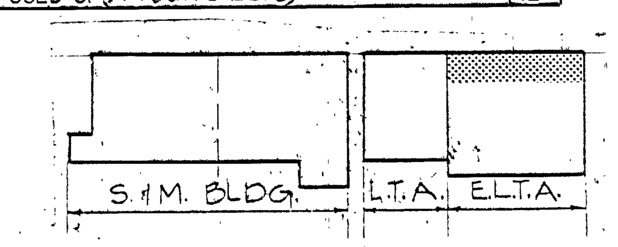

REV.	BY	DATE	REVISION	C.I. NO.	APPROVED
1	Ronnie Robbins	11-30-81	REVISED PER RED LINE - AS BUILT	V-3	TMC 12/18/91

NATIONAL AERONAUTICS AND SPACE ADMINISTRATION
MARSHALL SPACE FLIGHT CENTER — HUNTSVILLE, ALABAMA
SMITH SECKMAN REID, INC

REHABILITATION OF BLDG. 4619 PHASE 2
ELTA-SECOND FLOOR LIGHTING

NASA AE CONTRACT NO. NAS8-33041
FILE NO. MSFC 12072
SUBMITTED: Roger R. Chase — AE: DATE: 9-6-79
APPROVAL RECOMMENDED: [signature] — LAB: DATE: 10 Jan 80
APPROVED: [signature] CHIEF ENGINEERING DIVISION — NASA DATE: 2/14/80
REF. NO. E-2
DESIGNED H.O.N.
DRAWN R.S.
CHECKED R.E.W.
SCALE: SHOWN
APPROVAL RECOMMENDED: [signature] CHIEF, [illegible] BRANCH
DESIGN DATE: 12/26/79
SPEC. NO. F-2C-2001
DWG NO. FAC-BD-4619-E2

MSFC MASTER BID DISK 11-18-2013

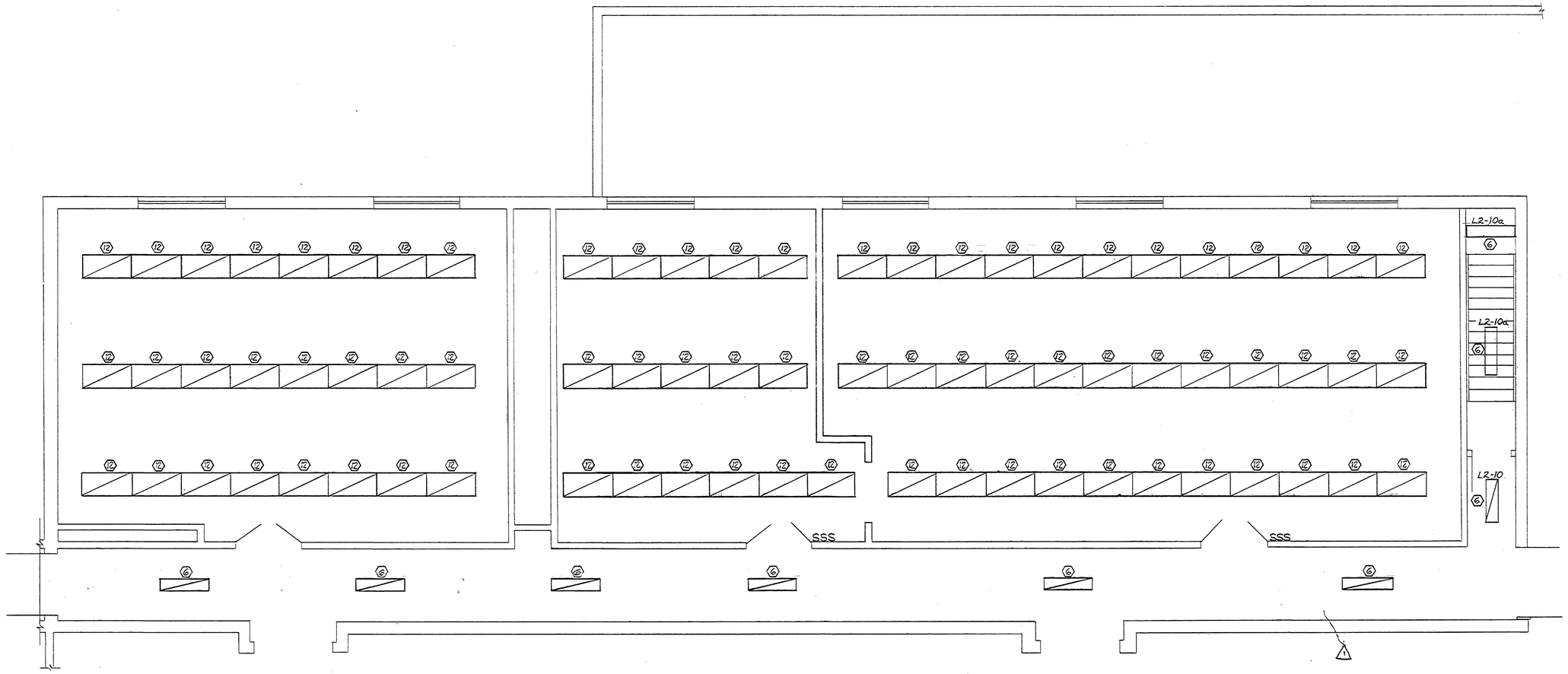

L.T.A. OFFICE LIGHTING PLAN
SCALE: 1/4" =1'-0"

REV.	BY	DATE	REVISION	C.I. NO.	APPROVED
1	RSW	11-30-81	REVISED PER RED LINE AS BUILT	V-3	

NATIONAL AERONAUTICS AND SPACE ADMINISTRATION
MARSHALL SPACE FLIGHT CENTER HUNTSVILLE, ALABAMA
SMITH SECKMAN REID, INC.

REHABILITATION OF BLDG. 4619 PHASE 2
LTA OFFICE LIGHTING

NASA AE CONTRACT NO. NAS8-33041
FILE NO. MSFC 12073

SUBMITTED: Roger R. Chen
AE: DATE: 9-6-79
APPROVAL RECOMMENDED: L.M. Johnson
C&RD DATE: 10 Dec 80
APPROVED: Chief, Engineering Division
NASA DATE: 2/14/80

REF. NO. E-3
DESIGNED W.O.N.
DRAWN R.S.
CHECKED R.E.W.
SCALE: SHOWN
APPROVAL RECOMMENDED: Chief, Engineering Branch
DESIGN DATE: 12/26/79
SPEC. NO. MSC-2001
DWG NO. FAC-SD-4619-E3

Jack Walker
CS-21
12-21-79

TELECOMMUNICATIONS EQUIPMENT AFFECTED BY THIS CONTRACT WORK IS NOT TO BE ALTERED OR REMOVED BY THE CONTRACTOR. CONTACT THE COR IN THE EVENT OF A CONFLICT.
SIGNATURE OFFICE SYMBOL DATE

MSFC - FORM 232 (REV. 7-71)

MSFC MASTER BID DISK 11-18-2013

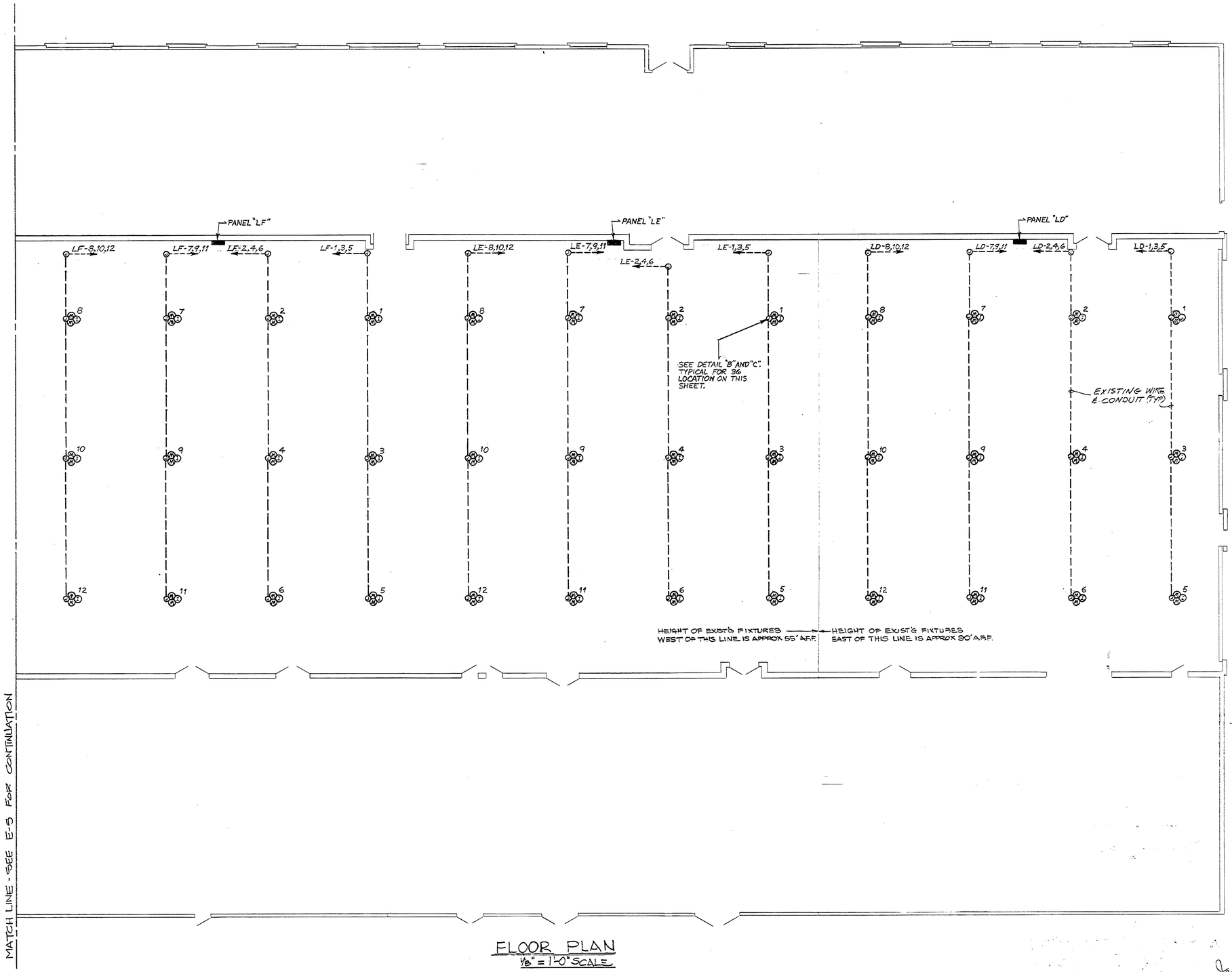

FLOOR PLAN
1/8" = 1'-0" SCALE

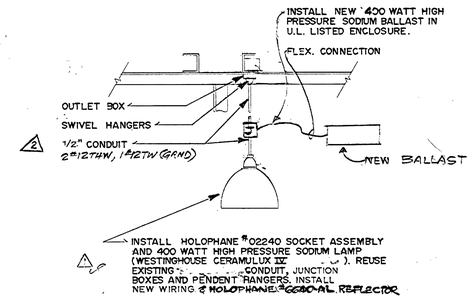

DETAIL "C"
TYPICAL REPLACEMENT INSTALLATION

SCALE: NONE

NOTE:
EXISTING GOVERNMENT OWNED BRIDGE CRANES ARE LOCATED IN THE HIGH BAY AREA OF THE S&M BLDG AND ARE AVAILABLE FOR USE IN THE FIXTURE MODIFICATION WORK OUTLINED ABOVE - CONTRACTOR MUST FURNISH CRANE OPERATOR.

NORTH

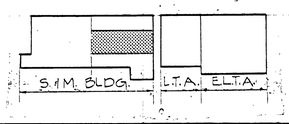

REV.	BY	DATE	REVISION	C.I. NO.	APPROVED
2	Walker	11-30-81	REVISED PER RED LINE AS BUILT	Y-32	
1		1-12-81	INSTALL NOTCHING APPLICATOR & SOCKET ASSEMBLY	36611-1	

NATIONAL AERONAUTICS AND SPACE ADMINISTRATION
MARSHALL SPACE FLIGHT CENTER HUNTSVILLE, ALABAMA
SMITH SECKMAN REID, INC

REHABILITATION OF BLDG. 4619 PHASE 2
S & M HIGH BAY-EAST END

NASA AE CONTRACT NO. NAS8-33041
FILE NO. MSFC 12074

SUBMITTED: Roger R. Clare
A/E DATE: 9-6-79

APPROVAL RECOMMENDED: [signature]
LA&P DATE: 10 March 80

APPROVED: [signature]
CHIEF ENGINEERING DIVISION
NASA DATE: 2/14/80

DESIGNED H.O.N.
DRAWN R.S.
CHECKED R.E.W
SCALE: SHOWN

APPROVAL RECOMMENDED: [signature]
CHIEF, [illegible] BRANCH
DESIGN DATE: 12/26/79
SPEC. NO. MSC-2097

DWG NO. MAC-BD-4619-E4

REF. NO. E-4

TELECOMMUNICATIONS EQUIPMENT AFFECTED BY THIS CONTRACT WORK IS NOT TO BE ALTERED OR REMOVED BY THE CONTRACTOR. CONTACT THE COR IN THE EVENT OF A CONFLICT.
[signature] EB51 12/11/79
SIGNATURE OFFICE SYMBOL DATE

Jack Walker 12-21-79 CS-21

MSFC MASTER BID DISK 11-18-2013

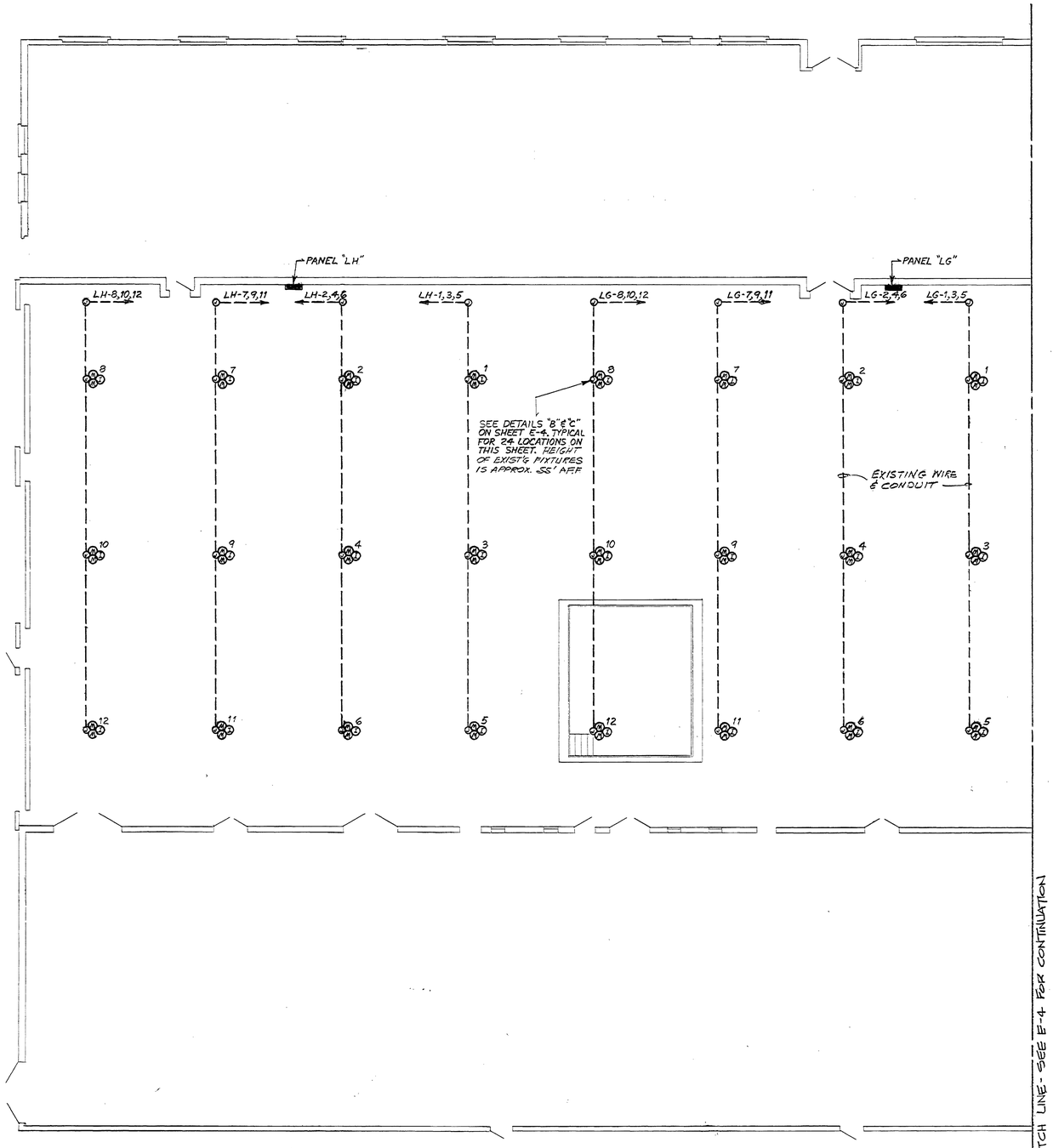

FLOOR PLAN
1/8"=1'-0" SCALE

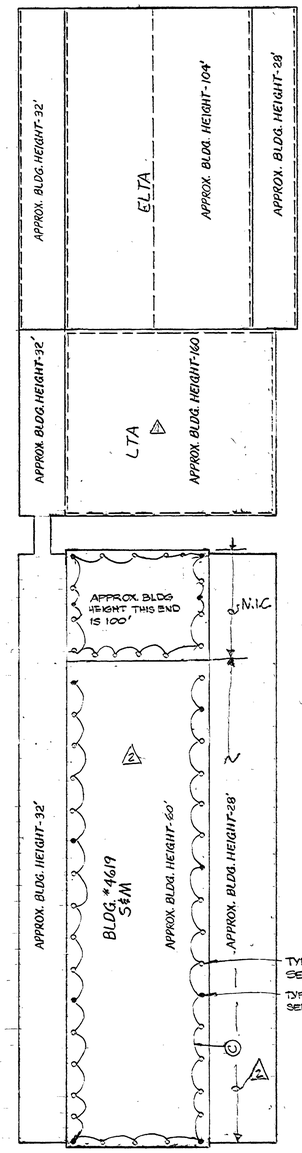

LIGHTNING PROTECTION SYSTEM PLAN
1"=40'

NOTES:
1. EXISTING LIGHTNING PROTECTION SYSTEM.
2. NEW LIGHTNING PROTECTION SYSTEM. SOLID DOT INDICATES POINTS WITH GROUND TAPS SEE DETAILS (A) & (D). CIRCLED INDICATE LOCATION OF COPPER POINT SEE DETAIL (B)

NOTE: ADHESIVE SHALL BE 3M SCOTCH GRIP MASTER ADHESIVE #8196, ROBBINS CATALOGUE #690.

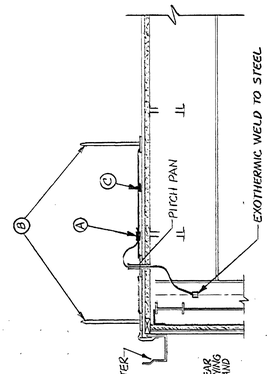

(D) TYPICAL GROUND TAP

NORTH

NOTE TYPICAL FOR ALL CABLE LAID ON BUILT-UP ROOFING

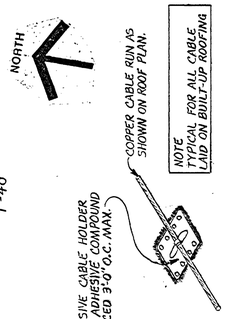

(C) TYPICAL ADHESIVE CABLE HOLDER

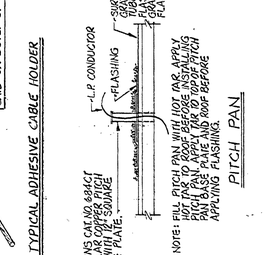

PITCH PAN

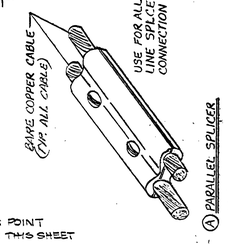

(A) PARALLEL SPLICER

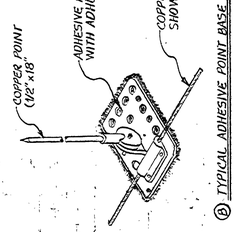

(B) TYPICAL ADHESIVE POINT BASE

REV.	BY	DATE	REVISION	C.I. NO.	APPROVED
3	DC	11-30-81	REVISED PER RED LINE - AS BUILT	Y-3	12/16/81
2	RV	5-4-80	DELETED LIGHTNING PROTECTION SYSTEM FOR LTA.	AMEND #1	5/20/80

NATIONAL AERONAUTICS AND SPACE ADMINISTRATION
MARSHALL SPACE FLIGHT CENTER HUNTSVILLE, ALABAMA
SMITH SECKMAN REID, INC

REHABILITATION OF BLDG. 4619 PHASE 2
S& M HIGH BAY-WEST END

Jack Walker FCS-21 12-21-79

TELECOMMUNICATIONS EQUIPMENT AFFECTED BY THIS CONTRACT WORK IS NOT TO BE ALTERED OR REMOVED BY THE CONTRACTOR. CONTACT THE COR IN THE EVENT OF A CONFLICT.
R. J. Hudson PM51 12/11/79
SIGNATURE OFFICE SYMBOL DATE

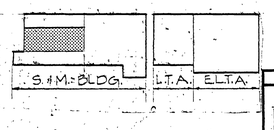

REF. NO. E-5

NASA AE CONTRACT NO. NAS8-33041
FILE NO. MSFC 12075
SUBMITTED: Roger R. Chase AE: DATE: 9-6-79
APPROVAL RECOMMENDED: W. M. Solomon NASA: DATE: 10 Jan 80
APPROVED: [illegible] CHIEF, ENGINEERING DIVISION NASA: DATE: 2/14/80
DESIGNED H.O.N.
DRAWN R.S.
CHECKED R.E.W.
SCALE: SHOWN
APPROVAL RECOMMENDED: [illegible] CHIEF, [illegible] BRANCH
DESIGN DATE: 12/26/79
SPEC. NO. MSC-3001
DWG NO. MAC-BD-4619-E5

MSFC MASTER BID DISK 11-18-2013

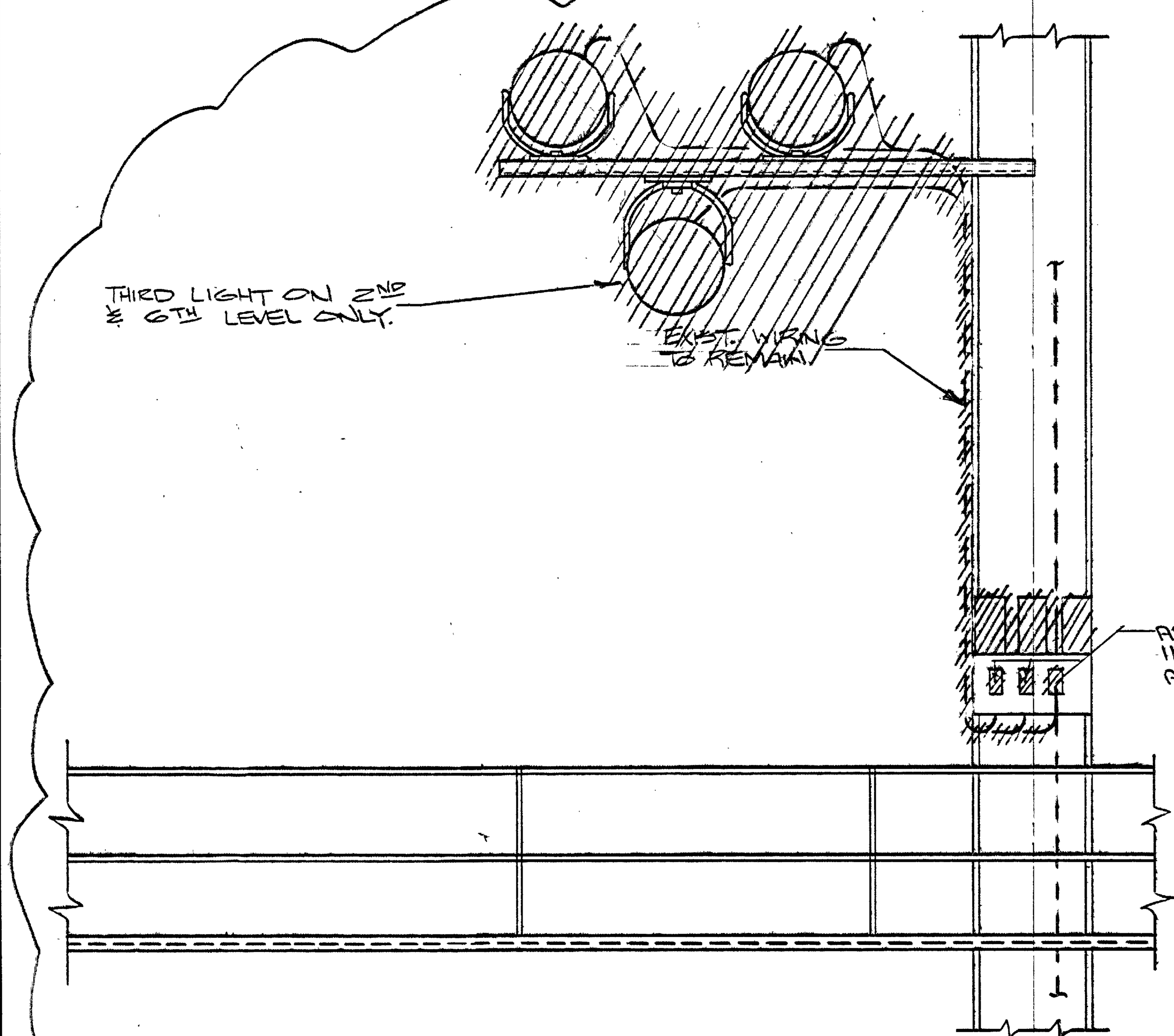

DETAIL "D"
SCALE NONE

LEGEND
//////////// ITEMS TO BE REMOVED

NOTES:

14. NEW TYPE (9) FIXTURES. REMOVED THIRD FIXTURE & DISPOSE OF. TYPICAL FOR ALL FOUR (4) TOWERS AT THIS ELEVATION. SEE DETAIL "D".
15. TWO (2) CROUSE-HINDS CAT #236-1888 BALLAST WITH 1" THREADED NIPPLE. 400 W., H.P.S. 110V. TYPICAL FOR ALL FOUR (4) TOWERS AT THIS ELEVATION. SEE DETAIL "D".
16. THREE (3) NEW TYPE (9) FIXTURES. TYPICAL FOR ALL FOUR (4) TOWERS AT THIS ELEVATION. SEE DETAIL "D".
17. THREE (3) CROUSE-HINDS CAT #236-588 BALLAST WITH 1" THREADED NIPPLE. 400 W., H.P.S. 480 V. TYPICAL FOR ALL FOUR (4) TOWERS AT THIS ELEVATION. SEE DETAIL "D".

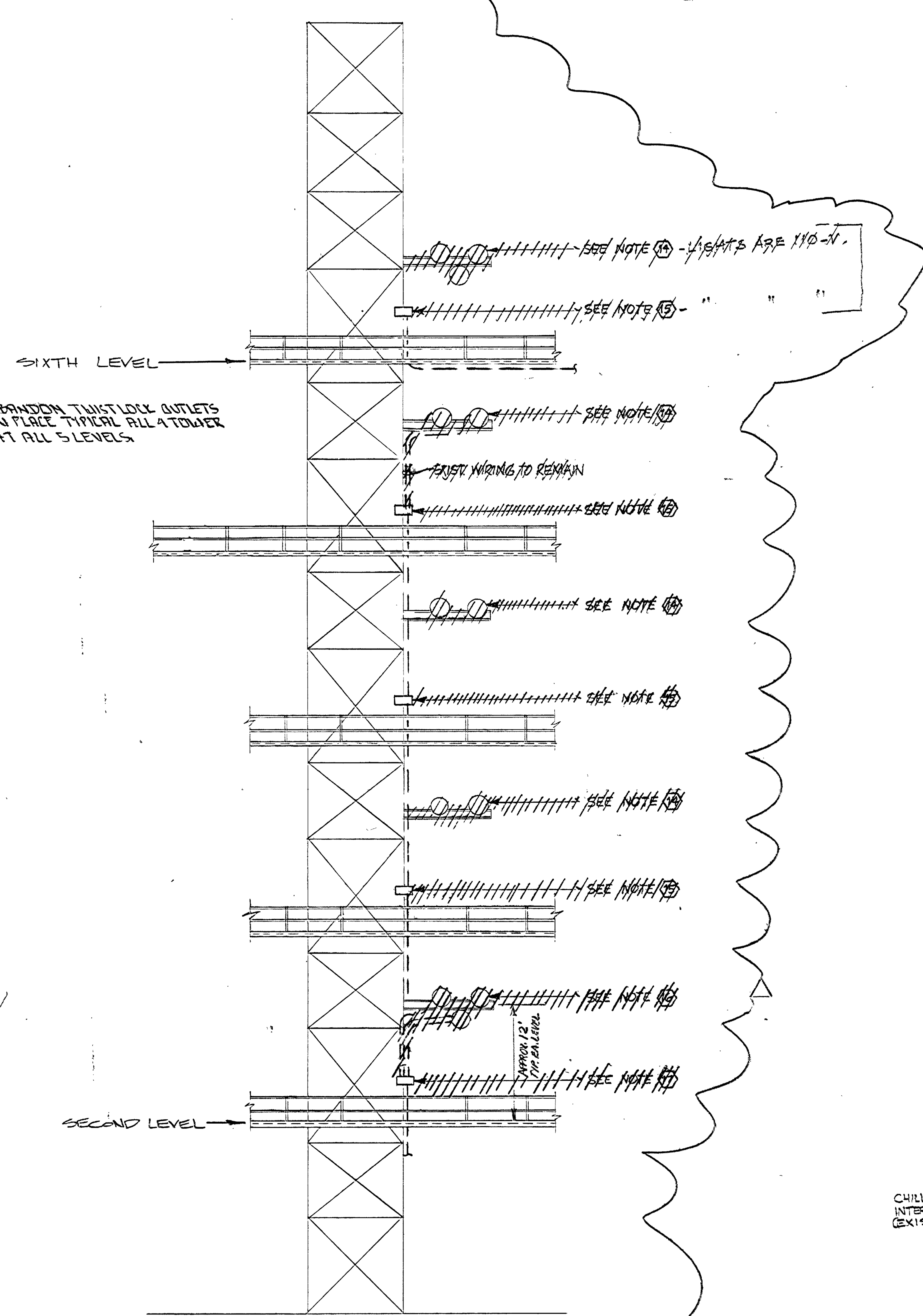

DEMOLITION

TYPICAL N.W. & S.E. TOWER
OPPOSITE HAND FOR S.W. & N.E. TOWERS
SCALE: NONE

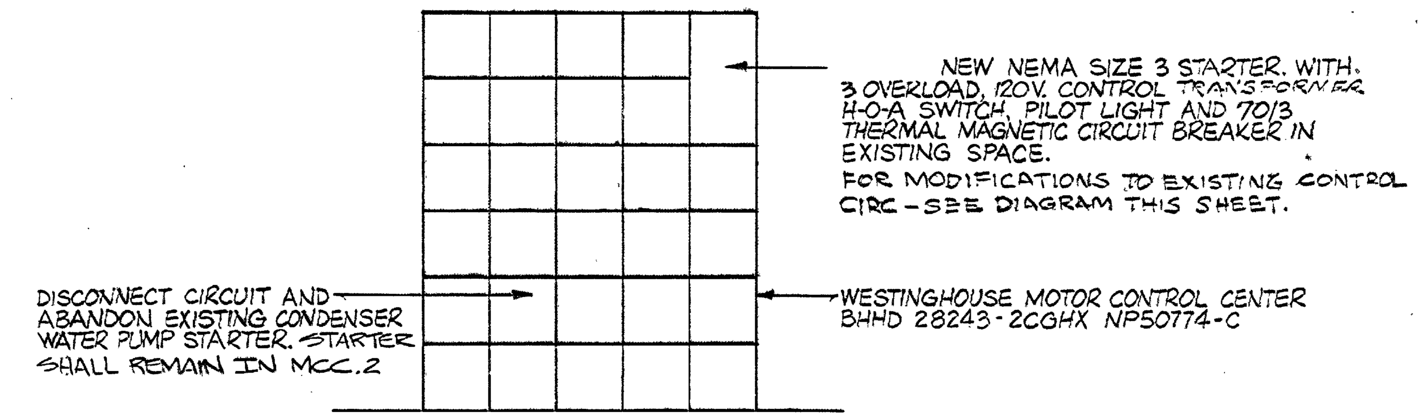

480V. MCC ELEVATION - ELTA EQUIPMENT ROOM
N.T.S.

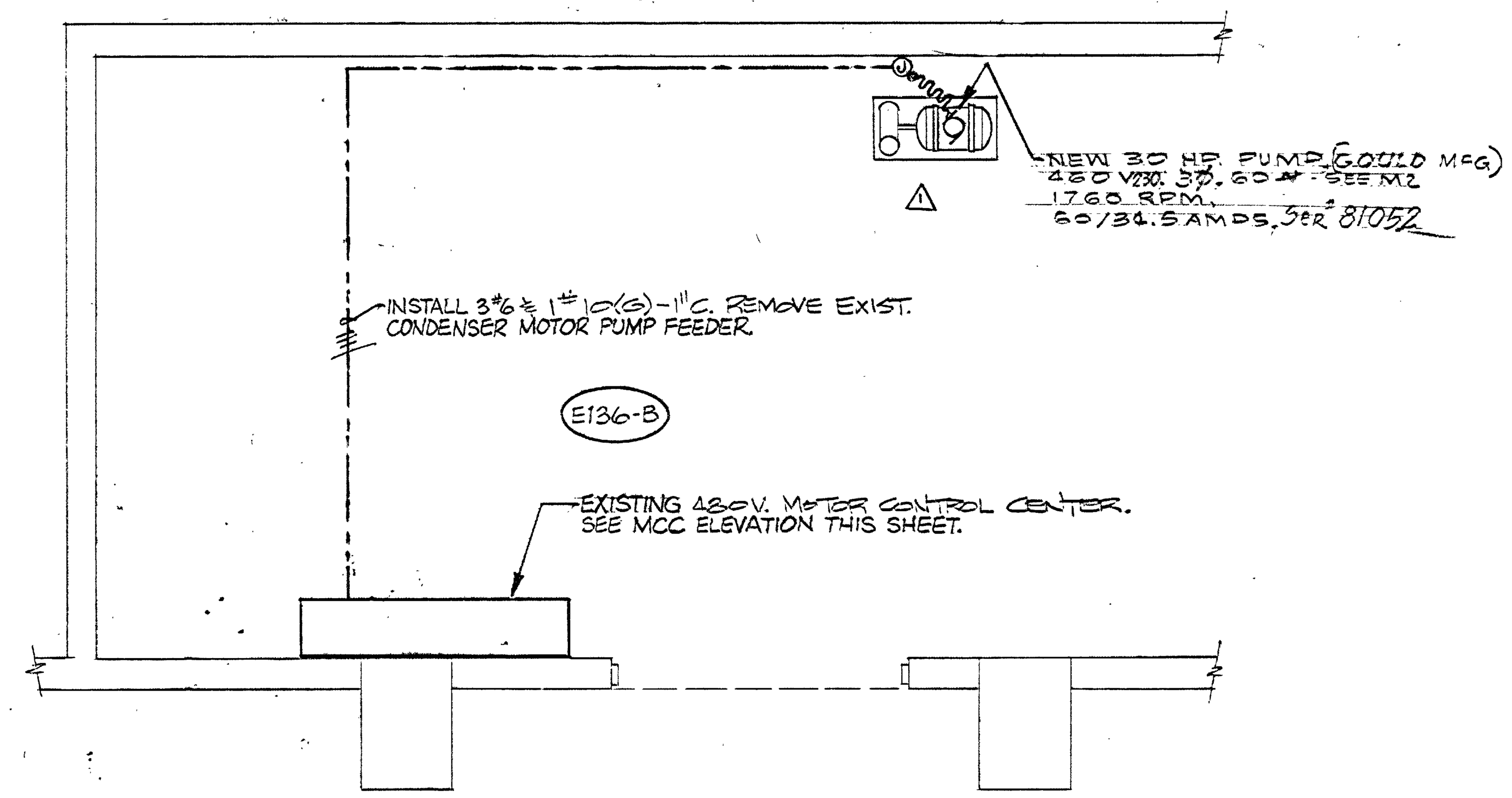

ELTA EQUIPMENT ROOM
SCALE: 1/4"=1'-0"

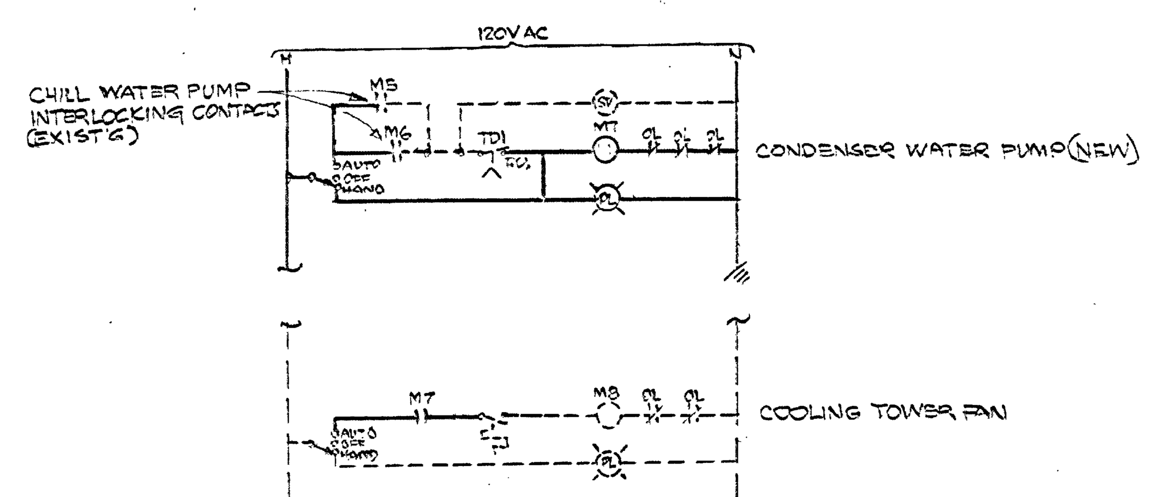

CONTROL CIRCUIT DIAGRAM

NECESSARY MODIFICATIONS ARE SHOWN AS FOLLOWS:
- - - - EXIST'G CONTROL CIRC. WIRING & COMPONENTS TO REMAIN
—— NEW CONTROL CIRC. WIRING TO BE ADDED
PL PILOT LIGHT
OL MOTOR OVERLOADS
TD TIME DELAY RELAY
SV SOLENOID VALVE

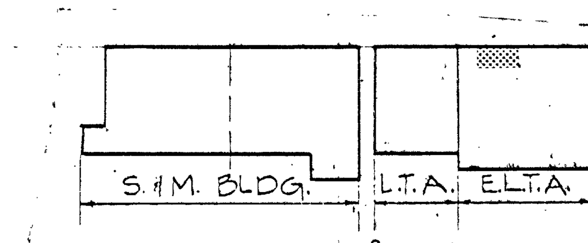

REV.	BY	DATE	REVISION	C.I. NO.	APPROVED
2	JBR	3-15-90	REPLACE HIGH BAY LIGHTING "DEMO"	748-0	3/28/90 3-27-90
1		11-30-81	REVISED PER RED LINE - AS BUILT	Y-3	1-22-82

NATIONAL AERONAUTICS AND SPACE ADMINISTRATION
MARSHALL SPACE FLIGHT CENTER HUNTSVILLE, ALABAMA
SMITH SECKMAN REID, INC

REHABILITATION OF BLDG. 4619 PHASE 2
TEST STAND LIGHTING (LOAD TEST ANNEX)

NASA AE CONTRACT NO. NAS8-33041
FILE NO. MSFC 12076
SUBMITTED: AE DATE: 9-6-79
APPROVAL RECOMMENDED: LAB DATE: 10 Jan 80
APPROVED: CHIEF ENGINEERING DIVISION NASA DATE: 2/14/80
DESIGNED H.O.N.
DRAWN R.S.
CHECKED R.E.W.
SCALE: SHOWN
APPROVAL RECOMMENDED: CHIEF BRANCH
DESIGN DATE: 12/26/79
SPEC. NO.
DWG NO. FAC-BD-4619-E6
REF. NO. E-6

Jack Walker CS-21 12-21-79

TELECOMMUNICATIONS EQUIPMENT AFFECTED BY THIS CONTRACT WORK IS NOT TO BE ALTERED OR REMOVED BY THE CONTRACTOR. CONTACT THE COR IN THE EVENT OF A CONFLICT.
SIGNATURE: OFFICE SYMBOL: AS51 DATE: 12/11/79

MSFC MASTER BID DISK 11-18-2013

DOCUMENT INPUT RECORD - MSFC DOCUMENTATION REPOSITORY

I. GENERAL INFORMATION

1. APPROVED PROJECT:	2. DOCUMENT/ DRAWING NUMBER:	3. CONTROL NUMBER:	4. RELEASE DATE:	5. SUBMITTAL DATE:
Facilities	FAC-BD-4619		02/14/1980	08/22/2006

6. DOCUMENT/DRAWING TITLE:	7. REPORT TYPE:
REHABILITATION OF BUILDING 4619, PHASE II	

8. CONTRACT NUMBER / PERFORMING ACTIVITY:	9. DRD NUMBER:	10. DPD / DRL / IDRD NUMBER:
NNM05AB09C		

11. DISPOSITION AUTHORITY (Check One):	12. SUBMITTAL AUTHORITY:	13. RELEASING AUTHORITY:
☐ Official Record - NRRS _____ ☒ Reference Copy - NRRS 8/5/A/3 (destroy when no longer needed)	KAREN FRANCIS / SEI AS22	

14. SPECIAL INSTRUCTIONS:

15. CONTRACTOR/SUBMITTING ORGANIZATION, ADDRESS AND PHONE NUMBER:	16. ORIGINATING NASA CENTER:
KAREN FRANCISSEI GROUP / AS22 BUILDING 4241, ROOM116 MSFC, AL 35/12 (256)-544-7942	17. OFFICE OF PRIMARY RESPONSIBILITY:

18. PROJECT CODE: 02400	19. NUMBER OF PAGES: 16

II. ENGINEERING DRAWINGS

20. REVISION:	21. ENGINEERING ORDER:	22. PARTS LIST:	23. CCBD:
1,2			

III. REPORTS, SPECIFICATIONS, ETC.

24. REVISION:	25. CHANGE:	26. VOLUME:	27. BOOK:	28. PART:	29. SECTION:

30. ISSUE:	31. ANNEX:	32. SCN:	33. DCN:	34. AMENDMENT:

35. APPENDIX:	36. ADDENDUM:	37. CCBD:	38. CODE ID:	39. IRN:

IV. EXPORT AND DISTRIBUTION RESTRICTIONS

- ☐ Privacy Act (see MWI 1382.1)
- ☐ Proprietary (see MPD 2210.1, MPR 7120.3)
- ☐ Patent (see MPR 2220.1)
- ☐ ITAR (see MPR 2220.1, MPD 2190.1)
- ☐ EAR (see MPR 2220.1, MPD 2190.1)
- ☐ Other ACI (see NPR 1600.1, MPR 1600.1) _____
- ☒ No statutory or institutional restrictions applicable -- material may be electronically distributed to user in the NASA domain

V. DOCUMENTATION SUBMITTER (NASA OR CONTRACTOR)

40. ORG. CODE:	41. PHONE NUMBER:	42. NAME:	43. SIGNATURE/DATE:
SEI (AS22)	(256) 544-7942	KAREN FRANCIS	08/22/06

VI. TO BE COMPLETED BY MSFC DOCUMENTATION REPOSITORY

44. RECEIVED BY:	45. DATE RECEIVED:	46. WORK ORDER:
Kim Miller	8/28/06	03-013311-6

MSFC MASTER BID DISK 11-18-2013

REPAIR HIGH BAY ROOF OF STRUCTURES & DYNAMICS LABORATORY (4619)

NASA

MARSHALL SPACE FLIGHT CENTER
HUNTSVILLE, ALABAMA 35812

TIPPETT CLEPPER ASSOCIATES / ARCHITECTS
DECEMBER 21, 1994
A/E CONTRACT NO. NASA 8-39884

INDEX OF DRAWINGS

DWG. NO.	TITLE	DWG. NO.	TITLE
T1	INDEX, LOCATION MAPS, LEGEND & SYMBOLS	M1	EAST ROOF PLAN - MECHANICAL PLAN
A1	PARTIAL ROOF PLAN - EAST	E1	EAST ROOF PLAN - ELECTRICAL PLAN
A2	ELEVATIONS AND ROOF DETAILS		
S1	EAST ROOF PLAN		
S2	SECTIONS, DETAILS		

LEGEND OF SYMBOLS

ROOF L7 — BUILDING SEGMENT IDENTIFICATION

NORTH ARROW

A / A20 — INDICATES SECTION NUMBER; SECTION REFERENCE; INDICATES SHEET NUMBER ON WHICH SECTION IS DRAWN

RP3 — METAL PANEL / GUTTER TYPE – RP = ROOF PANEL, G = GUTTER

1 / A.2 — ELEVATION KEY

LEGEND OF ABREVIATIONS

CJ	CONTROL JOINT
DS	DOWNSPOUT
M	METER
mm	MILLIMETER
NIC	NOT IN CONTRACT
NTS	NOT TO SCALE
TS	TUBULAR STEEL
UNO	UNLESS NOTED OTHERWISE

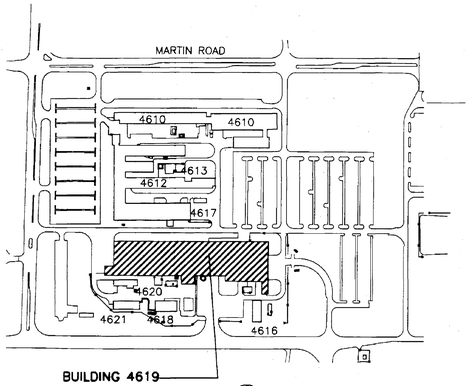

LOCATION MAP (NTS)

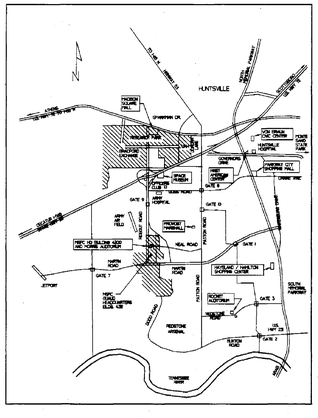

VICINITY MAP (NTS)

SYSTEMS

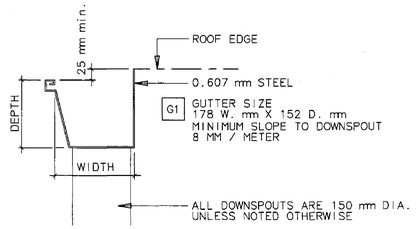

GUTTER PROFILE

N.T.S.

GUTTER PROFILES SHOWN MAY NOT BE AVAILABLE AS A STANDARD PRODUCT OF THE ROOFING MANUFACTURER. THE PROFILE AND PROPORTIONS OF THE GUTTER SHALL MATCH THIS DRAWING.

DOWNSPOUTS WILL REQUIRE FASTENERS THROUGH EXISTING ASBESTOS PANELS. THESE HOLES WILL BE PROVIDED BY NASA AFTER LOCATIONS HAVE BEEN IDENTIFIED BY THE CONTRACTOR.

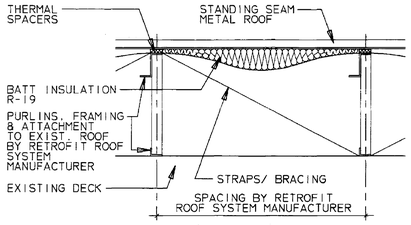

ROOF RP2 FED SPEC 25109 BLUE RP2

N.T.S.

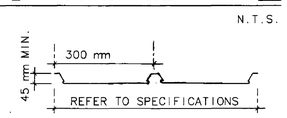

STANDING SEAM ROOF PROFILE

N.T.S.

HANDLING, DUST CONTROL AND REMOVAL OF ASBESTOS MATERIAL

THE CONTRACTOR SHALL REMOVE ASBESTOS CONTAINING MASTIC AROUND THE ROOF HATCH ON ROOF H1. SAMPLES TAKEN FROM VARIOUS LOCATION OF THE ROOF AND TESTED BY NASA INDICATE THAT NO OTHER AREAS OF THE ROOF CONTAIN ASBESTOS. IF THE CONTRACTOR ENCOUNTERS ANY ADDITIONAL ASBESTOS CONTAMINATED MATERIALS ON THE ROOF, THEY SHALL STOP WORK IN THAT AREA IMMEDIATELY AND CONTACT THE CONTRACTING OFFICER FOR FUSTHER DIRECTIONS. THE FOLLOWING NOTES APPLY ONLY TO THE REMOVAL OF ASBESTOS CONTAINING MASTIC AROUND THE ROOF HATCH:

A. WORKER PROTECTION AND PRACTICES SHALL CONFORM WITH OSHA SAFETY AND HEALTH STANDARDS (29 CFR, 1910.1001 & 1926.1101)

B. ALL WORKERS SHALL WEAR AN APPROVED ASBESTOS RESPIRATOR AND APPROVED PROTECTIVE CLOTHING.

C. NO ASBESTOS FIBERS SHALL BE ALLOWED TO ENTER THE INTERIOR OF THE BUILDING. WORK AREAS SHALL BE SEALED OFF TO PREVENT DUST AND DEBRIS FROM BEING DISTRIBUTED OVER A WIDE AREA.

THE CONTRACTOR SHALL SUBMIT A DETAILED WRITTEN PLAN FOR APPROVAL WHICH SHALL DESCRIBE THE METHODS AND EQUIPMENT TO BE USED TO ACHIEVE THE ASBESTOS REMOVAL IN CONFORMANCE WITH THE REQUIREMENTS LISTED ABOVE. THE CONTRACTOR SHALL PROVIDE THE CONTRACTING OFFICER WITH A MINIMUM 30 DAY NOTICE PRIOR TO START OF ASBESTOS WORK. NO WORK SHALL PROCEED UNTIL APPROVAL OF ASBESTOS PLAN HAS BEEN GRANTED BY THE CONTRACTING OFFICER.

PAINTING NOTES

PAINT ALL EXTERIOR MATERIAL THAT IS NOT SCHEDULED TO BE PRE-FINISHED AS FOLLOWS:

FERROUS METAL:
ALKYD GLOSS
1. BOTTOM COAT: KEN KROMIK UNIVERSAL METAL PRIMER (VOC COMPLYING) B56 WZ1/WHITE, 3.0 DFM
2. INTERMEDIATE COAT: SAME AS TOP COAT
3. TOP COAT: INDUSTRIAL ENAMEL B54 SERIES; 2.0 DFM.

GALVANIZED METAL:
ALKYD GLOSS
1. BOTTOM COAT: GALVITE PAINT B56 W3; 2.0 DFM
2. INTERMEDIATE COAT: SAME AS TOP COAT
3. TOP COAT: INDUSTRIAL ENAMEL B54 SERIES; 2.0 DFM.

PRODUCTS OF OTHER MANUFACTURERS THAT MEET OR EXCEED THE PERFORMANCE OF THE SPECIFIED PRODUCTS MAY BE SUBMITTED TO THE CONTRACTING OFFICER FOR CONSIDERATION IN ACCORDANCE WITH SUBSTITUTION REQUIREMENTS OF THE CONTRACT DOCUMENTS.

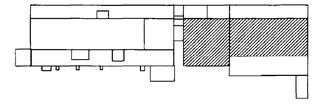

SHEET KEY PLAN

CONCURRENCE: 11/13/95
CONCURRENCE: 1/1/1
CONCURRENCE: 1/1/1
CONCURRENCE: 1/1/1
MAINTENANCE
CONCURRENCE: 11/17/1951
USING OFFICE
CONCURRENCE: 11/29/95
ENVIRONMENTAL HEALTH
CONCURRENCE: 1/24/95
SAFETY OFFICE
CONCURRENCE: 12/21/94
COMMUNICATIONS OFFICE

TELECOMMUNICATIONS EQUIPMENT AFFECTED BY THIS CONTRACT WORK IS NOT TO BE ALTERED OR REMOVED BY THE CONTRACTOR. CONTACT THE COTR IN THE EVENT OF A CONFLICT.

REF. NO.

T1

REV.	BY	DATE	REVISION	C.I. NO.	APPROVED

NASA MARSHALL SPACE FLIGHT CENTER
HUNTSVILLE, ALABAMA 35812

REPAIR HIGH BAY ROOF OF
STRUCTURES & DYNAMICS LABORATORY (4619)

INDEX, LOCATION MAPS
LEGENDS & SYMBOLS

AE FIRM: TIPPETT CLEPPER ASSOCIATES
NASA AE CONTRACT NO. NASA 8-39884

SUBMITTED: RE: DATE: 12/21/94
APPROVAL RECOMMENDED: ARD2 DATE: 1-3-95
APPROVED - CHIEF ENGINEERING DIVISION: ADA1 DATE: 2/1/95

DESIGNED BLP
DRAWN DMW
CHECKED RSS
SCALE: NO SCALE

APPROVAL RECOMMENDED: CHIEF, ARCHITECTURAL BRANCH
DESIGN DATE: 12-29-95
SPEC. NO. M4067

DWG NO FAC-DF-4619-T1

STATE OF GEORGIA — STEVEN W. CRAWFORD — CERTIFICATE NO. — REGISTERED ARCHITECT

FILE NAME: RPF-T1.WMF

MSFC MASTER BID DISK 11-18-2013

ARCHITECTURAL NOTES (THIS SHEET ONLY)

NOTE	DESCRIPTION	ACTION	OTHER
1	GRAVITY VENTILATOR	– EXISTING ROOF VENTILATOR TO BE REMOVED & DISCARDED – PROVIDE NEW GRAVITY VENTILATORS TO FIT EXISTING THROAT OPENING – REFER TO NOTE 1 ON DRAWING M1 FOR SCOPE OF WORK REGARDING ROOF VENTILATOR.	
2	ROOF H1 & H2	– REMOVE EXISTING ROOFING DOWN TO EXISTING DECK PROVIDE NEW ROOFING – SEE SYSTEM DRAWING	SEE ALSO GENERAL NOTES AND SPECIAL NOTES REGARDING RETROFIT ROOFS.

SPECIAL NOTES REGARDING RETROFIT ROOFS:

1. THE RETROFIT ROOFING SYSTEM SHALL BE THE RESPONSIBILITY OF A SINGLE MANUFACTURER WHO IS REGULARLY ENGAGED IN THE FABRICATION AND ERECTION OF THE ROOF SYSTEM. THE MANUFACTURER SHALL BE RESPONSIBLE FOR THE ENGINEERING AND DESIGN OF ALL COMPONENTS USED IN THE FABRICATION AND ERECTION OF THE ROOF SYSTEM.
2. THE EXISTING BUILDING WILL REMAIN OCCUPIED DURING THE COURSE OF CONSTRUCTION. THE CONTRACTOR SHALL EXERCISE EXTREME CAUTION TO MAINTAIN SAFE CONDITIONS FOR OCCUPANTS OF THE BUILDING.
3. THE CONTRACTOR SHALL MAINTAIN COMPLETE WEATHER TIGHTNESS OF THE BUILDING DURING CONSTRUCTION.
4. THE CONTRACTOR SHALL SUBMIT A DETAILED WORK PLAN FOR REMOVAL OF EXISTING ROOF, INSTALLATION OF NEW ROOF SYSTEM AND TEMPORARY PROTECTIVE MEASURES PROPOSED TO KEEP THE EXISTING BUILDING WEATHER TIGHT. THIS PLAN SHALL BE SUBMITTED TO THE CONTRACTING OFFICER PRIOR TO COMMENCING ANY WORK.

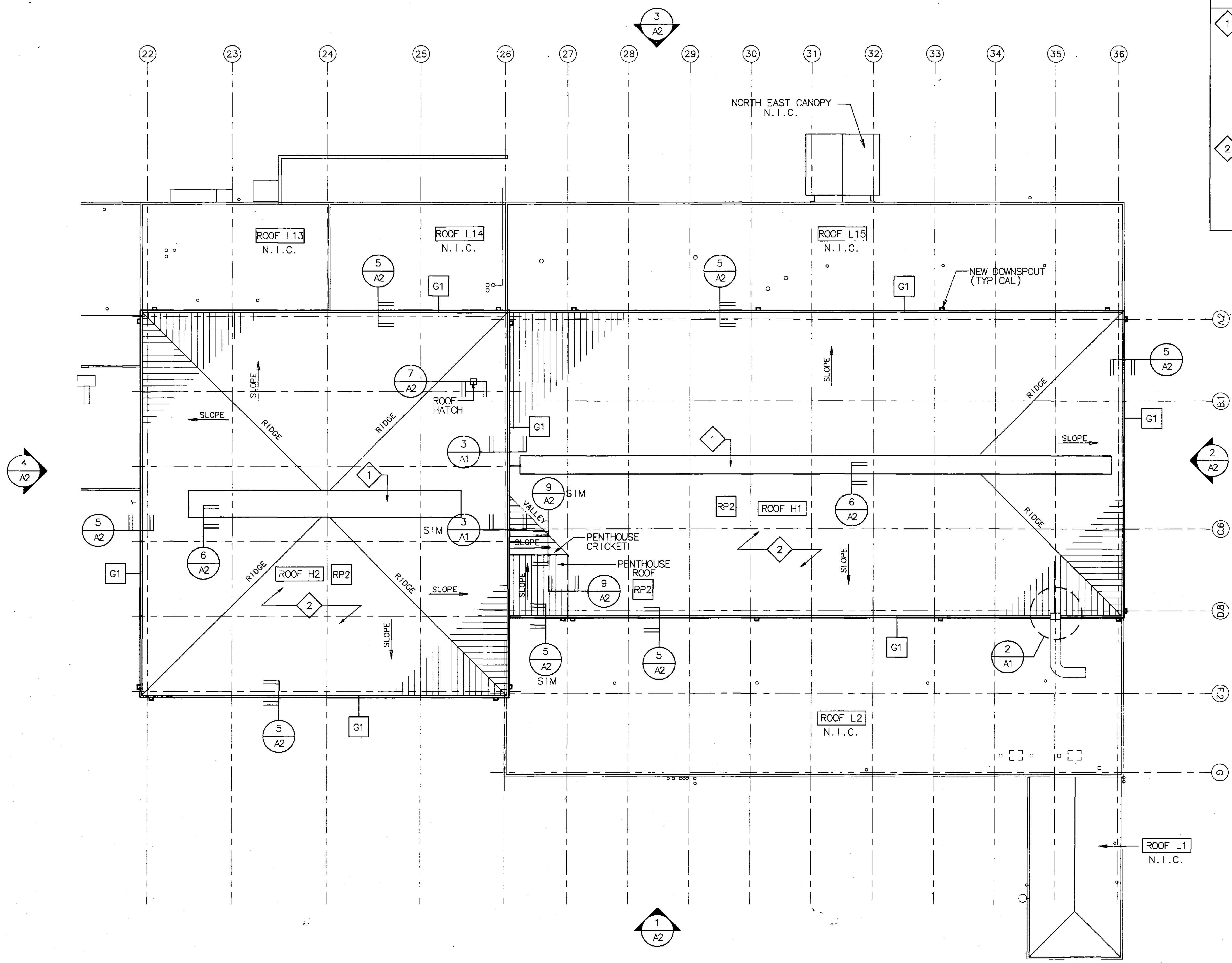

1 PARTIAL ROOF PLAN – EAST
A1 1:200

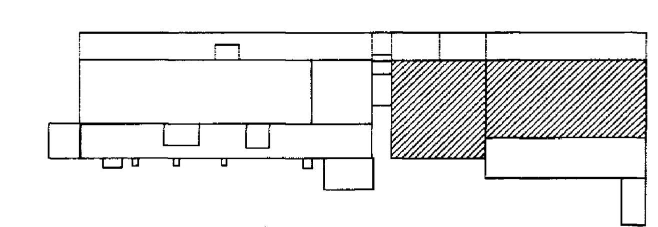

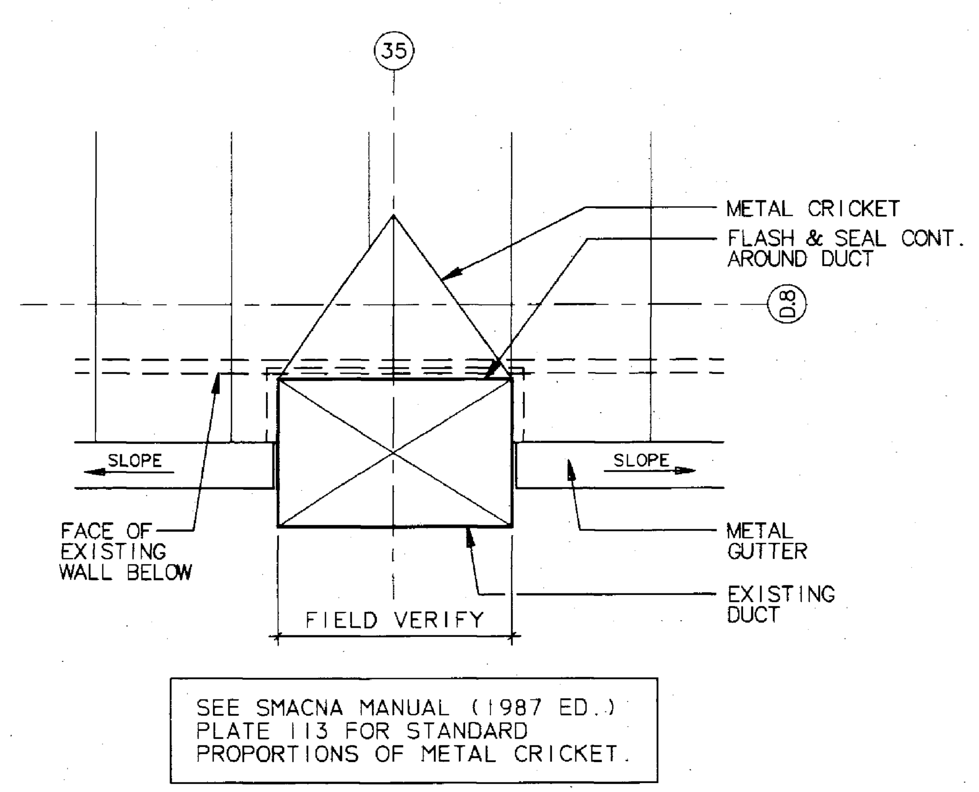

2 PLAN DETAIL @ DUCT
A1 1:10

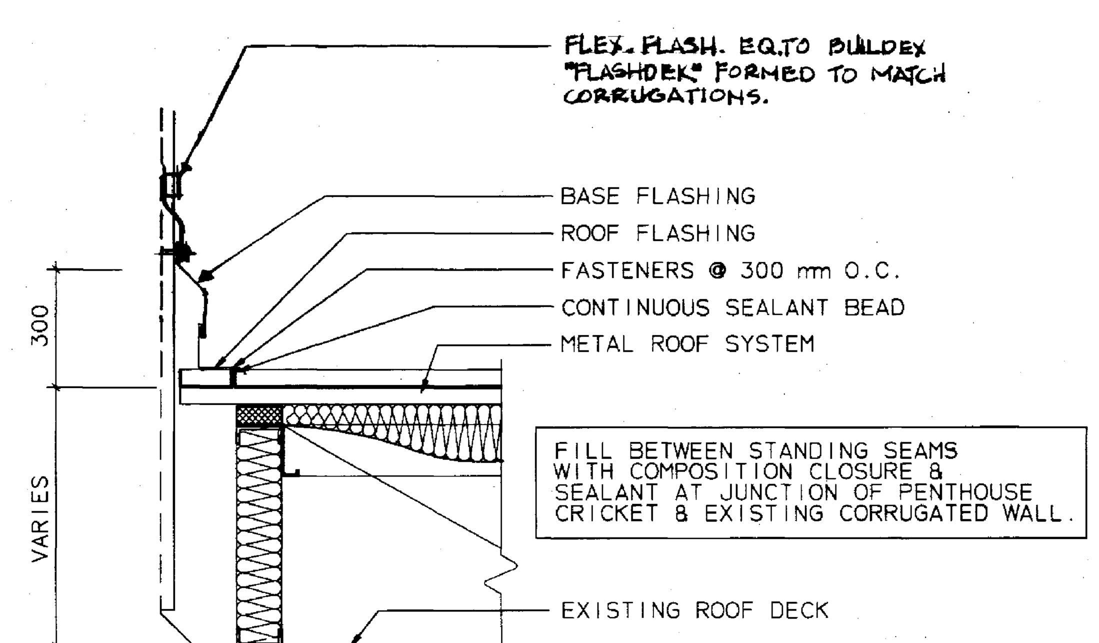

3 SECTION DETAIL
A1 1:10

GENERAL NOTES:

1. ALL ROOF SLOPES ARE 1:24 UNLESS NOTED OTHERWISE.
2. SEE "SPECIAL NOTES REGARDING RETROFIT ROOFS."
3. DRAWINGS INDICATE APPROXIMATE LOCATIONS OF DOWNSPOUTS. NEW DOWNSPOUTS SHALL BE LOCATED SO THAT THEY ALIGN WITH WINDOW MULLIONS WHEN CROSSING WINDOWS
4. PROVIDE NEW PRECAST CONCRETE SPLASH BLOCKS AT BOTTOM OF EACH DOWNSPOUT.
5. OVERHANG AT PENTHOUSE SOUTH FACE SHALL BE SAME AS SHOWN – EXISTING STRUCTURAL CONDITION VARIES
6. ALL FLASHING AND EXPOSED METAL TO BE PREFINISHED UNLESS NOTED OTHERWISE
7. ALL CRICKETS ARE TO BE SAME MATERIAL, GUAGE AND CONSTRUCTION AS METAL ROOF SYSTEM.
8. CONTRACTOR SHALL REMOVE THE EXISTING ROOFING DOWN TO THE METAL DECK. (SEE SPECIAL NOTES ON THIS SHEET)

NASA MARSHALL SPACE FLIGHT CENTER HUNTSVILLE, ALABAMA 35812

REPAIR HIGH BAY ROOF OF STRUCTURES & DYNAMICS LABORATORY (4619)

PARTIAL ROOF PLAN – EAST

AE FIRM: TIPPETT CLEPPER ASSOCIATES

NASA AE CONTRACT NO. NASA 8-39884

DATE: 12/21/94

DESIGNED BLP

DRAWN DWW

CHECKED RSS

SCALE: VARIES

SPEC. NO. M4067

A1

DWG NO FAC-DF-4619-A1

TELECOMMUNICATIONS EQUIPMENT AFFECTED BY THIS CONTRACT WORK IS NOT TO BE ALTERED OR REMOVED BY THE CONTRACTOR. CONTACT THE COTR IN THE EVENT OF A CONFLICT.

FILE NAME: RPE-RP.VMF

MSFC MASTER BID DISK 11-18-2013

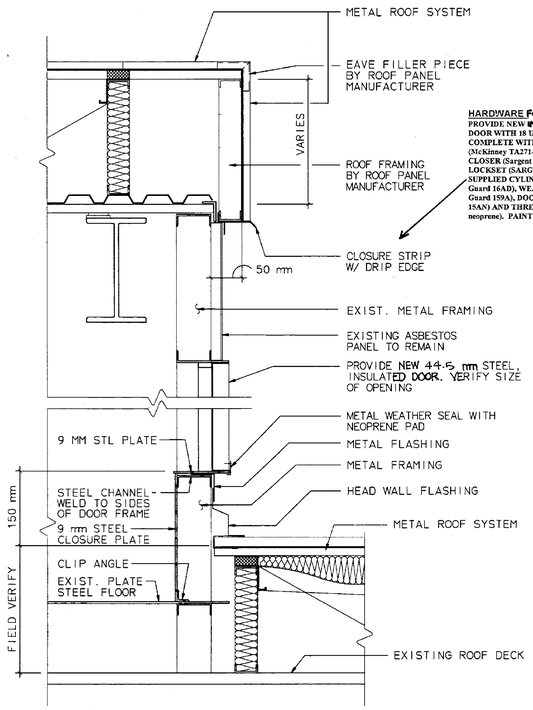

9 A2 SECTION THROUGH DOOR & PENTHOUSE EAST WALL

1:10

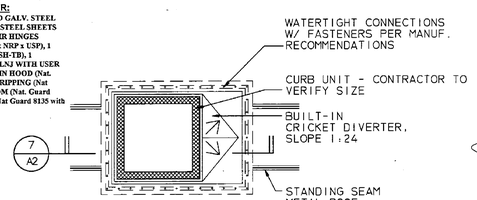

8 A.2 TYPICAL CURB UNIT DETAIL

1:20

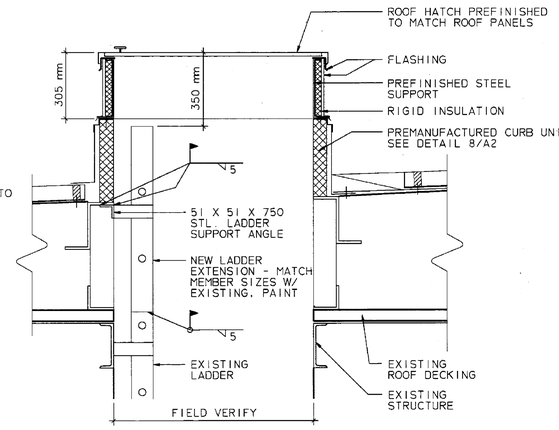

7 A2 ROOF HATCH DETAIL

1:10

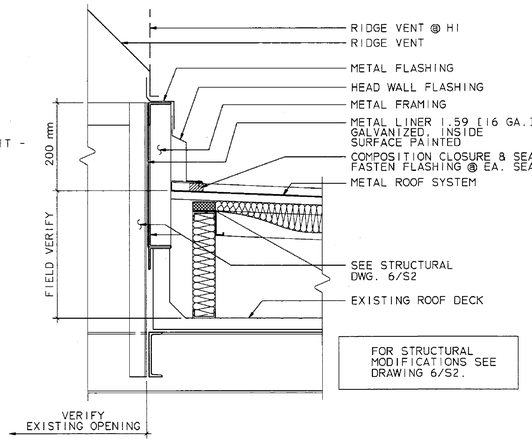

6 A2 SECTION THROUGH VENTILATOR @ ROOF H2 (ROOF H1 SIMILAR)

1:10

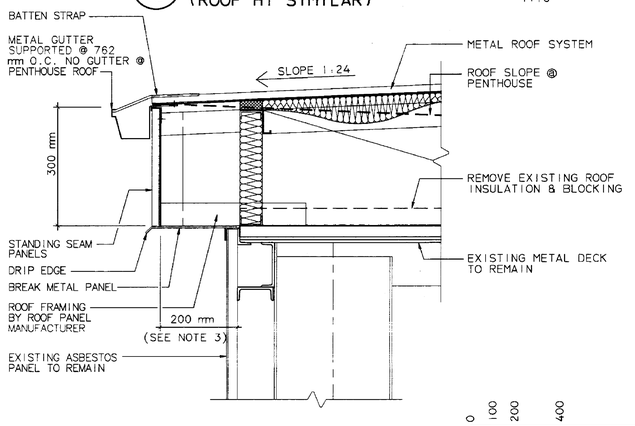

5 A2 ROOF EDGE AT HIGH BAY

1:10

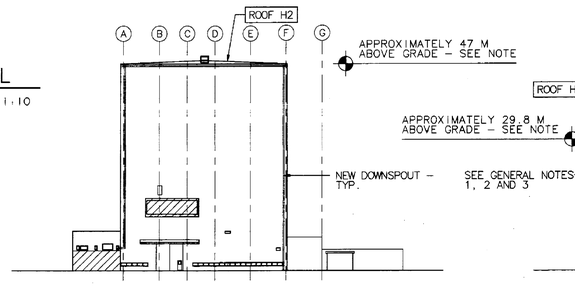

4 A2 WEST ELEVATION (ALLEY)

1:500

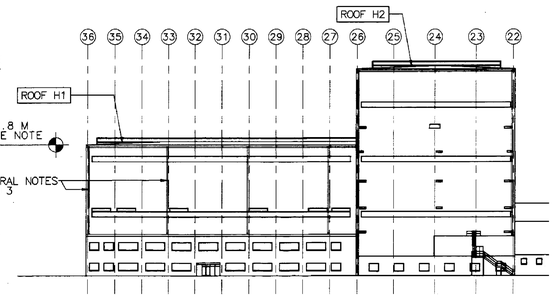

3 A2 NORTH ELEV

1:500

NOTE:
ROOF HEIGHTS INDICATED ARE APPROXIMATE AND ARE FURNISHED FOR INFORMATION PURPOSES ONLY. CONTRACTOR SHALL VERIFY ALL HEIGHTS PRIOR TO COMMENCING WORK.

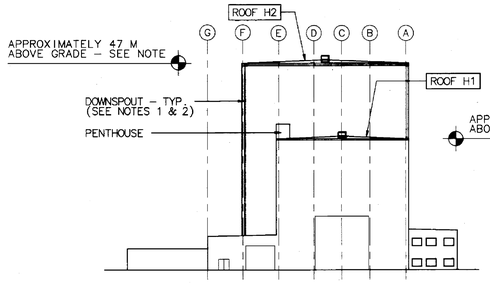

2 A2 EAST ELEVATION

1:500

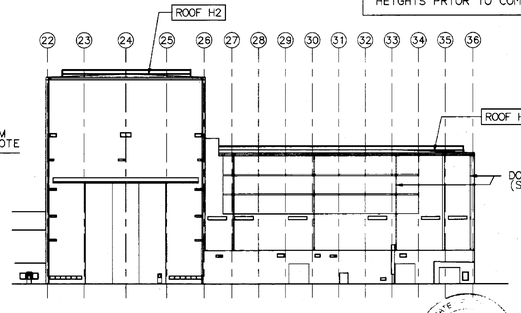

1 A2 SOUTH ELEVATION

1:500

GENERAL NOTES:

REFER TO DRAWING A-1 FOR GENERAL NOTES.

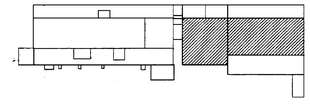

SHEET KEY PLAN

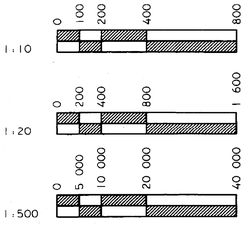

CONCURRENCE: R.A. 11/19/97
CONCURRENCE: / / / /
CONCURRENCE: / / / /
CONCURRENCE: MAINTENANCE 11/19/97
CONCURRENCE: USING OFFICE 11/19/97
CONCURRENCE: ENVIRONMENTAL HEALTH 11/20/97
CONCURRENCE: SAFETY OFFICE 11/24/97
CONCURRENCE: COMMUNICATIONS OFFICE 11/19/97

TELECOMMUNICATIONS EQUIPMENT AFFECTED BY THIS CONTRACT WORK IS NOT TO BE ALTERED OR REMOVED BY THE CONTRACTOR. CONTACT THE COTR IN THE EVENT OF A CONFLICT.

REF. NO.

A2

REV.	BY	DATE	REVISION	C.I. NO.	APPROVED

NASA MARSHALL SPACE FLIGHT CENTER
HUNTSVILLE, ALABAMA 35812

REPAIR HIGH BAY ROOF OF STRUCTURES & DYNAMICS LABORATORY (4619)

ELEVATIONS AND ROOF DETAILS

AE FIRM: TIPPETT CLEPPER ASSOCIATES

NASA AE CONTRACT NO. NASA 8-39884

SUBMITTED: RE. DATE: 12/21/94
APPROVAL RECOMMENDED: ABJ | DATE: 1/27/95
APPROVED - CHIEF ENGINEERING DIVISION: ABJ | DATE: 2/1/95

DESIGNED BLP
DRAWN DWW
CHECKED RSS
SCALE: VARIES

APPROVAL RECOMMENDED: CHIEF, ARCHITECTURAL BRANCH
DESIGN DATE: 2/1/95
SPEC. NO. M4067

DWG NO FAC-DF-4619-A2

FILE NAME: RPE-EL.VWF

MSFC MASTER BID DISK 11-18-2013

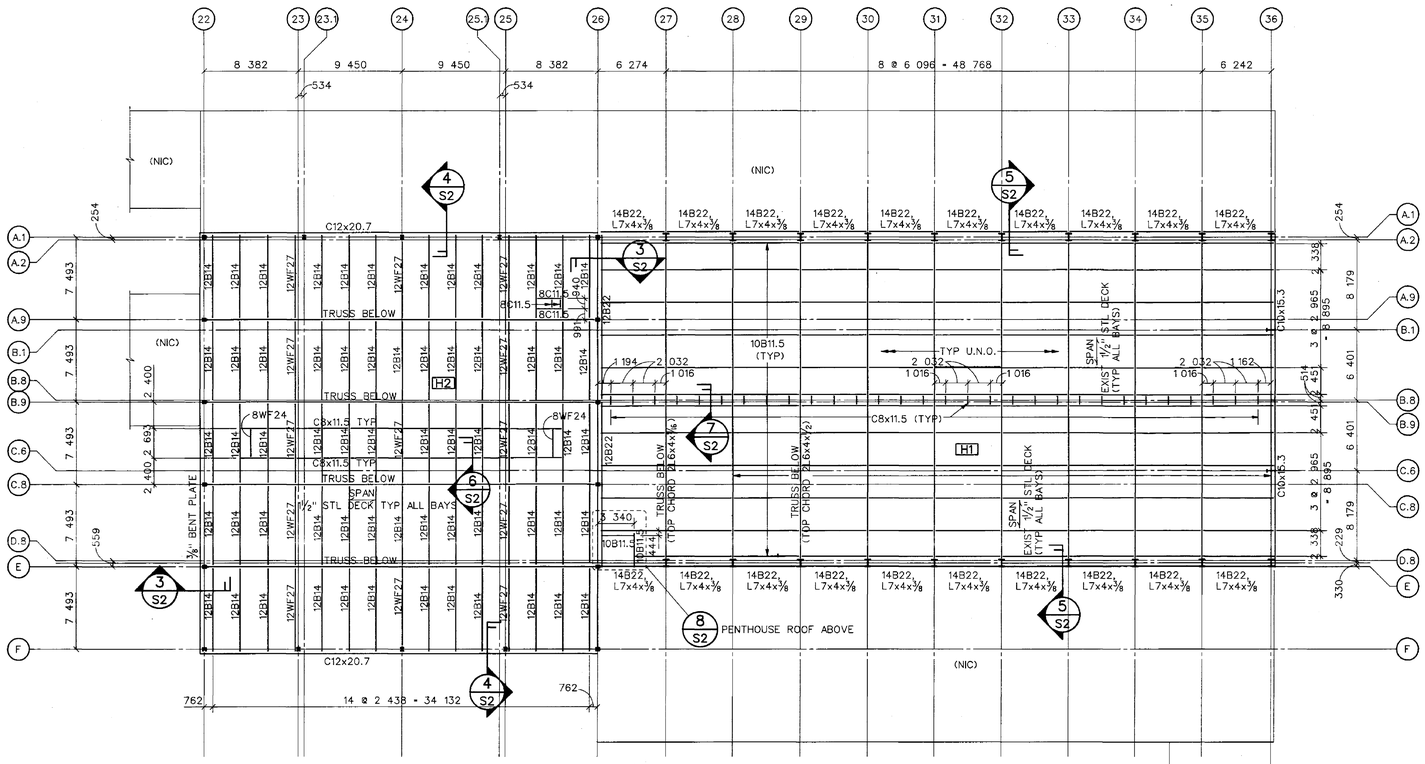

1 S1 EXIST EAST ROOF PLAN
1:200

LIST OF STRUCTURAL ABBREVIATIONS

A	
ADJ	ADJACENT
AFF	ABOVE FINISH FLOOR
ALT	ALTERNATE
APPROX	APPROXIMATELY
ARCH	ARCHITECTURAL, ARCHITECT
@	AT
B	
BLDG	BUILDING
BM	BEAM
BOT	BOTTOM
BTWN	BETWEEN
C	
CL	CENTERLINE
CLR	CLEAR
COL	COLUMN
CONN	CONNECTION
CONT	CONTINUOUS
COORD	COORDINATE
CTR	CENTER
D	
DB	DECK BEARING ELEVATION
DBL	DOUBLE
DET,DTL	DETAIL
DIA	DIAMETER
DIM	DIMENSION
DWG	DRAWING
E	
EL	ELEVATION
ELECT	ELECTRICAL
EQ	EQUAL
EQUIP	EQUIPMENT
EXIST	EXISTING
F	
FT, '	FEET
Fy	YIELD STRENGTH OF STEEL
G	
GA	GAGE
GALV	GALVANIZED
GOVT	GOVERNMENT
H	
HORIZ	HORIZONTAL
HT	HEIGHT
I	
IN, "	INCH
K	
K	KIP (1000 POUNDS)
kg	KILOGRAM
KSF	KIPS PER SQUARE FOOT
KSI	KIPS PER SQUARE INCH
L	
LB	POUND
LLH	LONG LEG HORIZONTAL
LLO	LONG LEG OUT
LLV	LONG LEG VERTICAL
M	
MATL	MATERIAL
MAX	MAXIMUM
MECH	MECHANICAL
MFR	MANUFACTURER
MIN	MINIMUM
MISC	MISCELLANEOUS
mm	MILLIMETER
MPa	MEGAPASCAL
MPH	MILES PER HOUR
N	
N/A	NOT APPLICABLE
NEG	NEGATIVE
NF	NEAR FACE
NIC	NOT IN CONTRACT
NO. •	NUMBER
N.S.	NEAR SIDE
NTS	NOT TO SCALE
O	
OC	ON CENTER (SPACING)
O.F.	OUTSIDE FACE
OPH	OPPOSITE HAND
OPNG	OPENING
P	
PL	PLATE
POS	POSITIVE
PSF	POUNDS PER SQUARE FOOT
PSI	POUNDS PER SQUARE INCH
R	
RAD	RADIUS
REQD	REQUIRED
S	
SCHED	SCHEDULE
S	SECOND
SH,SHT	SHEET
SIM	SIMILAR
SJI	STEEL JOIST INSTITUTE
SLH	SHORT LEG HORIZONTAL
SLV	SHORT LEG VERTICAL
SP,SPAC	SPACING
SPECS	SPECIFICATIONS
STD	STANDARD
STL	STEEL
STRUC	STRUCTURAL
SUPT	SUPPORT
T	
TYP	TYPICAL
T/	TOP OF
T/B	TOP OF BEAM
T/S	TOP OF STEEL
U	
U.N.O.	UNLESS NOTED OTHERWISE
V	
VERT	VERTICAL
W	
W/	WITH
W/O	WITHOUT

LEGEND OF SYMBOLS:

- XXX — BUILDING SEGMENT IDENTIFICATION
- NORTH ARROW
- X — INDICATES SECTION NUMBER
- SXX — SECTION REFERENCE; INDICATES SHEET NUMBER ON WHICH SECTION IS DRAWN

NEW MEMBERS ARE LABELED WITH METRIC DESIGNATIONS

EXISTING MEMBERS ARE LABELED WITH ENGLISH DESIGNATIONS

WHERE NEW AND EXISTING MEMBERS OCCUR TOGETHER, THE NEW MEMBERS WILL APPEAR WITH A THICKER LINE WEIGHT

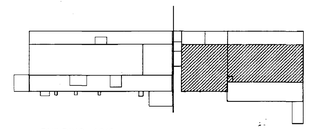

BUILDING 4619
KEY PLAN

GENERAL NOTES

GENERAL

1. NO WORK SHALL START IN THE FIELD BEFORE THE CONTRACTING OFFICER HAS REVIEWED AND APPROVED THE SHOP DRAWINGS AND ALL CORRECTIONS HAVE BEEN MADE TO THEM.
2. THE CONTRACTOR SHALL BE RESPONSIBLE FOR BRACING AND SHORING OF ALL WORK DURING CONSTRUCTION.
3. THE EXISTING STRUCTURE AS SHOWN ON THESE DRAWINGS IS NOT INTENDED TO REPRESENT THE COMPLETE IN PLACE STRUCTURE. THE CONTRACTOR SHALL FIELD VERIFY ALL DIMENSIONS, MEMBER SIZES AND CONDITIONS PERTAINING TO THE EXISTING STRUCTURE PRIOR TO COMMENCING WORK. SUBMIT VARIATIONS TO THE CONTRACTING OFFICER FOR REVIEW.

DESIGN LOAD DATA

1. THE GOVERNING BUILDING CODE SHALL BE THE UNIFORM BUILDING CODE, WITH THE FOLLOWING PARAMETERS:
   DESIGN LIVE LOADS:
   ROOF----------960 Pa
2. WIND LOADS SHALL BE DESIGNED ACCORDING TO ASCE-7-88, "MINIMUM DESIGN LOADS FOR BUILDINGS AND OTHER STRUCTURES."
   WIND LOADS:
   BASIC WIND VELOCITY----------33.5 m/s
   (50-YEAR MEAN RECURRENCE INTERVAL)
3. SEISMIC DESIGN SHALL BE DESIGNED ACCORDING TO THE UNIFORM BUILDING CODE
   SEISMIC:----------ZONE 1

STRUCTURAL STEEL & TRUSSES

1. ALL STRUCTURAL STEEL, WHERE DESIGNS ARE SHOWN, SHALL BE ASTM A36M. WHERE DESIGNS ARE BY THE CONTRACTOR'S ENGINEER, STEEL 3.2mm OR MORE IN THICKNESS SHALL CONFORM TO ASTM A36M, ASTM A529M, ASTM A572M, OR ASTM A588M. UNCOATED STEEL LESS THAN 3.2mm IN THICKNESS SHALL CONFORM TO ASTM A570M, ASTM A606, OR ASTM A607.
2. STRUCTURAL STEEL CONNECTIONS SHOWN ON THESE DRAWINGS SHALL BE AS DETAILED. CONNECTIONS NOT COMPLETELY DETAILED ON THESE DRAWINGS SHALL BE DESIGNED & DETAILED UNDER THE DIRECT SUPERVISION OF A REGISTERED PROFESSIONAL ENGINEER-EMPLOYED BY THE CONTRACTOR TO CONFORM WITH THE AISC MANUAL OF STEEL CONSTRUCTION AND THE AISI COLD-FORMED STEEL DESIGN MANUAL. HIGH-STRENGTH BOLTING SHALL CONFORM TO ASTM A325M OR ASTM A490M. ALL CONNECTION MATERIAL SHALL BE INCLUDED WITH THE STRUCTURAL STEEL SHOWN AND SHALL BE SUPPLIED BY THE CONTRACTOR.
3. PRE-ENGINEERED ANALYSIS AND DESIGN BY THE CONTRACTOR'S ENGINEER SHALL INCLUDE THE FINAL DESIGN AND DETAILS OF CONSTRUCTION FOR EACH SUPERSTRUCTURE FOR ALL LOADING CONDITIONS.
4. ALL WELDING SHALL BE IN ACCORDANCE WITH THE AWS D1.1 STRUCTURAL WELDING CODE, AND BE PERFORMED BY CERTIFIED WELDERS.
5. ALL FILLET WELDS SHALL BE VISUALLY INSPECTED FOR COMPLIANCE WITH AWS D1.1 BY A QUALIFIED STRUCTURAL ENGINEER TO BE SELECTED BY THE CONTRACTING OFFICER.
6. ALL COLD-FORMED METAL FRAMING SHALL CONFORM TO THE REQUIREMENTS OF THE COLD-FORMED STEEL DESIGN MANUAL OF THE AMERICAN IRON AND STEEL INSTITUTE. THE CONTRACTOR SHALL SUBMIT SHOP DRAWINGS SHOWING ALL MEMBER GAGES, SPACINGS, SIZES, AND CONNECTION DETAILS FOR GOVERNMENT REVIEW AND APPROVAL PRIOR TO FABRICATION.

RETRO-FIT METAL ROOF SYSTEMS

1. THE RETRO-FIT METAL ROOFING SYSTEM SHALL CONSIST OF ALL MATERIALS NECESSARY TO INSTALL A SLOPED STANDING SEAM METAL ROOF OVER AN EXISTING ROOF. NECESSARY ITEMS INCLUDE, BUT ARE NOT LIMITED TO STANDING SEAM METAL ROOFING PANELS, LIGHT GAUGE STEEL PURLINS AND/OR SUBPURLINS, LIGHT GAUGE STEEL COLUMNS (POSTS), BEARING PLATES OR CHANNELS, CONNECTIONS TO THE EXISTING STRUCTURE AND ALL NECESSARY CONNECTIONS BETWEEN MEMBERS. THE ENTIRE ROOFING SYSTEM SHALL BE FROM A SINGLE ROOFING MANUFACTURER AND THAT SUPPLIER SHALL SUBMIT CALCULATIONS, FABRICATION DRAWINGS AND ERECTION DRAWINGS STAMPED BY A REGISTERED PROFESSIONAL ENGINEER.
2. PRIOR TO FABRICATION, THE RETRO-FIT METAL ROOF MANUFACTURER SHALL PROVIDE THE FOLLOWING TO THE GOVERNMENT FOR REVIEW AND APPROVAL:
   CERTIFICATION THAT THE RETRO-FIT METAL ROOFING SYSTEM PROPOSED FOR THIS PROJECT WILL MEET ALL REQUIREMENTS OF THE U.L. CLASS 90 UPLIFT RATING.
   RETRO-FIT METAL ROOF CALCULATIONS, FABRICATION AND ERECTION DRAWINGS (INCLUDING CONNECTIONS TO EXISTING AND CONNECTIONS FOR NEW WORK) SEALED BY A REGISTERED ENGINEER.
3. RETRO-FIT METAL ROOF MANUFACTURER SHALL BE RESPONSIBLE FOR ALL FRAMING ABOVE, THE EXISTING ROOF, INCLUDING ALL ATTACHMENT TO THE EXISTING ROOF STRUCTURE.

NOTE:

THE GROSS UNIT WEIGHT OF THE NEW ROOFING SYSTEM SHALL NOT EXCEED 450 Pa.

THE NEW FRAMING SYSTEM TO SUPPORT THE NEW METAL ROOF SHALL BE FRAMED SO AS TO LOAD THE EXISTING STRUCTURE IN A UNIFORM AND SYMMETRIC MANNER.

IN NO CASE SHALL THE TRIBUTARY AREA OF A BEAM AFTER THE NEW ROOF FRAMING IS IN PLACE EXCEED THE TRIBUTARY AREA OF THAT BEAM AS ORIGINALLY BUILT. (THE TRIBUTARY AREA OF A BEAM IS DEFINED AS THE AREA OBTAINED BY MULTIPLYING THE SPAN OF THAT MEMBER BY THE SUM OF HALF OF THE DISTANCE TO THE NEXT MEMBER TO EITHER SIDE OF THE MEMBER IN QUESTION.

A NEW SPREADER BEAM (TO BE SIZED BY CONTRACTOR) SHALL RUN PARALLEL TO AND ABOVE EACH EXISTING ROOF BEAM AND SHALL BE ATTACHED TO THE ROOF DECK. THE NEW POSTS TO SUPPORT THE LIGHT GAUGE ROOF SYSTEM SHALL BE POSITIVELY ATTACHED TO THE SPREADER BEAM. MAXIMUM SPACING FOR POSTS ALONG THE BEAM LENGTH SHALL BE 1 600mm. (SEE 9/S2 AND 10/S2)

THE MAXIMUM ALLOWABLE TRIBUTARY AREA PER POST SHALL BE 4 600 000mm²
NO BEAM SHALL CARRY MORE THAN 4 OF THESE POINT LOADS.

IN NO CASE SHALL CONCENTRATED LOADS BE ALLOWED ON THE EXISTING ROOF DECK AWAY FROM THE NEW SPREADER BEAMS INSTALLED ABOVE THE EXISTING ROOF BEAMS.

THE NEW RETRO-FIT ROOF SYSTEM SHALL BE DESIGNED FOR THE ALLOWABLE UPLIFT PRESSURES AS SHOWN AT 11 / S2.

GEORGIA REGISTERED — By ASRC — JACK D. LYNCH — ENGINEER

0 2 000 4 000 8 000 16 000
1:200

CONCURRENCE: R A L 11/9/95
CONCURRENCE: / / / /
CONCURRENCE: / / / /
CONCURRENCE: MAINTENANCE
CONCURRENCE: USING OFFICE 11/9/95
CONCURRENCE: ENVIRONMENTAL HEALTH 11/10/95
CONCURRENCE: SAFETY OFFICE 11/14/95
CONCURRENCE: COMMUNICATIONS OFFICE 11/14/95
TELECOMMUNICATIONS EQUIPMENT AFFECTED BY THIS CONTRACT WORK IS NOT TO BE ALTERED OR REMOVED BY THE CONTRACTOR. CONTACT THE COTR IN THE EVENT OF A CONFLICT.
REF. NO.
S1

REV.	BY	DATE	REVISION	C.I. NO.	APPROVED

NASA MARSHALL SPACE FLIGHT CENTER
HUNTSVILLE, ALABAMA 35812

REPAIR HIGH BAY ROOF OF
STRUCTURES & DYNAMICS LABORATORY (4619)

EAST ROOF PLAN

AE FIRM: TIPPETT CLEPPER ASSOCIATES		NASA AE CONTRACT NO. NASA 8-39883
SUBMITTED: [signature]	APPROVAL RECOMMENDED: W. L. Reynolds	ACCEPTED CHIEF ENGINEERING DIVISION: [signature]
REV: DATE: 12/21/94	ABR: DATE: 1-3-95	4041 DATE: 2/1/95
DESIGNED JF	APPROVAL RECOMMENDED: LWG	DWG NO
DRAWN JF	CHIEF, CIVIL/STRUCTURAL BRANCH	FAC-DF-4619-S1
CHECKED JL	DESIGN DATE: 11/9/95	
SCALE: 1:200	SPEC NO. M4067	

MSFC MASTER BID DISK 11-18-2013

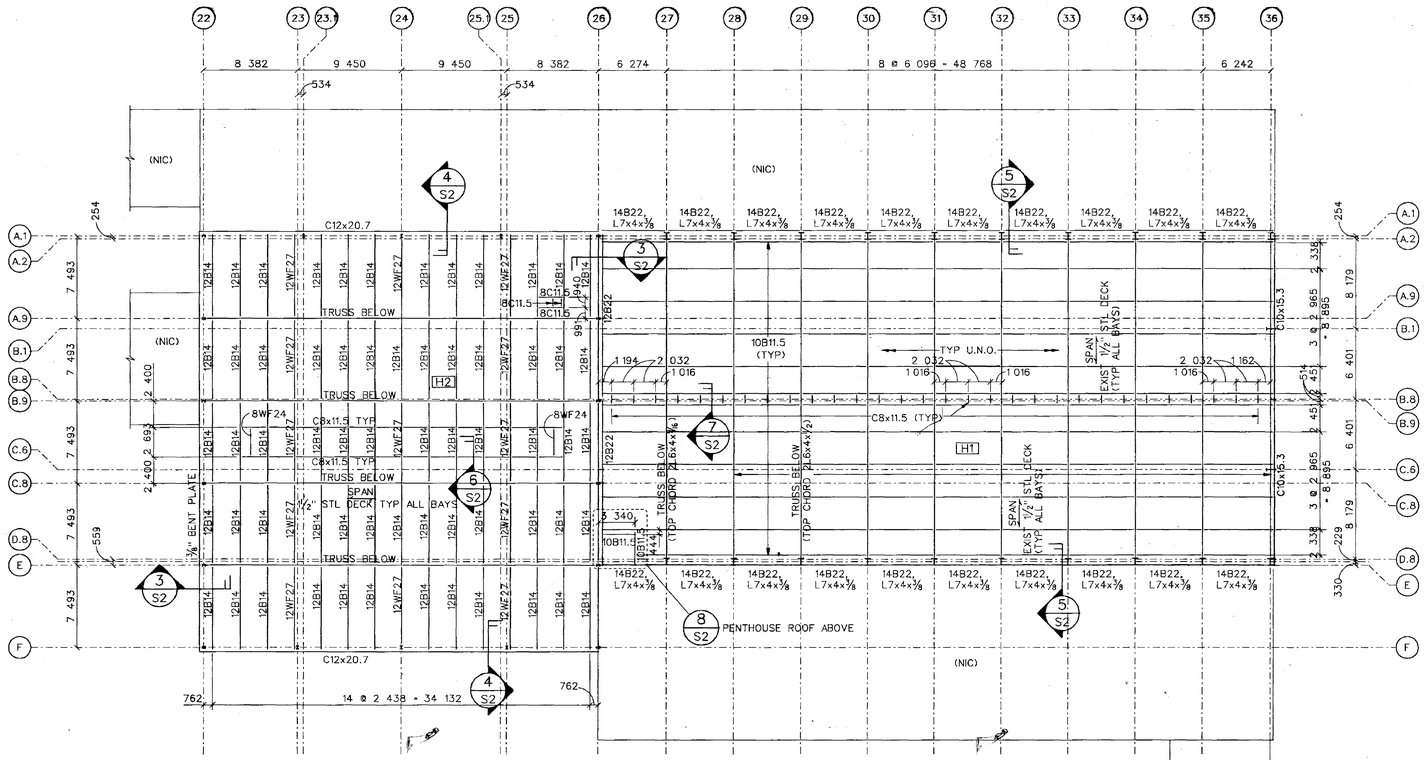

LIST OF STRUCTURAL ABBREVIATIONS

A	
ADJ	ADJACENT
AFF	ABOVE FINISH FLOOR
ALT	ALTERNATE
APPROX	APPROXIMATELY
ARCH	ARCHITECTURAL, ARCHITECT
@	AT
B	
BLDG	BUILDING
BM	BEAM
BOT	BOTTOM
BTWN	BETWEEN
C	
CL	CENTERLINE
CLR	CLEAR
COL	COLUMN
CONN	CONNECTION
CONT	CONTINUOUS
COORD	COORDINATE
CTR	CENTER
D	
DB	DECK BEARING ELEVATION
DBL	DOUBLE
DET,DTL	DETAIL
DIA	DIAMETER
DIM	DIMENSION
DWG	DRAWING
E	
EL	ELEVATION
ELECT	ELECTRICAL
EQ	EQUAL
EQUIP	EQUIPMENT
EXIST	EXISTING
F	
FT, '	FEET
Fy	YIELD STRENGTH OF STEEL
G	
GA	GAGE
GALV	GALVANIZED
GOVT	GOVERNMENT
H	
HORIZ	HORIZONTAL
HT	HEIGHT
I	
IN, "	INCH
K	
K	KIP (1000 POUNDS)
kg	KILOGRAM
KSF	KIPS PER SQUARE FOOT
KSI	KIPS PER SQUARE INCH
L	
LB	POUND
LLH	LONG LEG HORIZONTAL
LLO	LONG LEG OUT
LLV	LONG LEG VERTICAL
M	
MATL	MATERIAL
MAX	MAXIMUM
MECH	MECHANICAL
MFR	MANUFACTURER
MIN	MINIMUM
MISC	MISCELLANEOUS
mm	MILLIMETER
MPa	MEGAPASCAL
MPH	MILES PER HOUR
N	
N/A	NOT APPLICABLE
NEG	NEGATIVE
NF	NEAR FACE
NIC	NOT IN CONTRACT
NO, #	NUMBER
N.S.	NEAR SIDE
NTS	NOT TO SCALE
O	
OC	ON CENTER (SPACING)
O.F.	OUTSIDE FACE
OPH	OPPOSITE HAND
OPNG	OPENING
P	
PL	PLATE
POS	POSITIVE
PSF	POUNDS PER SQUARE FOOT
PSI	POUNDS PER SQUARE INCH
R	
RAD	RADIUS
REQD	REQUIRED
S	
SCHED	SCHEDULE
S	SECOND
SH,SHT	SHEET
SIM	SIMILAR
SJI	STEEL JOIST INSTITUTE
SLH	SHORT LEG HORIZONTAL
SLV	SHORT LEG VERTICAL
SP,SPAC	SPACING
SPECS	SPECIFICATIONS
STD	STANDARD
STL	STEEL
STRUC	STRUCTURAL
SUPT	SUPPORT
T	
TYP	TYPICAL
T/	TOP OF
T/B	TOP OF BEAM
T/S	TOP OF STEEL
U	
U.N.O.	UNLESS NOTED OTHERWISE
V	
VERT	VERTICAL
W	
W/	WITH
W/O	WITHOUT

LEGEND OF SYMBOLS:

- XXX — BUILDING SEGMENT IDENTIFICATION
- ⊕ — NORTH ARROW
- X / SXX — INDICATES SECTION NUMBER; SECTION REFERENCE; INDICATES SHEET NUMBER ON WHICH SECTION IS DRAWN

NEW MEMBERS ARE LABELED WITH METRIC DESIGNATIONS

EXISTING MEMBERS ARE LABELED WITH ENGLISH DESIGNATIONS

WHERE NEW AND EXISTING MEMBERS OCCUR TOGETHER, THE NEW MEMBERS WILL APPEAR WITH A THICKER LINE WEIGHT

1 / S1 EXIST EAST ROOF PLAN

1:200

GENERAL NOTES

GENERAL

1. NO WORK SHALL START IN THE FIELD BEFORE THE CONTRACTING OFFICER HAS REVIEWED AND APPROVED THE SHOP DRAWINGS AND ALL CORRECTIONS HAVE BEEN MADE TO THEM.
2. THE CONTRACTOR SHALL BE RESPONSIBLE FOR BRACING AND SHORING OF ALL WORK DURING CONSTRUCTION.
3. THE EXISTING STRUCTURE AS SHOWN ON THESE DRAWINGS IS NOT INTENDED TO REPRESENT THE COMPLETE IN PLACE STRUCTURE. THE CONTRACTOR SHALL FIELD VERIFY ALL DIMENSIONS, MEMBER SIZES AND CONDITIONS PERTAINING TO THE EXISTING STRUCTURE PRIOR TO COMMENCING WORK. SUBMIT VARIATIONS TO THE CONTRACTING OFFICER FOR REVIEW.
4. THE EXISTING BUILT-UP ROOF HAS 2 TO 3 INCHES OF CELLULOSE INSULATION.

DESIGN LOAD DATA

1. THE GOVERNING BUILDING CODE SHALL BE THE STANDARD BUILDING CODE, WITH THE FOLLOWING PARAMETERS:
   DESIGN LIVE LOADS:
   ROOF ---------- 960 Pa
2. WIND LOADS SHALL BE DESIGNED ACCORDING TO ASCE-7-88, "MINIMUM DESIGN LOADS FOR BUILDINGS AND OTHER STRUCTURES."
   WIND LOADS:
   BASIC WIND VELOCITY ---------- 33.5 m/s
   (50-YEAR MEAN RECURRENCE INTERVAL)
3. SEISMIC DESIGN SHALL BE DESIGNED ACCORDING TO THE STANDARD BUILDING CODE
   SEISMIC: ---------- ZONE 1

STRUCTURAL STEEL & TRUSSES

1. ALL STRUCTURAL STEEL, WHERE DESIGNS ARE SHOWN, SHALL BE ASTM A36M.
2. STRUCTURAL STEEL CONNECTIONS SHOWN ON THESE DRAWINGS SHALL BE AS DETAILED. CONNECTIONS NOT COMPLETELY DETAILED ON THESE DRAWINGS SHALL BE DESIGNED & DETAILED UNDER THE DIRECT SUPERVISION OF A REGISTERED PROFESSIONAL ENGINEER EMPLOYED BY THE CONTRACTOR TO CONFORM WITH THE AISC MANUAL OF STEEL CONSTRUCTION AND THE AISI COLD-FORMED STEEL DESIGN MANUAL. HIGH-STRENGTH BOLTING SHALL CONFORM TO ASTM A325M OR ASTM A490M. ALL CONNECTION MATERIAL SHALL BE INCLUDED WITH THE STRUCTURAL STEEL SHOWN AND SHALL BE SUPPLIED BY THE CONTRACTOR.
3. ALL WELDING SHALL BE IN ACCORDANCE WITH THE AWS D1.1 STRUCTURAL WELDING CODE, AND BE PERFORMED BY CERTIFIED WELDERS.
4. ALL COLD-FORMED METAL FRAMING SHALL CONFORM TO THE REQUIREMENTS OF THE COLD-FORMED STEEL DESIGN MANUAL OF THE AMERICAN IRON AND STEEL INSTITUTE. THE CONTRACTOR SHALL SUBMIT SHOP DRAWINGS SHOWING ALL MEMBER CAGES, SPACINGS, SIZES, AND CONNECTION DETAILS FOR GOVERNMENT REVIEW AND APPROVAL PRIOR TO FABRICATION.

RETRO-FIT METAL ROOF SYSTEMS

1. THE RETRO-FIT METAL ROOFING SYSTEM SHALL CONSIST OF ALL MATERIALS NECESSARY TO INSTALL A SLOPED STANDING SEAM METAL ROOF OVER AN EXISTING ROOF. NECESSARY ITEMS INCLUDE, BUT ARE NOT LIMITED TO STANDING SEAM METAL ROOFING PANELS, LIGHT GAUGE STEEL PURLINS AND/OR SUBPURLINS, LIGHT GAUGE STEEL COLUMNS (POSTS), BEARING PLATES OR CHANNELS, CONNECTIONS TO THE EXISTING STRUCTURE AND ALL NECESSARY CONNECTIONS BETWEEN MEMBERS. THE ENTIRE ROOFING SYSTEM SHALL BE FROM A SINGLE ROOFING MANUFACTURER AND THAT SUPPLIER SHALL SUBMIT CALCULATIONS, FABRICATION DRAWINGS AND ERECTION DRAWINGS STAMPED BY A REGISTERED PROFESSIONAL ENGINEER.
2. RETRO-FIT METAL ROOF MANUFACTURER SHALL BE RESPONSIBLE FOR ALL FRAMING ABOVE, THE EXISTING ROOF, INCLUDING ALL ATTACHMENT TO THE EXISTING ROOF STRUCTURE.

REVISED NOTES

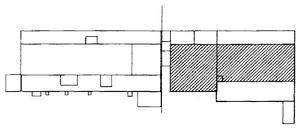

BUILDING 4619

KEY PLAN

RECORD REGISTERED No. 6580 PROFESSIONAL JACK D. LYNCH

1:200

CONCURRENCE		
RALPH ALLEN	1/9/95	
	/ / /	
	/ / /	
DAN FREEMAN, MAINTENANCE	1/11/95	
V. STRICKLAND, USING OFFICE	1/9/95	
FELICIA PHILLIPS, ENVIRONMENTAL HEALTH	1/10/95	
DENNIS DAVIS, SAFETY OFFICE	1/24/95	
MUSE MANN, COMMUNICATIONS OFFICE	1/12/95	

TELECOMMUNICATIONS EQUIPMENT AFFECTED BY THIS CONTRACT WORK IS NOT TO BE ALTERED OR REMOVED BY THE CONTRACTOR. CONTACT THE COTR IN THE EVENT OF A CONFLICT.

REV.	BY	DATE	REVISION	C.I. NO.	APPROVED
⚠	LWG	8-7-95	LEAVE B.U.R. IN PLACE	AM. 1	LWG

NASA MARSHALL SPACE FLIGHT CENTER
HUNTSVILLE, ALABAMA 35812

REPAIR HIGH BAY ROOF OF
STRUCTURES & DYNAMICS LABORATORY (4619)

EAST ROOF PLAN

A/E FIRM: TIPPETT CLEPPER ASSOCIATES		NASA AE CONTRACT NO. NASA 8-39883
SUBMITTED: JACK LYNCH	APPROVAL RECOMMENDED: M. L. REYNOLDS	ACCEPTED: CHIEF ENGINEERING DIVISION P. W. ALLEN
REV: DATE: 12/21/94	ADD1 DATE: 1-9-95	ADD2 DATE: 2-1-95
DESIGNED UF / DRAWN UF / CHECKED JL / SCALE: 1:200	APPROVAL RECOMMENDED: LWG R. TURNER, CHIEF, CIVIL/STRUCTURAL BRANCH; DESIGN DATE: 1-9-95; SPEC NO. M4067	DWG NO FAC-DF-4619-S1
REF. NO.	S1	

MSFC MASTER BID DISK 11-18-2013

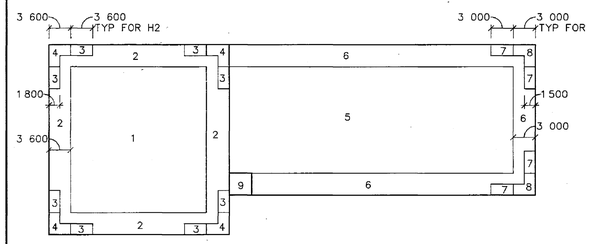

WIND PRESSURE TABLE (Pa)		
ZONES	ROOF UPLIFT PRESSURES	
	A≤1.0m²	A≥46.0m²
1	-2 440	-1 350
2	-2 980	-2 440
3	-4 600	-2 440
4	-5 680	-2 440
5	-2 140	-1 200
6	-2 620	-2 140
7	-4 050	-2 140
8	-5 000	-2 140
9	-4 630	-2 000

NOTES:

1) POSITIVE AND NEGATIVE PRESSURES SIGNIFY PRESSURES ACTING TOWARD AND AWAY FROM PERPINDICULAR SURFACES, RESPECTIVELY

2) LINEAR INTERPOLATION MAY BE USED FOR INTERMEDIATE VALUES OF TRIBUTARY AREA.

11 S2 ROOF PLAN WIND UPLIFT DIAGRAM

NO SCALE

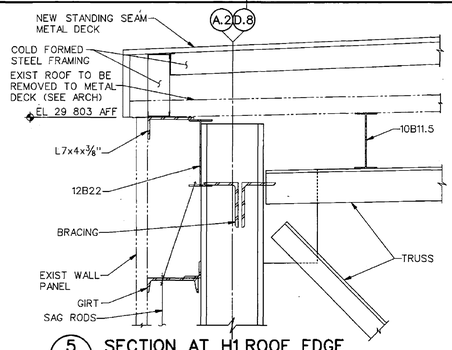

5 S2 SECTION AT H1 ROOF EDGE

1:10

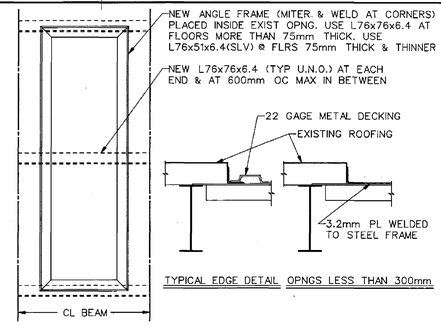

2 S2 CLOSURE FOR EXISTING ROOF OPENING

NO SCALE

COORD W/ MECH, LOCATE IN FIELD

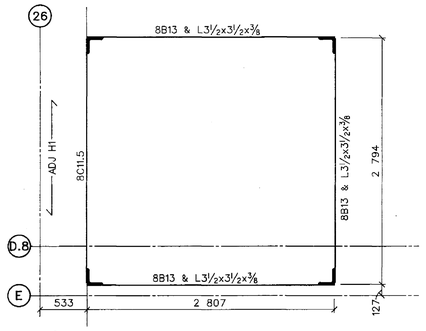

8 S2 PENTHOUSE ROOF PLAN

1:25

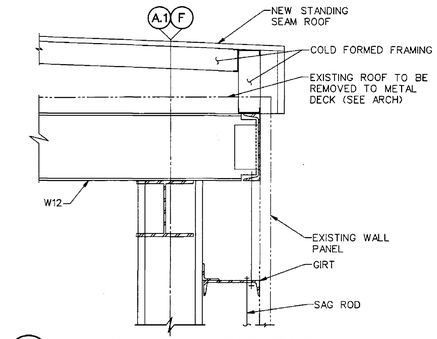

4 S2 SECTION AT H2 ROOF EDGE

1:10

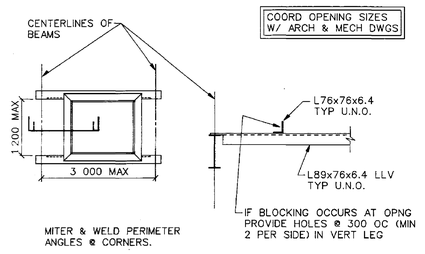

1 S2 NEW ROOF OPENING DETAIL

NO SCALE

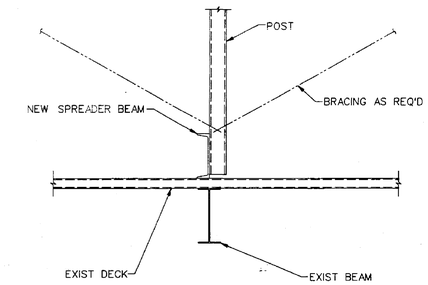

10 S2 SECTION PERPINDICULAR TO BEAMS

1:10

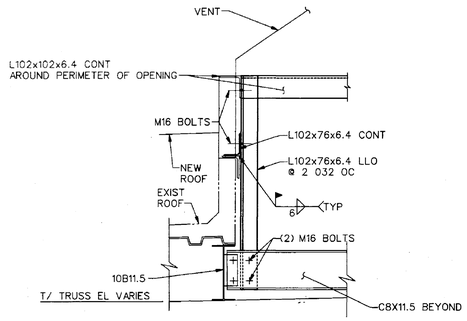

7 S2 SECTION AT H1 ROOF VENT

1:10

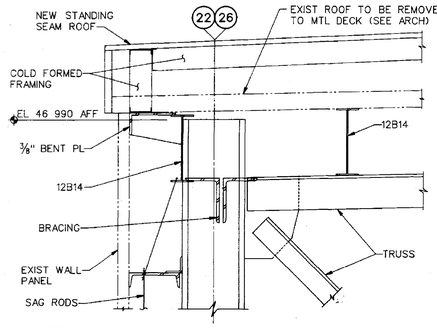

3 S2 SECTION AT H2 ROOF EDGE

1:10

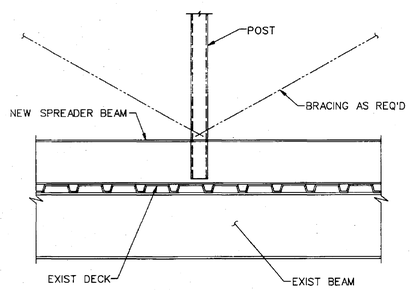

9 S2 SECTION PARALLEL TO BEAMS

1:10

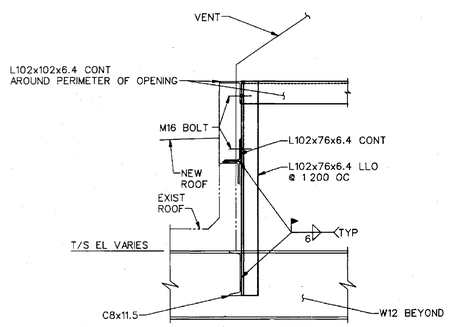

6 S2 SECTION AT H2 ROOF VENT

1:10

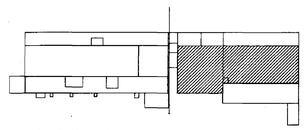

KEY PLAN

GEORGIA REGISTERED No. 6580 PROFESSIONAL ENGINEER JACK D. LYNCH

0 250 500 1 000 2 000

1:25

0 100 200 400 800

1:10

CONCURRENCE: K.A.L 11/9/95
CONCURRENCE: / / /
CONCURRENCE: / / /
CONCURRENCE: K.K. Freeman 11/11/95 MAINTENANCE
CONCURRENCE: 11/7/95 FIRE OFFICE
CONCURRENCE: / / /
ENVIRONMENTAL HEALTH
CONCURRENCE: 11/29/95 SAFETY OFFICE
CONCURRENCE: 11/27/95 COMMUNICATIONS OFFICE

TELECOMMUNICATIONS EQUIPMENT AFFECTED BY THIS CONTRACT WORK IS NOT TO BE ALTERED OR REMOVED BY THE CONTRACTOR. CONTACT THE COTR IN THE EVENT OF A CONFLICT.

REF. NO.

S2

REV.	BY	DATE	REVISION	C.I. NO.	APPROVED

NASA MARSHALL SPACE FLIGHT CENTER HUNTSVILLE, ALABAMA 35812

REPAIR HIGH BAY ROOF OF STRUCTURES & DYNAMICS LABORATORY (4619)

SECTIONS, DETAILS

AE FIRM: TIPPETT CLEPPER ASSOCIATES — NASA AE CONTRACT NO. NASA 8-39883

SUBMITTED: [signature] RE: DATE: 12/21/94
APPROVAL RECOMMENDED: M. C. Reynolds ABS1 DATE: 1-9-95
ACCEPTED: CHIEF ENGINEERING DIVISION [signature] ABS1 DATE: 2/1/95
DESIGNED JF
DRAWN JF
CHECKED JL
SCALE: AS NOTED
APPROVED RECOMMENDED: [signature] LWG
CHIEF, CIVIL/STRUCTURAL BRANCH
DESIGN DATE: 1/9/95
SPEC. NO. M4067

DWG NO FAC-DF-4619-S2

MSFC MASTER BID DISK 11-18-2013

ROOF H1 LOAD LIMITS

MAX. ALLOWABLE LOADS IN KIPS FOR MIN. 4.8' SPACING

UPLIFT ALLOWABLE, IN KIPS

-8.45 -8.45 -8.45 -8.45 -8.45 -8.45

4.8' 4.8' 4.8' 4.8' 4.8'

TOTAL LOAD FROM NEW ROOF INCLUDING LIVE LOAD

8.88 8.88 8.88 8.88 8.88 8.88 8.88 8.88

4.8' 4.8' 4.8' 4.8' 4.8' 4.8' 4.8'

28.8'

ROOF SECTION H1

SCALE: 1/4" = 1'-0"

MAX. ALLOWABLE LOADS IN KIPS FOR 5.8' MIN. SPACING

UPLIFT ALLOWABLE, IN KIPS

-8.59 -8.59 -8.59 -8.59 -8.59 -8.59

5.8' 5.8' 5.8' 5.8' 5.8'

TOTAL LOAD FROM NEW ROOF INCLUDING LIVE LOAD

1.89 1.89 1.89 1.89 1.89 1.89 1.89 1.89

5.8' 5.8' 5.8' 5.8' 5.8' 5.8' 5.8'

28.8'

ROOF SECTION H1

SCALE: 1/4" = 1'-0"

⚠ OMITTED DETAILS 9 & 10 & 11. ADDED LOAD DIAGRAMS.

ROOF H2 LOAD LIMITS

MAX. ALLOWABLE LOADS IN KIPS FOR 4.8' MIN. SPACING

UPLIFT ALLOWABLE, IN KIPS

-8.35 -8.35 -8.35 -8.35 -8.35 -8.35 -8.35

4.8' 4.8' 4.8' 4.8' 4.8' 4.8' 4.8'

TOTAL LOAD FROM NEW ROOF INCLUDING LIVE LOAD

8.68 8.68 8.68 8.68 8.68 8.68 8.68 8.68

4.8' 4.8' 4.8' 4.8' 4.8' 4.8' 4.8'

24.68'

ROOF SECTION H2

SCALE: 1/4" = 1'-0"

MAX. ALLOWABLE LOADS IN KIPS FOR 4.92' MIN. SPACING

UPLIFT ALLOWABLE, IN KIPS

-8.59 -8.59 -8.59 -8.59 -8.59 -8.59

4.92' 4.92' 4.92' 4.92' 4.92' 4.92'

TOTAL LOAD FROM NEW ROOF INCLUDING LIVE LOAD

1.89 1.89 1.89 1.89 1.89 1.89 1.89 1.89

4.92' 4.92' 4.92' 4.92' 4.92' 4.92' 4.92'

24.68'

ROOF SECTION H2

SCALE: 1/4" = 1'-0"

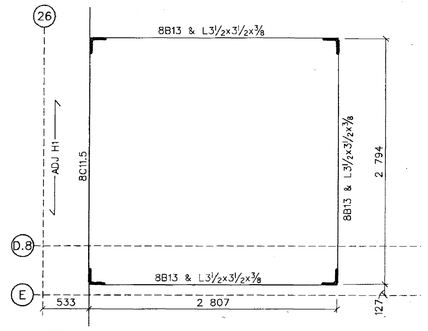

8 S2 PENTHOUSE ROOF PLAN
1:25

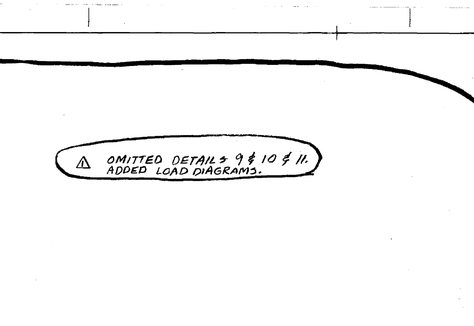

7 S2 SECTION AT H1 ROOF VENT
1:10

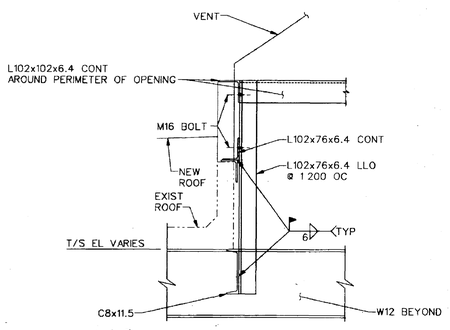

6 S2 SECTION AT H2 ROOF VENT
1:10

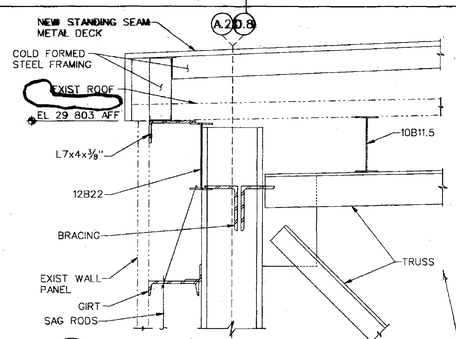

5 S2 SECTION AT H1 ROOF EDGE
1:10

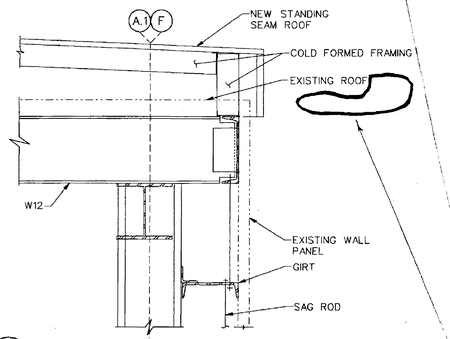

4 S2 SECTION AT H2 ROOF EDGE
1:10

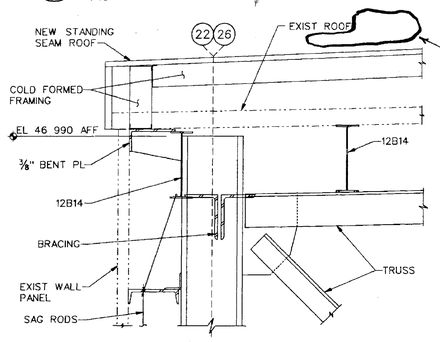

3 S2 SECTION AT H2 ROOF EDGE
1:10

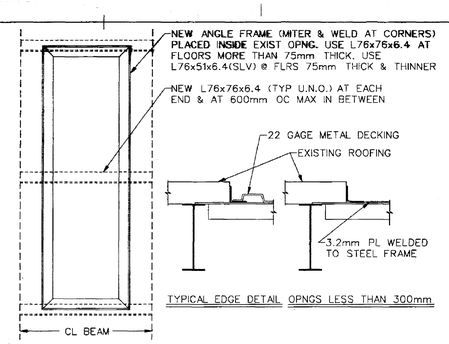

TYPICAL EDGE DETAIL OPNGS LESS THAN 300mm

2 S2 CLOSURE FOR EXISTING ROOF OPENING
NO SCALE — COORD W/ MECH, LOCATE IN FIELD

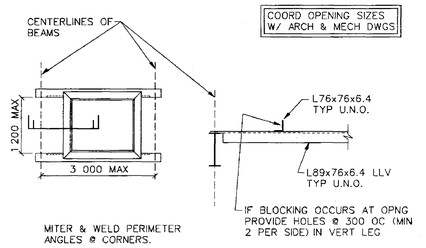

1 S2 NEW ROOF OPENING DETAIL
NO SCALE

⚠ REVISED NOTES IN DETAILS 3, 4, & 5

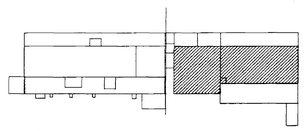

BUILDING 4619
KEY PLAN

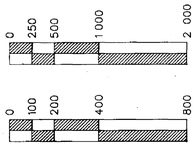

CONCURRENCE: RALPH ALLEN / 1/9/95
CONCURRENCE: / / /
CONCURRENCE: / / /
CONCURRENCE: DAN FREEMAN / 1/11/95 MAINTENANCE
CONCURRENCE: V. STRICKLAND / 1/9/95 USING OFFICE
CONCURRENCE: FELICIA PHILLIPS / 1/10/95 ENVIRONMENTAL HEALTH
CONCURRENCE: DENNIS DAVIS / 1/24/95 SAFETY OFFICE
CONCURRENCE: MUSE MANN / 1/12/95 COMMUNICATIONS OFFICE

TELECOMMUNICATIONS EQUIPMENT AFFECTED BY THIS CONTRACT WORK IS NOT TO BE ALTERED OR REMOVED BY THE CONTRACTOR. CONTACT THE COTR IN THE EVENT OF A CONFLICT.

REF. NO.

S2

REV.	BY	DATE	REVISION	C.I. NO.	APPROVED
⚠1	LWG	8-7-96	LEAVE B.U.R. IN PLACE	AM. 1	LWG

NASA MARSHALL SPACE FLIGHT CENTER
HUNTSVILLE, ALABAMA 35812

REPAIR HIGH BAY ROOF OF STRUCTURES & DYNAMICS LABORATORY (4619)

SECTIONS, DETAILS

AE FIRM: TIPPETT CLEPPER ASSOCIATES			NASA AE CONTRACT NO. NASA 8-39883
SUBMITTED: JACK LYNCH	APPROVAL RECOMMENDED: M. L. REYNOLDS		ACCEPTED CHIEF ENGINEERING DIVISION P. W. ALLEN
RE: DATE: 12/21/94	ABST. DATE: 1-9-95		ABAE DATE: 2-1-95
DESIGNED JF	APPROVAL RECOMMENDED LWG		DWG NO
DRAWN JF	R. TURNER CHIEF, CIVIL/STRUCTURAL BRANCH		FAC-DF-4619-S2
CHECKED JL	DESIGN DATE: 1-9-95		
SCALED AS NOTED	SPEC NO. M4067		

MSFC MASTER BID DISK 11-18-2013

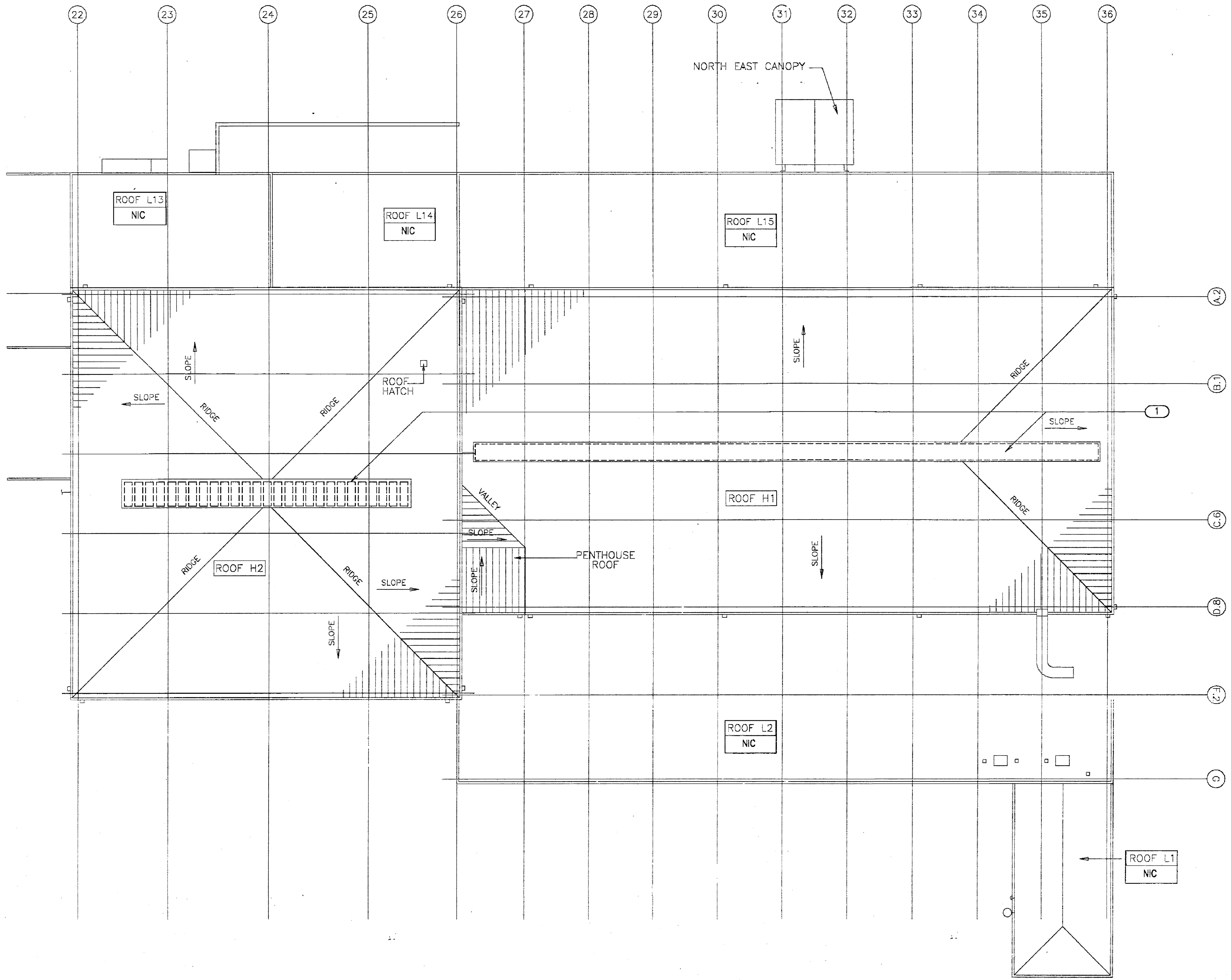

PARTIAL ROOF PLAN — EAST

1:200

NOTES:

(1) REMOVE EXISTING GRAVITY ROOF VENTILATORS. PROVIDE NEW GRAVITY ROOF VENTILATORS, SIZE AND CAPACITY TO MATCH EXISTING, EXTEND NEW CONTROL TUBING TO NEW DAMPERS WITH ACTUATORS. FREE AREA THROAT OPENINGS APPROXIMATELY
54865mm X 1525mm (ROOF H1)
27430mm X 1675mm (ROOF H2)
PROVIDE WITH 12mm (MILLIMETER) MESH BIRDSCREEN.
MINIMUM CAPACITY:
7783 CUBIC METERS PER MINUTE (ROOF H1)
4386 CUBIC METERS PER MINUTE (ROOF H2)
DISCONNECT EXISTING CONTROL TUBING FROM VENTILATORS. EXTEND NEW CONTROL TUBING FROM EXISTING CONTROL TUBING AT GROUND LEVEL TO ROOFS AND VENTILATOR DAMPERS. PROVIDE SEPARATE TUBING TO ROOF H1 AND H2 FROM GROUND LEVEL. CAP OPEN ENDS OF EXISTING CONTROL TUBING.

GENERAL NOTES (APPLIES TO M- SHEETS AND NOTES)

A. DIMENSIONS ARE IN MILLIMETERS (mm). DIMENSIONS ARE APPROXIMATE.

B. THE CONTRACTOR SHALL FIELD VERIFY DIMENSIONS SHOWN AND CONDITIONS PERTAINING TO THE EXISTING STRUCTURE PRIOR TO COMMENCING WORK. SUBMIT CONTRACTORS SHOP DRAWINGS WITH DIMENSIONS FOR FRAMED STEEL OPENINGS AND CURB SIZES TO THE CONTRACTING OFFICER AND COORDINATED WITH STRUCTURAL STEEL AND ROOFING SUBCONTRACTORS, INDICATING SUCH COORDINATION IN WRITING FROM EACH SUBCONTRACTOR PRIOR TO FABRICATION.

1:200 0 2 000 4 000 8 000 16 000

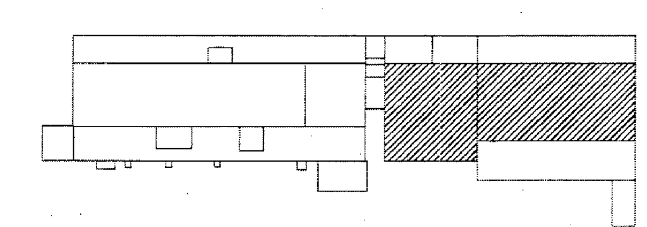

BUILDING 4619
KEY PLAN

CONCURRENCE: R. A. 1/19/95	REV. / BY / DATE / REVISION / C.I. NO. / APPROVED	
CONCURRENCE: / / / /		
CONCURRENCE: / / / /		
CONCURRENCE: MAINTENANCE 1/11/95	NASA Marshall Space Flight Center, Huntsville, Alabama 35812	
CONCURRENCE: USING OFFICE 1/19/95		
CONCURRENCE: ENVIRONMENTAL HEALTH 1/10/95	REPAIR HIGH BAY ROOF OF STRUCTURES & DYNAMICS LABORATORY (4619)	
CONCURRENCE: SAFETY OFFICE 1/24/95	EAST ROOF PLAN— MECHANICAL PLAN	
CONCURRENCE: COMMUNICATIONS OFFICE 1/12/95	AE FIRM: TIPPETT CLEPPER ASSOCIATES	NASA AE CONTRACT NO. NASA 8-39883
TELECOMMUNICATIONS EQUIPMENT AFFECTED BY THIS CONTRACT WORK IS NOT TO BE ALTERED OR REMOVED BY THE CONTRACTOR. CONTACT THE COTR IN THE EVENT OF A CONFLICT.	SUBMITTED: [signature] / APPROVAL RECOMMENDED: M. L. Reynolds	APPROVED: CHIEF ENGINEERING DIVISION
REF. NO.	RE DATE: 21 DEC 1994 / AB21 DATE: 1-9-95	AB41 DATE: 2/1/95
M1	DESIGNED GFG / DRAWN DBD / CHECKED WDS / SCALE: 1:200 / APPROVAL RECOMMENDED: T. A. Com, CHIEF: MECH/ELECT BRANCH / DESIGN DATE: 1-9-95 / SPEC. NO. M4067	DWG NO FAC-DF-4619-M1

ALABAMA REGISTERED PROFESSIONAL ENGINEER No. 15696 WARREN DOUGLAS SHIVER

ARCHITECTURAL INFORMATION 30x42
DATE: 01/05/95 TIME: 13:04 FILE: K:\93N191.PRJ\C4L2
DATE: 01/05/95 TIME: 15:40 FILE: C:\93N191.PRJ\C4L2M-01

MSFC MASTER BID DISK 11-18-2013

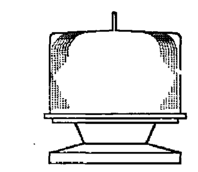

TYPE 'D'
NOT TO SCALE

120V MEDIUM INTENSITY STROBE BEACON FOR LIGHTING STRUCTURES UP TO 152 METERS (152,400 mm) HIGH.A SINGLE BEACON PROVIDES 360° COVERAGE FOR STRUCTURES UP TO 107 METERS (106,680 mm).COMPLIES WITH FAA L-865 AS SYNCHRONOUS FLASHING LIGHT SYSTEM OR FAA L-866 AS SEQUENTIAL FLASHING LIGHT SYSTEM.

CONSISTS OF FLASH-HEAD AND SEPARATE POWER SUPPLY. POWER SUPPLY IS USUALLY LOCATED AT BASE OF STRUCTURE, UP TO 300,000 mm AWAY.

CONTROLLED BEAM: 3° MINIMUM VERTICAL.
FLASH RATE: 40 PER MINUTE
FLASH DURATION: <10 MILLISECONDS DAY/TWILIGHT; 100-250 MILLISECONDS NIGHT.
ONE PHOTOCELL PER POWER SUPPLY. INTERCONNECTING CABLES MUST BE ORDERED SEPARATELY.

FIXTURE TYPE INDICATED ON THIS SHEET SHALL ALSO CONFORM TO REQUIREMENTS SPECIFIED AND INDICATED IN THE CONTRACT DOCUMENTS.

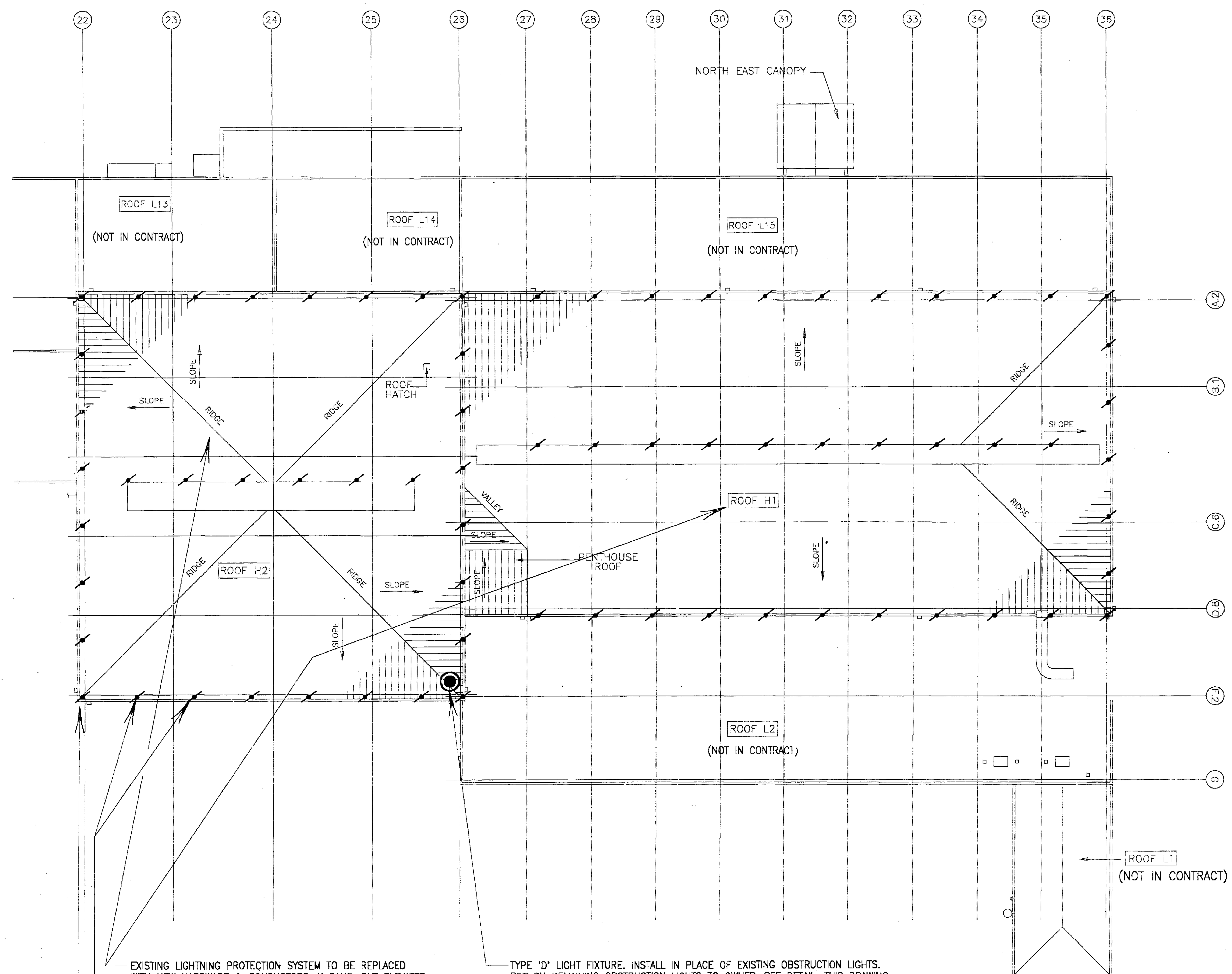

EXISTING LIGHTNING PROTECTION SYSTEM TO BE REPLACED WITH NEW HARDWARE & CONDUCTORS IN SAME, BUT ELEVATED, LOCATIONS AFTER COMPLETION OF NEW ROOF. CONTRACTOR TO VERIFY GROUND RESISTANCE TO MAINTAIN RATING OF SYSTEM.

TYPE "D" LIGHT FIXTURE. INSTALL IN PLACE OF EXISTING OBSTRUCTION LIGHTS. RETURN REMAINING OBSTRUCTION LIGHTS TO OWNER. SEE DETAIL, THIS DRAWING. REUSE EXISTING POWER CIRCUIT AND CONTROLS. MAINTAIN AIRCRAFT WARNING LIGHTING IN OPERATION DURING ENTIRE CONSTRUCTION CONTRACT.

TYPICAL LIGHTNING PROTECTION AIR TERMINAL 305 mm TALL ON APPROXIMATELY 5400 mm CENTERS. REMOVE EXISTING (APPROX 71) AIR TERMINALS & REPLACE WITH NEW IDENTICAL TERMINALS IN SAME LOCATIONS ON PLAN, ON NEW ROOF SURFACE. CONNECT TO DOWNCOMERS IN APPROVED MANNER FOR MASTER LABEL PROTECTION.

TYPICAL EXISTING AIRCRAFT WARNING LIGHT (1 @ EACH CORNER) REMOVE ALL 4 & REPLACE WITH 1 TYPE 'D' FIXTURE.

PARTIAL ROOF PLAN – EAST
1:200

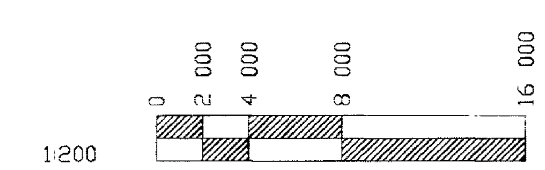

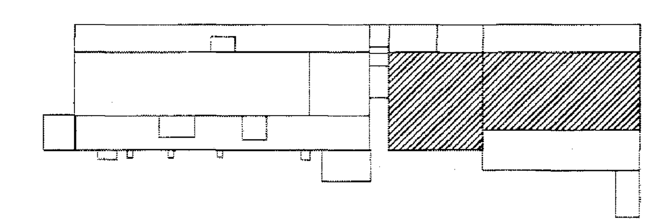

BUILDING 4619
KEY PLAN

CONCURRENCE: 1 / 19 / 95
CONCURRENCE: / / /
CONCURRENCE: / / /
MAINTENANCE: 1 / 11 / 95
USING OFFICE: 1 / 19 / 95
ENVIRONMENTAL HEALTH: 1 / 18 / 95
SAFETY OFFICE: 1 / 24 / 95
COMMUNICATIONS OFFICE: 1 / 12 / 95

TELECOMMUNICATIONS EQUIPMENT AFFECTED BY THIS CONTRACT WORK IS NOT TO BE ALTERED OR REMOVED BY THE CONTRACTOR. CONTACT THE COTR IN THE EVENT OF A CONFLICT.

REV.	BY	DATE	REVISION	C.I. NO.	APPROVE

NASA — Marshall Space Flight Center, Huntsville, Alabama 35812

REPAIR HIGH BAY ROOF OF STRUCTURES & DYNAMICS LABORATORY (4619)

EAST ROOF PLAN – ELECTRICAL PLAN

AE FIRM: TIPPETT CLEPPER ASSOCIATES
NASA AE CONTRACT NO. NASA 8-39883
SUBMITTED:
APPROVAL RECOMMENDED:
APPROVED: CHIEF ENGINEERING DIVISION
DATE 21 DEC 1994
DATE 1-9-95
DATE 2/1/95
DESIGNED JGS
DRAWN JGS
CHECKED RMB
SCALE 1:200
APPROVAL RECOMMENDED: CHIEF, MECH/ELECT BRANCH
DESIGN DATE 1/3/95
SPEC NO. M4067
DWG NO. FAC-DF-4619-E1
REF. NO.
E1

ALABAMA REGISTERED PROFESSIONAL ENGINEER No. 15696 WARREN DOUGLAS SMITH

ARCHITECTURAL INFORMATION 01/05/95 15:04 RJR 30x42 K:\R93N191.PRJ\CA02

DATE: 01/05/95 TIME: 15:36 USER: RJR/DFG #16 FILE: G:\R93N191.PRJ\CA02E1

MSFC MASTER BID DISK 11-18-2013

REPAIR NORTHWEST AND SOUTHWEST LOW ROOFS OF STRUCTURES & DYNAMICS LABORATORY (4619)

NASA

MARSHALL SPACE FLIGHT CENTER
HUNTSVILLE, ALABAMA 35812

TIPPETT CLEPPER ASSOCIATES / ARCHITECTS
OCTOBER 15, 1997
A/E CONTRACT NO. NASA 8-39884

INDEX OF DRAWINGS

DWG. NO.	TITLE	DWG. NO.	TITLE
T1	INDEX, LOCATION MAPS, LEGEND & SYMBOLS	S5	P1 AND P2 ELEVATIONS AND SECTIONS
		S6	MISCELLANEOUS SECTIONS AND DETAILS
A1	OVERALL PLANS, ELEVATIONS AND GENERAL NOTES	S7	AIRLOCK PLANS, ELEVATIONS AND DETAILS
A2	PARTIAL ROOF PLAN - WEST		
A3	PARTIAL SOUTH ELEVATION	M1	NOTES AND LEGEND
A4	ROOF DETAILS - SHEET 1	M2	INTERSTTIAL SPACE AND ROOF PLAN - 1
A5	ROOF DETAILS - SHEET 2	M3	PARTIAL SOUTH ELEVATION - 1
A6	ROOF DETAILS - SHEET 3	M4	PARTIAL SOUTH ELEVATION - 2
		M5	NOTES
S1	GENERAL NOTES, ABBREVIATIONS		
S2	PARTIAL ROOF PLAN - WEST	E1	ELECTRICAL NOTES AND LEGENDS
S3	L10 PLAN, ELEVATIONS AND SECTIONS	E2	INTERSTITIAL SPACE AND ROOF PLAN
S4	PARTIAL SOUTH ELEVATION AND PLAN		

LEGEND OF SYMBOLS

ROOF L7 — BUILDING SEGMENT IDENTIFICATION

NORTH ARROW

A / A20 — INDICATES SECTION NUMBER; SECTION REFERENCE; INDICATES SHEET NUMBER ON WHICH SECTION IS DRAWN

RP3 — METAL PANEL / GUTTER TYPE – RP = ROOF PANEL, G = GUTTER

1 / A.2 — ELEVATION KEY

STAIR L13(1) — INDICATES STAIR / LADDER LOCATION; STAIR / LADDER IDENTIFICATION; INDICATES STAIR / LADDER NUMBER

LEGEND OF ABBREVIATIONS

CJ	CONTROL JOINT
DS	NEW DOWNSPOUT
EDS	EXISTING DOWNSPOUT
M	METER
mm	MILLIMETER
NIC	NOT IN CONTRACT
NTS	NOT TO SCALE
OC	ON CENTERS
SB	PRECAST CONCRETE SPLASH BLOCK
TS	TUBULAR STEEL
UNO	UNLESS NOTED OTHERWISE
VOC	VOLATILE ORGANIC COMPOUND

CODE DATA

BUILDING CODE: 1991 UNIFORM BUILDING CODE
WIND LOADS: ASCE-7-88
SEISMIC DESIGN: UNIFORM BUILDING CODE (ZONE 1)
SEE ALSO DRAWING S1 FOR FOR DESIGN LOAD DATA

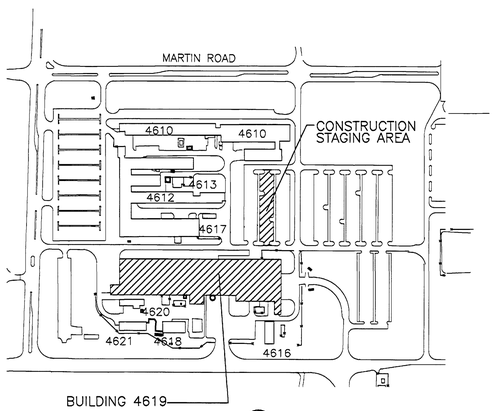

LOCATION MAP (NTS)

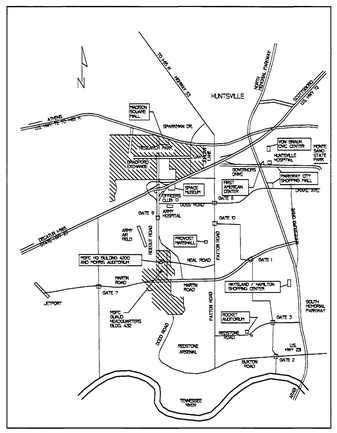

VICINITY MAP (NTS)

CONVERSION CHART FOR GAGE

USS : UNITED STATES STANDARD	mm : METRIC EQUIVALENT
14	1.98 mm
16	1.59 mm
18	1.27 mm
20	0.95 mm
22	0.79 mm
24	0.63 mm
26	0.47 mm
28	0.40 mm
30	0.32 mm

SYSTEMS

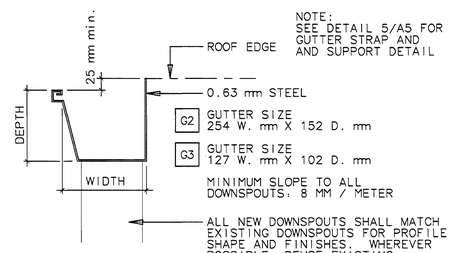

NOTE: SEE DETAIL 5/A5 FOR GUTTER STRAP AND AND SUPPORT DETAIL

GUTTER PROFILES SHOWN MAY NOT BE AVAILABLE AS A STANDARD PRODUCT OF THE ROOFING MANUFACTURER. THE PROFILE AND PROPORTIONS OF THE GUTTER SHALL MATCH THIS DRAWING.

TYPICAL GUTTER PROFILE
FEDERAL SPECIFICATION 25109 BLUE N.T.S.

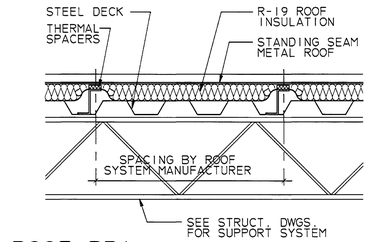

ROOF RP1 ROOF COLOR FED SPEC 25109 BLUE RP1
N.T.S.

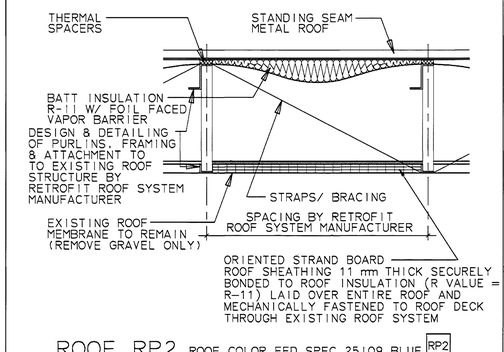

ROOF RP2 ROOF COLOR FED SPEC 25109 BLUE RP2
N.T.S.

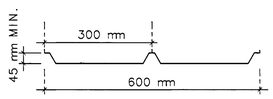

STANDING SEAM ROOF PROFILE
N.T.S.

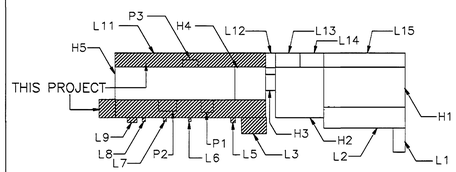

SHEET KEY PLAN

NOTE: ALL METAL PANELS, TRIMS, AND ACCESSORIES ARE NEW EXCEPT FOR EXISTING WALL OR GIRT

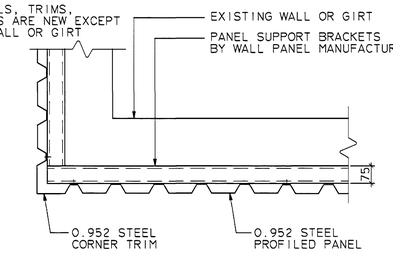

VERTICAL WALL PANEL VP1
FED SPEC 26440 LT. GREY N.T.S.

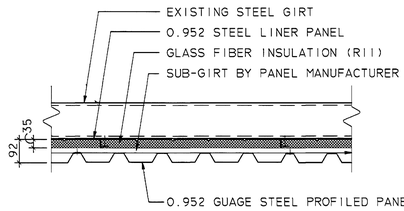

VERTICAL WALL PANEL VP2
FED SPEC 25109 BLUE N.T.S.

VERTICAL PANEL PROFILE
N.T.S.

CONCURRENCE. R.A. 12/16/97							
CONCURRENCE. Christian W. Kluge 12/17/97							
CONCURRENCE. / / /							
CONCURRENCE. / / /	REV.	BY	DATE	REVISION	C.I. NO.	APPROVED	
MAINTENANCE CONCURRENCE. / / /							
USING OFFICE CONCURRENCE. / / /							
ENVIRONMENTAL HEALTH CONCURRENCE. / / /							
SAFETY OFFICE CONCURRENCE. 12/14/97							
COMMUNICATIONS OFFICE CONCURRENCE. 12/16/97							

TELECOMMUNICATIONS EQUIPMENT AFFECTED BY THIS CONTRACT WORK IS NOT TO BE ALTERED OR REMOVED BY THE CONTRACTOR. CONTACT THE COTR IN THE EVENT OF A CONFLICT.

NASA MARSHALL SPACE FLIGHT CENTER HUNTSVILLE, ALABAMA 35812

REPAIR NORTHWEST AND SOUTHWEST LOW ROOFS OF STRUCTURES & DYNAMICS LABORATORY (4619)

INDEX, LOCATION MAPS LEGENDS & SYMBOLS

AE FIRM: TIPPETT CLEPPER ASSOCIATES		NASA AE CONTRACT NO. NASA 8-39884	
SUBMITTED.	APPROVAL RECOMMENDED?	APPROVED - CHIEF ENGINEERING DIVISION	
REF. NO.	RE. DATE. 10/15/1997	ABR1 DATE. 12/18/97	ABM1 DATE.
T1	DESIGNED BLP / DRAWN DJM / CHECKED RSS / SCALE. NO SCALE	APPROVAL RECOMMENDED. CHIEF, ARCHITECTURAL BRANCH. DESIGN DATE. SPEC. NO. M4125	DWG NO FAC-EB-4619-T1

FILE NAME: M42-T1.VWF

MSFC MASTER BID DISK 11-18-2013

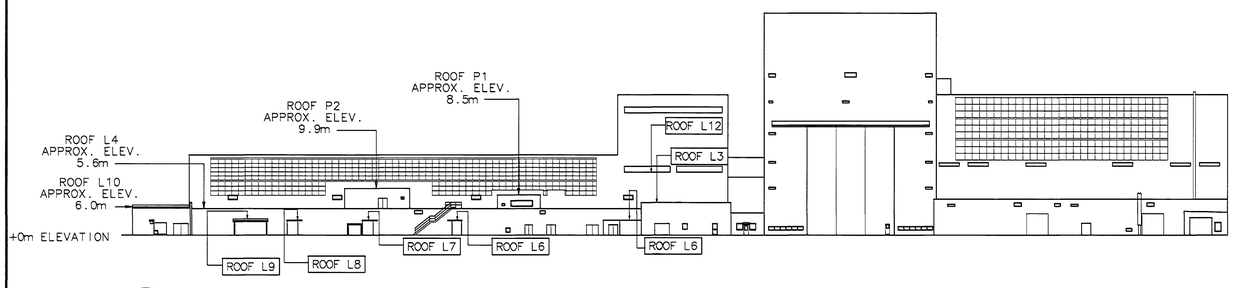

5 / A1 SOUTH ELEVATION

1:500

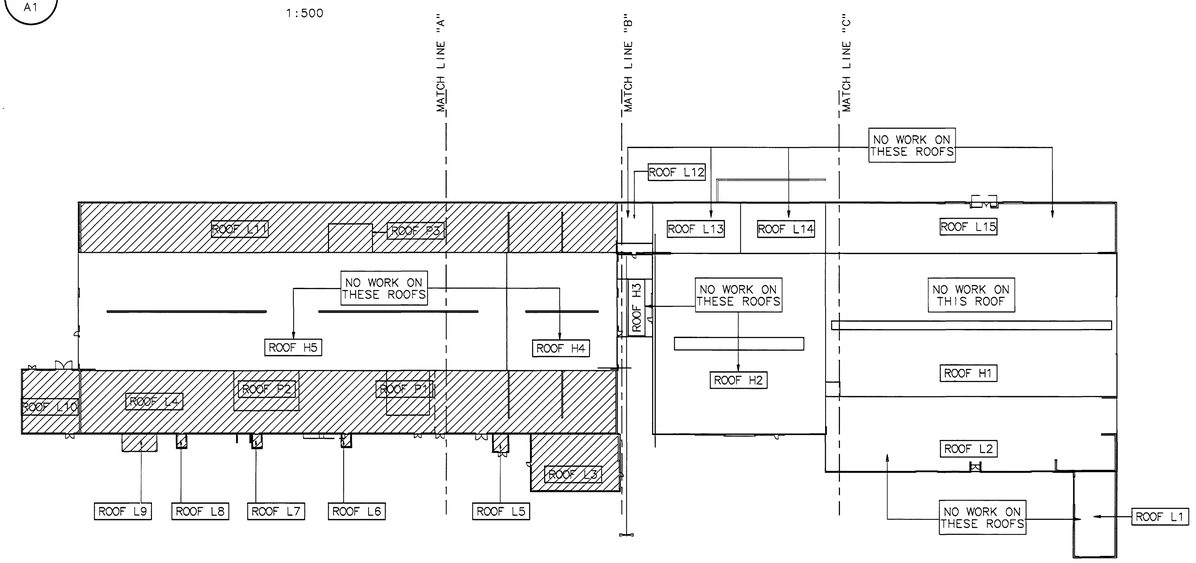

4 / A1 ROOF PLAN

1:500

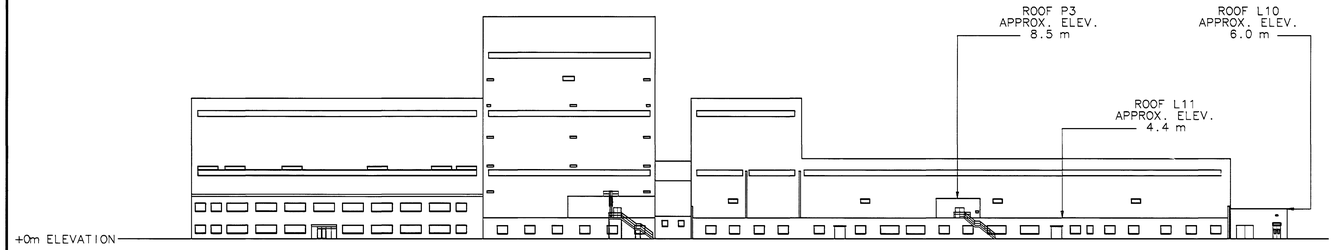

1 / A1 NORTH ELEV

1:500

NOTES

1. THE PURPOSE OF THIS DRAWING IS TO SHOW AN OVERALL PLAN AND ELEVATION OF THE BUILDING INCLUDING APPROXIAMTE ELEVATIONS OF ROOFS FOR CONTRACTORS INFORMATION.

NOTES

SPECIAL NOTES REGARDING RETROFIT ROOFS:

1. THE RETROFIT ROOFING SYSTEM SHALL BE THE RESPONSIBILITY OF A SINGLE MANUFACTURER WHO IS REGULARLY ENGAGED IN THE FABRICATION AND ERECTION OF THE ROOF SYSTEM. THE MANUFACTURER SHALL BE RESPONSIBLE FOR THE ENGINEERING AND DESIGN OF ALL COMPONENTS USED IN THE FABRICATION AND ERECTION OF THE ROOF SYSTEM.
2. THE EXISTING BUILDING WILL REMAIN OCCUPIED DURING THE COURSE OF CONSTRUCTION. THE CONTRACTOR SHALL EXCERCISE EXTREME CAUTION TO MAINTAIN SAFE CONDITIONS FOR THE OCCUPANTS OF THE BUILDING.
3. THE CONTRACTOR SHALL MAINTAIN COMPLETE WEATHER TIGHT-NESS OF THE BUILDING DURING CONSTRUCTION.
4. THE CONTRACTOR SHALL SUBMIT A DETAILED WORK PLAN FOR REMOVAL OF EXISTING ROOF BALLAST, INSTALLATION OF NEW ROOF SYSTEM AND TEMPORARY PROTECTIVE MEASURES PROPOSED TO KEEP THE EXISTING BUILDING WEATHER TIGHT. THIS PLAN SHALL BE SUBMITTED NASA AND APPROVED BY THEM PRIOR TO COMMENCING ANY WORK.
5. IT IS THE INTENT THAT THE EXISTING ROOFING MEMBRANE BE LEFT IN PLACE AND ONLY THE GRAVEL BE REMOVED FROM THE ROOFING. REMOVE ALL LOOSE GRAVEL BY BRUSHING FIRST WITH A VERY STIFF BROOM AND THEN BY VACUUMING ALL LOOSE GRAVEL. THE CONTRACTOR SHALL AT ALL TIMES PROTECT THE BUILDING AND ITS CONTENTS FROM WEATHER DAMAGE THAT COULD RESULT FROM THE WORK OF THIS PROJECT. THE EXPERIMENTS AND EQUIPMENT LOCATED INSIDE UNDER THE AREAS WHERE WORK IS TO BE DONE ARE SENSITIVE AND CRITICAL ONGOING EXPERIMENTS THAT, IF DAMAGED OR INTER-RUPTED, COULD RESULT IN EXTREME FINANCIAL EXPENSE.

GENERAL NOTES:

1. ALL NEW ROOF SLOPES ARE 1:24 UNLESS NOTED OTHERWISE.
2. SEE "SPECIAL NOTES REGARDING RETROFIT ROOFS" ABOVE.
3. REUSE EXISTING HOLES IN ASBESTOS SIDING FOR ATTACHING DOWNSPOUTS.
4. PROVIDE NEW PRECAST CONCRETE SPLASH BLOCKS AT BOTTOM OF EACH DOWNSPOUT.
5. ALL FLASHING AND EXPOSED METAL SHALL BE PREFINISHED UNLESS NOTED OTHERWISE.
6. ALL CRICKETS ARE TO BE SAME MATERIAL, GAUGE, FINISH AND CONSTRUCTION AS METAL ROOF SYSTEM.
7. ATTACHMENT OF DOWNSPOUTS, LADDERS AND OTHER ITEMS OF WORK TO EXISTING ASBESTOS PANELS WILL REQUIRE FASTENERS OR HOLES THROUGH EXISTING PANELS BY CONTRACTOR.
8. IF CONTRACTOR ENCOUNTERS LEAD PAINT ON PORTIONS OF THE WORK THAT WOULD REQUIRE PAINT REMOVAL, STOP WORK IN THAT PORTION OF THE WORK AND CONTACT THE CONTRACTING OFFICER FOR DIRECTIONS.
9. SURFACE COATINGS CONTAIN LEAD, CADMIUM, CHROMIUM, ARSENIC AND/OR OTHER METALS. DEMOLITION OR RENOVATION OF THESE SURFACE COATINGS MUST BE IN STRICT ACCORDANCE WITH RELEVANT OSHA STANDARDS (29 CFR 1910 AND 29 CFR 1926) AND NASA SPECIFICATIONS. THE CONTRACTOR MUST DETERMINE THE NEED FOR CONTROLS AND VERIFY THEIR ADEQUACY. AN IMPLEMENTATION PLAN DESCRIBING THE CONTRACTORS APPROACH TO EMPLOYEE PROTECTION MUST BE SUBMITTED TO CN01M FOR APPROVAL PRIOR TO COMMENCING WORK.

FIELD VERIFICATION/CUTTING AND PATCHING

FIELD VERIFICATION

PRIOR TO SUBMITTING BIDS, IT IS MANDATORY FOR THE CONTRACT-OR TO VERIFY ALL FIELD CONDITIONS AND CAREFULLY COMPARE SUCH FIELD MEASUREMENTS AND CONDITIONS AND OTHER INFORMA-TION KNOWN TO THE CONTRACTOR WITH THE CONTRACT DOCUMENTS BEFORE BIDDING.

LOCATIONS OF EXISTING ITEMS OF WORK INCLUDING BUT NOT LIMITED TO ROOF PENETRATIONS, WALL PENETRATIONS, MECHANICAL EQUIPMENT, ROOF HATCHES, LADDERS, PIPING, SUPPORTS, ETC. ARE BASED ON EXISTING DRAWINGS, PHOTOGRAPHS AND OTHER INFORMATION COLLECTED ON SITE. IT IS LIKELY THAT SOME OF THE EXISTING WORK SHOWN IS EITHER NOT AT THE LOCATION SHOWN, HAS BEEN MOVED TO A DIFFERENT LOCATION, OR HAS BEEN REMOVED AFTER THE FIELD DATA WAS GATHERED. IT IS ALSO POSSIBLE THAT SOME NEW ITEMS HAVE BEEN ADDED TO THE BUILDING. THE CONTRACTOR IS THEREFORE CAUTIONED FROM RELYING ON THE ACCURACY OF THE EXISTING CONDITIONS DEPICTED ON THESE DRAW-INGS AND IS REQUIRED TO VISIT THE SITE TO VERIFY THE SCOPE OF THE WORK BASED ON THE INTENT OF THESE DOCUMENTS.

THE CONTRACTOR SHALL BE RESPONSIBLE FOR CUTTING, FITTING OR PATCHING REQUIRED TO COMPLETE THE WORK OR TO MAKE ITS PARTS FIT TOGETHER.

HANDLING, DUST CONTROL AND REMOVAL OF ASBESTOS MATERIAL

SAMPLES TAKEN FROM VARIOUS ROOFS BY NASA INDICATE THAT THERE IS NO ASBESTOS ON ROOFS. IF THE CONTRACTOR ENCOUNTERS ANY OTHER ASBESTOS-CONTAINING MATERIALS ON THE ROOF, THEY SHALL STOP WORK IN THAT AREA IMMEDIATELY AND CONTACT THE CONTRACTING OFFICER FOR FURTHER DIRECTIONS. THE FOLLOWING NOTES APPLY ONLY TO THE REMOVAL OF ASBESTOS-CONTAINING MASTIC AROUND THE ROOF HATCH:

- A: WORKER PROTECTION AND PRACTICES SHALL CONFIRM WITH OSHA SAFETY AND HEALTH STANDARDS (29 CFR, 1910.1001 AND 1926.1101).
- B: ALL WORKERS SHALL WEAR AND APPROVED ASBESTOS RES-PIRATOR AND APPROVED PROTECTIVE CLOTHING.
- C: NO ASBESTOS FIBERS SHALL BE ALLOWED TO ENTER THE INTERIOR OF THE BUILDING. WORK AREA SHALL BE SEALED OFF TO PREVENT DUST AND DEBRIS FROM BEING DISTRIBUTED OVER A WIDE AREA.

THE CONTRACTOR SHALL SUBMIT A DETAILED WRITTEN PLAN FOR APPROVAL WHICH SHALL DESCRIBE THE METHODS AND EQUIPMENT TO BE USED TO ACHIEVE THE ASBESTOS REMOVAL IN CONFORMANCE WITH THE REQUIREMENTS LISTED ABOVE. THE CONTRACTOR SHALL PRO-VIDE THE CONTRACTING OFFICER WITH A MINIMUM 30-DAY NOTICE PRIOR TO THE START OF ASBESTOS WORK. NO WORK SHALL PROCEED UNTIL APPROVAL OF ASBESTOS PLAN HAS BEEN GRANTED BY THE CONTRACTING OFFICER.

PAINTING NOTES:

CLEAN AND REPAINT ANY PREVIOUSLY PAINTED SURFACES THAT ARE ON OR ATTACHED TO THE ROOF AREAS COVERED BY THIS WORK SUCH AS RAILINGS, VENTS LADDERS, DOORS, PIPING ETC. PAINT ALL NEW ITEMS THAT ARE NOT PRE-FINISHED. DO NOT PAINT ITEMS THAT DO NOT REQUIRE PAINTING SUCH AS ANODIZED ALUMINUM.

FERROUS METAL (PREVIOUSLY PAINTED):
FIRST COAT: TNEMIC SERIES 50-330 POLY-URA PRIME
SECOND COAT: TNEMIC SERIES 73 ENDURA-SHIELD !!!
FERROUS METAL ; (NOT PREVIOUSLY PAINTED):
SHOP COAT: TNEMIC SERIES 66 HI-BUILD EPOXOLINE
FIRST COAT: TNEMIC SERIES 66 HI-BUILD EPOXOLINE
SECOND COAT: TNEMIC SERIES 73 ENDURA SHIELD !!!
GALVANIZED METAL : (PREVIOUSLY PAINTED)
FIRST COAT: TNEMIC SERIES 66 HI-BUILD EPOXOLINE
SECOND COAT: TNEMIC SERIES 73 ENDURA-SHIELD !!!
GALVANIZED METAL ; (NOT PREVIOUSLY PAINTED):
FIRST COAT: TNEMIC SERIES 66 HI-BUILD EPOXOLINE
SECOND COAT: TNEMIC SERIES 73 ENDURA-SHIELD !!!

PRODUCTS OF OTHER MANUFACTURERS THAT MEET OR EXCEED THE PERFORMANCE OF THE SPECIFIED PRODUCTS MAY BE SUBMITTED TO THE CONTRACTING OFFICER FOR CONSIDERATION IN ACCORDANCE WITH SUBSTITUTION REQUIREMENTS OF THE CONTRACT DOCUMENTS

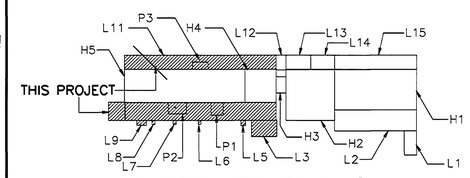

SHEET KEY PLAN

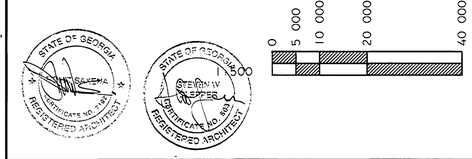

CONCURRENCE.
R.A.W. 12/16/97
CONCURRENCE.
/ / / /
CONCURRENCE.
/ / / /
CONCURRENCE.
MAINTENANCE 12/23/97
CONCURRENCE.
USING OFFICE / / / /
CONCURRENCE.
ENVIRONMENTAL HEALTH / / / /
CONCURRENCE.
SAFETY OFFICE 12/16/97
CONCURRENCE.
COMMUNICATIONS OFFICE 12/16/97

TELECOMMUNICATIONS EQUIPMENT AFFECTED BY THIS CONTRACT WORK IS NOT TO BE ALTERED OR REMOVED BY THE CONTRACTOR. CONTACT THE COTR IN THE EVENT OF A CONFLICT.

REF. NO.

A1

REV.	BY	DATE	REVISION	C.I. NO.	APPROVED

NASA MARSHALL SPACE FLIGHT CENTER
HUNTSVILLE, ALABAMA 35812

REPAIR OF NORTHWEST AND SOUTHWEST LOW ROOFS OF STRUCTURES AND DYNAMICS LABORATORY (4619)

OVERALL PLANS, ELEVATIONS AND GENERAL NOTES

AE FIRM, TIPPETT CLEPPER ASSOCIATES
NASA AE CONTRACT NO. NASA 8-39884

SUBMITTED.
APPROVAL RECOMMENDED. Richard Reynolds
CHIEF ENGINEERING DIVISION ACCEPTED FOR CONSTRUCTION. APPROVED.
RE. DATE: 10/15/97
AE&I DATE: 12/18/97
AE&I DATE.

DESIGNED BLP
DRAWN DJM
CHECKED RSS
SCALE: 1:500

APPROVAL RECOMMENDED.
CHIEF, ARCHITECTURAL BRANCH
DESIGN DATE.
SPEC. NO. M4125

DWG NO
FAC-EB-4619-A1

FILE NAME: M42-A1.VWF

MSFC MASTER BID DISK 11-18-2013

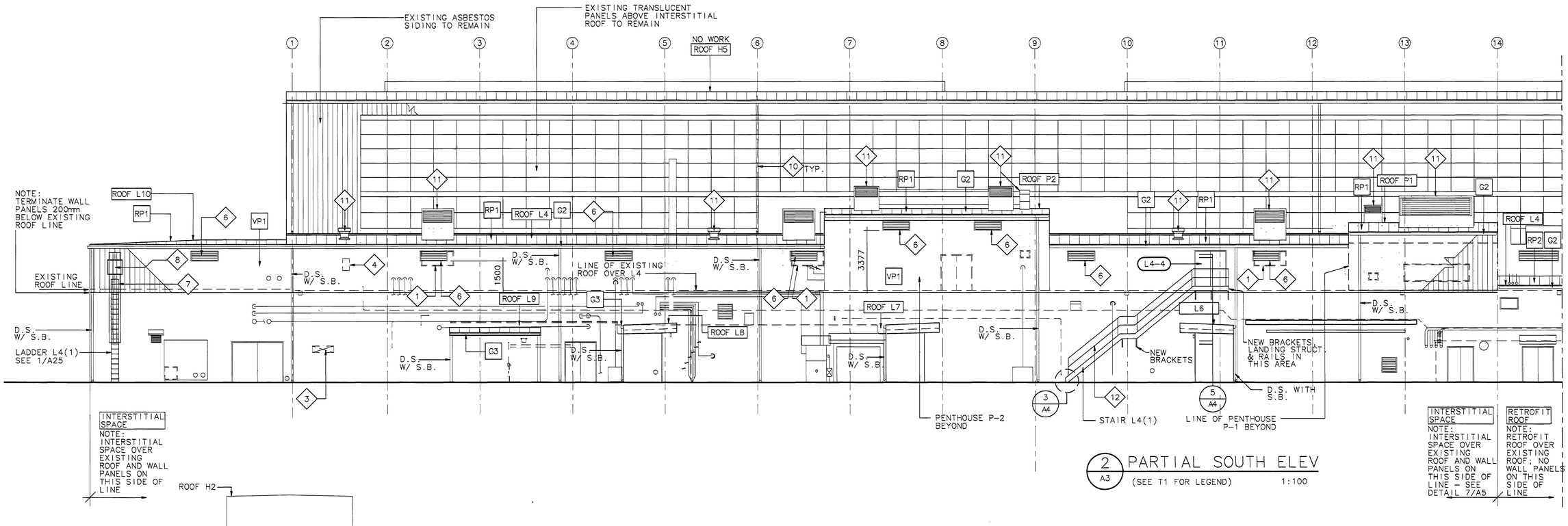

2 / A3 PARTIAL SOUTH ELEV
(SEE T1 FOR LEGEND) 1:100

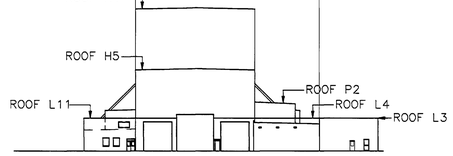

1 / A3 WEST ELEVATION
(SEE T1 FOR LEGEND) 1:500

NOTES :

1. SEE MECHANICAL DRAWINGS FOR IDENTIFICATION OF EXISTING PIPING, PENETRATIONS, & EQUIPMENT
2. SEE GENERAL NOTE A ON DRAWING A-1 FOR FIELD VERIFICATION REQUIREMENTS.

ARCHITECTURAL NOTES (THIS SHEET ONLY)

NOTE	DESCRIPTION	ACTION	OTHER
1	EXISTING LOUVER ON SOUTH FACE OF H5	SEE DWGS. M2 & M4 FOR REROUTED DUCTWORK WITH NEW LOUVER	
2	NOT USED		
3	EXISTING BLANKED-OFF OPENING IN WALL	LEAVE AS IS	
4	EXISTING ACCESS PANEL ON SOUTH FACE OF H5	EXISTING ACCESS PANEL TO REMAIN.	
6	NEW LOUVER 1500 W X 600 H	PROVIDE LOUVER WITH BIRD SCREEN	SAME GAUGE AS METAL PANEL; COORDINATE LOUVER MOUNTING AND FLASHING WITH METAL PANEL SYSTEM (FREE AREA OF LOUVER SHALL NOT BE LESS THAN 70%) LOUVER TO BE PREFINISHED
7	NEW STEEL LADDER L4(1) WITH CAGE	SEE 9/A4	
8	NEW EGRESS HATCH IN WALL PANEL	SEE 9/A4	
9	NOT USED		

ARCHITECTURAL NOTES (THIS SHEET ONLY)

NOTE	DESCRIPTION	ACTION	OTHER
10	EXISTING DOWNSPOUT FACE OF H5	CUT BOTTOMS OF EXISTING DOWNSPOUTS AND PROVIDE 90 DEGRESS ELBOWS AT BOTTOM OF DOWNSPOUT TO TERMINATE NEATLY ABOVE NEW ROOF, PROFILE OF ELBOW SHALL MATCH EXISTING DOWNSPOUT. SEE DETAIL ON SMACNA MANUAL 1987 ED. PLATE 31	
11	RELOCATED DUCT OR HOOD, ROOFTOP EQUIPMENT	SEE 10/A5 FOR CURB DETAIL SEE MECHANICAL DRAWINGS FOR EQUIPMENT TO BE RELOCATED	
12	EXISTING STAIR	EXISTING STAIR AND RAILINGS TO REMAIN. PROVIDE NEW SUPPORT FOR STAIRS, PROVIDE NEW LANDING SEE DRGS 2/A4, 8/A5 AND 2/S4	

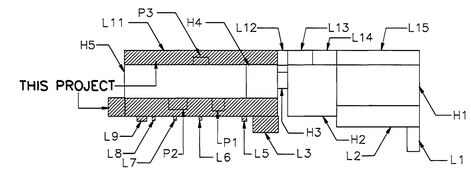

SHEET KEY PLAN

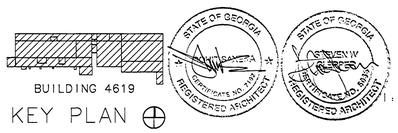

KEY PLAN

1:100

CONCURRENCE.							
CONCURRENCE.							
CONCURRENCE.							
CONCURRENCE. MAINTENANCE	REV.	BY	DATE	REVISION	C.I. NO.	APPROVED	
CONCURRENCE. USING OFFICE							
CONCURRENCE. ENVIRONMENTAL HEALTH							
CONCURRENCE. SAFETY OFFICE							
CONCURRENCE. COMMUNICATIONS OFFICE							

TELECOMMUNICATIONS EQUIPMENT AFFECTED BY THIS CONTRACT WORK IS NOT TO BE ALTERED OR REMOVED BY THE CONTRACTOR. CONTACT THE COTR IN THE EVENT OF A CONFLICT.

NASA MARSHALL SPACE FLIGHT CENTER
HUNTSVILLE, ALABAMA 35812

REPAIR NORTHWEST AND SOUTHWEST LOW ROOFS OF STRUCTURES AND DYNAMICS LABORATORY (4619)

PARTIAL SOUTH ELEVATION

AE FIRM: TIPPETT CLEPPER ASSOCIATES		NASA AE CONTRACT NO. NASA 8-39884
SUBMITTED.	APPROVAL RECOMMENDED.	CHIEF ENGINEERING DIVISION ACCEPTED FOR CONSTRUCTION. APPROVED.
REF. NO.	RE. DATE. 10/15/97	ABZ1 DATE. 12/18/97	ABM1 DATE.
A3	DESIGNED BLP DRAWN DJM CHECKED RSS SCALE. 1:100	APPROVAL RECOMMENDED. CHIEF. ARCHITECTURAL BRANCH DESIGN DATE. SPEC. NO. M4125	DWG NO FAC-EB-4619-A3

FILE NAME: M42-A3.VWF

MSFC MASTER BID DISK 11-18-2013

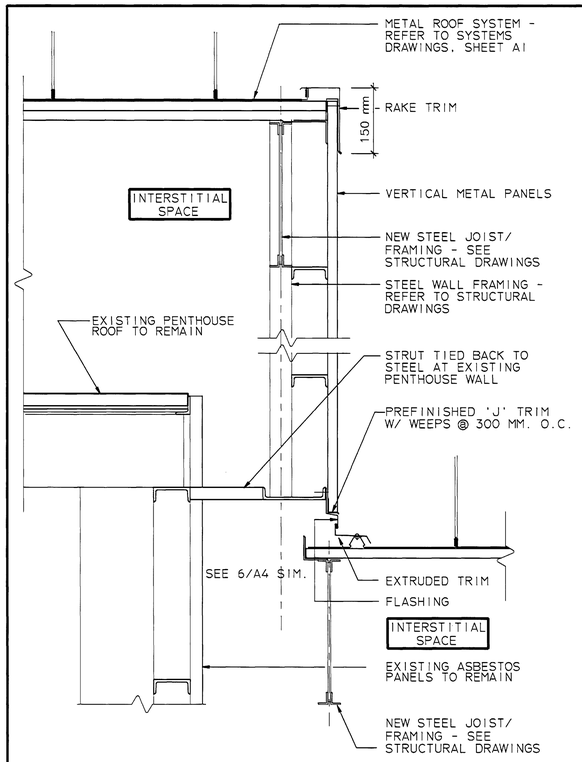

1/A4 DETAIL @ ROOF LEVEL CHANGE @ INTERSTITIAL SPACE

1:10

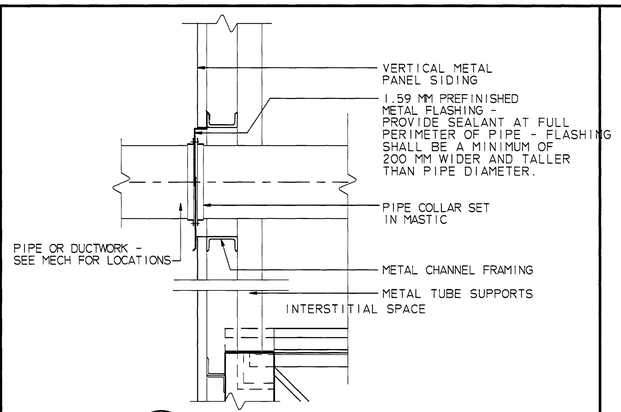

2/A4 WALL PENETRATION

1:10

NOTES

1. VERTICAL SECTION SIMILAR TO 8/A4, EXCEPT USE CONTINUOUS ANGLE WELDED BETWEEN EXISTING OR NEW SUPPORTS.
2. THIS DETAIL APPLIES TO ALL EXISTING PIPING THAT PENETRATES THE EXTERIOR SKIN OF THE BUILDING.

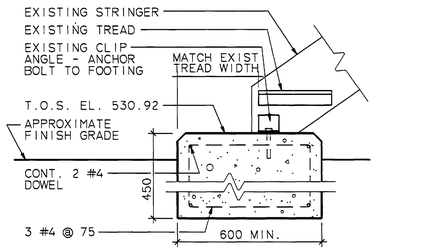

REMOVE EXISTING FOOTING & REPOUR NEW FOOTING. NEW FOOTING SHALL EXTEND OUT A MINIMUM OF 150 MM. MIN. FROM FACE OF STRINGER. REGRADE AND SOD ALL DISTURBED AREAS.

3/A4 FOOTING DETAIL @ STAIR L4(1)

1:10

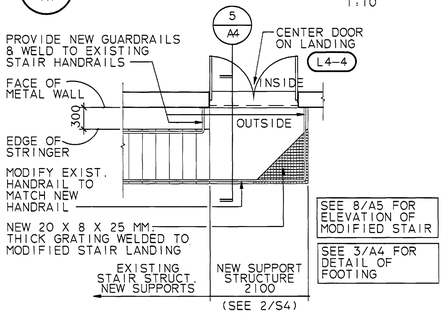

4/A4 PLAN AT STAIR L4(1)

1:10

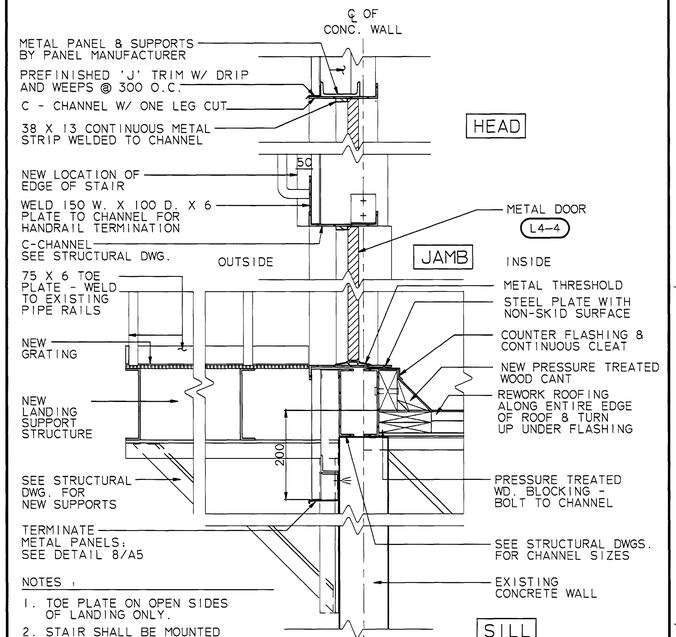

NOTES ,

1. TOE PLATE ON OPEN SIDES OF LANDING ONLY.
2. STAIR SHALL BE MOUNTED AT ORIGINAL MOUNTING HEIGHT - RELOCATE STAIR TO MAINTAIN 415 MM. CLEARANCE BETWEEN FACE OF METAL WALL AND EDGE OF STAIR.

5/A4 SECTION THROUGH STAIR L4(1) LANDING

1:10

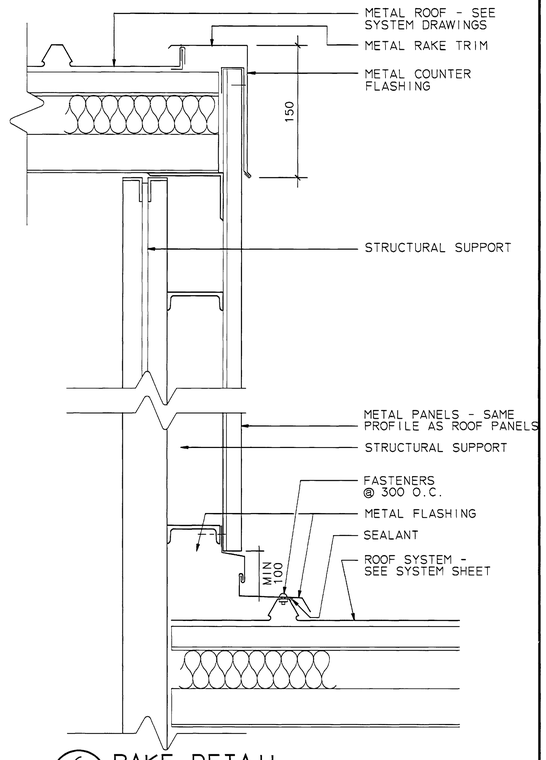

6/A4 RAKE DETAIL

1:5

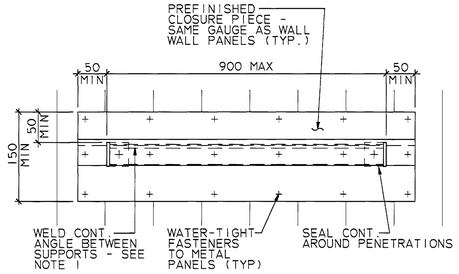

7/A4 ELEV. @ TYP. DOUBLE BRACKET PENETRATION

1:5

NOTE:
ALL FLASHING IS PREFINISHED 0.63 MM (U.S. 24 GAUGE)

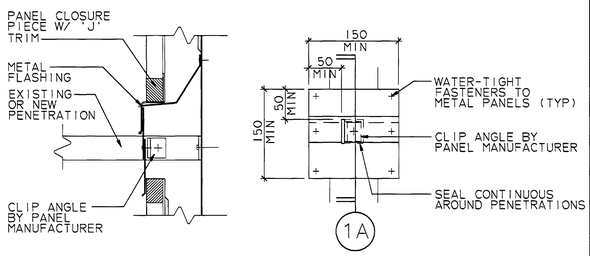

8/A4 TYPICAL ANGLE PENETRATION DETAIL

1:5

NOTE: EGRESS HATCH TO BE 914 X 914 MM GALVANIZED STEEL [FRAME 1.59 MM (16 GA), DOOR 1.98 MM (14 GA)] WITH DOOR SWING INTO INTERIOR SPACE. PROVIDE CYLINDER ON EXTERIOR SIDE AND THUMB TURN ON INSIDE FOR EGRESS. COORDINATE FLASHING AND MOUNTING WITH METAL FRAMING SYSTEM.

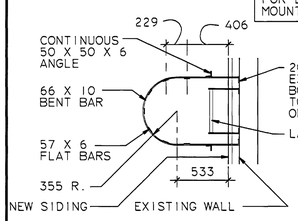

SECTION B

N.T.S.

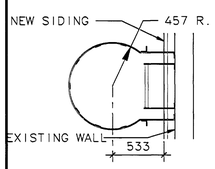

SEE SECTION B FOR TYP. NOTES

SECTION A

N.T.S.

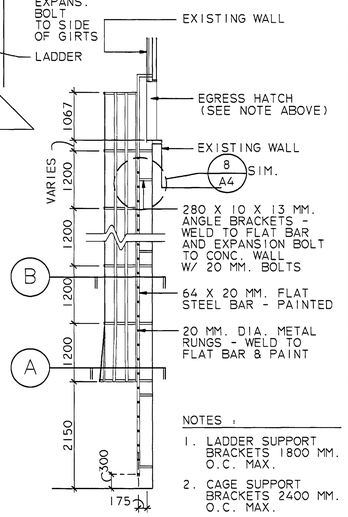

NOTES :

1. LADDER SUPPORT BRACKETS 1800 MM. O.C. MAX.
2. CAGE SUPPORT BRACKETS 2400 MM. O.C. MAX.

SECTION

1 : 50

9/A4 DETAIL @ CAGE LADDER L4(1)

AS NOTED

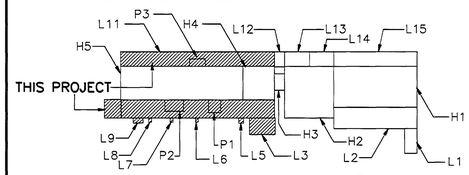

SHEET KEY PLAN ⊕

1:5

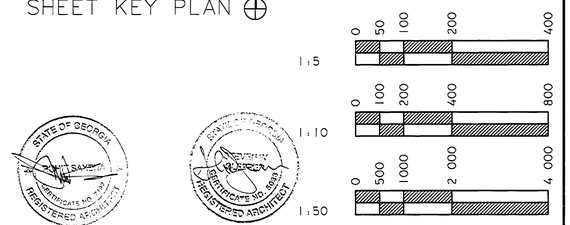

1:10

1:50

STATE OF GEORGIA ROBERT SAMPLE CERTIFICATE NO. 12345 REGISTERED ARCHITECT

STATE OF CALIFORNIA ROBERT SAMPLE CERTIFICATE NO. 12345 REGISTERED ARCHITECT

CONCURRENCE		REV.	BY	DATE	REVISION	C.I. NO.	APPROVED
	12/16/97						
	/ / / /						
	/ / / /						
MAINTENANCE	12/15/97						
USING OFFICE	/ / / /						
ENVIRONMENTAL HEALTH	/ / / /						
SAFETY OFFICE	12/16/97						
COMMUNICATIONS OFFICE	12/16/97						

TELECOMMUNICATIONS EQUIPMENT AFFECTED BY THIS CONTRACT WORK IS NOT TO BE ALTERED OR REMOVED BY THE CONTRACTOR. CONTACT THE COTR IN THE EVENT OF A CONFLICT.

NASA MARSHALL SPACE FLIGHT CENTER
HUNTSVILLE, ALABAMA 35812

REPAIR NORTHWEST AND SOUTHWEST LOW ROOFS OF STRUCTURES AND DYNAMICS LABORATORY (4619)

ROOF DETAILS - SHEET 1

AE FIRM, TIPPETT CLEPPER ASSOCIATES		NASA AE CONTRACT NO. NASA 8-39884	
SUBMITTED.	APPROVAL RECOMMENDED. Michael Reynolds	CHIEF ENGINEERING DIVISION ACCEPTED FOR CONSTRUCTION. APPROVED.	
REF. NO.	RE. DATE: 10/15/97	ABAI DATE: 12/15/97	ABAI DATE:
A4	DESIGNED BLP DRAWN DJM CHECKED RSS SCALE. VARIES	APPROVAL RECOMMENDED.	DWG NO FAC-EB-4619-A4
		CHIEF, ARCHITECTURAL BRANCH DESIGN DATE.	
		SPEC. NO. M4125	

FILE NAME: M42-JN44.VWF

MSFC MASTER BID DISK 11-18-2013

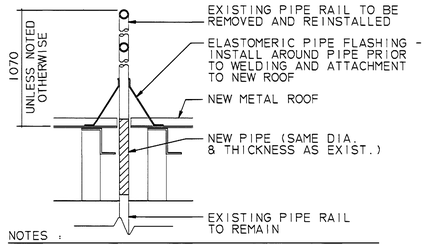

NOTES :

1. THIS DETAIL APPLIES TO ALL METAL GUARDRAILS AND INVOLVES CUTTING EXISTING PIPE NEATLY, ATTACHING NEW PIPE AND WELDING WITH CONTINUOUS WELD ALL AROUND TO ALLOW RAISING PIPE RAILS.
2. WELDED PORTION OF PIPE SHALL OCCUR UNDER THE SURFACE OF NEW ROOF. SIZE OF WELD SHALL BE BASED ON THICKNESS OF EXISTING PIPE.
3. FILL BOTTOM SECTION OF EXISTING PIPE RAIL WITH GROUT TO TOP OF CUT. LET SET THEN WELD NEW PIPE EXTENSIONS TO OLD. REPEAT FOR ATTACHING UPPER SECTION TO EXTENSIONS. AT PIPES THAT ARE OPEN AT BOTTOM, PLUG OPENING AT BOTTOM PRIOR TO FILLING WITH GROUT.
4. REPAINT NEW AND OLD PIPE RAILS.

1 A5 TYPICAL VERTICAL PIPE RAIL EXTENSION

1:10

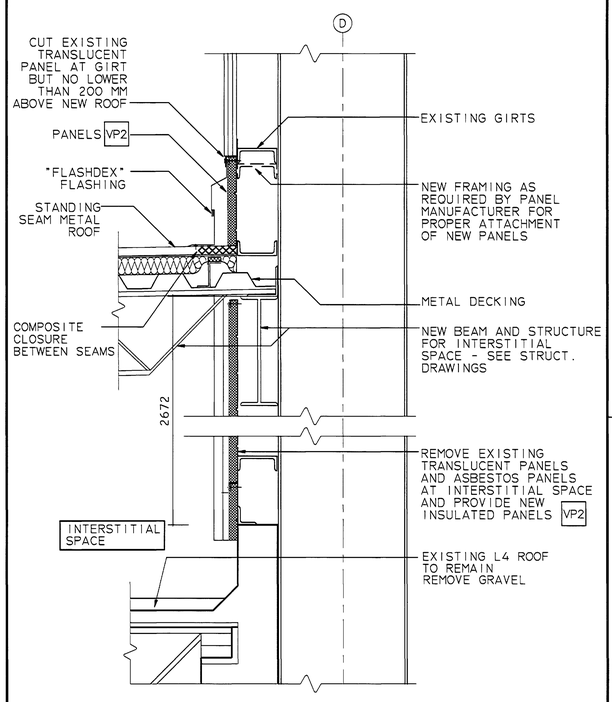

2 A5 ROOF AT LOW/HIGH BAY

1:10

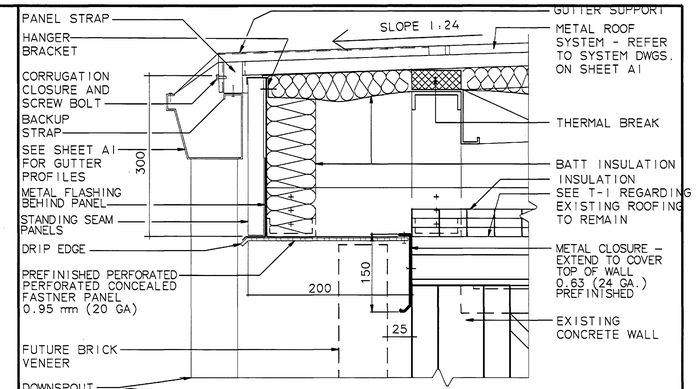

5 A5 ROOF EDGE AT LOW BAY

1:10

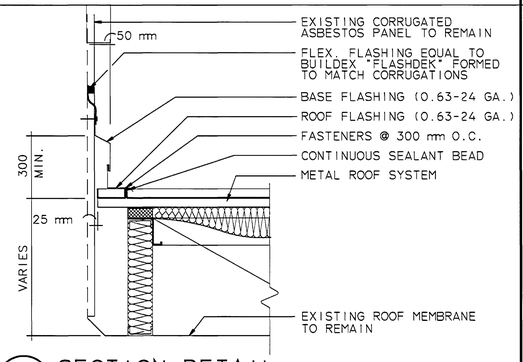

4 A5 SECTION DETAIL

1:10

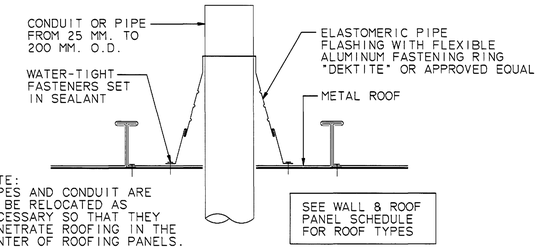

NOTE:
PIPES AND CONDUIT ARE TO BE RELOCATED AS NECESSARY SO THAT THEY PENETRATE ROOFING IN THE CENTER OF ROOFING PANELS.

6 A5 TYPICAL SMALL PIPE PENETRATION DETAIL

1:5

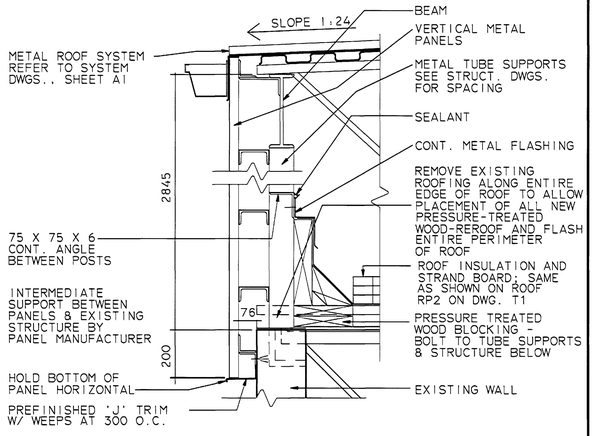

7 A5 ROOF EDGE AT L4

1:10

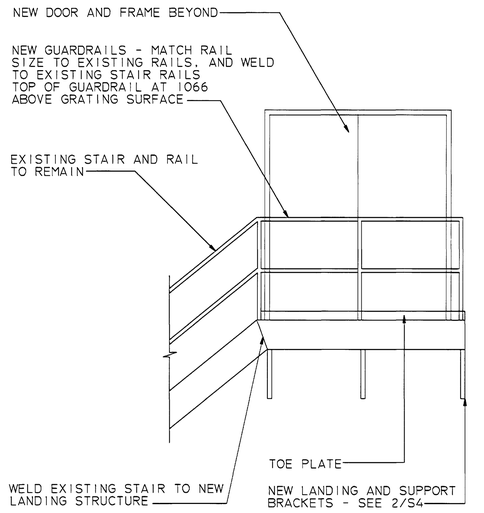

8 A5 ELEV. AT STAIR L4(1)

1:5

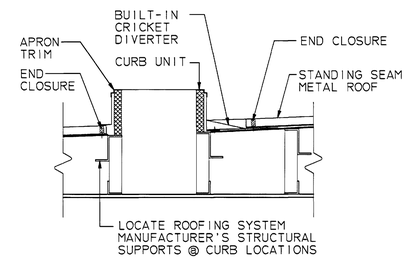

SEE WALL & ROOF PANEL SCHEDULE FOR ROOF TYPES

SECTION A

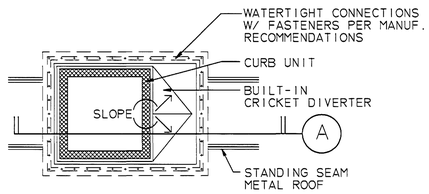

SEE SMACNA MANUAL PLATE 113 FOR TYPICAL PROPORTIONS

PLAN

10 A5 TYPICAL CURB UNIT DETAIL

1:20

NOTE. TYPICAL CURB UNIT DETAIL 10/A5 SHALL BE USED AT ALL ROOFTOP EQUIPMENT THAT IS BEING RAISED. ALL CURB UNITS SHALL BE NEW AND SIZED FOR EQUIPMENT BEING MOVED. SEE MECHANICAL PLANS FOR ROOF EQUIPMENT TO BE MOVED.

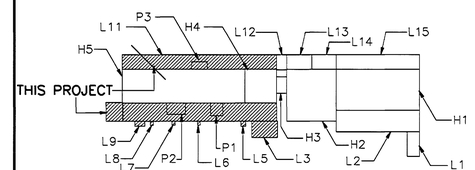

SHEET KEY PLAN ⊕

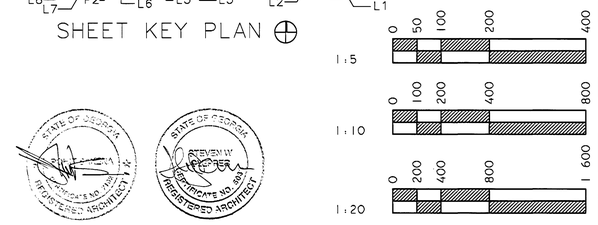

CONCURRENCE. 12/16/97
CONCURRENCE. / / /
CONCURRENCE. / / /
CONCURRENCE. / / /
MAINTENANCE 12/15/97
CONCURRENCE.
USING OFFICE / / /
CONCURRENCE.
ENVIRONMENTAL HEALTH / / /
CONCURRENCE. 12/16/97
SAFETY OFFICE
CONCURRENCE. 12/16/1997
COMMUNICATIONS OFFICE

TELECOMMUNICATIONS EQUIPMENT AFFECTED BY THIS CONTRACT WORK IS NOT TO BE ALTERED OR REMOVED BY THE CONTRACTOR. CONTACT THE COTR IN THE EVENT OF A CONFLICT.

REF. NO.

A5

REV.	BY	DATE	REVISION	C.I. NO.	APPROVED

NASA MARSHALL SPACE FLIGHT CENTER
HUNTSVILLE, ALABAMA 35812

REPAIR NORTHWEST AND SOUTHWEST LOW ROOFS OF STRUCTURES AND DYNAMICS LABORATORY (4619)

ROOF DETAILS - SHEET 2

AE FIRM: TIPPETT CLEPPER ASSOCIATES

NASA AE CONTRACT NO. NASA 8-39884

SUBMITTED.

APPROVAL RECOMMENDED. Michael Kennedy

CHIEF ENGINEERING DIVISION ACCEPTED FOR CONSTRUCTION. APPROVED.

RE. DATE. 10/15/97

AE&I DATE. 12/18/97

AE&I DATE.

DESIGNED BLP
DRAWN DJM
CHECKED RSS
SCALE. VARIES

APPROVAL RECOMMENDED. RA
CHIEF. ARCHITECTURAL BRANCH
DESIGN DATE.
SPEC. NO. M4125

DWG NO
FAC-EB-4619-A5

FILE NAME: M42-JNKG.VMF

MSFC MASTER BID DISK 11-18-2013

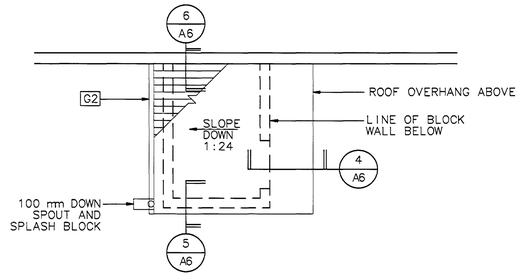

1 A6 ROOF PLAN @ L8 (& L6 REV.)

1:50

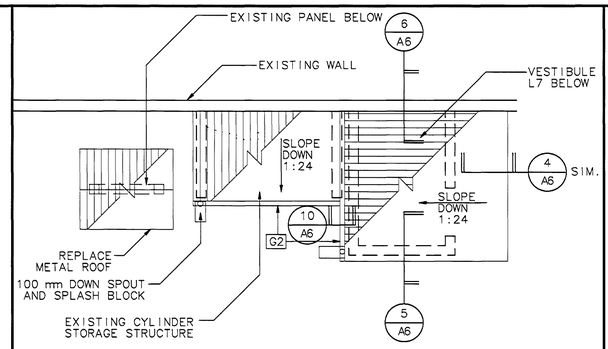

2 A6 ROOF PLAN AT L7

1:50

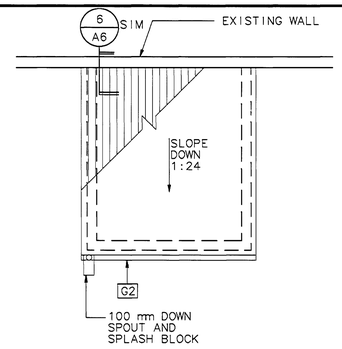

3 A6 ROOF PLAN AT L5

1:50

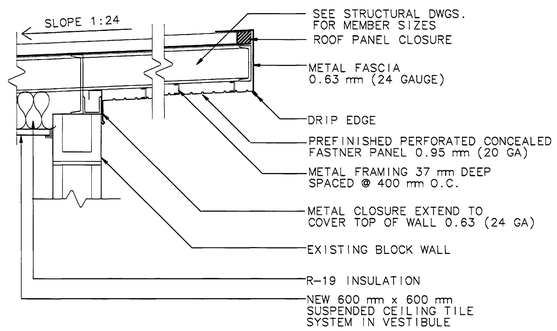

4 A6 DETAIL AT OVERHANG AT ROOFS L8 AND L6

1:10

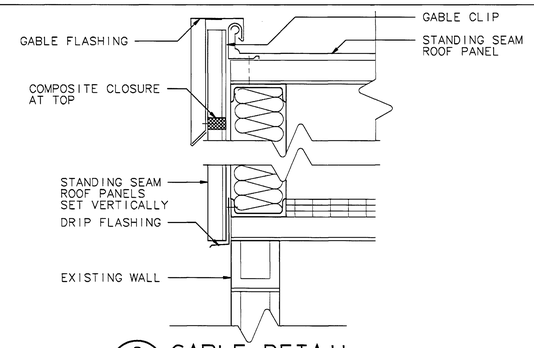

8 A6 GABLE DETAIL

1:5

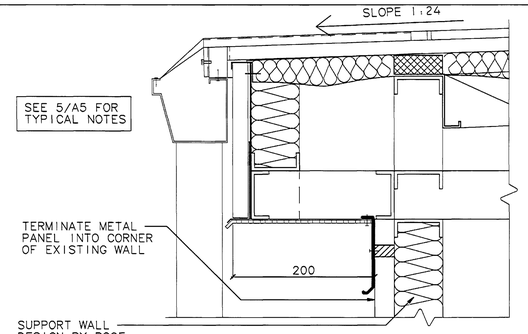

9 A6 ROOF EDGE AT ROOF L3

1:10

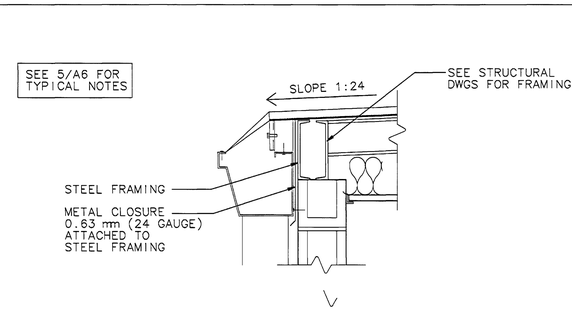

10 A6 GUTTER DETAIL @ L7

1:10

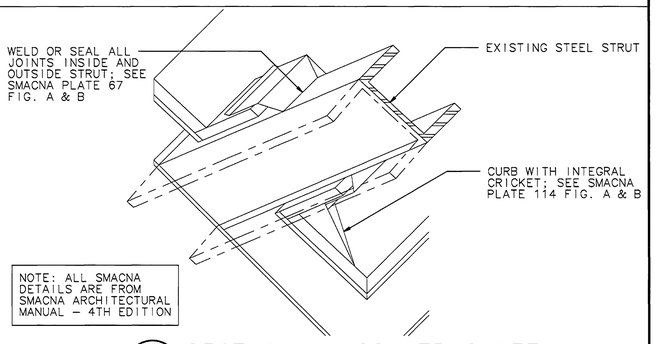

11 A6 SECTIONAL ISOMETRIC DETAIL

1:20

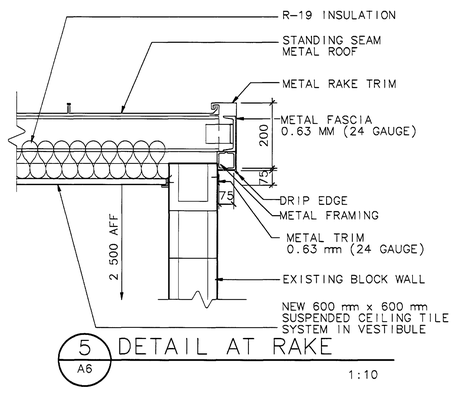

5 A6 DETAIL AT RAKE

1:10

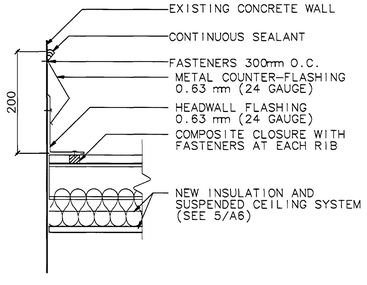

6 A6 DETAIL AT WALL

1:10

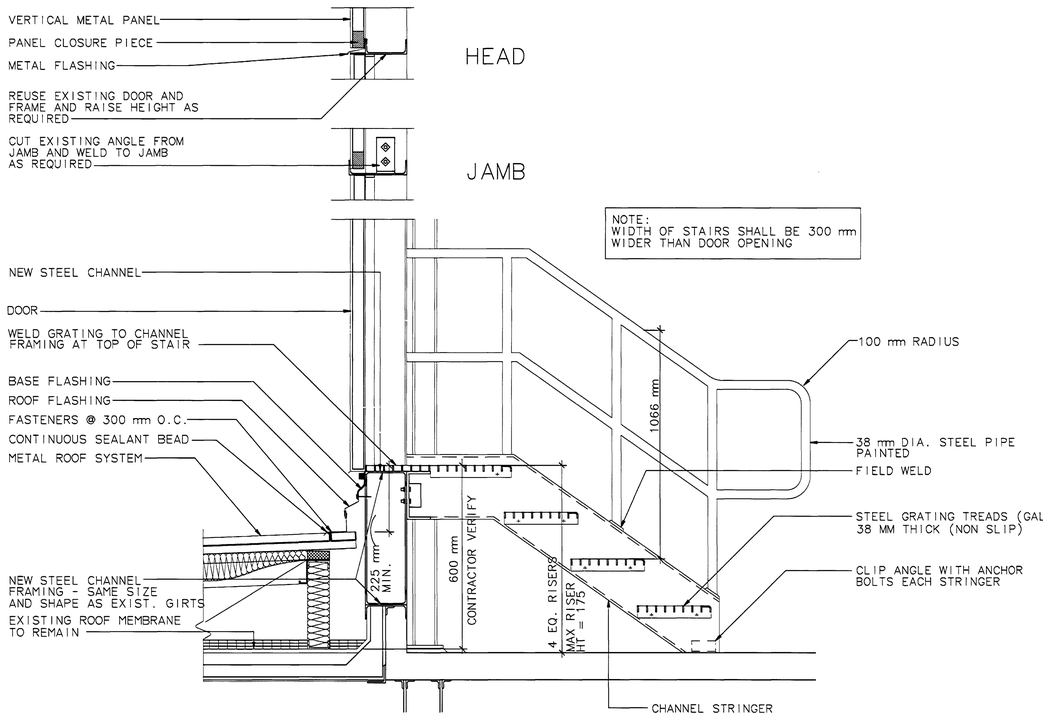

7 A6 DOOR THRESHOLD DETAIL

1:5

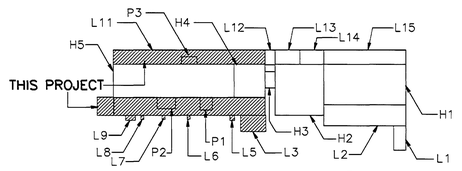

SHEET KEY PLAN ⊕

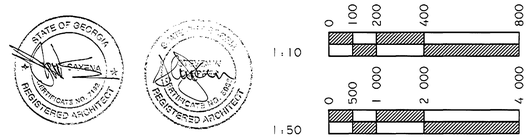

CONCURRENCE:						
CONCURRENCE: R.A.	12/16/97					
CONCURRENCE:	/ / /					
CONCURRENCE:	/ / /					
CONCURRENCE:	/ / /	REV.	BY	DATE	REVISION	C.I. NO.	APPROVED
MAINTENANCE	12/22/97						
CONCURRENCE:	/ / /						
USING OFFICE							
CONCURRENCE:	/ / /						
ENVIRONMENTAL HEALTH							
CONCURRENCE:	12/16/97						
SAFETY OFFICE							
CONCURRENCE:	12/16/97						
COMMUNICATIONS OFFICE							

TELECOMMUNICATIONS EQUIPMENT AFFECTED BY THIS CONTRACT WORK IS NOT TO BE ALTERED OR REMOVED BY THE CONTRACTOR. CONTACT THE COTR IN THE EVENT OF A CONFLICT.

NASA MARSHALL SPACE FLIGHT CENTER
HUNTSVILLE, ALABAMA 35812

REPAIR NORTHWEST AND SOUTHWEST LOW ROOFS OF STRUCTURES AND DYNAMICS LABORATORY (4619)

ROOF DETAILS - SHEET 3

AE FIRM: TIPPETT CLEPPER ASSOCIATES		NASA AE CONTRACT NO. NASA 8-39884
SUBMITTED:	APPROVAL RECOMMENDED: Michael Kennedy	CHIEF ENGINEERING DIVISION ACCEPTED FOR CONSTRUCTION. APPROVED:
RE. DATE: 10/15/97	AD21 DATE: 12/19/97	AD61 DATE:
DESIGNED BLP	APPROVAL RECOMMENDED:	DWG NO
DRAWN DJM	CHIEF, ARCHITECTURAL BRANCH	FAC-EB-4619-A6
CHECKED RSS	DESIGN DATE:	
SCALE: VARIES	SPEC. NO. M4125	

REF. NO.

A6

FILE NAME: M42-INK6.VWF

MSFC MASTER BID DISK 11-18-2013

LIST OF STRUCTURAL ABBREVIATIONS

A	
AB	ANCHOR BOLT
ADDL	ADDITIONAL
ADDN	ADDITION
ADJ	ADJACENT
AFF	ABOVE FINISH FLOOR
ALT	ALTERNATE
APPROX	APPROXIMATELY
ARCH	ARCHITECTURAL, ARCHITECT
@	AT
B	
B-TO-B	BACK-TO-BACK
BLDG	BUILDING
BLK	BLOCK
BM	BEAM
BOT	BOTTOM
BRG	BEARING
BSMT	BASEMENT
BTWN	BETWEEN
C	
CANT	CANTILEVER
CG	CENTER OF GRAVITY
CIP	CAST-IN-PLACE (CONCRETE)
CJ	CONTROL/CONSTRUCTION JOINT
CL	CENTERLINE
CLR	CLEAR
CMU	CONCRETE MASONRY UNIT
COL	COLUMN
CONC	CONCRETE
CONN	CONNECTION
CONST	CONSTRUCTION
CONT	CONTINUOUS
CONTR	CONTRACTOR
COORD	COORDINATE
CTR	CENTER
D	
DB	DECK BEARING ELEVATION
DBA	DEFORMED BAR ANCHOR
DBL	DOUBLE
DEP	DEPRESSED
DET,DTL	DETAIL
DIA	DIAMETER
DIM	DIMENSION
DJ	DOUBLE JOIST
DN	DOWN
DP	DEEP
DT	DOUBLE-TEE (PRECAST)
DWG	DRAWING
DWL	DOWEL
E	
EA	EACH
E.E.	EACH END
E.F.	EACH FACE
E.J.	EXPANSION JOINT
EL	ELEVATION
ELECT	ELECTRICAL
ELEV	ELEVATOR
EMBED	EMBEDMENT
EQ	EQUAL
EQUIP	EQUIPMENT
E.S.	EACH SIDE
E.W.	EACH WAY
EXIST	EXISTING
EXP	EXPANSION
EXT	EXTERIOR
F	
FA	FACE
f'c	MINIMUM 28-DAY COMPRESSIVE STRENGTH OF CONCRETE
FDN	FOUNDATION
F.F.	FAR FACE
FFE	FINISH FLOOR ELEVATION
FIN	FINISH
FLR	FLOOR
f'm	MINIMUM 28-DAY COMPRESSIVE STRENGTH OF MASONRY
FRAM	FRAMING
F.S.	FAR SIDE
FTG	FOOTING
Fy	YIELD STRENGTH OF STEEL
G	
GA	GAGE
GALV	GALVANIZED
GB	GRADE BEAM
GOVT	GOVERNMENT
H	
HCA	HEADED CONCRETE ANCHOR
HK	HOOK
HORIZ	HORIZONTAL
H.S.	HEADED STUD
HT	HEIGHT
I	
I.D.	INSIDE DIAMETER
I.F.	INSIDE FACE
INT	INTERIOR
J	
JB	JOIST BEARING
JT	JOINT
K	
K	KIP (1000 POUNDS)
kg	KILOGRAM
L	
LL	LONG LEG
LLH	LONG LEG HORIZONTAL
LLO	LONG LEG OUT
LLV	LONG LEG VERTICAL
LSH	LONG SIDE HORIZONTAL
LSV	LONG SIDE VERTICAL
LW	LONG WAY
M	
m	METER
MAS,MSRY	MASONRY
MATL	MATERIAL
MAX	MAXIMUM
MECH	MECHANICAL
MFR	MANUFACTURER
MIN	MINIMUM
MISC	MISCELLANEOUS
mm	MILLIMETER
MPa	MEGAPASCAL
N	
N/A	NOT APPLICABLE
NEG	NEGATIVE
NF	NEAR FACE
NIC	NOT IN CONTRACT
NO, #	NUMBER
N.S.	NEAR SIDE
NTS	NOT TO SCALE
O	
OC	ON CENTER (SPACING)
O.D.	OUTSIDE DIAMETER
O.F.	OUTSIDE FACE
OFST	OFFSET
OPH	OPPOSITE HAND
OPNG	OPENING
OPP	OPPOSITE
P	
Pa	PASCAL
PC	PRECAST CONCRETE
PEJ	PREMOLDED EXPANSION JOINT
PL	PLATE
POS	POSITIVE
PT	POST-TENSIONING
PVMT	PAVEMENT
R	
R	RISER
R.BENT	RIGID BENT
RAD	RADIUS
REM	REMAINDER
REBAR	REINFORCING BAR
REINF	REINFORCEMENT
REQD	REQUIRED
RET	RETAINING
RM	ROOM
S	
s	SECOND (TIME UNIT)
SCHED	SCHEDULE
SEC,SECT	SECTION
SF	SQUARE FOOT
SH,SHT	SHEET
SIM	SIMILAR
SJI	STEEL JOIST INSTITUTE
SLO	SHORT LEG OUT
SLV	SHORT LEG VERTICAL
SOG	SLAB ON GRADE
SP,SPAC	SPACING
SPECS	SPECIFICATIONS
SQ	SQUARE
SSH	SHORT SIDE HORIZONTAL
SSV	SHORT SIDE VERTICAL
ST	STAIR
STD	STANDARD
STIFF	STIFFENER
STL	STEEL
STRUC	STRUCTURAL
SUPT	SUPPORT
SW	SHORT WAY
T	
TD	TURNDOWN
TS	THICKENED SLAB
TYP	TYPICAL
T&B	TOP AND BOTTOM
T/	TOP OF
T/B	TOP OF BEAM
T/C	TOP OF CONCRETE
T/EF	TOP OF EXISTING FOOTING
T/F	TOP OF FOOTING
T/S	TOP OF STEEL
T/W	TOP OF WALL
U	
U.N.O.	UNLESS NOTED OTHERWISE
V	
VERT	VERTICAL
W	
WD	WOOD
WT	WEIGHT
WWF	WELDED WIRE FABRIC
WWM	WELDED WIRE MESH
W/	WITH
W/O	WITHOUT

GENERAL NOTES

GENERAL

1. NO WORK SHALL START IN THE FIELD BEFORE THE CONTRACTING OFFICER HAS REVIEWED THE SHOP DRAWINGS AND ALL CORRECTIONS HAVE BEEN MADE TO THEM.
2. THE CONTRACTOR SHALL BE RESPONSIBLE FOR BRACING AND SHORING OF ALL WORK DURING CONSTRUCTION.
3. THE EXISTING STRUCTURE AS SHOWN ON THESE DRAWINGS IS NOT INTENDED TO REPRESENT THE COMPLETE IN PLACE STRUCTURE. THE CONTRACTOR SHALL FIELD VERIFY ALL DIMENSIONS, MEMBER SIZES AND CONDITIONS PERTAINING TO THE EXISTING STRUCTURE PRIOR TO COMMENCING WORK. SUBMIT VARIATIONS TO THE CONTRACTING OFFICER FOR REVIEW.

FOUNDATIONS

1. FOOTINGS HAVE BEEN DESIGNED FOR AN ALLOWABLE SOIL BEARING CAPACITY OF 144 kPa. ALL FOUNDATION EXCAVATIONS SHALL BE INSPECTED AND APPROVED FOR THE DESIGN CAPACITY BY A QUALIFIED SOILS ENGINEER. IF JOBSITE CONDITIONS DICTATE THE USE OF A DIFFERENT BEARING CAPACITY, CONTACT THE CONTRACTING OFFICER FOR ADDITIONAL INSTRUCTIONS.
2. AT ALL TURNS IN WALL FOOTINGS, PROVIDE CORNER BARS THE SAME SIZE AND QUANTITY AS CONTINUOUS REINFORCEMENT. LEG LENGTHS SHALL BE CLASS "B" TENSION LAPS MIN.

CONCRETE

1. APPLICABLE CODES AND STANDARDS FOR CONCRETE SHALL BE ACI PUBLICATIONS 301-89, 318M-89, 347R-88 AND SP-15(89).
2. CONCRETE MIX DESIGN, CONCRETE PLACEMENT AND REINFORCING STEEL PLACEMENT SHALL BE IN ACCORDANCE WITH ACI 318M AND ACI 301.
3. CONCRETE SHALL BE NORMAL WEIGHT (7 000 Pa) USING TYPE 1 PORTLAND CEMENT, 25mm MAX COARSE AGGREGATE AND ALL OTHER NECESSARY MATERIALS TO PROVIDE A 100mm +/- 25mm SLUMP CONCRETE WITH A 28-DAY COMPRESSIVE STRENGTH OF 21 MPa.
4. REINFORCING STEEL SHALL BE ASTM A615, GRADE 60. WELDED WIRE MESH SHALL BE ASTM A185 AND SHALL BE FURNISHED IN FLAT SHEETS. ALL LAP SPLICES SHALL BE CLASS "B" TENSION LAP SPLICES UNLESS NOTED OTHERWISE. MESH SHALL BE LAPPED TWO FULL PANELS AND TIED. ALL HOOKS SHALL BE STANDARD HOOKS UNLESS NOTED OTHERWISE. TIES & STIRRUPS SHALL HAVE 135 DEGREE HOOKS UNLESS NOTED OTHERWISE.
5. CONCRETE PROTECTION OF REINFORCEMENT SHALL BE IN ACCORDANCE WITH ACI 318M SECTION 7.7 UNLESS SHOWN OTHERWISE.
6. NO ALUMINUM MATERIAL SHALL BE EMBEDDED IN OR USED IN THE PLACEMENT OF CONCRETE.
7. HEADED CONCRETE ANCHORS SHALL CONFORM TO ASTM A108 AND SHALL HAVE A YIELD STRENGTH OF 340 MPa. DEFORMED BAR ANCHORS SHALL CONFORM TO ASTM A496 AND SHALL HAVE A YIELD STRENGTH OF 480 MPa. ANCHORS CHALL BE FLUX-ENDED AND SHALL BE END-WELDED WITH STUD WELDING EQUIPMENT. DEFORMED BARS TO BE WELDED OTHER THAN AS NOTED ABOVE SHALL CONFORM TO ASTM A706 AND SHALL HAVE A YIELD STRENGTH OF 410 MPa.
8. WHERE NEW CONCRETE IS TO BE POURED ONTO EXISTING CONCRETE, HIGH-PRESSURE WASH THE EXISTING ADJOINING AREAS AND COAT WITH A BONDING AGENT PER THE MANUFACTURER'S RECOMMENDATIONS.

RETRO-FIT METAL ROOF AND WALL SYSTEMS

1. THE RETRO-FIT METAL ROOFING SYSTEM SHALL CONSIST OF ALL MATERIALS NECESSARY TO INSTALL A SLOPED STANDING SEAM METAL ROOF OVER AN EXISTING ROOF. NECESSARY ITEMS INCLUDE, BUT ARE NOT LIMITED TO STANDING SEAM METAL ROOFING PANELS, LIGHT GAUGE STEEL PURLINS AND/OR SUBPURLINS, LIGHT GAUGE STEEL COLUMNS (POSTS), BEARING PLATES OR CHANNELS, CONNECTIONS TO THE EXISTING STRUCTURE AND ALL NECESSARY CONNECTIONS BETWEEN MEMBERS.
2. THE METAL WALL SYSTEM SHALL CONSIST OF ALL MATERIALS NECESSARY TO INSTALL METAL WALL PANELS ON THE NEW GIRTS. NECESSARY ITEMS INCLUDE BUT ARE NOT LIMITED TO METAL WALL PANELS, VERTICAL MEMBERS PER THESE NOTES, CONNECTIONS TO THE EXISTING STRUCTURE, AND ALL NECESSARY CONNECTIONS BETWEEN MEMBERS
3. THE ENTIRE ROOF AND WALL PANEL SYSTEM SHALL BE FROM A SINGLE ROOFING AND WALL MANUFACTURER AND THAT SUPPLIER SHALL SUBMIT CALCULATIONS, FABRICATION DRAWINGS AND ERECTION DRAWINGS STAMPED BY A REGISTERED PROFESSIONAL ENGINEER. (ALL DRAWINGS AND CALCULATIONS SHALL BE IN METRIC UNITS.)
4. PRIOR TO FABRICATION, THE RETRO-FIT METAL ROOF AND WALL MANUFACTURER SHALL PROVIDE THE FOLLOWING TO THE GOVERNMENT FOR REVIEW AND APPROVAL:
   CERTIFICATION THAT THE RETRO-FIT METAL ROOFING SYSTEM PROPOSED FOR THIS PROJECT WILL MEET ALL REQUIREMENTS OF THE U.L. CLASS 90 UPLIFT RATING.
   RETRO-FIT METAL ROOF CALCULATIONS, FABRICATION AND ERECTION DRAWINGS (INCLUDING CONNECTIONS) SEALED BY A REGISTERED ENGINEER.
5. RETRO-FIT METAL ROOF MANUFACTURER SHALL BE RESPONSIBLE FOR ALL FRAMING ABOVE THE EXISTING ROOF INCLUDING ALL ATTACHMENT TO THE EXISTING ROOF STRUCTURE.

STRUCTURAL STEEL & TRUSSES

1. ALL STRUCTURAL STEEL, WHERE DESIGNS ARE SHOWN, SHALL BE ASTM A36M, EXCEPT STEEL TUBES WHICH SHALL BE ASTM A500, GRADE B, Fy = 320 MPa. WHERE DESIGNS ARE BY THE CONTRACTOR'S ENGINEER, STEEL 3.2mm OR MORE IN THICKNESS SHALL CONFORM TO ASTM A36M, ASTM A529M, ASTM A572M, OR ASTM A588M. UNCOATED STEEL LESS THAN 3.2mm IN THICKNESS SHALL CONFORM TO ASTM A570M, ASTM A606, OR ASTM A607.
2. STRUCTURAL STEEL CONNECTIONS SHOWN ON THESE DRAWINGS SHALL BE AS DETAILED. CONNECTIONS NOT COMPLETELY DETAILED ON THESE DRAWINGS SHALL BE DESIGNED & DETAILED UNDER THE DIRECT SUPERVISION OF A REGISTERED PROFESSIONAL ENGINEER EMPLOYED BY THE CONTRACTOR TO CONFORM WITH THE AISC MANUAL OF STEEL CONSTRUCTION AND THE AISI COLD-FORMED STEEL DESIGN MANUAL. HIGH-STRENGTH BOLTING SHALL CONFORM TO ASTM A325M OR ASTM A490M. ALL CONNECTION MATERIAL SHALL BE INCLUDED WITH THE STRUCTURAL STEEL SHOWN AND SHALL BE SUPPLIED BY THE CONTRACTOR.
3. PRE-ENGINEERED ANALYSIS AND DESIGN BY THE CONTRACTOR'S ENGINEER SHALL INCLUDE THE FINAL DESIGN AND DETAILS OF CONSTRUCTION FOR EACH SUPERSTRUCTURE AND ITS FOUNDATIONS FOR ALL LOADING CONDITIONS.
4. STRUCTURAL STEEL STAIRS SHALL BE DESIGNED AND DETAILED UNDER THE DIRECT SUPERVISION OF A REGISTERED ENGINEER EMPLOYED BY THE CONTRACTOR. SUBMIT FINAL DESIGN CALCULATIONS TO THE CONTRACTING OFFICER FOR REVIEW.
5. ALL WELDING SHALL BE IN ACCORDANCE WITH THE AWS D1.1 STRUCTURAL WELDING CODE, AND BE PERFORMED BY CERTIFIED WELDERS.
6. ALL FILLET WELDS SHALL BE VISUALLY INSPECTED FOR COMPLIANCE WITH AWS D1.1 BY A QUALIFIED STRUCTURAL ENGINEER TO BE SELECTED BY THE CONTRACTING OFFICER.
7. STEEL JOISTS SHALL BE OPEN WEB MEMBERS MEETING THE LATEST REQUIREMENTS OF THE STANDARD SPECIFICATIONS AND LOAD TABLES PUBLISHED BY THE STEEL JOIST INSTITUTE. JOIST SIZES ARE FROM THE SJI TABLES BUT THE FINAL JOIST DESIGNS BY THE CONTRACTOR'S ENGINEER SHALL INCLUDE CHECKS FOR ALL CONCENTRATED LOADS AND FOR A NET UPLIFT OF 750 Pa. SUBMIT FINAL DESIGN CALCULATIONS TO THE CONTRACTING OFFICER FOR REVIEW. SEE 14/S3 FOR JOIST REINFORCEMENT FOR CONCENTRATED LOADS IN EXCESS OF 900N NOT AT A JOIST PANEL POINT.
8. ROOF DECK SHALL BE 38mm DEEP, 0.75mm THICK(22 GAGE), TYPE B (WIDE RIB) GALVANIZED STEEL DECK AND SHALL HAVE THE FOLLOWING MINIMUM SECTION PROPERTIES PER FOOT WIDTH:
   I = 70 300 mm4 S = 3 040 mm3
9. METAL DECKING SHALL BE FASTENED TO STRUCTURAL SUPPORTS IN ACCORDANCE WITH THE MANUFACTURER'S RECOMMENDATIONS FOR DIAPHRAGM ACTION TO RESIST WIND LOADS BUT NOT LESS THAN SHOWN ON THESE DRAWINGS OR IN THE SPECIFICATIONS. USE EITHER SPECIAL SCREW FASTENERS OR PLUG WELDS THROUGH HEX OR SLOTTED WELD WASHERS. SIDE LAP CONNECTORS SHALL BE SPECIAL SIDE LAP STITCH SCREW FASTENERS.
10. ALL COLD-FORMED METAL FRAMING SHALL CONFORM TO THE REQUIREMENTS OF THE COLD-FORMED STEEL DESIGN MANUAL OF THE AMERICAN IRON AND STEEL INSTITUTE. THE CONTRACTOR SHALL SUBMIT SHOP DRAWINGS SHOWING ALL MEMBER THICKNESSES, SPACINGS, SIZES, AND CONNECTION DETAILS FOR REVIEW PRIOR TO FABRICATION.
11. EXPANSION BOLTS SHALL BE OF CARBON STEEL AND SHALL HAVE THE FOLLOWING ALLOWABLE LOADS AND EMBEDMENTS U.N.O.:

	EMBEDMENT	ALLOWABLE TENSILE	ALLOWABLE SHEAR
M16	100mm	12.6kN	17.0kN
M20	120mm	18.3kN	22.7kN

DESIGN LOAD DATA

1. THE GOVERNING BUILDING CODE SHALL BE THE 1991 UNIFORM BUILDING CODE, WITH THE FOLLOWING PARAMETERS:
   DESIGN LIVE LOADS:
   SLABS-ON-GRADE--5 kPa
   ROOF---1 kPa
2. WIND LOADS SHALL BE DESIGNED ACCORDING TO ASCE-7-88, "MINIMUM DESIGN LOADS FOR BUILDINGS AND OTHER STRUCTURES."
   WIND LOADS:
   BASIC WIND VELOCITY---33.5 m/s
   (50-YEAR MEAN RECURRENCE INTERVAL)
   ROOF DIAPHRAM SHEAR STRENGTH ---------------------------- 3.8 kN/m
3. SEISMIC DESIGN SHALL BE DESIGNED ACCORDING TO THE UNIFORM BUILDING CODE.
   SEISMIC:---ZONE 1

VERIFICATION OF EXISTING CONDITIONS

THE STRUCTURAL DESIGN FOR THE MODIFICATIONS AND ALTERATIONS SHOWN ON THESE CONTRACT DRAWINGS ARE BASED UPON OUR KNOWLEDGE OF THE EXISTING BUILDING. THIS INCLUDES: THE ORIGINAL DRAWINGS TITLED "STRUCTURES AND MECHANICS BUILDING" PREPARED BY THE RALPH M. PARSONS COMPANY DATED OCTOBER 1956 (SHEETS S-1 THRU S-22); THE ADDITION DRAWINGS TITLED "ADDITION TO STRUCTURES & MECHANICS BLDG 4619" DATED MAY, 1960 (SHEETS S-1 AND S-2); THE ADDITION DRAWINGS TITLED "ADDITION TO BUILDING 4619 - LOAD TEST ANNEX" PREPARED BY VITRO ENGINEERING COMPANY DATED MAY 18, 1962 (SHEETS S-1 THRU S-18); THE ADDITION DRAWINGS TITLED "BLDG 4619-ROOM 159" DATED 7-22-62 (SHEET A1); THE ADDITION DRAWINGS TITLED "BLDG 4619 TEST FIXTURE PREPARATION ROOM" DATED 3-26-64 (SHEETS S1 THRU S3); THE ADDITION DRAWINGS TITLED "EXTENSION OF LOAD TEST ANNEX (BUILDING 4619) PREPARED BY SANDERS & THOMAS INC. DATED 12 MAY 64 (SHEETS S1 THRU S20); THE ADDITION DRAWINGS TITLED "BLDG 4619 TOILET & LOCKER ROOM FACILITIES ADDITION" DATED 7-14-64; THE ADDITION DRAWINGS TITLED "EXTENSION OF LOAD TEST ANNEX (BUILDING NO. 4619)" PREPARED BY SANDERS & THOMAS INC. DATED 12 NOV 1965 (SHEETS S1 TO S2) EXCEPT AS MAY BE NOTED ON THESE CONTRACT DOCUMENTS, JACK LYNCH & ASSOCIATES, INC. HAS NO FURTHER KNOWLEDGE OF THE EXISTING CONDITIONS.

ROOF AND WALL PANEL INSTALLATION NOTES AND LIMITATIONS

THE GROSS UNIT WEIGHT OF THE NEW ROOFING SYSTEM SHALL NOT EXCEED 450 Pa.

THE NEW FRAMING SYSTEM TO SUPPORT THE NEW METAL ROOF SHALL BE FRAMED SO AS TO LOAD THE EXISTING STRUCTURE IN A UNIFORM AND SYMMETRIC MANNER.

IN NO CASE SHALL THE TRIBUTARY AREA OF A ROOF BEAM AFTER THE NEW ROOF FRAMING IS IN PLACE EXCEED THE TRIBUTARY AREA OF THAT BEAM AS ORIGINALLY BUILT. (THE TRIBUTARY AREA OF A BEAM IS DEFINED AS THE AREA OBTAINED BY MULTIPLYING THE SPAN OF THAT MEMBER BY THE SUM OF HALF OF THE DISTANCE TO THE NEXT MEMBER TO EITHER SIDE OF THE MEMBER IN QUESTION.

A NEW SPREADER BEAM (TO BE SIZED BY CONTRACTOR) SHALL RUN PARALLEL TO AND ABOVE EACH EXISTING ROOF BEAM OR JOIST AND SHALL BE ATTACHED TO THE ROOF DECK. THE NEW POSTS TO SUPPORT THE LIGHT GAUGE ROOF SYSTEM SHALL BE POSITIVELY ATTACHED TO THE SPREADER BEAM. MAXIMUM SPACING FOR POSTS ALONG THE BEAM LENGTH SHALL BE 2 000mm. (SEE 8/S6 AND 12/S6)

THE MAXIMUM ALLOWABLE TRIBUTARY AREA PER POST ABOVE ROOF BEAMS SHALL BE 4.6m² THE MAXIMUM ALLOWABLE TRIBUTARY AREA PER POST ABOVE JOISTS SHALL BE 1.7m² UNLESS A NEW ANGLE BRACE IS INSTALLED TO THE JOIST AT THE POST LOCATION AS PER 14/S3. WHERE THE NEW BRACE IS ADDED, THE MAXIMUM ALLOWABLE AREA PER POST SHALL BE 4.6m² NO BEAM SHALL CARRY MORE THAN 4 OF THESE POINT LOADS.

IN NO CASE SHALL CONCENTRATED LOADS BE ALLOWED ON THE EXISTING ROOF DECK AWAY FROM THE NEW SPREADER BEAMS INSTALLED ABOVE THE EXISTING ROOF BEAMS.

THE NEW RETRO-FIT ROOF AND WALL SYSTEMS SHALL BE DESIGNED FOR THE ALLOWABLE WIND PRESSURES AS SHOWN AT 10/S6.

LEGEND OF SYMBOLS:

XXX — BUILDING SEGMENT IDENTIFICATION

NORTH ARROW

X — INDICATES SECTION NUMBER
SECTION REFERENCE
SXX — INDICATES SHEET NUMBER ON WHICH SECTION IS DRAWN

NEW MEMBERS ARE LABELED WITH METRIC DESIGNATIONS

EXISTING MEMBERS ARE LABELED WITH ENGLISH DESIGNATIONS

BUILDING ELEVATIONS AND ROOF PLANS REFLECT EXISTING STRUCTURAL MEMBERS AND NEW CONSTRUCTION. WHERE NEW AND EXISTING MEMBERS OCCUR TOGETHER, THE NEW MEMBERS WILL APPEAR WITH A THICKER LINE WEIGHT. REFER TO MECH ELEVATIONS FOR LOCATIONS OF NEW VENT OPENINGS TO BE FRAMED AND EXISTING OPENINGS TO BE ABANDONED. VERTICAL GIRT MEMBERS FRAMING AROUND EXISTING VENTS TO BE ABONDONED MAY BE REMOVED OR LEFT INTACT AT CONTRACTORS DISCRESION.

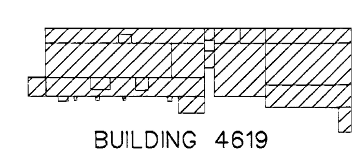

KEY PLAN

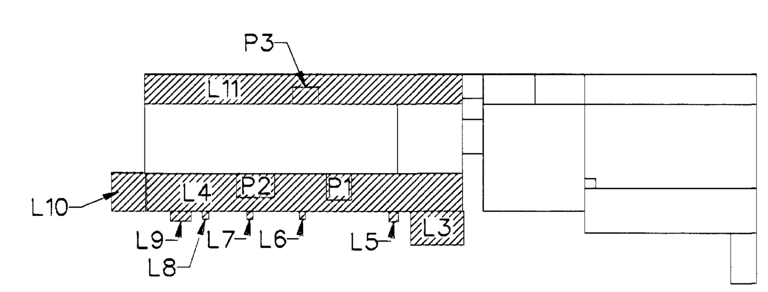

SHEET KEY PLAN

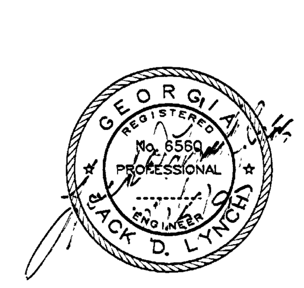

CONCURRENCE: R. Al 12/16/97
CONCURRENCE:
CONCURRENCE:
CONCURRENCE: MAINTENANCE 12/22/97
CONCURRENCE: USING OFFICE
CONCURRENCE: ENVIRONMENTAL HEALTH
CONCURRENCE: SAFETY OFFICE 12/16/97
CONCURRENCE: COMMUNICATIONS OFFICE 12/16/97

TELECOMMUNICATIONS EQUIPMENT AFFECTED BY THIS CONTRACT WORK IS NOT TO BE ALTERED OR REMOVED BY THE CONTRACTOR. CONTACT THE COTR IN THE EVENT OF A CONFLICT.

REV.	BY	DATE	REVISION	C.I. NO.	APPROVED

NASA MARSHALL SPACE FLIGHT CENTER
HUNTSVILLE, ALABAMA 35812

REPAIR NORTHWEST AND SOUTHWEST LOW ROOFS OF STRUCTURES & DYNAMICS LABORATORY (4619)

GENERAL NOTES, ABBREVIATIONS

AE FIRM: TIPPETT CLEPPER ASSOCIATES

NASA AE CONTRACT NO. NASA 8-39884

SUBMITTED:
APPROVAL RECOMMENDED: (signature)
CHIEF ENGINEERING DIVISION

REF. NO. S1

RE: DATE: 10/15/97
AB21 DATE: 12/18/97
AB41 DATE:

DESIGNED JF
DRAWN JF
CHECKED JL
SCALE: NONE

APPROVAL RECOMMENDED: LWG
CHIEF: CIVIL/STRUCTURAL BRANCH
DESIGN DATE:
SPEC. NO. M4125

DWG NO FAC-EB-4619-S1

MSFC MASTER BID DISK 11-18-2013

THE PLANS ON THIS SHEET REFLECT THE EXISTING STRUCTURAL MEMBERS TO THE BEST OF THE KNOWLEDGE OF JACK LYNCH AND ASSOCIATES. THESE PLANS ARE FOR REFERENCE ONLY AND DO NOT INDICATE NEW CONSTRUCTION OR WORK TO BE DONE UNDER THIS CONTRACT.

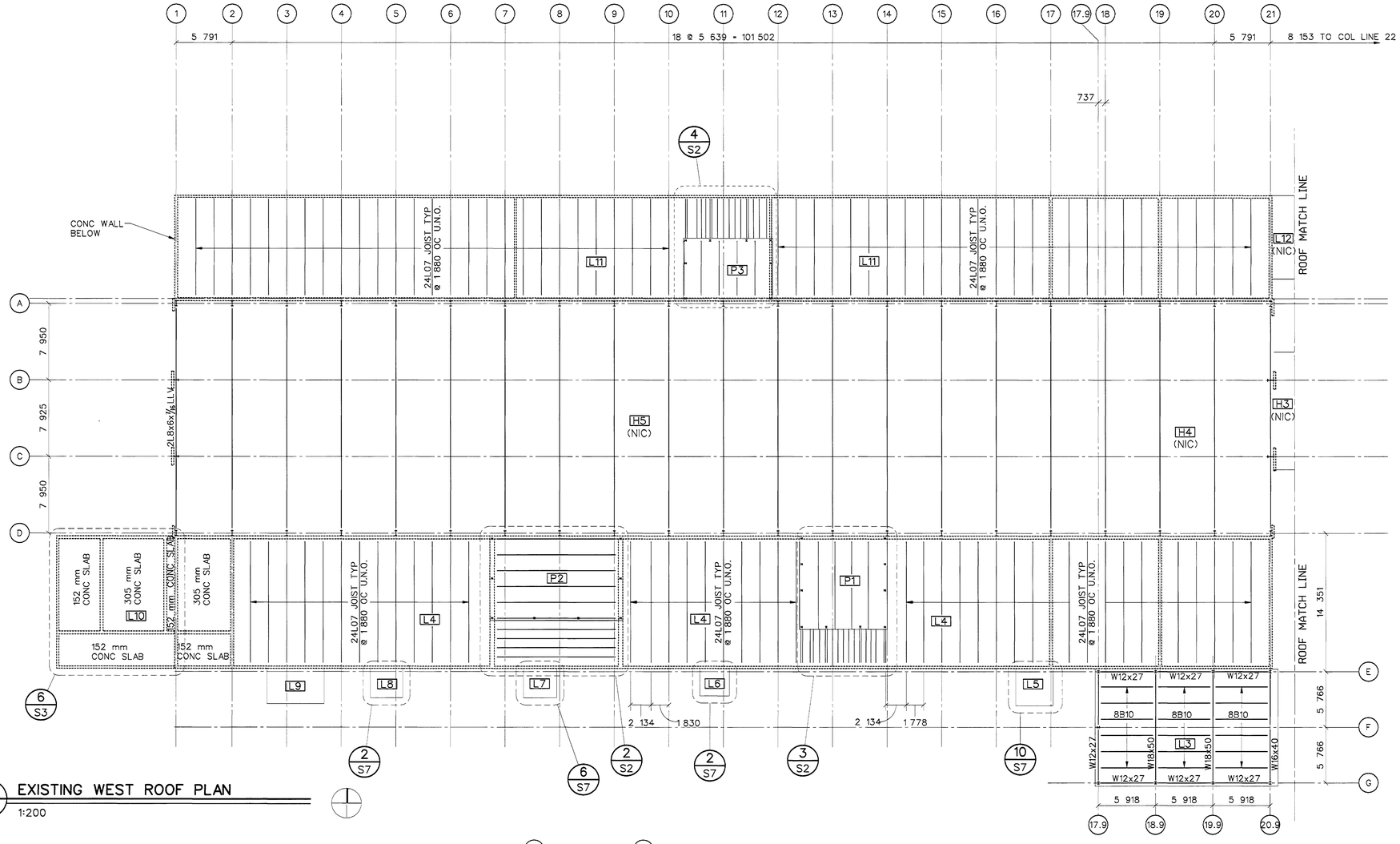

1 S2 EXISTING WEST ROOF PLAN

1:200

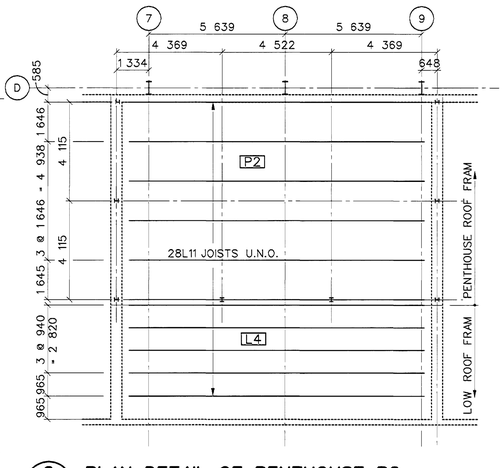

2 S2 PLAN DETAIL OF PENTHOUSE P2

1:100

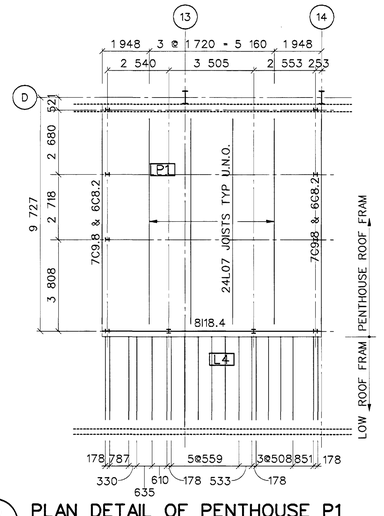

3 S2 PLAN DETAIL OF PENTHOUSE P1

1:100

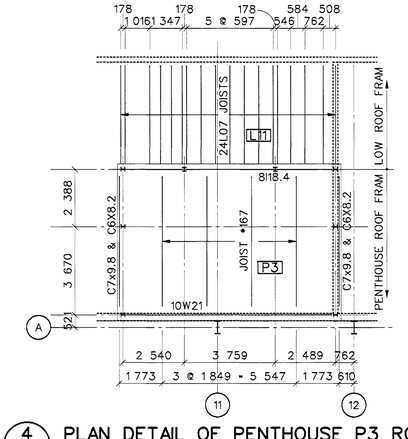

4 S2 PLAN DETAIL OF PENTHOUSE P3 ROOF

1:100

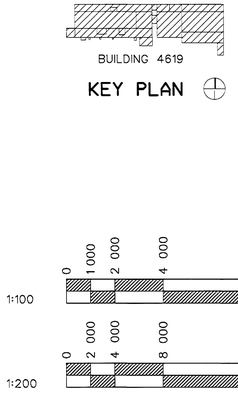

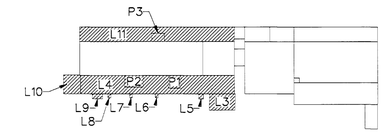

SHEET KEY PLAN

CONCURRENCE: R.A. 12/16/97
CONCURRENCE:
CONCURRENCE:
CONCURRENCE: MAINTENANCE 12/22/97
CONCURRENCE: USING OFFICE
CONCURRENCE: ENVIRONMENTAL HEALTH
CONCURRENCE: SAFETY OFFICE 12/16/97
CONCURRENCE: COMMUNICATIONS OFFICE 12/16/97

TELECOMMUNICATIONS EQUIPMENT AFFECTED BY THIS CONTRACT WORK IS NOT TO BE ALTERED OR REMOVED BY THE CONTRACTOR CONTACT THE COTR IN THE EVENT OF A CONFLICT.

REV.	BY	DATE	REVISION	C.I. NO.	APPROVED

NASA MARSHALL SPACE FLIGHT CENTER
HUNTSVILLE, ALABAMA 35812

REPAIR NORTHWEST AND SOUTHWEST LOW ROOFS OF STRUCTURES & DYNAMICS LABORATORY (4619)

PARTIAL ROOF PLAN - WEST

AE FIRM: TIPPETT CLEPPER ASSOCIATES
NASA AE CONTRACT NO. NASA 8-39884

SUBMITTED:
APPROVAL RECOMMENDED: Michael Reynolds
CHIEF ENGINEERING DIVISION

REF. NO.
RE: DATE: 10/15/97
AB2: DATE: 12/18/97
AB4: DATE:

DESIGNED JF
DRAWN JF
CHECKED JL
APPROVAL RECOMMENDED: LWG
CHIEF: CIVIL/STRUCTURAL BRANCH
DESIGN DATE:
SCALE: AS NOTED
SPEC. NO. M4125

S2

DWG NO FAC-EB-4619-S2

MSFC MASTER BID DISK 11-18-2013

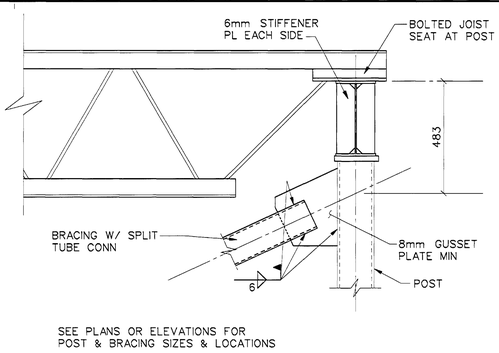

16 S3 BRACING ELEVATION DETAIL

NO SCALE

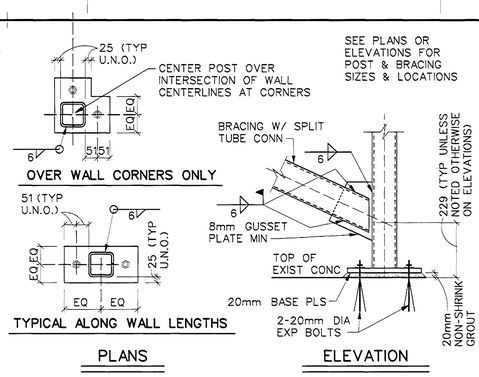

12 S3 POST BASE PLATE DETAILS

1:10

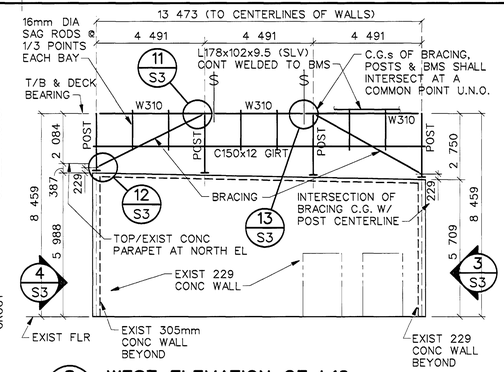

8 S3 WEST ELEVATION OF L10

1:100

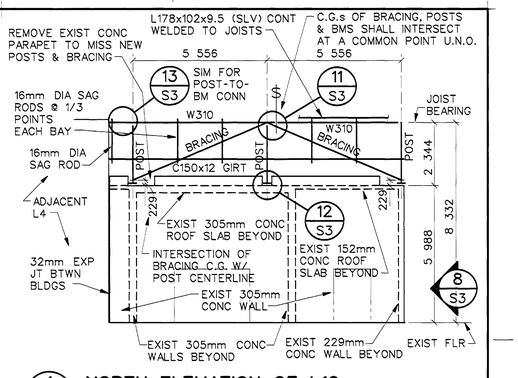

4 S3 NORTH ELEVATION OF L10

1:100

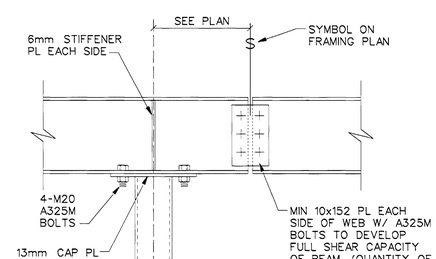

15 S3 ROOF OPENING DETAIL

NO SCALE

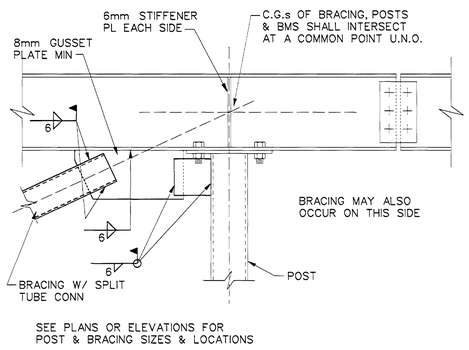

11 S3 BRACING ELEVATION DETAIL

NO SCALE

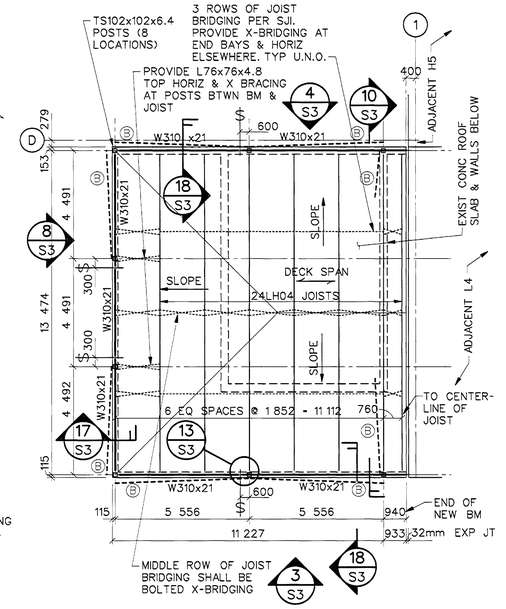

1. POSTS SHALL BE CENTERED OVER EXIST CONC WALLS
2. BRACING SHALL ALIGN W/ POST CENTERLINES
3. Ⓑ INDICATES LOCATIONS OF TS127x76x6.4 BRACING
4. ALL BRACING SHALL HAVE LONG SIDES VERT
5. POST BASE PLATE DETAILS SHOWN IN 12 S3
6. ROOF SLOPE MAY ACHIEVED BY BUILT UP FRAMING OR BY SLOPING THE JOISTS AT CONTRs DISCRETION. THERE WILL BE NO ADD OR SUBTRACT REGARDLESS OF WHICH METHOD IS USED.

6 S3 "ATTIC" FRAMING PLAN FOR L10

1:100

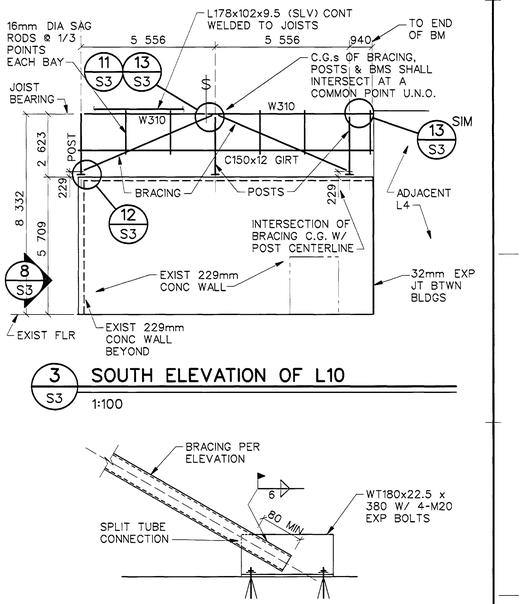

3 S3 SOUTH ELEVATION OF L10

1:100

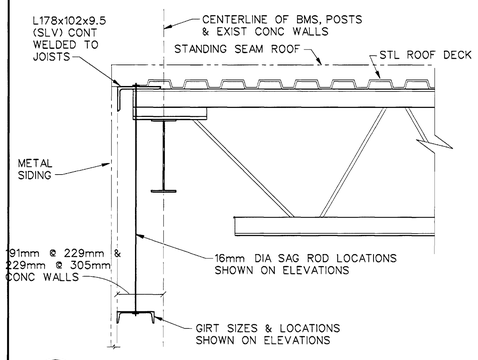

18 S3 SECTION OF L4 & L10 ROOFS

1:10

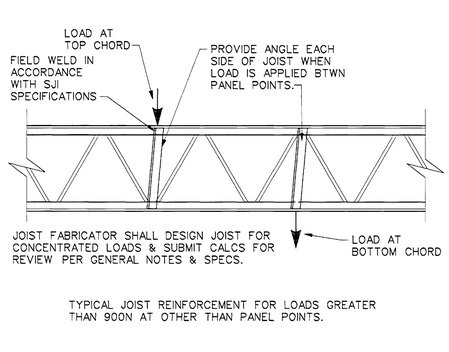

14 S3 CONCENTRATED LOAD ON JOIST

NO SCALE

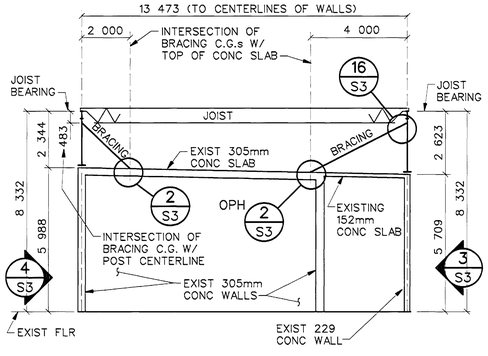

10 S3 SECTION OF L10 AT INTERIOR WALL

1:100

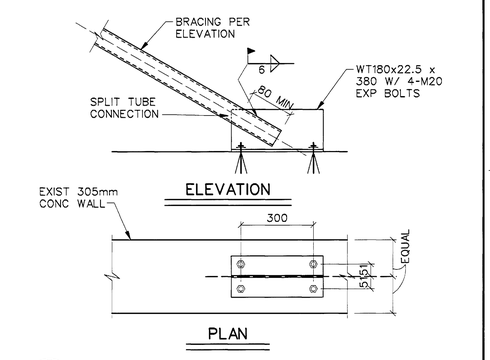

2 S3 BRACING TO WALL CONNECTION

1:10

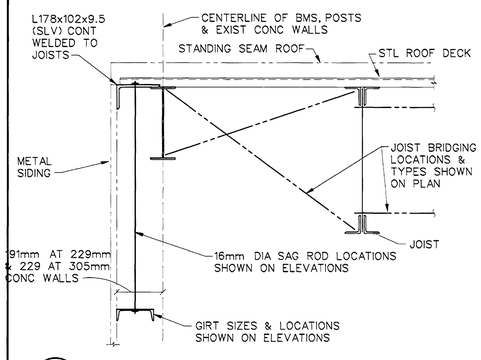

17 S3 SECTION OF L10 ROOF

1:10

13 S3 BEAM SHEAR SPLICE DETAIL

NO SCALE

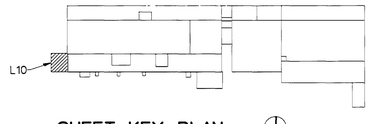

SHEET KEY PLAN

KEY PLAN

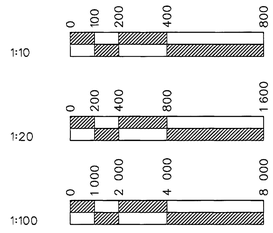

CONCURRENCE:					
CONCURRENCE:					
CONCURRENCE:					
CONCURRENCE: MAINTENANCE					
CONCURRENCE: USING OFFICE					
CONCURRENCE: ENVIRONMENTAL HEALTH & SAFETY OFFICE					
CONCURRENCE: COMMUNICATIONS OFFICE					
REV.	BY	DATE	REVISION	C.I. NO.	APPROVED

TELECOMMUNICATIONS EQUIPMENT AFFECTED BY THIS CONTRACT WORK IS NOT TO BE ALTERED OR REMOVED BY THE CONTRACTOR. CONTACT THE COTR IN THE EVENT OF A CONFLICT.

NASA MARSHALL SPACE FLIGHT CENTER
HUNTSVILLE, ALABAMA 35812

REPAIR NORTHWEST AND SOUTHWEST LOW ROOFS OF STRUCTURES & DYNAMICS LABORATORY (4619)

L10 PLAN, ELEVATIONS & SECTIONS

AE FIRM: TIPPETT CLEPPER ASSOCIATES			NASA AE CONTRACT NO. NASA 8-39884
SUBMITTED:	APPROVAL RECOMMENDED:	CHIEF ENGINEERING DIVISION	
REF. NO.	REI DATE: 10/15/97	AB21 DATE: 12/18/97	AB41 DATE:
S3	DESIGNED JF / DRAWN WB / CHECKED JL	APPROVAL RECOMMENDED: LWG	DWG NO FAC-EB-4619-S3
	SCALE: AS NOTED	CHIEF: CIVIL/STRUCTURAL BRANCH / DESIGN DATE:	
		SPEC. NO. M4125	

MSFC MASTER BID DISK 11-18-2013

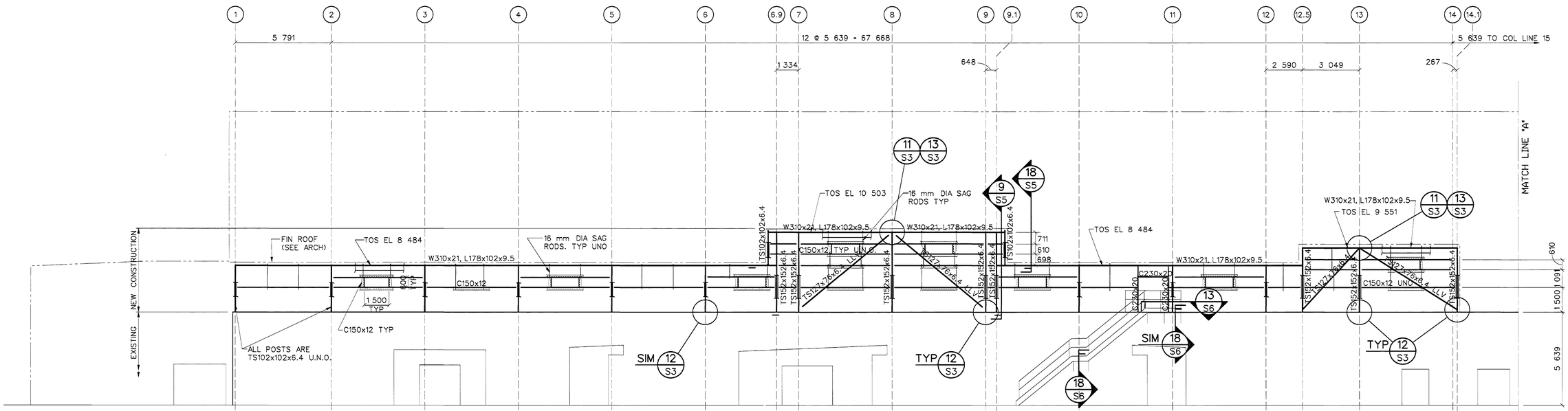

2 S4 PARTIAL SOUTH EL @ LOW WALL

1:100

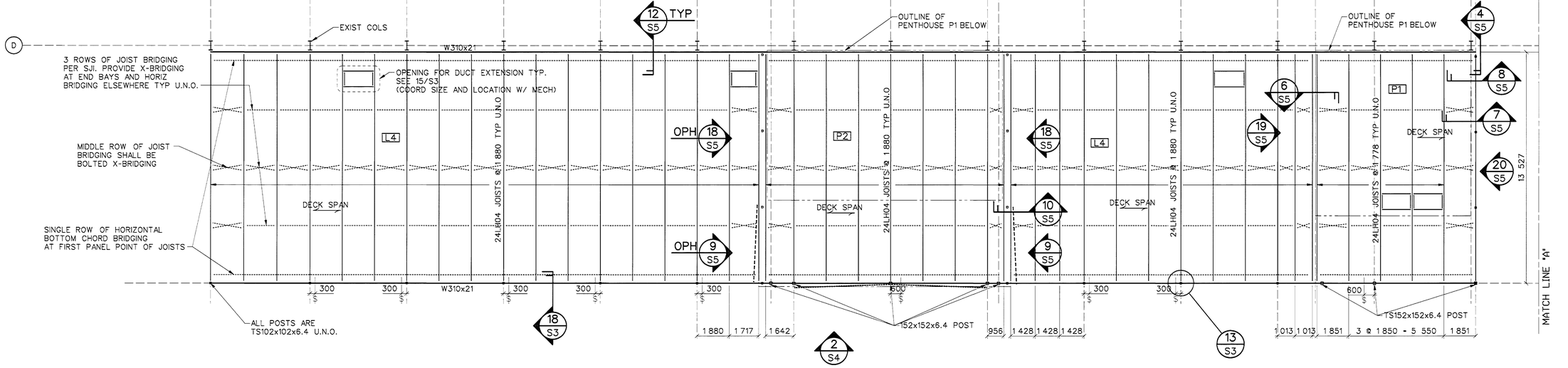

1 S4 PLAN OF NEW FRAMING @ L4

1:100

NOTES

1. POSTS SHALL BE CENTERED OVER EXIST CONC WALLS
2. BRACING SHALL ALIGN W/ POST CENTERLINES
3. ALL BRACING SHALL HAVE LONG SIDES VERT
4. POST BASE PLATE DETAILS SHOWN IN 12/S3

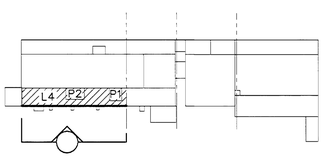

SHEET KEY PLAN

KEY PLAN

1:100

0 1 000 2 000 4 000 8 000

CONCURRENCE: E. A. 12/15/97
CONCURRENCE:
CONCURRENCE:
CONCURRENCE: MAINTENANCE 12/23/97
CONCURRENCE: USING OFFICE
CONCURRENCE: ENVIRONMENTAL HEALTH
CONCURRENCE: SAFETY OFFICE 12/16/97
CONCURRENCE: COMMUNICATIONS OFFICE 12/16/97

*TELECOMMUNICATIONS EQUIPMENT AFFECTED BY THIS CONTRACT WORK IS NOT TO BE ALTERED OR REMOVED BY THE CONTRACTOR. CONTACT THE COTR IN THE EVENT OF A CONFLICT.

REF. NO. S4

REV.	BY	DATE	REVISION	C.I. NO.	APPROVED

NASA MARSHALL SPACE FLIGHT CENTER
HUNTSVILLE, ALABAMA 35812

REPAIR NORTHWEST AND SOUTHWEST LOW ROOFS OF STRUCTURES & DYNAMICS LABORATORY (4619)

PARTIAL SOUTH ELEVATION & PLAN

AE FIRM: TIPPETT CLEPPER ASSOCIATES
NASA AE CONTRACT NO. NASA 8-39884

SUBMITTED:
APPROVAL RECOMMENDED: Richard Reynolds
CHIEF ENGINEERING DIVISION

RE: DATE: 10/15/97
AB21 DATE: 12/18/97
AB41 DATE:

DESIGNED JF
DRAWN JF
CHECKED JL
SCALE: 1:100

APPROVAL RECOMMENDED: LWG
CHIEF: CIVIL/STRUCTURAL BRANCH
DESIGN DATE:
SPEC. NO. M4125

DWG NO FAC-EB-4619-S4

MSFC MASTER BID DISK 11-18-2013

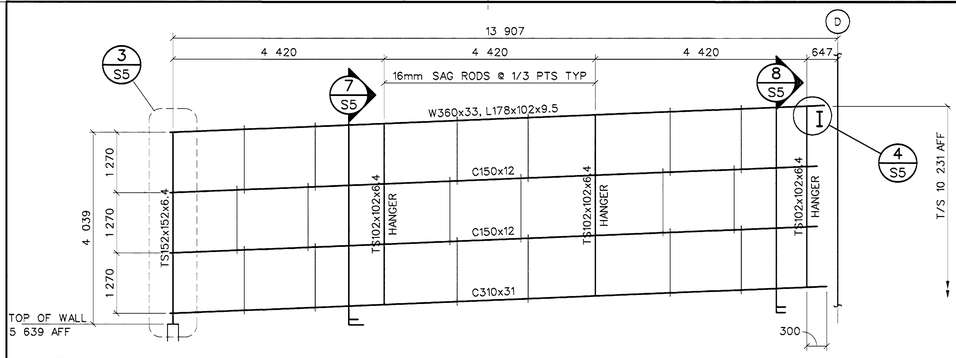

20 S5 EAST ELEVATION OF P1
1:50

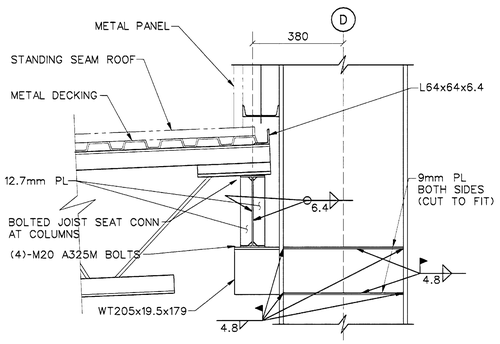

12 S5 SEATED BEAM CONNECTION
1:10

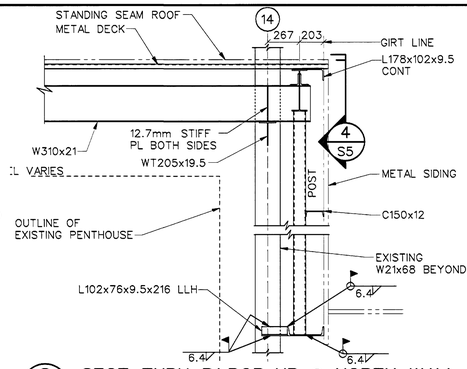

8 S5 SECT THRU P1 POP-UP @ NORTH WALL
1:20

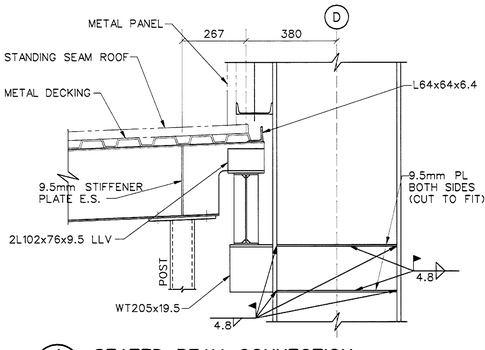

4 S5 SEATED BEAM CONNECTION
1:10

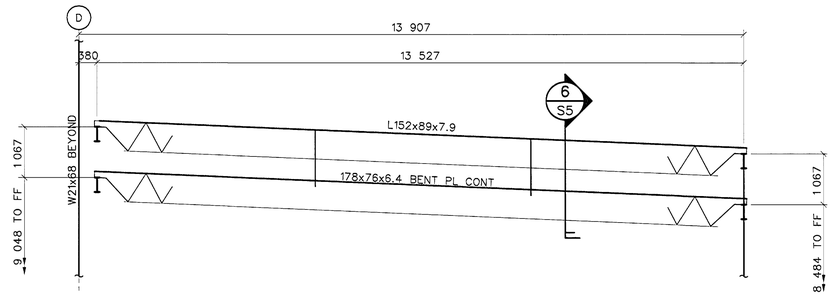

19 S5 WEST ELEVATION OF POP-UP OVER P1
1:50

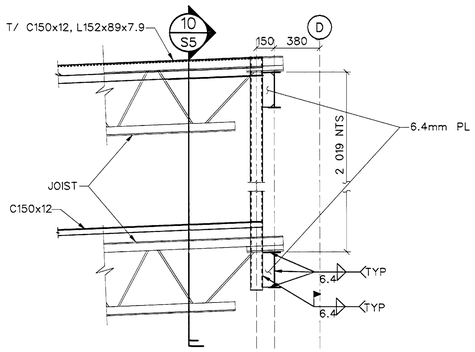

11 S5 POST CONN DET @ COL LINE D
1:20

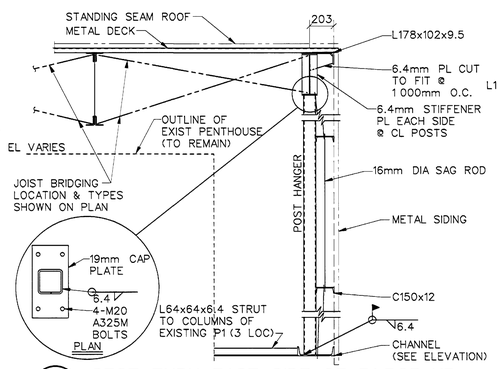

7 S5 SECT THRU EAST SIDE OF P1 POP-UP
1:20

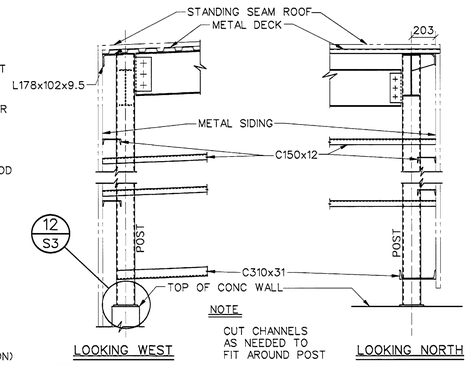

3 S5 CORNER DETAIL OF P1 POP-UP
1:20

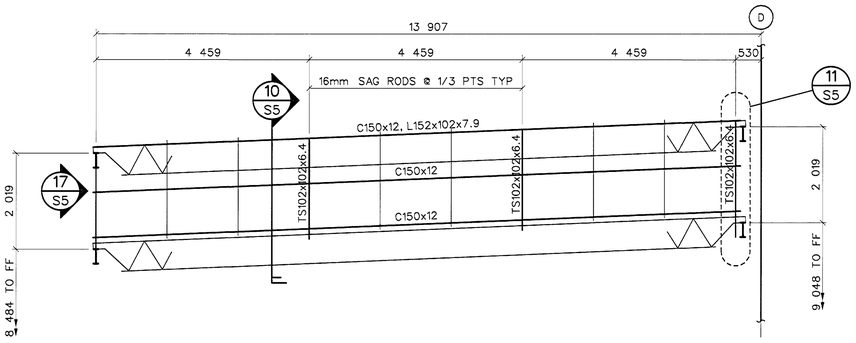

18 S5 EAST ELEVATION OF POP-UP OVER P2
1:50

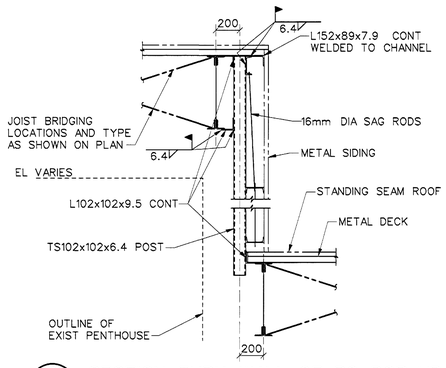

10 S5 SECTION THRU WALL OF P2 POP-UP
1:20

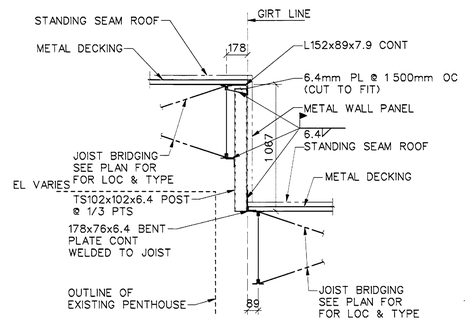

6 S5 SECT THRU EAST WALL OF P1 POP-UP
1:20

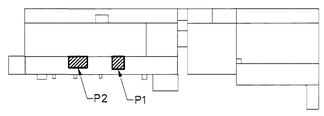

SHEET KEY PLAN

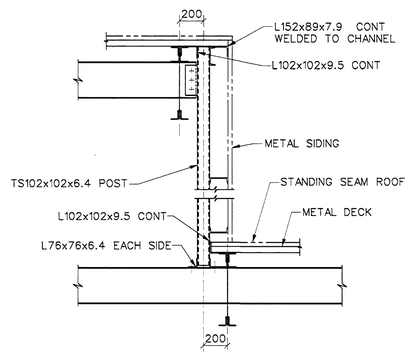

17 S5 SECTION @ CORNER OF P2 POP-UP
1:20

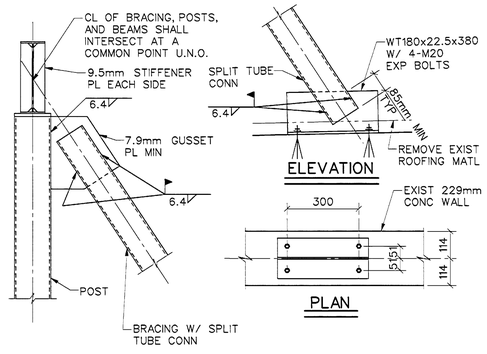

13 S5 BRACE CONNECTION DETAILS
1:10

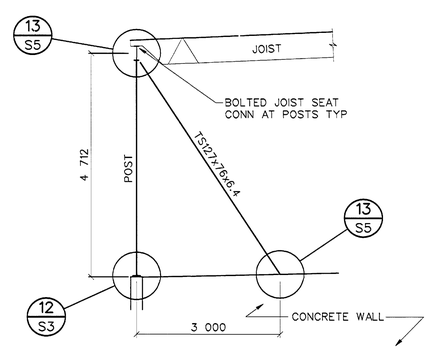

9 S5 L4 INTERSTITIAL BRACE
1:50

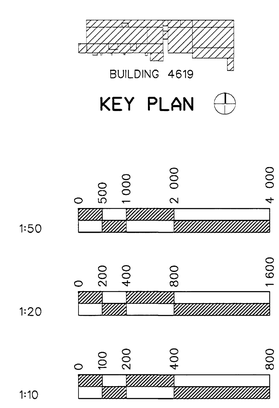

GEORGE R. CRAWFORD
REGISTERED No. 8560 PROFESSIONAL ENGINEER
HUNTSVILLE, ALABAMA

CONCURRENCE: R. A. L. 12/18/97
CONCURRENCE:
CONCURRENCE:
CONCURRENCE: MAINTENANCE 12/22/97
CONCURRENCE: USING OFFICE
CONCURRENCE: ENVIRONMENTAL HEALTH
CONCURRENCE: SAFETY OFFICE 12/18/97
CONCURRENCE: COMMUNICATIONS OFFICE 12/16/97

TELECOMMUNICATIONS EQUIPMENT AFFECTED BY THIS CONTRACT WORK IS NOT TO BE ALTERED OR REMOVED BY THE CONTRACTOR CONTACT THE COTR IN THE EVENT OF A CONFLICT.

REF. NO. S5

REV.	BY	DATE	REVISION	C.I. NO.	APPROVED

NASA MARSHALL SPACE FLIGHT CENTER HUNTSVILLE, ALABAMA 35812

REPAIR NORTHWEST AND SOUTHWEST LOW ROOFS OF STRUCTURES & DYNAMICS LABORATORY (4619)

P1, P2 ELEVATIONS AND SECTIONS

AE FIRM: TIPPETT CLEPPER ASSOCIATES — NASA AE CONTRACT NO. NASA 8-39884

SUBMITTED: — APPROVAL RECOMMENDED: Michael Reynolds — CHIEF ENGINEERING DIVISION

RE: DATE: 10/15/97 — AB2: DATE: 12/18/97 — AB4: DATE:

DESIGNED JF — DRAWN JF — CHECKED JL — SCALE: AS NOTED

APPROVAL RECOMMENDED: LWG — CHIEF: CIVIL/STRUCTURAL BRANCH — DESIGN DATE: — SPEC. NO. M4125

DWG NO FAC-EB-4619-S5

MSFC MASTER BID DISK 11-18-2013

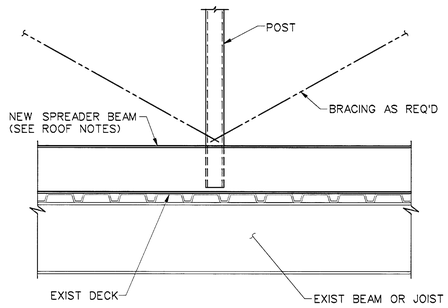

12 S6 SECTION PARALLEL TO BEAM OR JOIST
1:10

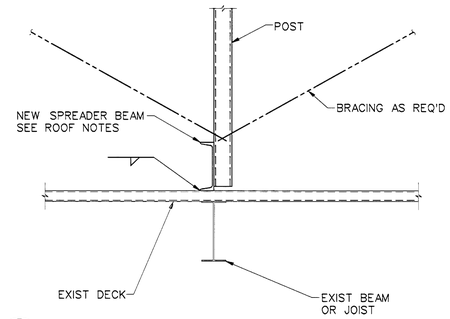

8 S6 SECTION PERP TO BEAMS OR JOISTS
1:10

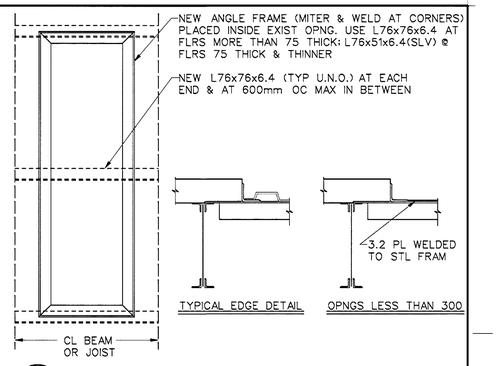

4 S6 CLOSURE FOR EXISTING FLR OPENING
NO SCALE — COORD W/ MECH, LOCATE IN FIELD

WIND PRESSURE TABLE (Pa)		
ZONES	ROOF UPLIFT PRESSURES	
	A≤1.0m²	A≥9.3m²
1	-1 200	-1 100
2	-1 120	-1 000
3	-1 900	-1 200
4	-2 900	-1 200

WIND PRESSURE TABLE (Pa)				
ZONES	WALL PRESSURES			
	A≤1.0m²		A≥46.0m²	
5	-1 100	1 020	-840	780
6	-1 400	1 020	-840	780

NOTES:
1) POSITIVE AND NEGATIVE PRESSURES SIGNIFY PRESSURES ACTING TOWARD AND AWAY FROM PERPENDICULAR SURFACES, RESPECTIVELY.
2) LINEAR INTERPOLATION MAY BE USED FOR INTERMEDIATE VALUES OF TRIBUTARY AREA.
3) ZONE WIDTHS SHALL BE 1 500mm U.N.O.

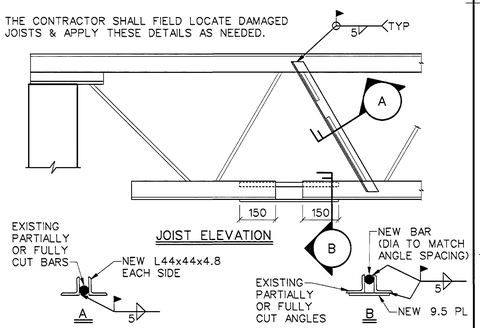

NOTE: THESE DETAILS ARE FOR CONDITIONS EXISTING PRIOR TO CONSTRUCTION. THE CONTRACTOR SHALL NOT CUT EXISTING OR NEW JOISTS.

3 S6 EXISTING STEEL JOIST REPAIR DETAILS
NO SCALE — NOTE: ALL STEEL WELDABLE GRADE

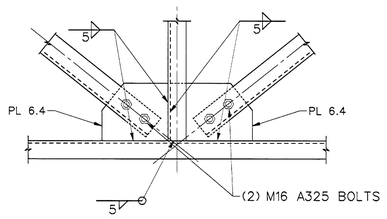

19 S5 STAIR LANDING CONN DETAIL
1:5 — NOTE: ALL BOLTS ARE M16 U.N.O.

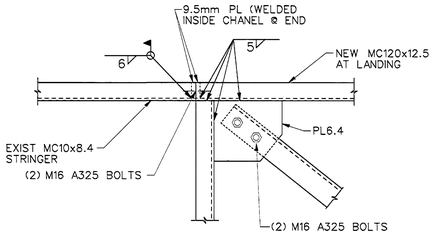

15 S6 STAIR LANDING CONN DETAIL
1:5 — NOTE: ALL BOLTS ARE M16 U.N.O.

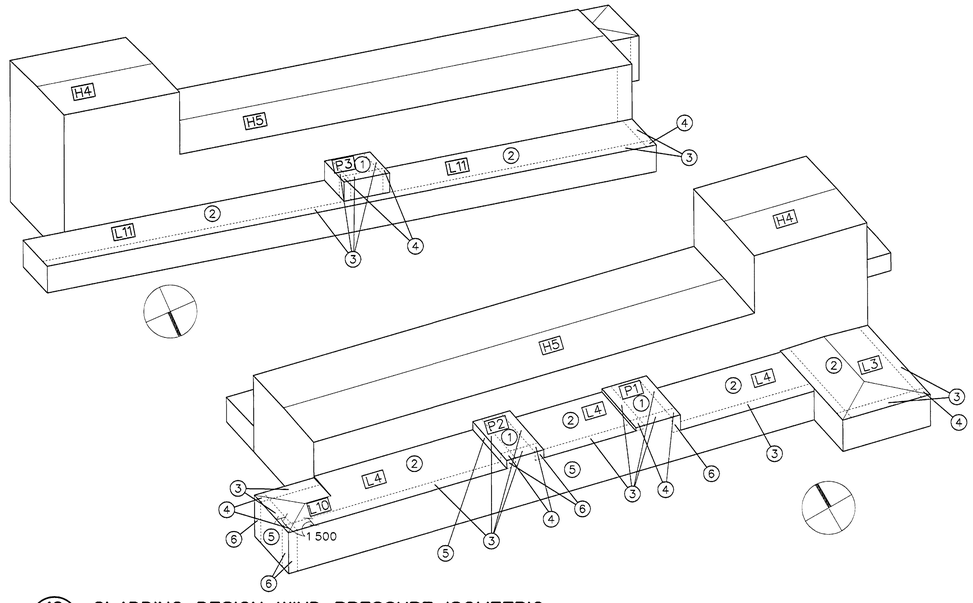

10 S6 CLADDING DESIGN WIND PRESSURE ISOMETRIC
NO SCALE

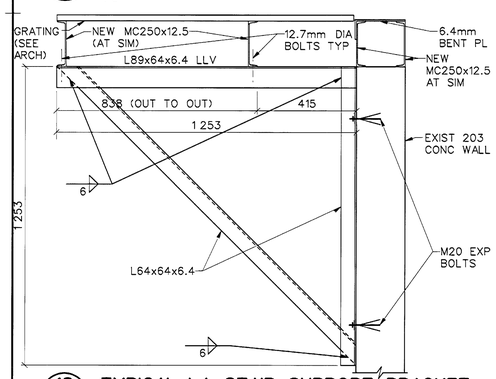

18 S6 TYPICAL L4 STAIR SUPPORT BRACKET
1:10

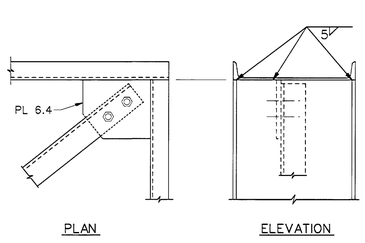

14 S6 STAIR LANDING CONN DETAIL
1:5 — NOTE: ALL BOLTS ARE M16 U.N.O.

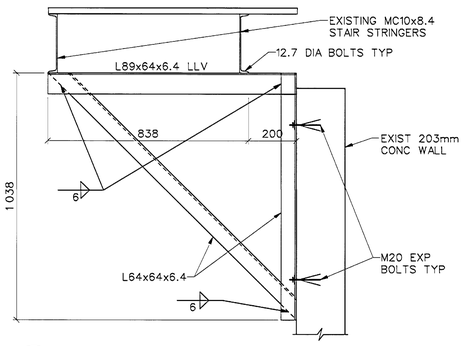

17 S6 TYPICAL L11 STAIR SUPPORT BRACKET
1:10

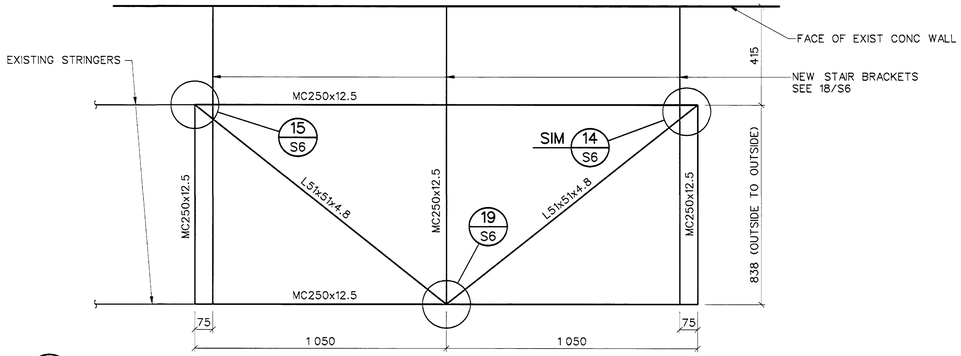

13 S6 L4 STAIR LANDING
1:10

KEY PLAN

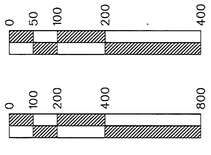

CONCURRENCE: R4L 12/16/97
CONCURRENCE:
CONCURRENCE:
CONCURRENCE: MAINTENANCE 12/23/97
CONCURRENCE: USING OFFICE
CONCURRENCE: ENVIRONMENTAL HEALTH
CONCURRENCE: SAFETY OFFICE 12/19/97
CONCURRENCE: COMMUNICATIONS OFFICE 12/16/97

TELECOMMUNICATIONS EQUIPMENT AFFECTED BY THIS CONTRACT WORK IS NOT TO BE ALTERED OR REMOVED BY THE CONTRACTOR. CONTACT THE COTR IN THE EVENT OF A CONFLICT.

REF. NO.

S6

REV.	BY	DATE	REVISION	C.I. NO.	APPROVED

NASA MARSHALL SPACE FLIGHT CENTER
HUNTSVILLE, ALABAMA 35812

REPAIR NORTHWEST AND SOUTHWEST LOW ROOFS OF STRUCTURES & DYNAMICS LABORATORY (4619)

MISCELLANEOUS SECTIONS, DETAILS

AE FIRM: TIPPETT CLEPPER ASSOCIATES
NASA AE CONTRACT NO. NASA 8-39884
SUBMITTED:
APPROVAL RECOMMENDED: Richard Reynolds — CHIEF ENGINEERING DIVISION
RE: DATE: 10/15/97
AE&T DATE: 12/18/97 — AE&T DATE:
DESIGNED JF
DRAWN JF
CHECKED JL
SCALE: AS NOTED
APPROVAL RECOMMENDED: LWG — CHIEF: CIVIL/STRUCTURAL BRANCH
DESIGN DATE:
SPEC. NO. M4125
DWG NO FAC-EB-4619-S6

GEORGIA REGISTERED No. 8550 PROFESSIONAL ENGINEER JACK D. LYNCH

MSFC MASTER BID DISK 11-18-2013

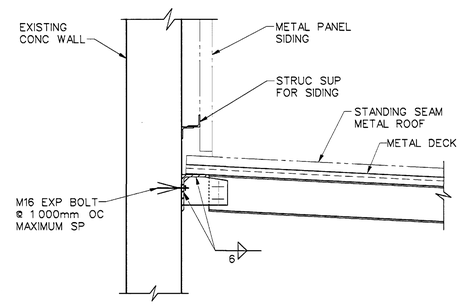

8 S7 SECTION THRU L7 AT CONC WALL

1:10

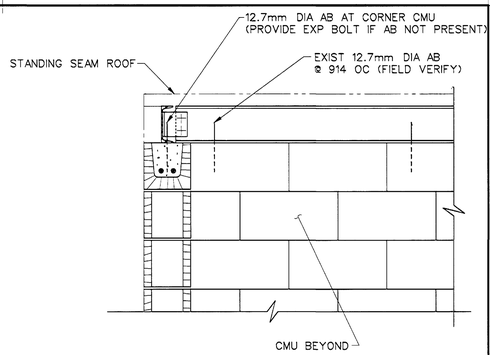

4 S7 ROOF SUPPORT CONNECTION

1:10

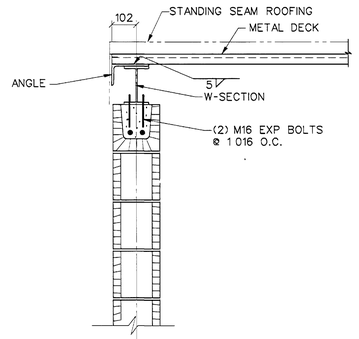

7 S7 SECTION THRU TYP WALL-ROOF INT

1:10

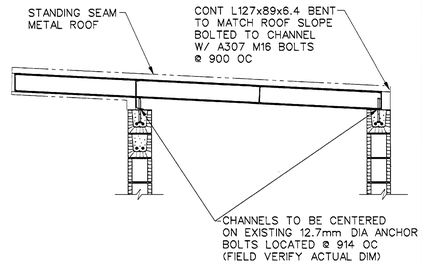

3 S7 SECTION THRU L8 (L6 OPP HAND)

1:20

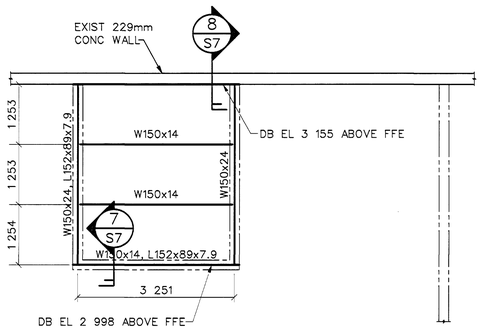

10 S7 ROOF PLAN FOR L5

1:50 NOTE:

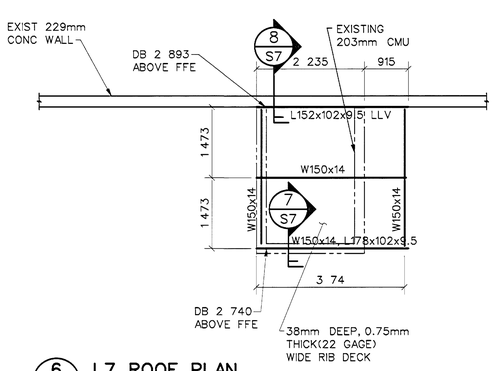

6 S7 L7 ROOF PLAN

1:50

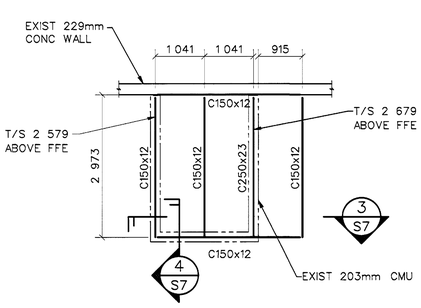

2 S7 ROOF PLAN FOR L8 (L6 OPP HAND)

1:50 NOTE: ALL DIMS ARE TO BACK SIDE OF CHANNELS

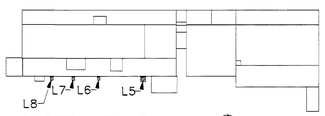

SHEET KEY PLAN

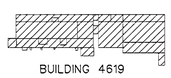

BUILDING 4619

KEY PLAN

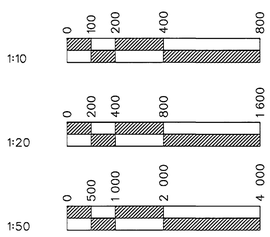

CONCURRENCE: R. A. L 12/16/97

CONCURRENCE: / / / /

CONCURRENCE: / / / /

CONCURRENCE: MAINTENANCE 12/22/97

CONCURRENCE: USING OFFICE / / / /

CONCURRENCE: ENVIRONMENTAL HEALTH / / / /

CONCURRENCE: SAFETY OFFICE 12/16/97

CONCURRENCE: COMMUNICATIONS OFFICE 12/16/97

TELECOMMUNICATIONS EQUIPMENT AFFECTED BY THIS CONTRACT WORK IS NOT TO BE ALTERED OR REMOVED BY THE CONTRACTOR. CONTACT THE COTR IN THE EVENT OF A CONFLICT.

REV.	BY	DATE	REVISION	C.I. NO.	APPROVED

NASA MARSHALL SPACE FLIGHT CENTER
HUNTSVILLE, ALABAMA 35812

REPAIR NORTHWEST AND SOUTHWEST LOW ROOFS OF STRUCTURES & DYNAMICS LABORATORY (4619)

AIRLOCK PLANS, ELEVATIONS AND DETAILS

AE FIRM: TIPPETT CLEPPER ASSOCIATES			NASA AE CONTRACT NO. NASA 8-39884
SUBMITTED:	APPROVAL RECOMMENDED: Michael Reynolds		CHIEF ENGINEERING DIVISION:
REF. NO.	RE: DATE: 10/15/97	AB21 DATE: 12/18/97 LWG	AB41 DATE:
S7	DESIGNED JF DRAWN JF CHECKED JL	APPROVAL RECOMMENDED: CHIEF, CIVIL/STRUCTURAL BRANCH DESIGN DATE:	DWG NO FAC-EB-4619-S7
	SCALE: AS NOTED	SPEC. NO. M4125	

MSFC MASTER BID DISK 11-18-2013

NOTE	DESCRIPTION	ACTION	OTHER
1		REMOVE EXISTING ITEMS, INSULATION, FLASHING AND SUPPORTS FOR INSTALLATION OF NEW WALL PANELS AND/OR ROOF. PROVIDE TEMPORARY SUPPORTS. PROVIDE NEW ITEMS, INSULATION, AND ALUMINUM JACKET, IN PLACE OF EXISTING REMOVED. NEW ITEM, INSULATION, SIZE AND TYPE TO MATCH EXISTING. EXTEND AND OFFSET NEW ITEMS SUPPORTED ON NEW WALL/ROOF EXTERIOR NEAR PREVIOUS EXISTING LOCATION. PROVIDE NEW ITEMS AND WALL SLEEVES, SUPPORTS, WATERTIGHT SEALS, CAULKING, FLASHING AND COUNTERFLASHING TO MATCH NEW WALL/ROOF PANELS. TURN END OF OPEN PIPING TO MATCH EXISTING.	NOTE 41 SEE ARCHITECTURAL FOR ADDITIONAL DETAILS. SEE GENERAL NOTES.
2		REMOVE EXISTING ITEMS, FRAME, DUCT CONNECTION, AND WIRING (COORDINATE WITH ELECTRICAL) FOR INSTALLATION OF NEW WALL PANELS AND/OR ROOF. CONNECT NEW INTERIOR DUCTWORK AND HOODS, SIZE AND TYPE TO MATCH EXISTING. EXTEND AND OFFSET NEW DUCTWORK THROUGH NEW WALL, PANEL AND ROOF. PROVIDE NEW ITEMS, DUCTWORK, SLEEVES, CURBS, SUPPORTS, WATERTIGHT SEAL, FLASHING, AND, COUNTERFLASHING TO MATCH ROOF/WALL PANELS.	SEE ARCHITECTURAL FOR ADDITIONAL DETAILS. NOTE 115 SEE GENERAL NOTES.
3	EXISTING LN2 PIPES 310mm (1 EACH) 360mm (1 EACH)	NEW PIPE INSULATION AND JACKET AT NEW ROOF AND WALL PENETRATIONS.	NOTE 1
4	EXISTING PIPES 150mm (1 EACH) 200mm (1 EACH)	NEW PIPE INSULATION AND JACKET AT NEW ROOF AND WALL PENETRATIONS. AND INSIDE INTERSTITIAL SPACE.	NOTE 1
5	EXISTING HORN SPEAKER (EACH)	REMOVE SPEAKER MOUNTING AND GIVE TO ELECTRICAN. SPEAKER TO BE REINSTALLED.	
6	EXISTING GOOSENECK: 1780mm X 760mm (EACH)	EXTEND NEW DUCTWORK THROUGH NEW ROOF AND PROVIDE NEW GOOSENECK.	NOTE 2. SEE GENERAL NOTES. ARRANGEMENT PER SMACNA FIG.5-5 1985.
7	EXISTING VENTILATOR: 920mm X 920mm (EACH)	EXTEND NEW DUCTWORK THROUGH NEW ROOF AND REINSTALL VENTILATOR.	NOTE 2. SEE GENERAL NOTES. ARRANGEMENT PER SMACNA FIG.5-7 1985.
8	EXISTING GOOSENECK: 230mm X 230mm (EACH)	EXTEND NEW DUCTWORK THROUGH NEW ROOF AND PROVIDE NEW GOOSENECK.	NOTE 2
9	EXISTING VENTILATOR: 1020mm X 1020mm (EACH)	EXTEND NEW DUCTWORK THROUGH NEW ROOF AND INSTALL VENTILATOR.	NOTE 2
10	EXISTING PIPE VENT: 75mm (EACH)	EXTEND NEW PIPE VENTS THROUGH NEW ROOF.	NOTE 1
11	EXISTING HOODS 610mm X 610mm (1 EACH) 920mm X 920mm (1 EACH)	EXTEND NEW DUCTWORK THROUGH NEW ROOF AND PROVIDE NEW HOODS.	NOTE 2
12	EXISTING PIPE VENTS: 25 mm (EACH)	EXTEND NEW PIPE VENTS THROUGH NEW ROOF.	NOTE 1
13	EXISTING PIPES 25mm (1 EACH) 40mm (1 EACH) 355mm (1 EACH) 130mm (1 EACH) 50mm (1 EACH)	REMOVE 50mm TEE CONNECTION. EXTEND NEW PIPE FROM OPEN ENDED PIPING THROUGH NEW ROOF. INSULATE AND JACKET PIPING INSIDE INTERSTITIAL SPACE AND THROUGH NEW WALL PENETRATIONS.	NOTE 1
14	EXISTING PIPES 50mm (2 EACH) 75mm (1 EACH) 100mm (1 EACH) 130mm (2 EACH) 150mm (1 EACH) 200mm (3 EACH)	NEW PIPE INSULATION AND JACKET ON PIPING. REMOVE 130mm DIAMETER PIPES AND REPLACE WITH NEW 130mm PIPES AT 1525mm ABOVE EXISTING ROOF. RELOCATE 100mm PIPING ONTO NEW WALL.	NOTES 1
15	EXISTING HOOD 1070mm X 1070mm (EACH)	EXTEND NEW DUCTWORK THROUGH NEW ROOF AND PROVIDE NEW HOODS.	NOTE 2
16	EXISTING N2 PIPES 25mm (3 EACH) 50mm (1 EACH)	INSULATE AND JACKET HEADER AND OTHER PIPING.	NOTE 1, 23
17	EXISTING HOOD: 1220mm X 1220mm (EACH)	EXTEND NEW DUCTWORK THROUGH NEW ROOF AND PROVIDE NEW HOOD.	NOTE 2
18	EXISTING GOOSENECK: 3050mm X 760mm (2 EACH)	EXTEND NEW DUCTWORK THROUGH NEW ROOF AND PROVIDE NEW GOOSENECKS.	NOTE 2
19	EXISTING HOOD: 810mm X 810mm (EACH)	EXTEND NEW DUCTWORK THROUGH NEW ROOF AND PROVIDE NEW HOOD.	NOTE 2
20	EXISTING N2 VENT PIPE: 100mm (EACH)	EXTEND NEW N2 PIPE VENT THROUGH WALL AND RELOCATE VENT BOX AND N2 PIPE OUTSIDE OF NEW WALL. INSULATE AND JACKET PIPING IN INTERSTITIAL SPACE	NOTE 1,
21	EXISTING PIPE VENT: 25mm (2 EACH)	EXTEND NEW PIPE THROUGH NEW ROOF	NOTE 1,
22	EXISTING TEMPERATURE BULB AND SHIELD (EACH)	REPLACE EXISTING TEMPERATURE BULB WITH NEW TEMPERATURE BULB FROM CONTROL PANEL TO NEW EXTERIOR WALL WITH NEW METAL SHIELD TO MATCH NEW WALL PANEL	TEMPERATURE BULB CHARACTERISTICS TO MATCH EXISTING. NOTE 2
23	EXISTING PIPE AND SHEET METAL 25mm (2 EACH) PIPE 30mm (1 EACH) PIPE 40mm (6 EACH) PIPE 50mm (4 EACH) PIPE 65mm (1 EACH) PIPE 75mm (1 EACH) PIPE 90mm (1 EACH) PIPE 130mm (1 EACH) PIPE 305mm (1 EACH) SHEETMETAL 100mm HEADER PIPE 65mm HEADER PIPE	INSULATE AND JACKET PIPING HEADER AND OTHER PIPING INSIDE INTERSTITIAL SPACE AND THROUGH NEW WALLS. EXTEND NEW PIPE FROM OPEN ENDED PIPING THROUGH NEW ROOF INSULATE AND JACKET PIPING TO ROOF AND THROUGH WALLS. EXTEND NEW SHEET METAL PIPE THROUGH NEW ROOF WITH INSULATION AND JACKET.	NOTE 1, 16 FOR PIPING NOTE 2 AND 208 FOR SHEETMETAL
24	EXISTING GOOSENECK: 2440mm X 760mm (EACH)	EXTEND NEW DUCTWORK THROUGH NEW ROOF AND PROVIDE NEW GOOSENECK.	NOTE 2
25	EXISTING PIPE VENT: 75mm (EACH)	EXTEND NEW PIPE VENT THROUGH NEW ROOF.	NOTE 1

NOTE	DESCRIPTION	ACTION	OTHER
26	EXISTING TEMPERATURE BULB AND SHIELD (EACH)	REPLACE WITH NEW.	NOTE 2, 22
27	EXISTING PIPE VENT: 50mm (EACH)	EXTEND NEW PIPE VENT THROUGH NEW ROOF.	NOTE 1
28	EXISTING HOODS AND GOOSENECK 760mm X 760mm (3 EACH)	EXTEND NEW DUCTWORK THROUGH ROOF AND PROVIDE NEW HOODS.	NOTE 2
29	EXISTING HOOD: 610mm X 610mm (EACH)	EXTEND NEW DUCTWORK THROUGH NEW ROOF AND PROVIDE NEW HOOD.	NOTE 2
30	EXISTING VENTILATOR: 760mm X 760mm (EACH)	EXTEND NEW DUCTWORK THROUGH NEW ROOF AND REINSTALL VENTILATOR.	NOTE 2
31	EXISTING ROOF DRAINS: 130mm (5 EACH)	CAP EXISTING ROOF DRAINS.	
32	EXISTING PIPE VENT: 150mm WITH CAP (EACH)	EXTEND NEW PIPE VENT THROUGH NEW ROOF AND REINSTALL CAP.	NOTE 1
33	EXISTING PIPE VENTS: (1 EACH) 30mm AND 50mm	EXTEND NEW PIPE VENTS THROUGH NEW ROOF.	NOTE 1
34	EXISTING GOOSENECKS: 915mm X 1220mm (2 EACH)	EXTEND NEW DUCTWORK THROUGH NEW ROOF AND PROVIDE NEW GOOSENECKS.	NOTE 2
35	EXISTING GOOSENECKS: 460mm X 1670mm (EACH)	EXTEND NEW DUCTWORK THROUGH NEW ROOF AND PROVIDE NEW GOOSENECK.	NOTE 2
36 THRU 37	NOT USED		
38	EXISTING LOUVER: 2440mm X 1220mm (EACH)	EXTEND NEW DUCTWORK TO NEW WALL ABOVE NEW ROOF. PROVIDE NEW LOUVER AT NEW WALL.	NOTE 2.
39	EXISTING PIPE & HOSE 25mm HOSE (1 EACH) 40mm (1 EACH) 50mm (2 EACH) 100mm (1 EACH) 150mm (1 EACH) 200mm (1 EACH)	REMOVE EXISTING METAL PIPE COVER. INSULATE AND JACKET THE 150mm AND 200mm PIPING. REMOVE OPEN ENDED DOWN TURNED PIPE ELBOWS. EXTEND NEW PIPE FROM OPEN ENDED PIPING THROUGH NEW ROOF. INSULATE AND JACKET PIPING, INSIDE INTERSTITIAL SPACE AND THROUGH WALLS.	NOTE 1
40	EXISTING PIPE 50mm (EACH)	EXTEND NEW PIPE THROUGH NEW ROOF.	NOTE 1
41	TYPICAL NEW PIPE PENETRATIONS	TYPICAL OPEN ENDED PIPE PENETRATIONS. LOCATE MINIMUM OF 3050mm FROM HOODS AND VENTILATORS (TYPICAL).	NOTE 1
42	NEW SENSOR	NOTE 22	NOTE 2
43	EXISTING HOODS 610mm X 610mm (2 EACH) 760mm X 760mm (2 EACH) 410mm X 410mm (1 EACH)	EXTEND NEW DUCTWORK THROUGH NEW ROOF AND PROVIDE NEW HOODS.	NOTE 2
44	EXISTING LOUVER 610mm X 460mm (EACH)	EXTEND NEW DUCTWORK THROUGH NEW WALL AND PROVIDE NEW LOUVER.	NOTE 2
45	EXISTING PIPES 50mm (1 EACH) 65mm (1 EACH)	EXTEND NEW PIPES THROUGH NEW ROOF.	NOTE 1
46	EXISTING VENTILATORS 1220mm X 1220mm (1 EACH) 610mm X 610mm (1 EACH)	EXTEND NEW DUCTWORK THROUGH NEW ROOF AND REINSTALL VENTILATORS.	NOTE 2
47	EXISTING PIPE 40mm (EACH)	EXTEND NEW PIPES THROUGH NEW ROOF.	NOTE 1
48	EXISTING PIPES 25mm (1 EACH) 100mm (1 EACH)	EXTEND NEW PIPES THROUGH NEW ROOF.	NOTE 1
49	EXISTING PIPES 50mm (1 EACH) 100mm (2 EACH)	EXTEND NEW PIPES THROUGH NEW ROOF.	NOTE 1
50 THRU 67	NOT USED		

LEGEND

VALVE, STRAIGHT

DUCT SECTION

PIPE ELBOWS

mm MILLIMETER

NORTH ARROW

GENERAL NOTES (APPLIES TO M SHEETS AND NOTES)

A. DIMENSIONS ARE IN MILLIMETERS. DIMENSIONS ARE APPROXIMATE. EXISTING OUTSIDE PIPE DIMENSIONS INCLUDE EXISTING INSULATION THICKNESS.

B. SEE ARCHITECTURAL FOR ADDITIONAL DETAILS OF WALL PIPE/DUCT SUPPORTS AND PENETRATION FLASHING. PROVIDE SEALANT AND PIPE COLLARS SET IN MASTIC; SEE 2\A4. PROVIDE ELASTOMERIC PIPE FASHINGS WITH FLEXIBLE ALUMINUM "DEKTITE" FASTENING RINGS; SEE 6\A5. PROVIDE SLOPE COMPENSATED CURBS WITH BUILT IN CRICKET DIVERTER, COUNTER FLASHINGS TO ROOF, AND ADDITIONAL ANGLE IRON SUPPORTS TO ROOF JOISTS FOR LOADS GREATER THAN 900 N; SEE 10\A5 AND 14\S3. PROVIDE MULTIPLE DUCTS THROUGH ROOF SYSTEM TO AVOID JOISTS AND SUPPORTS.

C. EXTERIOR SHEET METAL CONSTRUCTION TO BE PER SMACNA 1985, 152.4 mm WATER GUAGE PRESSURE CLASS, JOINT AND TRANSVERSE REINFORCEMENT AT 1524 mm MAXIMUM, 1.5 mm UNCOATED STEEL MINIMUM THICKNESS, WELDED WATERTIGHT, PRIMED FOR PAINTING, WITH 12 mm MESH BIRDSCREEN ACROSS OPENING. SIZE TO MATCH EXISTING CONNECTION.

D. ACTION ITEMS AND NOTES ARE NEW UNLESS NOTED OTHERWISE. FOR CLARITY; INDIVIDUAL PLANS AND ELEVATIONS DO NOT SHOW EVERY ITEM REQUIRED OR SHOWN ELSEWHERE.

E. THE CONTRACTOR SHALL FIELD VERIFY DIMENSIONS SHOWN AND CONDITIONS PERTAINING TO THE EXISTING STRUCTURE PRIOR TO COMMENCING WORK. SUBMIT CONTRACTORS SHOP DRAWINGS WITH DIMENSIONS FOR FRAMED STEEL OPENINGS AND CURB SIZES TO THE CONTRACTING OFFICER AND COORDINATED WITH STRUCTURAL STEEL AND ROOFING SUBCONTRACTORS, INDICATING SUCH COORDINATION IN WRITING FROM EACH SUBCONTRACTOR PRIOR TO FABRICATION.

F. INSULATE NEW AND EXISTING PIPING AND DUCTWORK IN INTERSTITIAL SPACE.

G. NEW LOUVERS SHOWN ON MECHANICAL AND ARCHITECTURAL PLANS ARE TO BE PROVIDED AND INSTALLED BY THE MECHANICAL CONTRACTOR.

H. ARRANGEMENT FOR GOOSENECK INSTALLATION TO BE PER SMACNA FIG.5-5 1985. ARRANGEMENT FOR VENTILATOR INSTALLATION TO BE PER SMACNA FIG.5-7 1985. EXTEND NEW DUCTWORK FROM EXISTING DUCTWORK TO VENTILATORS AND GOOSENECKS. PROVIDE SUPPORTS FROM JOISTS AND BUILDING STRUCTURE TO GOOSENECKS AND OTHER DEVICES.

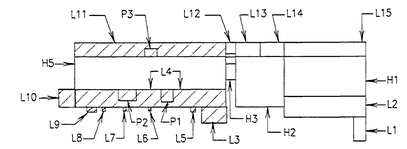

BUILDING 4619

KEY PLAN

ALABAMA REGISTERED PROFESSIONAL ENGINEER No. 15695 DOUGLAS SHIVER

CONCURRENCE		REV.	BY	DATE	REVISION	C.I. NO.	APPROVED
R A	1/12/1997						
	/ / / /						
	/ / / /						
MAINTENANCE	1/12/1997						
USING OFFICE	/ / / /						
ENVIRONMENTAL HEALTH	/ / / /						
SAFETY OFFICE	12/19/97						
COMMUNICATIONS OFFICE	1/12/1997						

TELECOMMUNICATIONS EQUIPMENT AFFECTED BY THIS CONTRACT WORK IS NOT TO BE ALTERED OR REMOVED BY THE CONTRACTOR. CONTACT THE COTR IN THE EVENT OF A CONFLICT.

NASA Marshall Space Flight Center
Huntsville, Alabama 35812

REPAIR NORTHWEST AND SOUTHWEST LOW ROOFS OF STRUCTURES & DYNAMICS LABORATORY (4619)

NOTES AND LEGEND

AE FIRM: TIPPETT CLEPPER ASSOCIATES			NASA AE CONTRACT NO. NASA 8-39884
SUBMITTED	APPROVAL RECOMMENDED		APPROVED
REF. NO.	RD DATE: 10/15/97	4321 DATE: 12/18/97	4341 DATE:
M1	DESIGNED GFG DRAWN JGS CHECKED WDS SCALE: NONE	APPROVAL RECOMMENDED CHIEF: MECH/ELECT BRANCH DESIGN DATE: SPEC. NO. M4125	CHIEF ENGINEERING DIVISION DWG NO FAC-EB-4619-M1

ARCHITECTURAL INFORMATION
10/16/96 11:12 BJB 0.0
K:\4321911.PRA\C4021

DATE: 10/13/97 TIME: 13:55
USER: GFG/GFG
FILE: Q:\3911.PRA\CHOTMNH

MSFC MASTER BID DISK 11-18-2013

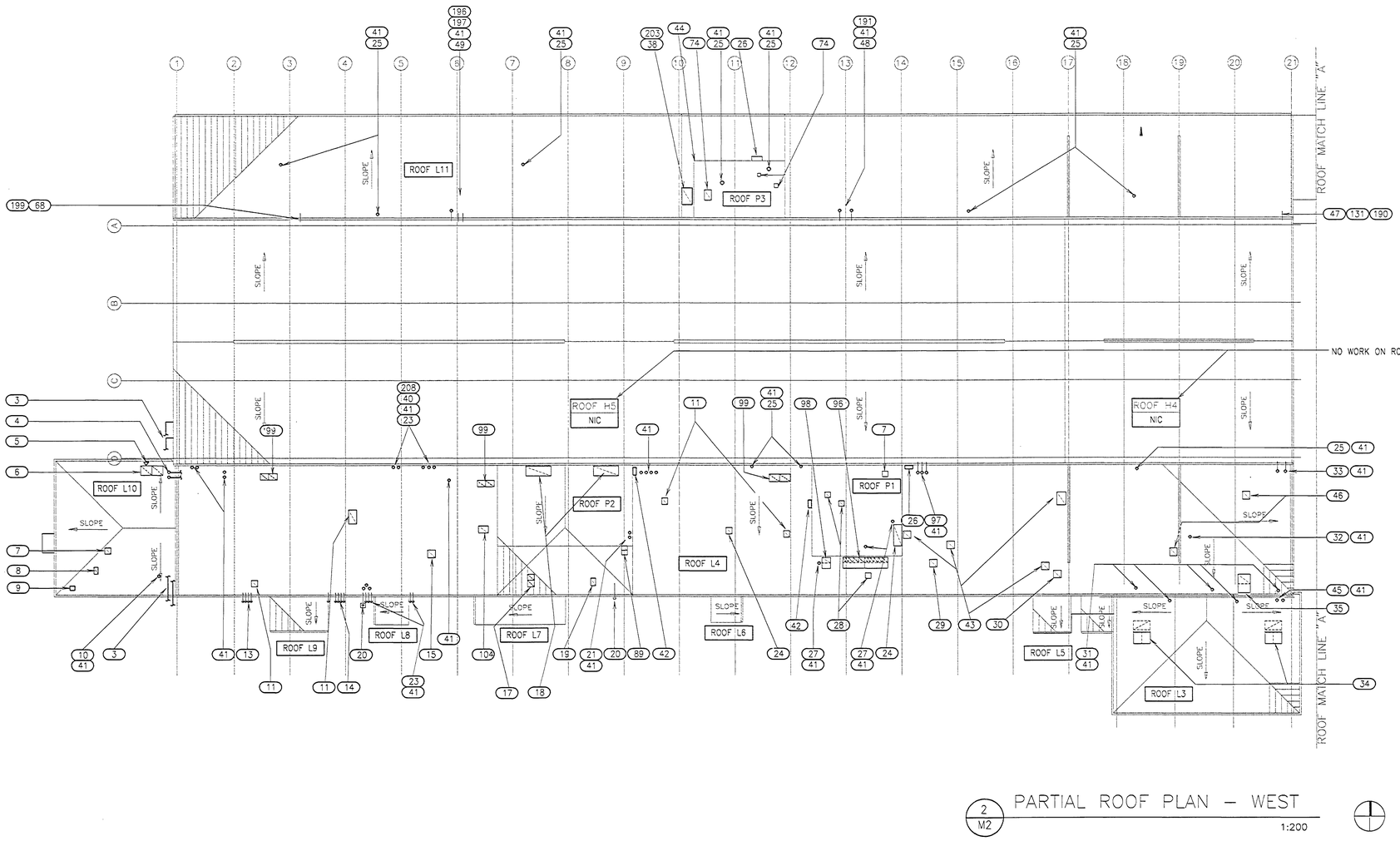

2/M2 PARTIAL ROOF PLAN – WEST

1:200

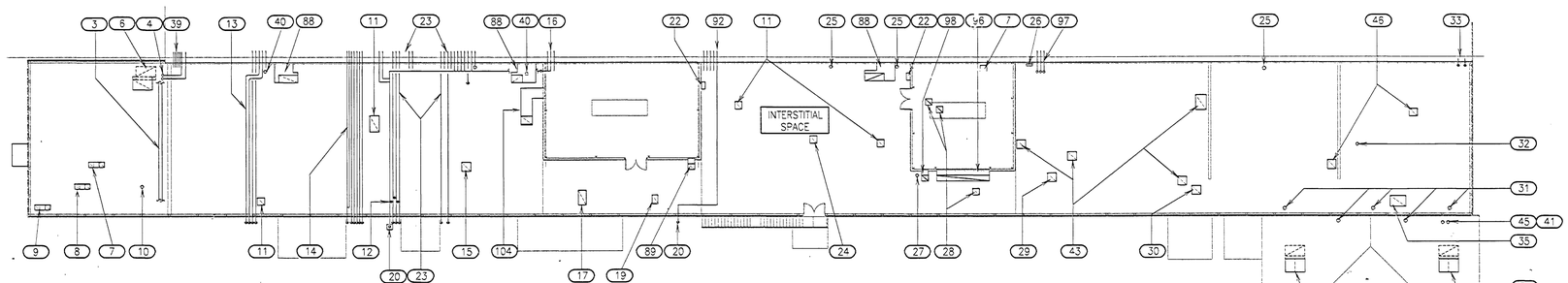

1/M2 PENTHOUSE LEVEL PLAN

1:200

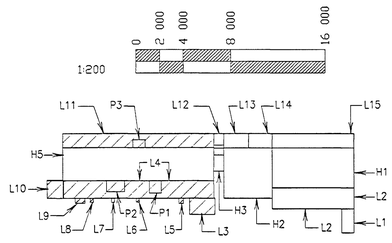

BUILDING 4619

KEY PLAN

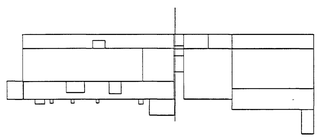

KEY PLAN

CONCURRENCE: R. A... 12/16/97

CONCURRENCE: / / / /

CONCURRENCE: / / / /

CONCURRENCE: MAINTENANCE 12/23/97

CONCURRENCE: USING OFFICE / / / /

CONCURRENCE: ENVIRONMENTAL HEALTH / / / /

CONCURRENCE: SAFETY OFFICE 12/16/97

CONCURRENCE: COMMUNICATIONS OFFICE 12/16/97

TELECOMMUNICATIONS EQUIPMENT AFFECTED BY THIS CONTRACT WORK IS NOT TO BE ALTERED OR REMOVED BY THE CONTRACTOR. CONTACT THE COTR IN THE EVENT OF A CONFLICT.

REV.	BY	DATE	REVISION	C.I. NO.	APPROVED

NASA Marshall Space Flight Center
Huntsville, Alabama 35812

REPAIR NORTHWEST AND SOUTHWEST LOW ROOFS OF STRUCTURES & DYNAMICS LABORATORY (4619)

INTERSTITIAL SPACE AND ROOF PLAN

AE FIRM: TIPPETT CLEPPER ASSOCIATES

NASA AE CONTRACT NO. NASA 8-39884

SUBMITTED: [signature]

APPROVAL RECOMMENDED: Michael Reynolds 12/18/97

APPROVED: CHIEF ENGINEERING DIVISION

RE. DATE: 10/15/97 | AE21 DATE: 12/18/97 | AE41 DATE:

REF. NO.: M2

DESIGNED GFG
DRAWN DBD
CHECKED WDS
SCALE: 1:200

APPROVAL RECOMMENDED BCD
CHIEF, MECH/ELECT BRANCH
DESIGN DATE:
SPEC NO. M4125

DWG NO: FAC-EB-4619-M2

ARCHITECTURAL INFORMATION
10/29/96 10:00 RJR
K:\A9JN191\PRJ\CAP2

DATE: 10/13/97 TIME: 13:59
USER: GFG
FILE: Q:\9JN191.PRJ\CAP2MAN2

MSFC MASTER BID DISK 11-18-2013

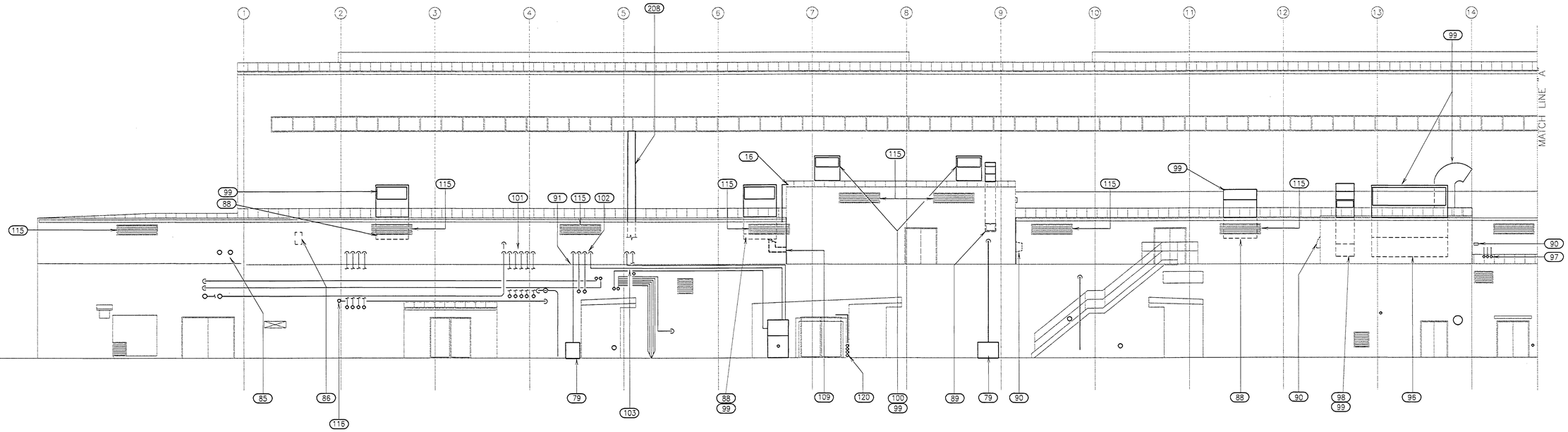

SOUTH ELEVATION – PART 1

SCALE= 1:100

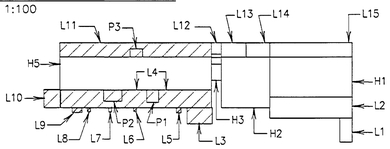

BUILDING 4619

KEY PLAN

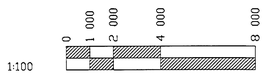

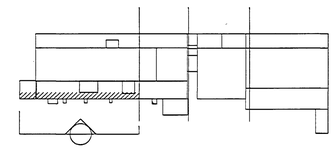

KEY PLAN

ALABAMA REGISTERED PROFESSIONAL ENGINEER No. 15695 DOUGLAS SHIVELY

CONCURRENCE:
R A L 12/12/97

CONCURRENCE:
/ / /

CONCURRENCE:
/ / /

CONCURRENCE:
MAINTENANCE 12/23/1997

CONCURRENCE:
USING OFFICE / / /

CONCURRENCE:
ENVIRONMENTAL HEALTH / / /

CONCURRENCE:
SAFETY OFFICE 12/12/1997

CONCURRENCE:
COMMUNICATIONS OFFICE 12/11/97

TELECOMMUNICATIONS EQUIPMENT AFFECTED BY THIS CONTRACT WORK IS NOT TO BE ALTERED OR REMOVED BY THE CONTRACTOR. CONTACT THE COTR IN THE EVENT OF A CONFLICT.

REV.	BY	DATE	REVISION	C.I. NO.	APPROVED

NASA Marshall Space Flight Center
Huntsville, Alabama 35812

REPAIR NORTHWEST AND SOUTHWEST LOW ROOFS
OF STRUCTURES & DYNAMICS LABORATORY (4619)

PARTIAL SOUTH ELEVATION – 1

AE FIRM: TIPPETT CLEPPER ASSOCIATES			NASA AE CONTRACT NO. NASA 8-39884
SUBMITTED	APPROVAL RECOMMENDED Michael Reynolds		APPROVED CHIEF, ENGINEERING DIVISION
RD: DATE: 10/15/97	A321 DATE: 12/18/97		A941 DATE:
REF. NO.	DESIGNED GFG	APPROVAL RECOMMENDED RCS	DWG NO
M3	DRAWN DBD	CHIEF, MECH/ELECT BRANCH	FAC-EB-4619-M3
	CHECKED WDS	DESIGN DATE:	
	SCALE: 1:100	SPEC. NO. M4125	

DATE: 10/13/97 TIME: 14:03
USER: GFG/GFG
FILE: G:\43N191.PRJ\C4C1MM3

ARCHITECTURAL INFORMATION
11/15/96 11:11 SAT 0x0
K:\43N191.PRJ\C4C1

MSFC MASTER BID DISK 11-18-2013

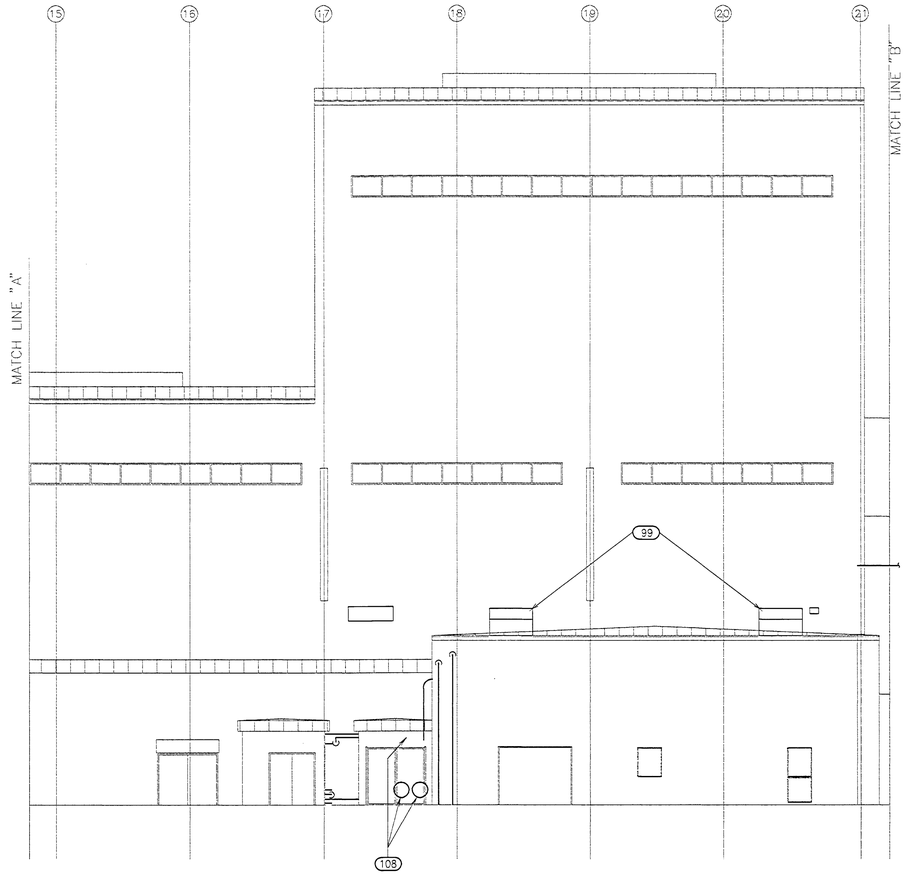

SOUTH ELEVATION – PART 2

SCALE= 1:100

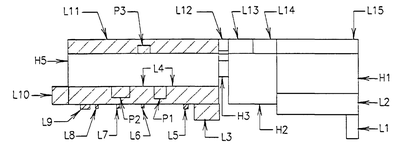

BUILDING 4619

KEY PLAN

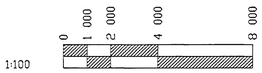

1:100

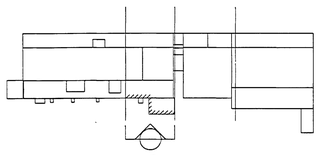

KEY PLAN

CONCURRENCE: R.A.L. 12/18/97					
CONCURRENCE: / / / /					
CONCURRENCE: / / / /					
CONCURRENCE: MAINTENANCE 12/23/1997	REV.	BY	DATE	REVISION	CI. NO.	APPROVED
CONCURRENCE: USING OFFICE / / / /						
CONCURRENCE: ENVIRONMENTAL HEALTH / / / /						
CONCURRENCE: SAFETY OFFICE 12/16/97						
CONCURRENCE: COMMUNICATIONS OFFICE 12/16/97						

NASA Marshall Space Flight Center
Huntsville, Alabama 35812

REPAIR NORTHWEST AND SOUTHWEST LOW ROOFS
OF STRUCTURES & DYNAMICS LABORATORY (4619)

PARTIAL SOUTH ELEVATION – 2

TELECOMMUNICATIONS EQUIPMENT AFFECTED BY THIS CONTRACT WORK IS NOT TO BE ALTERED OR REMOVED BY THE CONTRACTOR. CONTACT THE COTR IN THE EVENT OF A CONFLICT.

AE FIRM: TIPPETT CLEPPER ASSOCIATES			NASA AE CONTRACT NO. NASA 8-39884
SUBMITTED		APPROVAL RECOMMENDED	APPROVED
RD. DATE: 10/15/97		ABDT DATE: 12/18/97	ABM DATE: CHIEF ENGINEERING DIVISION
REF. NO.	DESIGNED GFG	APPROVAL RECOMMENDED RCG	DWG NO
M4	DRAWN DBD	CHIEF, MEDIA/ELECT BRANCH	FAC-EB-4619-M4
	CHECKED WDS	DESIGN DATE:	
	SCALE: 1:100	SPEC NO. M4125	

DATE: 10/15/97 TIME: 14:08
USER: GFG
FILE: Q:\93M191.PRJ\CAD\M4M4

ARCHITECTURAL INFORMATION
11/15/96 14:30 SAT
K:\JOB\M191.PRJ\C401
0x0

MSFC MASTER BID DISK 11-18-2013

NOTE	DESCRIPTION	ACTION	OTHER
74	EXISTING HOODS & GOOSENECK 760mm X 760mm (2 EACH) - HOOD 1525mm X 760mm (1 EACH) - GOOSENECK	EXTEND NEW DUCTWORK THROUGH NEW ROOF AND PROVIDE NEW HOODS AND GOOSENECK.	NOTE 2
75 THRU 78	NOT USED		
79	EXISTING N2 PIPE VENT AND BOX: 150mm PIPE, (EACH), 635mm X 915mm X 610mm METAL BOX	REMOVE AND EXTEND NEW PIPE THROUGH WALL. INSTALL BOX AND VENT BEYOND NEW WALL.	NOTE 1, 20
80 THRU 84	NOT USED		
85	EXISTING PIPES: 310mm & 360mm	REWORK PIPING TO ACCOMODATE NEW WALL AND NEW ROOF.	NOTE 1, 3
86	EXISTING ACCESS DOOR: 610mm X 1220mm	REMOVE ACCESS PANEL AND INSTALL NEW ACCESS DOOR IN NEW WALL.	SEE ARCHITECTURAL FOR ADDITIONAL DETAILS.
87	NOT USED		
88	EXISTING LOUVER: 915mm X 1830mm (EACH)	EXTEND NEW DUCTWORK THROUGH NEW ROOF TO NEW DUCTWORK ELBOW WITH NEW LOUVER.	NOTE 2
89	EXISTING LOUVER: 610mm X 610mm (EACH)	EXTEND NEW DUCTWORK THROUGH NEW ROOF TO NEW GOOSENECK	NOTE 2
90	EXISTING SENSOR (EACH)	REPLACE EXISTING WITH NEW AND EXTEND NEW TEMPERATURE BULB SENSOR FROM CONTROL PANEL TO NEW EXTERIOR WALL WITH NEW SUN SHIELD.	TEMPERATURE BULB CHARACTERISTICS TO MATCH EXISTING.
91	EXISTING PIPES: 40mm (2 EACH), 100mm (2 EACH)	REWORK AND EXTEND NEW PIPING TO ACCOMODATE NEW WALLS. INSULATE AND JACKET PIPING THROUGH NEW WALL.	NOTE 23, 1
92	EXISTING PIPES: 15mm (1 EACH), 25mm (1 EACH), 50mm (2 EACH), 100mm (1 EACH)	EXTEND NEW PIPING THROUGH NEW WALL AND ROOF.	NOTE 1
93 THRU 95	NOT USED		
96	EXISTING LOUVER: 1220mm X 3350mm (EACH)	EXTEND NEW DUCTWORK THROUGH NEW ROOF TO NEW GOOSENECK	NOTE 2
97	EXISTING PIPE: 50mm (3 EACH)	EXTEND NEW PIPE VENTS THROUGH NEW WALL AND NEW ROOF.	NOTE 1
98	EXISTING LOUVER: 510mm X 410mm (EACH)	EXTEND NEW DUCTWORK THROUGH NEW ROOF TO NEW GOOSENECK	NOTE 2
99	NEW GOOSENECKS AND DUCTED ELL TO LOUVERS	NEW LOUVER SIZE TO MATCH EXISTING. NEW DUCT ARRANGEMENT PER SMACNA.	NOTE 2
100	NEW GOOSENECKS	NEW DUCTWORK PER SMACNA.	NOTE 18 ,2
101	EXISTING PIPING		NOTE 14
102	EXISTING PIPING		NOTE 23
103	EXISTING PIPING		NOTE 23
104	NEW DUCTWORK 915mm X 460mm		NOTE 2, 109
105 THRU 107	NOT USED		
108	EXISTING DUCTWORK: 350mm (2 EACH) EXISTING PIPES: 50mm (4 EACH) EXISTING FANS: (2 EACH)	REMOVE PIPE AND CAP BEHIND NEW WALL. REMOVE DUCTWORK REMOVE AND RELOCATE FANS BEYOND NEW WALL.	NOTE 2
109	EXISTING LOUVER 915mm X 460mm (EACH)	EXTEND NEW DUCTWORK THROUGH NEW ROOF TO NEW GOOSENECK.	NOTE 2, 104
110 THRU 114	NOT USED		
115	NEW LOUVERS (TYPICAL)	SPECIFIED BY ARCHITECTURAL.	SEE GENERAL NOTE G.
116	EXISTING PIPE 130mm (EACH)	NEW PIPE INSULATION AND JACKET AT NEW WALL PENETRATIONS.	NOTE 1
117	EXISTING ANTENNA (6 EACH) MISCELLANEOUS LOCATIONS	REMOVE ANTENNAS AND PROVIDE TEMPORARY SUPPORTS FOR ANTENNAS DURING CONSTRUCTION. REINSTALL ANTENNAS AFTER COMPLETION OF ROOF.	NOTE 1
118 THRU 130	NOT USED		
131	EXISTING SIGNAL CONTROL CABLES: (15 EACH)	REMOVE AND REPLACE THROUGH NEW WALL.	SEAL PENETRATIONS WATERTIGHT.
132 THRU 189	NOT USED		
190	EXISTING PIPE: 50mm (EACH)	EXTEND NEW PIPING THROUGH NEW WALL AND NEW ROOF.	NOTE 1
191	EXISTING PIPE: 25mm (1 EACH) 100mm (1 EACH)	EXTEND NEW PIPING THROUGH NEW WALL AND NEW ROOF.	NOTE 1
192 THRU 195	NOT USED		

NOTE	DESCRIPTION	ACTION	OTHER
196	EXISTING PIPE: 100mm (EACH)	EXTEND NEW PIPING THROUGH NEW WALL AND NEW ROOF.	NOTE 1
197	EXISTING PIPE: 50mm (EACH)	EXTEND NEW PIPE THROUGH NEW WALL AND NEW ROOF.	NOTE 1
198	NOT USED		
199	EXISTING PIPE: 130mm (EACH)	EXTEND NEW PIPE THROUGH NEW WALL AND NEW ROOF.	NOTE 1
200 THRU 202	NOT USED		
203	EXISTING LOUVER: 2440mm X 1220mm (EACH)	REMOVE LOUVER, EXTEND NEW DUCTWORK UP AND OVER NEW ROOF, AND PROVIDE NEW LOUVER.	NOTE 2
204 THRU 207	NOT USED		
208	EXISTING SHEETMETAL FLUE 305mm (EACH)	EXTEND NEW FLUE THROUGH NEW ROOF, SUPPORT FROM WALL. FLASH TO ROOF AND WATERPROOF PENETRATION.	NOTE 23, 2

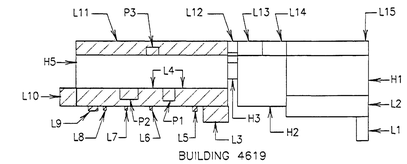

BUILDING 4619

KEY PLAN

ALABAMA REGISTERED PROFESSIONAL ENGINEER No. 15695 KAREN DOUGLAS SHIVER

CONCURRENCE:
R. Ahn 12/12/97
CONCURRENCE:
/ / / /
CONCURRENCE:
/ / / /
CONCURRENCE:
MAINTENANCE 12/12/1997
CONCURRENCE:
USING OFFICE / / / /
CONCURRENCE:
ENVIRONMENTAL HEALTH / / / /
CONCURRENCE:
SAFETY OFFICE 12/12/97
CONCURRENCE:
COMMUNICATIONS OFFICE 12/12/1997

TELECOMMUNICATIONS EQUIPMENT AFFECTED BY THIS CONTRACT WORK IS NOT TO BE ALTERED OR REMOVED BY THE CONTRACTOR. CONTACT THE COTR IN THE EVENT OF A CONFLICT.

REV.	BY	DATE	REVISION	C.I. NO.	APPROVED

NASA MARSHALL SPACE FLIGHT CENTER
HUNTSVILLE, ALABAMA 35812

REPAIR NORTHWEST AND SOUTHWEST LOW ROOFS
OF STRUCTURES & DYNAMICS LABORATORY (4619)
NOTES

AE FIRM: TIPPETT CLEPPER ASSOCIATES		NASA AE CONTRACT NO. NASA 8-39884
SUBMITTED:	APPROVAL RECOMMENDED:	APPROVED: CHIEF, ENGINEERING DIVISION
REF. NO.	RD. DATE: 10/15/97	A321 DATE: 12/12/97 A941 DATE:
M5	DESIGNED GFG DRAWN JGS CHECKED WDS SCALE: NONE	APPROVAL RECOMMENDED: CHIEF, MECH/ELECT BRANCH DESIGN DATE: SPEC. NO. M4125
		DWG NO FAC-EB-4619-M5

ARCHITECTURAL INFORMATION
11/15/96 11:13 SAT 0x0
K:\A9JN191.PRJ\C411

DATE: 10/13/97 TIME: 14:11
USER: GFG/GFG
FILE: Q:\9JN191.PRJ\C4TMANB

MSFC MASTER BID DISK 11-18-2013

ELECTRICAL LEGEND

	RACEWAY CONCEALED IN FLOOR OR UNDERGROUND
	RACEWAY CONCEALED IN CEILING CAVITY, SLAB, OR WALL
	RACEWAY TURNED UP
	RACEWAY TURNED DOWN
⊗ x ⊗ x	EXIT LIGHT, CEILING MOUNTED. DARKENED SECTIONS INDICATE FACES; ARROWS AS INDICATED. LETTER INDICATES FIXTURE TYPE. SEE SCHEDULE.
⊗ x ⊗ x	EXIT LIGHT, WALL MOUNTED. DARKENED SECTIONS INDICATE FACES; ARROWS AS INDICATED. LETTER INDICATES FIXTURE TYPE. SEE SCHEDULE.
S_T	MANUAL MOTOR STARTER, WITH THERMAL OVERLOAD PROTECTION

ABBREVIATIONS

C	CONDUIT
EC	EMPTY CONDUIT
FIX	FIXTURE
F	FUSED
G	GROUND
GFCI	GROUND FAULT CIRCUIT INTERRUPTER FOR PERSONNEL PROTECTION
JB	JUNCTION BOX
MH	METAL HALIDE
NC	NORMALLY CLOSED
NF	NONFUSIBLE
NO	NORMALLY OPEN
OC	ON CENTER
RECP	RECEPTACLE
SPDT	SINGLE POLE DOUBLE THROW
ST	SHUNT TRIP
XFMR	TRANSFORMER
WP	WEATHERPROOF

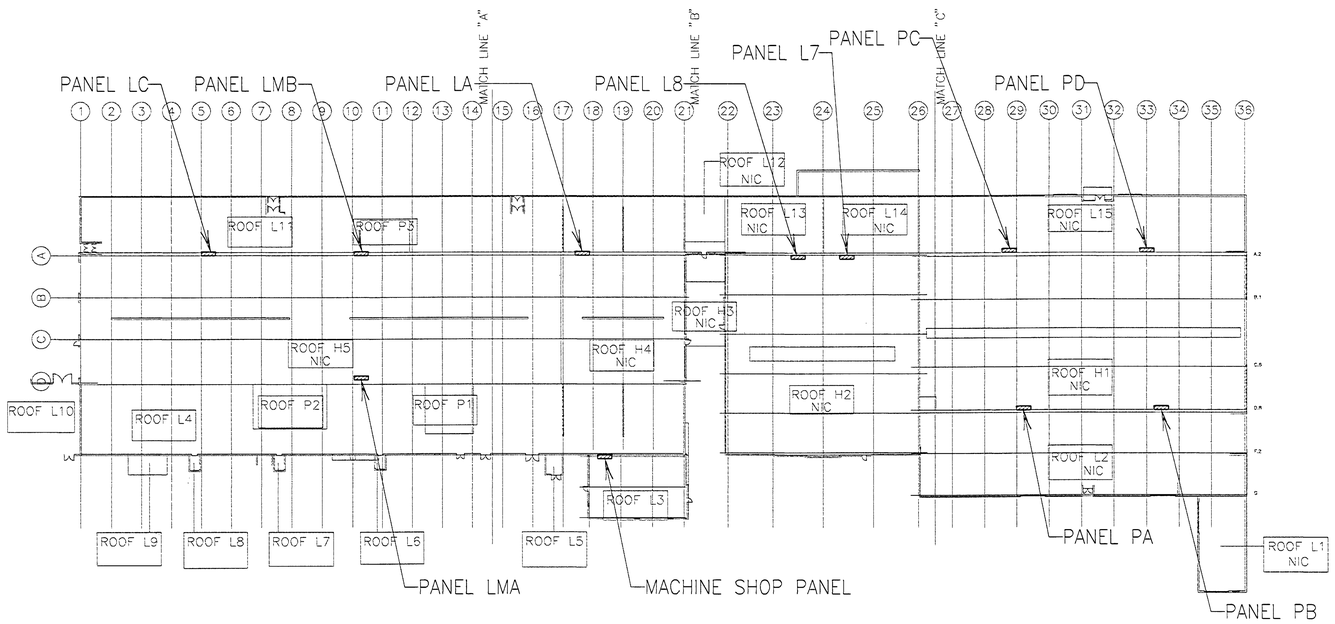

GENERAL NOTES

1. PROVIDE NEW WALL SLEEVES, SUPPORTS, WATERTIGHT SEALS, CAULKING, FLASHING AND COUNTER FLASHING TO MATCH NEW WALL PANEL, AND/OR ROOF COLOR. PENETRATIONS OF NEW WALL COVERING, FOR SUPPORT BRACKETS, FOR CONDUIT AND BUS DUCT, MUST BE COORDINATED WITH THE ARCHITECT.
2. CONTRACTOR SHALL BE RESPONSIBLE FOR LOCATING ELECTRICAL POWER SOURCE (IF ANY, AND DISCONNECTING POWER) FOR ALL CONDUIT OR PIPE TO BE TRIMMED, FLUSH, WITH EXISTING WALL, PRIOR TO ALTERATION. KNOWN PANEL SOURCES ARE LISTED AT THE LEFT OF THIS DRAWING.
3. EXISTING LIGHTNING PROTECTION IS TO BE REMOVED AND REINSTALLED USING EXISTING CONDUIT WITH NEW HARDWARE AND CONDUCTORS, MUST BE COORDINATED WITH THE AREAS REQUIRING NEW ROOFING.
4. ALL CONDUIT SIZES ARE INDUSTRY STANDARD SIZES, DESIGNATED BY THEIR NOMINAL,OR ACTUAL ( ) MILLIMETER (mm) DIAMETER EQUIVALENT..SEE CHART BELOW:

INCH	mm
1/2"	15 (13)
3/4"	20 (19)
1-1/4"	32
1-1/2"	40 (38)
2"	50
3"	80 (75)
3-1/2"	90
4"	100
5"	125
6"	150

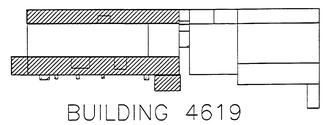

BUILDING 4619

KEY PLAN

CONCURRENCE:
R. A... 12/12/97
CONCURRENCE: / / /
CONCURRENCE: / / /
CONCURRENCE:
MAINTENANCE 12/23/97
CONCURRENCE:
USING OFFICE / / /
CONCURRENCE:
ENVIRONMENTAL HEALTH / / /
CONCURRENCE:
SAFETY OFFICE 12/16/97
CONCURRENCE:
COMMUNICATIONS OFFICE 12/16/97

TELECOMMUNICATIONS EQUIPMENT AFFECTED BY THIS CONTRACT WORK IS NOT TO BE ALTERED OR REMOVED BY THE CONTRACTOR. CONTACT THE COTR IN THE EVENT OF A CONFLICT.

REV.	BY	DATE	REVISION	C.I. NO.	APPROVED

NASA MARSHALL SPACE FLIGHT CENTER
HUNTSVILLE, ALABAMA 35812

ELECTRICAL NOTES & LEGENDS

AE FIRM: TIPPETT CLEPPER ASSOCIATES			NASA AE CONTRACT NO. NASA 8-39884
SUBMITTED:	APPROVAL RECOMMENDED: Michael Reynolds		APPROVED: CHIEF ENGINEERING DIVISION
RD: DATE: 10/15/97	ABR: DATE: 12/18/97		ASM: DATE:
DESIGNED JGS	APPROVAL RECOMMENDED:		DWG NO
DRAWN JGS	CHIEF, MECH/ELECT BRANCH		FAC-EB-4619-E1
CHECKED RMB	DESIGN DATE:		
SCALE:	SPEC NO. M4125		

REF. NO.

E1

ALABAMA REGISTERED PROFESSIONAL ENGINEER No. 15698 KAREN DOUGLAS SHIVER

ARCHITECTURAL INFORMATION
11/15/96 11:11 AM
K:\A03N191.PRA\C411
000

DATE: 10/13/97 TIME: 14:13
USER: JGS
DGN: K:\A03N191.PRA\CMTELCM

MSFC MASTER BID DISK 11-18-2013

NOTE	DESCRIPTION	ACTION
351	EXISTING FAN	TO BE RELOCATED TO NEW ROOF ABOVE.
352	EXISTING PHOTOCELL	REMOVE, AND REINSTALL, ON NEW ROOF.

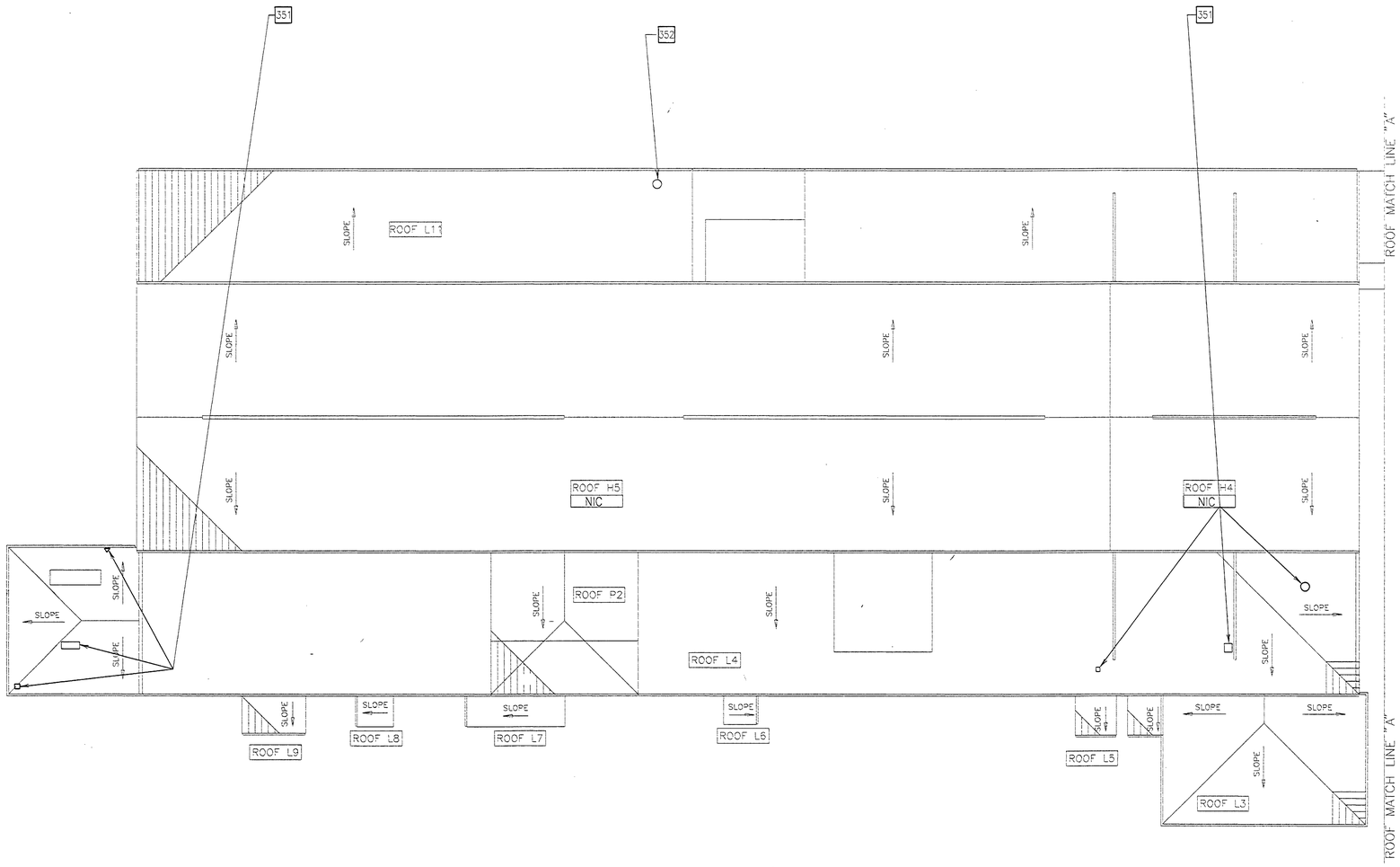

NOTE:

EXTEND EXISTING WIRE AND CONDUIT, AS REQUIRED, TO CONNECT ALL RELOCATED ELECTRICAL EQUIPMENT AND LIGHTS, SHOWN ON THIS DRAWING.

2/E2 PARTIAL ROOF PLAN – WEST

1:200

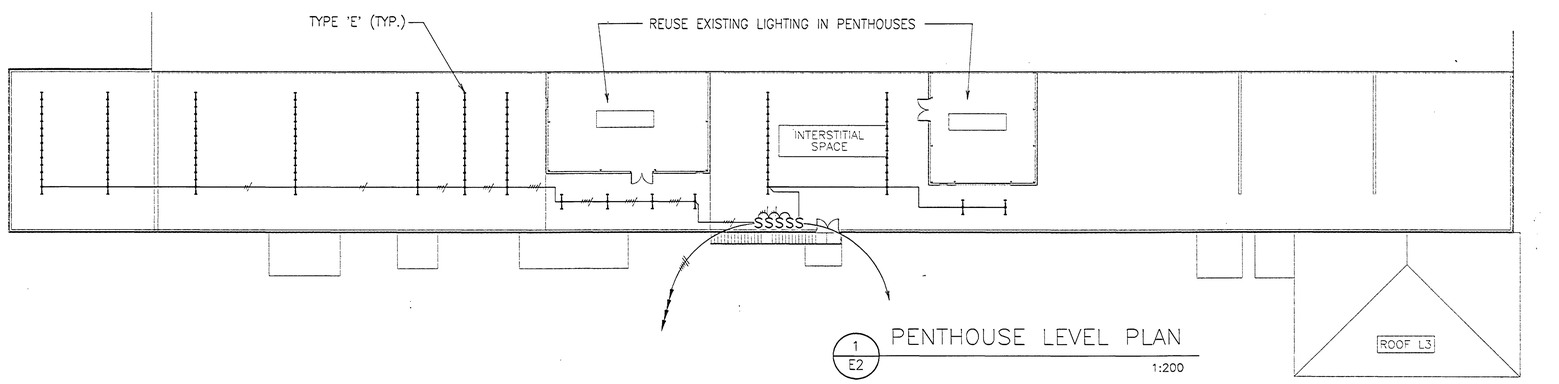

1/E2 PENTHOUSE LEVEL PLAN

1:200

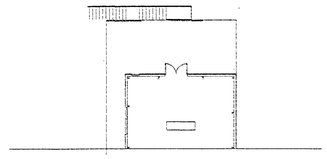

PENTHOUSE LEVEL PLAN

1:200

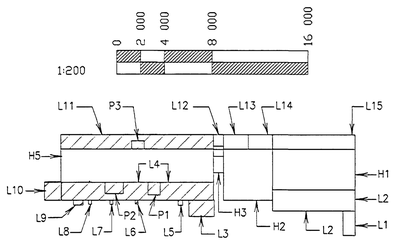

BUILDING 4619

KEY PLAN

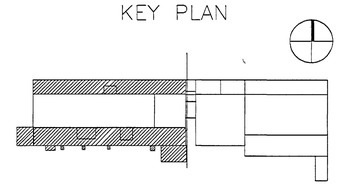

KEY PLAN

ALABAMA REGISTERED PROFESSIONAL ENGINEER No. 15696 KAREN DOUGLAS STATE

CONCURRENCE: R. A. 11/12/97							
CONCURRENCE: / / / /							
CONCURRENCE: / / / /							
CONCURRENCE: MAINTENANCE 11/12/97	REV.	BY	DATE	REVISION	CI. NO.	APPROVED	
CONCURRENCE: USING OFFICE / / / /							
CONCURRENCE: ENVIRONMENTAL HEALTH / / / /							
CONCURRENCE: SAFETY OFFICE 11/12/97							
CONCURRENCE: COMMUNICATIONS OFFICE 11/10/97							

TELECOMMUNICATIONS EQUIPMENT AFFECTED BY THIS CONTRACT WORK IS NOT TO BE ALTERED OR REMOVED BY THE CONTRACTOR. CONTACT THE COTR IN THE EVENT OF A CONFLICT.

NASA Marshall Space Flight Center
Huntsville, Alabama 35812

REPAIR NORTHWEST AND SOUTHWEST LOW ROOFS OF STRUCTURES & DYNAMICS LABORATORY (4619)

INTERSTITIAL SPACE AND ROOF PLAN

AE FIRM: TIPPETT CLEPPER ASSOCIATES			NASA AE CONTRACT NO. NASA 8-39884
SUBMITTED	APPROVAL RECOMMENDED Michael Reynolds		APPROVED CHIEF ENGINEERING DIVISION
REF. NO.	RD DATE: 10/15/97	A321 DATE: 12/18/97	A341 DATE:
E2	DESIGNED JGS DRAWN JGS CHECKED RMB SCALE: 1:200	APPROVAL RECOMMENDED CHIEF, MECH/ELECT BRANCH DESIGN DATE: SPEC NO. M4125	DWG NO FAC-EB-4619-E2

DATE: 10/13/97 TIME: 14:20
USER: GRG/GC #19
FILE: Q:\3N19\PRA\CWEELIG

MSFC MASTER BID DISK 11-18-2013

DOCUMENT INPUT RECORD - MSFC DOCUMENTATION REPOSITORY

I. GENERAL INFORMATION

1 APPROVED PROJECT:	2. DOCUMENT/ DRAWING NUMBER:	3. CONTROL NUMBER:	4. RELEASE DATE:	5. SUBMITTAL DATE:
	FAC-EB-4619		10/15/1997	11/14/2006

6. DOCUMENT/DRAWING TITLE:	7. REPORT TYPE:
REPAIR NW & SW LOW ROOFS	

8 CONTRACT NUMBER / PERFORMING ACTIVITY:	9. DRD NUMBER:	10. DPD / DRL / IDRD NUMBER:
NNM05AB09C		

11. DISPOSITION AUTHORITY (Check One):	12. SUBMITTAL AUTHORITY:	13. RELEASING AUTHORITY:
☐ Official Record - NRRS _____ ☒ Reference Copy - NRRS 8/5/A/3 (destroy when no longer needed)	KAREN FRANCIS / SEI AS22	

14 SPECIAL INSTRUCTIONS:

15 CONTRACTOR/SUBMITTING ORGANIZATION, ADDRESS AND PHONE NUMBER:	16. ORIGINATING NASA CENTER:
KAREN FRANCISSEI GROUP / AS22 BUILDING 4241, ROOM116 MSFC, AL 35/12 (256)-544-7942	
	17. OFFICE OF PRIMARY RESPONSIBILITY:

18. PROJECT CODE:	02400	19. NUMBER OF PAGES:	~~19~~ 20

II. ENGINEERING DRAWINGS

20. REVISION:	21. ENGINEERING ORDER:	22. PARTS LIST:	23. CCBD:
0			

III. REPORTS, SPECIFICATIONS, ETC.

24. REVISION:	25. CHANGE:	26. VOLUME:	27. BOOK:	28. PART:	29. SECTION:

30 ISSUE.	31. ANNEX:	32. SCN:	33. DCN:	34. AMENDMENT:

35 APPENDIX.	36. ADDENDUM.	37. CCBD:	38. CODE ID:	39. IRN:

IV. EXPORT AND DISTRIBUTION RESTRICTIONS

- ☐ Privacy Act (see MWI 1382.1)
- ☐ Proprietary (see MPD 2210.1, MPR 7120.3)
- ☐ Patent (see MPR 2220.1)
- ☐ ITAR (see MPR 2220.1, MPD 2190.1)
- ☐ EAR (see MPR 2220.1, MPD 2190.1)
- ☐ Other ACI (see NPR 1600.1, MPR 1600.1) _____
- ☒ No statutory or institutional restrictions applicable -- material may be electronically distributed to user in the NASA domain

V. DOCUMENTATION SUBMITTER (NASA OR CONTRACTOR)

40 ORG. CODE:	41. PHONE NUMBER:	42. NAME:	43. SIGNATURE/DATE:
SEI (AS22)	(256) 544-7942	KAREN FRANCIS	11/14/06

VI. TO BE COMPLETED BY MSFC DOCUMENTATION REPOSITORY

44. RECEIVED BY:	45. DATE RECEIVED:	46. WORK ORDER:
Annette Bradford	1/25/07	03-00381-7

MSFC MASTER BID DISK 11-18-2013

BUILDING 4619
TENSILE TEST LAB BUILDING ADDITION
MARSHALL SPACE FLIGHT CENTER, ALABAMA

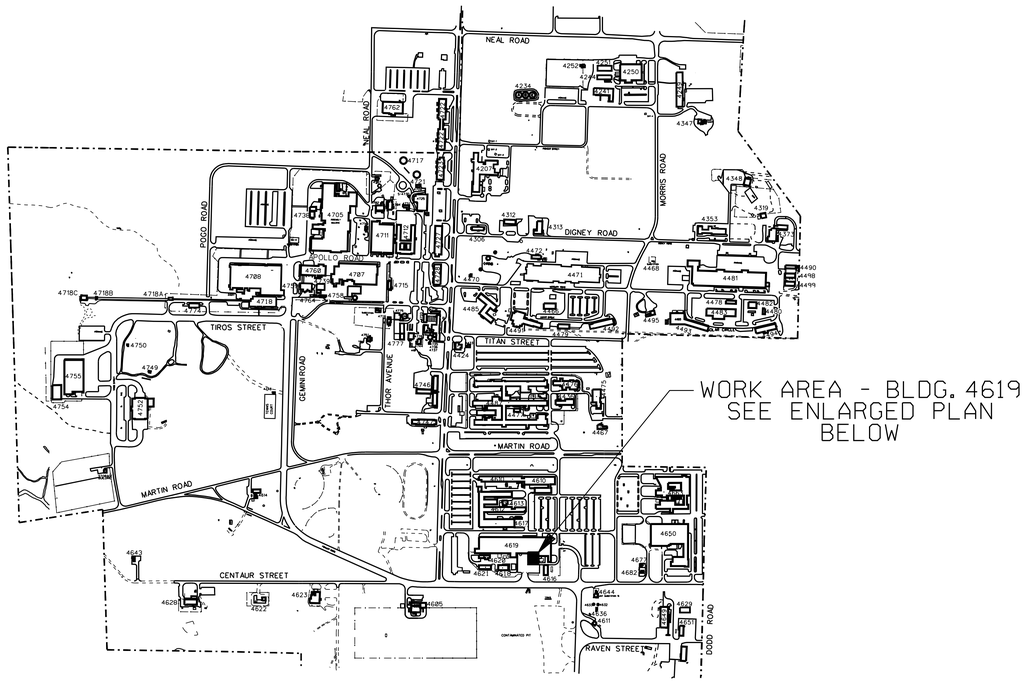

FACILITIES SITE MAP
N-T-S
(SEE SHEET S-1 FOR
PROJECT PLAN NOTES)

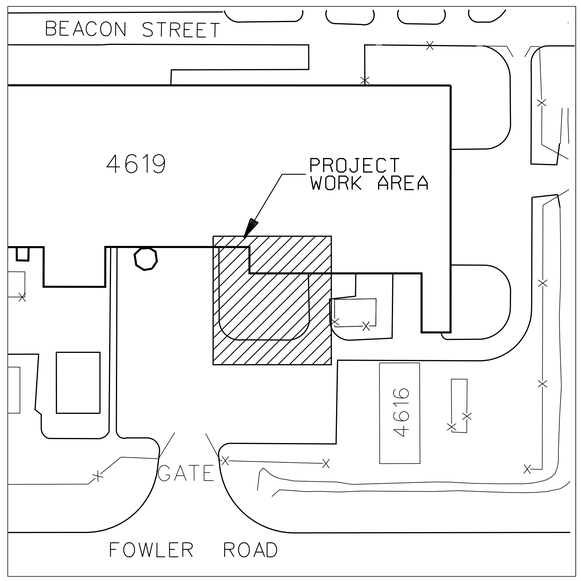

BUILDING 4619
PARTIAL KEY PLAN
N.T.S

INDEX OF DRAWINGS

REF. NO.	SHEET TITLE	DRAWING NO.	REV.
X1	DRAWING INDEX - SITE MAP	FAC-FF-4619-X1	
	CIVIL		
C1	PLAN, DETAILS, NOTES	FAC-FF-4619-C1	
	ARCHITECTURAL		
A1	FLOOR PLANS, NOTES, DETAILS	FAC-FF-4619-A1	
A2	ELEVATIONS, ROOF PLAN, & DETAILS	FAC-FF-4619-A2	
A3	SECTIONS, DETAILS, DOOR SCHEDULE	FAC-FF-4619-A3	
A4	DOOR DETAILS	FAC-FF-4619-A4	
A5	DOOR SECTIONS, MISC. DETAILS	FAC-FF-4619-A5	
	STRUCTURAL		
S1	GENERAL NOTES	FAC-FF-4619-S1	
S1-D	DEMOLITION REQMENTS. PHOTOS	FAC-FF-4619-S1D	
S2	FOUNDATION PLAN & DETAILS	FAC-FF-4619-S2	
S3	FOUNDATION DETAILS	FAC-FF-4619-S3	
S4	STEEL FRAMING PLAN & ELEVATIONS	FAC-FF-4619-S4	
S5	STEEL FRAMING SECTIONS & DETAILS	FAC-FF-4619-S5	
S6	PIT FLOOR FRAME SECTIONS & DETAILS	FAC-FF-4619-S6	
S7	STANDING SEAM ROOF PLAN & TYPICAL DETAILS	FAC-FF-4619-S7	
S8	HVAC PLATFORM DETAILS	FAC-FF-4619-S8	

REF. NO.	SHEET TITLE	DRAWING NO.	REV.
	MECHANICAL		
M1	MECHANICAL PLAN, SECTION, & DETAILS	FAC-FF-4619-M1	
M2	MECHANICAL DETAILS, AHU SCHEDULES & SEQUENCE OF OPERATION	FAC-FF-4619-M2	
	ELECTRICAL		
E1	REMOVAL PLAN & POWER PLAN	FAC-FF-4619-E1	
E2	LIGHTING PLAN & LIGHTNING PROTECTION PLAN	FAC-FF-4619-E2	
E3	OXYGEN MONITORING SYSTEM PLAN	FAC-FF-4619-E3	
E4	POWER PLAN AND NOTES	FAC-FF-4619-E4	
	FIRE PROTECTION		
FP1	SPRINKLER PLAN, DETAILS & NOTES	FAC-FF-4619-FP1	
	UCS		
UCS1	UCS: EQUIPMENT LOCATIONS, WIRING & NOTES	FAC-FF-4619-UCS1	
UCS2	UCS SKS	FAC-FF-4619-UCS2	
UCS3	UCS SKS	FAC-FF-4619-UCS3	
UCS4	UCS SKS	FAC-FF-4619-UCS4	

SUMMARY STATEMENT OF WORK

WORK ON THIS PROJECT CONSISTS OF, BUT IS NOT NECESSARILY LIMITED TO, THE FOLLOWING:

* DEMOLITION OF PORTIONS OF BLDG. 4619, AND ITS ADJACENT PAVEMENT AND GROUNDS
* REGRADING OF ADJACENT GROUNDS, AND REPAVING OF DISTURBED PAVED AREAS
* REPLANTING AND SODDING OF AFFECTED GRASSY AREAS
* POURING OF NEW BUILDING FOUNDATION AND SLAB
* POURING NEW EQUIPMENT PADS AS SHOWN
* FABRICATION AND ERECTION OF A NEW, STEEL-FRAMED BUILDING ADDITION WITH A STRUCTURAL STANDING SEAM ROOF
* CLADDING NEW WALLS WITH PVC PANELS TO MATCH EXISTING ASBESTOS-CEMENT PANELS
* INSTALL NEW ROLL-UP AND PERSONNEL DOORS
* INSTALL NEW SUSPENDED ACOUSTICAL CEILING
* PAINTING NEW, AND AFFECTED EXISTING CONSTRUCTION, BOTH INTERIOR AND EXTERIOR
* INSTALLATION OF NEW HVAC EQUIPMENT, DUCTWORK, AND CONTROLS
* TESTING AND BALANCING OF MODIFIED HVAC SYSTEM
* INSTALLATION OF NEW ELECTRICAL POWER, RECEPTACLES, AND LIGHTING, AS SHOWN
* INSTALLATION OF NEW UCS SENSORS AND CONTROLS, AS SHOWN
* INSTALLATION OF A NEW UPS FOR THE UCS CONTROLS
* INSTALLATION OF NEW SPRINKLER SYSTEM COMPONENTS, AS SHOWN
* REPROGRAMMING OF CENTRAL FIRE ALARM GRAPHIC DISPLAY SYSTEM

WORK SPECIFICALLY EXCLUDED FROM THIS PROJECT CONSISTS OF THE FOLLOWING:

* REMOVAL OF PROCESS EQUIPMENT AND FURNISHINGS FROM OCCUPIED AREAS
* REMOVAL OF EXISTING EXTERIOR CABLE TRAY AND CONTENTS
* INSTALLATION OF PROCESS AND TEST EQUIPMENT
* INSTALLATION OF PROCESS PIPING AND WIRING FOR TEST EQUIPMENT

ASBESTOS & LEAD COATINGS NOTE

THE EXISTING BUILDING EXTERIOR WALL PANELS CONTAIN ASBESTOS-FIBERED CEMENT, AND THE EXISTING STEEL FRAMING HAS LEAD-BEARING COATINGS.

REDUCED SIZE DRAWING
DO NOT SCALE

CADD DRAWING
CHANGES TO THIS DRAWING SHALL BE MADE ON CADD ONLY.
477159 / 08-18-03 / DWA
LATEST CADD UPDATE: 12-05-05 03:00 PM
BY: SAMANIEGO

CONCURRENCE: DATE:
AD21 PLANNING OFFICE
CONCURRENCE: DATE:
AD22 PROJECT MANAGER
CONCURRENCE: DATE: 02-24-04
JOE P. EDMONDSON
AD10 ENVIRONMENTAL ENGINEERING DEPT
CONCURRENCE: DATE:
USING OFFICE
CONCURRENCE: DATE: 02-20-04
JAMES K. SHARP
AD24 OPERATIONS & MAINTENANCE GROUP
CONCURRENCE: DATE: 02-20-04
SCOTT PINKSTON
AD60 ENVIRONMENTAL HEALTH
CONCURRENCE: DATE: 02-24-04
DENNIS S. DAVIS
GD50 SAFETY OFFICE
CONCURRENCE: DATE: 02-20-04
CHARLES B. WINKLER
AD32 COMMUNICATIONS OFFICE
TELECOMMUNICATIONS EQUIPMENT AFFECTED BY THIS CONTRACT WORK IS NOT TO BE ALTERED OR REMOVED BY THE CONTRACTOR. CONTACT THE CO10 IN THE EVENT OF A CONFLICT
REF.NO. X-1 OF 1

REV.	BY	DATE	REVISION	C.I. NO.	APPROVED
1	RTS		AS-BUILT		

Marshall Space Flight Center
Huntsville, Alabama 35812

WORK REQUEST NO. 477159

BUILDING 4619
TENSILE TEST LAB BUILDING ADDITION
DRAWING INDEX -SITE MAP

AE FIRM: AJT & ASSOCIATES, INC. HUNTSVILLE - ALABAMA		NASA AE CONTRACT NO. NAS8-00144
SUBMITTED: DAVID A. SELLERS	APPROVAL RECOMMENDED: DAVID L. MARTIN	APPROVED: R. B. FELDER
AE: DATE: 01-21-04	AD22 PROJ. A/E DATE: 02-23-04	AD22 GROUP LEAD DATE: 02-26-04
DESIGNED: D. ANDERSON	APPROVAL RECOMMENDED: ROBERT S. TALIANKO AJT & ASSOCIATES, INC.	DRAWING NO. FAC-FF-4619-X1
DRAWN: D. ANDERSON	AD22 TEAM LEAD DATE: 02-26-04	
CHECKED: D. SELLERS		
SCALE: AS NOTED	SPEC. NO. TSRC-5	SHEET 1 OF 27

MSFC-FORM 232 REV. 8-21-89-MCL

MSFC MASTER BID DISK 11-18-2013

LEGEND:

✱ 580.00 EXISTING SPOT ELEVATION

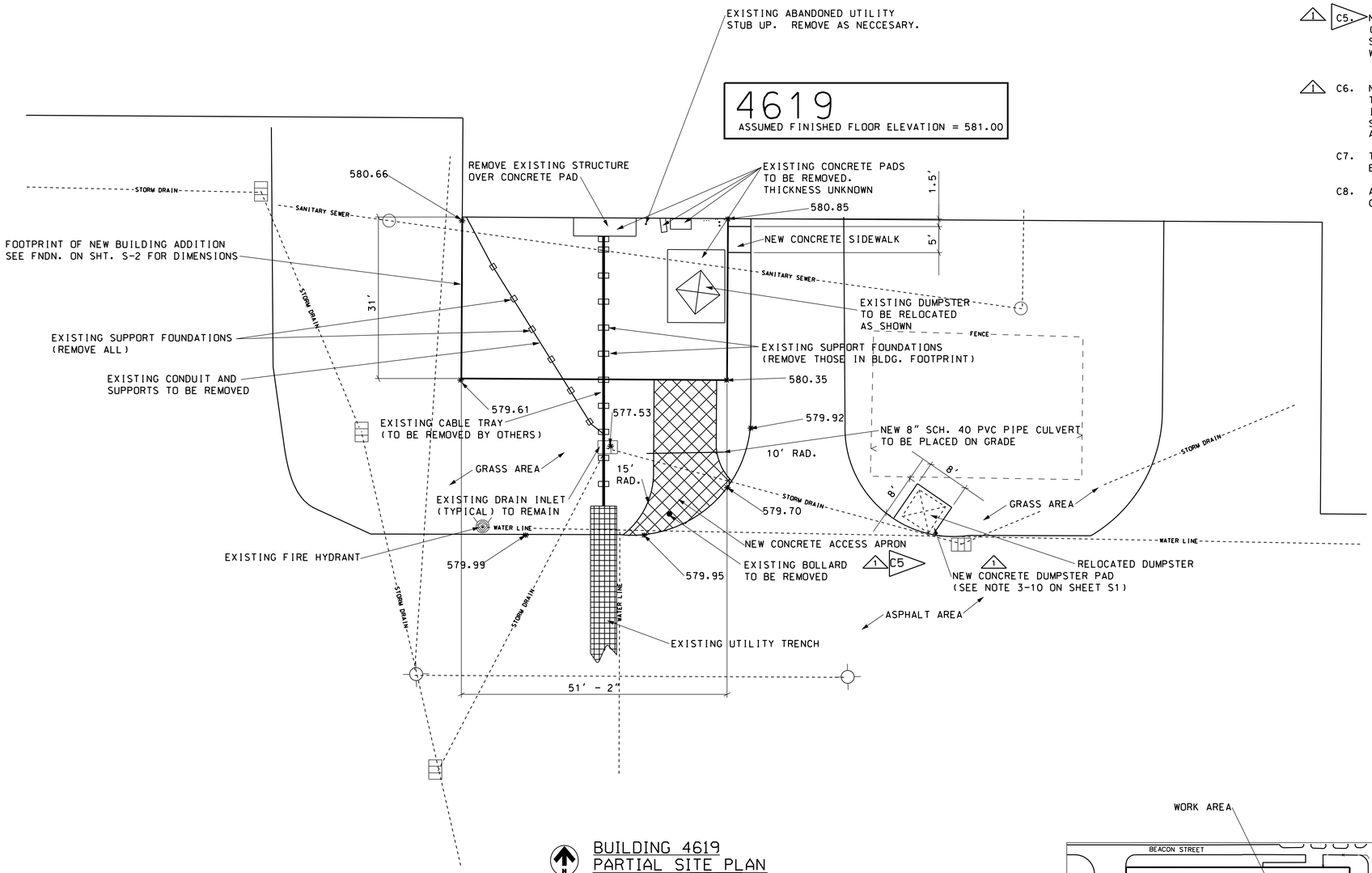

BUILDING 4619
PARTIAL SITE PLAN
SCALE: 1" = 10'
0 5 10

CIVIL NOTES:

C1. CONTRACTOR SHALL VERIFY ALL DIMENSIONS AND CONDITIONS PRIOR TO CONSTRUCTION.

C2. PRIOR TO BEGINNING CONSTRUCTION, CONTRACTOR SHALL OBTAIN A DIG PERMIT BY CONTACTING NASA AD22. (OSCAR FORD AT 544-6759)

C3. CONTRACTOR SHALL LOCATE AND MAP WITHIN THE WORK AREA ALL NEW UTILITY LINES AND UNDOCUMENTED EXISTING UTILITY LINES UNCOVERED DURING CONSTRUCTION. REFERENCE EACH UTILITY LINE'S HORIZONTAL LOCATION TO THE NEAREST BUILDING OR PERMANENT STRUCTURE BY TWO DIMENSIONS FOR EACH REFERENCE POINT. NOTE VERTICAL ELEVATIONS WITH RESPECT TO A MONUMENT OR A BUILDING'S FINISHED FLOOR ELEVATION. CONTRACTOR SHALL SUBMIT THESE NOTATIONS TO THE CONTRACTING OFFICER'S TECHNICAL REPRESENTATIVE (COTR) PRIOR TO COMPLETION OF JOB.

C4. CONTRACTOR SHALL STOCKPILE ALL SOIL REMOVED ON SITE AND USE IT FOR NON-STRUCTURAL BACKFILL AROUND NEW BUILDING ADDITION. BACKFILL SHALL BE PLACED TO DIVERT STORMWATER RUNOFF INTO EXISTING DRAINAGE INLET. SOD ALL DISTURBED AREAS.

1 C5. NEW CONCRETE ACCESS APRON SHALL HAVE A MINIMUM OF 6" CRUSHED STONE AGGREGATE (AHD #57 AND #78) COMPACTED TO THE SATISFACTION OF THE COTR. THE AGGREGATE SHALL BE TOPPED WITH A 6" THICK CONCRETE SLAB. ACCESS APRON SHALL BE FOURTEEN FEET WIDE, CENTERED ON ROLL-UP DOOR OPENING.

1 C6. NEW CONCRETE SIDEWALK SHALL BE CONSTRUCTED WITH WW 2.9 X 2.9 6 X6 WWR PLACED TWO INCHES UNDER THE SURFACE. CONCRETE SHALL BE SIX INCHES THICK AND HAVE THREE INCHES OF STONE BENEATH COMPACTED TO THE SATISFACTION OF THE COTR. CONCRETE SHALL BE 3000 PSI. NEW CONCRETE DUMPSTER PAD SHALL BE OF SAME CONSTRUCTION, AND ALSO INCLUDE FIBER MESH REINFORCING PER SHEET S-1, NOTE #3-10.

C7. TOP OF STRUCTURAL FILL ELEVATION SHALL BE 579.83. ANY ADDITIONAL FILL NEEDED SHALL BE BROUGHT IN FROM OFF SITE.

C8. AFTER CONSTRUCTION OF BUILDING ADDITION IS COMPLETE, PATCH AND REPAIR CONSTRUCTION AREA TO ORIGINAL CONDITION AS A MINIMUM.

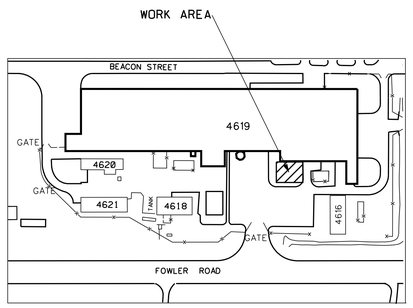

BUILDING 4619
KEY PLAN
N.T.S

1 REFERENCE DESIGN CHANGES REVIEWED FOR INCORPORATION

RFI-04, RFI-05

REDUCED SIZE DRAWING
DO NOT SCALE

CADD DRAWING
CHANGES TO THIS DRAWING SHALL BE MADE ON CADD ONLY.
477159 12-08-03 WDG
LATEST CADD UPDATE: 05-02-07 08:00 AM
BY: SAMANIEGO

CONCURRENCE:	DATE:
CONCURRENCE:	DATE:
CONCURRENCE:	DATE:
AD21 PLANNING OFFICE	
CONCURRENCE:	DATE:
AD22 PROJECT MANAGER	
CONCURRENCE:	DATE: 02-24-04
JOE P. EDMONDSON	
AD10 ENVIRONMENTAL ENGINEERING DEPT	
CONCURRENCE:	DATE:
USING OFFICE	
CONCURRENCE:	DATE: 02-20-04
JAMES K. SHARP	
AD23 OPERATIONS & MAINTENANCE GROUP	
CONCURRENCE:	DATE: 02-20-04
SCOTT PINKSTON	
AD02M ENVIRONMENTAL HEALTH	
CONCURRENCE:	DATE: 02-24-04
DENNIS S. DAVIS	
OS10 SAFETY OFFICE	
CONCURRENCE:	DATE: 02-20-04
CHARLES B. WINKLER	
AD32 COMMUNICATIONS OFFICE	

TELECOMMUNICATIONS EQUIPMENT AFFECTED BY THIS CONTRACT WORK IS NOT TO BE ALTERED OR REMOVED BY THE CONTRACTOR. CONTACT THE COTR IN THE EVENT OF A CONFLICT

REF. NO. C-1 OF 1

REV.	BY	DATE	REVISION	C.I. NO.	APPROVED
1	RTS	12-05-05	AS-BUILT PER RED LINED DRAWINGS		

Marshall Space Flight Center
Huntsville, Alabama 35812

WORK REQUEST NO. 477159

BUILDING 4619

TENSILE TEST LAB BUILDING ADDITION

CIVIL SITE PLAN, NOTES

AE FIRM: AJT & ASSOCIATES, INC. HUNTSVILLE - ALABAMA		NASA AE CONTRACT NO. NAS8- 00144
SUBMITTED: DAVID A. SELLERS	APPROVAL RECOMMENDED: DAVID L. MARTIN	APPROVED: R. B. FELDER
AE: DATE: 01-21-04	AD22 PROJ. A/E DATE: 02-23-04	AD22 GROUP LEAD DATE: 02-26-04
DESIGNED: D. GRIMWOOD	APPROVAL RECOMMENDED: ROBERT S. TALIANKO AJT & ASSOCIATES, INC.	DRAWING NO.
DRAWN: D. GRIMWOOD		FAC-FF-4619-C1
CHECKED: D. ANDERSON	AD22 TEAM LEAD DATE: 02-26-04	
SCALE: AS NOTED	SPEC. NO. FAC TSRC-5	SHEET 2 OF 27

MSFC-FORM 232 REV. 8-21-95-RCL

MSFC MASTER BID DISK 11-18-2013

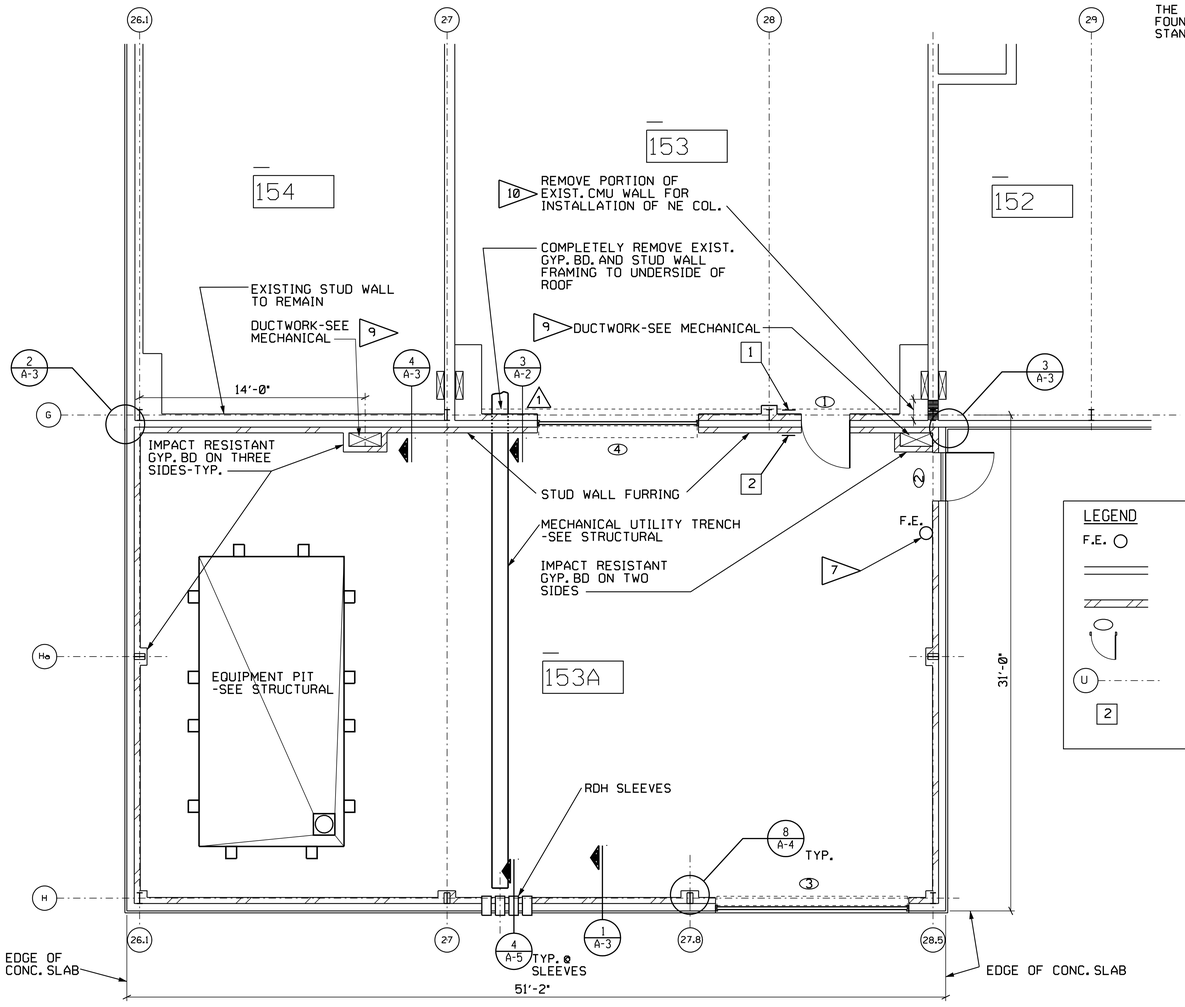

FLOOR PLAN

SCALE: 1/4" = 1'-0" 0 2' 4' 6'

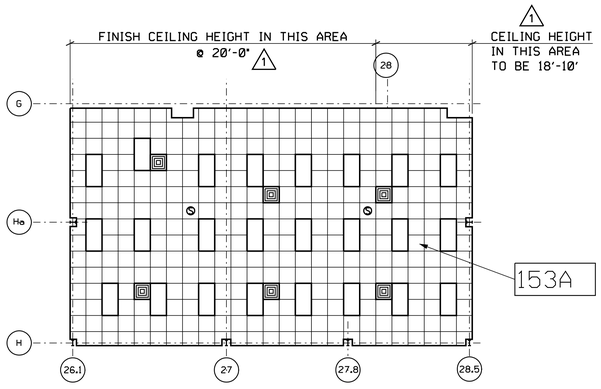

REFLECTED CEILING PLAN

SCALE: 1/8" = 1'-0" 0 4' 8' 12'

REFLECTED CEILING PLAN LEGEND	
	2 X 2 LAY-IN CEILING
	2 X 2 FLUORESCENT LIGHT
	2 X 4 FLUORESCENT LIGHT
	SUPPLY AIR DIFFUSER
S	SMOKE DETECTOR

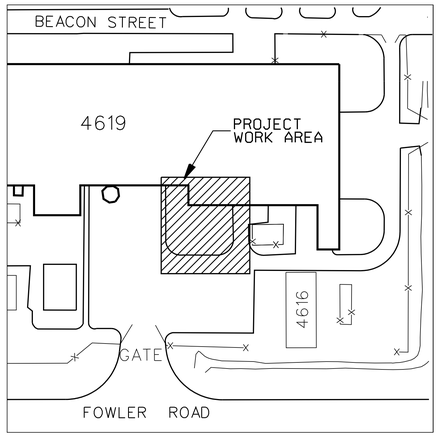

KEY PLAN

N.T.S.

ARCHITECTURAL SCOPE OF WORK

THE WORK CONSISTS OF CONSTRUCTING A STEEL FRAME BUILDING ON A CONCRETE FOUNDATION AND SLAB WITH EQUIPMENT PIT AND TRENCH, PVC SIDING, STANDING SEAM METAL ROOF, PEDESTRIAN DOORS AND ROLL-UP DOORS.

LEGEND

- F.E. ○ — FIRE EXTINGUISHER
- ═══ — EXISTING WALLS
- ▨ — NEW WALLS
- NEW DOORS
- (U) —·—·— COLUMN CENTERLINE
- [2] — ROOM SIGN SYMBOL -SEE SHEET A-3 FOR SIGN SCHEDULE

1 REFERENCE DESIGN CHANGES REVIEWED FOR INCORPORATION

RFI-02, RFI-07, RFI-10

ARCHITECTURAL NOTES

1. VERIFY ALL DIMENSIONS AND CONDITIONS AT THE SITE PRIOR TO CONSTRUCTION.
2. REPAIR OR REPLACE ALL WORK DAMAGED IN CONSTRUCTION TO PRODUCE A COMPLETELY FINISHED JOB.
3. PRETREAT NEW BUILDING FOUNDATIONS AND SLABS WITH APPROVED TERMITICIDE.
4. INTERIOR FINISHES: PAINT ALL NEW INTERIOR WALLS, DOORS AND DOOR TRIM.
   -GYPSUM WALL BOARD SHALL BE PAINTED WITH AN EGGSHEL FINISH. COLOR SHALL BE "ICI" 40YY 75/084, SEED PEARL.
   -PEDESTRIAN DOORS AND DOOR FRAMES: "ICI" 20YY 39/130, PALM SPRINGS TAN.
   -ROLL-UP DOORS: "SHERWIN WILLIAMS" SW 2134, PAVESTONE.
   -ROLL-UP DOOR FRAMES: "SHERWIN WILLIAMS" SW2139, SHIPYARD GRAY.
   -RUBBER BASE: "MARLEY FLEXCO" WF037, WALLFLOWERS DARK BEIGE.
   -SUSPENDED CEILING PANELS: ARMSTRONG MINABOARD DESIGNER, WHITE.
   EXTERIOR FINISHES: USE PREFINISHED ROOFING, SIDING AND TRIM. PAINT ALL NEW DOORS AND DOOR TRIM.
   -PEDESTRIAN DOORS, ROLL-UP DOOR FRAMES: "SHERWIN WILLIAMS" SW2139, SHIPYARD GRAY.
   -ROLL-UP DOOR, PEDESTRIAN DOOR FRAMES: "SHERWIN WILLIAMS" SW2134, PAVESTONE.
   LOUVERS: CLEAR ANODIZED ALUMINUM.
5. ROLL-UP DOOR- EQUAL TO "OVERHEAD DOOR" STORMTITE INSULATED SERVICE DOOR, SERIES 625 UFN, COLOR: DOVE GREY, WITH THE FOLLOWING FEATURES.
   A. CURTAIN SLATS - # F-265, 20 GA., GALVANIZED.
      - BACK COVER-24 GA., GALVANIZED.
      -INSULATION-FOAMED -IN-PLACE URETHANE FOR AN R VALUE OF 5.8 OR BETTER.
   B. OPERATION- DOOR SHALL BE ELECTRIC HOIST OPERATION WITH MANUAL HOIST BACKUP.
   C. LOCKING- DOOR SHALL LOCK THROUGH OPERATOR GEARING.
   D. WEATHERSTRIPPING- DOOR SHALL HAVE BOTTOM WEATHERSTRIP, EXTERIOR SURFACE GUIDE WEATHERSTRIP, AND INTERNAL HOOD BAFFLE WEATHERSTRIP AND WEATHERPROOF CONSTRUCTION BETWEEN HOOD AND WALL.
   E. OPERATOR CONTROL PUSH-BUTTON STATIONS. 24VAC CLASS 2, THREE-BUTTON OPEN/CLOSE/STOP CIRCUIT. INDOOR STATIONS SHALL BE OPEN/CLOSE/STOP IN NEMA 1 ENCLOSURE. EXTERIOR STATIONS SHALL BE OPEN/CLOSE/STOP WITH ON-OFF KEY SWITCH IN NEMA 4 ENCLOSURE.
6. CAUTION! EXISTING CORRUGATED SIDING CONTAINS ASBESTOS. WHERE DRILLING, SAWING OR CUTTING OF ASBESTOS CONTAINING MATERIALS OCCUR, PROPER PROCEDURES MUST BE USED PER TSRC-5, SECTION 01355..
7. FIRE EXTINGUISHER: EQUAL TO "LARSEN'S" MP10 MULTI-PURPOSE DRY CHEMICAL TYPE, UL RATED 4A-60B:C. PROVIDE STANDARD BRACKETS, ATTACH TO METAL BUILDING STUDS AT LOCATION SHOWN. PROVIDE BLOCKING AT BRACKET LOCATION FOR POSITIVE ATTACHMENT. LOCATE BRACKET APPROX. 4'-0" ABOVE FINISHED FLOOR.
8. EXISTING ROOF STRUCTURE CONSISTS OF A STANDING SEAM ROOF PANEL RETROFIT SYSTEM INSTALLED OVER A BUILT-UP ROOF ON METAL DECK. THE RETROFIT ROOF SYSTEM WAS MANUFACTURED BY AMERICAN BUILDINGS COMPANY. THE METAL PANELS ARE MODEL NUMBER SSII - 24 GA. WITH PREMIUM 70 (KYNAR 500) FINISH.
9. FURR WALL AROUND RETURN AIR DUCTWORK FROM FLOOR TO SIX INCHES ABOVE THE CEILING. PROVIDE 5/8" IMPACT RESISTANT GYP. BD. ON THREE SIDES-TYPICAL.
10. REMOVE PORTION OF EXIST. CMU FROM FLOOR TO ROOF STRUCTURE AS REQUIRED TO INSTALL NEW STRUCTURAL STEEL COLUMN (SEE STRUCTURAL). PROVIDE NEW CMU-INTERLOCKING WITH EXISTING PORTION OF CMU WALL-FROM FLOOR TO CEILING STRUCTURE.
11. 1 ROOF INSULATION: PROVIDE 2" THICK UNFACED FIBERGLASS BLANKETS IMMEDIATELY BELOW AND NEXT TO ROOF PANELS. USE "FOAMULAR" 150 T&G 2" THICK INSULATION @ 15 PSI COMPRESSIVE STRENGTH ON TOP OF 1 1/2" METAL DECK. ALL INSULATION IN SUCH A MANNER AS TO LEAVE NO GAPS BETWEEN NEW AND EXISTING ROOF INSULATION.
12. 1 PROVIDE MASONRY ANCHORS AT NEW COLUMN AND MODIFIED MASONRY WALL. INSTALL MASONRY ANCHORS FASHIONED FROM 5/16" STEEL PLATE, 3" WIDE AND BENT TO 6"x12" AT 10'-0" O.C. VERT. INSTALL # 318, 3/16" DIA. STEEL WEB TIES AT EACH ANCHOR STRAP. ANCHORS AND STRAPS SHALL HAVE A HOT-DIPPED GALVANIZED FINISH.
13. ROOF PANEL MANUFACTURER SHALL PROVIDE ROOF COMPONENTS, INCLUDING ROOF SPLICE JOINT COMPONENTS (AT NEW AND EXISTING ROOF PANEL SPLICE), REQUIRED TO MAKE ROOF SYSTEM WEATHERTIGHT. PROVIDE WARRANTY AS SPECIFIED IN THE SPECIFICATIONS.

REDUCED SIZE DRAWING

DO NOT SCALE

CADD DRAWING

CHANGES TO THIS DRAWING SHALL BE MADE ON CADD ONLY.

477159 08-18-03 DWA — LATEST CADD UPDATE: 05-02-07 09:00 AM BY: R.T. SAMANIEGO

REV.	BY	DATE	REVISION	C.N. NO.	APPROVED
1	RTS	02-07-06	AS-BUILT PER RED-LINED DRAWINGS	477159	JC 02-06-07

CONCURRENCE: AD21 PLANNING OFFICE — DATE:

CONCURRENCE: AD22 PROJECT MANAGER — DATE: 02-24-04
JOE P. EDMONDSON, AD10 ENVIRONMENTAL ENGINEERING DEPT

CONCURRENCE: USING OFFICE — DATE: 02-20-04
JAMES K. SHARP, AD24 OPERATIONS & MAINTENANCE GROUP

CONCURRENCE: DATE: 02-20-04
SCOTT PINKSTON, AD60 ENVIRONMENTAL HEALTH

CONCURRENCE: DATE: 02-24-04
DENNIS S. DAVIS, QD50 SAFETY OFFICE

CONCURRENCE: DATE: 02-20-04
CHARLES B. WINKLER, AD32 COMMUNICATIONS OFFICE
TELECOMMUNICATIONS EQUIPMENT AFFECTED BY THIS CONTRACT WORK IS NOT TO BE ALTERED OR REMOVED BY THE CONTRACTOR. CONTACT THE COTR IN THE EVENT OF A CONFLICT

REF. NO. A-1 OF 5

NASA — Marshall Space Flight Center, Huntsville, Alabama 35812

WORK REQUEST NO. 477159

BUILDING 4619

TENSILE TEST LAB BUILDING ADDITION

FLOOR PLAN, NOTES, DETAILS

AE FIRM: AJT & ASSOCIATES, INC. HUNTSVILLE - ALABAMA			NASA AE CONTRACT NO. NAS8-00144
SUBMITTED: DAVID A. SELLERS	APPROVAL RECOMMENDED: DAVID L. MARTIN		APPROVED: R. B. FELDER
AE: DATE: 01-21-04	AD22 PROJ. A/E: DATE: 02-23-04		AD22 GROUP LEAD: DATE: 02-26-04
DESIGNED: D. ANDERSON	APPROVAL RECOMMENDED: ROBERT S. TALIANKO AJT & ASSOCIATES, INC.		DRAWING NO. FAC-FF-4619-A1
DRAWN: D. ANDERSON			
CHECKED: BOZEMAN	AD22 TEAM LEAD: DATE: 02-26-04		
SCALE: AS NOTED	SPEC. NO. TSRC-5		SHEET 3 OF 27

MSFC-FORM 232 REV. 8-21-89-RCL

MSFC MASTER BID DISK 11-18-2013

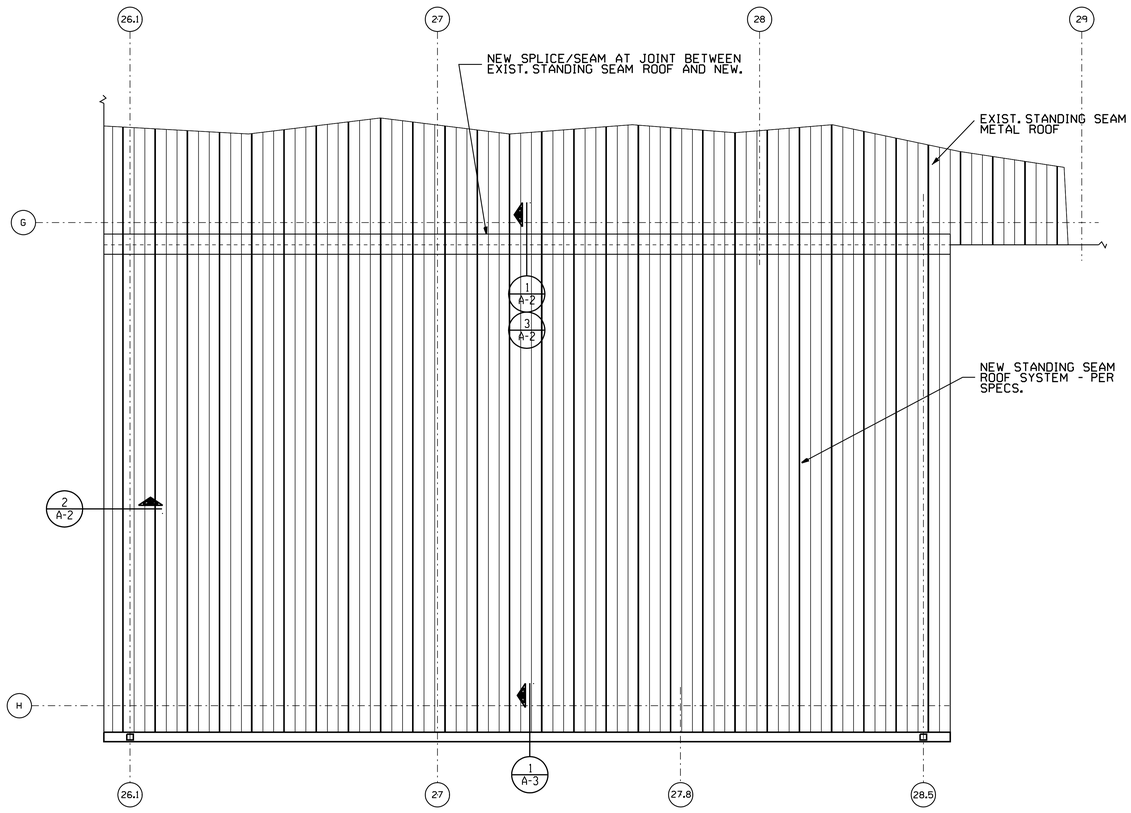

STANDING SEAM ROOF PLAN
SCALE: 1/4" = 1'-0"

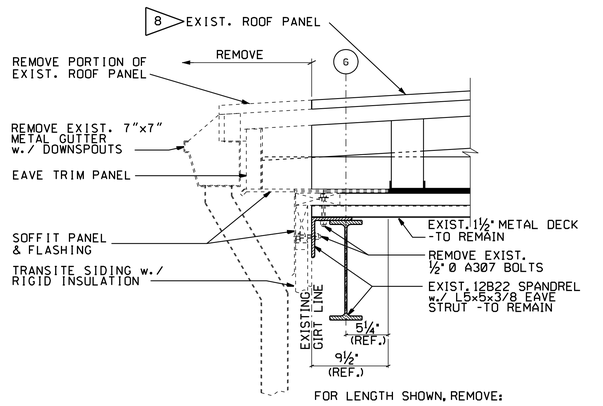

FOR LENGTH SHOWN, REMOVE:

GUTTER & FLASHING, WOOD NAILERS, TRANSITE SIDING & RIGID INSULATION. LEAVE BARE DECK, EAVE ANGLE, AND GIRTS.

1 A-2 DEMOLITION @ EXIST. EAVE SECTION
SCALE: 1½" = 1'-0"

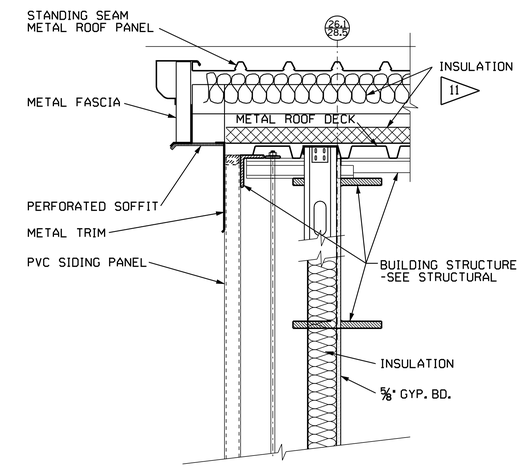

2 A-2 RAKE SECTION
SCALE: 1½" = 1'-0"

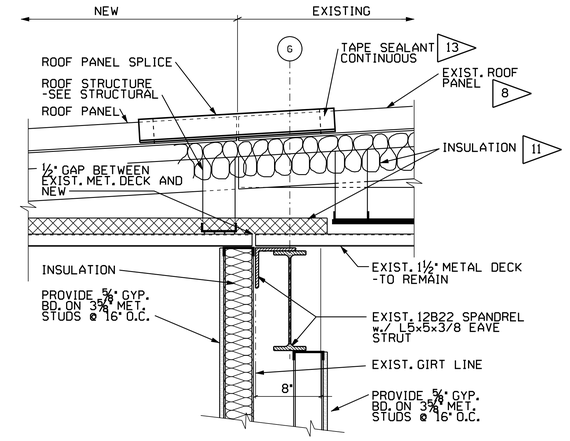

3 A-2 SECTION-NEW/OLD ROOF TIE-IN
SCALE: 1½" = 1'-0"

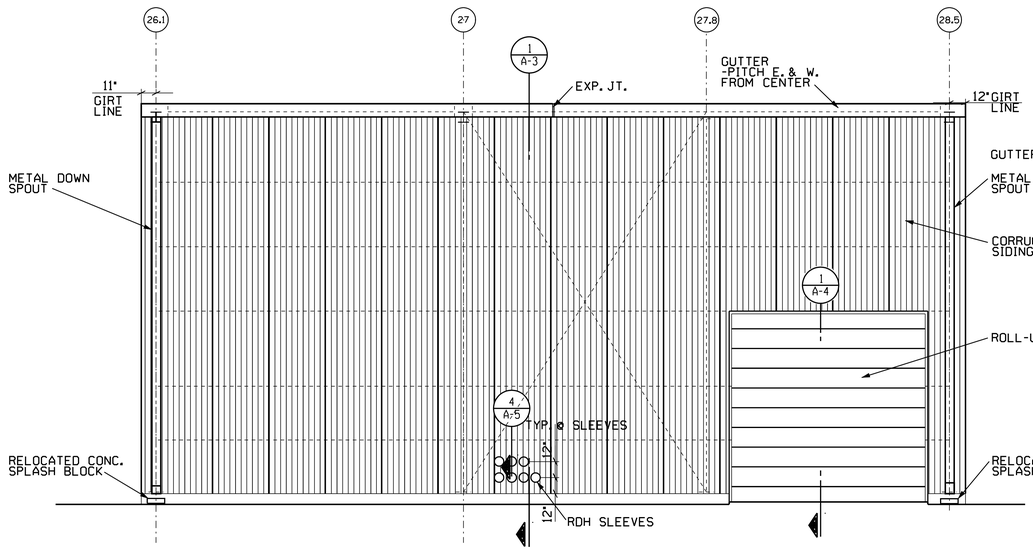

SOUTH ELEVATION
SCALE: 1/4" = 1'-0"

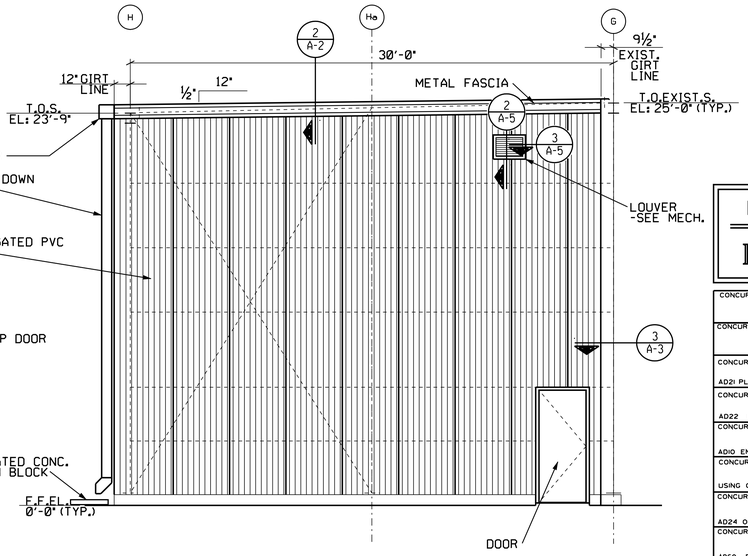

EAST ELEVATION
SCALE: 1/4" = 1'-0"

WEST ELEVATION
OPP. HND. EXCEPT NO DOOR

REDUCED SIZE DRAWING
DO NOT SCALE

CADD DRAWING
CHANGES TO THIS DRAWING SHALL BE MADE ON CADD ONLY.
477159 08-18-03 DWA
LATEST CADD UPDATE: 05-02-07 09:44 AM
BY: B. THOMPSON

CONCURRENCE: DATE:	
CONCURRENCE: DATE:	
CONCURRENCE: DATE: AD21 PLANNING OFFICE	
CONCURRENCE: DATE: AD22 PROJECT MANAGER	
CONCURRENCE: DATE: 02-24-04 JOE P. EDMONDSON AD10 ENVIRONMENTAL ENGINEERING DEPT	
CONCURRENCE: DATE: USING OFFICE	
CONCURRENCE: DATE: 02-20-04 JAMES K. SHARP AD24 OPERATIONS & MAINTENANCE GROUP	
CONCURRENCE: DATE: 02-20-04 SCOTT PINKSTON AD60 ENVIRONMENTAL HEALTH	
CONCURRENCE: DATE: 02-24-04 DENNIS S. DAVIS OD50 SAFETY OFFICE	
CONCURRENCE: DATE: 02-20-04 CHARLES B. WINKLER AD32 COMMUNICATIONS OFFICE TELECOMMUNICATIONS EQUIPMENT AFFECTED BY THIS CONTRACT WORK IS NOT TO BE ALTERED OR REMOVED BY THE CONTRACTOR. CONTACT THE COTR IN THE EVENT OF A CONFLICT	
REF. NO. A-2 OF 5	

REV.	BY	DATE	REVISION	C.I. NO.	APPROVED
1	RTS		AS-BUILT		

Marshall Space Flight Center
Huntsville, Alabama 35812

WORK REQUEST NO. 477159

BUILDING 4619
TENSILE TEST LAB BUILDING ADDITION
ELEVATIONS, ROOF PLAN, DETAILS

AE FIRM: AJT & ASSOCIATES, INC. HUNTSVILLE - ALABAMA		NASA AE CONTRACT NO. NAS8-00144
SUBMITTED: DAVID A. SELLERS	APPROVAL RECOMMENDED: DAVID L. MARTIN	APPROVED: R. B. FELDER
AE: DATE: 01-21-04	AD22 PROJ. A/E DATE: 02-23-04	AD22 GROUP LEAD DATE: 02-26-04
DESIGNED: D. ANDERSON	APPROVAL RECOMMENDED: ROBERT S. TALIANKO AJT & ASSOCIATES, INC.	DRAWING NO.
DRAWN: ANDERSON/BARTON		FAC-FF-4619-A2
CHECKED: BOZEMAN	AD22 TEAM LEAD DATE: 02-26-04	SHEET 4 OF 27
SCALE: AS NOTED	SPEC. NO. TSRC-5	

MSFC-FORM 232 REV. 6-21-89-RCL

MSFC MASTER BID DISK 11-18-2013

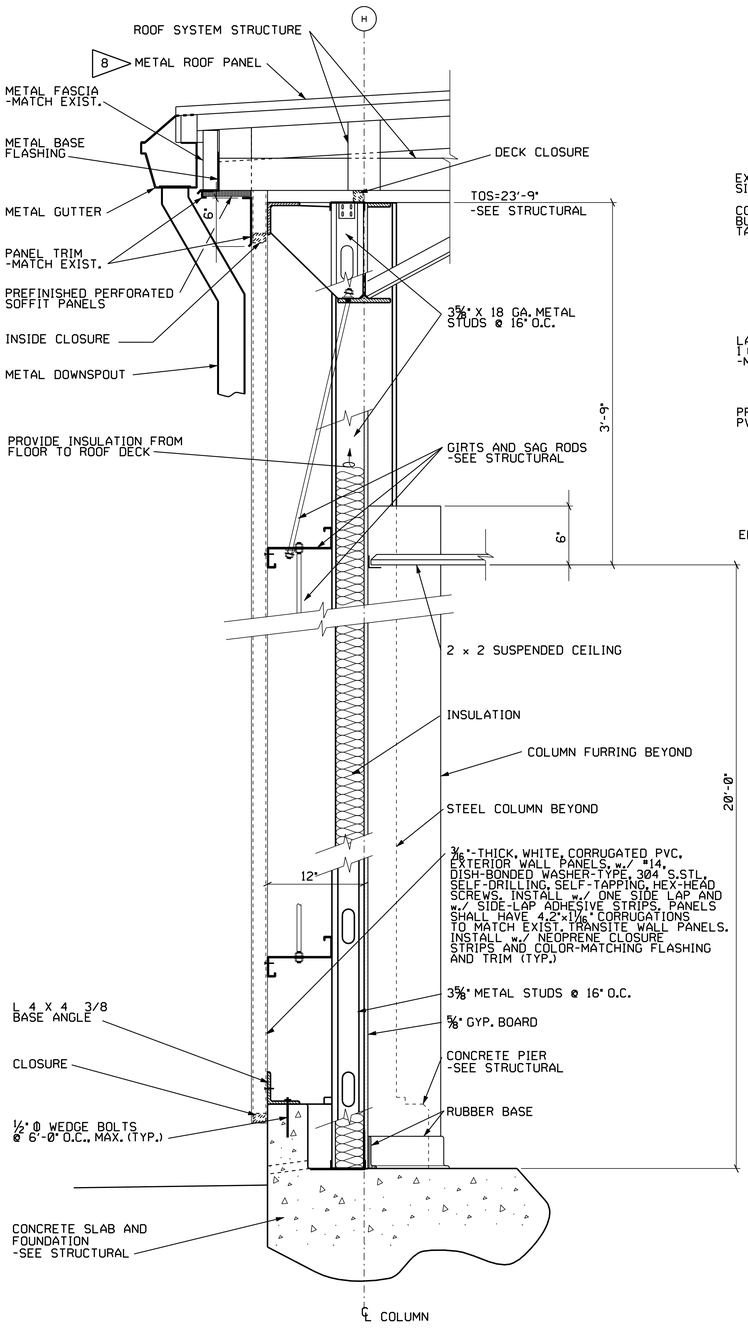

1 A-3 WALL SECTION
SCALE: 1½" = 1'-0" 0 6" 1'

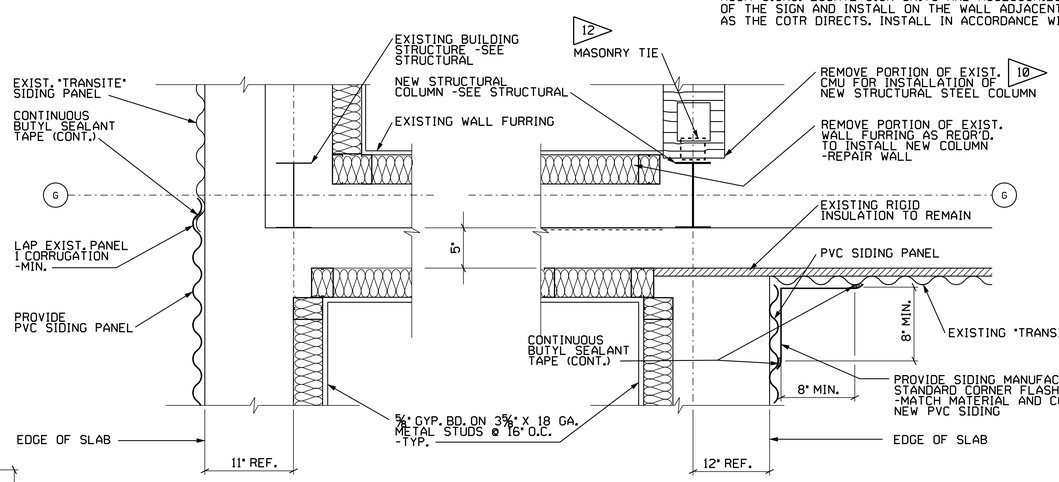

2 A-3 EXIST./NEW WALL DETAIL
SCALE: 1½" = 1'-0" 0 6" 1'

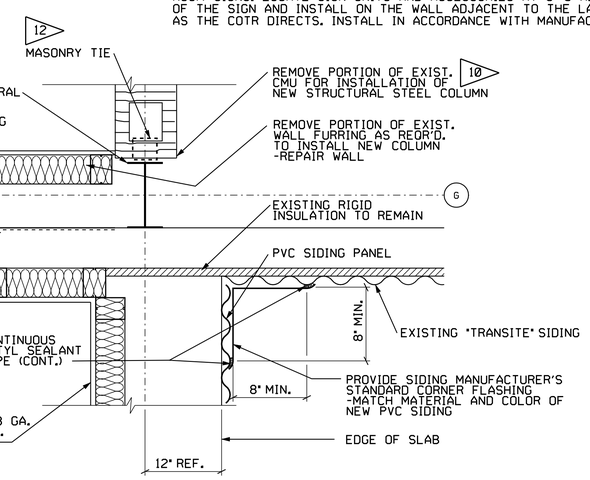

3 A-3 EXIST./NEW WALL DETAIL
SCALE: 1½" = 1'-0" 0 6" 1'

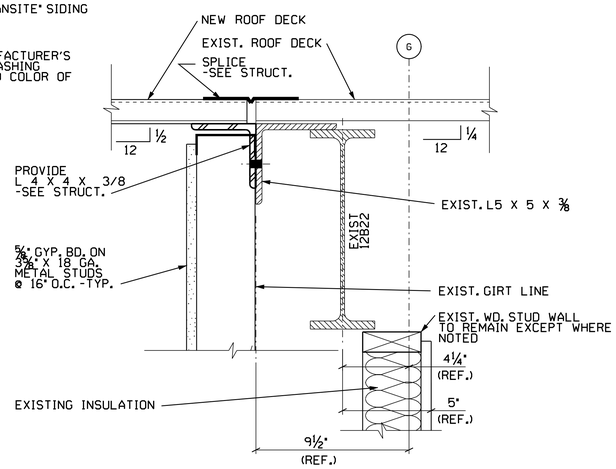

4 A-3 EXIST./NEW WALL DETAIL
SCALE: 3" = 1'-0" 0 2" 4" 6" 8"

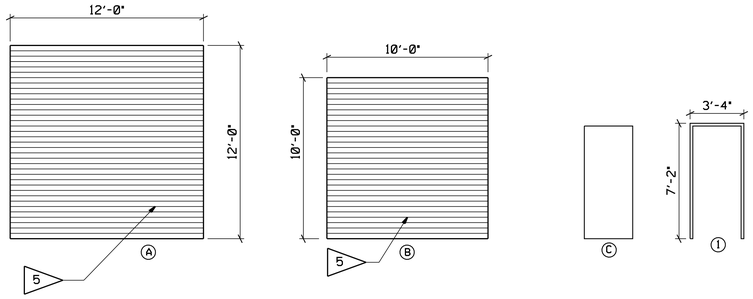

DOOR AND FRAME ELEVATIONS
SCALE: 1/4"= 1'-0"

SIGN SCHEDULE

SYMB.	QTY.	TYPE	MANUFACTURER	FORMAT /SERIES	MODEL NO.	RM. NUMBER	MESSAGE	GRAPHIC	NOTES
1	1	A	"INNERFACE"	F/1	INNERDOT MODULE 4.0	153A	LABORATORY	-	
2	1	A	"INNERFACE"	F/1	INNERDOT MODULE 4.0	153	LABORATORY	-	

NOTE
ROOM SIGNS: LOCATE SIGN UNITS AND ACCESSORIES AT 5'-0" A.F.F. TO THE CENTERLINE OF THE SIGN AND INSTALL ON THE WALL ADJACENT TO THE LATCH SIDE OF THE DOOR, OR AS THE COTR DIRECTS. INSTALL IN ACCORDANCE WITH MANUFACTURER'S INSTRUCTIONS.

HARDWARE

SET NO.1

1 EA.	LOCKSET "SARGENT" 8237 X LNL X 626
1-1/2 PR.	BUTTS "McKINNEY" TB2714 X 626
3 EA.	SILENCERS "TRIMCO" 1229A
1 EA.	THRESHOLD "ZERO" #566
1 EA.	CLOSER 1431 25-0 X 626
1 EA.	STOP

SET NO.2

1 EA.	LATCHSET "SARGENT" 8115 X LNL X 626
1-1/2 PR.	BUTTS "McKINNEY" T2714 X 626
3 EA.	SILENCERS "TRIMCO" 1229A
1 EA.	THRESHOLD "ZERO" #566
1 EA.	CLOSER 1430 25-0 X 626
1 EA.	STOP

DOOR SCHEDULE

DOOR MARK	OPENING SIZE	THICKNESS	TYPE	CONSTRUCTION	FACING/FINISH	GLASS	RATING (HRS)	FRAME	HARDWARE	HEAD	JAMB	SILL
1	3'-0" X 7'-0"	1 3/4"	C	IM	MP	LS		1	2	2/A4	3/A4	4/A4
2	3'-0" X 7'-0"	1 3/4"	C	IM	MP	-	NR	1	1	5/A4	6/A4	7/A4
3	12'-0" X 12'-0"	-	A	-	MP	-	NR	-	•	1/A4		
4	10'-0" X 10'-0"	-	B	-	MP	-	NR	-	•	1/A5		

5

• STANDARD HARDWARE BY MANUFACTURER UNLESS OTHERWISE SPECIFIED.

DOOR CONSTRUCTION
IM - INSULATED METAL

FACING AND FINISH
MP- METAL, PAINT

GLASS
LS -¼" LAMINATED SAFETY GLASS

REDUCED SIZE DRAWING
DO NOT SCALE

CADD DRAWING
CHANGES TO THIS DRAWING SHALL BE MADE ON CADD ONLY.
477159 12-04-03 ROB
LATEST CADD UPDATE: 05-03-07 03:00 PM
BY: B. THOMPSON

REV.	BY	DATE	REVISION	C.I. NO.	APPROVED
1	RTS	02-02-06	AS-BUILT PER RED-LINED DRAWING	477159	

CONCURRENCE: DATE:
AD21 PLANNING OFFICE
AD22 PROJECT MANAGER
JOE P. EDMONDSON DATE: 02-24-04
AD10 ENVIRONMENTAL ENGINEERING DEPT
USING OFFICE
JAMES K. SHARP DATE: 02-20-04
AD24 OPERATIONS & MAINTENANCE GROUP
SCOTT PINKSTON DATE: 02-20-04
AD60 ENVIRONMENTAL HEALTH
DENNIS S. DAVIS DATE: 02-24-04
OD50 SAFETY OFFICE
CHARLES B. WINKLER DATE: 02-20-04
AD32 COMMUNICATIONS OFFICE
TELECOMMUNICATIONS EQUIPMENT AFFECTED BY THIS CONTRACT WORK IS NOT TO BE ALTERED OR REMOVED BY THE CONTRACTOR. CONTACT THE COTR IN THE EVENT OF A CONFLICT

REF. NO. A-3 OF 5

Marshall Space Flight Center
Huntsville, Alabama 35812

WORK REQUEST NO. 477159

BUILDING 4619
TENSILE TEST LAB BUILDING ADDITION
SECTIONS, DETAILS, DOOR SCHEDULE

AE FIRM: AJT & ASSOCIATES, INC. HUNTSVILLE - ALABAMA
NASA AE CONTRACT NO. NAS8-00144

SUBMITTED: DAVID A. SELLERS	APPROVAL RECOMMENDED: DAVID L. MARTIN	APPROVED: R. B. FELDER	
AE:	DATE: 01-21-04	AD22 PROJ. A/E	DATE: 02-23-04	AD22 GROUP LEAD	DATE: 02-26-04
DESIGNED: D. ANDERSON	APPROVAL RECOMMENDED: ROBERT S. TALIANKO AJT & ASSOCIATES, INC.	DRAWING NO. FAC-FF-4619-A3	
DRAWN: ANDERSON/BARTON			
CHECKED: BOZEMAN	AD22 TEAM LEAD	DATE: 02-26-04	
SCALE: AS NOTED	SPEC. NO. TSRC-5	SHEET 5 OF 27	

MSFC-FORM 232 REV. 6-21-89-RCL

MSFC MASTER BID DISK 11-18-2013

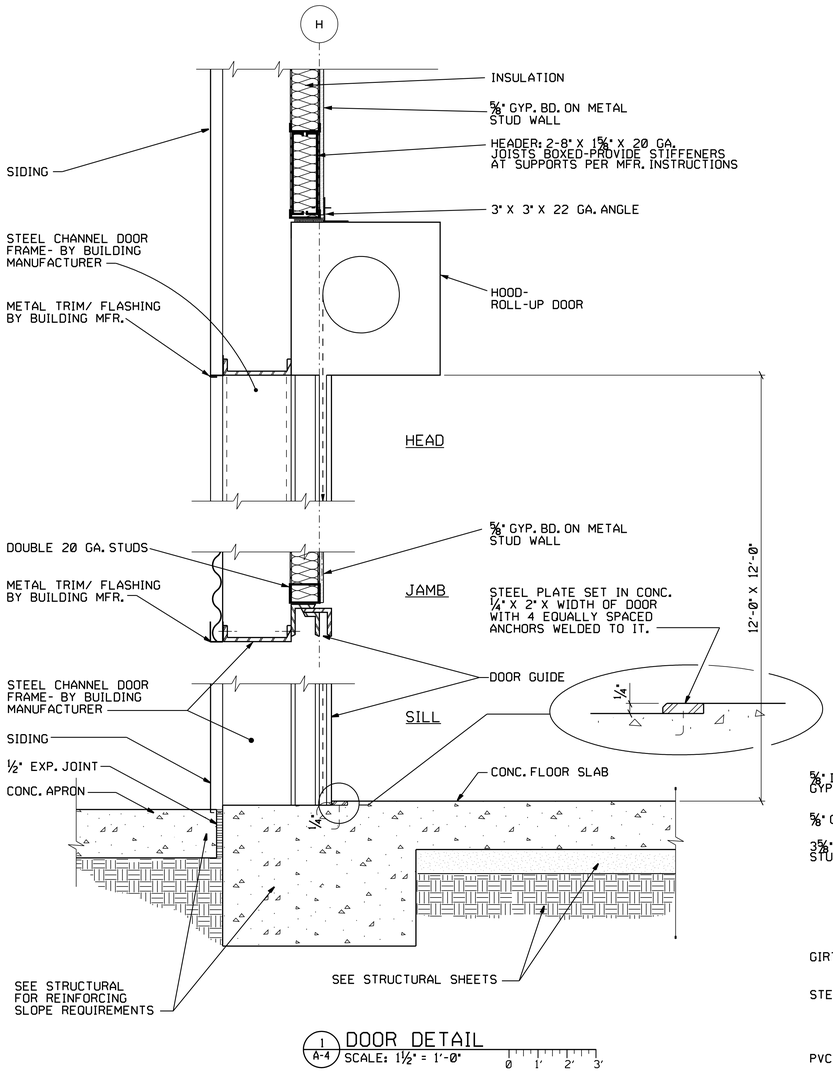

1 A-4 DOOR DETAIL
SCALE: 1½" = 1'-0"

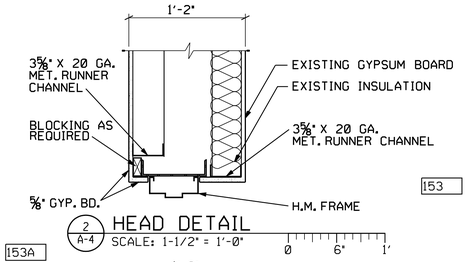

2 A-4 HEAD DETAIL
SCALE: 1-1/2" = 1'-0"

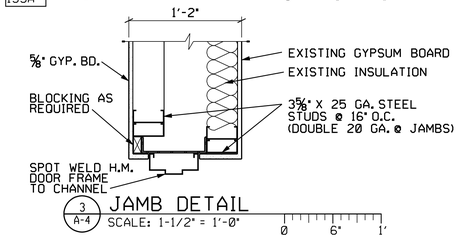

3 A-4 JAMB DETAIL
SCALE: 1-1/2" = 1'-0"

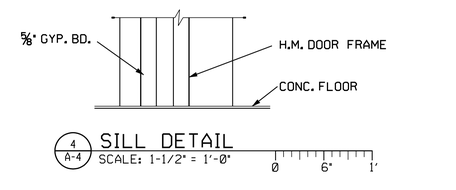

4 A-4 SILL DETAIL
SCALE: 1-1/2" = 1'-0"

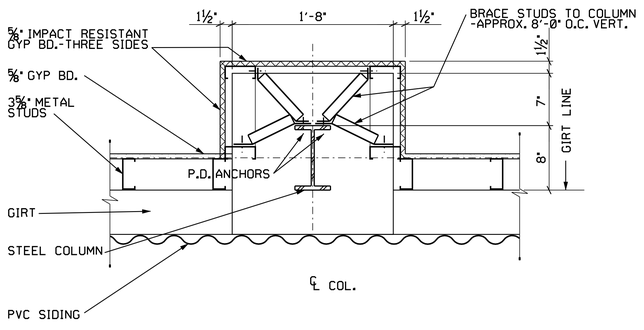

8 A-4 COLUMN FURRING DETAIL
SCALE: 1-1/2" = 1'-0"

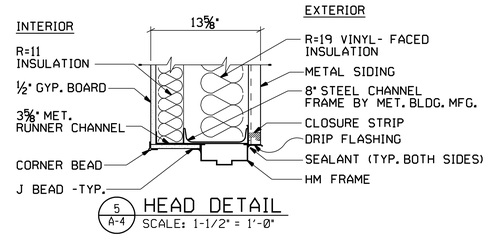

5 A-4 HEAD DETAIL
SCALE: 1-1/2" = 1'-0"

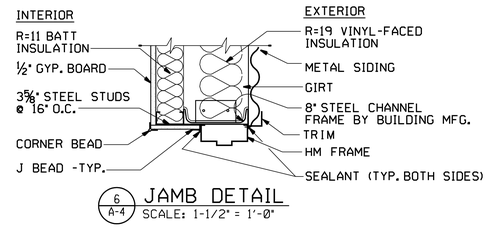

6 A-4 JAMB DETAIL
SCALE: 1-1/2" = 1'-0"

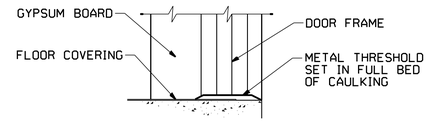

7 A-4 SILL DETAIL
SCALE: 1-1/2" = 1'-0"

REDUCED SIZE DRAWING
DO NOT SCALE

CADD DRAWING
CHANGES TO THIS DRAWING SHALL BE MADE ON CADD ONLY.
477159 / 12-10-03 / ROB
LATEST CADD UPDATE: 03-28-06 09:20 AM
BY: R.T. SAMANIEGO

REV.	BY	DATE	REVISION	C.N. NO.	APPROVED
1	RTS	03-28-06	AS-BUILT	477159	JC 03-29-06

CONCURRENCE: DATE:
AD21 PLANNING OFFICE

CONCURRENCE: DATE:
AD22 PROJECT MANAGER

CONCURRENCE: DATE: 02-24-04
JOE P. EDMONDSON
AD10 ENVIRONMENTAL ENGINEERING DEPT

CONCURRENCE: DATE:
USING OFFICE

CONCURRENCE: DATE: 02-20-04
JAMES K. SHARP
AD24 OPERATIONS & MAINTENANCE GROUP

CONCURRENCE: DATE: 02-20-04
SCOTT PINKSTON
AD60 ENVIRONMENTAL HEALTH

CONCURRENCE: DATE: 02-24-04
DENNIS S. DAVIS
GD50 SAFETY OFFICE

CONCURRENCE: DATE: 02-20-04
CHARLES B. WINKLER
AD32 COMMUNICATIONS OFFICE
TELECOMMUNICATIONS EQUIPMENT AFFECTED BY THIS CONTRACT WORK IS NOT TO BE ALTERED OR REMOVED BY THE CONTRACTOR. CONTACT THE COTR IN THE EVENT OF A CONFLICT

REF. NO. A-4 OF 5

Marshall Space Flight Center
Huntsville, Alabama 35812

WORK REQUEST NO. 477159

BUILDING 4619
TENSILE TEST LAB BUILDING ADDITION
DOOR DETAILS

AE FIRM: AJT & ASSOCIATES, INC. HUNTSVILLE - ALABAMA		NASA AE CONTRACT NO. NAS8-00144
SUBMITTED: DAVID A. SELLERS	APPROVAL RECOMMENDED: DAVID L. MARTIN	APPROVED: R. B. FELDER
AE: DATE: 01-21-04	AD22 PROJ. A/E: DATE: 02-23-04	AD22 GROUP LEAD: DATE: 02-26-04
DESIGNED: BARTON DRAWN: BARTON CHECKED: BOZEMAN	APPROVAL RECOMMENDED: ROBERT S. TALIANKO AJT & ASSOCIATES, INC.	DRAWING NO. FAC-FF-4619-A4
SCALE: AS NOTED	AD22 TEAM LEAD: DATE: 02-26-04	SHEET 6 OF 27
	SPEC. NO. TSRC-5	

MSFC-FORM 232 REV. 8-21-89-PCL

MSFC MASTER BID DISK 11-18-2013

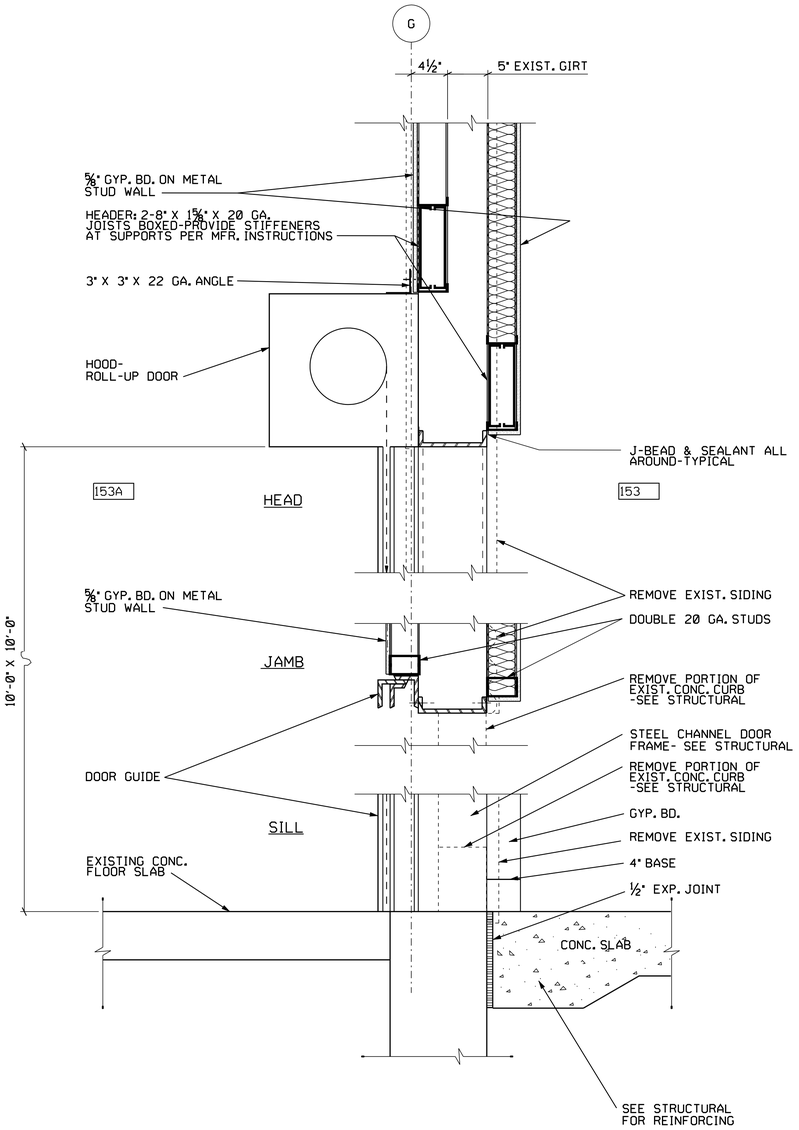

1 A-5 DOOR DETAIL
SCALE: 1½" = 1'-0" 0 1' 2' 3'

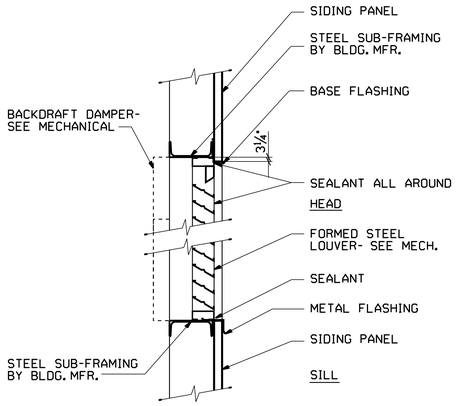

2 A-5 DETAIL- LOUVER HEAD AND SILL
SCALE: 1" = 1'-0" 0 1' 2'

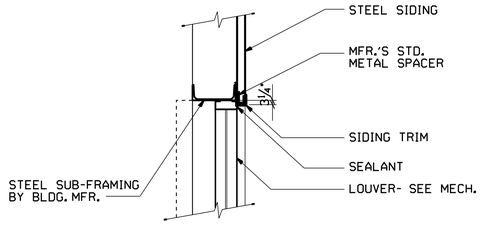

3 A-5 DETAIL- LOUVER JAMB
SCALE: 1" = 1'-0" 0 1' 2'

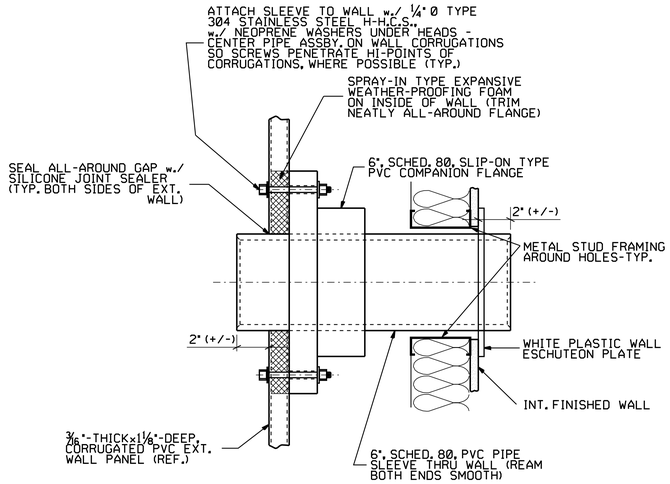

4 A-5 DETAIL- RDH WALL SLEEVES
SCALE: 3" = 1'-0" 0 2" 4" 6" 8"

NOTES:
WALL SLEEVE ASSBYS. MUST BE INSTALLED PRIOR TO INT. FINISHED WALL.

WIRING, AND SEALING OF WIRING, TO BE DONE BY OTHERS.

⚠1 RDH IS AN ABBREVIATION FOR REMOTE DATA HARVESTING

REDUCED SIZE DRAWING
DO NOT SCALE

CADD DRAWING
CHANGES TO THIS DRAWING SHALL BE MADE ON CADD ONLY.
477159 12-31-03 ROB
LATEST CADD UPDATE: 033-28-06 08:30 AM
BY: R.T. SAMANIEGO

REV.	BY	DATE	REVISION	C.I. NO.	APPROVED
⚠1	RTS	03-28-06	AS-BUILT PER RED-LINED DRAWINGS	477159	JC 03-28-06

CONCURRENCE: AD21 PLANNING OFFICE — DATE:
CONCURRENCE: AD22 PROJECT MANAGER — DATE:
CONCURRENCE: JOE P. EDMONDSON, AD10 ENVIRONMENTAL ENGINEERING DEPT — DATE: 02-24-04
CONCURRENCE: USING OFFICE — DATE:
CONCURRENCE: JAMES K. SHARP, AD24 OPERATIONS & MAINTENANCE GROUP — DATE: 02-20-04
CONCURRENCE: SCOTT PINKSTON, AD60 ENVIRONMENTAL HEALTH — DATE: 02-20-04
CONCURRENCE: DENNIS S. DAVIS, OD50 SAFETY OFFICE — DATE: 02-24-04
CONCURRENCE: CHARLES B. WINKLER, AD32 COMMUNICATIONS OFFICE — DATE: 02-20-04
TELECOMMUNICATIONS EQUIPMENT AFFECTED BY THIS CONTRACT WORK IS NOT TO BE ALTERED OR REMOVED BY THE CONTRACTOR. CONTACT THE COTR IN THE EVENT OF A CONFLICT
REF. NO. A-5 OF 5

Marshall Space Flight Center
Huntsville, Alabama 35812

WORK REQUEST NO. 477159

BUILDING 4619
TENSILE TEST LAB BUILDING ADDITION
DOOR SECTION, MISC. DETAILS

AE FIRM: AJT & ASSOCIATES, INC. HUNTSVILLE - ALABAMA
NASA AE CONTRACT NO. NAS8-00144
SUBMITTED: DAVID A. SELLERS
APPROVAL RECOMMENDED: DAVID L. MARTIN
APPROVED: R. B. FELDER
AE: DATE: 01-21-04
AD22 PROJ. A/E: DATE: 02-23-04
AD22 GROUP LEAD: DATE: 02-26-04
DESIGNED: BARTON
DRAWN: BARTON
CHECKED: BOZEMAN
APPROVAL RECOMMENDED: ROBERT S. TALIANKO, AJT & ASSOCIATES, INC.
AD22 TEAM LEAD: DATE: 02-26-04
SCALE: AS NOTED
SPEC. NO. TSRC-5
DRAWING NO. FAC-FF-4619-A5
SHEET 7 OF 27

MSFC-FORM 232 REV. 8-21-89-RCL

MSFC MASTER BID DISK 11-18-2013

PROJECT GENERAL NOTES

(DIVISION 1000 - GENERAL REQUIREMENTS)

1-1. NASA/MSFC "TECHNICAL SPECIFICATIONS FOR REPAIRS AND CONSTRUCTION", VERSION 5 (TSRC-5), SHALL GOVERN THE EXECUTION OF THIS PROJECT, EXCEPT WHERE AMENDED BY THE CONSTRUCTION DOCUMENTS. WHERE A CONFLICT EXISTS BETWEEN ANY OF THE CONSTRUCTION DOCUMENTS (INCLUDING THESE NOTES AND THE CONSTRUCTION DRAWINGS) AND THE TSRC-5 SPECIFICATIONS, THE OTHER CONSTRUCTION DOCUMENTS SHALL GOVERN, WITH THE DRAWINGS BEING PRIMARY. SHOP DRAWINGS, VENDOR DRAWINGS, AND MATERIAL PREPARED BY THE CONTRACTOR ARE NOT CONSIDERED A PART OF THE CONSTRUCTION DOCUMENTS.

1-2. THE GOVERNING BUILDING CODE FOR THIS PROJECT SHALL BE THE IBC-2000 (INTERNATIONAL BUILDING CODE, 2000).

1-3. PRIOR TO BEGINNING ANY WORK, THE CONTRACTOR SHALL VISIT THE WORK SITE TO FAMILIARIZE HIMSELF WITH THE FIELD CONDITIONS PRESENT IN AND AROUND THE WORK AREA, AND TO VERIFY FIELD AND REFERENCE DIMENSIONS. WHEN DISCREPANCIES EXIST BETWEEN THE CONTRACT DOCUMENTS AND THE OBSERVED SITE CONDITIONS, HE SHALL IMMEDIATELY CONTACT THE CONTRACTING OFFICER'S TECHNICAL REPRESENTATIVE (COTR) AND CONFIRM THE PROPER COURSE OF ACTION, BEFORE PROCEEDING FURTHER.

1-4. PRIOR TO BEGINNING EXCAVATION OR CONSTRUCTION, CONTACT NASA AD22 (OSCAR FORD, 544-6759, OR 603-7884) TO OBTAIN A DIG PERMIT. FIELD LOCATE EXISTING UTILITIES PRIOR TO CONSTRUCTION, AND IDENTIFY ANY CONFLICTS BETWEEN THE NEW CONSTRUCTION AND THE EXISTING UTILITIES. TAKE CARE TO PREVENT DAMAGE TO EXISTING UTILITIES DURING CONSTRUCTION.

1-5. ALL DEMOLITION, FABRICATION, ERECTION, AND CONSTRUCTION WORK SHALL BE COORDINATED WITH THE BUILDING MANAGER TO MINIMIZE ANY DISRUPTIONS TO THE USE OR OCCUPANCY OF THE BUILDING, ITS IMMEDIATE GROUNDS, OR ITS ACCESS/EGRESS ROUTES. ACCESS & EGRESS CONTROL SHALL BE COORDINATED WITH NASA SECURITY.

1-6. PARTICULAR CARE SHALL BE TAKEN TO ENSURE THAT NO DAMAGE OCCURS TO ANY OF THE EXISTING BUILDINGS OR STRUCTURES, TO THE SITE SURROUNDINGS, OR TO ANY ITEMS TO BE REUSED. UNLESS OTHERWISE DIRECTED, ITEMS TO BE REUSED AND REINSTALLED SHALL NOT BE STORED EXPOSED TO WEATHER OR DIRECT SUNLIGHT. THE CONTRACTOR SHALL BE RESPONSIBLE AT HIS OWN EXPENSE FOR THE REPAIR OF ANY AND ALL DAMAGE HE MAY CAUSE TO THE BUILDINGS OR SURROUNDINGS.

1-7. THE CONTRACTOR SHALL PERFORM ALL WORK IN A SAFE AND INJURY-FREE MANNER. CONTRACTOR SHALL PAY PARTICULAR ATTENTION TO OSHA 29 CFR 1910 AND 1926, ESPECIALLY TO SECTION 1926.750 PROVISIONS, REGARDING SAFETY REQUIREMENTS FOR ERECTION WORK PERFORMED AT DANGEROUS HEIGHTS. PER TSRC-5, BEFORE BEGINNING ANY WORK, THE CONTRACTOR SHALL SUBMIT A SAFETY PLAN FOR PRIOR APPROVAL WITH THE APPROPRIATE MSFC CONTRACTING OFFICER. SCAFFOLD EQUIPMENT SETUPS SHALL BE AS DIRECTED BY THE MANUFACTURER, AND SHALL IN ALL CASES CONFORM TO OSHA 29 CFR 1926, AND TO INDUSTRY BEST PRACTICE FOR THE SAFETY OF PERSONNEL AND EQUIPMENT. PROVIDE TEMPORARY BRACING AND/OR SUPPORT OF FORMWORK AND STRUCTURES AS NECESSARY FOR SAFETY AND FOR LOADING DURING CONSTRUCTION.

1-8. TO ASSIST IN FABRICATION AND CONSTRUCTION, CERTAIN REFERENCE AND PRODUCT DIMENSIONS MAY BE PROVIDED IN THE CONSTRUCTION DOCUMENTS. IF AN EQUAL FOR AN APPROVED MATERIAL OR PRODUCT IS PROPOSED BY THE CONTRACTOR, THEN HE SHALL SUBMIT FOR APPROVAL BY THE COTR ALL CATALOG OR OTHER PRODUCT DATA NECESSARY FOR EVALUATION, AND ALL REVISED DRAWING DETAILS OR SUPPORTING CALCULATIONS REQUIRED. UNLESS NOTED OTHERWISE, ALL SPECIFIED ITEMS ARE GIVEN ON AN "OR APPROVED EQUAL SUBSTITUTION" BASIS.

1-9. DETAILS AND SECTIONS SHOWN ON THE DRAWINGS ARE TYPICAL, AND SHALL APPLY TO SIMILAR SITUATIONS THROUGHOUT THE ENTIRE PROJECT, UNLESS NOTED OTHERWISE.

1-10. MATERIALS, EQUIPMENT, AND ACCESSORIES SHALL BE INSTALLED IN ACCORDANCE WITH THE MANUFACTURER'S WRITTEN INSTRUCTIONS, UNLESS OTHERWISE SHOWN.

1-11. EXISTING CORRUGATED WALL PANELS CONTAIN ASBESTOS FIBERS. THESE PANELS SHALL NOT BE CUT OR DRILLED UNLESS DIRECTED BY THE CONSTRUCTION DOCUMENTS, OR BY THE COTR. TYPICALLY, AFFECTED PANELS ARE TO BE REPLACED WITH PVC PANELS OF MATCHING PROFILE. FOLLOW PROCEDURES PROSCRIBED IN SECTION 01355 OF TSRC-5, "ASBESTOS PROCEDURES."

1-12. UNLESS SPECIFICALLY ADVISED OTHERWISE IN THE CONTRACT DOCUMENTS, THE CONTRACTOR HAS SOLE RESPONSIBILITY FOR MEANS, METHODS, TECHNIQUES, SEQUENCES, SAFETY, AND PROCEDURES OF CONSTRUCTION.

(DIVISION 2000 - SITE WORK)

2-1. THE STRUCTURAL ENGINEER OF RECORD (SER) IS NOT RESPONSIBLE FOR SUBSURFACE CONDITIONS ENCOUNTERED IN THE FIELD WHICH DIFFER FROM THOSE SHOWN IN THE GEOTECHNICAL REPORTS OR THOSE ASSUMED FOR DESIGN.

2-2. SUBBASE FOR SLABS ON GRADE SHALL BE A DENSE-GRADED MATERIAL MEETING THE REQUIREMENTS OF ALDOT #825 CRUSHED AGGREGATE BASE, TYPE "A". COMPACT THE SUBBASE WITH MODERATE EFFORT, WITH A MINIMUM OF TWO PASSES WITH A VIBRATORY OR UPRIGHT TAMPER, TO PROVIDE UNIFORMLY SOLID COMPACTION OVER THE ENTIRE SUBBASE AREA. SUBBASE THICKNESS SHALL BE 6 INCHES, MINIMUM, UNLESS NOTED OTHERWISE.

2-3. IN ALL AREAS OF NEW, OCCUPIABLE CONSTRUCTION, AND/OR IN SPECIFIC AREAS OTHERWISE REQUIRED BY THE DRAWINGS, PROVIDE TERMITE CONTROL AS SPECIFIED IN TSRC-5, SECTION 2282.

(DIVISION 3000 - CONCRETE)

3-1. ALL CAST-IN-PLACE CONCRETE WORK, EXCEPT FOR SLABS ON GRADE, SHALL CONFORM TO APPLICABLE SECTIONS OF ACI 301-99 (SPECIFICATIONS FOR STRUCTURAL CONCRETE), OF ACI 318-02 (BUILDING CODE REQUIREMENTS FOR STRUCTURAL CONCRETE), OF ACI 315-92 (DETAILS AND DETAILING OF CONCRETE REINFORCEMENT), AND TO CRSI MSP-1-97 (MANUAL OF STANDARD PRACTICE). CONCRETE SLAB CONSTRUCTION AND PLACING SHALL CONFORM TO THE APPLICABLE SECTIONS OF ACI 301-99 (SPECIFICATIONS FOR STRUCTURAL CONCRETE), AND TO 302.1R-96 (GUIDE TO CONCRETE FLOOR AND SLAB CONSTRUCTION).

3-2. EXCEPT WHERE NOTED OTHERWISE, BEFORE BEGINNING ANY CONCRETE WORK, THE CONTRACTOR SHALL SUBMIT TO THE COTR FOR PRIOR APPROVAL, A COMPLETE SET OF REINFORCEMENT FABRICATION AND PLACEMENT DRAWINGS FOR NEW STRUCTURES AND/OR STRUCTURAL MODIFICATIONS AND ADDITIONS. REPRODUCIBLE ELECTRONIC DRAWING FILES OF STRUCTURAL DRAWINGS WILL NOT BE PROVIDED TO THE CONTRACTOR, OR ANY OF HIS AGENTS.

3-3. EXCEPT WHERE NOTED OTHERWISE, BEFORE BEGINNING ANY CONCRETE WORK, THE CONTRACTOR SHALL SUBMIT TO THE COTR FOR PRIOR APPROVAL, ALL CONCRETE MIX DESIGN CALCULATIONS, AND SUPPORTING DOCUMENTS AND DATA.

3-4. UNLESS NOTED OTHERWISE, THE MINIMUM PERMITTED CONCRETE 28-DAY ULTIMATE STRENGTH IS 4000 psi.

3-5. NO CONCRETE ADMIXTURES CONTAINING CHLORIDES WILL BE ALLOWED WITHOUT PRIOR APPROVAL BY THE COTR, AND ALL STRUCTURAL CONCRETE SHALL BE FREE OF WASHED RIVER GRAVEL, PEA GRAVEL, FLINT, AND HARDENER ADDITIVES.

3-6. CONCRETE REINFORCING BAR SHALL BE DEFORMED BAR CONFORMING TO ASTM A615-GR. 60.

3-7. WELDED WIRE REINFORCEMENT SHALL CONFORM TO ASTM A185 FOR PLAIN WIRE REINFORCEMENT, AND TO ASTM A497 FOR DEFORMED WIRE REINFORCEMENT. UNLESS SHOWN OTHERWISE, MINIMUM SIDE AND END LAPS SHALL BE TWO MESH SPACINGS WIDE. THE CONTRACTOR MAY ELECT TO SUBMIT FOR SUBSTITUTING STEEL OR FIBER MESH FOR THE WELDED WIRE SLAB REINFORCEMENT SHOWN.

3-8. UNLESS NOTED OTHERWISE, THE MINIMUM CLEAR COVER FOR STEEL REINFORCING IN CONCRETE CAST AGAINST OR EMBEDDED IN EARTH SHALL BE 3".

3-9. AT ALL CONSTRUCTION JOINTS BETWEEN CONCRETE POURS, PRIOR TO THE SUCCEEDING POUR, THE CONSTRUCTION JOINT SHALL BE MECHANICALLY CLEANED BY POWER WIRE BRUSHING, AND THEN POWER RINSED CLEAN. IMMEDIATELY PRIOR TO THE NEXT POUR, AN EPOXY BONDING AGENT SHALL BE APPLIED TO THE INTERFACE AT THE EXISTING CONCRETE SURFACE TO SECURELY BOND THE FRESH CONCRETE TO THE EXISTING. THE BONDING AGENT SHALL BE "CONCRESIVE LPL LIQUID", AS MANUFACTURED BY MASTER BUILDERS TECHNOLOGIES, OF CLEVELAND, OH (800-628-9900). FOLLOW THE MANUFACTURER'S DIRECTIONS FOR MIXING AND APPLICATION.

3-10. EQUIPMENT PAD CONCRETE MIX SHALL BE REINFORCED WITH FIBRILATED POLYPROPYLENE FIBERS, ADDED AT THE RATE OF 1-1/2 lbs/CY OF CONCRETE MIX. THE FIBROUS CONCRETE REINFORCEMENT SHALL BE "FIBERMESH" POLYPROPYLENE FIBERS, AS MANUFACTURED BY SYNTHETIC INDUSTRIES, OF CHATTANOOGA, TN. FOLLOW THE MANUFACTURER'S DIRECTIONS FOR MIXING AND APPLICATION. THE BASE SLAB SHALL CURE FOR A MINIMUM OF 7 DAYS BEFORE POURING EQUIPMENT PADS.

3-11. UNLESS NOTED OTHERWISE, EXPOSED CORNERS AND EDGES OF ALL CONCRETE CONSTRUCTION SHALL HAVE A 3/4" CHAMFER, AND EXPOSED VERTICAL FACES OF CONCRETE SHALL RECEIVE A SMOOTH RUBBED FINISH AS DEFINED IN ACI 301-99.

3-12. PRIOR TO POURING SLABS ON GRADE, ENSURE THAT ALL UTILITIES UNDERNEATH THE SLAB, AS WELL AS ALL SLAB PENETRATIONS, ARE PROPERLY LOCATED AND SECURED AGAINST DISPLACEMENT.

3-13. FOR THE LOCATIONS AND SIZES OF MECHANICAL PENETRATIONS THROUGH CONCRETE SLABS, SEE DRAWING SHEET M-1.

3-14. FOR THE LOCATIONS AND SIZES OF ELECTRICAL PENETRATIONS THROUGH CONCRETE SLABS, SEE DRAWING SHEET NO. E-1.

3-15. FOR SLABS ON GRADE, AT EACH FLOOR SLAB CONTROL JOINT LINE, ONE-HALF OF THE WELDED WIRE REINFORCEMENT WIRES CROSSING THE JOINT SHALL BE CUT, PRIOR TO POURING THE SLAB.

3-16. CONCRETE SLABS SHALL HAVE A CLASS-2 TROWELED FINISH, AS DEFINED IN CHAPTER TWO OF ACI 301-99. SEE THE FLATNESS / LEVELNESS CHART GIVEN ON DRAWING S-2 FOR TOLERANCES.

3-17. UNLESS SHOWN OTHERWISE, EXTERIOR CONCRETE ENTRY AND EQUIPMENT PADS SHALL BE SLOPED TO DRAIN AWAY FROM ADJACENT STRUCTURES. THEY SHALL ALSO HAVE A LIGHTLY-BROOMED FINISH, WITH THE BROOM STROKES ACROSS THE SLOPE, AND PARALLEL TO ADJACENT WALLS.

3-18. CONCRETE SLAB CONTROL JOINTS SHALL BE MADE AS SHOWN IN THE DRAWINGS. THE JOINTS SHALL BE CUT WHEN THE CONCRETE SURFACE IS FIRM ENOUGH NOT TO RAVEL OR OTHERWISE BE DAMAGED BY THE CUTTING EQUIPMENT, BUT IN NO CASE ANY LATER THAN 12 HOURS AFTER PLACING AND FINISHING THE CONCRETE SURFACE. CONCRETE SLAB CONTROL JOINTS SHALL BE FILLED WITH SONNEBORN "SL 1", ONE-PART, SELF-LEVELING, POLYURETHANE SEALANT, AS MANUFACTURED BY CHEMREX, OF SHAKOPEE, MN. APPLY USING SONNEBORN CLOSED-CELL BACKER ROD AS REQUIRED FOR PROPER INSTALLATION. FOLLOW MANUFACTURER'S DIRECTIONS FOR MIXING AND APPLICATION OF ALL PRODUCTS. SLABS SHALL CURE FOR AS LONG AS PRACTICABLE BEFORE FILLING JOINTS, BUT IN NO CASE LESS THAN 28 DAYS. UNLESS OTHERWISE AUTHORIZED BY THE COTR. PROTECT FILLED JOINTS FROM DIRT AND TRAFFIC FOR A MINIMUM PERIOD OF 7 DAYS AFTER APPLYING.

3-19. EXCEPT AS NECESSARY FOR CURING OPERATIONS, NO LOADS SHALL BE ALLOWED ON NEWLY-POURED CONCRETE SLABS FOR A PERIOD OF TEN DAYS, UNLESS OTHERWISE AUTHORIZED BY THE COTR.

3-20. FLOWABLE FILL USED FOR STRUCTURAL INFILL AND LEVELING PURPOSES WITHIN NEW OR EXISTING STRUCTURES SHALL CONFORM TO TSRC-5, SECTION 2315: READY-MIXED FLOWABLE FILL, WITH THE FOLLOWING ADDITIONAL REQUIREMENTS: THE COMPRESSIVE STRENGTH SHALL MEASURE BETWEEN 150-250 PSI, AND THE UNIT WEIGHT SHALL BE NO LESS THAN 125 PCF.

3-21. UNLESS NOTED OTHERWISE, ANCHOR RODS SHALL CONFORM TO ASTM F1554-GR. 36, AND SHALL BE GALVANIZED PER ASTM A153. RODS SHALL BE SIZED FOR A 1/8" CORROSION ALLOWANCE, WITH THE MINIMUM ROD DIAMETER BEING 3/4". ANCHOR RODS SHALL NOT BE REPAIRED, REPLACED, OR FIELD MODIFIED WITHOUT PRIOR WRITTEN APPROVAL OF THE COTR.

3-22. ALL DRILLED MECHANICAL OR EPOXY-SET ANCHOR BOLTS SHALL BE OF TYPE 304 OR TYPE 316 STAINLESS STEEL, OF THE SIZES AND TYPES INDICATED IN THE DRAWINGS. POWDER-ACTUATED FASTENERS IN CONCRETE, OR OTHERWISE EXPOSED TO MOISTURE OR CORROSION, SHALL BE GRADE A4 STAINLESS STEEL (OR BETTER).

(DIVISION 5000 - METALS)

5-1. ALL EXISTING STRUCTURAL STEEL FRAMING IS ASSUMED TO BE COATED WITH LEAD-BEARING PAINTS. WHERE WELDING, BURNING, DRILLING, GRINDING, OR ABRASIVE OPERATIONS WILL CAUSE THE RELEASE OF ANY LEAD-BEARING COATINGS, THE CONTRACTOR SHALL COMPLY WITH THE APPLICABLE PROVISIONS OF SECTION 9970 OF TSRC-5, "SURFACE PREPARATION - EXTERIOR STEEL."

5-2. EXCEPT WHERE NOTED OTHERWISE, BEFORE BEGINNING ANY FABRICATION WORK, THE CONTRACTOR SHALL SUBMIT TO THE COTR FOR PRIOR APPROVAL, A COMPLETE SET OF STEEL FABRICATION AND ERECTION DRAWINGS FOR NEW STRUCTURES AND/OR STRUCTURAL MODIFICATIONS AND ADDITIONS. REPRODUCIBLE ELECTRONIC DRAWING FILES OF STRUCTURAL DRAWINGS WILL NOT BE PROVIDED TO THE CONTRACTOR, OR ANY OF HIS AGENTS.

5-3. THE CONTRACTOR SHALL PROVIDE WRITTEN CERTIFICATION TO THE COTR THAT CONCRETE FOR FOOTINGS, PIERS, WALLS, AND OTHER FOUNDATIONS RECEIVING STRUCTURAL STEEL COLUMNS, HAS PROPERLY AND SUFFICIENTLY CURED, AND ATTAINED AT LEAST 75 PERCENT OF ITS DESIGN ULTIMATE STRENGTH, PRIOR TO THE ERECTION OF THOSE COLUMNS, PER OSHA 29 CFR 1926.752.

5-4. ALL STRUCTURAL STEEL FABRICATION AND ERECTION SHALL CONFORM TO AISC ASD-89 (MANUAL OF STEEL CONSTRUCTION), AND TO AISC S303-00 (CODE OF STANDARD PRACTICE).

5-5. LIGHT-GAUGE STEEL FRAMING DESIGN, MEMBERS, AND ERECTION PROCEDURES SHALL CONFORM TO AISI SG973-96 (COLD-FORMED STEEL DESIGN MANUAL), AND TO CURRENT NASFA GUIDELINES.

5-6. BAR JOIST FABRICATION AND ERECTION SHALL CONFORM TO SJI 41 STANDARD SPECIFICATIONS, INCLUDING SUPPLEMENTARY FRAMING AND ERECTION BRACING.

5-7. ALL SHOP AND FIELD WELDING METHODS AND PROCEDURES FOR STEEL SHALL CONFORM TO AWS D1.1-00 AND D1.3-98, AND TO AWS WZC D19.0-72 FOR ZINC-COATED STEELS. UNLESS NOTED OTHERWISE, THE MINIMUM PERMITTED FILLET WELD SIZE IS 3/16". UNLESS REQUIRED OTHERWISE BY BASE METAL CHEMISTRY CONSTRAINTS, ALL WELDING SHALL BE PERFORMED USING E70XX LOW-HYDROGEN TYPE ELECTRODES.

5-8. UNLESS NOTED OTHERWISE, ALL STEEL WIDE-FLANGE BEAMS SHALL CONFORM TO ASTM A 992, FOR STRUCTURAL SHAPES USED IN BUILDING FRAMING. ALL OTHER STEEL PLATE, BAR, AND SHAPES SHALL CONFORM TO ASTM A 36-00, FOR CARBON STRUCTURAL STEEL. STEEL HOLLOW STRUCTURAL SECTIONS SHALL CONFORM TO ASTM A53, TYPE E OR TYPE S, GRADE B, FOR PIPE, AND TO ASTM A500, GRADE B, FOR TUBE STEEL.

5-9. ALL COLD-FORMED STRUCTURAL MEMBERS SHALL CONFORM TO ASTM A653-94, WITH A ZINC COATING CONFORMING TO ASTM A924, AND, UNLESS OTHERWISE NOTED, SHALL HAVE A YIELD STRENGTH NOT LESS THAN 33 KSI (MINIMUM).

5-10. ALL EXPOSED TUBE STEEL SECTIONS SHALL THEIR HAVE OPEN ENDS CAPPED WITH 3/16" STEEL PLATES, WITH A 1/8" FILLET SEAL-WELD ALL AROUND, AND UNLESS OTHERWISE NOTED, SHALL BE DRILLED AT THEIR BASES OR LOW POINTS TO PROVIDE 1/4"-DIAMETER WEEP AND VENT HOLES.

5-11. UNLESS NOTED OTHERWISE, ALL BOLTED CONNECTIONS FOR PRIMARY STRUCTURAL MEMBERS SHALL USE 3/4" DIAMETER (MINIMUM), ASTM A325, HIGH-STRENGTH BOLTS, WITH MATCHING HEAVY HEX NUTS AND FLAT WASHERS. BOLTS FOR SECONDARY CONNECTIONS SHALL BE 1/2" DIAMETER (MINIMUM), ASTM A325, OR SAE GRADE 5. ALL BOLTED CONNECTIONS THROUGH CHANNEL LEGS OR I-BEAM FLANGES WITH SLOPING FACES SHALL USE BEVELED WASHERS ADJACENT TO THE SLOPING FACE. UNLESS NOTED OTHERWISE, ALL BOLTED STRUCTURAL CONNECTIONS SHALL BE TORQUED "SNUG TIGHT."

5-12. UNLESS OTHERWISE NOTED, BEAM CONNECTIONS SHALL BE DESIGNED AS SIMPLE-SPAN FRAMED CONNECTIONS, WITH THE CONNECTION CAPACITY EQUAL TO ONE-HALF OF THE SIMPLE-SPAN MAXIMUM AISC ALLOWABLE LOAD, GIVEN THE BRACING CONDITIONS PROVIDED.

5-13. ALL BOLTED STRUCTURAL CONNECTIONS DESIGNATED AS "FULLY-TENSIONED" (TYPE FT) SHALL BE TIGHTENED IN CONFORMANCE WITH THE RCSC "SPECIFICATION FOR STRUCTURAL JOINTS", SECTION 8.

5-14. ALL BOLTED STRUCTURAL CONNECTIONS DESIGNATED AS "SLIP-CRITICAL" (TYPE SC) SHALL BE TIGHTENED IN CONFORMANCE WITH THE RCSC "SPECIFICATION FOR STRUCTURAL JOINTS", SECTION 8. ADDITIONALLY, UNLESS SHOWN OTHERWISE, THE FAYING SURFACES OF THESE CONNECTIONS SHALL MEET THE REQUIREMENTS FOR CLASS "A", AS DEFINED BY THE RCSC SPECIFICATION, SECTION 5: CLEAN MILL SCALE. WHERE A COATING IS REQUIRED BY THE CONSTRUCTION DOCUMENTS, BUT OTHERWISE UNSPECIFIED, THE COATING SHALL BE A CLASS "B" COATING MEETING THE REQUIREMENTS OF THE RCSC SPECIFICATION, SECTION 5. GALVANIZED FAYING SURFACES OF SLIP-CRITICAL CONNECTIONS SHALL BE HAND WIRE BRUSHED TO PROVIDE THE REQUIRED SLIP RESISTANCE.

(DIVISION 7000 - THERMAL & MOISTURE PROTECTION)

7-1. INSULATING MATERIALS SHALL BE FLEXIBLE, RESILIENT, NON-COMBUSTIBLE, FIBERGLASS BLANKETS COMPLYING WITH FS HH-I-521-F, TYPE I. THE MINIMUM DENSITY SHALL BE 1.5 LBS/CF. THE MINIMUM R-VALUE FOR WALL INSULATION SHALL BE R-19, AND FOR ROOF INSULATION AN R-VALUE OF R-24, BOTH WITH WHITE VINYL FACINGS.

(DIVISION 9000 - FINISHES)

9-1. ALL NON-GALVANIZED EXTERIOR STEEL SHALL BE PRIME COATED WITH RED OXIDE ALKYD PRIMER, AND FINISH COATED WITH STRUCTURAL GRAY ALKYD ENAMEL, PER TSRC-5, SECTION 9900-3.05.D. ALL NON-GALVANIZED INTERIOR STEEL SHALL BE PRIME COATED WITH RED OXIDE ALKYD PRIMER, AND FINISH COATED WITH ALKYD ENAMEL, PER TSRC-5, SECTION 9900-3.06.E. ALL GALVANIZED STEEL SHALL BE PRIME COATED WITH GRAY ALKYD PRIMER, AND FINISH COATED WITH ALKYD ENAMEL, PER TSRC-5, SECTION 9900-3.05.B. TOUCH UP ALL AREAS OF DAMAGED COATINGS ON BOTH EXISTING AND NEW STEEL CONSTRUCTION. THE DEFAULT FINISH COLOR IS STRUCTURAL GRAY. THE STANDARD FINISH COLOR FOR BARRIERS, GUARDS, HANDRAILS, LADDERS, STAIR NOSINGS, CRANES, ETC., IS SAFETY YELLOW.

9-2. ALL EXPOSED CARBON STEEL SHALL BE CLEANED TO SSPC-SP3 REQUIREMENTS, PAINTED WITH A ZINC-RICH PRIMER, AND FINISH PAINTED WITH AN ALKYD ENAMEL, ALL PER TSRC-5, SECTION 9900-3.05.D. THE FINISH COAT COLOR SHALL BE DETERMINED BY THE OWNER TO COORDINATE WITH THE EXISTING BUILDING FINISH. ANY DAMAGED COATINGS SHALL BE REPAIRED EQUAL TO THE ORIGINAL COATING PRIOR TO THE COMPLETION OF THE PROJECT. PER OSHA 1926.754(c)(3), COATINGS FOR ALL SKELETAL STRUCTURAL STEEL ON WHICH WORKERS WILL WALK SHALL ACHIEVE A MINIMUM AVERAGE SLIP RESISTANCE OF 0.50 WHEN MEASURED WITH A VARIABLE INCIDENCE TRIBOMETER (VIT) ON A WETTED SURFACE, ACCORDING TO ASTM F1679.

9-3. UNLESS OTHERWISE SHOWN, DO NOT PAINT: FAYING SURFACES OF SLIP-CRITICAL CONNECTIONS, STEEL TO BE ENCASED IN CONCRETE, AREAS WITHIN 2" OF FIELD WELD LOCATIONS, FLANGES OF BEAMS TO RECEIVE WELDED SHEAR STUDS, OR STEEL TO RECEIVE FIRE-RESISTANT COATINGS.

(DIVISION 15000 - MECHANICAL)

15-1. SEE MECHANICAL SPECIFICATIONS AND DRAWING SHEETS FOR LOCATION AND INSTALLATION DETAILS OF MECHANICAL EQUIPMENT REFERENCED ON STRUCTURAL DRAWINGS.

(DIVISION 16000 - ELECTRICAL)

16-1. SEE ELECTRICAL SPECIFICATIONS AND DRAWING SHEETS FOR GROUNDING DETAILS OF INSTALLED OR ERECTED STEEL STRUCTURES.

BUILDING DESIGN SUMMARY

LOADS -

DEAD LOADS - ACTUAL LOADS IMPOSED + 5psf ROOF SURCHARGE
LIVE LOADS - 50plf ON ROOF GIRDERS + 12kips @ ANY POINT FOR FUTURE OVERHEAD 5-ton CRANE
ROOF LIVE LOAD - 20psf (NON-REDUCIBLE)
SNOW LOAD - 10psf
WIND LOADS - 90-mph PER ASCE 7-02
SEISMIC DESIGN -
SOIL SITE CLASS "E"
SDS = 0.47
SD1 = 0.29
FRAMING TYPES - OMF AND CBF
SIMPLIFIED ANALYSIS PER ASCE 7-02, SECTION 9.5.4

DESIGN CODES -

AISC - LRFD 2001
AISI - CFD-97
ACI 318-02 & 302.1R-96
ASCE 7-02
IBC 2000
SJI 41
CMAA 74

BUILDING CRITERIA -

APPROXIMATE ENCLOSED AREA - 1500sf
FACTORY-INDUSTRIAL GROUP "F-1"
CONSTRUCTION "TYPE II-B" (NON-COMBUSTIBLE & SPRINKLERED)
OCCUPANCY "CATEGORY I"
WIND & SNOW EXPOSURE "CATEGORY C"

ASBESTOS & LEAD COATINGS NOTE

THE EXISTING BUILDING EXTERIOR WALL PANELS CONTAIN ASBESTOS-FIBERED CEMENT, AND THE EXISTING STEEL FRAMING HAS LEAD-BEARING COATINGS.

REDUCED SIZE DRAWING
DO NOT SCALE

CADD DRAWING
CHANGES TO THIS DRAWING SHALL BE MADE
477159 ON CADD ONLY,
08-18-03 DWA LATEST CADD UPDATE: 12-12-05 12:15 PM
BY: SAMANIEGO

REV.	BY	DATE	REVISION	CA. NO.	APPROVED
1	RTS	12/12/05	AS-BUILT	477159	

CONCURRENCE: AD21 PLANNING OFFICE DATE:
CONCURRENCE: AD22 PROJECT MANAGER DATE:
CONCURRENCE: ADIO ENVIRONMENTAL ENGINEERING DEPT JOE P. EDMONDSON DATE: 02-24-04
CONCURRENCE: USING OFFICE DATE:
CONCURRENCE: AD24 OPERATIONS & MAINTENANCE GROUP JAMES K. SHARP DATE: 02-20-04
CONCURRENCE: AD60 ENVIRONMENTAL HEALTH SCOTT PINKSTON DATE: 02-20-04
CONCURRENCE: GD50 SAFETY OFFICE DENNIS S. DAVIS DATE: 02-24-04
CONCURRENCE: AD32 COMMUNICATIONS OFFICE CHARLES B. WINKLER DATE: 02-20-04
TELECOMMUNICATIONS EQUIPMENT AFFECTED BY THIS CONTRACT WORK IS NOT TO BE ALTERED OR REMOVED BY THE CONTRACTOR. CONTACT THE CO16 IN THE EVENT OF A CONFLICT

Marshall Space Flight Center
Huntsville, Alabama 35812

WORK REQUEST NO. 477159

BUILDING 4619
TENSILE TEST LAB BUILDING ADDITION
GENERAL NOTES

AE FIRM: AJT & ASSOCIATES, INC. HUNTSVILLE - ALABAMA
NASA AE CONTRACT NO. NAS8-00144
SUBMITTED: DAVID A. SELLERS
APPROVAL RECOMMENDED: DAVID L. MARTIN
APPROVED: R. B. FELDER
AE: DATE: 01-21-04
AD22 PROJ. A/E DATE: 02-23-04
AD22 GROUP LEAD DATE: 02-26-04
DESIGNED: D. ANDERSON
DRAWN: D. ANDERSON
CHECKED: D. SELLERS
APPROVAL RECOMMENDED: ROBERT S. TALIANKO AJT & ASSOCIATES, INC.
AD22 TEAM LEAD DATE: 02-26-04
SCALE: AS NOTED
SPEC. NO. TSRC-5
DRAWING NO. FAC-FF-4619-S1
SHEET 8 OF 27

REF. NO. S-1 OF 9

REF. ORIGINAL CONST. DWGS.: F&D-C-4619 (1964)
REF. RETROFIT ROOF DWGS.: FAC-EA-4619 (1997)

MSFC-FORM 232 REV. 8-21-89-MCL

MSFC MASTER BID DISK 11-18-2013

BUILDING 4619
1 VIEW LOOKING NORTH
N.T.S.

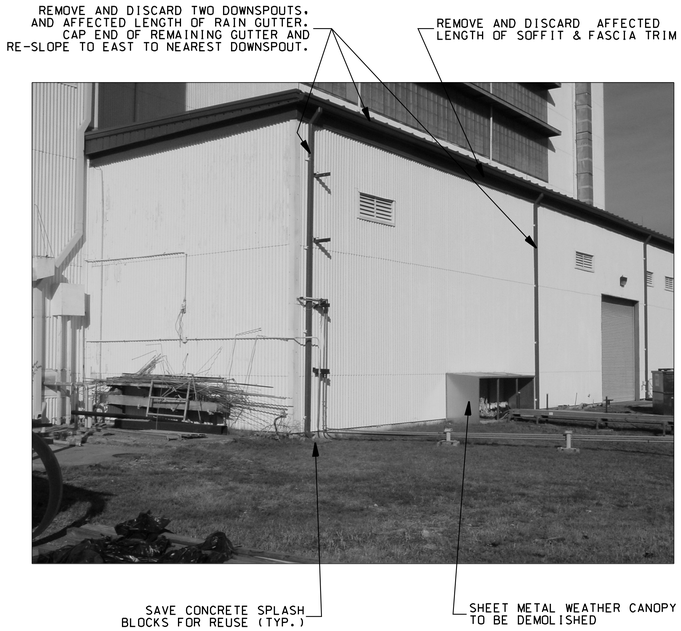

BUILDING 4619
2 VIEW LOOKING NORTHEAST
N.T.S.

BUILDING 4619
3 WALL CLOSEUP VIEW
N.T.S.

BUILDING 4619
4 SITE CLOSEUP VIEW
N.T.S.

BUILDING 4619
5 SITE PANORAMA VIEW
N.T.S.

REDUCED SIZE DRAWING
DO NOT SCALE

CADD DRAWING
CHANGES TO THIS DRAWING SHALL BE MADE ON CADD ONLY.
477159 / 08-18-03 / DWA
LATEST CADD UPDATE: 12-12-05 12:45 PM
BY: SAMANIEGO

CONCURRENCE: DATE:
AD21 PLANNING OFFICE
CONCURRENCE: DATE:
AD22 PROJECT MANAGER
CONCURRENCE: DATE: 02-24-04
JOE P. EDMONDSON
AD80 ENVIRONMENTAL ENGINEERING DEPT
CONCURRENCE: DATE:
USING OFFICE
CONCURRENCE: DATE: 02-20-04
JAMES K. SHARP
AD24 OPERATIONS & MAINTENANCE GROUP
CONCURRENCE: DATE: 02-20-04
SCOTT PINKSTON
AD60 ENVIRONMENTAL HEALTH
CONCURRENCE: DATE: 02-24-04
DENNIS S. DAVIS
OD50 SAFETY OFFICE
CONCURRENCE: DATE: 02-20-04
CHARLES B. WINKLER
AD32 COMMUNICATIONS OFFICE
TELECOMMUNICATIONS EQUIPMENT AFFECTED BY THIS CONTRACT WORK IS NOT TO BE ALTERED OR REMOVED BY THE CONTRACTOR. CONTACT THE COTR IN THE EVENT OF A CONFLICT
REF. NO. S-1D OF 9

REV.	BY	DATE	REVISION	C.J. NO.	APPROVED
1	RTS	12-12-05	AS-BUILT	477159	JC 12-12-05

Marshall Space Flight Center
Huntsville, Alabama 35812

WORK REQUEST NO. 477159

BUILDING 4619
TENSILE TEST LAB BUILDING ADDITION
EXTERIOR DEMOLITION REQUIREMENTS PHOTOS

AE FIRM: AJT & ASSOCIATES, INC. HUNTSVILLE - ALABAMA
NASA AE CONTRACT NO. NAS8-00144

SUBMITTED: DAVID A. SELLERS
AE: DATE: 01-21-04
DESIGNED: D. ANDERSON
DRAWN: D. ANDERSON
CHECKED: D. SELLERS
SCALE: AS NOTED

APPROVAL RECOMMENDED: DAVID L. MARTIN
AD22 PROJ. A/E: DATE: 02-23-04
APPROVAL RECOMMENDED: ROBERT S. TALIANKO, AJT & ASSOCIATES, INC.
AD22 TEAM LEAD: DATE: 02-26-04
SPEC. NO. TSRC-5

APPROVED: R. B. FELDER
AD22 GROUP LEAD: DATE: 02-26-04

DRAWING NO. FAC-FF-4619-SID
SHEET 9 OF 27

MSFC-FORM 232 REV. 8-21-89-RCL

MSFC MASTER BID DISK 11-18-2013

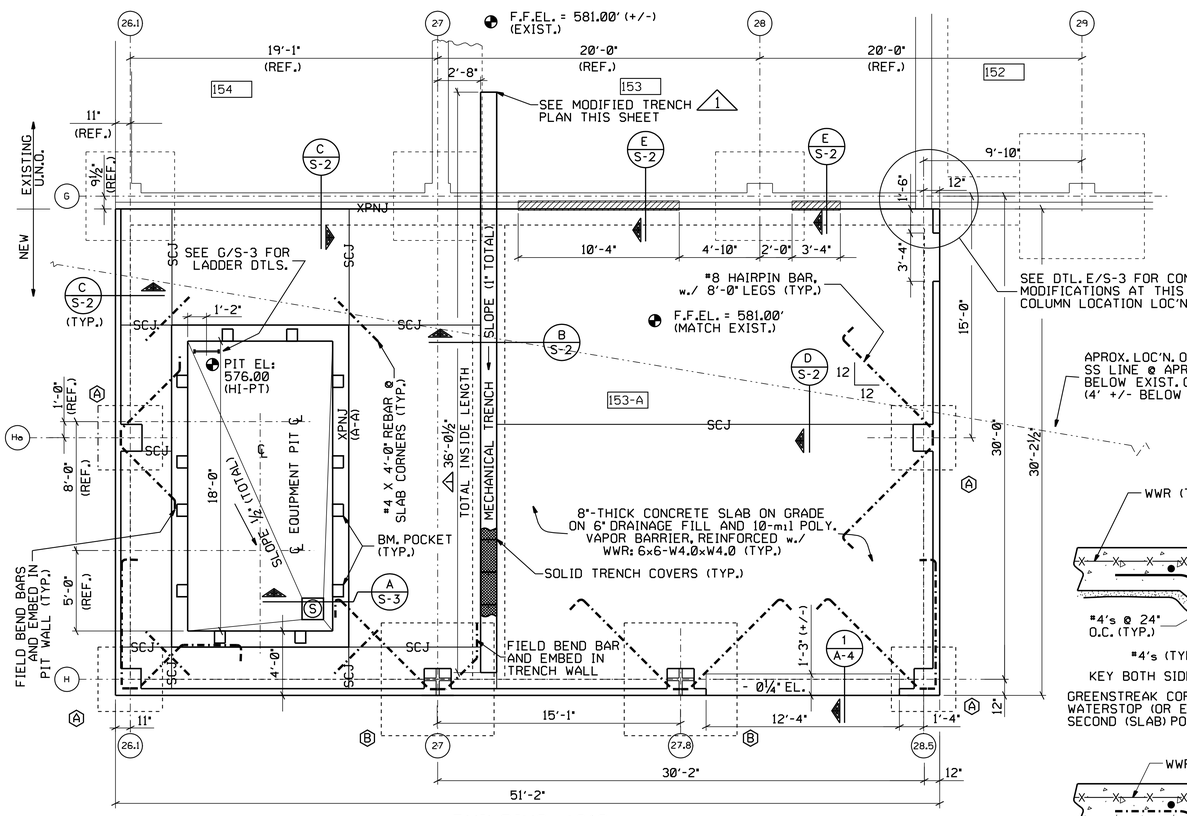

BUILDING 4619 NEW FOUNDATION PLAN

SCALE: ¼" = 1'-0"

(SCJ = SAWCUT CONTROL JOINT)
(XPNJ = EXPANSION JOINT)

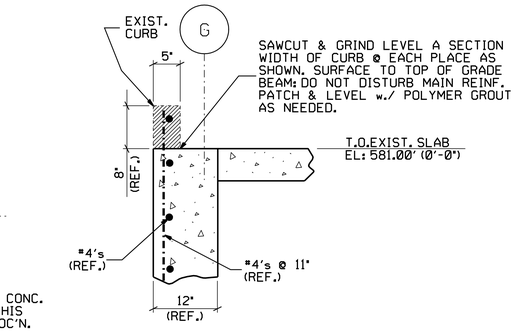

CURB DEMO. DETAILS

SCALE: 1" = 1'-0"

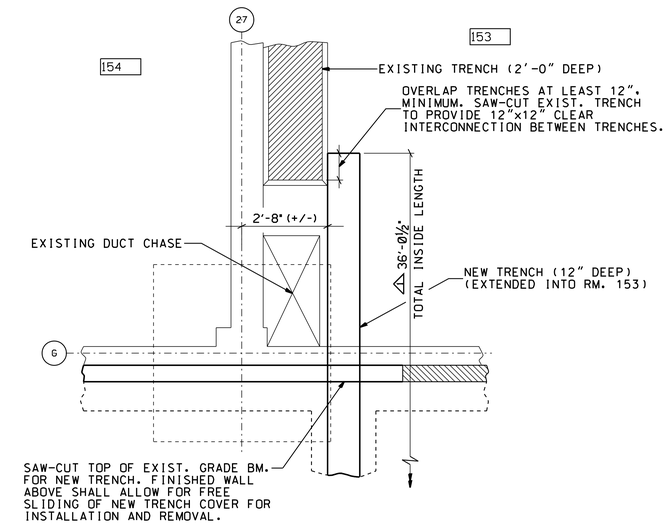

BUILDING 4619 MODIFIED TRENCH PLAN

SCALE: ¼" = 1'-0"

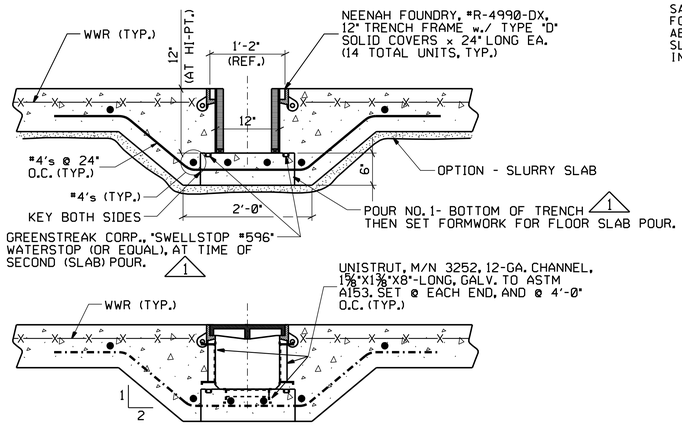

MECH. TRENCH DETAILS

SCALE: 1" = 1'-0"

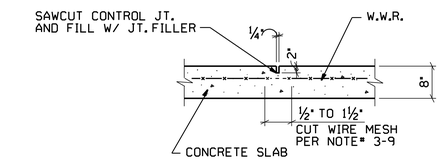

TYP. SAWCUT CONTROL JT.

SCALE: N.T.S.

(SCJ = SAWCUT CONTROL JOINT)

FLATNESS / LEVELNESS CHART FOR SLABS (PER ASTM E1155-96 (2001))		
ROOM OR AREA	FLATNESS / LEVELNESS VALUES (F_F / F_L)	
	S.O.V.	M.L.V.
153A	35 / 20	20 / 15
PIT FLOOR	25 / 15	15 / 10

NOTE: ALL INTERIOR SLABS TO BE COATED WITH A LOW-VOC, WATER-BASED, ACRYLIC CURE & SEAL COMPOUND MEETING REQUIREMENTS OF ASTM C309, TYPE 1, CLASS B, AND ASTM C1315, TYPE 1, CLASS A.

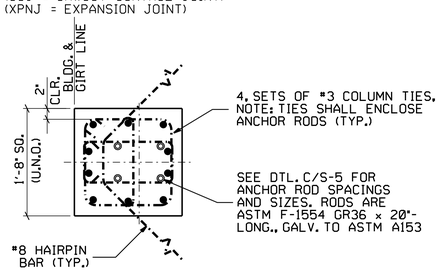

PIER REINFORCMENT DETAILS

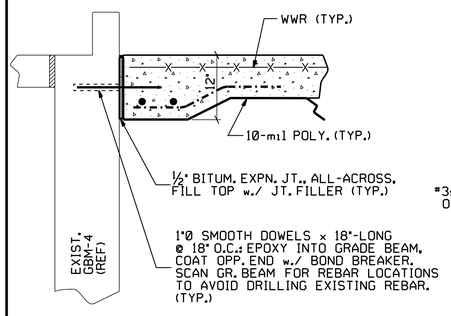

ADJOINING EXIST. BLDG.

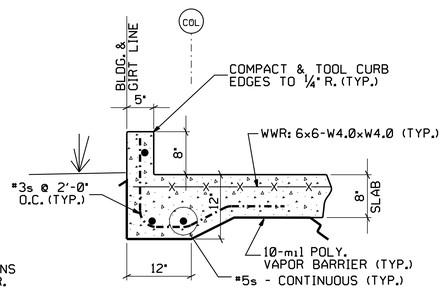

AT NEW EDGES

TYP. SLAB EDGE DETAILS

SCALE: 1" = 1'-0"

NOTE:
DIM "A" = 12" (TYP.)
DIM "A" = 11" @ COL. LINE 26.1

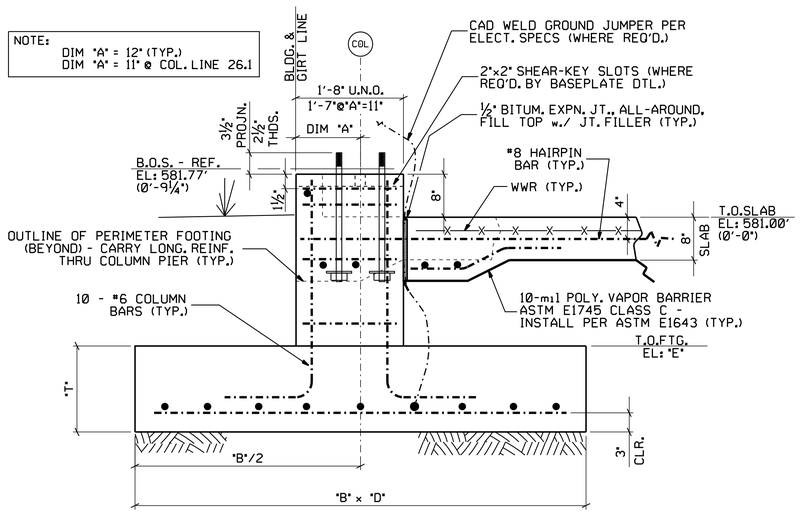

COLUMN FOOTING TYP. DETAILS

SCALE: 1" = 1'-0"

SEE CHART AT RIGHT FOR TYPICAL DIMENSIONS

COLUMN FOOTING SCHEDULE

FOOTING ID MARK	TOP OF FOOTING ELEVATION "E"	WIDTH "B"	DEPTH "D"	THICKNESS "T"	"BARS B"	HOOK ?	"BARS B"	HOOK ?	NOTES
Ⓐ	579.00'	4'-0"	4'-0"	12"	6 - #4's	NO	6 - #4's	NO	
Ⓑ	579.00'	7'-0"	7'-0"	16"	8 - #5's	NO	8 - #5's	NO	w./ SHEAR KEYS

REDUCED SIZE DRAWING

DO NOT SCALE

CADD DRAWING

CHANGES TO THIS DRAWING SHALL BE MADE ON CADD ONLY.
477159 08-18-03 DWA
LATEST CADD UPDATE: 02-02-06 01:00 PM
BY: R.T. SAMANIEGO

REV.	BY	DATE	REVISION	C.N. NO.	APPROVED
1	RTS	02-02-06	AS-BUILT PER RED-LINED DRAWING	477159	JC 02-02-06

CONCURRENCE: DATE:
AD21 PLANNING OFFICE
AD22 PROJECT MANAGER
JOE P. EDMONDSON — DATE: 02-24-04
ADIO ENVIRONMENTAL ENGINEERING DEPT
USING OFFICE
JAMES K. SHARP — DATE: 02-20-04
AD24 OPERATIONS & MAINTENANCE GROUP
SCOTT PINKSTON — DATE: 02-20-04
AD60 ENVIRONMENTAL HEALTH
DENNIS S. DAVIS — DATE: 02-24-04
GD50 SAFETY OFFICE
CHARLES B. WINKLER — DATE: 02-20-04
AD32 COMMUNICATIONS OFFICE

Marshall Space Flight Center
Huntsville, Alabama 35812

WORK REQUEST NO. 477159

BUILDING 4619
TENSILE TEST LAB BUILDING ADDITION
FOUNDATION PLAN & DETAILS

AE FIRM: AJT & ASSOCIATES, INC. HUNTSVILLE - ALABAMA
NASA AE CONTRACT NO. NAS8-00144
SUBMITTED: DAVID A. SELLERS
APPROVAL RECOMMENDED: DAVID L. MARTIN
APPROVED: R. B. FELDER
AE: DATE: 01-21-04
AD22 PROJ. A/E — DATE: 02-23-04
AD22 GROUP LEAD — DATE: 02-26-04
DESIGNED: D. ANDERSON
DRAWN: D. ANDERSON
CHECKED: D. SELLERS
APPROVAL RECOMMENDED: ROBERT S. TALIANKO AJT & ASSOCIATES, INC.
AD22 TEAM LEAD — DATE: 02-26-04
SCALE: AS NOTED
SPEC. NO. TSRC-5
DRAWING NO. FAC-FF-4619-S2
SHEET 10 OF 27
REF. NO. S-2 OF 9

THE CONTENTS OF THIS DRAWING ARE THE PROPERTY OF THE GOVERNMENT. ANY REPRODUCTION OR USE OF THIS DRAWING FOR PURPOSES OTHER THAN THOSE AUTHORIZED BY THE GOVERNMENT IS PROHIBITED.

MSFC-FORM 232 REV. 8-21-89-RCL

MSFC MASTER BID DISK 11-18-2013

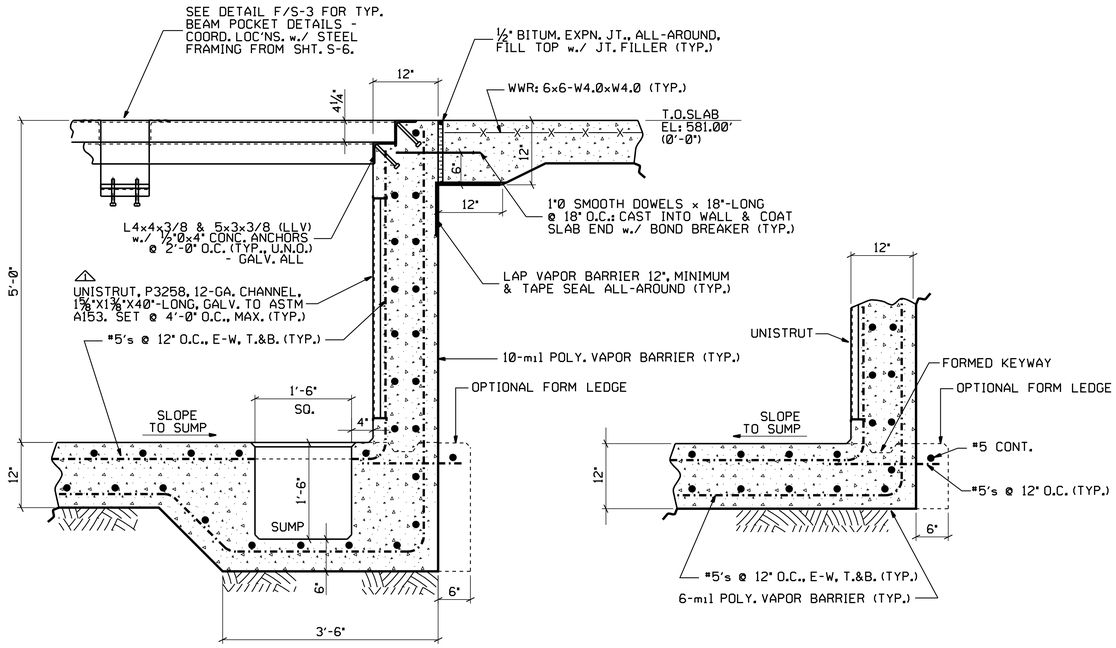

SECTION @ SUMP

TYPICAL SECTION

A S-3 PIT WALL DETAILS
SCALE: 1" = 1'-0" 0 1' 2'

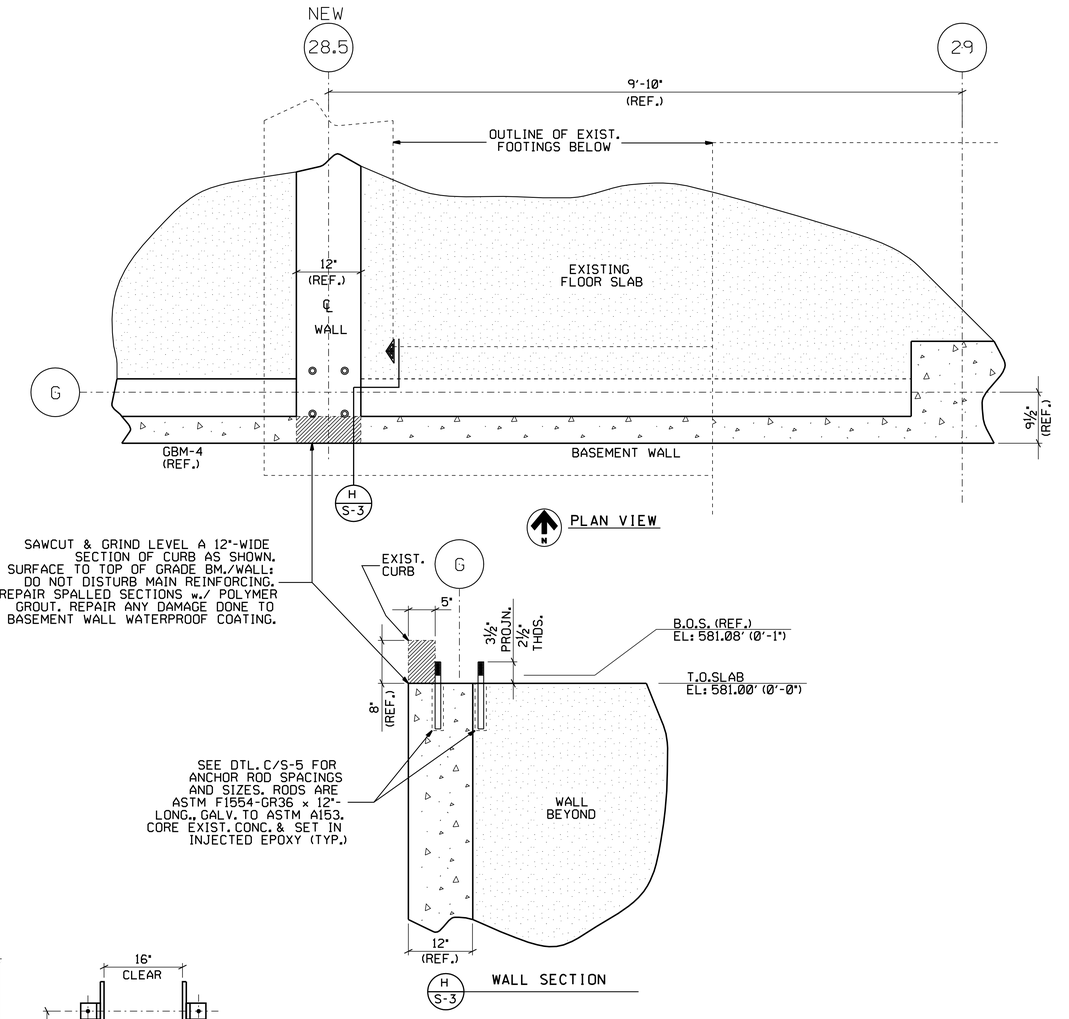

E S-3 CONCRETE WALL MODS. @ COL. G/28.5
SCALE: 1" = 1'-0" 0 1' 2'

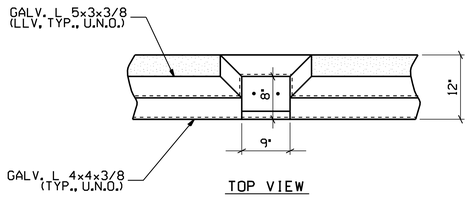

TOP VIEW

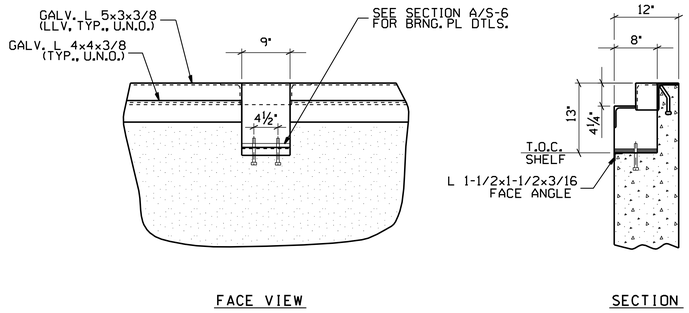

FACE VIEW

SECTION

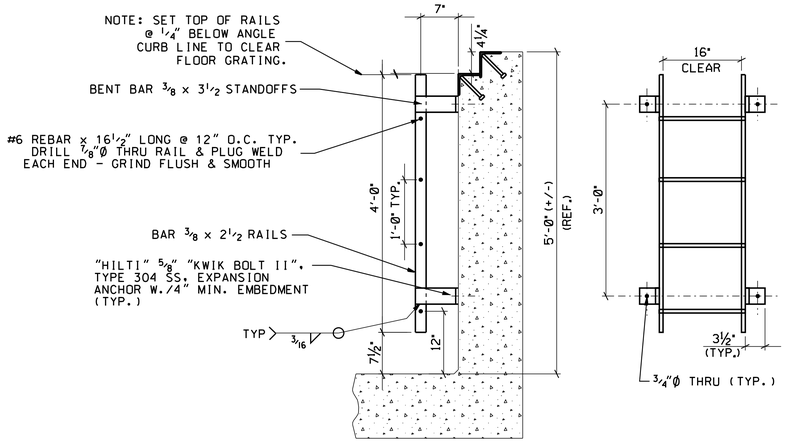

SECTION

FACE VIEW

F S-3 BEAM POCKET DETAILS
SCALE: 1" = 1'-0" 0 1' 2'
(REBAR NOT SHOWN FOR CLARITY)

G S-3 PIT LADDER DETAILS
SCALE: 1" = 1'-0" 0 1' 2'
(GRIND SMOOTH ALL SHARP OR PROTRUDING EDGES & CORNERS.)
(HOT-DIP GALVANIZE AFTER ASSEMBLY.)
(WALL REBAR NOT SHOWN FOR CLARITY.)

REDUCED SIZE DRAWING
DO NOT SCALE

CADD DRAWING
CHANGES TO THIS DRAWING SHALL BE MADE ON CADD ONLY.
477159 08-18-03 DWA
LATEST CADD UPDATE: 02-02-06 08:30 AM
BY: R.T. SAMANIEGO

REV.	BY	DATE	REVISION	C.N. NO.	APPROVED
1	RTS	01-18-06	AS-BUILT PER RED LINED DRAWINGS	477159	JC 01-18-06

CONCURRENCE: AD21 PLANNING OFFICE DATE:
CONCURRENCE: AD22 PROJECT MANAGER DATE: 02-24-04
JOE P. EDMONDSON, AD10 ENVIRONMENTAL ENGINEERING DEPT
CONCURRENCE: USING OFFICE DATE: 02-20-04
JAMES K. SHARP, AD24 OPERATIONS & MAINTENANCE GROUP
CONCURRENCE: DATE: 02-20-04
SCOTT PINKSTON, AD60 ENVIRONMENTAL HEALTH
CONCURRENCE: DATE: 02-24-04
DENNIS S. DAVIS, OD50 SAFETY OFFICE
CONCURRENCE: DATE: 02-20-04
CHARLES B. WINKLER, AD32 COMMUNICATIONS OFFICE
TELECOMMUNICATIONS EQUIPMENT AFFECTED BY THIS CONTRACT WORK IS NOT TO BE ALTERED OR REMOVED BY THE CONTRACTOR. CONTACT THE COTR IN THE EVENT OF A CONFLICT
REF. NO. S-3 OF 9

Marshall Space Flight Center
Huntsville, Alabama 35812

WORK REQUEST NO. 477159

BUILDING 4619
TENSILE TEST LAB BUILDING ADDITION
FOUNDATION DETAILS

AE FIRM: AJT & ASSOCIATES, INC. HUNTSVILLE - ALABAMA			NASA AE CONTRACT NO. NASA-00144
SUBMITTED: DAVID A. SELLERS		APPROVAL RECOMMENDED: DAVID L. MARTIN	APPROVED: R. B. FELDER
AE:	DATE: 01-21-04	AD22 PROJ. A/E DATE: 02-23-04	AD22 GROUP LEAD DATE: 02-26-04
DESIGNED: D. ANDERSON		APPROVAL RECOMMENDED: ROBERT S. TALIANKO AJT & ASSOCIATES, INC.	DRAWING NO. FAC-FF-4619-S3
DRAWN: D. ANDERSON			
CHECKED: D. SELLERS		AD22 TEAM LEAD DATE: 02-26-04	SHEET 11 OF 27
SCALE: AS NOTED		SPEC. NO. TSRC-5	

MSFC-FORM 232 REV. 8-21-89-RCL

MSFC MASTER BID DISK 11-18-2013

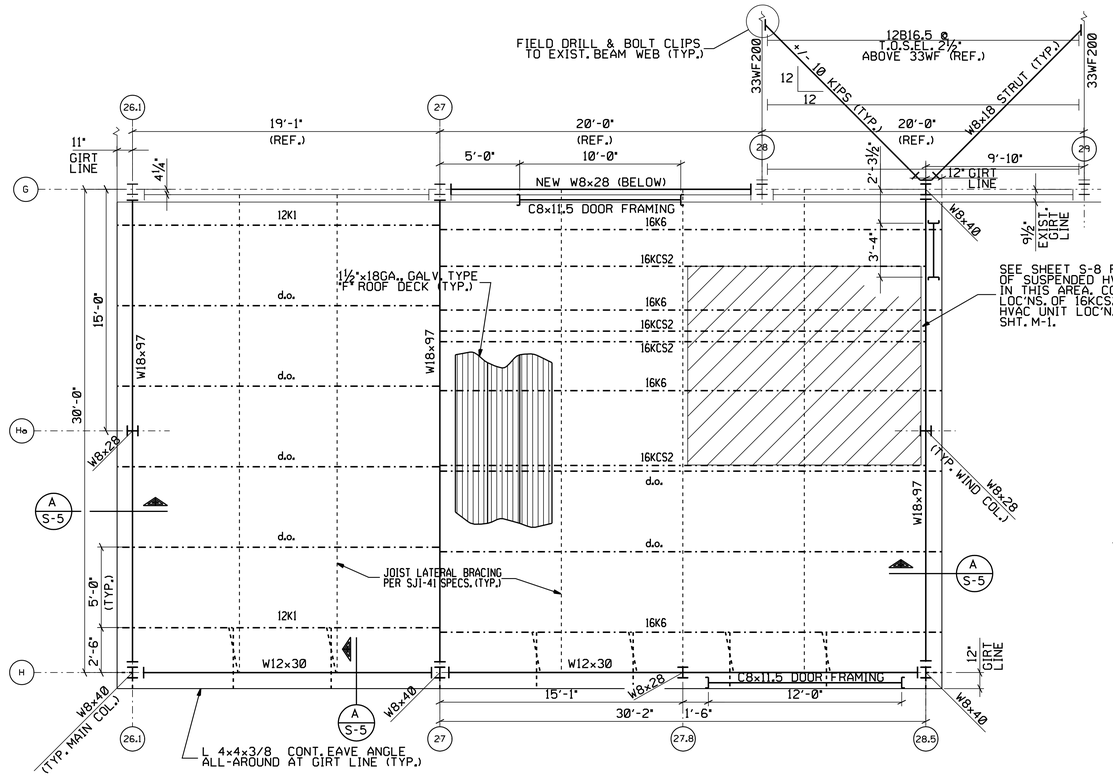

BUILDING ADDITION ROOF FRAMING PLAN

SCALE: ¼" = 1'-0"

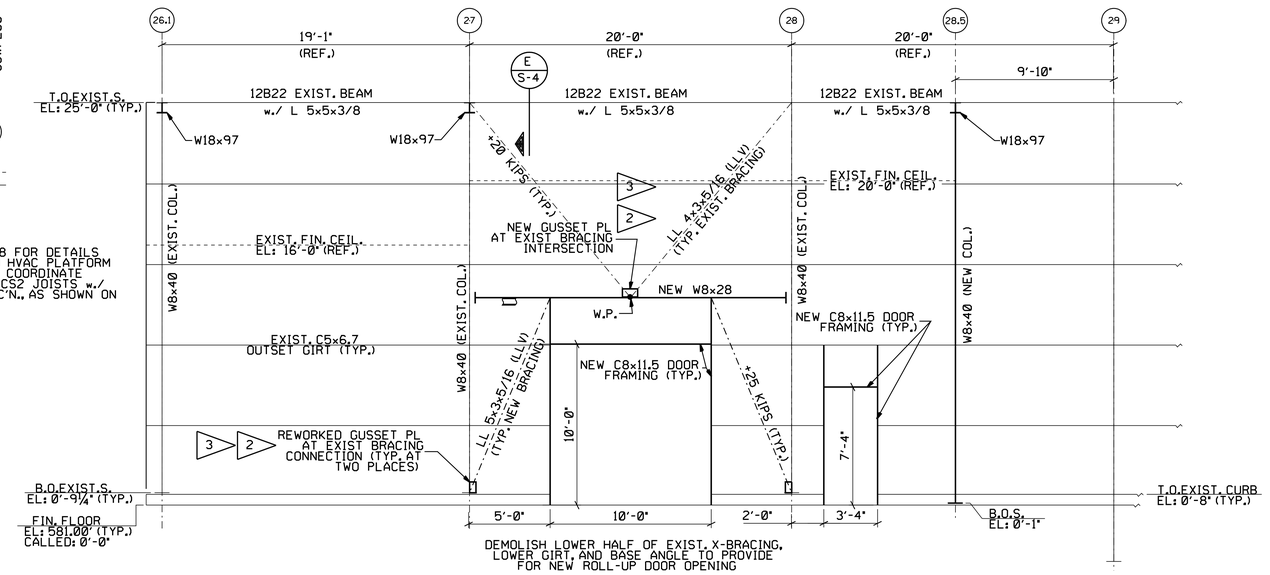

MODIFIED FRAMING ELEVATION ALONG EXIST. COLUMN LINE "G"

SCALE: ¼" = 1'-0"

NOTE: REFER TO EXIST. STRUCTURAL DRAWINGS: F&D-C-4619-S1 TO S12

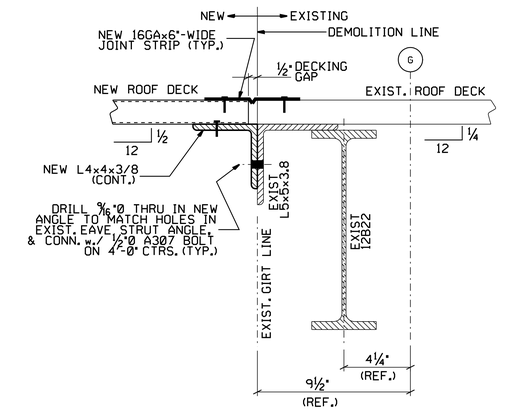

TYPICAL DETAILS ROOF AT EXIST. EAVE

E / S-4 — SCALE: 3" = 1'-0"

1. SHEAR CONNECTION ONLY AT TOP OF INDICATED COLUMNS - NO AXIAL LOAD TRANSFER ALLOWED (TYP. OF ALL THUS MARKED)
2. FABRICATOR SHALL INCLUDE NEW GUSSET DETAILS IN SHOP DRAWINGS, AFTER FIELD VERIFICATION AND MEASUREMENT OF EXISTING.
3. ALL WIND BRACING JOINTS SHALL BE DETAILED AS 'TYPE FT' FULLY-TENSIONED JOINTS, PER NOTE 5-13, ON SHEET S-1 (TYP.)

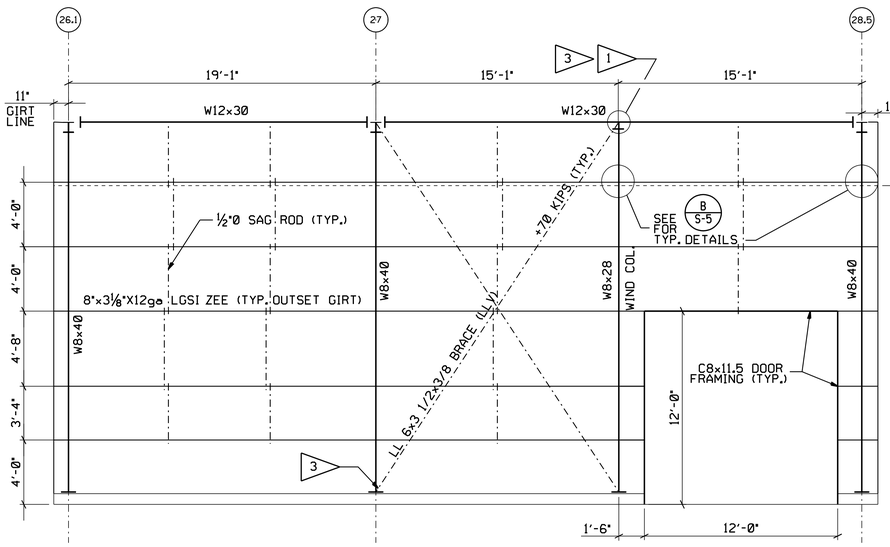

FRAMING ELEVATION ALONG COLUMN LINE "H"

SCALE: ¼" = 1'-0"

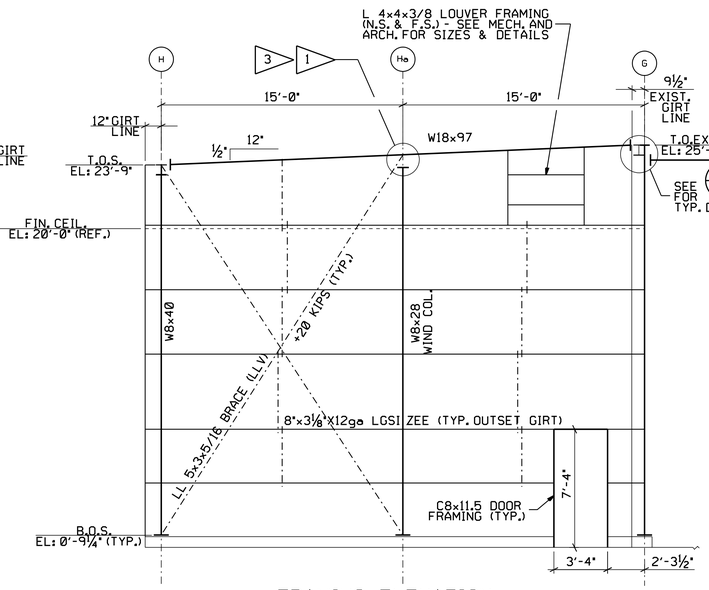

FRAMING ELEVATION ALONG COLUMN LINE "28.5"

SCALE: ¼" = 1'-0"

(F.S. WALL IS IDENTICAL, BUT w/o DOOR FRAME)

(SEE ARCH. SHEETS FOR DETAILS OF DEMOLITION & REPAIR OF CMU BLOCK WALL ADJACENT TO COL. LINE 28.5.)

NOTE: ALL STRUCTURAL LOADS ARE GIVEN AS AISC-LRFD FACTORED LOADS.

REDUCED SIZE DRAWING

DO NOT SCALE

CADD DRAWING

CHANGES TO THIS DRAWING SHALL BE MADE ON CADD ONLY.

477159 — 08-18-03 DWA

LATEST CADD UPDATE: 12-12-05 03:00 PM BY: SAMANIEGO

REV.	BY	DATE	REVISION	C.I. NO.	APPROVED
1	RTS	12-12-05	AS-BUILT	477159	JC 12-12-05

CONCURRENCE: AD21 PLANNING OFFICE — DATE:

CONCURRENCE: AD22 PROJECT MANAGER — DATE:

CONCURRENCE: JOE P. EDMONDSON, AD10 ENVIRONMENTAL ENGINEERING DEPT — DATE: 02-24-04

CONCURRENCE: USING OFFICE — DATE:

CONCURRENCE: JAMES K. SHARP, AD24 OPERATIONS & MAINTENANCE GROUP — DATE: 02-20-04

CONCURRENCE: SCOTT PINKSTON, AD60 ENVIRONMENTAL HEALTH — DATE: 02-20-04

CONCURRENCE: DENNIS S. DAVIS, OD50 SAFETY OFFICE — DATE: 02-24-04

CONCURRENCE: CHARLES B. WINKLER, AD32 COMMUNICATIONS OFFICE — DATE: 02-20-04

TELECOMMUNICATIONS EQUIPMENT AFFECTED BY THIS CONTRACT WORK IS NOT TO BE ALTERED OR REMOVED BY THE CONTRACTOR. CONTACT THE COTR IN THE EVENT OF A CONFLICT

REF. NO. S-4 OF 9

Marshall Space Flight Center
Huntsville, Alabama 35812

WORK REQUEST NO. 477159

BUILDING 4619
TENSILE TEST LAB BUILDING ADDITION
STEEL FRAMING PLAN & ELEVATIONS

AE FIRM: AJT & ASSOCIATES, INC. HUNTSVILLE - ALABAMA		NASA AE CONTRACT NO. NAS8-00144
SUBMITTED: DAVID A. SELLERS	APPROVAL RECOMMENDED: DAVID L. MARTIN	APPROVED: R. B. FELDER
AE: DATE: 01-21-04	AD22 PROJ. A/E DATE: 02-23-04	AD22 GROUP LEAD DATE: 02-26-04
DESIGNED: D. ANDERSON; DRAWN: D. ANDERSON; CHECKED: D. SELLERS	APPROVAL RECOMMENDED: ROBERT S. TALIANKO, AJT & ASSOCIATES, INC.	DRAWING NO. FAC-FF-4619-S4
SCALE: AS NOTED	AD22 TEAM LEAD DATE: 02-26-04	SHEET 12 OF 27
	SPEC. NO. TSRC-5	

MSFC-FORM 232 REV. 8-21-89 (MCL)

MSFC MASTER BID DISK 11-18-2013

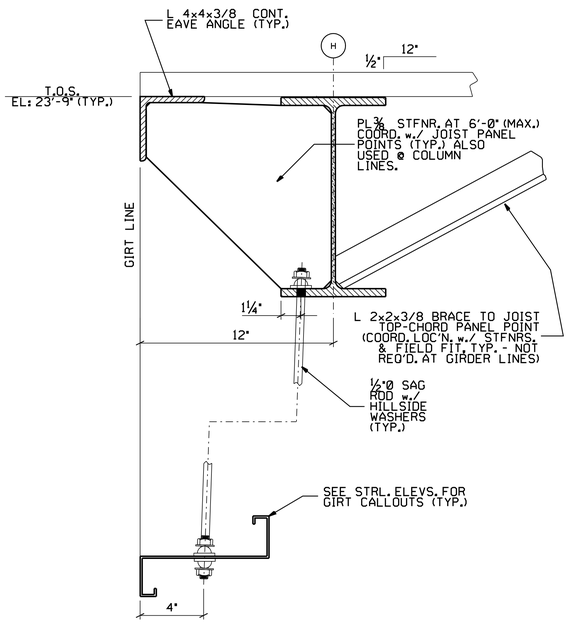

AT W12x30

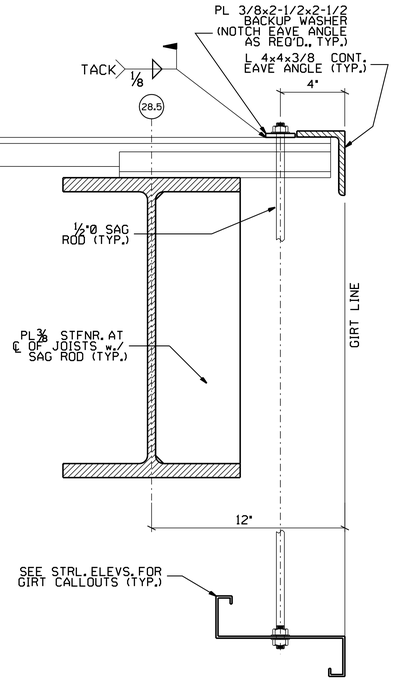

AT W18x97 w./ 12" GIRT LINE

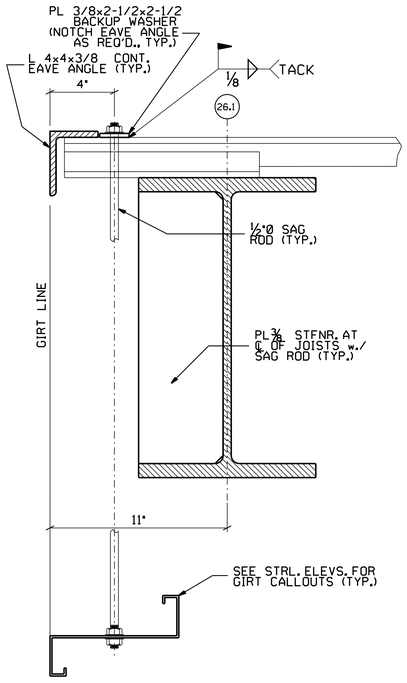

AT W18x97 w./ 11" GIRT LINE

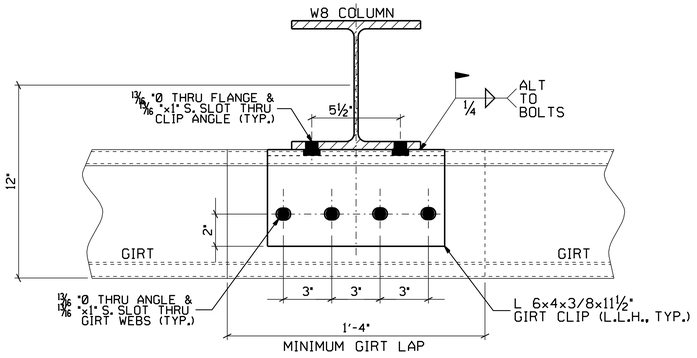

AT COLUMNS

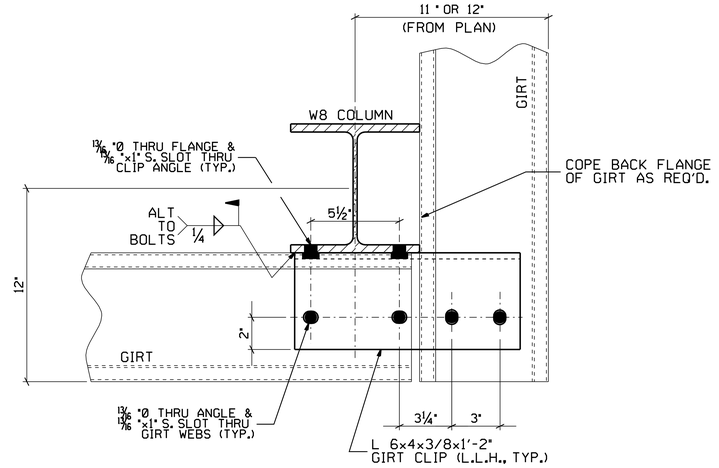

AT CORNERS

GIRT CLIPS
B S-5 TYPICAL DETAILS
SCALE: 3" = 1'-0" 0 2" 4" 6" 8"

SEE STRL. ELEVS. FOR GIRT CALLOUTS (TYP.) - NEW GIRTS CONNECTING TO EXISTING COLUMNS ARE SIMILAR TO CORNER GIRT DETAILS

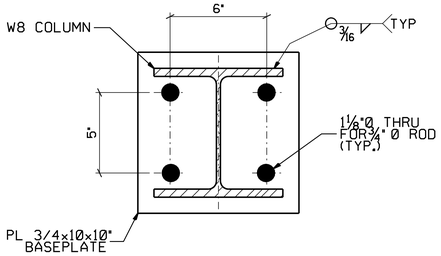

TYPICAL - U.N.O.

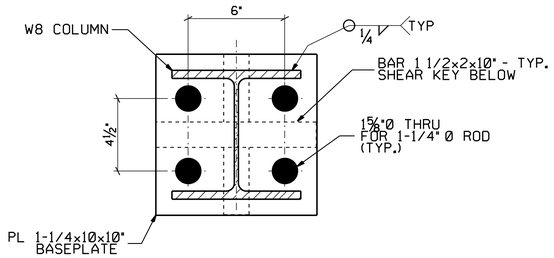

AT COLS. H/27 & 27.8

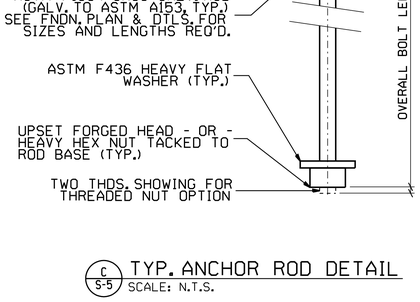

C S-5 TYP. ANCHOR ROD DETAIL
SCALE: N.T.S.

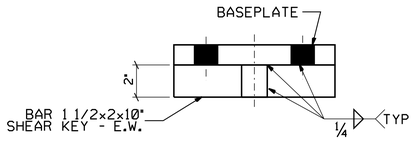

EDGE VIEW

TYPICAL DETAILS
A S-5 NEW EAVE STRUTS
SCALE: 3" = 1'-0" 0 2" 4" 6" 8"

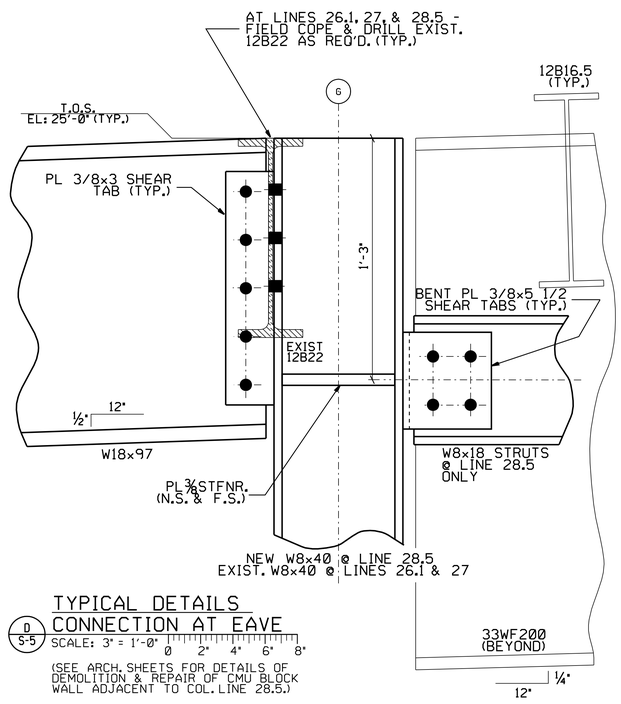

TYPICAL DETAILS
D S-5 CONNECTION AT EAVE
SCALE: 3" = 1'-0" 0 2" 4" 6" 8"

(SEE ARCH. SHEETS FOR DETAILS OF DEMOLITION & REPAIR OF CMU BLOCK WALL ADJACENT TO COL. LINE 28.5.)

C S-5 TYP. BASEPLATE DETAILS
SCALE: 3" = 1'-0" 0 2" 4" 6" 8"

REDUCED SIZE DRAWING
DO NOT SCALE

CADD DRAWING
CHANGES TO THIS DRAWING SHALL BE MADE ON CADD ONLY.
477159 08-18-03 DWA
LATEST CADD UPDATE: 05-03-07 03:00 PM BY: B. THOMPSON

CONCURRENCE:	DATE:
CONCURRENCE:	DATE:
CONCURRENCE:	DATE:
AD21 PLANNING OFFICE	
CONCURRENCE:	DATE:
AD22 PROJECT MANAGER	
CONCURRENCE:	DATE: 02-24-04
JOE P. EDMONDSON	
AD10 ENVIRONMENTAL ENGINEERING DEPT	
CONCURRENCE:	DATE:
USING OFFICE	
CONCURRENCE:	DATE: 02-20-04
JAMES K. SHARP	
AD24 OPERATIONS & MAINTENANCE GROUP	
CONCURRENCE:	DATE: 02-20-04
SCOTT PINKSTON	
AD60 ENVIRONMENTAL HEALTH	
CONCURRENCE:	DATE: 02-24-04
DENNIS S. DAVIS	
QD50 SAFETY OFFICE	
CONCURRENCE:	DATE: 02-20-04
CHARLES B. WINKLER	
AD32 COMMUNICATIONS OFFICE	

TELECOMMUNICATIONS EQUIPMENT AFFECTED BY THIS CONTRACT WORK IS NOT TO BE ALTERED OR REMOVED BY THE CONTRACTOR. CONTACT THE COTR IN THE EVENT OF A CONFLICT

REF. NO. S-5 OF 9

REV.	BY	DATE	REVISION	C.I. NO.	APPROVED
1	RTS	02-02-06	AS-BUILT PER RED-LINED DRAWING	477159	

NASA

Marshall Space Flight Center
Huntsville, Alabama 35812

WORK REQUEST NO. 477159

BUILDING 4619
TENSILE TEST LAB BUILDING ADDITION
STEEL FRAMING SECTIONS & DETAILS

AE FIRM:	AJT & ASSOCIATES, INC. HUNTSVILLE - ALABAMA	NASA AE CONTRACT NO. NAS8-00144
SUBMITTED: DAVID A. SELLERS	APPROVAL RECOMMENDED: DAVID L. MARTIN	APPROVED: R. B. FELDER
AE: DATE: 01-21-04	AD22 PROJ. A/E DATE: 02-23-04	AD22 GROUP LEAD DATE: 02-26-04
DESIGNED: D. ANDERSON	APPROVAL RECOMMENDED: ROBERT S. TALIANKO AJT & ASSOCIATES, INC.	DRAWING NO. FAC-FF-4619-S5
DRAWN: D. ANDERSON		
CHECKED: D. ANDERSON	AD22 TEAM LEAD DATE: 02-26-04	
SCALE: AS NOTED	SPEC. NO. TSRC-5	SHEET 13 OF 27

MSFC-FORM 232 REV. 8-21-95-RCL

MSFC MASTER BID DISK 11-18-2013

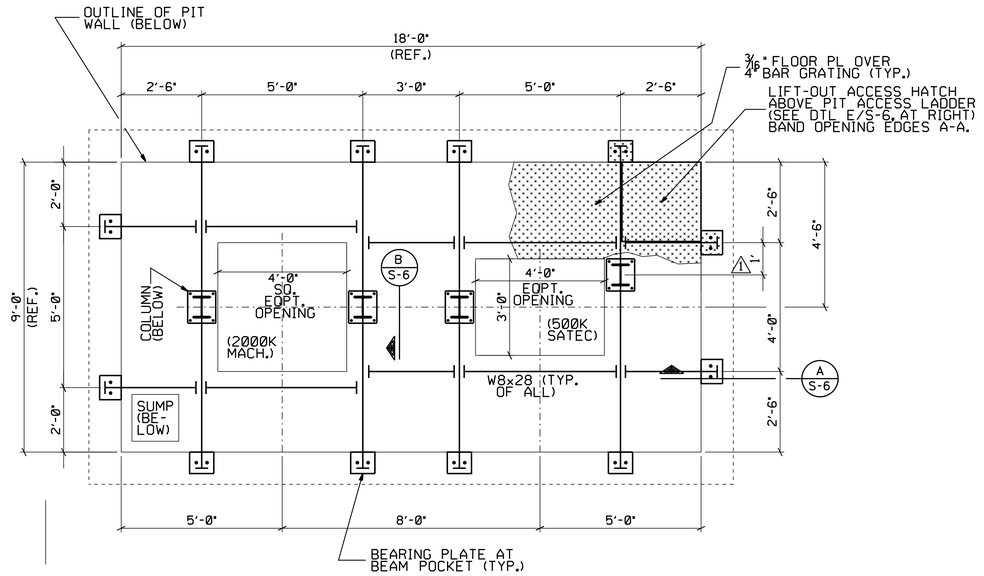

STEEL FLOOR FRAMING @ PIT

SCALE: ½" = 1'-0" 0 1' 2' 3'

(SEE SECTION B/S-6 FOR TYPICAL DETAILS)

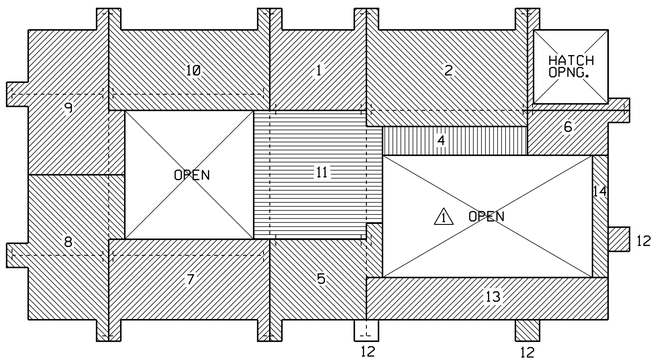

FLOOR PLATE SECTIONS PLAN

SCALE: ½" = 1'-0" 0 1' 2' 3'

NOTE:

BAR GRATING SHALL BE McNICHOLS, SERIES "GHB", 4" X ¼", HEAVY-WELD PLAIN STEEL, OR EQUAL. PAINT YELLOW EXPOSED BANDED EDGES AND TOE ANGLES ONLY.

LAY BAR GRATING ACROSS SHORT SPAN BETWEEN BEAMS; MAXIMUM SPAN = 3'-0" (TYPICALLY FROM WALL TO OPENING)

PLATE-COVERED GRATING SHALL BE LAID IN SECTIONS BY NUMBER AS SHOWN TO FACILITATE FUTURE REMOVAL FOR EQUIPMENT SERVICING. LABEL SECTIONS WITH CLEARLY PAINTED, 3"-HIGH YELLOW NUMBER ON BOTTOM OF PLATE SECTION.

PLATE ALLOWABLE LOAD IS 26,000# AXLE LOAD, BASED ON 11,000# CAPACITY, GAS-POWERED FORK LIFT.

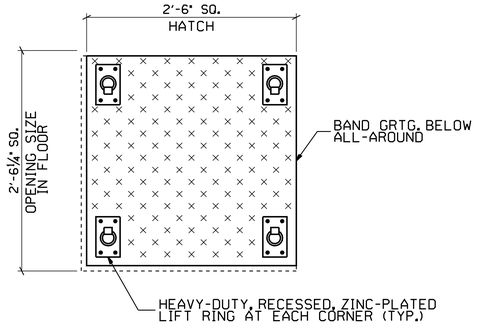

E/S-6 PIT ACCESS HATCH DETAIL

SCALE: N.T.S.

(APPROXIMATE WEIGHT = 250 POUNDS)

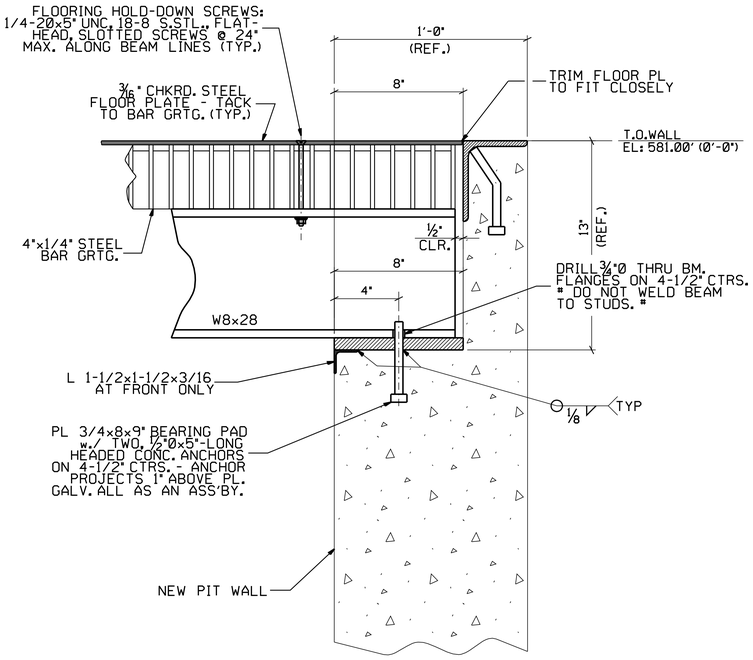

A/S-6 BEAM BEARING DETAILS

SCALE: 3" = 1'-0" 0 2" 4" 6" 8"

(REBAR NOT SHOWN FOR CLARITY.)

B/S-6 TYPICAL ASSEMBLY DETAILS

SCALE: 3" = 1'-0" 0 2" 4" 6" 8"

D/S-6 COLUMN BASE DETAIL

SCALE: 3" = 1'-0" 0 2" 4" 6" 8"

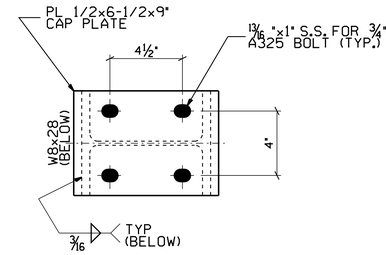

C/S-6 COLUMN CAP DETAIL

SCALE: 3" = 1'-0" 0 2" 4" 6" 8"

REDUCED SIZE DRAWING	CADD DRAWING
DO NOT SCALE	CHANGES TO THIS DRAWING SHALL BE MADE ON CADD ONLY. 477159 08-18-03 DWA — LATEST CADD UPDATE: 05-03-07 02:00 PM — BY: B. THOMPSON

CONCURRENCE: DATE:
AD21 PLANNING OFFICE
AD22 PROJECT MANAGER
CONCURRENCE: DATE: 02-24-04
JOE P. EDMONDSON
AD10 ENVIRONMENTAL ENGINEERING DEPT
USING OFFICE
CONCURRENCE: DATE: 02-20-04
JAMES K. SHARP
AD24 OPERATIONS & MAINTENANCE GROUP
CONCURRENCE: DATE: 02-20-04
SCOTT PINKSTON
AD60 ENVIRONMENTAL HEALTH
CONCURRENCE: DATE: 02-24-04
DENNIS S. DAVIS
GD50 SAFETY OFFICE
CONCURRENCE: DATE: 02-20-04
CHARLES B. WINKLER
AD32 COMMUNICATIONS OFFICE
TELECOMMUNICATIONS EQUIPMENT AFFECTED BY THIS CONTRACT WORK IS NOT TO BE ALTERED OR REMOVED BY THE CONTRACTOR. CONTACT THE COTR IN THE EVENT OF A CONFLICT
REF. NO. S-6 OF 9

REV.	BY	DATE	REVISION	C.I. NO.	APPROVED
1	RTS	02-07-06	AS-BUILT PER RED-LINED DRAWINGS		

NASA — Marshall Space Flight Center, Huntsville, Alabama 35812

WORK REQUEST NO. 477159

BUILDING 4619

TENSILE TEST LAB BUILDING ADDITION

PIT FLOOR FRAME SECTIONS & DETAILS

AE FIRM: AJT & ASSOCIATES, INC. HUNTSVILLE - ALABAMA		NASA AE CONTRACT NO. NAS8-00144
SUBMITTED: DAVID A. SELLERS	APPROVAL RECOMMENDED: DAVID L. MARTIN	APPROVED: R. B. FELDER
AE: DATE: 01-21-04	AD22 PROJ. A/E DATE: 02-23-04	AD22 GROUP LEAD DATE: 02-26-04
DESIGNED: D. ANDERSON	APPROVAL RECOMMENDED: ROBERT S. TALIANKO AJT & ASSOCIATES, INC.	DRAWING NO.
DRAWN: D. ANDERSON	AD22 TEAM LEAD DATE: 02-26-04	FAC-FF-4619-S6
CHECKED: D. SELLERS	SPEC. NO. TSRC-5	SHEET 14 OF 27
SCALE: AS NOTED		

MSFC-FORM 232 REV. 8-21-89-PCL

MSFC MASTER BID DISK 11-18-2013

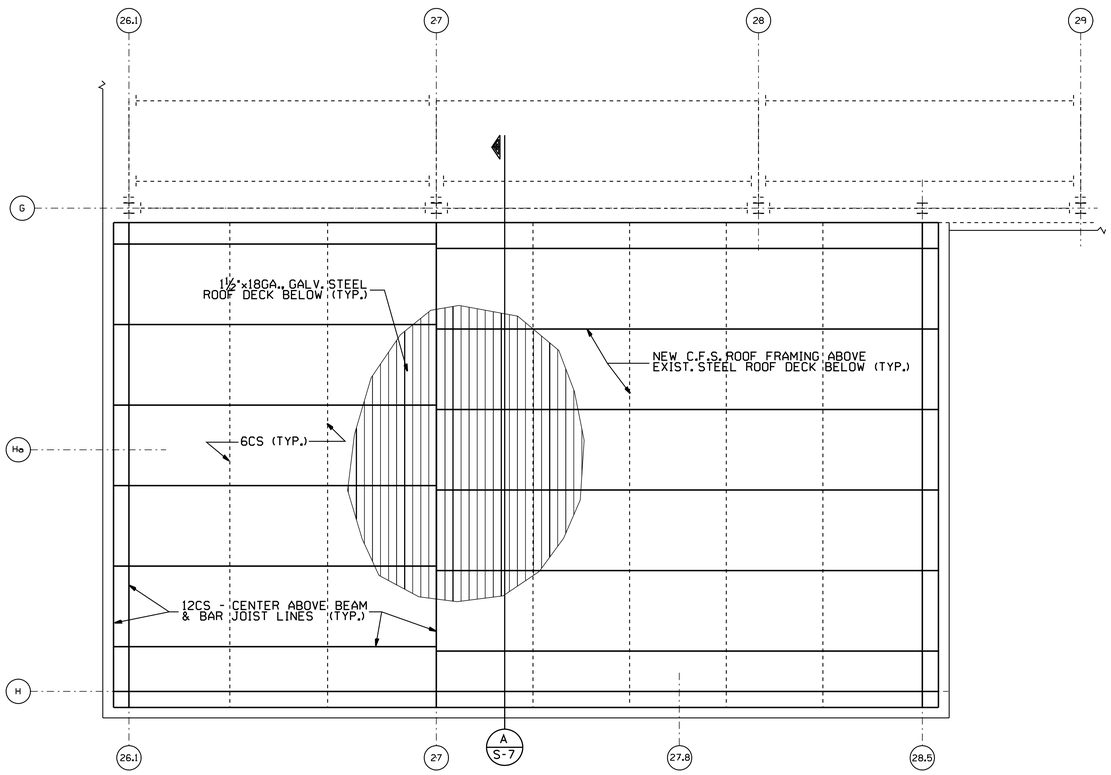

STANDING SEAM ROOF C.F.S. - FRAMING PLAN

SCALE: ¼" = 1'-0" 0 2' 4' 6'

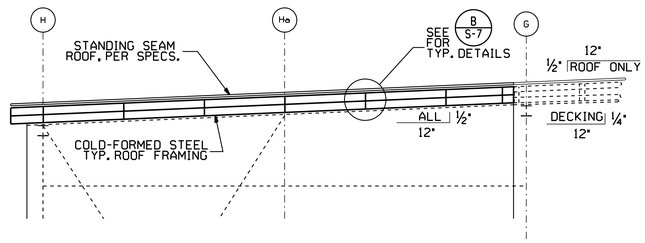

STANDING SEAM ROOF TYPICAL FRAMING SECTION

A S-7 SCALE: ¼" = 1'-0" 0 2' 4' 6'

ROOFING NOTES -

1. ROOFING SYSTEM VENDOR TO SUPPLY ALL MATERIALS AND ACCESSORIES REQUIRED AS A COMPLETE, VENDOR-DESIGNED SYSTEM.
2. MAXIMUM TYPICAL WIND UPLIFT LOADS ARE 20 PSF AT EAVES AND RAKES, AND 16 PSF ON INTERIOR OF ROOF.
3. ROOF SYSTEM VENDOR TO VERIFY STRUCTURAL ADEQUACY OF THE COLD-FORMED SUPPORT MEMBERS AND THEIR SPACINGS, AS SHOWN IN THE DRAWINGS. ADVISE THE COTR IF MODIFICATIONS ARE NECESSARY.

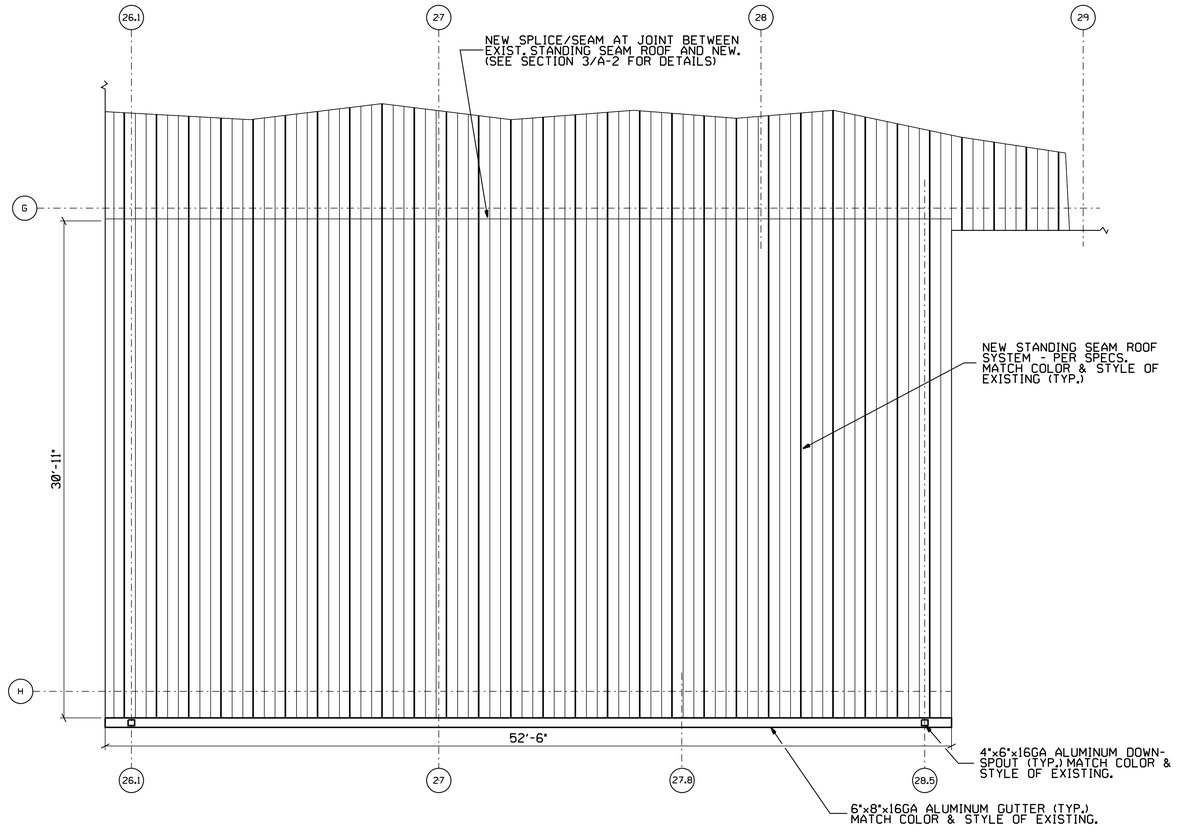

STANDING SEAM ROOF NEW WORK PLAN

SCALE: ¼" = 1'-0" 0 2' 4' 6'

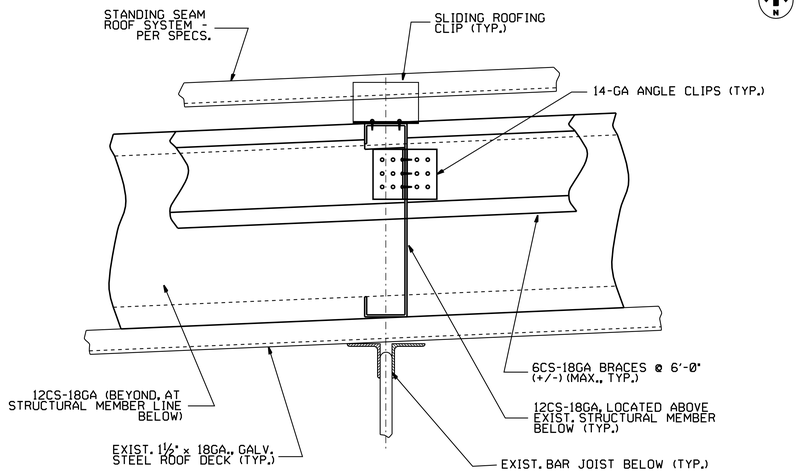

STANDING SEAM ROOF TYPICAL DETAILS

B S-7 SCALE: 3" = 1'-0" 0 2" 4" 6" 8"

REDUCED SIZE DRAWING

DO NOT SCALE

CADD DRAWING

CHANGES TO THIS DRAWING SHALL BE MADE ON CADD ONLY.

477159 08-18-03 DWA

LATEST CADD UPDATE: 12-12-05 02:00 PM

BY: SAMANIEGO

CONCURRENCE:	DATE:
CONCURRENCE:	DATE:
CONCURRENCE:	DATE:
AD21 PLANNING OFFICE	
CONCURRENCE:	DATE:
AD22 PROJECT MANAGER	
CONCURRENCE:	DATE: 02-24-04
JOE P. EDMONDSON	
AD10 ENVIRONMENTAL ENGINEERING DEPT	
CONCURRENCE:	DATE:
USING OFFICE	
CONCURRENCE:	DATE: 02-20-04
JAMES K. SHARP	
AD24 OPERATIONS & MAINTENANCE GROUP	
CONCURRENCE:	DATE: 02-20-04
SCOTT PINKSTON	
AD60 ENVIRONMENTAL HEALTH	
CONCURRENCE:	DATE: 02-24-04
DENNIS S. DAVIS	
OD50 SAFETY OFFICE	
CONCURRENCE:	DATE: 02-20-04
CHARLES B. WINKLER	
AD32 COMMUNICATIONS OFFICE	

TELECOMMUNICATIONS EQUIPMENT AFFECTED BY THIS CONTRACT WORK IS NOT TO BE ALTERED OR REMOVED BY THE CONTRACTOR. CONTACT THE COTR IN THE EVENT OF A CONFLICT

REF. NO. S-7 OF 9

REV.	BY	DATE	REVISION	C.I. NO.	APPROVED
1	RTS	12-12-05	AS-BUILT	477159	JC 12-12-05

Marshall Space Flight Center
Huntsville, Alabama 35812

WORK REQUEST NO. 477159

BUILDING 4619

TENSILE TEST LAB BUILDING ADDITION

STANDING SEAM ROOF PLAN & TYPICAL DETAILS

AE FIRM: AJT & ASSOCIATES, INC. HUNTSVILLE - ALABAMA

NASA AE CONTRACT NO. NAS8-00144

SUBMITTED:	APPROVAL RECOMMENDED:	APPROVED:
DAVID A. SELLERS	DAVID L. MARTIN	R. B. FELDER
AE: DATE: 01-21-04	AD22 PROJ. A/E DATE: 02-23-04	AD22 GROUP LEAD DATE: 02-26-04
DESIGNED: D. ANDERSON	APPROVAL RECOMMENDED: ROBERT S. TALIANKO AJT & ASSOCIATES, INC.	DRAWING NO. FAC-FF-4619-S7
DRAWN: D. ANDERSON	AD22 TEAM LEAD DATE: 02-26-04	
CHECKED: D. ANDERSON		
SCALE: AS NOTED	SPEC. NO. TSRC-5	SHEET 15 OF 27

MSFC-FORM 232 REV. 8-21-89-PCL

MSFC MASTER BID DISK 11-18-2013

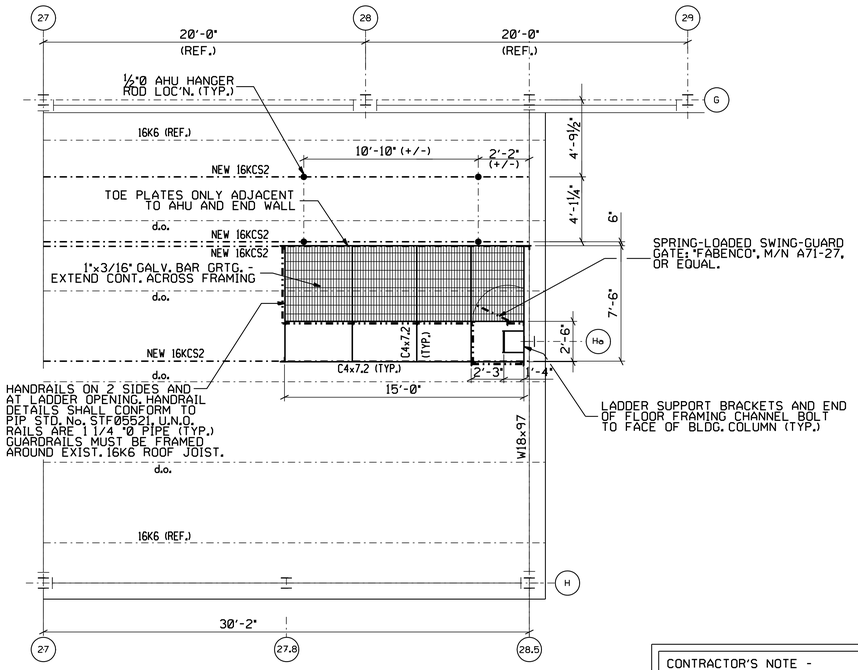

AHU ACCESS PLATFORM FRAMING PLAN

SCALE: ¼" = 1'-0" (0, 2', 4', 6')

(16K6 ROOF JOISTS SHOWN FOR REFERENCE ONLY - COORD. LOC'NS. w./ MECH. CONTRACTOR)

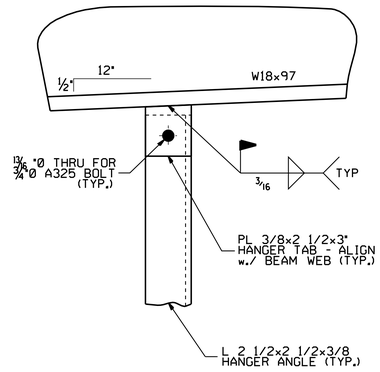

PLATFORM HANGER ANGLE DETAIL AT W18 BEAM

SCALE: 1½" = 1'-0" (0, 6", 1')

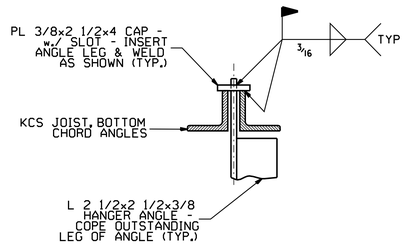

PLATFORM HANGER ANGLE TYP. DETAIL AT JOIST

SCALE: 1½" = 1'-0" (0, 6", 1')

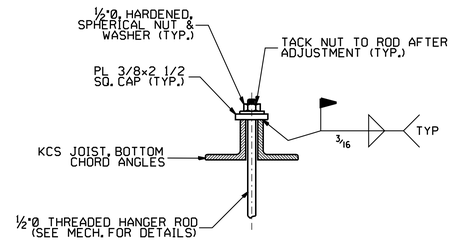

AHU HANGER ROD TYP. DETAIL AT JOIST

SCALE: 1½" = 1'-0" (0, 6", 1')

CONTRACTOR'S NOTE -

STRUCTURAL FABRICATOR AND ERECTOR SHALL COORDINATE WITH THE MECHANICAL CONTRACTOR THE FINAL LOCATIONS OF ALL AHU AND PLATFORM HANGERS, AND THEIR SUPPORTING JOISTS.

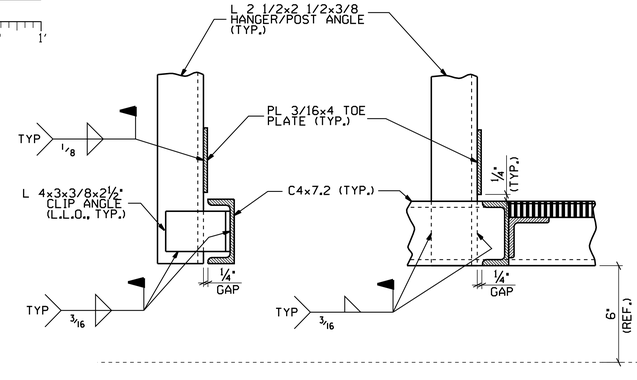

AHU PLATFORM & GRATING TYPICAL POST DETAILS

SCALE: 1½" = 1'-0" (0, 6", 1')

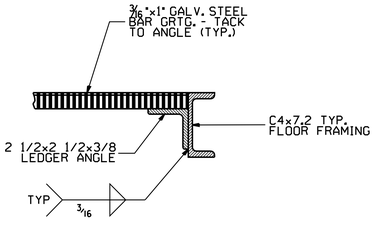

AHU PLATFORM & GRATING TYP. FLOOR RAIL DETAIL

SCALE: 1½" = 1'-0" (0, 6", 1')

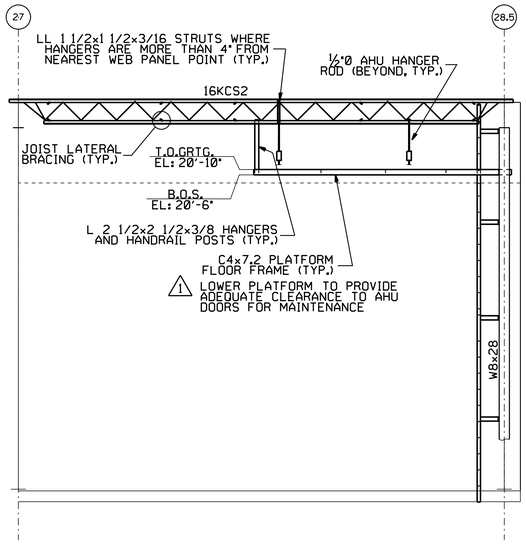

AHU ACCESS PLATFORM SIDE ELEVATION

SCALE: ¼" = 1'-0" (0, 2', 4', 6')

(HANDRAILS NOT SHOWN FOR CLARITY)

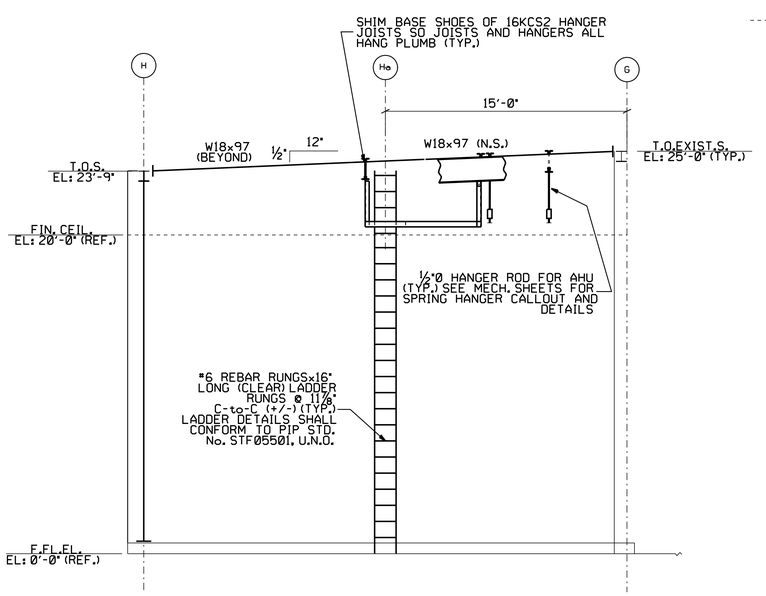

AHU ACCESS PLATFORM END ELEVATION

SCALE: ¼" = 1'-0" (0, 2', 4', 6')

(WIND COLUMN & HANDRAILS NOT SHOWN FOR CLARITY)
(16K6 ROOF JOISTS NOT SHOWN FOR CLARITY)

REDUCED SIZE DRAWING

DO NOT SCALE

CADD DRAWING

CHANGES TO THIS DRAWING SHALL BE MADE ON CADD ONLY.

477159 08-18-03 DWA

LATEST CADD UPDATE: 05-03-07 09:00 AM

BY: B. THOMPSON

REV.	BY	DATE	REVISION	C.I. NO.	APPROVED
1	RTS	02-07-06	AS-BUILT PER RED-LINED DRAWINGS		

CONCURRENCE: AD21 PLANNING OFFICE — DATE:

CONCURRENCE: AD22 PROJECT MANAGER — DATE:

CONCURRENCE: JOE P. EDMONDSON, AD80 ENVIRONMENTAL ENGINEERING DEPT — DATE: 02-24-04

CONCURRENCE: USING OFFICE — DATE:

CONCURRENCE: JAMES K. SHARP, AD24 OPERATIONS & MAINTENANCE GROUP — DATE: 02-20-04

CONCURRENCE: SCOTT PINKSTON, AD60 ENVIRONMENTAL HEALTH — DATE: 02-20-04

CONCURRENCE: DENNIS S. DAVIS, OD50 SAFETY OFFICE — DATE: 02-24-04

CONCURRENCE: CHARLES B. WINKLER, AD32 COMMUNICATIONS OFFICE — DATE: 02-20-04

TELECOMMUNICATIONS EQUIPMENT AFFECTED BY THIS CONTRACT WORK IS NOT TO BE ALTERED OR REMOVED BY THE CONTRACTOR. CONTACT THE COTR IN THE EVENT OF A CONFLICT

REF. NO. S-8 OF 9

Marshall Space Flight Center
Huntsville, Alabama 35812

WORK REQUEST NO. 477159

BUILDING 4619

TENSILE TEST LAB BUILDING ADDITION

HVAC PLATFORM DETAILS

AE FIRM: AJT & ASSOCIATES, INC. HUNTSVILLE - ALABAMA		NASA AE CONTRACT NO. NAS8-00144
SUBMITTED: DAVID A. SELLERS	APPROVAL RECOMMENDED: DAVID L. MARTIN	APPROVED: R. B. FELDER
AE: DATE: 01-21-04	AD22 PROJ. A/E: DATE: 02-23-04	AD22 GROUP LEAD: DATE: 02-26-04
DESIGNED: D. ANDERSON	APPROVAL RECOMMENDED: ROBERT S. TALIANKO, AJT & ASSOCIATES, INC.	DRAWING NO. FAC-FF-4619-S8
DRAWN: D. ANDERSON		
CHECKED: D. ANDERSON	AD22 TEAM LEAD: DATE: 02-26-04	
SCALE: AS NOTED	SPEC. NO. TSRC-5	SHEET 16 OF 27

MSFC-FORM 232 REV. 8-21-89-RCL

MSFC MASTER BID DISK 11-18-2013

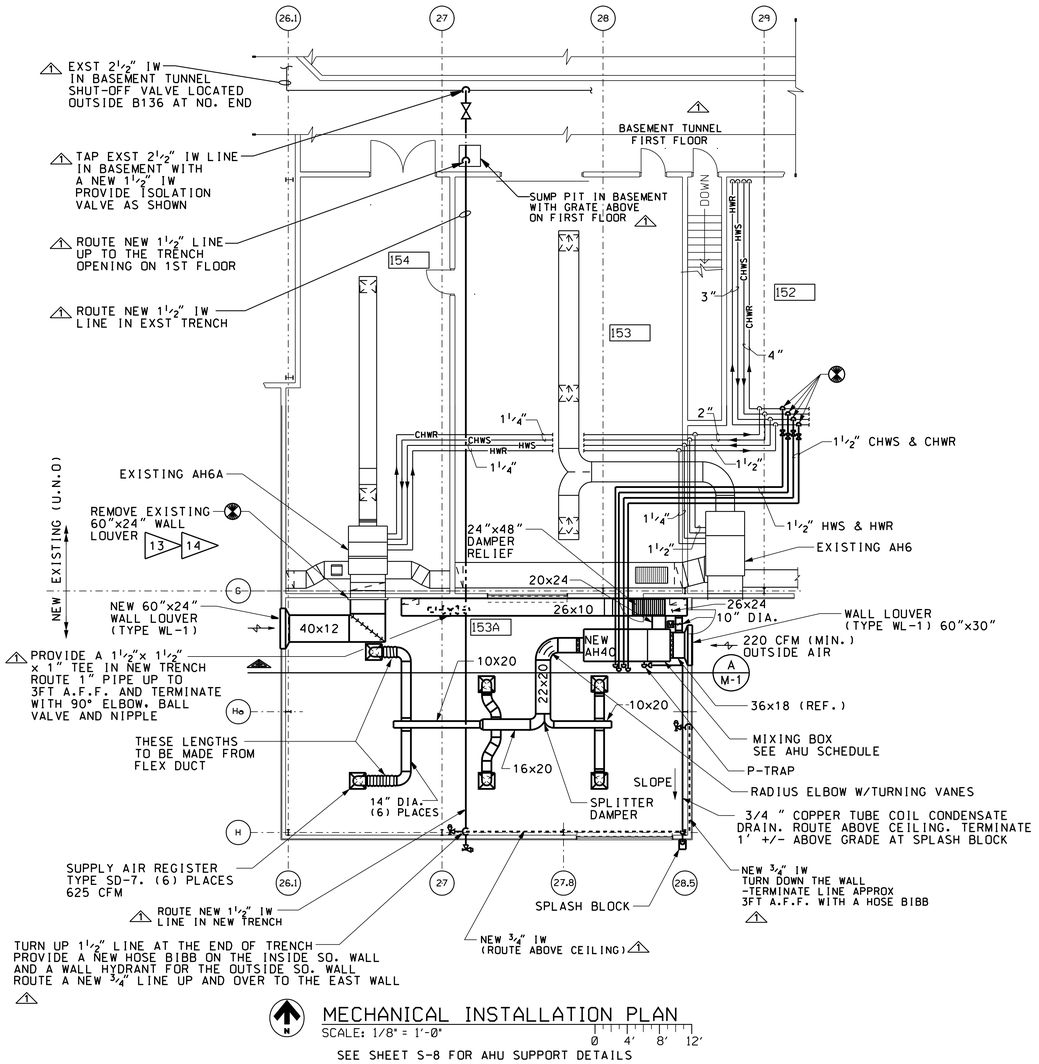

MECHANICAL INSTALLATION PLAN

SCALE: 1/8" = 1'-0"

0 4' 8' 12'

SEE SHEET S-8 FOR AHU SUPPORT DETAILS

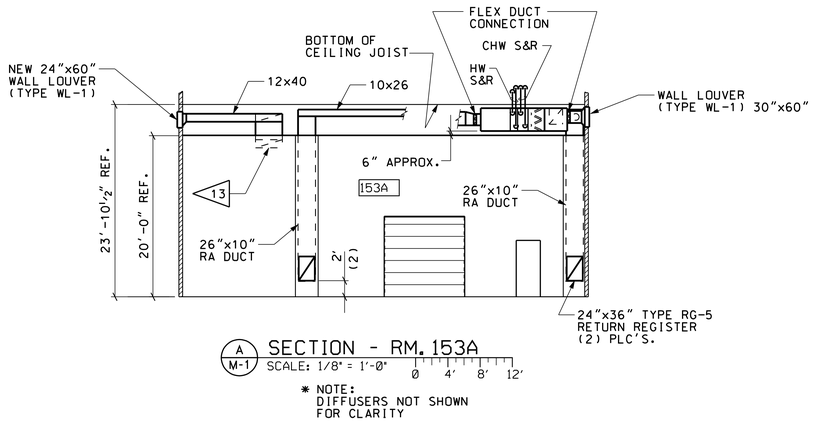

A / M-1 SECTION - RM. 153A

SCALE: 1/8" = 1'-0"

0 4' 8' 12'

* NOTE: DIFFUSERS NOT SHOWN FOR CLARITY

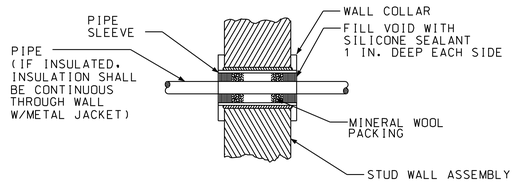

TYPICAL WALL PENETRATION DETAIL

N.T.S.

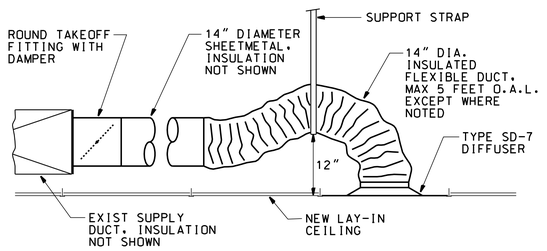

2 / M2 BRANCH DUCT/DIFFUSER DETAIL

NOT TO SCALE

LEGEND	
———	NEW EQUIPMENT OR PIPING
———	EXISTING EQUIPMENT OR PIPING
⊠	SUPPLY REGISTER
▨	RETURN REGISTER (OR DUCT SECTION)
⊗	CONNECTION TO EXISTING
⋈	GATE VALVE (TYPE GTV-1)
→→→→	TURNING VANES
CHWS	CHILLED WATER SUPPLY
CHWR	CHILLED WATER RETURN
HWS	HEATING HOT WATER SUPPLY
HWR	HEATING HOT WATER RETURN

MECHANICAL CONSTRUCTION NOTES

1. ALL ITEMS ARE SPECIFIED ON AN "OR APPROVED EQUAL" BASIS. EQUIPMENT TYPE NUMBERS REFER TO THOSE DEFINED IN SPECIFICATION TSRC-5 AND CONTRACT DRAWINGS. PROVIDE SUBMITTALS FOR APPROVAL PER SPEC SECTION 01330 AND THE SCHEDULE OF SUBMITTALS. AT THE ENGINEER'S DISCRETION, SUBMITTALS MAY BE WAIVED FOR SPECIFIC ITEMS IF THE SPECIFIED EQUIPMENT MAKE AND MODEL NUMBERS ARE TO BE PROVIDED. WAIVERS MUST BE REQUESTED IN WRITING
2. VERIFY ALL FIELD CONDITIONS, ELEVATIONS, AND DIMENSIONS BEFORE BEGINNING FABRICATION AND INSTALLATION.
3. MATERIAL AND EQUIPMENT REMOVED AND NOT REUSED SHALL BE DISPOSED OF AS DIRECTED BY THE CONTRACTING OFFICER'S TECHNICAL REPRESENTATIVE (COTR).
4. EXERCISE CARE DURING THE WORK TO PREVENT DAMAGE TO EXISTING FINISHES, EQUIPMENT, AND FURNISHINGS.
5. EXISTING CORRUGATED PANELS ON WALLS AND ROOF CONTAIN ASBESTOS. FOLLOW PROCEDURES PRESCRIBED IN SPEC SECTION 01355, "ASBESTOS PROCEDURES". PANELS SHALL NOT BE CUT OR DRILLED.
6. CLEAN HYDRONIC PIPING IN ACCORDANCE WITH SPECIFICATION PROCEDURES IN SECTION 15215 FOR CLASS IV CLEANLINESS LEVEL.
7. HYDROSTATICALLY TEST HYDRONIC AND COIL CONDENSATE PIPING IN ACCORDANCE WITH SPECIFICATION 15180. SUBMIT TEST REPORTS.
8. INSULATE DUCTWORK WITH EXTERNAL DUCT WRAP INSULATION. INSULATE ALL HYDRONIC PIPING WITH CLOSED CELL FOAM INSULATION. ALL INSULATION WORK SHALL BE IN ACCORDANCE WITH SPECIFICATION SECTION 15080. RETURN AIR DUCT BELOW CEILING IN ROOM 153A DOES NOT REQUIRE INSULATION.
9. LABEL PIPING AND EQUIPMENT PER SPEC SECTION 15075.
10. ALL TEST AND BALANCE WORK SHALL BE PERFORMED BY AN INDEPENDENT FIRM SPECIALIZING IN TESTING, ADJUSTING, AND BALANCING WORK AND CERTIFIED BY AABC OR NEBB PER SPEC SECTION 15950, PARA. 1.03.
11. SUBMIT CALIBRATION DATES OF TEST AND BALANCE INSTRUMENTS FOR APPROVAL BEFORE TEST AND BALANCE WORK. SUBMIT FINAL TEST AND BALANCE REPORT PER SPEC SECTION 15950.
12. WARNING: DEVICES USING 24 VAC AS A POWER SOURCE MUST BE CORRECTLY POLARIZED WITH RESPECT TO UCS CONTROL EQUIPMENT. PRIOR TO APPLYING POWER, CONTACT UCS FOR SPECIFIC WIRING INFORMATION.
13. EXTEND OUTSIDE AIR DUCT FROM AH6A UPWARD AS REQUIRED TO REROUTE ABOVE CEILING OF ROOM 153A TO THE WEST WALL. DISPOSE OF EXISTING LOUVER SET.
14. PROVIDE SHEET METAL FLASHING AROUND DUCT PENETRATION ON BOTH SIDES OF THE WALL.
15. PROVIDE SPRING TYPE ISOLATORS FOR NEW AH40. SEE SHEET S-8 FOR AHU SUPPORT DETAILS.

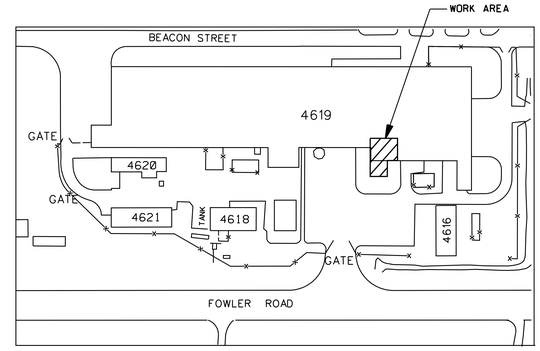

KEY PLAN

NOT TO SCALE

REDUCED SIZE DRAWING

DO NOT SCALE

CADD DRAWING

CHANGES TO THIS DRAWING SHALL BE MADE ON CADD ONLY.

477159 12-15-03 GAB

LATEST CADD UPDATE: 11-02-05 03:00 PM

BY: SAMANIEGO

REV.	BY	DATE	REVISION	C.I. NO.	APPROVED
1	RTS	11-02-05	AS-BUILT PER RED LINED DRAWING	477159	JC 11-02-05

CONCURRENCE: AD21 PLANNING OFFICE — DATE:

CONCURRENCE: AD22 PROJECT MANAGER — DATE:

CONCURRENCE: JOE P. EDMONDSON, AD10 ENVIRONMENTAL ENGINEERING DEPT — DATE: 02-24-04

CONCURRENCE: USING OFFICE — DATE:

CONCURRENCE: JAMES K. SHARP, AD24 OPERATIONS & MAINTENANCE GROUP — DATE: 02-20-04

CONCURRENCE: SCOTT PINKSTON, AD60 ENVIRONMENTAL HEALTH — DATE: 02-20-04

CONCURRENCE: DENNIS S. DAVIS, OD50 SAFETY OFFICE — DATE: 02-24-04

CONCURRENCE: CHARLES B. WINKLER, AD32 COMMUNICATIONS OFFICE — DATE: 02-20-04

TELECOMMUNICATIONS EQUIPMENT AFFECTED BY THIS CONTRACT WORK IS NOT TO BE ALTERED OR REMOVED BY THE CONTRACTOR. CONTACT THE COTR IN THE EVENT OF A CONFLICT

Marshall Space Flight Center
Huntsville, Alabama 35812

WORK REQUEST NO. 477159

BUILDING 4619

TENSILE TEST LAB BUILDING ADDITION

MECHANICAL PLAN, DETAILS, & NOTES

AE FIRM: AJT & ASSOCIATES, INC. HUNTSVILLE - ALABAMA

NASA AE CONTRACT NO. NAS8-00144

SUBMITTED: DAVID A. SELLERS		APPROVAL RECOMMENDED: DAVID L. MARTIN	APPROVED: R. B. FELDER
AE:	DATE: 01-21-04	AD22 PROJ. A/E	DATE: 02-23-04	AD22 GROUP LEAD	DATE: 02-26-04
DESIGNED: A.K. CAMPBELL		APPROVAL RECOMMENDED: ROBERT S. TALIANKO, AJT & ASSOCIATES, INC.		DRAWING NO. FAC-FF-4619-M1
DRAWN: G. BATCHELOR				
CHECKED: G. WELZYN		AD22 TEAM LEAD	DATE: 02-26-04	
SCALE: AS NOTED		SPEC. NO. TSRC-5		SHEET 17 OF 27

REF. NO. M-1 OF 2

MSFC-FORM 232 REV. 8-21-89-PCL

MSFC MASTER BID DISK 11-18-2013

MODULAR AIR HANDLING UNIT SCHEDULE	
MARK	AH40
TOTAL AIRFLOW, CFM	3750
MIN OUTDOOR AIRFLOW, CFM	220
MODULE 1 - AIR MIXING MODULE	
MODULE TYPE	WITHOUT FILTERS
INLET OPENINGS (WITH DAMPERS)	LEFT AND REAR
OUTLET OPENING	FRONT
MODULE 2 - FILTER MODULE	(NOTES 2 & 5)
MODULE TYPE	ANGLED
FILTER TYPE	2 INCH THROWAWAY
MODULE 3 - CHW COOLING COIL	(NOTES 3 & 6)
CONFIGURATION	HORIZONTAL
ENTERING AIR DB/WB, F	76.6/65.5
LEAVING AIR DB/WB, F	63.4/60.5
SENSIBLE/TOTAL COOLING MBH	54.6/60.8
AIRSIDE PRESSURE DROP, IN. W.G.	0.3
ENTERING /LEAVING WATER TEMP., F	43/56
CHW FLOW, GPM	9.4
WATER PRESSURE DROP, FT. W.G.	10
MODULE 4 - HW HEATING COIL	(NOTES 3 & 6)
CONFIGURATION	HORIZONTAL
ENTERING AIR DB, F	65.4
LEAVING AIR DB, F	95
HEATING MBH	120.3
AIRSIDE PRESSURE DROP, IN. W.G.	0.1
ENTERING /LEAVING WATER TEMP., F	180/160
HW FLOW, GPM	12
WATER PRESSURE DROP, FT. W.G.	1

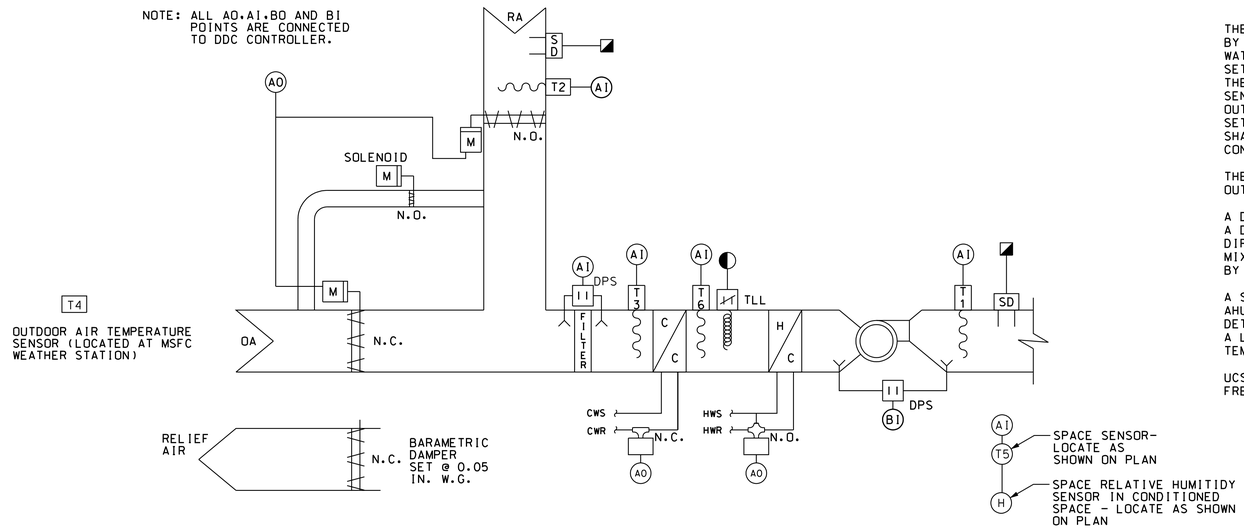

CONSTANT VOLUME AIR HANDLING UNIT WITH ECONOMIZER CONTROL SCHEMATIC

N.T.S.

MODULE 5 - SUPPLY FAN	(NOTES 4 & 8)
CONFIGURATION	HORIZONTAL
DISCHARGE POSITION	FRONT TOP
AIRFLOW, CFM (NOTE 7)	3,750
EXT/TOTAL STATIC PRESS., IN. W.G.	0.5 / 2.44
FAN DRIVE/MOTOR HORSEPOWER	3.0
UNIT DATA	
CASING CONSTRUCTION TYPE	DOUBLE WALL
ELECTRICAL (VOLTS/Ph/Hz)	460/3/60
ACCESSORIES/NOTES	(NOTES 1 & 9)
MANUFACTURER	TRANE
MODEL	CLIMATE CHANGER, SIZE 08

NOTES:

1. BASE RAIL
2. RIGHT HAND ACCESS DOORS
3. RIGHT HAND COIL CONNECTIONS
4. EXTENDED GREASE LINES
5. AT MIDLIFE FILTER PRESSURE DROP
6. COIL TUBING WALL: .025" FOR 1/2" O.D., .035" FOR 5/8" O.D.
7. AT 600 FT ELEVATION
8. PERFORATED LINER (FAN ONLY)
9. COMBINATION STARTER/DISCONNECT
10. ADJUSTABLE FAN AND MOTOR SHEAVES

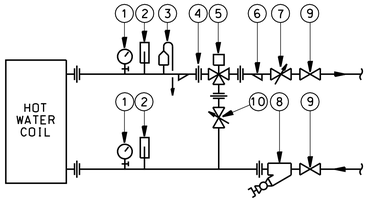

1. TYPE PG-3 PRESSURE GAUGE PER SECTION 15125 WITH WEKSLER TYPE BBV4 NEEDLE VALVE.
2. LIQUID FILLED THERMOMETER WITH WELL PER SECTION 15125.
3. AUTOMATIC AIR VENT PER SECTION 15180 WITH 3/8" COPPER TUBING TO DRAIN.
4. UNION, MALLEABLE IRON OR CAST COPPER, TYPICAL.
5. MODULATING 3-WAY GLOBE VALVE WITH ELECTRONIC ACTUATOR, SEE CONTROL VALVE SCHEDULE (THIS SHEET).
6. ECCENTRIC REDUCER, NPT CONNECTIONS, FLAT ON TOP.
7. AUTOMATIC BALANCING VALVE PER SECTION 15180.
8. STRAINER PER SECTION 15180 AND TYPE BLV-2 BALL VALVE PER SECTION 15110. PROVIDE HOSE THREAD CONNECTION.
9. GATE VALVE, TYPE PER SECTION 15110, TABLE 2.02, A.
10. MANUAL BALANCING VALVE PER SECTION 15180. BALANCE FOR PRESSURE DROP EQUAL TO COIL PRESSURE DROP.

HOT WATER COIL DETAIL

NOT TO SCALE

SEQUENCE OF OPERATION

THE AIR HANDLING UNIT WILL BE REMOTELY STARTED, STOPPED, AND CONTROLLED BY THE UCS SYSTEM. THE SYSTEM DDC CONTROLLER WILL MODULATE CHILLED WATER AND HOT WATER VALVES IN SEQUENCE TO MAINTAIN A SPACE TEMPERATURE SETPOINT OF 75 DEG F +/- 2 DEG F AS SENSED BY SPACE SENSOR T5. WHEN THE OUTDOOR TEMPERATURE DROPS BELOW 55 DEG F, AS SENSED BY TEMPERATURE SENSOR T4, THE SYSTEM CONTROLLER WILL MODULATE THE RETURN AIR AND OUTSIDE AIR MOTORIZED DAMPERS TO MAINTAIN THE SPACE TEMPERATURE SETPOINT IN THE ECONOMIZER MODE. THE RELIEF AIR (BAROMETRIC) DAMPER SHALL BE SET TO MAINTAIN A SPACE PRESSURE OF 0.05 IN. W.G. IN THE CONDITIONED SPACE.

THE MINIMUM OUTSIDE AIR DAMPER WILL BE SET TO MAINTAIN THE MINIMUM OUTSIDE AIRFLOW CFM.

A DIFFERENTIAL PRESSURE SWITCH WILL MONITOR THE SUPPLY AIR FAN STATUS. A DIFFERENTIAL PRESSURE SWITCH WILL PROVIDE A REMOTE ALARM WHEN FILTER DIFFERENTIAL PRESSURE OF 0.6 IN. W.G. IS EXCEEDED. RETURN AIR AND MIXED AIR TEMPERATURES WILL BE TRANSMITTED TO THE SYSTEM CONTROLLER BY TEMPERATURE SENSORS T2 AND T3 RESPECTIVELY AND WILL BE DISPLAYABLE.

A SMOKE DETECTOR IN THE SUPPLY AND RETURN DUCTS WILL SHUTDOWN THE AHU IF PRODUCTS OF COMBUSTION ARE DETECTED. DUCT MOUNTED SMOKE DETECTORS WILL BE INTERCONNECTED WITH BUILDING FIRE ALARM SYSTEM. A LOW LIMIT THERMOSTAT WILL SHUT DOWN THE AHU IF MIXED AIR TEMPERATURE DROPS BELOW 40 DEG F.

UCS SHALL MODULATE THE CHILLED WATER VALVE AS NEEDED TO PREVENT FREEZING WHEN THE OUTSIDE AIR TEMPERATURE DROPS BELOW 35 DEGREES F.

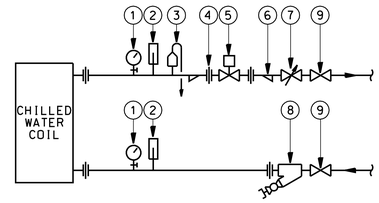

1. TYPE PG-3 PRESSURE GAUGE PER SECTION 15125 WITH WEKSLER TYPE BBV4 NEEDLE VALVE.
2. LIQUID FILLED THERMOMETER WITH WELL PER SECTION 15125.
3. AUTOMATIC AIR VENT PER SECTION 15180 WITH 3/8" COPPER TUBING TO DRAIN.
4. UNION, MALLEABLE IRON OR CAST COPPER, TYPICAL.
5. MODULATING 2-WAY GLOBE VALVE WITH ELECTRONIC ACTUATOR, SEE CONTROL VALVE SCHEDULE.
6. ECCENTRIC REDUCER, NPT CONNECTIONS, FLAT ON TOP.
7. AUTOMATIC BALANCING VALVE PER SECTION 15180.
8. STRAINER PER SECTION 15180 AND TYPE BLV-2 BALL VALVE PER SECTION 15110. PROVIDE HOSE THREAD CONNECTION.
9. GATE VALVE, TYPE PER SECTION 15110, TABLE 2.02, A.

CHILLED WATER COIL DETAIL

NOT TO SCALE

REDUCED SIZE DRAWING

DO NOT SCALE

CADD DRAWING

CHANGES TO THIS DRAWING SHALL BE MADE ON CADD ONLY.

477159 12-29-03 GAB

LATEST CADD UPDATE: 11-03-05 12:15 PM BY: SAMANIEGO

CONCURRENCE: DATE:
AD21 PLANNING OFFICE

CONCURRENCE: DATE:
AD22 PROJECT MANAGER

CONCURRENCE: DATE: 02-24-04
JOE P. EDMONDSON
AD10 ENVIRONMENTAL ENGINEERING DEPT

CONCURRENCE: DATE:
USING OFFICE

CONCURRENCE: DATE: 02-20-04
JAMES K. SHARP
AD24 OPERATIONS & MAINTENANCE GROUP

CONCURRENCE: DATE: 02-20-04
SCOTT PINKSTON
AD60 ENVIRONMENTAL HEALTH

CONCURRENCE: DATE: 02-24-04
DENNIS S. DAVIS
QD50 SAFETY OFFICE

CONCURRENCE: DATE: 02-20-04
CHARLES B. WINKLER
AD32 COMMUNICATIONS OFFICE
TELECOMMUNICATIONS EQUIPMENT AFFECTED BY THIS CONTRACT WORK IS NOT TO BE ALTERED OR REMOVED BY THE CONTRACTOR. CONTACT THE COTR IN THE EVENT OF A CONFLICT

REF. NO. M-2 OF 2

REV.	BY	DATE	REVISION	C.I. NO.	APPROVED
1	RTS	11-03-05	AS-BUILT	477159	JC 11-03-05

Marshall Space Flight Center
Huntsville, Alabama 35812

WORK REQUEST NO. 477159

BUILDING 4619

TENSILE TEST LAB BUILDING ADDITION

MECHANICAL DETAILS, AHU SCHEDULES, SEQUENCE OF OPERATION

AE FIRM: AJT & ASSOCIATES, INC. HUNTSVILLE - ALABAMA		NASA AE CONTRACT NO. NAS8-00144
SUBMITTED: DAVID A. SELLERS	APPROVAL RECOMMENDED: DAVID L. MARTIN	APPROVED: R. B. FELDER
AE: DATE: 01-21-04	AD22 PROJ. A/E DATE: 02-23-04	AD22 GROUP LEAD DATE: 02-26-04
DESIGNED: A.K. CAMPBELL	APPROVAL RECOMMENDED: ROBERT S. TALIANKO AJT & ASSOCIATES, INC.	DRAWING NO. FAC-FF-4619-M2
DRAWN: G. BATCHELOR	AD22 TEAM LEAD DATE: 02-26-04	
CHECKED: G. WELZYN	SPEC. NO. TSRC-5	SHEET 18 OF 27
SCALE: AS NOTED		

MSFC-FORM 232 REV. 8-21-89-RCL

MSFC MASTER BID DISK 11-18-2013

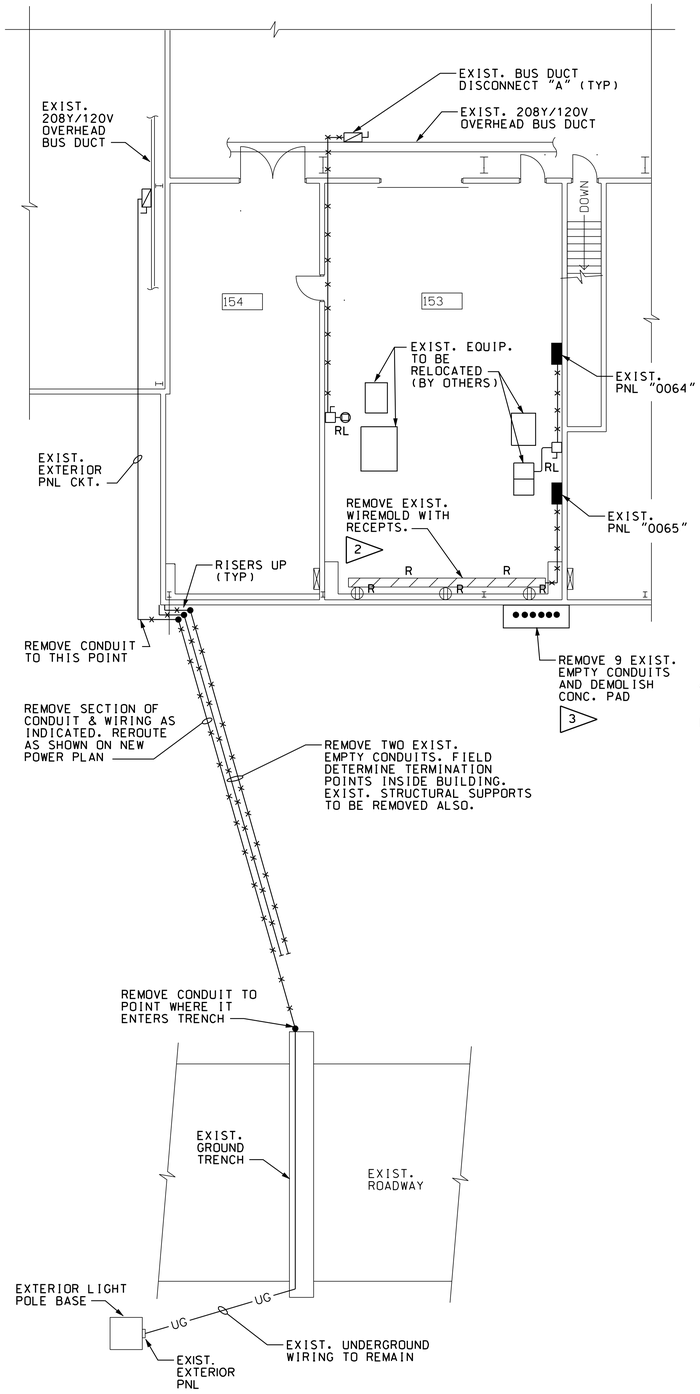

BUILDING 4619 REMOVAL PLAN

SCALE: 1/8" = 1'-0" 0 4' 8' 12'

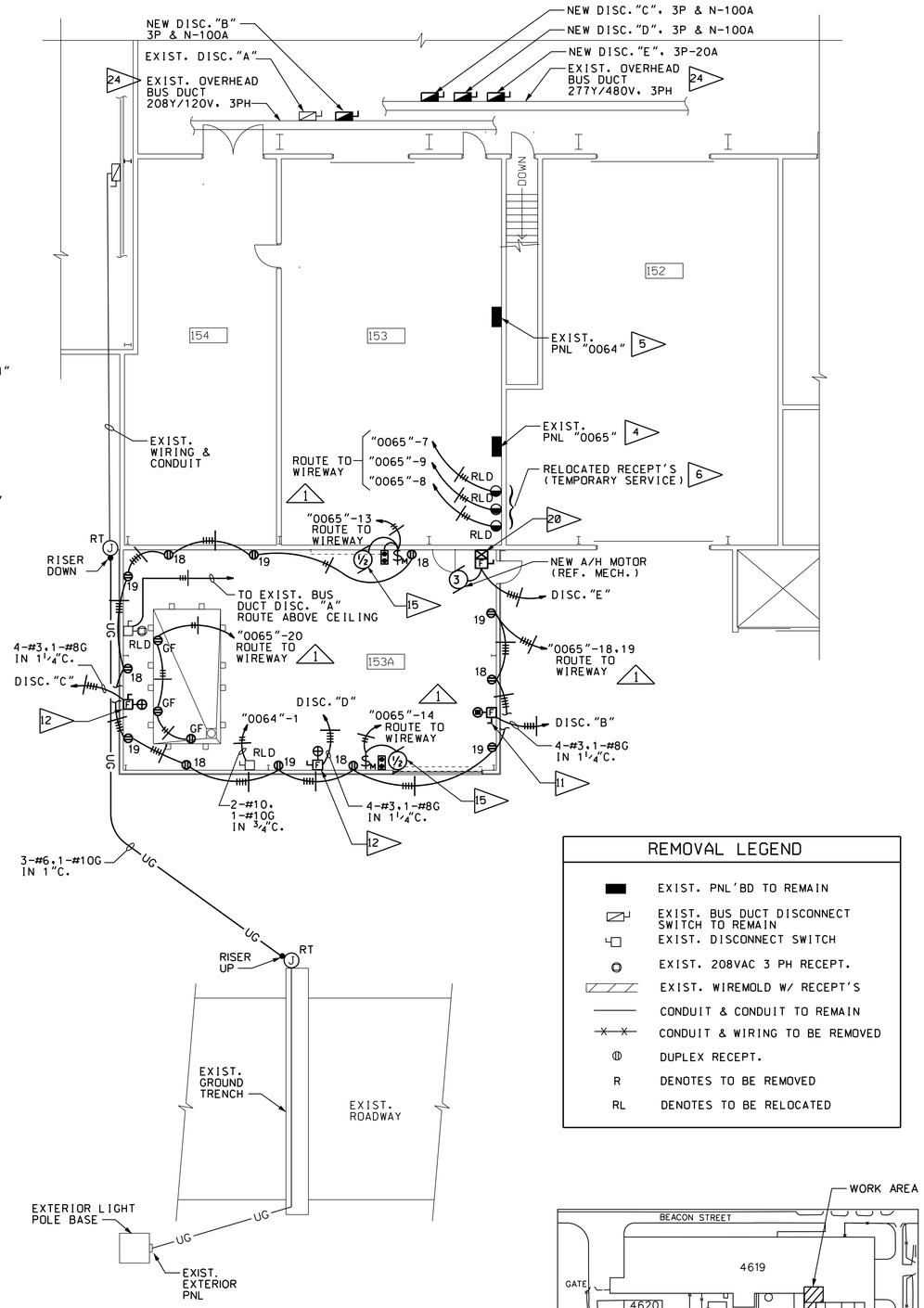

BUILDING 4619 POWER PLAN

SCALE: 1/8" = 1'-0" 0 4' 8' 12'

REMOVAL LEGEND

■	EXIST. PNL'BD TO REMAIN
	EXIST. BUS DUCT DISCONNECT SWITCH TO REMAIN
	EXIST. DISCONNECT SWITCH
	EXIST. 208VAC 3 PH RECEPT.
	EXIST. WIREMOLD W/ RECEPT'S
	CONDUIT & CONDUIT TO REMAIN
	CONDUIT & WIRING TO BE REMOVED
	DUPLEX RECEPT.
R	DENOTES TO BE REMOVED
RL	DENOTES TO BE RELOCATED

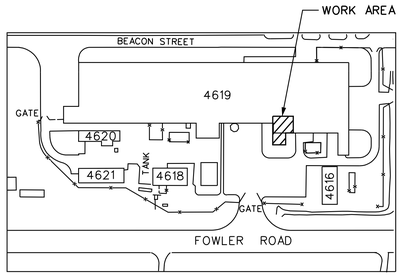

KEY PLAN
NOT TO SCALE

REMOVAL NOTES: (THIS SHEET)

1. REMOVE DEVICES AS INDICATED ON REMOVAL PLAN AND LEGEND.
2. RELOCATE THREE (3) RECEPTACLES FROM WIREMOLD TO S.E. WALL, RM. 153 FOR TEMPORARY SERVICE TO EQUIP. INSTALL IN FD BOXES. COORDINATE WITH USER, MR. ROBERT BOBO, TELEPHONE NO. 544-5535.
3. REMOVE EXISTING CONCRETE PAD ALONG WITH ALL ABANDONED EMPTY IN-GROUND CONDUITS. A TOTAL OF NINE EXIST. FOUR ENTERS BASEMENT. CAP THESE FOUR FLUSH WITH OUTSIDE BASEMENT WALL. (REF. DWG. F&D-V-4619-E1 FOR ORIGINAL INSTALLATION). REPAIR ANY DAMAGE DONE TO BASEMENT WALL WATER PROOF COATING.

ELECTRICAL NOTES: (NEW INSTALLATION)

1. ALL ELECTRICAL WORK SHALL CONFORM TO THE 2002 N.E.C. AND TSRC-5 SPECIFICATIONS AS MINIMUM STANDARDS. NEW WIRING SHALL BE #12THHN IN ¾ INCH CONDUIT, UNLESS OTHERWISE SPECIFIED. CONDUIT INSIDE BUILDING MAY BE E.M.T.; OUTSIDE BUILDING AND INSIDE EQUIP. PIT SHALL BE GALVANIZED RIGID STEEL.
2. UNDERGROUND CONDUIT SHALL BE BURIED 18 INCHES DEEP, MINIMUM, AND SHALL BE COATED WITH TWO COATS OF AN APPROVED ASPHALTUM COMPOUND.
3. ALL ITEMS SPECIFIED ARE ON AN "OR APPROVED EQUAL" BASIS. PROVIDE SUBMITTALS FOR APPROVAL PER SECTION 1330 AND THE SCHEDULE OF SUBMITTALS, AT THE ENGINEER'S DISCRETION. SUBMITTALS MAY BE WAIVED FOR SPECIFIC ITEMS IF THE SPECIFIED EQUIPMENT MAKE AND MODEL NUMBER ARE PROVIDED. WAIVERS MUST BE REQUESTED IN WRITING.
4. EXISTING PANEL "0065" IS 208Y/120VAC, 3 PH, 4W, 100A, SQUARE-D TYPE 00. INSTALL TWO NEW 2P-15A BREAKERS IN EMPTY POSITIONS 13 & 14. INSTALL 1P-20A BREAKERS IN EMPTY POSITIONS 17 THRU 22. UPDATE PANEL DIRECTORY TO REFLECT NEW CIRCUITS PER THIS DESIGN.
5. IN PANEL "0064" REPLACE TWO 1P-20A SPARE BREAKERS IN POSITIONS 1 & 3 WITH ONE 2P-30A. UPDATE PANEL DIRECTORY TO REFLECT NEW CIRCUITS PER THIS DESIGN.
6. RELOCATED RECEPTACLES ARE FROM WIREMOLD REMOVED FROM SOUTH WALL, ROOM 153. MOUNT ON WALL IN FD BOXES 12 INCHES A.F.F. LABEL "TEMPORARY SERVICE ONLY".
7. NEW 120VAC, 20A, NEMA 5-20R DUPLEX RECEPTACLE, HUBBELL NO. 5362. "GF" INDICATES THOSE TO BE GFCI TYPE. FLUSH MOUNT IN NEW WALLS 12 INCHES A.F.F., EXCEPT SURFACE MOUNT IN PIT, 36" A.F.F..
8. NEW 2' X 4' FLUORESCENT LIGHT FIXTURE, FLUSH MOUNTING, WITH FOUR T8 LAMPS, AND 277VAC ELECTRONIC BALLAST, LESS THAN 10% THD, LITHONIA CATALOG NO. 2SP8-G-4-32-A12-277-1/4-GEB10IS. FIXTURES DENOTED WITH "EM" SHALL HAVE EMERGENCY BATTERY PACK.
9. NEW LIGHT FIXTURE (ROUGH SERVICE) WITH CLEAR PRISMATIC LENS AND 7 WATT FLUORESCENT TWIN-TUBE, 120VAC, LITHONIA CATALOG NO. VR2-7TT-120. MOUNT ON WALL IN PIT 6 INCHES BELOW GRATING.
10. NEW WALL-PAK METAL HALIDE LIGHT FIXTURE, 120VAC, MEDIUM BRONZE IN COLOR, LITHONIA CATALOG NUMBERS AS FOLLOWS:
    A. 70 WATT #TWP 70M-120-DMB. MOUNT ON WALL ABOVE DOOR.
    B. 150 WATT #TWP 150M-120-DMB. MOUNT ON WALL AT 10 FT. ELEVATION ABOVE GRADE.

    PROVIDE PHOTOELECTRIC CONTROL KIT #RK1 PEB1, TO BE INSTALLED AHEAD OF FIRST FIXTURE IN CIRCUIT.
11. NEW HEAVY DUTY SAFETY, 3P & N-240VAC, 100A, FUSIBLE, NEMA 1, SQUARE-D CATALOG NO. H323N. FUSE AT 100A. MOUNT ON WALL AT 60 INCHES A.F.F.
12. NEW HEAVY DUTY SAFETY SWITCH, 3P & N-600VAC, 100A, FUSIBLE, NEMA 1, SQUARE-D CATALOG NO. H363N. FUSE AT 100A. MOUNT ON WALL AT 60 INCHES A.F.F.
13. NEW 208VAC, 4 POLE, 4 WIRE, 60A PIN AND SLEEVE RECEPTACLE, WITH SPRING DOOR, MOUNTED ON AJA BOX, APPLETON CATALOG NO. ADJA6044-125. MOUNT ON WALL 24 INCHES A.F.F. BELOW SAFETY SWITCH. PROVIDE MATING PLUG WITH EACH RECEPTACLE.
14. NEW 480VAC, 4 POLE, 4 WIRE, 100A PIN AND SLEEVE RECEPTACLE, WITH SPRING DOOR, MOUNTED ON AJA BOX, APPLETON CATALOG NO. ADJA1033-125. MOUNT ON WALL 24 INCHES A.F.F. BELOW SAFETY SWITCH. PROVIDE MATING PLUG WITH EACH RECEPTACLE.
15. NEW ROLL-UP DOOR ELECTRIC OPERATOR, 208VAC, 1 PH, 60HZ, WITH ½ HP MOTOR, OVERHEAD DOOR ARMORDRIVE TYPE, WITH PRE-WIRED CONTROLS, LIMIT SWITCH, REMOTE CONTROL STATION, AND MOUNTING KIT. SIZE AND CAPACITY SHALL BE AS RECOMMENDED BY DOOR MANUFACTURER. SEE ARCHITECTURAL FOR DOOR TYPE.
16. PROVIDE MANUAL MOTOR STARTER FOR MOTOR OPERATOR. SQUARE-D CLASS 2510, CATALOG NO. FG1. MOUNT ON WALL 48 INCHES A.F.F.

NOTES CONTINUED ON SHEET E2

REDUCED SIZE DRAWING
DO NOT SCALE

CADD DRAWING
CHANGES TO THIS DRAWING SHALL BE MADE ON CADD ONLY.
477159 12-11-03 RTS
LATEST CADD UPDATE: 11-29-05 10:20 AM
BY: SAMANIEGO

REV.	BY	DATE	REVISION	C.J. NO.	APPROVED
1	RTS	11-29-05	AS-BUILT PER RED LINED DRAWING	477159	JC 11-29-05

CONCURRENCE: AD21 PLANNING OFFICE — DATE:
CONCURRENCE: AD22 PROJECT MANAGER — DATE: 02-24-04
JOE P. EDMONDSON, AD10 ENVIRONMENTAL ENGINEERING DEPT — DATE:
CONCURRENCE: USING OFFICE — DATE:
CONCURRENCE: JAMES K. SHARP, AD24 OPERATIONS & MAINTENANCE GROUP — DATE: 02-20-04
CONCURRENCE: SCOTT PINKSTON, AD60 ENVIRONMENTAL HEALTH — DATE: 02-20-04
CONCURRENCE: DENNIS S. DAVIS, OD50 SAFETY OFFICE — DATE: 02-24-04
CONCURRENCE: CHARLES B. WINKLER, AD32 COMMUNICATIONS OFFICE — DATE: 02-20-04
TELECOMMUNICATIONS EQUIPMENT AFFECTED BY THIS CONTRACT WORK IS NOT TO BE ALTERED OR REMOVED BY THE CONTRACTOR. CONTACT THE COTR IN THE EVENT OF A CONFLICT
REF. NO. E1 OF 3

Marshall Space Flight Center
Huntsville, Alabama 35812

WORK REQUEST NO. 477159

BUILDING 4619
TENSILE TEST LAB BUILDING ADDITION
REMOVAL PLAN AND POWER PLAN

AE FIRM: AJT & ASSOCIATES, INC. HUNTSVILLE - ALABAMA		NASA AE CONTRACT NO. NAS8-00144
SUBMITTED: DAVID A. SELLERS	APPROVAL RECOMMENDED: DAVID L. MARTIN	APPROVED: R. B. FELDER
AE: DATE: 01-21-04	AD22 PROJ. A/E DATE: 02-23-04	AD22 GROUP LEAD DATE: 02-26-04
DESIGNED: J.E. BRANCH	APPROVAL RECOMMENDED: ROBERT S. TALIANKO, AJT & ASSOCIATES, INC.	DRAWING NO. FAC-FF-4619-E1
DRAWN: SAMANIEGO/FLETCHER	AD22 TEAM LEAD DATE: 02-26-04	
CHECKED: M. DEY		SHEET 19 OF 27
SCALE: AS NOTED	SPEC. NO. TSRC-5	

MSFC-FORM 232 REV. 8-21-89-PCL

MSFC MASTER BID DISK 11-18-2013

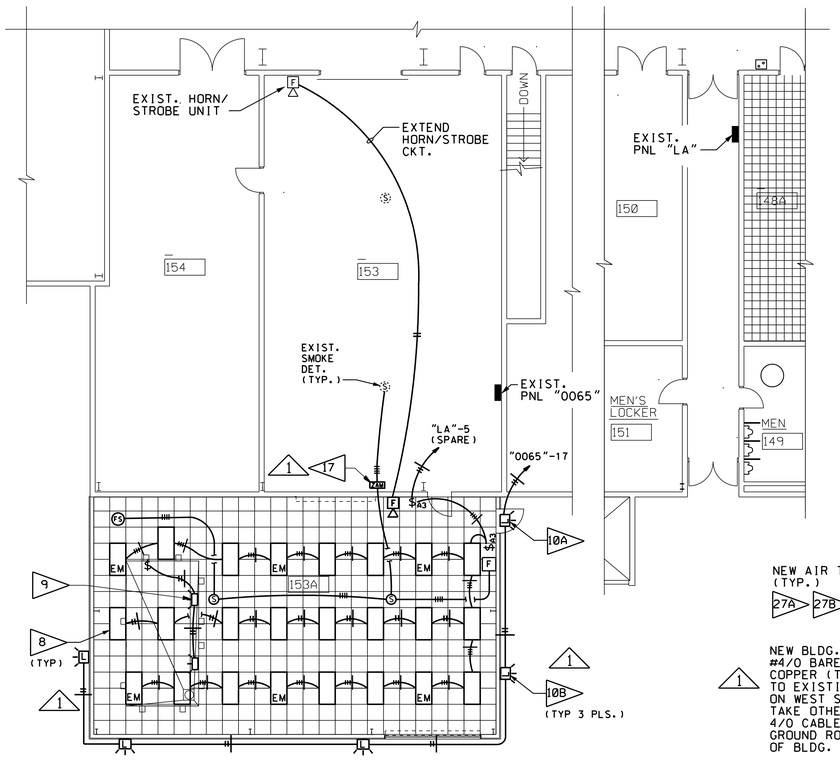

BUILDING 4619
PARTIAL LIGHTING & F.A. PLAN
SCALE: 1/8" = 1'-0"

0 4' 8' 12'

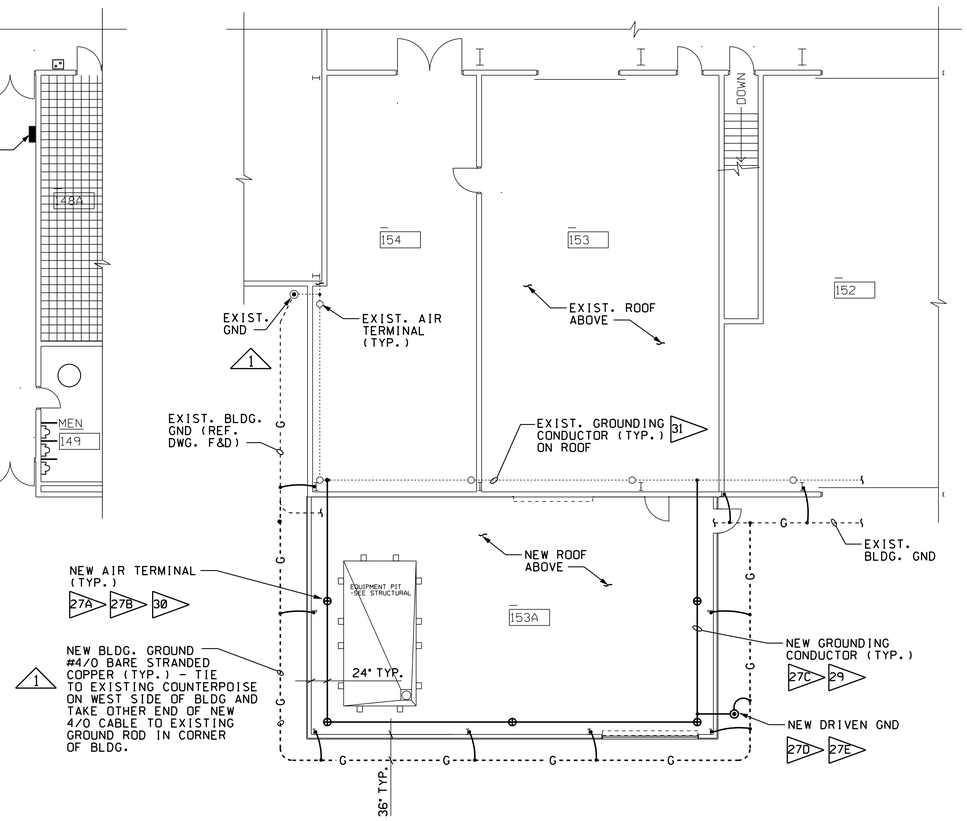

BUILDING 4619
PARTIAL LIGHTNING PROTECTION & GROUNDING PLAN
SCALE: 1/8" = 1'-0"

0 4' 8' 12'

NOTES: (CONTINUED)

17. PROVIDE A ZAM UNIT, SIMPLEX MODEL 4090-9101, TO OPERATE THE TWO CEILING MOUNTED DETECTORS IN ROOM 153A. SOURCE FOR 24VDC CAN BE FOUND IN F.A. J-BOX NEAR COLUMN #3 (OUTSIDE NORTH WALL OF ROOM 152, LOCATED APPROX. 15' HIGH).

18. SEAL ALL CONDUIT PENETRATIONS THRU OUTSIDE WALLS WEATHERTIGHT.

19. REPROGRAM THE EXISTING GRAPHIC DISPLAY SYSTEMS AT CENTRAL FIRE ALARM STATION AND THE CENTRAL MAINTENANCE FACILITY TO REFLECT THE CHANGE IN FIRE ALARM INITIATING DEVICE AS APPLICABLE. THE REPROGRAMMING SHALL BE PERFORMED BY THE QUALIFIED TECHNICIAN SUITABLY TRAINED BY SIMPLEX. THE SYSTEM SHALL BE TESTED FOR PROPER OPERATION AFTER THE REPROGRAMMING IS COMPLETE.

20. NEW COMBINATION STARTER, FUSIBLE TYPE, 3P-480VAC, 5 HP, NEMA SIZE 0, WITH HAND-OFF-AUTO SELECTOR SWITCH, 120VAC CONTROL TRANSFORMER & COIL, AND OVERLOADS IN NEMA 1 ENCLOSURE, SQUARE-D CAT. NO. SBG33V814FFT. FUSE AT 15A D.E. INSTALL OVERLOADS IN ACCORDANCE WITH MOTOR NAMEPLATE DATA. MOUNT ON PLATFORM ABOVE CEILING, NEAR AHU.

21. NEW 120/277VAC, 3-WAY AUTOMATIC WALL SWITCH, WITH BUILT-IN LIGHT SENSOR, AUTOMATIC-ON AND MANUAL-ON OPERATION, DIP SWITCH SETTINGS CONTROL, WATT STOPPER CATALOG NO. WI-200. SET TIME DELAY FOR 14 MINUTES. MOUNT ON WALL AT 54 INCHES A.F.F.

22. NEW MANUAL PULL STATION, SIMPLEX CATALOG NO. 2099. MOUNT ON WALL AT 54 INCHES A.F.F.

23. NEW TRUEALERT ADDRESSABLE HORN/STROBE UNIT, WALL MOUNT, SIMPLEX CATALOG NO. 4903 SERIES. MOUNT ON WALL AT 7 FT. A.F.F.

24. EXISTING 208Y/120VAC BUS DUCT IS FPE TYPE, AND 277Y/480VAC BUS DUCT IS WESTINGHOUSE TYPE. FIELD DETERMINE EXACT NOMENCLATURE AND INSTALL COMPATIBLE BUS DUCT DISCONNECT BREAKER AS SHOWN ON PLAN.

25. ALL WORK FOR THE LIGHTNING PROTECTION SYSTEM SHALL CONFORM TO THE LIGHTNING PROTECTION INSTITUTE STANDARD LPI-175 AND NFPA 780. ALL MATERIALS USED IN THIS INSTALLATION SHALL BE COPPER OR COPPER ALLOY AND SHALL MEET THE REQUIREMENT FOR CLASS I STRUCTURES.

26. THE INSTALLATION SHALL BE ACCOMPLISHED BY AN EXPERIENCED INSTALLER WHO IS A CERTIFIED MASTER INSTALLER OF THE LPI. OR WORK UNDER THE DIRECT SUPERVISION OF AN LPI MANUFACTURER OR HIS LPI CERTIFIED MASTER INSTALLER.

27. MATERIAL USED ARE TO BE THOMPSON LIGHTING PROTECTION, INC. AS FOLLOWS:
   - A. 5/8 X 24" AIR TERMINAL WITH ADAPTER #571
   - B. DIE CAST BASE FOR ADHESIVE MOUNTING ON FLAT ROOF. #688
   - C. CONDUCTORS, 17 GA. 32 STRANDS, 7/16 DIA., #32
   - D. GROUND ROD, 3/4 X 10' . #TL3410
   - E. GROUND ROD CLAMP. #519

28. MAINTAIN HORIZONTAL OR DOWNWARD COURSING OF MAIN CONDUCTORS AND INSURE THAT ALL BENDS HAVE AN 8" MIN. RADIUS, AND DO NOT EXCEED 90 DEGREES. AVOID UNNECESSARY AND TORTUROUS BENDS.

29. SUPPORT ALL BONDING CABLES AND DOWNLEAD CONDUCTORS AT 36" O.C. MAX. VERIFY COMPATIBILITY OF ADHESIVE ON MEMBRANE ROOF APPLICATIONS PRIOR TO INSTALLATION.

30. SECURE AIR TERMINAL POINT BASE TO ROOF WITH "BLACK JACK" ROOFING CEMENT ADHESIVE, OR APPROVED EQUAL. VERIFY COMPATIBILITY OF ADHESIVE WITH ROOF SYSTEM PRIOR TO INSTALLATION.

31. IF NECESSARY, CUT AIR TERMINAL GROUNDING CONDUCTOR TO ALLOW FOR CONNECTION OF NEW ROOF TO EXISTING. RECONNECT WITH STRAIGHT SPLICER WHEN ROOF CONSTRUCTION IS COMPLETE.

LEGEND (NEW INSTALLATION)

- EXIST. PNL'BD TO REMAIN
- FLOUR. LIGHT FIXTURE, "EM" DENOTES EQUIPPED WITH EMERGENCY BALLAST [8]
- BUS DUCT DISCONNECT [24]
- EXTERIOR WALL-MTD LIGHT FIXTURE [10]
- LIGHT FIXTURE MTD. IN PIT [9]
- SAFETY SWITCH W/ 208V RECEPT.
- SAFETY SWITCH [11] [12]
- DUPLEX RECEPT. [7]
- TEMPORARY RECEPT. RELOCATED [6]
- 4P, 4W, 100A RECEPT. [14]
- 4P, 4W, 60A RECEPT. [13]
- DOOR OPERATOR, NUMERAL INDICATES HORSEPOWER [15]
- PUSH BUTTON CONTROL STATION [15]
- SM MANUAL MOTOR STARTER [16]
- (J) JUNCTION BOX
- EXIST. CONDUIT
- —UG— UNDERGROUND CONDUIT
- HOMERUN TO PANELBOARD
- EXIST. SMOKE DETECTOR
- (S) NEW SMOKE DETECTOR [17]
- (F) MANUAL FIRE ALARM PULL STATION [22]
- $A3 AUTOMATIC WALL SW., 3-WAY [21]
- (F3) FLOW SWITCH (REF. MECH.)
- COMBINATION STARTER [20]
- HORN/STROBE UNIT [23]
- GF DENOTES GFIC
- RLD DENOTES RELOCATED POSITION
- RT DENOTES RAINTIGHT

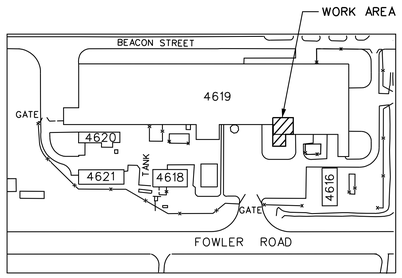

KEY PLAN
NOT TO SCALE

REDUCED SIZE DRAWING
DO NOT SCALE

CADD DRAWING
CHANGES TO THIS DRAWING SHALL BE MADE ON CADD ONLY.
477159 12-11-03 RTS
LATEST CADD UPDATE: 05-03-07 01:00 PM BY: SAMANIEGO

REV.	BY	DATE	REVISION	C.I. NO.	APPROVED
1	RTS	11/07/05	AS-BUILT PER RED-LINED DRAWINGS	477159	JC 11-07-05

CONCURRENCE: AD21 PLANNING OFFICE — DATE:
CONCURRENCE: AD22 PROJECT MANAGER — DATE: 02-24-04
JOE P. EDMONDSON, AD80 ENVIRONMENTAL ENGINEERING DEPT
CONCURRENCE: USING OFFICE — DATE:
CONCURRENCE: AD24 OPERATIONS & MAINTENANCE GROUP — DATE: 02-20-04
JAMES K. SHARP
CONCURRENCE: AD60 ENVIRONMENTAL HEALTH — DATE: 02-20-04
SCOTT PINKSTON
CONCURRENCE: ODSO SAFETY OFFICE — DATE: 02-24-04
DENNIS S. DAVIS
CONCURRENCE: AD32 COMMUNICATIONS OFFICE — DATE: 02-20-04
CHARLES B. WINKLER
TELECOMMUNICATIONS EQUIPMENT AFFECTED BY THIS CONTRACT WORK IS NOT TO BE ALTERED OR REMOVED BY THE CONTRACTOR; CONTACT THE COTR IN THE EVENT OF A CONFLICT

Marshall Space Flight Center
Huntsville, Alabama 35812

WORK REQUEST NO. 477159

BUILDING 4619
TENSILE TEST LAB BUILDING ADDITION
LIGHTING PLAN AND LIGHTNING PROTECTION PLAN

AE FIRM: AJT & ASSOCIATES, INC. HUNTSVILLE - ALABAMA
NASA AE CONTRACT NO. NAS8-00144

SUBMITTED:	APPROVAL RECOMMENDED:	APPROVED:
DAVID A. SELLERS	DAVID L. MARTIN	R. B. FELDER
AE: DATE: 01-21-04	AD22 PROJ. A/E DATE: 02-23-04	AD22 GROUP LEAD DATE: 02-26-04
DESIGNED: J.E. BRANCH	APPROVAL RECOMMENDED: ROBERT S. TALIANKO, AJT & ASSOCIATES, INC.	DRAWING NO.
DRAWN: SAMANIEGO/FLETCHER	AD22 TEAM LEAD DATE: 02-26-04	FAC-FF-4619-E2
CHECKED: M. DEY	SPEC. NO. TSRC-5	SHEET 20 OF 27
SCALE: AS NOTED		

REF. NO. E2 OF 3

MSFC-FORM 232 REV. 8-21-89-MSFC

MSFC MASTER BID DISK 11-18-2013

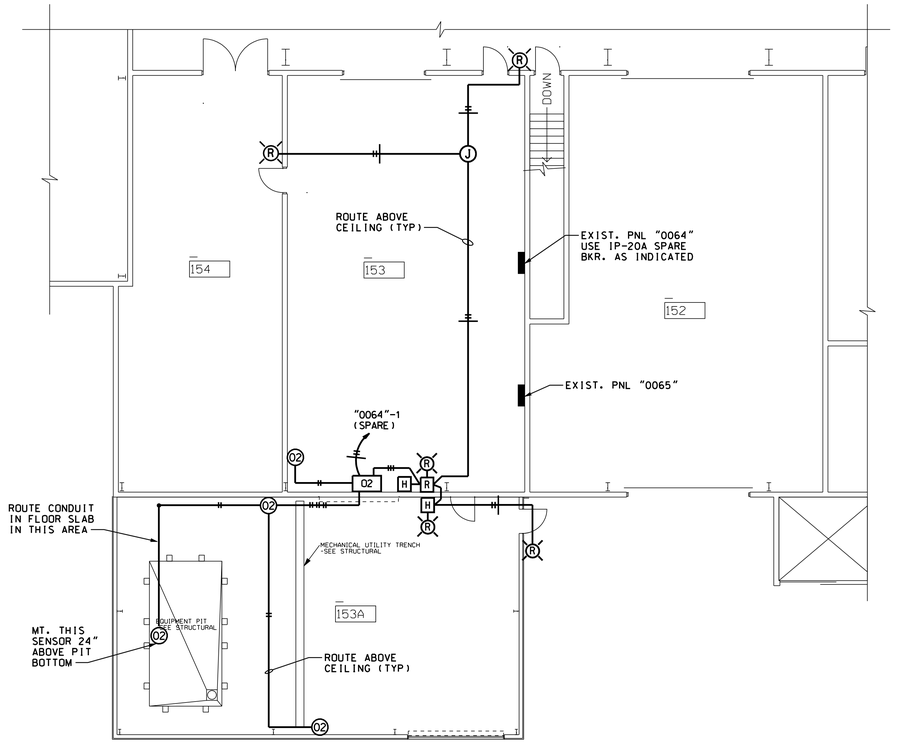

BUILDING 4619
OXYGEN MONITORING SYSTEM PLAN

SCALE: 1/8" = 1'-0"

0 4' 8' 12'

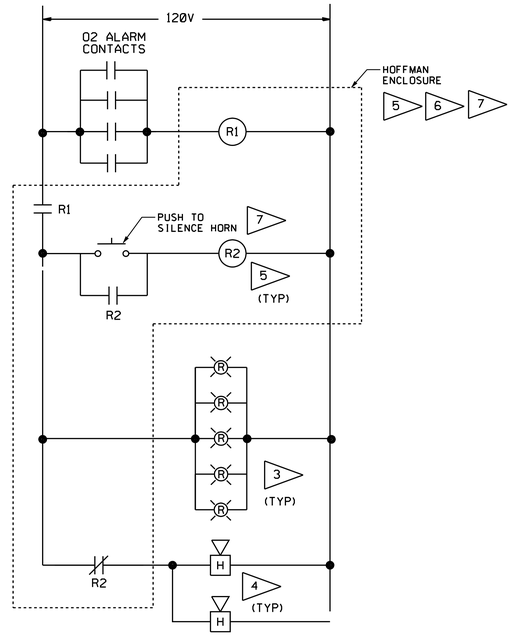

WIRING DIAGRAM

NOT TO SCALE

ELECTRICAL NOTES

1. ALL ELECTRICAL WORK SHALL CONFORM TO THE CURRENT NATIONAL ELECTRICAL CODE AS A MINIMUM STANDARD. WIRING SHALL BE NO.12 TYPE THHN UNLESS OTHERWISE INDICATED. CONDUIT SHALL BE ¾" E.M.T. ITEMS SPECIFIED ARE ON AN "OR APPROVED EQUAL" BASIS. PROVIDE SUBMITTALS FOR APPROVAL PER SCHEDULE OF SUBMITTALS.

2. NEW AMBIENT AIR OXYGEN MONITOR WITH TWO ADJUSTABLE SETPOINTS WITH RELAY CONTACTS AND FOUR REMOTE SENSORS. ALARM SHALL ACTUATE AT 19.5% LOW LEVEL AND 23.5% HIGH LEVEL. GASTECH SAF-T-NET 410. MOUNT ON WALL 60" A.F.F.

3. WARNING LIGHT: SELF-CONTAINED, RED DOME, 90 TIMES PER MINUTE FLASH RATE, 1/2" PIPE MOUNTING, 120 VAC FEDERAL SIGNAL FB2PST. MOUNT APPROX. 7 FT. A.F.F. AND AS INDICATED ON PLAN.

4. VIBRATING HORN: 100 DB AT TEN FEET, GRAY ENAMEL FINISH, 120 VAC FEDERAL SIGNAL 350 WITH NB BOX. MOUNT APPROX. 7 FT. A.F.F.

5. INDUSTRIAL CONTROL RELAY: 120 VAC, 10A, 60 HZ, WITH TWO CONVERTIBLE INSTANTANEOUS CONTACTS. CONTACTS SHALL BE AS SHOWN IN THE DRAWING, SQD. #8501-X020-V02. MOUNT IN THE HOFFMAN ENCLOSURE. CONNECT UCS WIRING TO SPARE N.C. CONTACT OF RELAY "R1". SEE UCS DRAWING FOR WIRING DIAGRAM.

6. HOFFMAN ENCLOSURE: 8" x 6" x 6" NEMA 1. CATALOG NO. A-8N66 WITH A-8N6P PANEL. SURFACE MOUNT ON WALL 54" A.F.F.

7. PUSH BUTTON OPERATOR: MOMENTARY CONTACTS WITH ONE N.O. AND N.C. CONTACT. SQUARE-D TYPE SKR-1BH13. MOUNT IN COVER OF HOFFMAN ENCLOSURE. LABEL AS FOLLOWS: "HORN SILENCE".

8. INSTALL SIGN NEAR EACH WARNING LIGHT PER SIGN DETAIL.

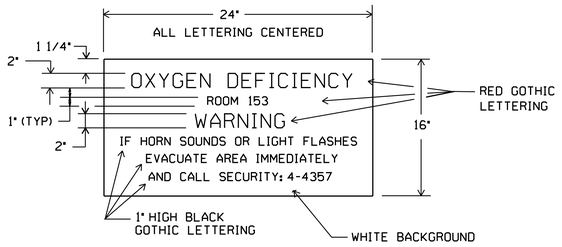

TYPICAL SIGN DETAIL "A" 8

N. T. S.

LEGEND	
▬	EXISTING PANEL
02	OXYGEN MONITOR 2
H	WARNING HORN 4
⫽	WIRING IN CONDUIT, SLASHMARKS INDICATE # OF CONDUCTORS
R	CONTROL RELAY ENCLOSURE 6
(R)	WARNING LIGHT 3
(02)	OXYGEN SENSOR 2

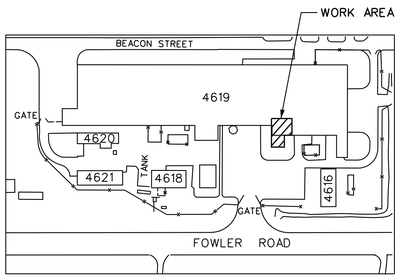

KEY PLAN

NOT TO SCALE

REDUCED SIZE DRAWING

DO NOT SCALE

CADD DRAWING

CHANGES TO THIS DRAWING SHALL BE MADE ON CADD ONLY.

477159 12-11-03 RTS

LATEST CADD UPDATE: 11-30-05 12:15 PM

BY: SAMANIEGO

REV.	BY	DATE	REVISION	C.J. NO.	APPROVED
1	RTS	11-30-05	AS-BUILT	477159	JC 11-30-05

CONCURRENCE: DATE:

AD21 PLANNING OFFICE

CONCURRENCE: DATE:

AD22 PROJECT MANAGER

CONCURRENCE: DATE: 02-24-04

JOE P. EDMONDSON

AD10 ENVIRONMENTAL ENGINEERING DEPT

CONCURRENCE: DATE:

USING OFFICE

CONCURRENCE: DATE: 02-20-04

JAMES K. SHARP

AD24 OPERATIONS & MAINTENANCE GROUP

CONCURRENCE: DATE: 02-20-04

SCOTT PINKSTON

AD60 ENVIRONMENTAL HEALTH

CONCURRENCE: DATE: 02-24-04

DENNIS S. DAVIS

OD50 SAFETY OFFICE

CONCURRENCE: DATE: 02-20-04

CHARLES B. WINKLER

AD32 COMMUNICATIONS OFFICE

TELECOMMUNICATIONS EQUIPMENT AFFECTED BY THIS CONTRACT WORK IS NOT TO BE ALTERED OR REMOVED BY THE CONTRACTOR. CONTACT THE COTR IN THE EVENT OF A CONFLICT

REF. NO. E3 OF 3

Marshall Space Flight Center
Huntsville, Alabama 35812

WORK REQUEST NO. 477159

BUILDING 4619
TENSILE TEST LAB BUILDING ADDITION
OXYGEN MONITORING SYSTEM PLAN

AE FIRM: AJT & ASSOCIATES, INC. HUNTSVILLE - ALABAMA			NASA AE CONTRACT NO. NAS8-00144
SUBMITTED: DAVID A. SELLERS	APPROVAL RECOMMENDED: DAVID L. MARTIN		APPROVED: R. B. FELDER
AE: DATE: 01-21-04	AD22 PROJ. A/E: DATE: 02-23-04		AD22 GROUP LEAD: DATE: 02-26-04
DESIGNED: J.E. BRANCH	APPROVAL RECOMMENDED: ROBERT S. TALIANKO AJT & ASSOCIATES, INC.		DRAWING NO. FAC-FF-4619-E3
DRAWN: SAMANIEGO/FLETCHER			
CHECKED: M. DEY	AD22 TEAM LEAD: DATE: 02-26-04		SHEET 21 OF 27
SCALE: AS NOTED	SPEC. NO. TSRC-5		

MSFC-FORM 232 REV. 8-21-89-RCL

MSFC MASTER BID DISK 11-18-2013

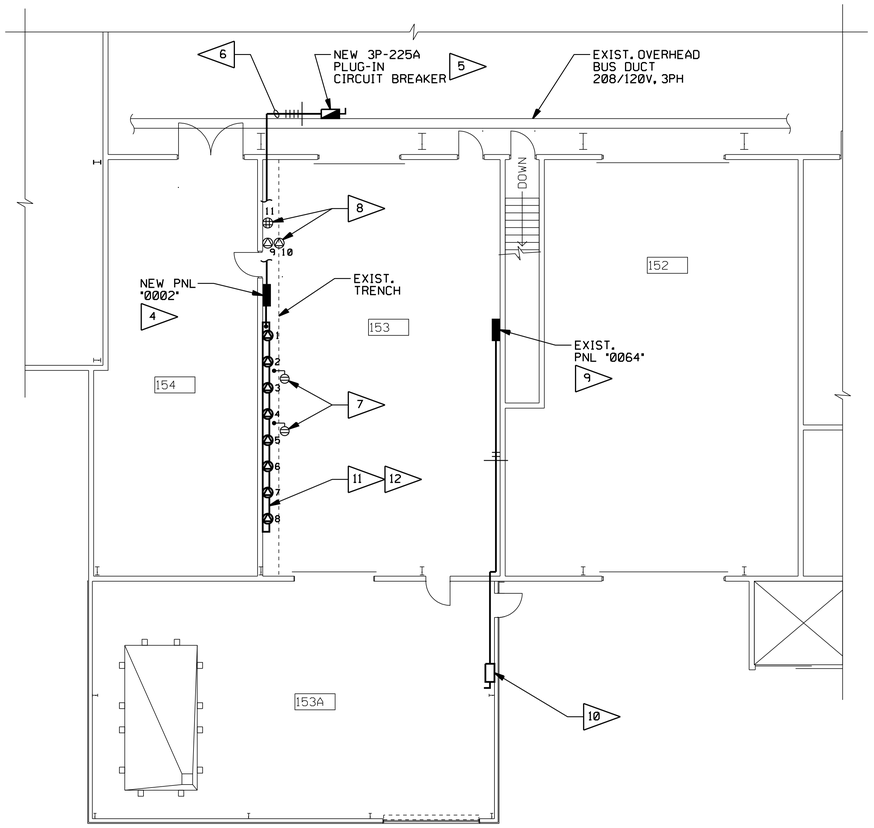

POWER PLAN
SCALE: 1/8" = 1'-0" 0 4' 8' 12'

ELECTRICAL NOTES: (THIS SHEET ONLY)

1. ALL ELECTRICAL WORK SHALL CONFORM TO 2005 NEC AND TSRC-6 AS MINIMUM STANDARDS.

2. ALL ITEMS ARE SPECIFIED ON AN "OR APPROVED EQUAL" BASIS. EQUIPMENT TYPE NUMBERS REFER TO THOSE DEFINED IN SPECIFICATION TSRC-6 AND CONTRACT DRAWINGS.

3. EXISTING PANELBOARD "4619-PNL0002" TO BE REPLACED. PANELBOARD IS FED FROM "IRV-4" LOCATED NEAR COLUMN NO. 6, SOUTHSIDE OF EAST HIGHBAY.

   REMOVE FEEDER WIRES BACK TO "IRV". CUT RISER TO ABOVE CEILING AND ABANDON. UPDATE LABELING TO REFLECT SPARE.

4. REPLACE EXISTING PANEL WITH A NEW 208Y/120VAC, 3 PHASE, 4W, 225A, 30 POSITION, SURFACE MOUNTING, NEMA 1 PANELBOARD. INSTALL TEN (10) 1P-40A BRANCH CIRCUIT BREAKERS IN POSITIONS 1 THRU 10; INSTALL EIGHT (8) 1P-20A BRANCH CIRCUIT BREAKERS IN POSITIONS 11 THRU 18. BREAKERS NOT INDICATED TO BE USED SHALL BE SPARES. PANEL SHALL BE SQUARE D TYPE NOOD. USE OOB BREAKERS. PANEL SHALL HAVE A 3P-225A MOLDED CASE SWITCH AS MAIN BREAKER.

5. INSTALL A NEW 3P-225A PLUG-IN CIRCUIT BREAKER ON EXISTING OVERHEAD BUS DUCT. DUCT IS WESTINGHOUSE FPE TYPE. FIELD DETERMINE EXACT NOMENCLATURE BEFORE ORDERING BREAKER.

6. RUN FOUR (4) NO. 3/0 AND ONE (1) NO. 4 GROUND IN $2^{1}/_{2}$" EMT FROM NEW BREAKER ON BUS DUCT TO NEW PANEL.

7. SURFACE MOUNTED DUPLEX RECEPTACLES ARE TO BE REMOVED. CONDUITS ARE ROUTED IN FLOOR TRENCH. DETERMINE SOURCE IN FIELD.

8. EXISTING RECEPTACLES ARE TO BE RE-CIRCUITED FROM NEW PANELBOARD. RUN FOUR (4) NO. 8 AND TWO (2) NO. 10 GROUND IN 1" EMT FOR 40A RECEPTACLES. RUN TWO (2) NO. 12 AND ONE (1) NO. 12 GROUND FOR QUADPLEX RECEPTACLE.

9. EXISTING CIRCUIT BREAKER PANELBOARD "4619-PNL0064". 208Y/120VAC, 3 PHASE, 4W, 100A. REMOVE EXISTING 1P-20A SPARE BREAKERS IN POSITIONS 7 AND 9 AND INSTALL A NEW 2P-30A BRANCH CIRCUIT BREAKER. RE-LABEL SCHEDULE.

10. NEW 3P-30A, 600VAC, NEMA 1, NON-FUSIBLE SAFETY SWITCH. MOUNT NEXT TO COLUMN. SQUARE D HU361. USE TWO POLES FOR 208VAC, SINGLE PHASE RUN TWO (2) NO. 10 AND ONE (1) NO. 10 IN $^{3}/_{4}$" EMT FROM "4619-PNL0064, 7 AND 9. ROUTE CONDUIT ABOVE SUSPENDED CEILING.

11. TWO-PIECE STEEL SURFACE RACEWAY. WIREMOLD 4000 SERIES. SURFACE MOUNT AT APPROXIMATE TOP ELEVATION OF 46". INSTALL DEVICES AS SHOWN ON PLAN. FINISH SHALL BE STANDARD IVORY SCUFFCOAT.

12. INSTALL NEW 125VAC, 2P-3W GROUNDING, 50A TWIST-LOCK RECEPTACLE. HUBBELL NO. 3771. MOUNT IN WIREMOLD WITH COVERPLATE.

WARNING
DO NOT SCALE THIS DRAWING
THIS DRAWING WAS DESIGNED TO BE PRINTED AT A NASA SHEET SIZE: MSFC STD. SIZE 40" X 28"

PRELIMINARY CADD DWG.
CHANGES TO THIS DRAWING SHALL BE MADE ON CADD ONLY.
477159.B 05-20-05 DBT
LATEST CADD UPDATE: 11-30-05 02:00 PM
BY: SAMANIEGO

CONCURRENCE: DATE:
AD21 PLANNING OFFICE
CONCURRENCE: DATE:
AD23 PROJECT MANAGER
CONCURRENCE: DATE:
AD10 ENVIRONMENTAL ENGINEERING DEPT
CONCURRENCE: DATE:
USING OFFICE
CONCURRENCE: DATE:
AD24 OPERATIONS & MAINTENANCE GROUP
CONCURRENCE: DATE:
AD60 ENVIRONMENTAL HEALTH
CONCURRENCE: DATE:
OD50 SAFETY OFFICE
CONCURRENCE: DATE:
AD32 COMMUNICATIONS OFFICE
TELECOMMUNICATIONS EQUIPMENT AFFECTED BY THIS CONTRACT WORK IS NOT TO BE ALTERED OR REMOVED BY THE CONTRACTOR. CONTACT THE COTR IN THE EVENT OF A CONFLICT
REF. NO. E4 OF 4

REV.	BY	DATE	REVISION	C.I. NO.	APPROVED
2	RTS	11-30-05	AS-BUILT	477159	11-30-05
1	VDS	05-24-05	THIS SHEET ADDED TO DRAWING PACKAGE	477159.B	

Marshall Space Flight Center
Huntsville, Alabama 35812

WORK REQUEST NO. 477159.B

BUILDING 4619

TENSILE TEST LAB BUILDING ADDITION

POWER PLAN AND NOTES

AE FIRM: SEI Group, Inc.
NASA AE CONTRACT NO. NNM05AB09C
SUBMITTED: DAVID A. SELLERS
APPROVAL RECOMMENDED:
APPROVED:
AE: DATE:
AD22 PROJ. A/E: DATE:
AD22 GROUP LEAD: DATE:
DESIGNED: D. SANDERS
DRAWN: B. THOMPSON
CHECKED: J. E. BRANCH
APPROVAL RECOMMENDED: SEI Group, Inc
AD22 TEAM LEAD: DATE:
SCALE: AS NOTED
SPEC. NO. TSRC-6
DRAWING NO. FAC-FF-4619-E4
SHEET 22 OF 27

MSFC-FORM 232 REV. 8-21-89-PCL

MSFC MASTER BID DISK 11-18-2013

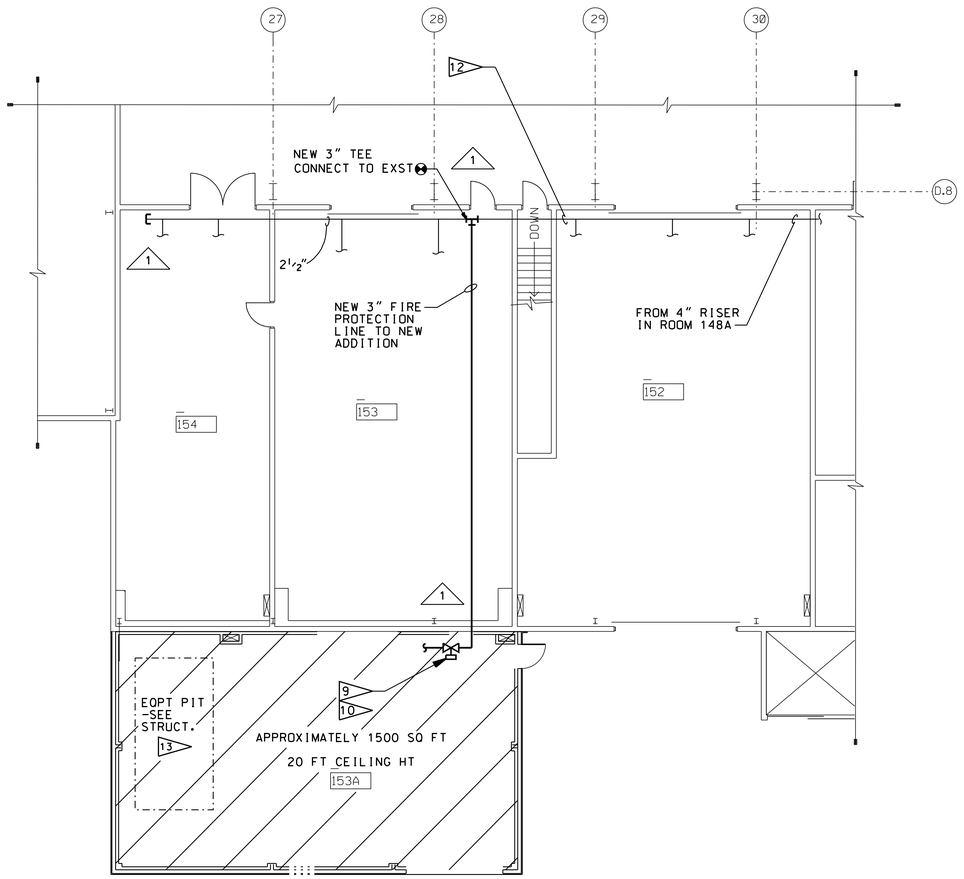

BUILDING 4619
PARTIAL FLOOR PLAN

SCALE: 1/8" = 1'-0" 0 4' 8' 12'

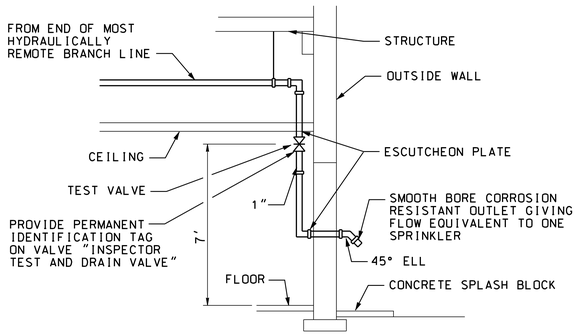

INSPECTOR'S SPRINKLER TEST PIPE

NTS

NOTE:
COORDINATE PIPE LOCATION SO PENETRATION THRU THE EXTERIOR PANEL OCCURS IN THE VALLEY OF THE CORRUGATIONS

FIRE PROTECTION NOTES

1. ALL ITEMS ARE SPECIFIED ON AN "OR APPROVED EQUAL" BASIS. EQUIPMENT TYPE NUMBERS REFER TO THOSE DEFINED IN SPECIFICATION TSRC-5 AND CONTRACT DRAWINGS. PROVIDE SUBMITTALS FOR APPROVAL PER SPEC SECTION 01330 AND THE SCHEDULE OF SUBMITTALS. AT THE ENGINEER'S DISCRETION, SUBMITTALS MAY BE WAIVED FOR SPECIFIC ITEMS IF THE SPECIFIED EQUIPMENT MAKE AND MODEL NUMBERS ARE TO BE PROVIDED. WAIVERS MUST BE REQUESTED IN WRITING.
2. PROTECT ALL AREAS OF THE NEW BUILDING ADDITION (APPROX. 1,500 SQUARE FEET). CONTRACTOR SHALL EXTEND THE EXISTING WET- PIPE SPRINKLER SYSTEM PROTECTING THE NEW BUILDING TO THE NEW BUILDING ADDITION:

   OCCUPANCY CLASSIFICATION: ORDINARY HAZARD GROUP 1
   ORDINARY HAZARD PIPE SCHEDULE
3. INSULATE ALL NEW PIPING TO MATCH EXISTING TO INCLUDE ABOVE THE NEW ADDITION.
4. CONTRACTOR SHALL INSTALL ALL SPRINKLER HEADS IN THE CENTER OF THE CEILING TILES. SPRINKLER HEADS IN ARCHITECTURAL FINISH AREAS SHALL BE RECESSED PENDANT TYPE WITH ADJUSTABLE ESCUTCHEON. SPRINKLER HEADS IN UNFINISHED AREAS SHALL BE PENDANT, UPRIGHT, OR SIDEWALL.
5. CONTRACTOR SHALL INSTALL SPRINKLER PIPING AND HEADS SUCH THAT NO INTERFERENCE OCCURS WITH THE LIGHTS, DUCTWORK, DIFFUSERS RETURN GRILLES, MECHANICAL TEST EQUIPMENT (SEE NOTE 13), OR OTHER SYSTEMS.
6. CONTRACTOR SHALL INSTALL SPRINKLER PIPING IN ARCHITECTURAL FINISHED AREAS SO THAT PIPING IS CONCEALED BY ARCHITECTURAL FINISHES.
7. IT IS THE INTENT THAT ALL SPRINKLER AND DRAIN PIPING BE INSTALLED WITHOUT PENETRATING STRUCTURAL MEMBERS WITHIN THE BUILDING. CONTRACTOR SHALL OBTAIN APPROVAL FROM COTR BEFORE PENETRATING ANY STRUCTURAL MEMBER.
8. CONTRACTOR SHALL SEAL ALL PENETRATIONS IN FIRE/SMOKE PARTITIONS OF 1-HOUR AND 2-HOUR RATINGS.

9> CONTRACTOR SHALL INSTALL THE NEW SPRINKLER SYSTEM UTILIZING A FLOW SWITCH TO ENSURE THAT THE LOCATION OF SPRINKLER SYSTEM OPERATION CAN BE IDENTIFIED UTILIZING THE EXISTING FIRE ALARM SYSTEM.

10> CONTRACTOR SHALL TIE THE FLOW SWITCH INTO THE EXISTING FIRE DETECTOR CIRCUIT ZONE #8.

1 11> NOT USED.

12> CONTRACTOR SHALL HEAT TRACE AND INSULATE ALL NEW PIPING. HEAT TRACE CABLE AND INSULATION TO MATCH THE EXISTING SYSTEM PIPING. HEAT TRACE WITH CHROMALOX OR EQUAL SELF-REGULATING RAPID TRACE HEATING CABLE, CAT. NO. RTSR-4L16-1, 120 VOLT, 4 WATTS/FOOT. INSULATE WITH JOHNS MANVILLE, OR EQUAL, 2-INCH-THICK FIBERGLAS INSULATION WITH ZESTON FITTINGS SEALED WITH 1-1/2-INCH PVC TAPE.

13> CONTRACTOR SHALL TAKE SPECIAL CARE IN THIS AREA TO AVOID THE TENSILE TEST EQUIPMENT. COVERAGE IS TO BE MAINTAINED BUT PIPING MUST NOT EXTEND ABOVE TEST EQUIPMENT IN THIS AREA. CLOSELY COORDINATE WITH COTR AND EQUIPMENT CONTRACTOR WHEN INSTALLING PIPING AND/OR SPRINKLERS IN THIS AREA.

LEGEND

———	NEW
———	EXISTING
OH-1	ORDINARY HAZARD (GROUP 1)
	VALVE (FLOW SWITCH)

FIRE PROTECTION DRAWINGS ARE FOR ESTIMATING PURPOSES ONLY. ACTUAL FIRE PROTECTION DESIGN SHALL BE PERFORMED BY A PERSON CERTIFIED FOR FIRE PROTECTION DESIGN.

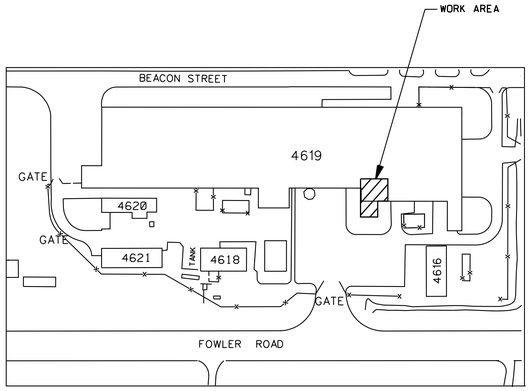

KEY PLAN
NOT TO SCALE

REDUCED SIZE DRAWING
DO NOT SCALE

CADD DRAWING
CHANGES TO THIS DRAWING SHALL BE MADE ON CADD ONLY.
477159 11-24-03 WNC
LATEST CADD UPDATE: 10-26-05 09:30 AM
BY: SAMANIEGO

REV.	BY	DATE	REVISION	C.I. NO.	APPROVED
1	RTS	10-26-05	AS-BUILT PER RED-LINED DRAWING	477159	

CONCURRENCE: AD21 PLANNING OFFICE — DATE:
CONCURRENCE: AD22 PROJECT MANAGER — DATE:
CONCURRENCE: JOE P. EDMONDSON, AD10 ENVIRONMENTAL ENGINEERING DEPT — DATE: 02-24-04
CONCURRENCE: USING OFFICE — DATE:
CONCURRENCE: JAMES K. SHARP, AD24 OPERATIONS & MAINTENANCE GROUP — DATE: 02-20-04
CONCURRENCE: SCOTT PINKSTON, AD60 ENVIRONMENTAL HEALTH — DATE: 02-20-04
CONCURRENCE: DENNIS S. DAVIS, OD50 SAFETY OFFICE — DATE: 02-24-04
CONCURRENCE: CHARLES B. WINKLER, AD32 COMMUNICATIONS OFFICE — DATE: 02-20-04
TELECOMMUNICATIONS EQUIPMENT AFFECTED BY THIS CONTRACT WORK IS NOT TO BE ALTERED OR REMOVED BY THE CONTRACTOR. CONTACT THE COTR IN THE EVENT OF A CONFLICT

REF. NO. FP1 OF 1

Marshall Space Flight Center
Huntsville, Alabama 35812

WORK REQUEST NO. 477159

BUILDING 4619

TENSILE TEST LAB BUILDING ADDITION

SPRINKLER PLAN, DETAILS AND NOTES

AE FIRM: AJT & ASSOCIATES, INC. HUNTSVILLE - ALABAMA			NASA AE CONTRACT NO. NAS8-00144
SUBMITTED: DAVID A. SELLERS	APPROVAL RECOMMENDED: DAVID L. MARTIN		APPROVED: R. B. FELDER
AE: DATE: 01-21-04	AD22 PROJ. A/E DATE: 02-23-04	AD22 GROUP LEAD DATE: 02-26-04	
DESIGNED: K. M. BALDWIN	APPROVAL RECOMMENDED: ROBERT S. TALIANKO AJT & ASSOCIATES, INC.		DRAWING NO. FAC-FF-4619-FP1
DRAWN: WNCarverJr.			
CHECKED: A. K. CAMPBELL	AD22 TEAM LEAD DATE: 02-26-04		
SCALE: AS NOTED	SPEC. NO. TSRC-5		SHEET 23 OF 27

MSFC-FORM 232 REV. 6-21-89-RCL

MSFC MASTER BID DISK 11-18-2013

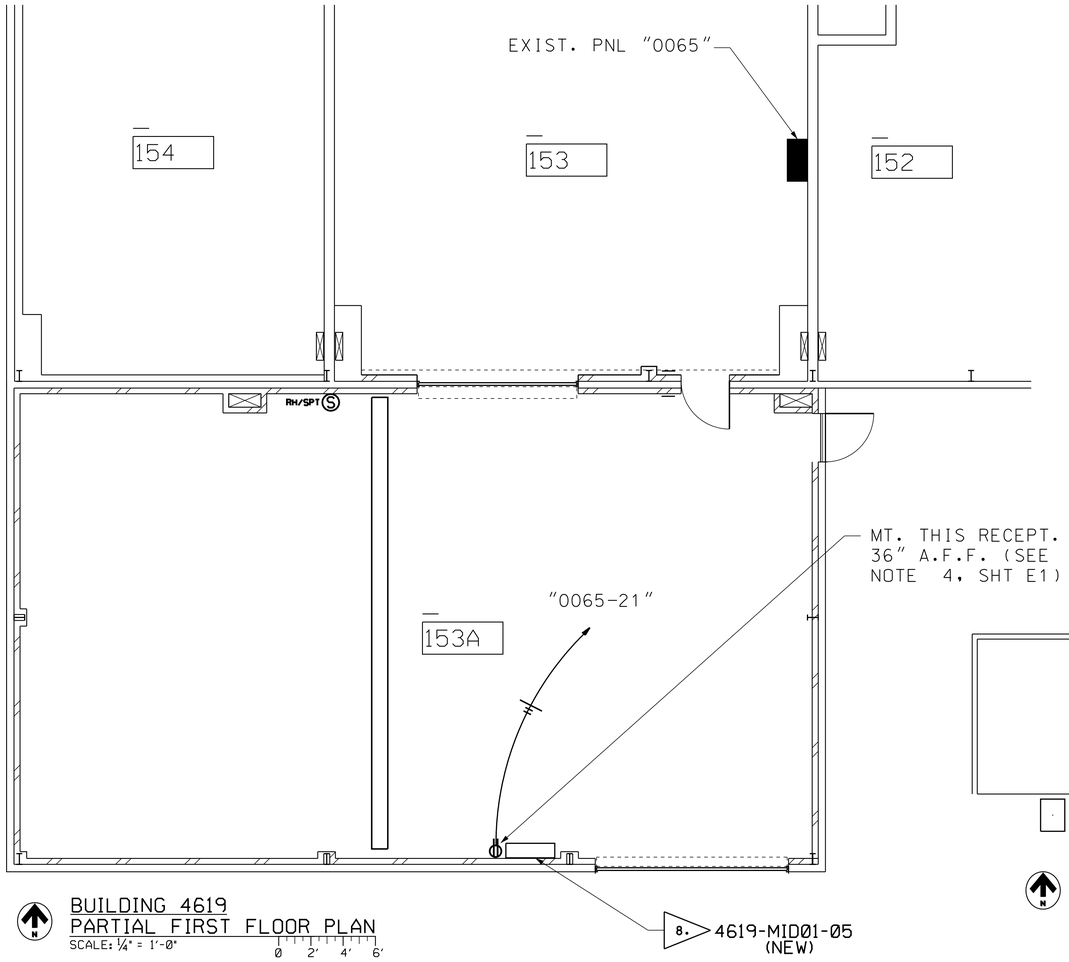

BUILDING 4619
PARTIAL FIRST FLOOR PLAN
SCALE: 1/4" = 1'-0" 0 2' 4' 6'

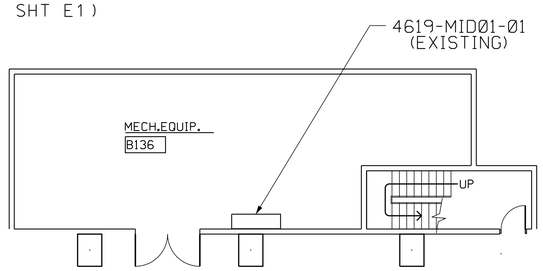

BUILDING 4619
PARTIAL BASEMENT FLOOR PLAN
SCALE: 1/8" = 1'-0" 0 4' 8' 12'

UCS NOTES:

1. ALL ELECTRICAL WORK SHALL COMPLY WITH 2002 NATIONAL ELECTRICAL CODE AND SPEC TSRC-5 AS MINIMUM STANDARDS. ITEMS SPECIFIED BY BRAND NAME AND PART NUMBER SHALL NOT BE SUBSTITUTED SO THAT CONTROL SYSTEM COMPATIBILITY IS ASSURED.
2. SENSOR CABLE SHALL BE 2 CONDUCTOR AS SHOWN. TINNED COPPER. PVC INSULATED TWISTED PAIRS. BELDFOIL ALUMINUM-POLYESTER SHIELD. EACH PAIR HAVING A 22 AWG STRANDED TINNED COPPER DRAIN WIRE. OVERALL PVC JACKETED SHEATH. 1 PAIR COLOR CODE: BLACK/RED 22 GA. (7X28) BELDEN PART# 1266A
3. CONTRACTOR SHALL FURNISH ALL PARTS NECESSARY FOR COMPLETION OF WORK.
4. UPON COMPLETION OF ALL U.C.S. RELATED WORK. A POINT TO POINT CHECKOUT SHALL BE CONDUCTED JOINTLY BY U.C.S. PERSONNEL AND THE CONTRACTOR. PH# 544-4000.
5. CONTRACTOR SHALL PROVIDE PERSONALITY MODULES FOR ANALOG INPUTS (AI). DORSETT'S INC. PART# 400-R-500-6.
6. INSTALL A NEW POWER FAIL MONITOR AS SHOWN IN SK 'PFR1' AT UPS LOCATION.
7. MICROSCAN PRODUCTS ARE AVAILABLE FROM DORSETT'S INC. PH # 336-679-2126.
8. CONTRACTOR SHALL PROVIDE AND INSTALL A NEW MICROSCAN 6 CARD MUX ENCLOSURE AT THE LOCATION SHOWN. PART NUMBERS AND QTY FOR MID01-05 ARE AS FOLLOWS:

NAME	PART NO.	QTY.
MUX ENCLOSURE	401-A-635-8	1
MUX CARD	401-A-300-3R	1

9. CONTRACTOR SHALL PROVIDE A NEMA TYPE 3R CABLE TROUGH ABOVE AND BELOW THE MICROSCAN MUX PANEL. ALL CONDUIT PENETRATIONS ON THE NEW MICROSCAN PANEL SHALL BE IN THE BOTTOM. CABLE TROUGH SHALL BE HOFFMAN PART NUMBER A-6636RT.
10. CONTRACTOR SHALL INSTALL A GROUNDING TERMINAL STRIP IN THE BOTTOM OF THE CABLE TROUGH AND ALL SHIELDS FROM SENSOR CABLES SHALL BE TERMINATED AT GROUND TERMINAL.
11. CONTRACTOR SHALL INSTALL A 1KW UPS FOR THE NEW MID01-05. MOUNT UPS ON A METAL SHELF NEXT TO THE MUX PANEL. SEE SK 'MS6'.
12. 24VAC POWER FOR VALVE AND DAMPER ACTUATORS SHALL BE PROVIDED AS SHOWN IN SK 'PS1'. LOCATE THE PS1 UNIT NEXT TO THE NEW MUX PANEL.
13. CONTRACTOR SHALL INSTALL A NEW COMMUNICATION TRUNK BETWEEN THE NEW MID01-05 AND THE EXISTING MID01-01.
14. CONTRACTOR SHALL PROVIDE PROGRAMMING OF ALL DATABASE POINTS TO THE INFOSCAN DATABASE TO ENABLE A COMPLETELY OPERATIONAL SYSTEM.

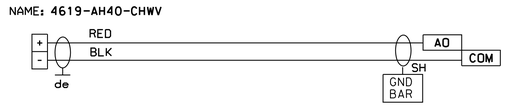

TYPICAL ANALOG OUTPUT (AO) TO FIELD DEVICE WIRING DIAGRAM

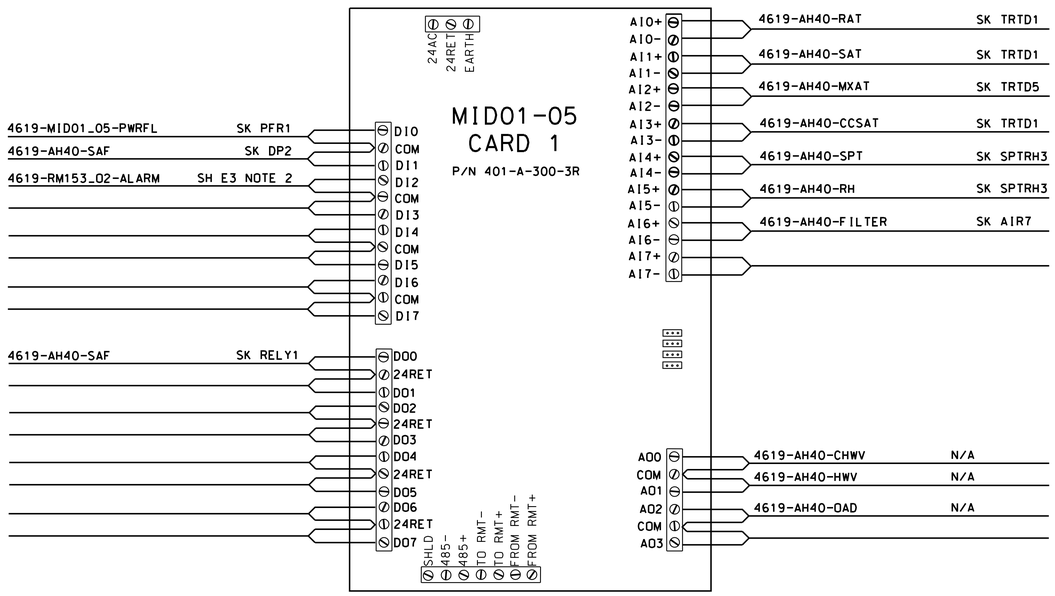

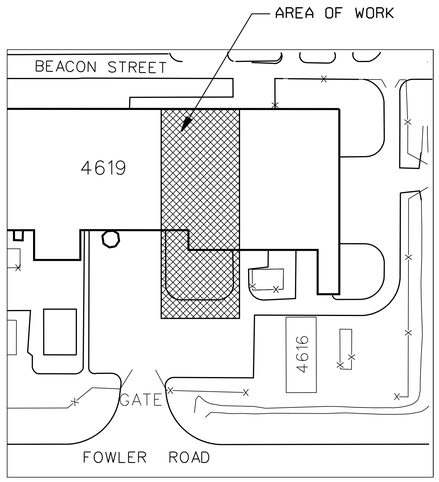

KEY PLAN
N.T.S.

REDUCED SIZE DRAWING
DO NOT SCALE

CADD DRAWING
CHANGES TO THIS DRAWING SHALL BE MADE ON CADD ONLY.
477159 12-22-03 JEP
LATEST CADD UPDATE: 11-03-05 12:30 PM BY: SAMANIEGO

REV.	BY	DATE	REVISION	C.I. NO.	APPROVED
1	RTS	11-03-05	AS-BUILT	477159	JC 11-03-05

CONCURRENCE: AD21 PLANNING OFFICE — DATE:
CONCURRENCE: AD22 PROJECT MANAGER — DATE:
CONCURRENCE: JOE P. EDMONDSON, AD10 ENVIRONMENTAL ENGINEERING DEPT — DATE: 02-24-04
CONCURRENCE: USING OFFICE — DATE:
CONCURRENCE: JAMES K. SHARP, AD24 OPERATIONS & MAINTENANCE GROUP — DATE: 02-20-04
CONCURRENCE: SCOTT PINKSTON, AD60 ENVIRONMENTAL HEALTH — DATE: 02-20-04
CONCURRENCE: DENNIS S. DAVIS, OD50 SAFETY OFFICE — DATE: 02-24-04
CONCURRENCE: CHARLES B. WINKLER, AD32 COMMUNICATIONS OFFICE — DATE: 02-20-04
TELECOMMUNICATIONS EQUIPMENT AFFECTED BY THIS CONTRACT WORK IS NOT TO BE ALTERED OR REMOVED BY THE CONTRACTOR. CONTACT THE COTR IN THE EVENT OF A CONFLICT

Marshall Space Flight Center
Huntsville, Alabama 35812

WORK REQUEST NO. 477159

BUILDING 4619

TENSILE TEST LAB BUILDING ADDITION
UCS EQUIPMENT LOCATIONS, WIRING AND NOTES

AE FIRM: AJT & ASSOCIATES, INC. HUNTSVILLE - ALABAMA		NASA AE CONTRACT NO. NAS8- 00144
SUBMITTED: DAVID A. SELLERS	APPROVAL RECOMMENDED: DAVID L. MARTIN	APPROVED: R. B. FELDER
AE: DATE: 01-21-04	AD22 PROJ. A/E DATE: 02-23-04	AD22 GROUP LEAD DATE: 02-26-04
DESIGNED: J PAGE/J BRANCH	APPROVAL RECOMMENDED: ROBERT S. TALIANKO AJT & ASSOCIATES,INC.	DRAWING NO. FAC-FF-4619-UCS1
DRAWN: J PAGE		
CHECKED: W HENDRIX/M DEY	AD22 TEAM LEAD DATE: 02-26-04	
SCALE: AS NOTED	SPEC. NO. TSRC-5	SHEET 24 OF 27

REF. NO. UCS1 OF 4

MSFC-FORM 232 REV. 8-21-89-MCL

MSFC MASTER BID DISK 11-18-2013

DP2

SPECIFICATION SHEET

LOW DIFFERENTIAL PRESSURE SWITCH

MEDIA: AIR DELTA-PRESSURE ACROSS FAN OR FILTER.
MAXIMUM SURGE PRESSURE: 10 PSIG
TEMPERATURE LIMITS: -30 TO 180 DEGREES
RATED PRESSURE: 45" H_2O

PRESSURE CONNECTIONS: 1/8" NPT
SWITCH TYPE: SPDT
CONTACT RATING: 10 AMPS AT 120 VAC
TERMINATIONS: 3 SCREW TYPE

SET POINT ADJUSTMENT: SCREW TYPE INSIRE CONDUIT ENCLOSURE.
ADJUSTABLE OVER ENTIRE RANGE.

OPERATING RANGE: 0.15 TO 0.5 INCHES OF WATER
DEAD BAND: BETWEEN 0.10 AND 0.15 INCHES OF WATER
HOUSING: ZINC DIE CASTING AND ZINC PLATED STEEL STAMPING. COMPLETELY ENCLOSED.
DIAPHRAGM: 3 1/2" DIAMETER, MOLDED SILICONE RUBBER
CALIBRATION SPRING: STAINLESS STEEL
INSTALLATION: DIAPHRAGM VERTICAL
ENVIRONMENT: INSIDE
CONDUIT CONNECTION: 1/4" BRASS HOSE BARB

NOTE: THIS PRESSURE SWITCH SHALL BE DWYER INSTRUMENTS, INC., CATALOG NO. 1910-0

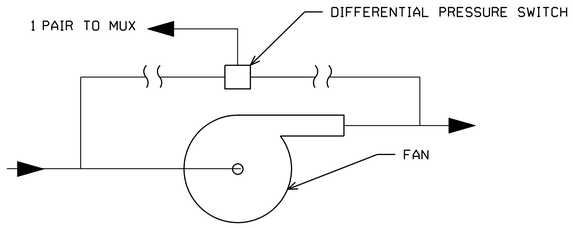

SCHEMATIC DIAGRAM

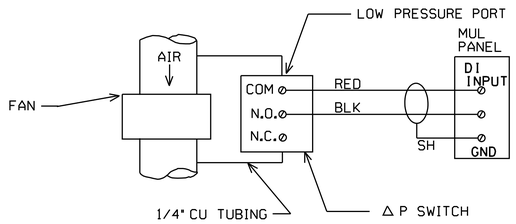

WIRING DIAGRAM

SENSOR CABLE	MUX PANEL

AIR7

VERY LOW DIFFERENTIAL PRESSURE TRANSDUCER

TYPE: GAUGE
INPUT VOLTAGE: 9 TO 30VDC UNREGULATED
OUTPUT: 4MA TO 20MA PROPORTIONAL TO PRESSURE APPLIED, 2 WIRE SYSTEM
ENCLOSURE: FIRE RETARDANT GLASS FILLED POLYESTER
STATIC ERROR: ± 0.25-1.0% FULL SCALE (DEPENDING ON OPTION SELECTED)
OPERATING TEMPERATURE RANGE: 0° F TO +150° F
EXTERNAL ADJUSTMENTS: ZERO AND SPAN
TEMPERATURE EFFECT: ZERO/SPAN SHIFT: ±0.033% F.S. PER DEGREE F
PROOF PRESSURE: 10 PSI
OUTPUT IMPEDANCE: 100 OHMS
PRESSURE PORTS: 1/4" BRASS HOSE BARB
ELECTRICAL CONNECTIONS: 2 NO. 22 AWG COPPER WIRES, PVC INSULATED, 24" LONG

SIZING INFORMATION:

PRESSURE RANGE: 0 TO 2.5" WC
• MODEL NOS. 2651-2R5WD-11-A1-C (WITH OPTIONAL CONDUIT ENCLOSURE)

T1

A1

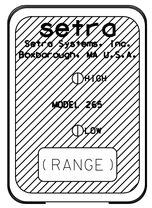

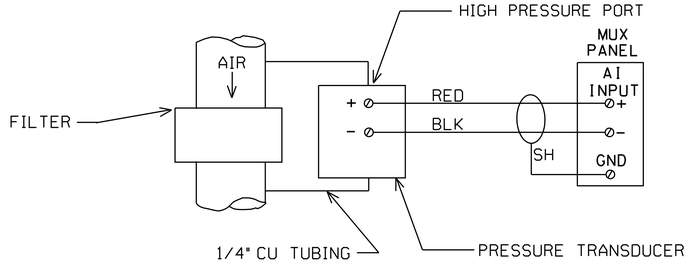

WIRING DIAGRAM

SENSOR CABLE	MUX PANEL

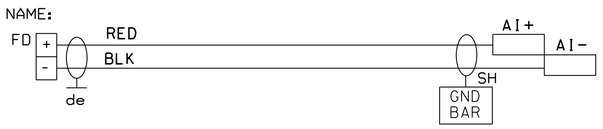

RELY1

MAINTAINED START CIRCUIT
USING HOA SWITCH

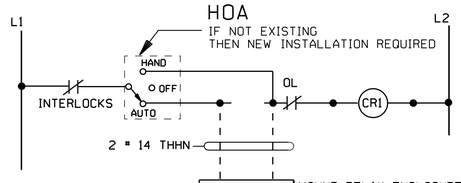

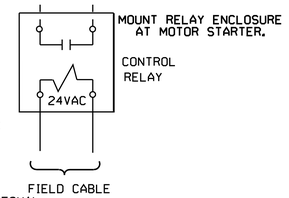

SPECIFICATION FOR RELAY "RE"

TYPE: SPDT MULTIVOLTAGE RELAY
CONTACT RATING: 10A @ 115VAC

COIL VOLTAGE: 24VAC/115VAC/230VAC

THIS RELAY SHALL BE KELE & ASSOCIATES MODEL MR-101C, GENERAL PURPOSE RELAY WITH ENCLOSURE OR EQUAL.
COIL VOLTAGE = 24 VAC

SPECIFICATION FOR HAND-OFF-AUTOMATIC SWITCH "HOA"

3 POSITION MAINTAINED KEY OPERATED SELECTOR SWITCH
SQUARE D, CLASS 9001, TYPE KS-43K10, SERIES H
CONTACT BLOCK=9001KA, KEY OPERATOR=9001KS, KEY#E-10

SENSOR CABLE	MUX PANEL

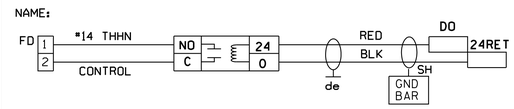

REDUCED SIZE DRAWING
DO NOT SCALE

CADD DRAWING
CHANGES TO THIS DRAWING SHALL BE MADE ON CADD ONLY.
477159 12-29-03 JEP
LATEST CADD UPDATE: 11-03-05 12:45 PM BY: SAMANIEGO

REV.	BY	DATE	REVISION	C.I. NO.	APPROVED
1	RTS	11-03-05	AS-BUILT	477159	JC 11-03-05

CONCURRENCE: AD21 PLANNING OFFICE — DATE:
CONCURRENCE: AD22 PROJECT MANAGER — DATE:
CONCURRENCE: JOE P. EDMONDSON, AD10 ENVIRONMENTAL ENGINEERING DEPT — DATE: 02-24-04
CONCURRENCE: USING OFFICE — DATE:
CONCURRENCE: JAMES K. SHARP, AD24 OPERATIONS & MAINTENANCE GROUP — DATE: 02-20-04
CONCURRENCE: SCOTT PINKSTON, AD60 ENVIRONMENTAL HEALTH — DATE: 02-20-04
CONCURRENCE: DENNIS S. DAVIS, OD50 SAFETY OFFICE — DATE: 02-24-04
CONCURRENCE: CHARLES B. WINKLER, AD32 COMMUNICATIONS OFFICE — DATE: 02-20-04
TELECOMMUNICATIONS EQUIPMENT AFFECTED BY THIS CONTRACT WORK IS NOT TO BE ALTERED OR REMOVED BY THE CONTRACTOR. CONTACT THE COTR IN THE EVENT OF A CONFLICT
REF. NO. UCS2 OF 4

Marshall Space Flight Center
Huntsville, Alabama 35812

WORK REQUEST NO. 477159

BUILDING 4619

TENSILE TEST LAB BUILDING ADDITION
UCS SKS

AE FIRM: AJT & ASSOCIATES, INC. HUNTSVILLE - ALABAMA
NASA AE CONTRACT NO. NAS8- 00144

SUBMITTED: DAVID A. SELLERS	APPROVAL RECOMMENDED: DAVID L. MARTIN	APPROVED: R. B. FELDER
AE: DATE: 01-21-04	AD22 PROJ. A/E DATE: 02-23-04	AD22 GROUP LEAD DATE: 02-26-04
DESIGNED: J PAGE	APPROVAL RECOMMENDED: ROBERT S. TALIANKO, AJT & ASSOCIATES, INC.	DRAWING NO. FAC-FF-4619-UCS2
DRAWN: J PAGE		
CHECKED: W HENDRIX	AD22 TEAM LEAD DATE: 02-26-04	
SCALE: AS NOTED	SPEC. NO. TSRC-5	SHEET 25 OF 27

MSFC-FORM 232 REV. 8-21-89-MCL

MSFC MASTER BID DISK 11-18-2013

TRTD1

SPECIFICATION SHEET
AIR DUCT TEMPERATURE TRANSMITTER

OUTPUT	4-20 MA OVER RANGE, LINEAR WITH TEMPERATURE
CALIBRATION ACCURACY	± 0.1% OF SPAN
ADJUSTMENTS	ZERO & SPAN ± 5% OF SPAN, FACTORY-SET
SUPPLY VOLTAGE	8.5 TO 35 VDC
DIMENSIONS	1.5"W X .875"H X 0.7"D
RANGE	-50°F TO 275°F
MODEL #	S456PEY(U)/TTIIIPDIAI

TRANSMITTER & RTD ARE AVAILABLE FROM MINCO PRODUCTS PH# 763-571-3123
TRANSMITTER IS TO BE USED WITH 100 OHM PLATINUM RTD SENSOR
MODEL # S456PEY(U) U=PROBE LENGTH IN INCHES
RTD SIZE SHALL BE 2/3 OF DUCT WIDTH
RIGID AVERAGING SENSOR

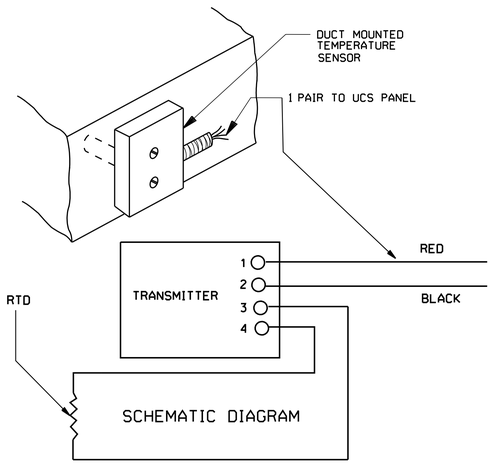

SCHEMATIC DIAGRAM

SENSOR CABLE	MUX PANEL

PFR1

POWER FAIL MONITOR RELAY

INSTALL DUPLEX OUTLET AND POWER FAIL RELAY
AT EACH MICROSCAN CPU OR MUX PANEL LOCATION

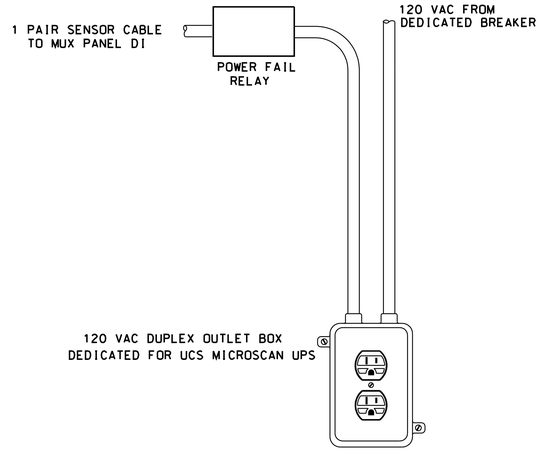

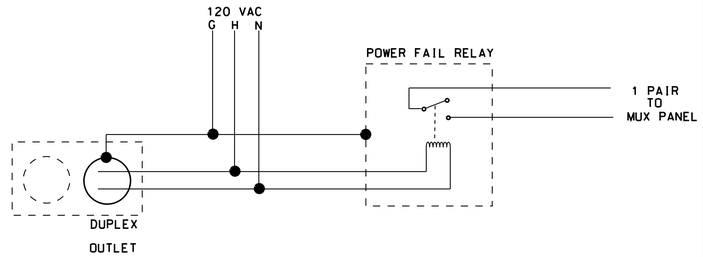

R1 - MULTI-VOLTAGE CONTROL RELAY MODEL MR101C. KELE & ASSOC. PH# 901-937-4900

SENSOR CABLE	MUX PANEL

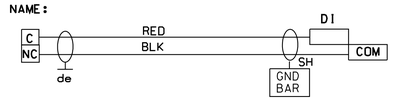

MS6

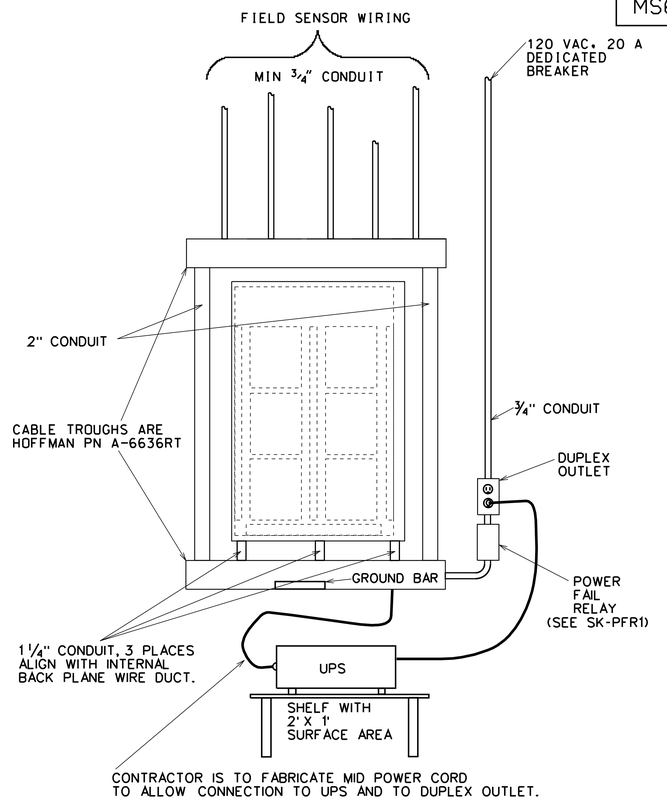

MICRO-SCAN 6 CARD MUX PANEL

THE NEW MICROSCAN PANEL SHALL CONSIST OF THE FOLLOWING ITEMS:

PART NUMBER	PART NAME	QTY REQ'D
401-A-635-8	MICROSCAN CONTROLLER ENCLOSURE W/ POWER SUPPLY	1
401-A-300-3R	MICROSCAN CONTROLLER CARD	PER DESIGN
A-6636RT	CABLE TROUGH, 6" x 6" x 36"	1

CABLE TROUGH IS AVAILABLE FORM HOFFMAN PH# 763-422-2211
MICRO-SCAN PRODUCTS ARE AVAILABLE FROM DORSETT'S INC. PH# 336-679-2126

REDUCED SIZE DRAWING
DO NOT SCALE

CADD DRAWING
CHANGES TO THIS DRAWING SHALL BE MADE ON CADD ONLY.
477159 12-29-03 JEP
LATEST CADD UPDATE: 11-03-05 12:50 PM
BY: SAMANIEGO

REV.	BY	DATE	REVISION	C.I. NO.	APPROVED
1	RTS	11-03-05	AS-BUILT	477159	JC 11-03-05

CONCURRENCE: AD21 PLANNING OFFICE — DATE:
CONCURRENCE: AD22 PROJECT MANAGER — DATE:
CONCURRENCE: JOE P. EDMONDSON, AD10 ENVIRONMENTAL ENGINEERING DEPT — DATE: 02-24-04
CONCURRENCE: USING OFFICE — DATE:
CONCURRENCE: JAMES K. SHARP, AD24 OPERATIONS & MAINTENANCE GROUP — DATE: 02-20-04
CONCURRENCE: SCOTT PINKSTON, AD60 ENVIRONMENTAL HEALTH — DATE: 02-20-04
CONCURRENCE: DENNIS S. DAVIS, OD50 SAFETY OFFICE — DATE: 02-24-04
CONCURRENCE: CHARLES B. WINKLER, AD32 COMMUNICATIONS OFFICE — DATE: 02-20-04
TELECOMMUNICATIONS EQUIPMENT AFFECTED BY THIS CONTRACT WORK IS NOT TO BE ALTERED OR REMOVED BY THE CONTRACTOR. CONTACT THE COTR IN THE EVENT OF A CONFLICT

REF. NO. UCS3 OF 4

Marshall Space Flight Center
Huntsville, Alabama 35812

WORK REQUEST NO. 477159

BUILDING 4619

TENSILE TEST LAB BUILDING ADDITION
UCS SKS

AE FIRM: AJT & ASSOCIATES, INC. HUNTSVILLE - ALABAMA			NASA AE CONTRACT NO. NAS8-00144
SUBMITTED: DAVID A. SELLERS	APPROVAL RECOMMENDED: DAVID L. MARTIN		APPROVED: R. B. FELDER
AE: DATE: 01-21-04	AD22 PROJ. A/E: DATE: 02-23-04	AD22 GROUP LEAD: DATE: 02-26-04	
DESIGNED: J PAGE	APPROVAL RECOMMENDED: ROBERT S. TALIANKO, AJT & ASSOCIATES, INC.		DRAWING NO. FAC-FF-4619-UCS3
DRAWN: J PAGE			
CHECKED: W HENDRIX	AD22 TEAM LEAD: DATE: 02-26-04		
SCALE: AS NOTED	SPEC. NO. TSRC-5		SHEET 26 OF 27

MSFC-FORM 252 REV. 8-21-91-RCL

MSFC MASTER BID DISK 11-18-2013

SPECIFICATION SHEET
BENDABLE AIR DUCT TEMPERATURE TRANSMITTER

TRTD5

OUTPUT	4-20 MA OVER RANGE, LINEAR WITH TEMPERATURE
CALIBRATION ACCURACY	± 0.1% OF SPAN
ADJUSTMENTS	ZERO & SPAN ± 5% OF SPAN, FACTORY-SET
SUPPLY VOLTAGE	8.5 TO 35 VDC
DIMENSIONS	1.5"W X .875"H X 0.7"D
RANGE	-50°F TO 275°F
MODEL *	S457PEY(U)/TT1I1PD1A1

TRANSMITTER & RTD ARE AVAILABLE FROM MINCO PRODUCTS PH* 763-571-3123
TRANSMITTER IS TO BE USED WITH 100 OHM PLATINUM RTD SENSOR
MODEL * S456PEY(U) U=PROBE LENGTH IN INCHES
RTD LENGTH SHALL BE SUFFICIENT TO FORM AT LEAST 4 DUCT-WIDTH PASSES
BENDABLE AVERAGING SENSOR, MINIMUM BEND RADIUS IS 4 INCHES

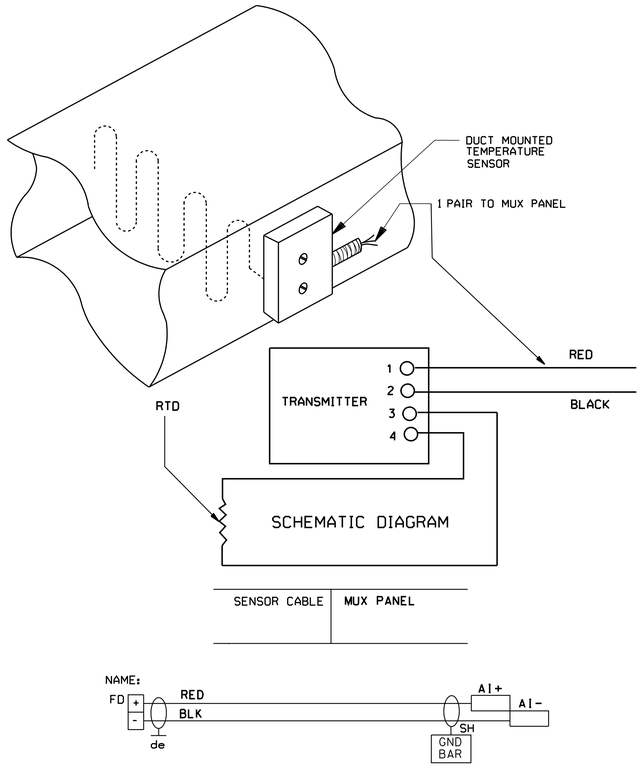

SPECIFICATION SHEET
RELATIVE HUMIDITY & TEMPERATURE TRANSMITTER

SPTRH3

WALL MOUNT RELITIVE HUMIDITY & TEMPERATURE TRANSMITTER

PERFORMANCE	ACCURACY AT 77° F (25°C):+/-3% RH AT 20-95% RH INCLUDING HYSTERESIS, LINEARITY & REPEATABILITY SENSITIVITY: 0.1% RH LONG TERM STABILITY: LESS THAN 1% DRIFT-PER YEAR, TYPICAL
OUTPUTS	CURRENT: 2-WIRE, ISOLATED LOOP POWERED, 4-20 mA, 0-100% LINEAR, PROPORTIONAL VOLTAGE: 0-5 VOLT, 0-100% RH
OPERATING RANGE	SENSOR: HUMIDITY: 0-99% RH, NON-CONDENSING TEMPERATURE: 32°F TO 122°F
POWER	SUPPLY VOLTAGE: 12 TO 36 VDC AT TRANSMITTER (28 VDC MAX FOR VOLTAGE OUTPUT TRANSMITTER) MAX LOAD SUPPLY-10 VDC / .02A (FOR CURRENT OUTPUTS UNITS ONLY)
MECHANICAL	CONNECTIONS: SCREW TERMINALS, 16-22 AWG(1.3 TO 0.6 mm) WEIGHT: SPACE. . . . . 9 OZ.(.25Kg.)
MODEL *	GENERAL EASTERN MRHT3-3-I-S-8

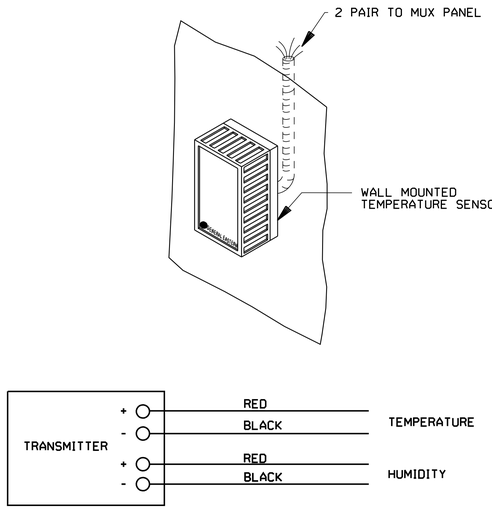

24 VAC POWER SOURCE W/ENCLOSURE
T-PB 202-1

PS1

SPECIFICATIONS

OUTPUT VOLTAGE	24 VAC
OUTPUT CURRENT	4.0A (CLASS1)
COVENIENCE OUTLET	115 VAC. 5.0A MAX
INPUT POWER	115 VAC. 60 HZ. 6.0A MAX
TEMPERATURE	-13 DEG TO 140 DEG F
ENCLOSURE DIMENSIONS	6.12"H X 5.187"W X 4.12"D
WEIGHT	5.85 LB MAX

POWER SUPPLY SHALL BE KELE & ASSOC PART NUMBER T-PB202-1. PH# 901-937-4900.

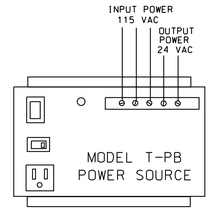

REDUCED SIZE DRAWING
DO NOT SCALE

CADD DRAWING
CHANGES TO THIS DRAWING SHALL BE MADE ON CADD ONLY.
477159 / 12-29-03 / JEP
LATEST CADD UPDATE: 11-03-05 12:55 PM
BY: SAMANIEGO

CONCURRENCE:	DATE:
AD21 PLANNING OFFICE	
AD22 PROJECT MANAGER	
JOE P. EDMONDSON, AD10 ENVIRONMENTAL ENGINEERING DEPT	02-24-04
USING OFFICE	
JAMES K. SHARP, AD24 OPERATIONS & MAINTENANCE GROUP	02-20-04
SCOTT PINKSTON, AD60 ENVIRONMENTAL HEALTH	02-20-04
DENNIS S. DAVIS, OD50 SAFETY OFFICE	02-24-04
CHARLES B. WINKLER, AD32 COMMUNICATIONS OFFICE	02-20-04

TELECOMMUNICATIONS EQUIPMENT AFFECTED BY THIS CONTRACT WORK IS NOT TO BE ALTERED OR REMOVED BY THE CONTRACTOR. CONTACT THE COTR IN THE EVENT OF A CONFLICT

REF. NO. UCS4 OF 4

REV.	BY	DATE	REVISION	C.I. NO.	APPROVED
1	RTS	11-03-05	AS-BUILT	JC 11-03-05	

Marshall Space Flight Center
Huntsville, Alabama 35812

WORK REQUEST NO. 477159

BUILDING 4619

TENSILE TEST LAB BUILDING ADDITION
UCS SKS

AE FIRM: AJT & ASSOCIATES, INC. HUNTSVILLE - ALABAMA		NASA AE CONTRACT NO. NAS8-00144
SUBMITTED: DAVID A. SELLERS	APPROVAL RECOMMENDED: DAVID L. MARTIN	APPROVED: R. B. FELDER
AE: DATE: 01-21-04	AD22 PROJ. A/E: DATE: 02-23-04	AD22 GROUP LEAD: DATE: 02-26-04
DESIGNED: J PAGE	APPROVAL RECOMMENDED: ROBERT S. TALIANKO AJT & ASSOCIATES, INC.	DRAWING NO. FAC-FF-4619-UCS4
DRAWN: J PAGE		
CHECKED: W HENDRIX	AD22 TEAM LEAD: DATE: 02-26-04	
SCALE: AS NOTED	SPEC. NO. TSRC-5	SHEET 27 OF 27

MSFC-FORM 232 REV. 8-21-89-MCL

MSFC MASTER BID DISK 11-18-2013

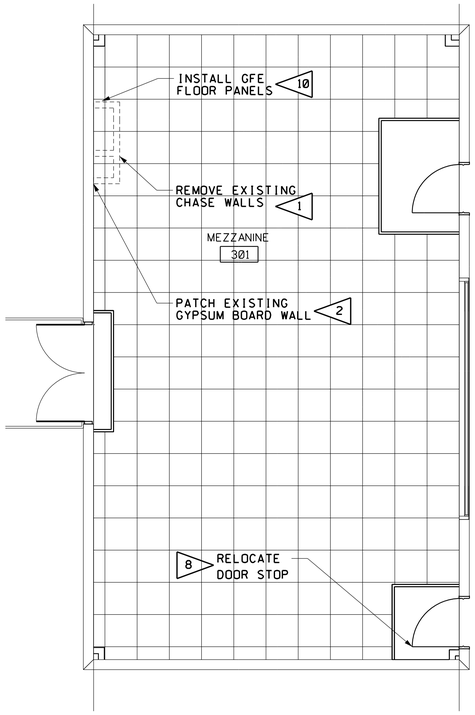

BUILDING 4619
FLOOR PLAN - ROOM 301
SCALE: 1/4" = 1'-0" 0 2' 4' 6'

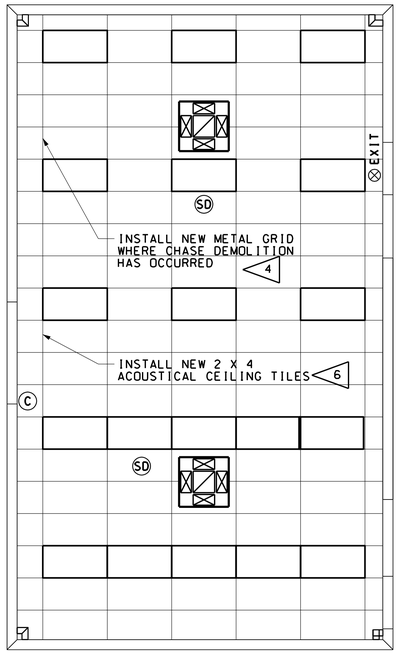

BUILDING 4619
REFLECTED CEILING PLAN - ROOM 301
SCALE: 1/4" = 1'-0" 0 2' 4' 6'

LEGEND

- EXISTING WALLS TO BE REMOVED
- RAISED FLOOR TILE
- 2 X 4 ACOUSTICAL CEILING TILE
- 2 X 4 FLUORESCENT LIGHTING FIXTURE
- (SD) EXISTING SMOKE DETECTOR
- (C) EXISTING CAMERA
- ⊗ EXIT EXISTING EMERGENCY EXIT
- NEW HVAC EQUIPMENT

GENERAL NOTES

A. VERIFY ALL DIMENSIONS AND CONDITIONS AT THE SITE PRIOR TO CONSTRUCTION. WORK DISCREPANCIES THROUGH THE COTR. PERFORM FIELD INVESTIGATIONS AS REQUIRED TO DETERMINE APPROPRIATE QUANTITIES OF MATERIALS PRIOR TO BIDDING.

B. REPAIR OR REPLACE ALL WORK DAMAGED IN CONSTRUCTION TO PRODUCE A COMPLETELY FINISHED JOB.

C. ALL MATERIAL IS SPECIFIED ON AN "APPROVED EQUAL" BASIS UNLESS NOTED OTHERWISE. APPROVAL SHALL BE BY THE COTR.

D. CLEAN, DRY AND ADEQUATELY PREPARE ALL SURFACES WHICH ARE TO BE PAINTED. REMOVE FOREIGN MATERIALS THAT WILL ADVERSELY AFFECT ADHESION OR APPEARANCE OF APPLIED COATING.

E. ALL MATERIAL SPECIFIED SHALL BE INSTALLED IN ACCORDANCE WITH THE MANUFACTURER'S WRITTEN INSTRUCTIONS UNLESS OTHERWISE SHOWN.

F. PAINT ALL NEW PAINTABLE SURFACES AND TOUCH UP SURFACES DAMAGED IN CONSTRUCTION. SUBMIT COLOR SAMPLES OF ALL FINISHED MATERIALS FOR SELECTION AND APPROVAL.

G. PROTECT EXISTING EQUIPMENT AND FURNISHINGS AT ALL TIMES DURING CONSTRUCTION BY SUITABLE COVERING OR OTHER METHOD DURING PROGRESS OF WORK.

H. CARE SHALL BE TAKEN TO AVOID DAMAGING EXISTING MATERIALS AND FINISHES. MATERIALS AND FINISHES DAMAGED DURING DEMOLITION AND CONSTRUCTION SHALL BE PATCHED AND REPAIRED TO MATCH UNDAMAGED ADJACENT FINISHES.

ARCHITECTURAL NOTES

1. REMOVE EXISTING GYPSUM BOARD AND METAL STUD CHASE WALLS IN ROOM 301 AS SHOWN ON PLAN. THIS SHEET.

2. REPAIR EXISTING WEST GYPSUM BOARD WALL WHERE CHASE DEMOLITION HAS OCCURRED. PATCH WALL AS REQUIRED WITH NEW GYPSUM BOARD. FILL, SAND, AND PREPARE FOR NEW PAINT.

3. REMOVE EXISTING CEILING TILE FROM ROOM 301. EXISTING CEILING GRID SHALL REMAIN FOR RE-USE.

4. INSTALL NEW SUSPENDED CEILING GRID WHERE CHASE DEMOLITION HAS OCCURRED. REPAIR GRID AREAS AS REQUIRED WHERE NEW MECHANICAL UNITS ARE INSTALLED TO PROVIDE A CONTINUOUS CEILING GRID. MATCH EXISTING GRID IN SIZE AND PROFILE.

5. EXISTING CEILING GRID IN ROOM 301 SHALL BE PAINTED WITH SHERWIN WILLIAMS COLOR: EXTRA WHITE #SW-7006, FLAT FINISH. ALL ITEMS INTERFERING WITH THE PAINTING OF THE GRID SHALL BE REMOVED PRIOR TO PAINTING.

6. INSTALL NEW 2' X 4' X 5/8" ACOUSTICAL CEILING TILE IN EXISTING CEILING GRID IN ROOM 301. NEW TILES SHALL BE MANUFACTURED BY ARMSTRONG, PATTERN: GEORGIAN, COLOR: WHITE.

7. REMOVE EXISTING WOOD BLOCKING AND AIR UNIT IN SOUTHEAST DOOR OPENING OF ROOM 301. SEE MECHANICAL SHEET FOR ADDITIONAL AIR UNIT INFORMATION.

8. RELOCATE EXISTING DOOR STOP FROM CURRENT POSITION OF HOLDING OPEN SOUTHEAST DOOR TO STANDARD POSITION BETWEEN DOOR AND EXISTING SOUTH WALL. MAKE EXISTING DOOR OPERABLE.

9. REMOVE EXISTING RUBBER BASE FROM ROOM 301 AND INSTALL NEW 4" RUBBER BASE. BASE SHALL BE MANUFACTURED BY MARLEY-FLEXCO, STYLE: WALLFLOWERS, COLOR: BARK #02.

10. INSTALL GFE RAISED FLOOR PANELS IN OPENING LEFT FROM CHASE REMOVAL. FLOOR PANELS SHALL BE MODIFIED TO FIT OPENING. PROVIDE HARDWARE AS REQUIRED.

ARCHITECTURAL NOTES (CONTINUED)

11. PENETRATIONS SHALL BE MADE IN EXISTING ASBESTOS SIDING TO ACCOMMODATE NEW UNISTRUT SUPPORTS AS DESCRIBED ON STRUCTURAL SHEET. CONTRACTOR SHALL FOLLOW PROPER PROCEDURES FOR ASBESTOS CONTAINMENT AS DESCRIBED IN TSRC-10 SPECIFICATIONS. HOLES AT EACH PENETRATION SHALL HAVE A 1/2" MAXIMUM GAP AROUND UNISTRUT AND BE FILLED WITH SEALANT. CONTRACTOR SHALL PROVIDE BACKING PLATES MATCHING SIDING PROFILE AT EACH PENETRATION ON INTERIOR SIDE. THE INDIVIDUALS MAKING THE PENETRATIONS IN TO THE TRANSITE SIDING WILL NEED TO HAVE ALABAMA SAFE STATE ACCREDITED CLASS III OPERATIONS AND MAINTENANCE ASBESTOS TRAINING, AND PROVIDE COPIES OF THIS TO THE SITE ASBESTOS COORDINATOR. WET METHODS MUST BE USED DURING THE DRILLING OR CUTTING, AND A HEPA VACUUM AND WET METHODS MUST BE USED DURING CLEAN-UP OF DEBRIS. PROMPT CLEAN-UP (WITHIN THE SHIFT) OF DEBRIS IS REQUIRED BY OSHA.

12. EXISTING INSULATION IN ADJACENT HIGH BAY SHALL BE DETACHED BY REMOVING APPROPRIATE FASTENERS TO ALLOW FOR INSTALLATION OF NEW UNISTRUT SUPPORTS AND ATTACHMENTS THROUGH WEST WALL OF HIGH BAY. RE-INSTALL INSULATION AND FASTEN TO MATCH EXISTING.

13. PAINT ALL WALLS, DOORS, AND TRIM IN ROOM 301. WALL PAINT SHALL BE SHERWIN WILLIAMS COLOR: AGREEABLE GRAY #SW-7029, SATIN FINISH. DOOR PAINT SHALL BE SHERWIN WILLIAMS COLOR: ANEW GRAY #SW-7030, SEMI-GLOSS FINISH. TRIM PAINT SHALL BE ICI/GLIDDEN COLOR: BURNT BARK #30YY 08/082, SEMI-GLOSS FINISH. PAINT BOTH SIDES OF DOORS AND FRAMES.

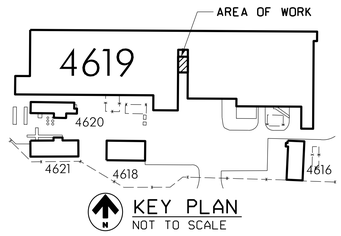

KEY PLAN
NOT TO SCALE

WARNING
DO NOT SCALE THIS DRAWING
THIS DRAWING WAS DESIGNED TO BE PRINTED AT A NASA SHEET SIZE: MSFC STD. SIZE 40" X 28"

CADD DRAWING
CHANGES TO THIS DRAWING SHALL BE MADE ON CADD ONLY.
3521804
07-08-13 SBG
LATEST CADD UPDATE: 08-26-13 03:00 PM BY: B. THOMPSON

CONCURRENCE:	DATE:
NORM D. HAWES	08-16-13
AS21 PLANNING OFFICE	
AS23 PROJECT MANAGER	
MIKE REYNOLDS, AS10 ENVIRONMENTAL ENGINEERING OFFICE	08-20-13
VICTOR DAVIS, USING OFFICE	08-26-13
MICHAEL BRADFORD, AS24 OPERATIONS & MAINTENANCE GROUP	08-22-13
TODD SPRINGER, AS10 ENVIRONMENTAL HEALTH	08-22-13
JASON R. SCOTT, QD50 SAFETY OFFICE	08-22-13
ROGER BROWN, JS40 COMMUNICATIONS OFFICE	08-16-13

TELECOMMUNICATIONS EQUIPMENT AFFECTED BY THIS CONTRACT WORK IS NOT TO BE ALTERED OR REMOVED BY THE CONTRACTOR. CONTACT THE COTR IN THE EVENT OF A CONFLICT

REF. NO. A1 OF 1

REV.	BY	DATE	REVISION	C.J. NO.	APPROVED

Marshall Space Flight Center
Huntsville, Alabama 35812

WORK REQUEST NO. 3521804

BUILDING 4619
PROVIDE HVAC SYSTEM FOR ROOM 301
ARCHITECTURAL PLANS AND NOTES

AE FIRM: KAYA Associates, Inc.
NASA AE CONTRACT NO. NNM11AA39C

SUBMITTED: JUERGEN HAUKOHL	APPROVAL RECOMMENDED: CHAD BERTHELSON		APPROVED: DENNIS L. NORRIS
AE: DATE: 08-12-13	AS22 PROJ. A/E DATE: 08-22-13	AS22 GROUP LEAD	DATE: 08-26-13
DESIGNED: S. GARRETT	APPROVAL RECOMMENDED: DAVID A. SELLERS, KAYA Associates, Inc.		DRAWING NO.
DRAWN: S. GARRETT			FAC-GS-4619-A1
CHECKED: R. O. BARTON	AS22 TEAM LEAD DATE: 08-26-13		SHEET 1 OF 7
SCALE: AS NOTED	SPEC. NO. TSRC-10		

MSFC-FORM 232 REV. 8-21-89-RCL

MSFC MASTER BID DISK 11-18-2013

N:*AcceptedForConstruction*4619*gs-3521804*a1.dgn

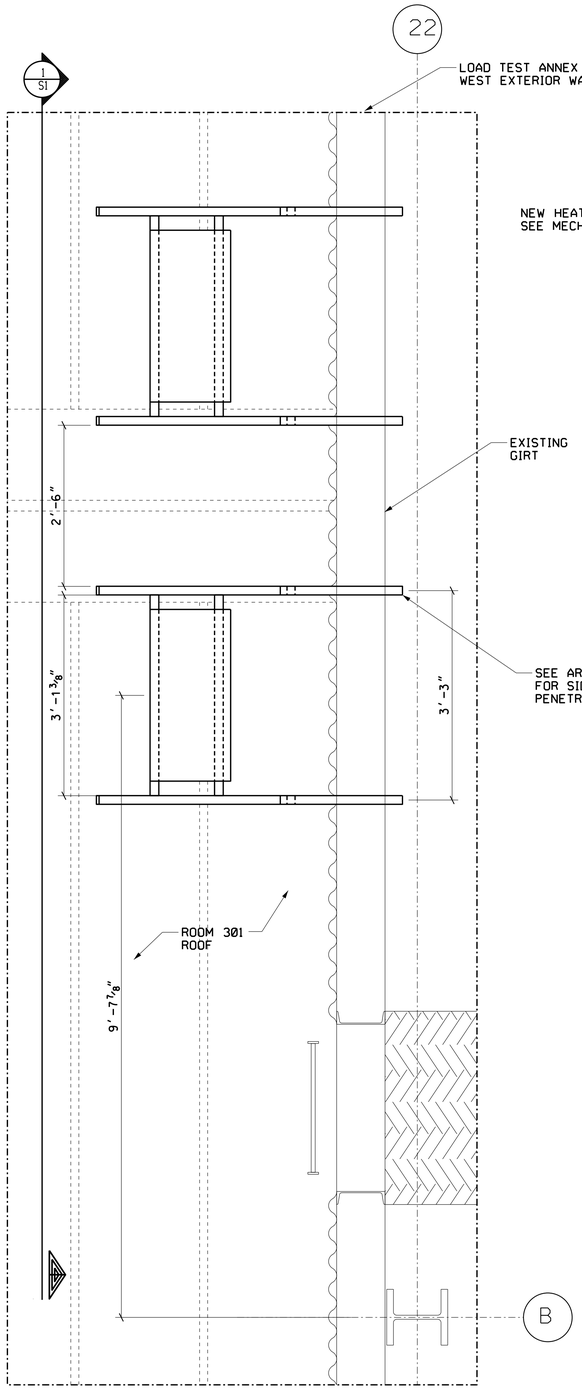

BUILDING 4619
PARTIAL ROOF PLAN
SCALE: 1" = 1'-0"

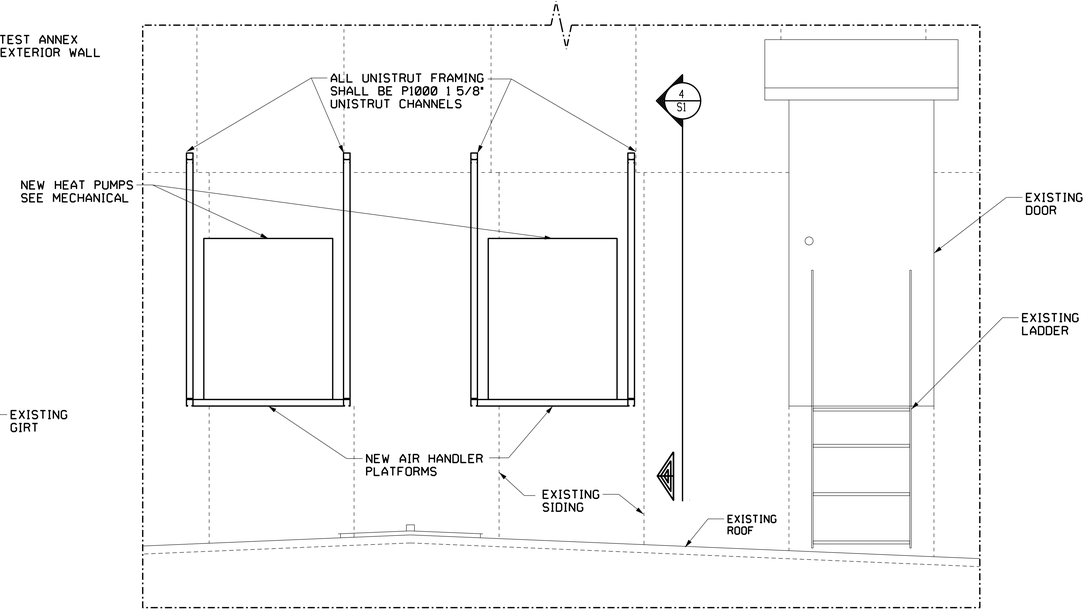

1 S1 WEST ELEVATION VIEW
SCALE: 3/4" = 1'-0"

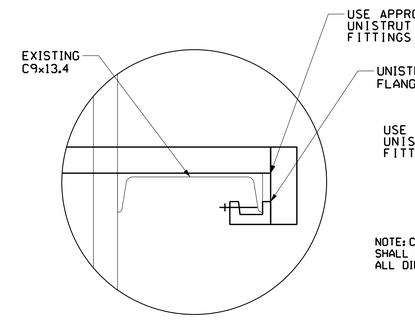

2 S1 GIRT CONNECTION DETAIL (TYP)
SCALE: 3" = 1'-0"

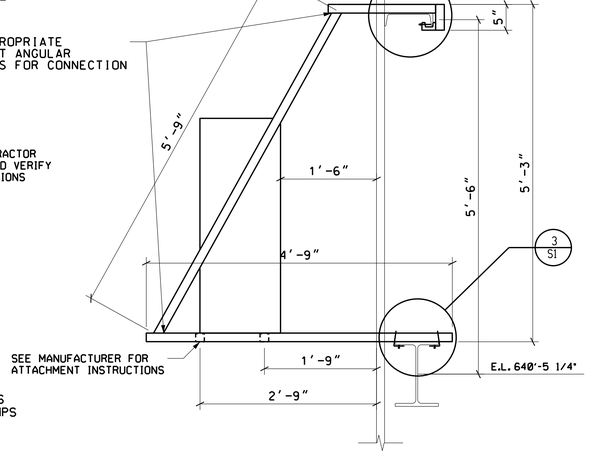

4 S1 HEAT PUMP SUPPORT FRAME SECTION VIEW (TYP)
SCALE: 1" = 1'-0"

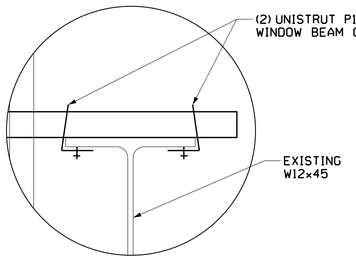

3 S1 BEAM CONNECTION DETAIL (TYP)
SCALE: 3" = 1'-0"

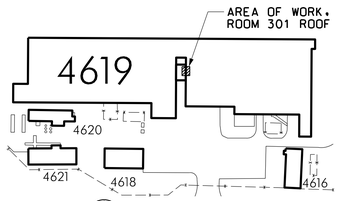

KEY PLAN
NOT TO SCALE

STRUCTURAL NOTES

DIVISION 1 - GENERAL

1.1 PRIOR TO BEGINNING ANY WORK, THE CONTRACTOR SHALL VISIT THE WORK SITE TO FAMILIARIZE HIMSELF WITH THE FIELD CONDITIONS PRESENT IN AND AROUND THE WORK AREA, AND TO VERIFY FIELD AND REFERENCE DIMENSIONS. WHEN DISCREPANCIES EXIST BETWEEN THE CONTRACT DOCUMENTS AND THE OBSERVED SITE CONDITIONS, HE SHALL IMMEDIATELY CONTACT THE CONTRACTING OFFICER'S TECHNICAL REPRESENTATIVE (COTR) AND CONFIRM THE PROPER COURSE OF ACTION, BEFORE PROCEEDING FURTHER.

1.2 DETAILS AND SECTIONS SHOWN ON THE DRAWINGS ARE TYPICAL, AND SHALL APPLY TO SIMILAR SITUATIONS THROUGHOUT THE ENTIRE PROJECT, UNLESS NOTED OTHERWISE.

DIVISION 5 - METALS

5.1 ALL CHANNEL FRAMING SHALL BE P1000 1 5/8" 12 GA STEEL UNISTRUT CHANNELS, AVAILABLE FROM WWW.UNISTRUT.US. PH: 800-937-8788 OR APPROVED EQUAL.

5.2 EXCEPT WHERE NOTED OTHERWISE, BEFORE BEGINNING ANY FABRICATION WORK, THE CONTRACTOR SHALL SUBMIT TO THE COTR FOR PRIOR APPROVAL, A COMPLETE SET OF STEEL FABRICATION AND ERECTION DRAWINGS FOR NEW STRUCTURES AND/OR STRUCTURAL MODIFICATIONS AND ADDITIONS. REPRODUCIBLE ELECTRONIC DRAWING FILES OF STRUCTURAL DRAWINGS WILL NOT BE PROVIDED TO THE CONTRACTOR, OR ANY OF HIS AGENTS.

DIVISION 9 - FINISHES

9.1 ALL NON-GALVANIZED EXTERIOR STEEL SHALL BE PRIME COATED AND FINISH COATED PER TSRC-10, SECTION 09 90 00-3.05.D.

9.2 THE DEFAULT FINISH COLOR FOR STRUCTURAL STEEL IS "STRUCTURAL GRAY"

WARNING
DO NOT SCALE THIS DRAWING
THIS DRAWING WAS DESIGNED TO BE PRINTED AT A NASA SHEET SIZE: MSFC STD. SIZE 40" X 28"

CADD DRAWING
CHANGES TO THIS DRAWING SHALL BE MADE ON CADD ONLY.
3521804 08-06-13 CWC
LATEST CADD UPDATE: 08-26-13 03:00 PM BY: B. THOMPSON

CONCURRENCE:	DATE:
CONCURRENCE:	DATE: 08-16-13
NORM D. HAWES	
CONCURRENCE:	DATE:
AS21 PLANNING OFFICE	
CONCURRENCE:	DATE:
AS23 PROJECT MANAGER	
CONCURRENCE:	DATE: 08-20-13
MIKE REYNOLDS	
AS10 ENVIRONMENTAL ENGINEERING OFFICE	
CONCURRENCE:	DATE: 08-26-13
VICTOR DAVIS	
USING OFFICE	
CONCURRENCE:	DATE: 08-22-13
MICHAEL BRADFORD	
AS24 OPERATIONS & MAINTENANCE GROUP	
CONCURRENCE:	DATE: 08-22-13
TODD SPRINGER	
AS10 ENVIRONMENTAL HEALTH	
CONCURRENCE:	DATE: 08-22-13
JASON R. SCOTT	
OD50 SAFETY OFFICE	
CONCURRENCE:	DATE: 08-16-13
ROGER BROWN	
IS40 COMMUNICATIONS OFFICE	
TELECOMMUNICATIONS EQUIPMENT AFFECTED BY THIS CONTRACT WORK IS NOT TO BE ALTERED OR REMOVED BY THE CONTRACTOR. CONTACT THE COTR IN THE EVENT OF A CONFLICT	
REF. NO. S1	OF 1

REV.	BY	DATE	REVISION	C.I. NO.	APPROVED

Marshall Space Flight Center
Huntsville, Alabama 35812

WORK REQUEST NO. 3521804

BUILDING 4619

PROVIDE HVAC SYSTEM FOR ROOM 301

STRUCTURAL PLATFORM PLAN, SECTIONS, DETAILS AND NOTES

AE FIRM: KAYA Associates, Inc.		NASA AE CONTRACT NO: NNM11AA39C
SUBMITTED: JUERGEN HAUKOHL	APPROVAL RECOMMENDED: CHAD BERTHELSON	APPROVED: DENNIS L. NORRIS
AE: DATE: 08-12-13	AS22 PROJ. A/E DATE: 08-22-13	AS22 GROUP LEAD DATE: 08-26-13
DESIGNED: C. CAMEALY	APPROVAL RECOMMENDED: DAVID A. SELLERS KAYA Associates,Inc.	DRAWING NO. FAC-GS-4619-S1
DRAWN: C. CAMEALY		
CHECKED: R. WHITE	AS22 TEAM LEAD DATE: 08-26-13	
SCALE: AS NOTED	SPEC. NO. TSRC-10	SHEET 2 OF 7

MSFC-FORM 232 REV. 8-21-89-RCL

MSFC MASTER BID DISK 11-18-2013

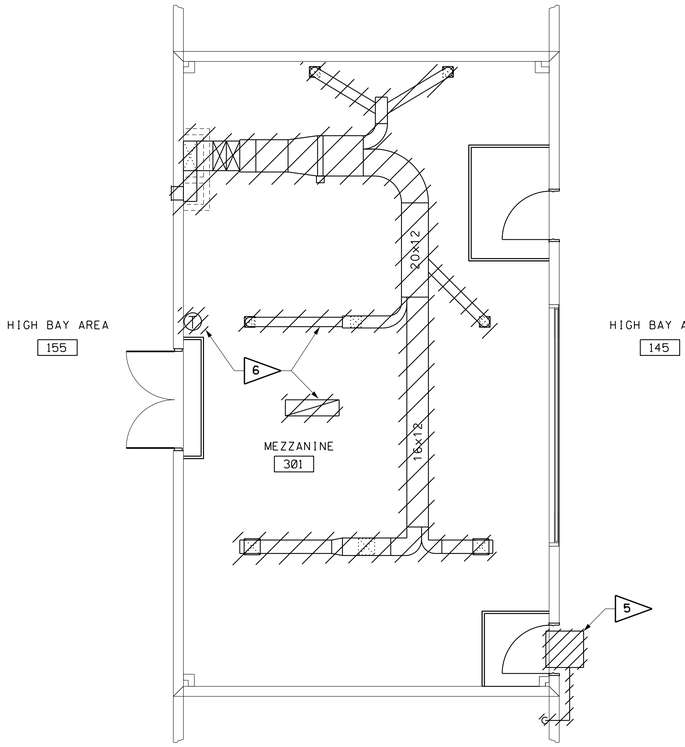

MECHANICAL DEMOLITION PLAN
SCALE: 1/4" = 1'-0" 0 2' 4' 6'

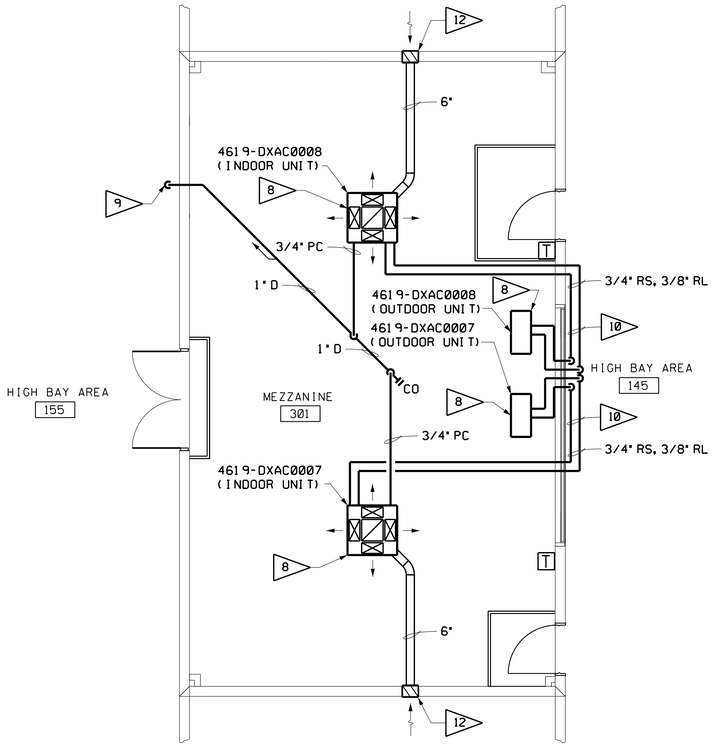

MECHANICAL INSTALLATION PLAN
SCALE: 1/4" = 1'-0" 0 2' 4' 6'

MECHANICAL NOTES

1. ALL ITEMS ARE SPECIFIED ON AN "OR APPROVED EQUAL" BASIS. EQUIPMENT TYPE NUMBERS REFER TO THOSE DEFINED IN SPECIFICATION TSRC-10 AND CONTRACT DRAWINGS. PROVIDE SUBMITTALS FOR APPROVAL PER SPECIFICATION SECTION 01 33 00 AND THE SCHEDULE OF SUBMITTALS. WAIVERS MUST BE REQUESTED IN WRITING.
2. VERIFY ALL FIELD CONDITIONS, ELEVATIONS, AND DIMENSIONS BEFORE BEGINNING FABRICATION AND INSTALLATION. WORK DISCREPANCIES THROUGH THE CONTRACTING OFFICER'S TECHNICAL REPRESENTATIVE (COTR).
3. EXERCISE CARE DURING THE WORK TO PREVENT DAMAGE TO EXISTING FINISHES, FURNISHINGS AND EQUIPMENT.
4. MATERIAL AND EQUIPMENT REMOVED SHALL BE DISPOSED OF AS DIRECTED BY THE CONTRACTING OFFICER'S TECHNICAL REPRESENTATIVE (COTR).
5. REMOVE 32 MBH WINDOW AIR CONDITIONING UNIT AND ASSOCIATED CONDENSATE DRAIN PIPING. PATCH ABANDONED CONDENSATE DRAIN PIPING PENETRATION AT EXTERIOR WALL.
6. DEMOLISH EXISTING ABANDONED DUCTWORK, SPACE THERMOSTAT AND ASSOCIATED CONTROL WIRING. PATCH PENETRATIONS AT ALL SURFACES TO MATCH ADJACENT SURFACES.
7. PROVIDE CEILING CASSETTE DUCTLESS SPLIT SYSTEMS PER DXAC SCHEDULE.
8. MOUNT AIR HANDLERS IN THE CEILING GRID (SEE REFLECTED CEILING PLAN FOR EXACT MOUNTING LOCATIONS). MOUNT HEAT PUMPS ABOVE ROOF ON 4TH LEVEL WEST WALL (EXTERIOR SIDE) OF ROOM 145 (SEE STRUCTURAL DRAWINGS FOR EXACT MOUNTING LOCATIONS). SECURELY BOLT HEAT PUMPS TO STRUCTURAL SUPPORT STEEL (SEE STRUCTURAL DRAWINGS FOR DETAILS). INSTALL EQUIPMENT PER MANUFACTURER'S WRITTEN INSTALLATION INSTRUCTIONS.
9. PROVIDE TYPE L HARD DRAWN COPPER CONDENSATE DRAIN PIPING PER SPECIFICATION 23 21 13. TERMINATE CONDENSATE LINE AT FLOOR DRAIN ADJACENT TO HIGH BAY DOOR IN ROOM 155. APPROXIMATE RISER HEIGHT IS 80 FT.
10. PROVIDE TYPE L HARD DRAWN COPPER REFRIGERANT SUCTION PIPING AND TYPE K COPPER TUBING REFRIGERANT LIQUID PIPING PER SPECIFICATION 23 23 00. PERFORM LEAK TEST ON INSTALLED REFRIGERANT SYSTEM.
11. INSULATE ALL PIPING PER SPECIFICATION 23 07 19. SUPPORT ALL PIPING PER SPECIFICATION 23 05 29. LABEL ALL PIPING PER SPECIFICATION 23 05 53. INSULATE ALL OUTSIDE AIR DUCTWORK PER SPECIFICATION 23 07 13.
12. PROVIDE 12" X 12" WALL LOUVER TYPE WL-1 PER SPECIFICATION 23 37 00. COLOR TO BE SELECTED BY ARCHITECT.

LEGEND

———	EXISTING
//////	DEMO
———	NEW
D	CONDENSATE DRAIN PIPING
RS	REFRIGERANT SUCTION PIPING
RL	REFRIGERANT LIQUID PIPING
PC	PUMPED CONDENSATE PIPING
	DIRECTION OF PIPE SLOPE
	LOUVER
CO	CLEAN OUT
T	SPACE THERMOSTAT

DXAC SCHEDULE

UNIT			FAN		ELECTRICAL		COOLING COIL		HEATING COIL		EQUAL TO	
							DX COOLING		HEAT PUMP	ELEC SUPP		
MARK	LOCATION	SERVES	TOTAL FLOW RATE (CFM)	OUTSIDE AIR (CFM)	VOLTS	PHASE	TOTAL (BTUH)	SENS (BTUH)	TOTAL (BTUH)	TOTAL (KW)	MANUF	MODEL
4619-DXAC0007	301	301	700	50	208	1	24.0	17.6	20.4	3.0	EMI	CAHG24D3
4619-DXAC0008	301	301	700	50	208	1	24.0	17.6	20.4	3.0	EMI	CAHG24D3

NOTES:

1. PROVIDE WITH HEAT PUMP UNIT EMI MODEL# S1HG4000D10.
2. PROVIDE WITH VICONICS "SMART" THERMOSTAT WITH OCCUPANCY SENSOR.
3. PROVIDE LOW AMBIENT COOLING KIT WITH OPERATION TO 0 F AND INTEGRAL CONDENSATE PUMP.

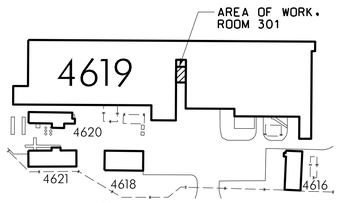

KEY PLAN
NOT TO SCALE

WARNING
DO NOT SCALE THIS DRAWING
THIS DRAWING WAS DESIGNED TO BE PRINTED AT A NASA SHEET SIZE: MSFC STD. SIZE 40" X 28"

CADD DRAWING
CHANGES TO THIS DRAWING SHALL BE MADE ON CADD ONLY.
3521804 — LATEST CADD UPDATE: 08-26-13
07-08-13 — BY: B. THOMPSON 03:00 PM
GAB

CONCURRENCE: DATE:
CONCURRENCE: DATE: 08-16-13
NORM D. HAWES
CONCURRENCE: DATE:
AS21 PLANNING OFFICE
CONCURRENCE: DATE:
AS23 PROJECT MANAGER
CONCURRENCE: DATE: 08-20-13
MIKE REYNOLDS
AS10 ENVIRONMENTAL ENGINEERING OFFICE
CONCURRENCE: DATE: 08-26-13
VICTOR DAVIS
US90 OFFICE
CONCURRENCE: DATE: 08-22-13
MICHAEL BRADFORD
AS24 OPERATIONS & MAINTENANCE GROUP
CONCURRENCE: DATE: 08-22-13
TODD SPRINGER
AS10 ENVIRONMENTAL HEALTH
CONCURRENCE: DATE: 08-22-13
JASON R. SCOTT
OD50 SAFETY OFFICE
CONCURRENCE: DATE: 08-16-13
ROGER BROWN
IS40 COMMUNICATIONS OFFICE
TELECOMMUNICATIONS EQUIPMENT AFFECTED BY THIS CONTRACT WORK IS NOT TO BE ALTERED OR REMOVED BY THE CONTRACTOR. CONTACT THE COTR IN THE EVENT OF A CONFLICT

REF. NO. M1 OF 2

REV.	BY	DATE	REVISION	C.I. NO.	APPROVED

Marshall Space Flight Center
Huntsville, Alabama 35812

WORK REQUEST NO. 3521804

BUILDING 4619

PROVIDE HVAC SYSTEM FOR ROOM 301
MECHANICAL PLANS, LEGEND, SCHEDULE, & NOTES

AE FIRM: KAYA Associates, Inc.
NASA AE CONTRACT NO. NNM11AA39C

SUBMITTED:	APPROVAL RECOMMENDED:	APPROVED:
JUERGEN HAUKOHL	CHAD BERTHELSON	DENNIS L. NORRIS
AE: DATE: 08-12-13	AS22 PROJ. A/E DATE: 08-22-13	AS22 GROUP LEAD DATE: 08-26-13
DESIGNED: B. LUCAS	APPROVAL RECOMMENDED: DAVID A. SELLERS, KAYA Associates, Inc.	DRAWING NO.
DRAWN: G. BATCHELOR		FAC-GS-4619-M1
CHECKED: W. LANDERS	AS22 TEAM LEAD DATE: 08-26-13	SHEET 3 OF 7
SCALE: AS NOTED	SPEC. NO. TSRC-10	

MSFC-FORM 232 REV. 8-21-89-MOD.

MSFC MASTER BID DISK 11-18-2013

N:*AcceptedForConstruction*4619*gs-3521804*m1.dgn

CONSTANT VOLUME SINGLE ZONE HEAT PUMP
4619-DXAC0007 AND 4619-DXAC0008 SEQUENCE OF OPERATION

1. THE HEAT PUMP UNIT WILL BE REMOTELY STARTED, STOPPED AND CONTROLLED BY THE UCS SYSTEM. UCS WILL CONTROL THE HEAT PUMP THROUGH A "SMART" THERMOSTAT AND BACNET CONTROLLER THROUGH A MS-TP NETWORK INTERFACE.

2. SPACE TEMPERATURE CONTROL
IN COOLING MODE THE THERMOSTAT SHALL STAGE AND CYCLE COMPRESSOR(S) TO MEET THE DEMAND AS BASED ON THE OFFSET ERROR ON THE THERMOSTAT. IN HEATING MODE THE REFRIGERANT REVERSING VALVE SHALL SWITCH AND THE THERMOSTAT SHALL STAGE AND CYCLE THE COMPRESSOR(S) TO MEET THE DEMAND AS BASED ON THE OFFSET ERROR. IF ALL STAGES OF DX HEATING ARE ON AND THE SETPOINT CANNOT BE MAINTAINED THE CONTROLLER SHALL TURN ON AND STAGE/CYCLE THE SUPPLEMENTAL ELECTRIC HEATING COILS AS NECESSARY TO MEET THE DEMAND.

3. SHUT DOWN
IF A SHUT DOWN SEQUENCE IS INITIATED THE SUPPLY FAN, COMPRESSOR(S) AND ELECTRIC HEATING COIL(S) SHALL TURN OFF.

4. DISPLAYS
THE FOLLOWING CONTROL POINTS SHALL BE DISPLAYED ON THE AIR HANDLER DISPLAY AT UCS CONTROL: COOLING OR HEATING MODE, AUXILIARY HEATING STAGE ON, SPACE TEMPERATURE, SPACE TEMPERATURE SETPOINT AND OCCUPIED/UNOCCUPIED MODE.

5. UNOCCUPIED/OCCUPIED MODE
OCCUPANCY SHALL BE DETERMINED USING THE OCCUPANCY SENSOR IN THE "SMART" THERMOSTAT. OCCUPIED MODE SHALL LATCH FOR 90 MIN (ADJ) BEFORE REVERTING BACK TO UNOCCUPIED MODE. DURING THE UNOCCUPIED MODE THE SPACE TEMPERATURE SETPOINT SHALL BE 85 F (ADJ) IF THE OAT IS 60 F (ADJ) OR ABOVE AND SHALL BE 40 F (ADJ) IF THE OAT IS BELOW 60 F (ADJ). DURING UNOCCUPIED MODE THE SUPPLY FAN SHALL CYCLE ON UPON A NEED FOR HEATING OR COOLING. DURING OCCUPIED MODE THE SPACE TEMPERATURE SETPOINT SHALL BE 75 F (ADJ) IF THE OAT IS 60 F (ADJ) OR ABOVE AND SHALL BE 70 F (ADJ) IF THE OAT IS BELOW 60 F (ADJ). THE SUPPLY FAN SHALL BE ON.

6. SYSTEM INTERLOCK
4619-DXAC0007 AND 4619-DXAC0008 SHALL BE INTERLOCKED TO OPERATE IN THE SAME MODES. IF OCCUPANCY IS SENSED BY EITHER "SMART" THERMOSTAT, THEN BOTH SYSTEMS SHALL BE INDEXED TO OCCUPIED MODE. UPON A CALL FOR COOLING OR HEATING BY EITHER SYSTEM, THEN BOTH SYSTEMS SHALL BE INDEXED TO MAINTAIN SPACE TEMPERATURE. SIMULTANEOUS HEATING AND COOLING IS NOT PERMITTED AND A CALL FOR COOLING SHALL TAKE PRECEDENCE OVER A CALL FOR HEATING.

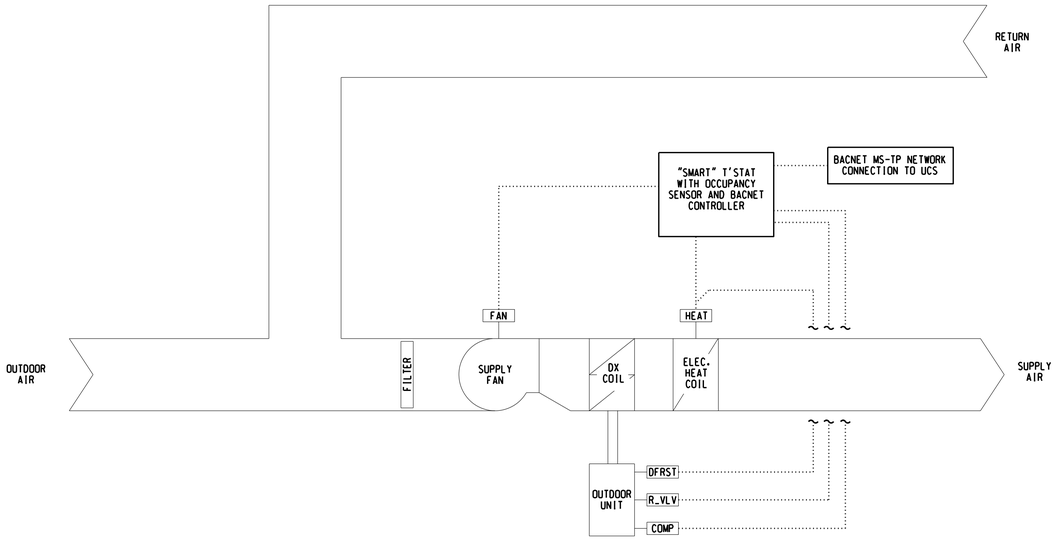

CONSTANT VOLUME SINGLE ZONE HEAT PUMP
4619-DXAC0007 AND 4619-DXAC0008 CONTROL DIAGRAM

WARNING
DO NOT SCALE THIS DRAWING
THIS DRAWING WAS DESIGNED TO BE PRINTED AT A NASA SHEET SIZE: MSFC STD. SIZE 40" X 28"

CADD DRAWING
CHANGES TO THIS DRAWING SHALL BE MADE ON CADD ONLY.
3521804 07-17-13 BJJ
LATEST CADD UPDATE: 08-26-13 03:00 PM BY: B. THOMPSON

CONCURRENCE:	DATE:
CONCURRENCE: NORM D. HAWES	DATE: 08-16-13
CONCURRENCE: AS21 PLANNING OFFICE	DATE:
CONCURRENCE: AS23 PROJECT MANAGER	DATE:
CONCURRENCE: MIKE REYNOLDS AS10 ENVIRONMENTAL ENGINEERING OFFICE	DATE: 08-20-13
CONCURRENCE: VICTOR DAVIS USING OFFICE	DATE: 08-26-13
CONCURRENCE: MICHAEL BRADFORD AS24 OPERATIONS & MAINTENANCE GROUP	DATE: 08-22-13
CONCURRENCE: TODD SPRINGER AS10 ENVIRONMENTAL HEALTH	DATE: 08-22-13
CONCURRENCE: JASON R. SCOTT QD50 SAFETY OFFICE	DATE: 08-22-13
CONCURRENCE: ROGER BROWN IS40 COMMUNICATIONS OFFICE TELECOMMUNICATIONS EQUIPMENT AFFECTED BY THIS CONTRACT WORK IS NOT TO BE ALTERED OR REMOVED BY THE CONTRACTOR. CONTACT THE COTR IN THE EVENT OF A CONFLICT	DATE: 08-16-13
REF. NO. M2	OF 2

REV.	BY	DATE	REVISION	C.I. NO.	APPROVED

Marshall Space Flight Center
Huntsville, Alabama 35812

WORK REQUEST NO. 3521804

BUILDING 4619

PROVIDE HVAC SYSTEM FOR ROOM 301
SEQUENCE OF OPERATION AND CONTROL DIAGRAMS

AE FIRM: KAYA Associates, Inc.		NASA AE CONTRACT NO. NNM11AA39C
SUBMITTED: JUERGEN HAUKOHL	APPROVAL RECOMMENDED: CHAD BERTHELSON	APPROVED: DENNIS L. NORRIS
AE: DATE: 08-12-13	AS22 PROJ. A/E DATE: 08-22-13	AS22 GROUP LEAD DATE: 08-26-13
DESIGNED: B. LUCAS	APPROVAL RECOMMENDED: DAVID A. SELLERS KAYA Associates, Inc.	DRAWING NO. FAC-GS-4619-M2
DRAWN: B. JANSEN	AS22 TEAM LEAD DATE: 08-26-13	
CHECKED: W. LANDERS		
SCALE: AS NOTED	SPEC. NO. TSRC-10	SHEET 4 OF 7

MSFC-FORM 232 REV. 8-21-89-RCL

MSFC MASTER BID DISK 11-18-2013

N:*AcceptedForConstruction*4619*gs-3521804*m2.dgn

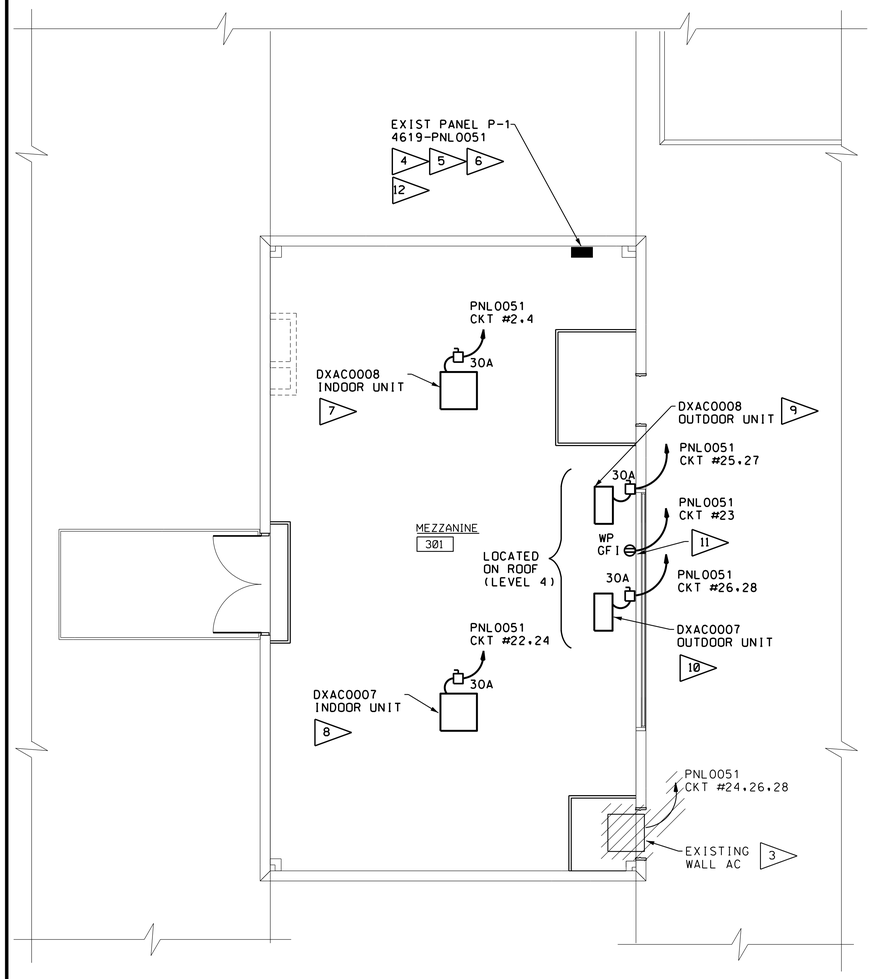

BUILDING 4619
POWER FLOOR PLAN
SCALE: 1/4" = 1'-0" 0 2' 4' 6'

PANEL	4619-PNL0051	VOLTAGE	208Y/120V
LOCATION	MEZZANINE 301	PHASE	3
MOUNTING	SURFACE	WIRE	4
MFR. CATALOG NO.	GE NLAB	AMPS	225A
MAIN BKR	225A	AIC RATING	225A
MAIN FEEDER SIZE	--	FED FROM	4619-SS0015

CKT	PH	FRAME & AMPS	LOAD DESCRIPTION	CKT	PH	FRAME & AMPS	LOAD DESCRIPTION
1	A	1P/20A	REC. CATWALK	2	A	2P/15A	DXAC0008 INDOOR
3	B	1P/20A	LIGHTS RM 301	4	B	↓	↓
5	C	1P/20A	LIGHTS RM 301	6	C	1P/20A	RELOCATED CKT 22 TO CKT 6
7	A	1P/20A	EM LGT & REC. RM 301	8	A	1P/20A	REC. RM 301
9	B	1P/20A	REC. RM 301	10	B	1P/20A	REC. RM 301
11	C	1P/20A	REC. RM 301 U/F	12	C	1P/20A	REC. RM 301 U/F
13	A	1P/20A	REC. RM 301	14	A	1P/30A	REC. RM 301 U/F
15	B	1P/20A	REC. RM 301	16	B	1P/20A	REC. RM 301 U/F
17	C	1P/20A	REC. AT CATWALK	18	C	1P/20A	REC. RM 301 U/F
19	A	1P/20A	REC. RM 301	20	A	1P/20A	REC. RM 301 U/F
21	B	1P/20A	REC. RM 301	22	B	2P/15A	DXAC0007 INDOOR
23	C	1P/20A	WP GFI DUPLEX @ ROOF	24	C	↓	↓
25	A	2P/20A	DXAC0008 OUTDOOR	26	A	2P/20A	DXAC0007 OUTDOOR
27	B	↓	↓	28	B	↓	↓
29	C	SPACE	SPACE	30	C	SPACE	SPACE

ELECTRICAL NOTES

1. ALL WORK SHALL CONFORM TO THE REQUIREMENTS OF THE 2011 NEC AND TSRC-10 AS MINIMUM STANDARDS.
2. ALL ITEMS ARE SPECIFIED ON AN "OR APPROVED" EQUAL BASIS UNLESS OTHERWISE NOTED. EQUIPMENT NUMBERS REFER TO THOSE DEFINED IN SPECIFICATION TSRC-10 AND CONTRACT DRAWINGS. PROVIDE SUBMITTALS FOR APPROVAL PER SPECIFICATION SECTION 01 33 00 AND THE SCHEDULE OF SUBMITTALS.

3. REMOVE ELECTRICAL FEED TO THE WINDOW AIR CONDITIONING UNIT, WIRED WITH 8/3 SO CORD BENEATH RAISED FLOOR TO PANEL 4619-PNL0051.

4. RELOCATE RECEPTACLE CIRCUIT LOCATED IN POSITION 22, OF 4619-PNL0051, TO SPARE 20 AMP 1 POLE CIRCUIT BREAKER IN POSITION 6.

5. REMOVE CIRCUIT BREAKER FROM POSITION 2, 4, 24, 26, 28, 25 AND 27.

6. PROVIDE (1) 15 AMP 2 POLE HACR CIRCUIT BREAKER IN POSITION 2/4, (1) 15 AMP 2 POLE HACR CIRCUIT BREAKER IN POSITION 22/24, (1) 20 AMP 2 POLE HACR CIRCUIT BREAKER IN POSITION 25/27 AND (1) 20 AMP 2 POLE HACR CIRCUIT BREAKER IN POSITION 26/28. CIRCUIT BREAKERS ARE GE TYPE THOB.

7. PROVIDE 2 #12 AWG AND 1 #12 AWG GND IN 3/4" CONDUIT TO DXAC0008 INDOOR UNIT. PROVIDE A 30 AMP 2 POLE, NON-FUSED, HEAVY DUTY, NEMA 1 ENCLOSED SAFETY SWITCH EQUAL TO SIEMENS HFN261. SECURE TO BUILDING STRUCTURE ADJACENT TO UNIT. FINAL CONNECTION TO UNIT SHALL BE LIQUIDTIGHT FLEXIBLE METAL CONDUIT. PROVIDE LABEL ON SAFETY SWITCH IDENTIFYING MAXIMO NUMBER (4619-SS0309), POWER SOURCE, CIRCUIT NUMBER AND VOLTAGE.

8. PROVIDE 2 #12 AWG AND 1 #12 AWG GND IN 3/4" CONDUIT TO DXAC0007 INDOOR UNIT. PROVIDE A 30 AMP 2 POLE, NON-FUSED, HEAVY DUTY, NEMA 1 ENCLOSED SAFETY SWITCH EQUAL TO SIEMENS HFN261. SECURE TO BUILDING STRUCTURE ADJACENT TO UNIT. FINAL CONNECTION TO UNIT SHALL BE LIQUIDTIGHT FLEXIBLE METAL CONDUIT. PROVIDE LABEL ON SAFETY SWITCH IDENTIFYING MAXIMO NUMBER (4619-SS0311), POWER SOURCE, CIRCUIT NUMBER AND VOLTAGE.

9. PROVIDE 2 #12 AWG AND 1 #12 AWG GND IN 3/4" CONDUIT TO DXAC0008 OUTDOOR UNIT. PROVIDE A 30 AMP 2 POLE, NON-FUSED, HEAVY DUTY, NEMA 3R ENCLOSED SAFETY SWITCH EQUAL TO SIEMENS HFN261R. SECURE TO BUILDING STRUCTURE ADJACENT TO UNIT. FINAL CONNECTION TO UNIT SHALL BE LIQUIDTIGHT FLEXIBLE METAL CONDUIT. SEAL CONDUIT PRIOR TO ENTERING THE BUILDING AND PROVIDE NECESSARY WEATHER TIGHT PENETRATION THROUGH THE SIDING. PROVIDE LABEL ON SAFETY SWITCH IDENTIFYING MAXIMO NUMBER (4619-SS0310), POWER SOURCE, CIRCUIT NUMBER AND VOLTAGE.

10. PROVIDE 2 #12 AWG AND 1 #12 AWG GND IN 3/4" CONDUIT TO DXAC0007 OUTDOOR UNIT. PROVIDE A 30 AMP 2 POLE, NON-FUSED, HEAVY DUTY, NEMA 3R ENCLOSED SAFETY SWITCH EQUAL TO SIEMENS HFN261R. SECURE TO BUILDING STRUCTURE ADJACENT TO UNIT. FINAL CONNECTION TO UNIT SHALL BE LIQUIDTIGHT FLEXIBLE METAL CONDUIT. SEAL CONDUIT PRIOR TO ENTERING THE BUILDING AND PROVIDE NECESSARY WEATHER TIGHT PENETRATION THROUGH THE SIDING. PROVIDE LABEL ON SAFETY SWITCH IDENTIFYING MAXIMO NUMBER (4619-SS0312), POWER SOURCE, CIRCUIT NUMBER AND VOLTAGE.

11. PROVIDE A WEATHERPROOF GFI DUPLEX RECEPTACLE AT ROOF LEVEL ADJACENT TO NEW HEAT PUMPS FOR SERVICE USE. PROVIDE 2 #12 THHN AND 1 #12 GND IN 3/4" CONDUIT TO 4619-PNL0051, CIRCUIT 23. SEAL CONDUIT PRIOR TO ENTERING THE BUILDING AND PROVIDE NECESSARY WEATHER TIGHT PENETRATION THROUGH THE SIDING. PROVIDE LABEL IDENTIFYING PANEL AND CIRCUIT NUMBER.

12. PROVIDE NEW TYPE WRITTEN PANEL DIRECTORY FOR 4619-PNL0051, REFLECTING CHANGES MADE.

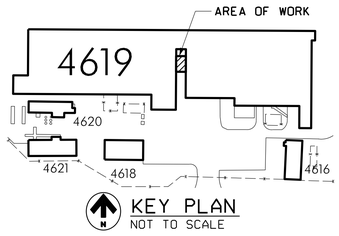

KEY PLAN
NOT TO SCALE

WARNING
DO NOT SCALE THIS DRAWING
THIS DRAWING WAS DESIGNED TO BE PRINTED AT A NASA SHEET SIZE: MSFC STD. SIZE 40" X 28"

CADD DRAWING
CHANGES TO THIS DRAWING SHALL BE MADE ON CADD ONLY.
3521804 07-08-13
LATEST CADD UPDATE: 08-26-13 03:00 PM BY: B. THOMPSON

CONCURRENCE: DATE:
CONCURRENCE: DATE: 08-16-13 NORM D. HAWES
CONCURRENCE: DATE: AS21 PLANNING OFFICE
CONCURRENCE: DATE: AS23 PROJECT MANAGER
CONCURRENCE: DATE: 08-20-13 MIKE REYNOLDS AS10 ENVIRONMENTAL ENGINEERING OFFICE
CONCURRENCE: DATE: 08-26-13 VICTOR DAVIS USING OFFICE
CONCURRENCE: DATE: 08-22-13 MICHAEL BRADFORD AS24 OPERATIONS & MAINTENANCE GROUP
CONCURRENCE: DATE: 08-22-13 TODD SPRINGER AS10 ENVIRONMENTAL HEALTH
CONCURRENCE: DATE: 08-22-13 JASON R. SCOTT 0050 SAFETY OFFICE
CONCURRENCE: DATE: 08-16-13 ROGER BROWN IS40 COMMUNICATIONS OFFICE
TELECOMMUNICATIONS EQUIPMENT AFFECTED BY THIS CONTRACT WORK IS NOT TO BE ALTERED OR REMOVED BY THE CONTRACTOR. CONTACT THE COTR IN THE EVENT OF A CONFLICT.
REF. NO. E1 OF 1

REV.	BY	DATE	REVISION	C.I. NO.	APPROVED

Marshall Space Flight Center
Huntsville, Alabama 35812

WORK REQUEST NO. 3521804

BUILDING 4619

PROVIDE HVAC SYSTEM FOR ROOM 301

ELECTRICAL FLOOR PLAN, PANEL SCHEDULE AND NOTES

AE FIRM: KAYA Associates, Inc.			NASA AE CONTRACT NO. NNM11AA39C
SUBMITTED: JUERGEN HAUKOHL	APPROVAL RECOMMENDED: CHAD BERTHELSON		APPROVED: DENNIS L. NORRIS
AE: DATE: 08-12-13	AS22 PROJ. A/E DATE: 08-22-13		AS22 GROUP LEAD DATE: 08-26-13
DESIGNED: S. WASILEFSKY	APPROVAL RECOMMENDED: DAVID A. SELLERS KAYA Associates,Inc.		DRAWING NO.
DRAWN: J. FLETCHER			FAC-GS-4619-E1
CHECKED: M. DEY	AS22 TEAM LEAD DATE: 08-26-13		SHEET 5 OF 7
SCALE: AS NOTED	SPEC. NO. TSRC-10		

MSFC-FORM 232 REV. 8-21-89-RCL

MSFC MASTER BID DISK 11-18-2013

AcceptedForConstruction*4619*gs-3521804*e1.dgn

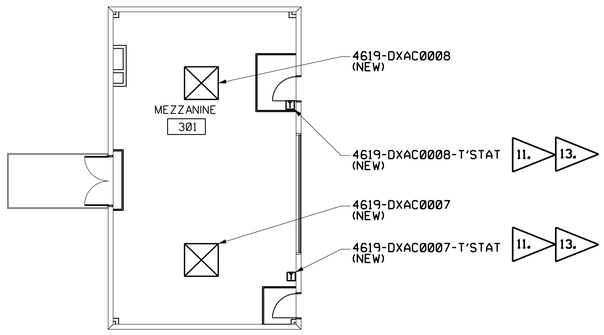

4619 MEZZANINE 3RD FLOOR PLAN
SCALE: 1/16" = 1'-0"
0 4' 8' 12' 16' 20' 24'

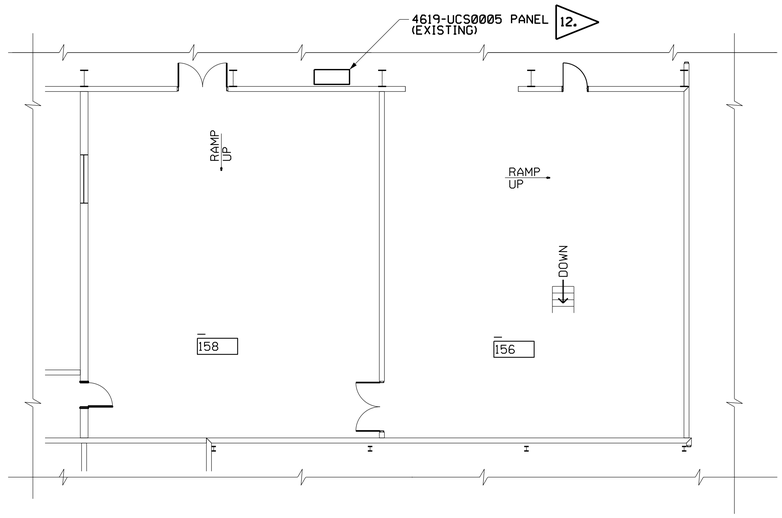

4619 PARTIAL FIRST FLOOR
SCALE: 1/16" = 1'-0"
0 4' 8' 12' 16' 20' 24'

UCS NOTES:

1. ALL ELECTRICAL WORK SHALL COMPLY WITH 2011 NATIONAL ELECTRICAL CODE AND SPEC. NO. TSRC-10 AS MINIMUM STANDARDS. ITEMS SPECIFIED BY BRAND NAME AND PART NUMBER SHALL NOT BE SUBSTITUTED SO THAT CONTINUOUS SYSTEM COMPATIBILITY IS ASSURED.
2. SENSOR CABLE SHALL BE 2 OR 4 CONDUCTOR AS SHOWN, COPPER, POLYMER ALLOY INSULATED, TWISTED PAIRS, PLENUM RATED, EACH PAIR HAVING A 24 AWG STRANDED DRAIN WIRE.
   1 PAIR COLOR CODE: BLACK/RED 22 GA. (7X30) WEST PENN WIRE PART # 25291B, OR APPROVED EQUAL.
   2 PAIR COLOR CODE: BLACK/RED WHITE/GREEN 22 GA. (7X30) WEST PENN WIRE PART # 25510B, OR APPROVED EQUAL. PH# 1-800-245-4964.
3. DATA CABLE SHALL BE 2 CONDUCTOR, COPPER, FOAM TEFLON INSULATION, TWISTED PAIR, PLENUM RATED, PAIR COLOR CODE: WHITE/BLUE 24AWG (7 X 32) WITH STRANDED DRAIN WIRE. WEST PENN PART # D254851, PH# 800-245-4964 OR BELDEN PART # 82841, PH# 800-235-3361 OR APPROVED EQUAL.
4. CONTRACTOR SHALL FURNISH ALL PARTS NECESSARY FOR A COMPLETE INSTALLATION.
5. MICROSCAN PRODUCTS ARE AVAILABLE FROM DORSETT TECHNOLOGIES INC. PH # 336-679-2126.
6. CONDUIT PENETRATIONS AT THE UCS PANELS SHALL BE IN THE BOTTOM.
7. A MAXIMUM OF 5 SHIELD/DRAIN WIRES SHALL BE TERMINATED AT EACH GROUND BAR POSITION. SHIELD/DRAIN WIRES ARE NOT TO EXTEND IN TO THE I/O PANEL.
8. ALL NEW INSTALLATION EFFORTS SHALL INCLUDE ITEMS SPECIFIED, NEW CONDUIT AND NEW UCS WIRING.
9. UPON COMPLETION OF ALL UCS RELATED WORK, A POINT TO POINT CHECKOUT SHALL BE CONDUCTED JOINTLY BY UCS PERSONNEL AND THE CONTRACTOR.
10. THE CONTRACTOR SHALL PROVIDE PROGRAMMING OF THE NEW UCS MONITORING POINTS TO THE INFOSCAN DATABASE TO ENABLE A COMPLETELY OPERATIONAL SYSTEM.

11. ADD TWO SMART T'STATS, SK TSL, WITH OCCUPANCY SENSOR, TO NEW DX UNITS 4619-DXAC0007 AND DXAC0008.
12. PROVIDE AND INSTALL (1) ONE MS5 I/O CARD, AT POSITION 4 TO THE EXISTING PANEL, 4619-UCS0005, LOCATED IN HIGH-BAY AREA OUTSIDE ROOM 158.
13. CONTRACTOR SHALL DAISY-CHAIN DXAC0007 AND DXAC0008 T'STATS WITH UCS DATA CABLE TO PANEL 4619-UCS0005. SEE NOTE 3.

TS1

COMMUNICATING DIGITAL THERMOSTAT WITH BACNET MS/TP AND OCCUPANCY SENSOR

TECHNICAL DATA

POWER REQUIREMENTS: 19-30 VAC (SUPPLIED BY THE UNITARY EQUIPMENT)
OPERATING CONDITIONS: 32° TO 122°F, 0% TO 95% RH
TEMPERATURE SENSOR: LOCAL 10 K NTC THERMISTOR
RESOLUTION: ±0.2°F
CONTROL ACCURACY:
- TEMPERATURE: ±0.9°F AT 70°F (TYPICAL CALIBRATED)
- HUMIDITY: ±5% RH FROM 20 TO 0% AT 50° TO 90°F

SETPOINT COOLING RANGE: 54° TO 100°F
SETPOINT HEATING RANGE: 40° TO 90°F
TEMPERATURE DISPLAY: -40° TO 122°F
PROPORTIONAL BAND FOR ROOM TEMPERATURE RANGE CONTROL: 3.2°F
BINARY INPUTS: DRY CONTACT
OUTPUT RATINGS:
- TRIAC OUTPUT: 30 VAC, 1A MAX, 3A INRUSH
- ANALOG: 0 TO 10 VDC INTO 2K OHM MIN.
- ECONOMIZER ANALOG OUTPUT ACCURACY: ±3% TYPICAL

FEATURES

PI TIME PROPORTIONING ALGORITHM	FREEZE PROTECTION
2 DIGITAL INPUTS	LOCKABLE KEYPAD
EEPROM MEMORY	6 HOUR RESERVE TIME FOR CLOCK
AUXILIARY OUTPUT	BACKLIT LCD DISPLAY
SMART FAN	VI-PIR FACTORY INSTALLED PASSIVE INFARED MOTION DETECTOR

NOTE: THIS ASSEMBLY SHALL BE A PRODUCT OF VICONICS ELECTRONICS INC. VT7600 SERIES OR OEM EQUIVALENT.

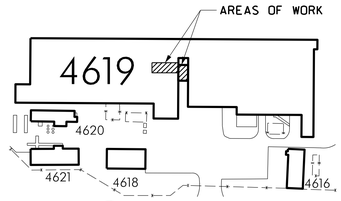

KEY PLAN
NOT TO SCALE

WARNING
DO NOT SCALE THIS DRAWING
THIS DRAWING WAS DESIGNED TO BE PRINTED AT A NASA SHEET SIZE: MSFC STD. SIZE 40" X 28"

CADD DRAWING
CHANGES TO THIS DRAWING SHALL BE MADE ON CADD ONLY.
3521804 07-17-13 EWO
LATEST CADD UPDATE: 08-26-13 03:00 PM
BY: B. THOMPSON

CONCURRENCE:	DATE:
NORM D. HAWES	08-16-13
AS21 PLANNING OFFICE	
AS23 PROJECT MANAGER	
MIKE REYNOLDS, ASI0 ENVIRONMENTAL ENGINEERING OFFICE	08-20-13
VICTOR DAVIS, USING OFFICE	08-26-13
MICHAEL BRADFORD, AS24 OPERATIONS & MAINTENANCE GROUP	08-22-13
TODD SPRINGER, ASI0 ENVIRONMENTAL HEALTH	08-22-13
JASON R. SCOTT, 0050 SAFETY OFFICE	08-22-13
ROGER BROWN, IS40 COMMUNICATIONS OFFICE	08-16-13

IS40 COMMUNICATIONS OFFICE TELECOMMUNICATIONS EQUIPMENT AFFECTED BY THIS CONTRACT WORK IS NOT TO BE ALTERED OR REMOVED BY THE CONTRACTOR. CONTACT THE CO19 IN THE EVENT OF A CONFLICT.

REV.	BY	DATE	REVISION	C.N. NO.	APPROVED

Marshall Space Flight Center
Huntsville, Alabama 35812

WORK REQUEST NO. 3521804

BUILDING 4619
PROVIDE HVAC SYSTEM FOR ROOM 301
UCS FLOOR PLAN, NOTES AND SK

AE FIRM: KAYA Associates, Inc.
NASA AE CONTRACT NO. NNM11AA39C

SUBMITTED:	APPROVAL RECOMMENDED:	APPROVED:
JUERGEN HAUKOHL	CHAD BERTHELSON	DENNIS L. NORRIS
AE: DATE: 08-12-13	AS22 PROJ. A/E DATE: 08-22-13	AS22 GROUP LEAD DATE: 08-26-13
DESIGNED: W. OWEN	APPROVAL RECOMMENDED: DAVID A. SELLERS, KAYA Associates, Inc.	DRAWING NO. FAC-GS-4619-UCS1
DRAWN: W. OWEN	AS22 TEAM LEAD DATE: 08-26-13	
CHECKED: J. PAGE		
SCALE: AS NOTED	SPEC. NO. TSRC-10	SHEET 6 OF 7

REF. NO. UCS1 OF 2

MSFC-FORM 232 REV. 8-21-89-RCL

MSFC MASTER BID DISK 11-18-2013

:*AcceptedForConstruction*4619*gs-3521804*ucs1.dgn

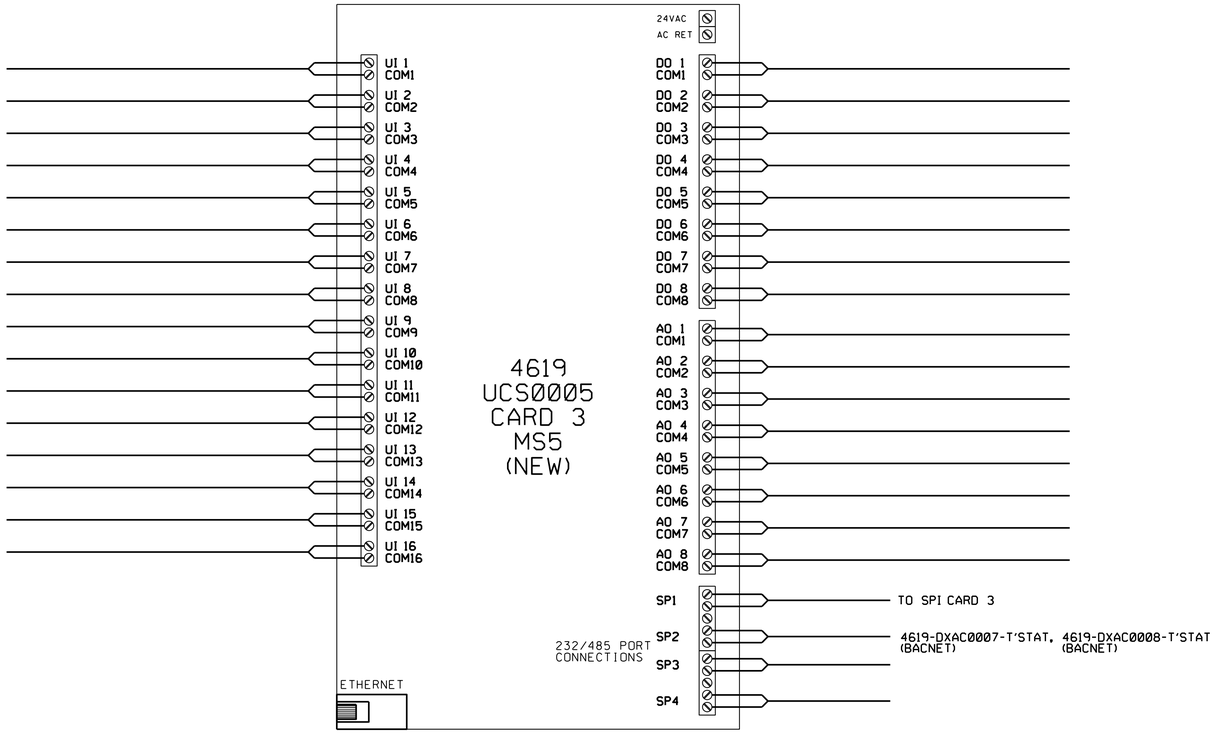

UCS COMM TRUNK LAYOUT

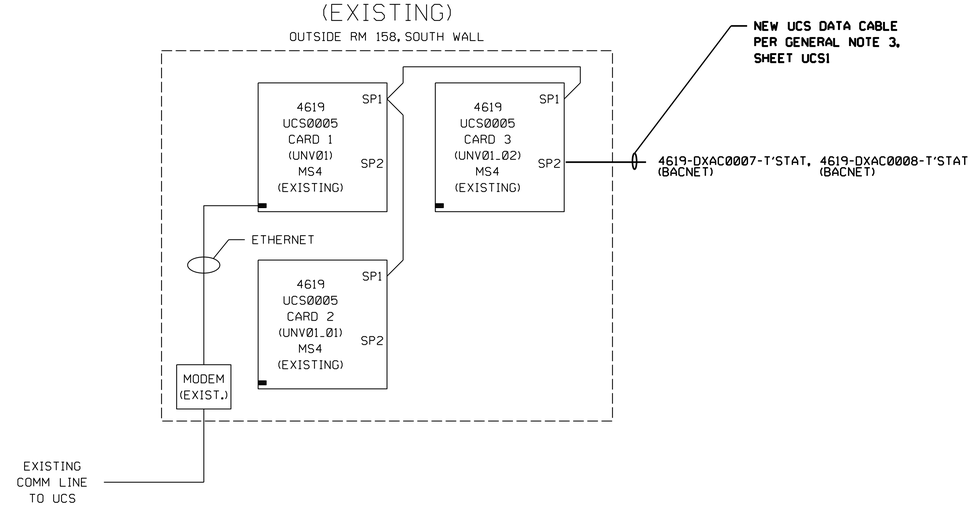

STATIC PRESSURE PROBE

SPP1

TECHNICAL DATA

MATERIAL: 6061T-6 ALUMINUM ALLOY
PORT CONNECTION: 1/4" BRASS HOSE BARB
GASKET MATERIAL: NEOPRENE
MAXIMUM PRESSURE: 10 PSIG
MAXIMUM TEMPERATURE: 482°F
MAXIMUM AIRFLOW: UNLIMITED
PROBE LENGTH: 8"

INSTALLATION:
DRILL 1/4" HOLE IN SHEET METAL AND INSERT PROBE. USING SUPPLIED TEMPLATE TO PROPERLY POSITION PROBE. MARK AND DRILL TWO FLANGE MOUNTING SCREW HOLES. SECURE PROBE USING TWO SELF-TAPPING SHEET METAL SCREWS.

NOTE: THIS DEVICE SHALL BE A MAMAC SYSTEMS P/N A-520-2-A-1
PH# 800-843-5116

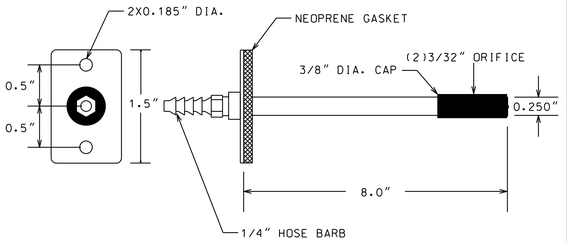

WARNING
DO NOT SCALE THIS DRAWING
THIS DRAWING WAS DESIGNED TO BE PRINTED AT A NASA SHEET SIZE: MSFC STD. SIZE 40" X 28"

CADD DRAWING
CHANGES TO THIS DRAWING SHALL BE MADE ON CADD ONLY.
3521804
07-17-13
EWO
LATEST CADD UPDATE: 08-26-13 03:00 PM
BY: B. THOMPSON

CONCURRENCE:	DATE:
CONCURRENCE:	DATE: 08-16-13
NORM D. HAWES	
CONCURRENCE:	DATE:
AS21 PLANNING OFFICE	
CONCURRENCE:	DATE:
AS23 PROJECT MANAGER	
CONCURRENCE:	DATE: 08-20-13
MIKE REYNOLDS AS10 ENVIRONMENTAL ENGINEERING OFFICE	
CONCURRENCE:	DATE: 08-26-13
VICTOR DAVIS US9NG OFFICE	
CONCURRENCE:	DATE: 08-22-13
MICHAEL BRADFORD AS24 OPERATIONS & MAINTENANCE GROUP	
CONCURRENCE:	DATE: 08-22-13
TODD SPRINGER AS10 ENVIRONMENTAL HEALTH	
CONCURRENCE:	DATE: 08-22-13
JASON R. SCOTT QD50 SAFETY OFFICE	
CONCURRENCE:	DATE: 08-16-13
ROGER BROWN JS40 COMMUNICATIONS OFFICE TELECOMMUNICATIONS EQUIPMENT AFFECTED BY THIS CONTRACT WORK IS NOT TO BE ALTERED OR REMOVED BY THE CONTRACTOR. CONTACT THE COTR IN THE EVENT OF A CONFLICT	

REV.	BY	DATE	REVISION	C.I. NO.	APPROVED

Marshall Space Flight Center
Huntsville, Alabama 35812

WORK REQUEST NO. 3521804

BUILDING 4619

PROVIDE HVAC SYSTEM FOR ROOM 301

UCS WIRING, COMM TRUNK LAYOUT AND SK'S

AE FIRM: KAYA Associates, Inc.
NASA AE CONTRACT NO.: NNM11AA39C

SUBMITTED: JUERGEN HAUKOHL	APPROVAL RECOMMENDED: CHAD BERTHELSON		APPROVED: DENNIS L. NORRIS
AE: DATE: 08-12-13	AS22 PROJ. A/E	DATE: 08-22-13	AS22 GROUP LEAD DATE: 08-26-13
DESIGNED: W. OWEN DRAWN: W. OWEN CHECKED: J. PAGE	APPROVAL RECOMMENDED: DAVID A. SELLERS, KAYA Associates, Inc.		DRAWING NO. FAC-GS-4619-UCS2
SCALE: AS NOTED	AS22 TEAM LEAD	DATE: 08-26-13	SHEET 7 OF 7
	SPEC. NO. TSRC-10		

REF. NO. UCS2 OF 2

MSFC-FORM 232 REV.8-21-89-RCL

MSFC MASTER BID DISK 11-18-2013

:*AcceptedForConstruction*4619*gs-3521804*ucs2.dgn