REVISIONS				
ZONE	SYM	DESCRIPTION	DATE	APPROVAL

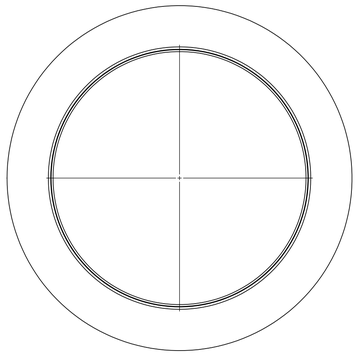

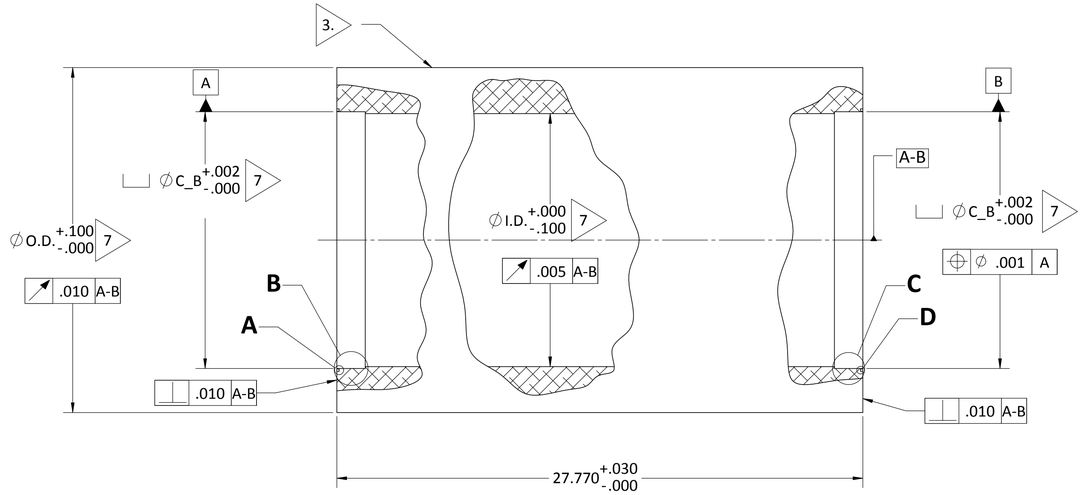

NOTES:

1. INTERPRET DRAWING PER ASME Y14.5M-1994.
2. MATERIAL: 6061-T6511 AL ALLOY EXTRUDED ROUND BAR &EXTRUDED SEAMLESS TUBING PER SAE AMS-QQ-A-200/8 & AMS 4173.
3. SURFACE ROUGHNESS: 125 MICROINCHES RMS.
4. REMOVE ALL BURRS AND SHARP EDGES.
5. ALL RADIUS .030 MAX, UNLESS OTHERWISE SPECIFIED.
6. IDENTIFICATION OF PART NUMBER WITH PERMANENT MARKER OR INK STAMP,APPROXIMATLY AS SHOWN.
7. SEE TABLE FOR DIMENSIONS AND WEIGHTS

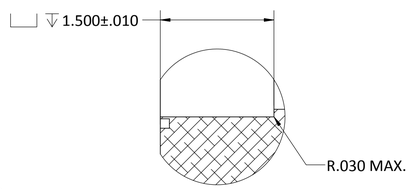

DETAIL B
SCALE 1 : 1

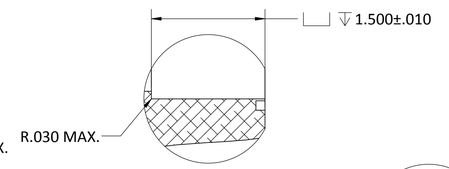

DETAIL C
SCALE 1 : 1

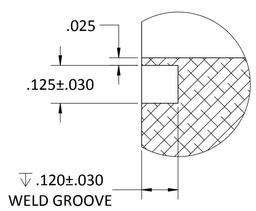

DETAIL A
SCALE 4 : 1

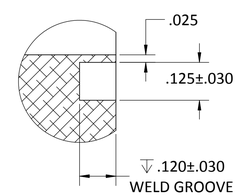

DETAIL D
SCALE 4 : 1

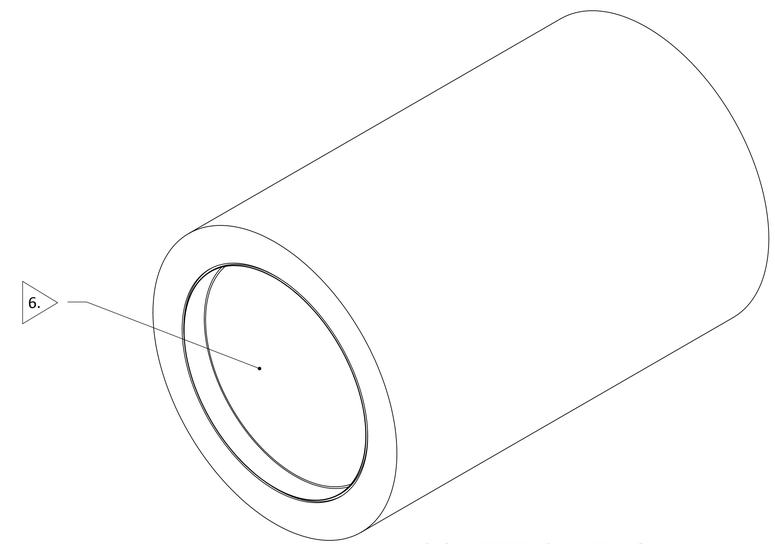

ISOMETRIC VIEWS
FOR REFERENCE ONLY
SCALE: NONE

MCX-MXX-101

PART NUMBER	PROCESS DESIGNATION	∅C_B (IN)	∅I.D. (IN)	∅O.D. (IN)	APPROX. WT
MCX-M1	-101	13.5554	13.3554	18.2132	324.89 LBS
MCX-M2	-101	13.0028	12.8028	17.5627	306.19 LBS
MCX-M3	-101	12.4662	12.2662	16.9310	288.51 LBS
MCX-M4	-101	11.9452	11.7452	16.3175	271.78 LBS
MCX-M5	-101	11.4394	11.2394	15.7218	255.96 lbs

SEE ENGINEERING RECORDS

MICROX

NEXT ASSY | USED ON

APPLICATION

TOLERANCE EXCEPT AS NOTED
DIMENSIONS ARE IN INCHES
DECIMAL .XX ±.03 .XXX ±.005
ANGLE ±.5

MATERIAL 2

HEAT TREAT

FINAL FINISH 3

ORIGINAL DATE OF DRAWING 8/19/2012

DRAFTSMAN | STRESS
ENGINEER | MNFG
MATERIALS | QA
CHECKER

SUBMITTED

APPROVED

MICROX MANDRELS
TUBE PRE-WELD MACHINE

EST WT 7 | SCALE 1/2 | CODE 339B2

GEORGE C. MARSHALL SPACE FLIGHT CENTER
NATIONAL AERONAUTICS AND SPACE ADMINISTATION
Marshall Space Flight Center, AL 35812

DWG SIZE D | MCX-MXX-101

SHEET 1 OF 1

REVISIONS				
ZONE	SYM	DESCRIPTION	DATE	APPROVAL

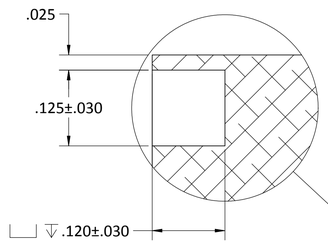

DETAIL B
SCALE 8 : 1

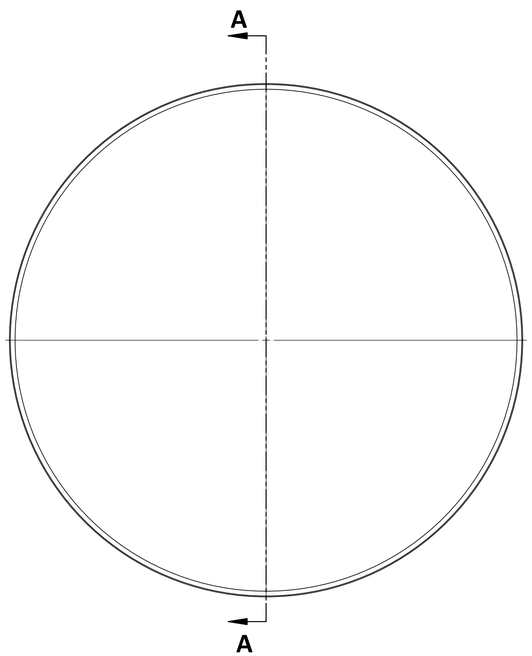

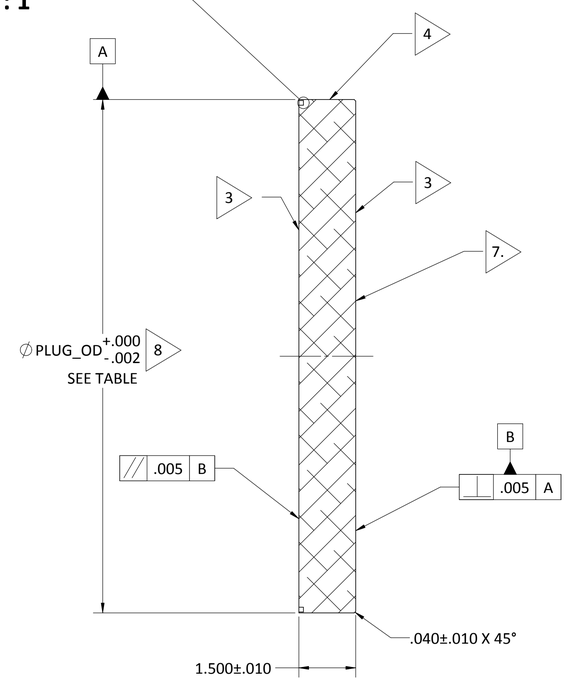

SECTION A-A
SCALE 1 : 2

NOTES:

1. INTERPRET DRAWING PER ASME Y14.5M-1994.
2. MATERIAL: 6061-T6511 AL ALLOY EXTRUDED ROUND BAR PER SAE AMS-QQ-A-200/8 & AMS 4173.
3. SURFACE ROUGHNESS: 125 MICROINCHES RMS.
4. SURFACE ROUGHNESS: 32 MICROINCHES RMS.
5. REMOVE ALL BURRS AND SHARP EDGES.
6. ALL RADIUS .030 MAX, UNLESS OTHERWISE SPECIFIED.
7. IDENTIFICATION OF PART NUMBER WITH PERMANENT MARKER OR INK STAMP,APPROXIMATLY AS SHOWN.
8. SEE TABLE FOR DIMENSIONS AND WEIGHTS

MCX-MXX-201

PART NUMBER	PROCESS DESIGNATION	PLUG_OD (IN)	APPROX. WT
MCX-M1	-201	13.551	21.04 LBS
MCX-M2	-201	12.999	19.36 LBS
MCX-M3	-201	12.462	17.79 LBS
MCX-M4	-201	11.941	16.33 LBS
MCX-M5	-201	11.435	14.97 LBS

SEE ENGINEERING RECORDS

NEXT ASSY | USED ON: MICROX

APPLICATION

TOLERANCE EXCEPT AS NOTED
DIMENSIONS ARE IN INCHES
DECIMAL .XX ±.03 .XXX ±.005
ANGLE ±.5

MATERIAL 2

HEAT TREAT

FINAL FINISH

ORIGINAL DATE OF DRAWING 8/19/2012
DRAFTSMAN | STRESS
ENGINEER | MNFG
MATERIALS | QA
CHECKER
SUBMITTED
APPROVED

MICROX MANDRELS

PLUG PRE-WELD MACHINE

EST WT 8 | SCALE 1/2 | CODE 339B2

GEORGE C. MARSHALL SPACE FLIGHT CENTER
NATIONAL AERONAUTICS AND SPACE ADMINISTATION
Marshall Space Flight Center, AL 35812

DWG SIZE D | MCX-MXX-201

SHEET 1 OF 1

REVISIONS				
ZONE	SYM	DESCRIPTION	DATE	APPROVAL

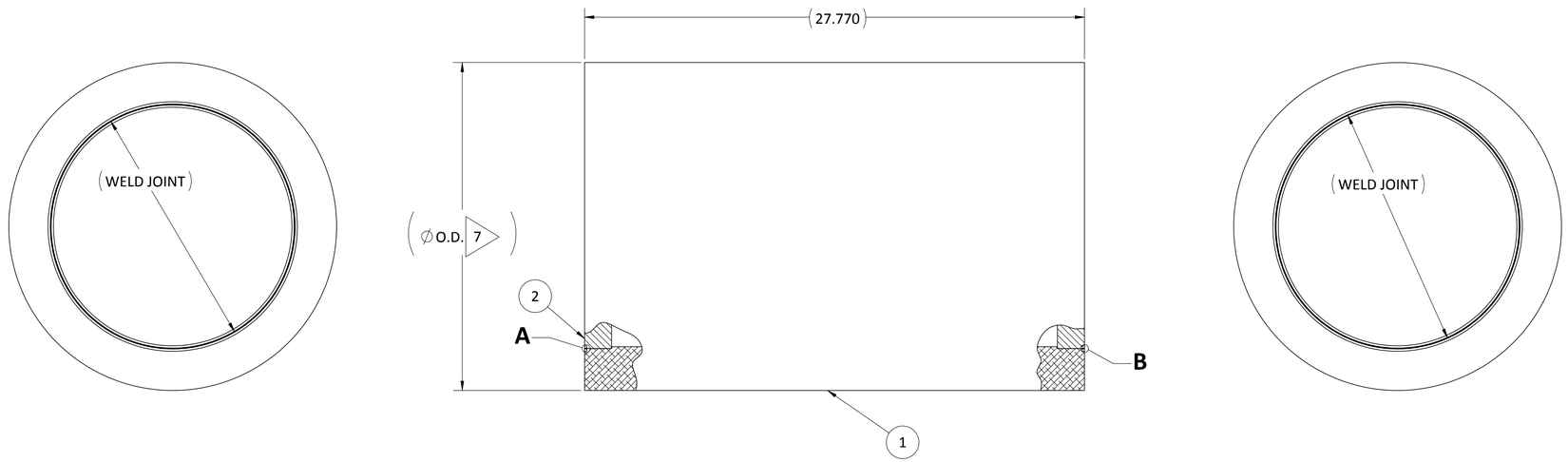

NOTES:

1. INTERPRET DRAWING PER ASME Y14.5M-1994.
2. MATERIAL: BOM
3. REMOVE ALL BURRS AND SHARP EDGES.
4. WELD PER ANSI/AWS A2.4 "STANDARD SYMBOLS FOR WELDING, BRAZING, AND NONDESTRUCTIVE EXAMINATION" WITH 100% VISUAL INSPECTION OF WELDS. UTILIZE WELDING TECHNIQUES AND PRACTICES TO MINIMIZE STRESS AND DISTORTION OF ALL MEMBERS. WELD IS NOT TO BUILD UP ABOVE END SURFACES AS FINAL MACHINING OF THE END SURFACES WILL BE REQUIRED AFTER WELDING. INTEGRITY OF THE WELDS ARE NOT TO BE JEOPARDIZED BY THE FINISHING CUTS ON BOTH ENDS.
5. IDENTIFICATION OF PART NUMBER WITH PERMANENT MARKER OR INK STAMP,APPROXIMATLY AS SHOWN.
6. SEE TABLE FOR DIMENSIONS AND WEIGHTS

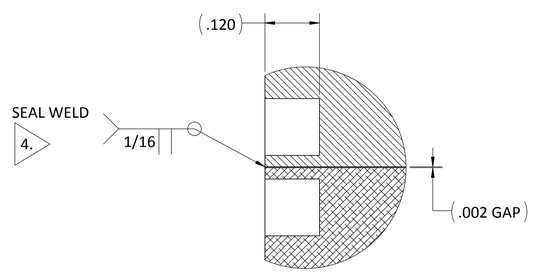

DETAIL A
SCALE 6 : 1

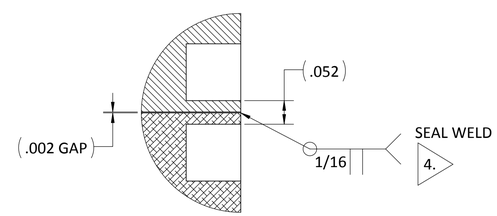

DETAIL B
SCALE 6 : 1

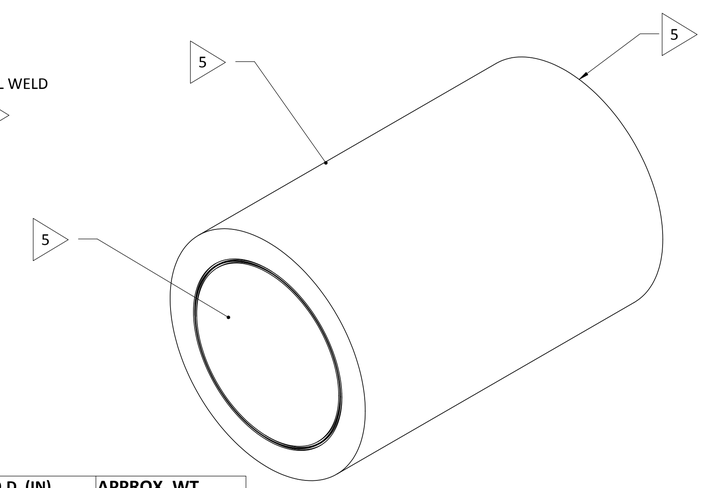

MCX-MXX-301

ISOMETRIC VIEWS
FOR REFERENCE ONLY
SCALE: NONE

ITEM NO.	PART NUMBER	DESCRIPTION	MCX-M1-301/QTY.	MCX-M2-301/QTY.	MCX-M3-301/QTY.	MCX-M5-301/QTY.	MCX-M4-301/QTY.
1	MCX-M1-101	TUBE PRE-WELD MACHINE	1	-	-	-	-
2	MCX-M1-201	PLUG PRE-WELD MACHINE	2	-	-	-	-
3	MCX-M2-101	TUBE PRE-WELD MACHINE	-	1	-	-	-
4	MCX-M2-201	PLUG PRE-WELD MACHINE	-	2	-	-	-
5	MCX-M3-101	TUBE PRE-WELD MACHINE	-	-	1	-	-
6	MCX-M3-201	PLUG PRE-WELD MACHINE	-	-	2	-	-
7	MCX-M5-101	TUBE PRE-WELD MACHINE	-	-	-	1	-
8	MCX-M5-201	PLUG PRE-WELD MACHINE	-	-	-	2	-
9	MCX-M4-101	TUBE PRE-WELD MACHINE	-	-	-	-	1
10	MCX-M4-201	PLUG PRE-WELD MACHINE	-	-	-	-	2

PART NUMBER	O.D. (IN)	APPROX. WT
MCX-M1-301	18.21	366.97 LBS
MCX-M2-301	17.56	344.90 LBS
MCX-M3-301	16.93	324.08 LBS
MCX-M4-301	16.32	304.44 LBS
MCX-M5-301	15.72	285.91 LBS

SEE ENGINEERING RECORDS

MICROX

NEXT ASSY | USED ON

APPLICATION

TOLERANCE EXCEPT AS NOTED
DIMENSIONS ARE IN INCHES
DECIMAL .XX ±.03 .XXX ±.005
ANGLE ±.5

MATERIAL 2

HEAT TREAT

FINAL FINISH

ORIGINAL DATE OF DRAWING 8/19/2012

DRAFTSMAN | STRESS

ENGINEER | MNFG

MATERIALS | QA

CHECKER

SUBMITTED

APPROVED

MICROX MANDRELS
MANDREL WELDMENT

EST WT 7 | SCALE 1/2 | CODE 339B2

GEORGE C. MARSHALL SPACE FLIGHT CENTER
NATIONAL AERONAUTICS AND SPACE ADMINISTATION
Marshall Space Flight Center, AL 35812

DWG SIZE D | MCX-MXX-301

SHEET 1 OF 1

REVISIONS				
ZONE	SYM	DESCRIPTION	DATE	APPROVAL

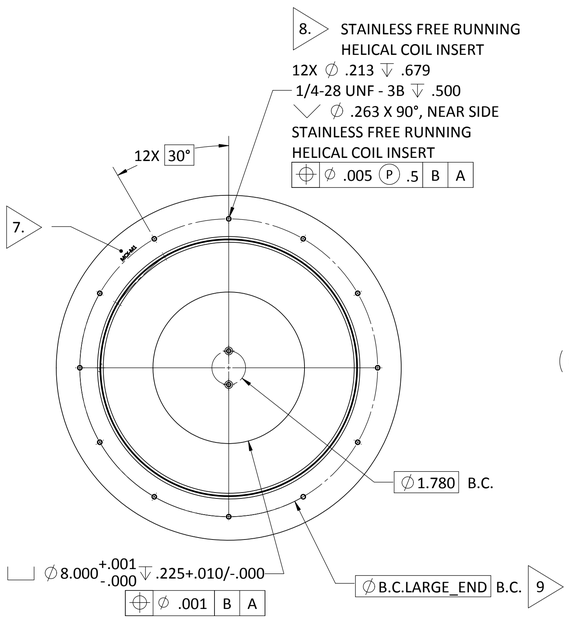

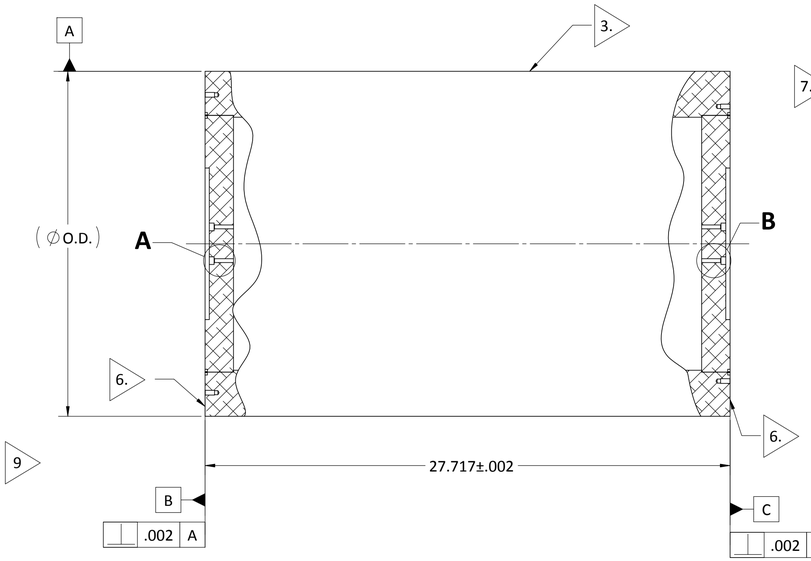

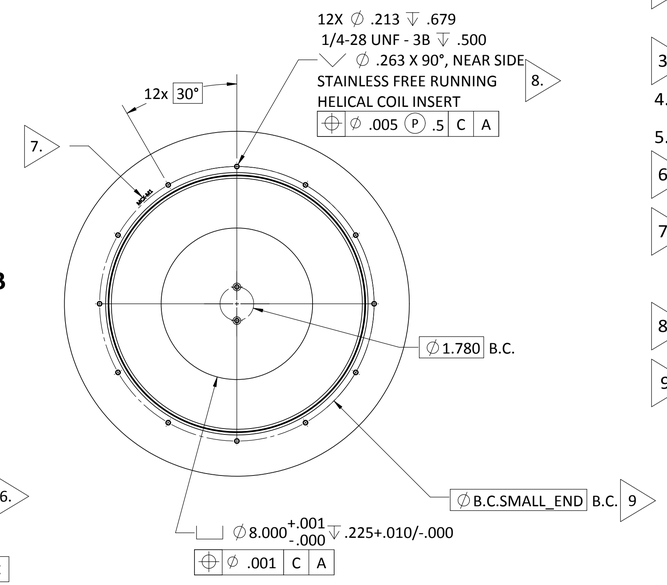

NOTES:

1. INTERPRET DRAWING PER ASME Y14.5M-1994
2. MATERIAL:MCX-M1-301, MCX-M2-301, MCX-M3-301, MCX-M4-301, MCX-M5-301
3. SURFACE ROUGHNESS: 125 MICROINCHES RMS.
4. REMOVE ALL BURRS AND SHARP EDGES.
5. ALL RADIUS .010 MAX, UNLESS OTHERWISE SPECIFIED.
6. SURFACE ROUGHNESS: 32 MICROINCHES RMS.
7. IMPRESSION STAMP PART NUMBER, "MCX-MXX", PER MIL-STD-130, USING 3/32 INCH MIN. CHARACTERS. APPROXIMATELY LOCATE AS SHOWN. APPLY BEFORE FINAL SURFACE CUT.
8. INSTALL THREADED INSERT PER NASM33537.
9. SEE TABLE FOR DIMENSIONS AND WEIGHTS

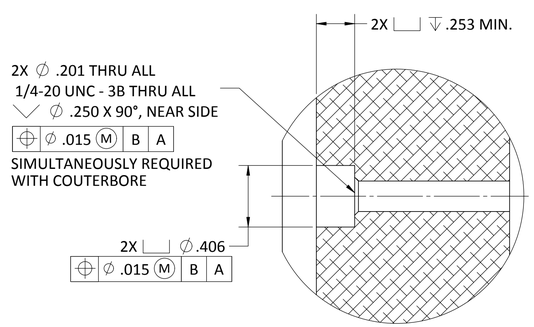

DETAIL A
SCALE 2 : 1

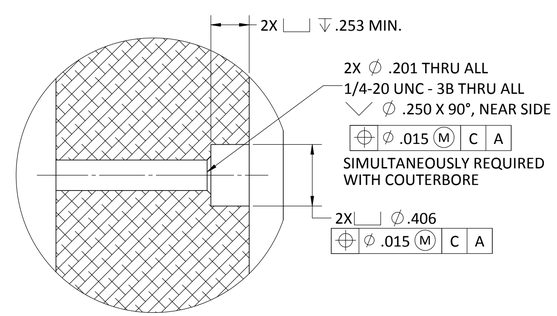

DETAIL B
SCALE 2 : 1

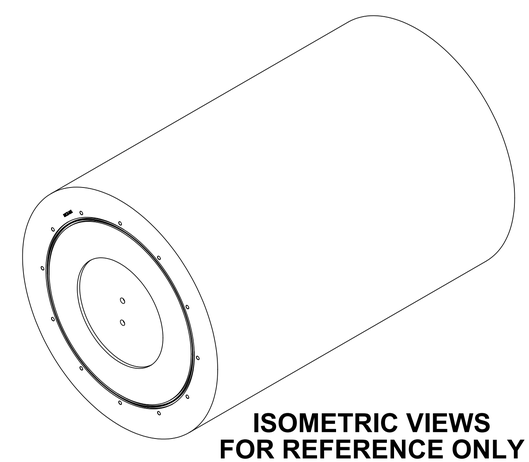

ISOMETRIC VIEWS
FOR REFERENCE ONLY
SCALE: NONE

MCX-MXX-401

PART NUMBER	PROCESS DESIGNATION	B.C.SMALL_END (IN)	B.C.LARGE_END (IN)	O.D. (IN)	APPROX. WT
MCX-M1	-401	14.4936	15.7243	18.2132	366.13 LBS
MCX-M2	-401	13.9362	15.1228	17.5627	344.09 LBS
MCX-M3	-401	13.3949	14.5386	16.9310	323.31 LBS
MCX-M4	-401	12.8693	13.9714	16.3175	303.70 LBS
MCX-M5	-401	12.3590	13.4206	15.7218	285.19 LBS

SEE ENGINEERING RECORDS

NEXT ASSY: MICROX
USED ON
APPLICATION

TOLERANCE EXCEPT AS NOTED
DIMENSIONS ARE IN INCHES
DECIMAL .XX ±.03 .XXX ±.005
ANGLE ±.5

MATERIAL 2
HEAT TREAT
FINAL FINISH 3

ORIGINAL DATE OF DRAWING 8/19/2012
DRAFTSMAN | STRESS
ENGINEER | MNFG
MATERIALS | QA
CHECKER
SUBMITTED
APPROVED

MICROX MANDRELS, INITIAL MACHINE ALTERED ITEM

EST WT 9 | SCALE 1/2 | CODE 339B2

GEORGE C. MARSHALL SPACE FLIGHT CENTER
NATIONAL AERONAUTICS AND SPACE ADMINISTATION
Marshall Space Flight Center, AL 35812

DWG SIZE D | MCX-MXX-401

SHEET 1 OF 1

REVISIONS				
ZONE	SYM	DESCRIPTION	DATE	APPROVAL

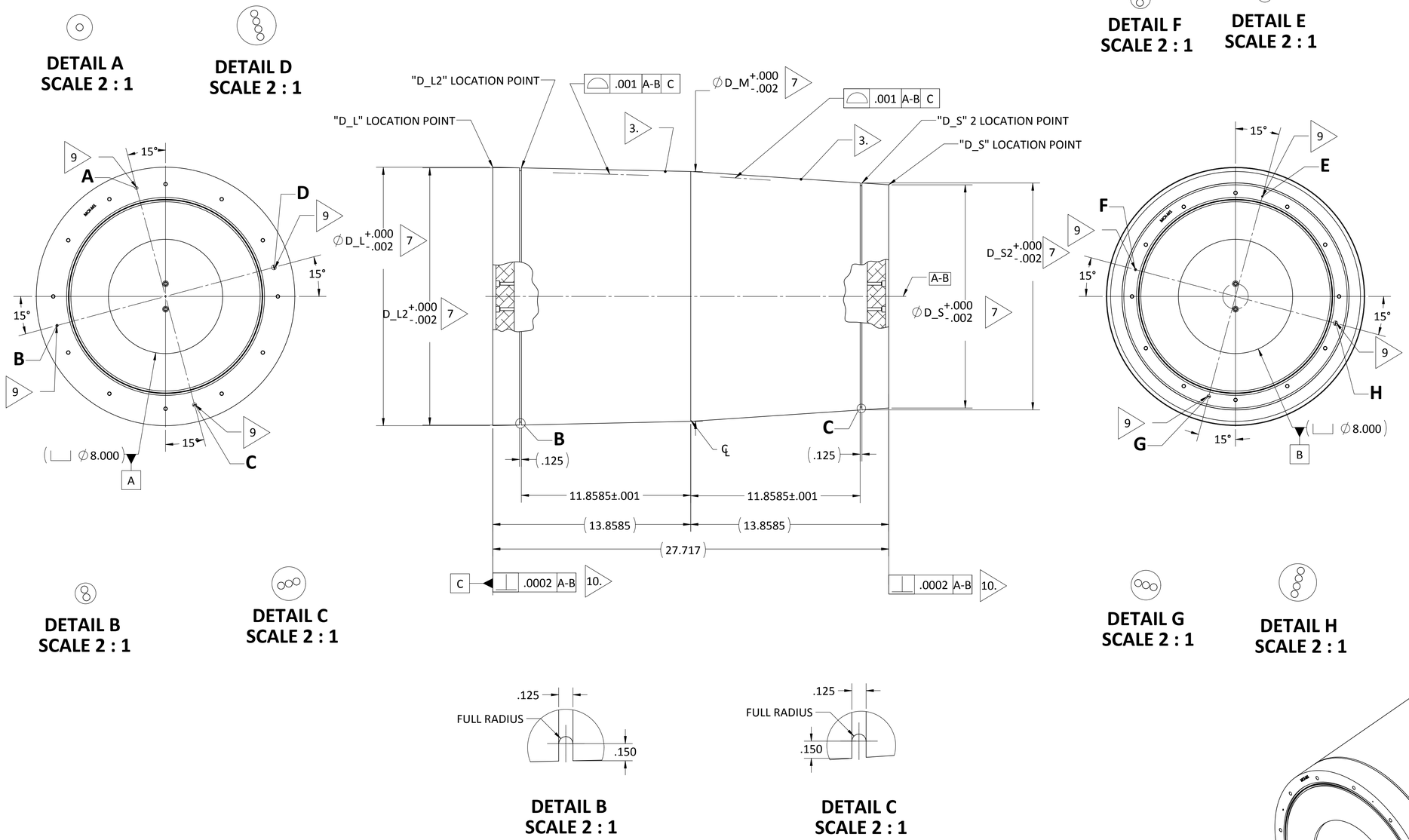

NOTES:

1. INTERPRET DRAWING PER ASME Y14.5M-1994.
2. MATERIAL: MCX-M1-401, MCX-M2-401, MCX-M3-401, MCX-M4-401, MCX-M5-401
3. SURFACE ROUGHNESS: 32 MICROINCHES RMS.
4. REMOVE ALL BURRS AND SHARP EDGES.
5. ALL RADIUS .010 MAX, UNLESS OTHERWISE SPECIFIED.
6. CLEAN PER JSC SN-C-0005, VISIBLY CLEAN (VC). WRAP MANDREL IN (VC) ALUMINUM FOIL. WRAP ALUMINUM FOIL WRAPED MANDREL IN BUBBLE WRAP FOR HANDLING.
7. SEE TABLE FOR DIMENSIONS AND WEIGHTS
8. MACHINE TO WITHIN .010"-.015" OF FINAL DIAMETERS. THEN STRESS RELIEVE (SEE MICRO-X MANDREL STRESS RELIEF PROCEDURE). AFTER STRESS RELIEF VISUALLY INSPECT 100% OF THE WELDS FOR DEFECTS AND THEN MACHINE TO FINAL DIMENSIONS.
9. FIDUCIAL MARKINGS ARE .062" DIAMETER AND .010" MIN DEEP. APPROXIMATELY LOCATE AS SHOWN. FIDUCIALS ARE TO BE ALIGNED WITH THEIR CORRESPONDING FIDUCIAL ON THE OPPOSITE END. TBR
10. LAP ENDS BEFORE TURNING FINAL DIAMETERS

MCX-MXX-001

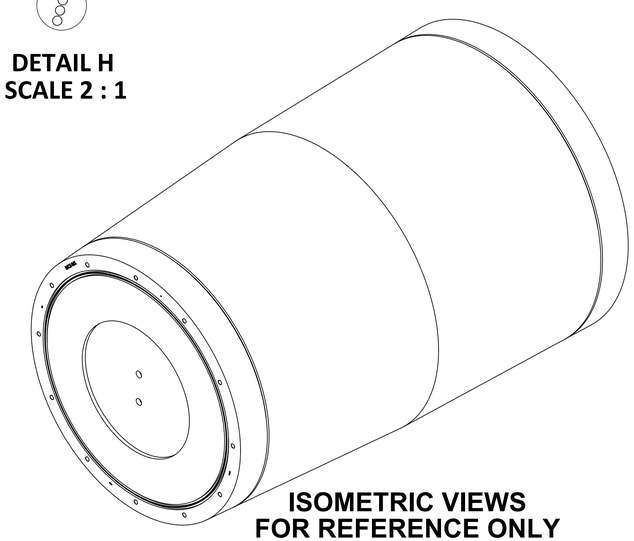

ISOMETRIC VIEWS FOR REFERENCE ONLY SCALE: NONE

PART NUMBER	PROCESS DESIGNATION	∅D_L (IN)	∅D_L2 (IN)	∅D_M (IN)	∅D_S2 (IN)	∅D_S (IN)	APPROX. WT
MCX-M1	-001	18.0932	18.0061	17.4893	15.8831	15.6318	247.19 LBS
MCX-M2	-001	17.4427	17.3586	16.8604	15.3118	15.0695	233.62 LBS
MCX-M3	-001	16.8110	16.7300	16.2497	14.7570	14.5235	220.75 LBS
MCX-M4	-001	16.1975	16.1195	15.6566	14.2183	13.9933	208.55 LBS
MCX-M5	-001	15.6018	15.5266	15.0807	13.6953	13.4785	196.98 lbs

SEE ENGINEERING RECORDS

NEXT ASSY: MICROX
USED ON
APPLICATION

TOLERANCE EXCEPT AS NOTED
DIMENSIONS ARE IN INCHES
DECIMAL .XX ±.03 .XXX ±.005
ANGLE ±.5

MATERIAL 2
HEAT TREAT 8
FINAL FINISH 6

ORIGINAL DATE OF DRAWING 8/19/2012
DRAFTSMAN | STRESS
ENGINEER | MNFG
MATERIALS | QA
CHECKER
SUBMITTED
APPROVED

MICROX MANDRELS, PRE-ELECTROLESS NICKEL PLATE

EST WT 7 | SCALE 1/2 | CODE 339B2

GEORGE C. MARSHALL SPACE FLIGHT CENTER
NATIONAL AERONAUTICS AND SPACE ADMINISTATION
Marshall Space Flight Center, AL 35812

DWG SIZE D | MCX-MXX-001

SHEET 1 OF 1

REVISIONS				
ZONE	SYM	DESCRIPTION	DATE	APPROVAL

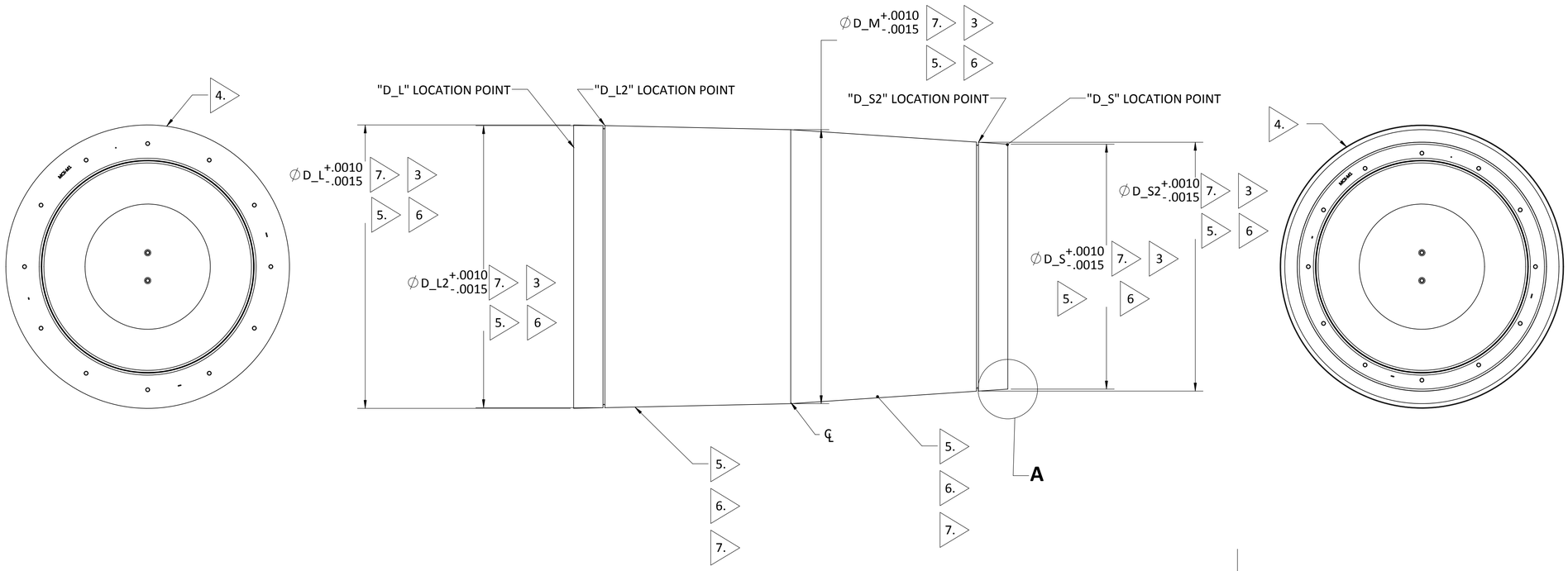

NOTES:

1. INTERPRET DRAWING PER ASME Y14.5M-1994.
2. MATERIAL: MCX-M1-001, MCX-M2-001, MCX-M3-001 MCX-M4-001, MCX-M5-001
3. SEE TABLE FOR DIMENSIONS AND WEIGHTS
4. MASKED AREA DEFINED BY CORRESPONDING PLATING END CAP O.D. USED DURING PLATING. USE CAP WITH MATCHING PART MARKING.
5. COATING: REFER TO THE "EN REQUIREMENTS FOR MICRO-XC" PROCEDURE.
6. DIMENSIONS APPLY AFTER PLATING.
7. WHEN MEASURING "D_L", "D_M", & "D_S" USE THE SAME MEASUREMENT LOCATIONS SHOWN ON THE "PRE-PLATE" PROCESS DRAWING (-001). SEE DETAIL "A" BELOW FOR CLARIFICATION ON THE END DIAMETERS. END DIAMETER MEASUREMENTS ARE TAKEN FROM THE MANDREL ENDS MINUS THE ROLLOVER.
8. POST PLATE HEAT TREATMENT: REFER TO THE "EN REQUIREMENTS FOR MICRO-XC" PROCEDURE.
9. CLEAN AND DRY AND RETURN IN ORIGINAL NASA PACKING CONFIGURATION.

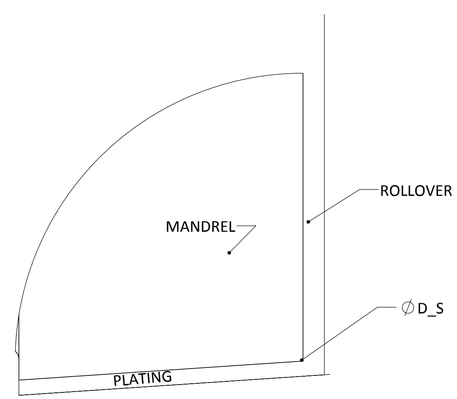

DETAIL A
SCALE 2 : 1

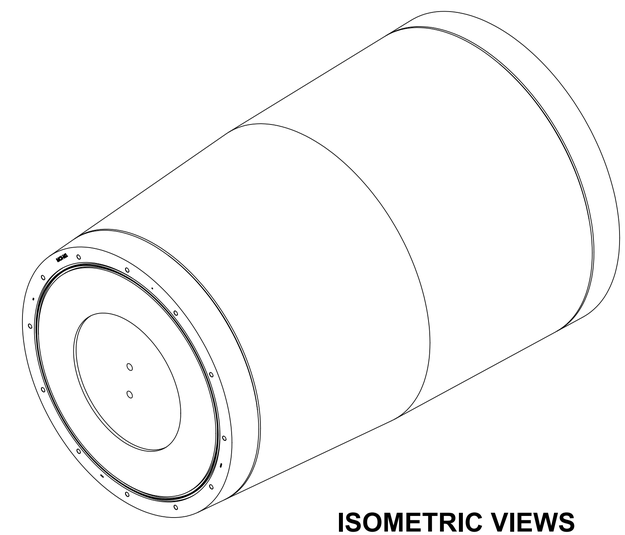

ISOMETRIC VIEWS
FOR REFERENCE ONLY
SCALE: NONE

MCX-MXX-003

PART NUMBER	PROCESS DESIGNATION	∅D_L (IN)	∅D_L 2(IN)	∅D_M (IN)	∅D_S (IN)	∅D_S2 (IN)	APPROX. WT
MCX-M1	-003	18.1072	18.0201	17.5033	15.6458	15.8971	247.77 LBS
MCX-M2	-003	17.4567	17.3726	16.8744	15.0835	15.3258	234.18 LBS
MCX-M3	-003	16.8250	16.7440	16.2637	14.5375	14.7710	221.30 LBS
MCX-M4	-003	16.2115	16.1335	15.6706	14.0073	14.2323	209.07 LBS
MCX-M5	-003	15.6158	15.5406	15.0947	13.4925	13.7093	197.48 LBS

SEE ENGINEERING RECORDS

NEXT ASSY: MICROX
USED ON
APPLICATION

TOLERANCE EXCEPT AS NOTED
DIMENSIONS ARE IN INCHES
DECIMAL .XX ±.03 .XXX ±.005
ANGLE ±.5°

MATERIAL 2
HEAT TREAT
FINAL FINISH

ORIGINAL DATE OF DRAWING 7/25/2012
DRAFTSMAN
STRESS
ENGINEER
MNFG
MATERIALS
QA
CHECKER
SUBMITTED
APPROVED

MICROX MANDRELS, POST-PLATING (ALTERED ITEM)

EST WT 10
SCALE 1/4
CODE 339B2

GEORGE C. MARSHALL SPACE FLIGHT CENTER
NATIONAL AERONAUTICS AND SPACE ADMINISTATION
Marshall Space Flight Center, AL 35812

DWG SIZE D
MCX-MXX-003
SHEET 1 OF 1

REVISIONS				
ZONE	SYM	DESCRIPTION	DATE	APPROVAL

NOTES:

1. INTERPRET DRAWING PER ASME Y14.5M-1994.
2. MATERIAL: MCX-M1-003, MCX-M2-003, MCX-M3-003, MCX-M5-003, MCX-M5-003
3. USE ONLY THE UNPLATED AREA ON BOTH ENDS FOR MOUNTING TO THE MANDREL AND REFERENCING.
4. WHEN MEASURING "D_L", "D_M", & "D_S" USE THE SAME MEASUREMENT LOCATIONS SHOWN ON THE "PRE-PLATE" PROCESS DRAWING (-001). SEE DETAIL "A" BELOW FOR CLARIFICATION ON THE END DIAMETERS. END DIAMETER MEASUREMENTS ARE TAKEN FROM THE MANDREL ENDS MINUS THE ROLLOVER.
5. SINGLE POINT DIAMOND TURN THE INDICATED SURFACE.
6. SURFACE ROUGHNESS: SHALL NOT EXCEED 300 ANGSTROM RMS.
7. PARABOLOID PROFILE FOR THE INDICATED SURFACE. DEVIATION SHALL NOT EXCEED +/- 0.7 MICROMETERS FROM THE DESIRED PARABOLIC FORM.
8. HYPERBOLOID PROFILE FOR THE INDICATED SURFACE. DEVIATION SHALL NOT EXCEED +/- 0.7 MICROMETERS FROM THE DESIRED HYPERBOLIC FORM.
9. VISIBLY CLEAN AND RETURN IN ORIGINAL NASA PACKING CONFIGURATION.
10. SEE TABLE FOR DIMENSIONS AND WEIGHTS

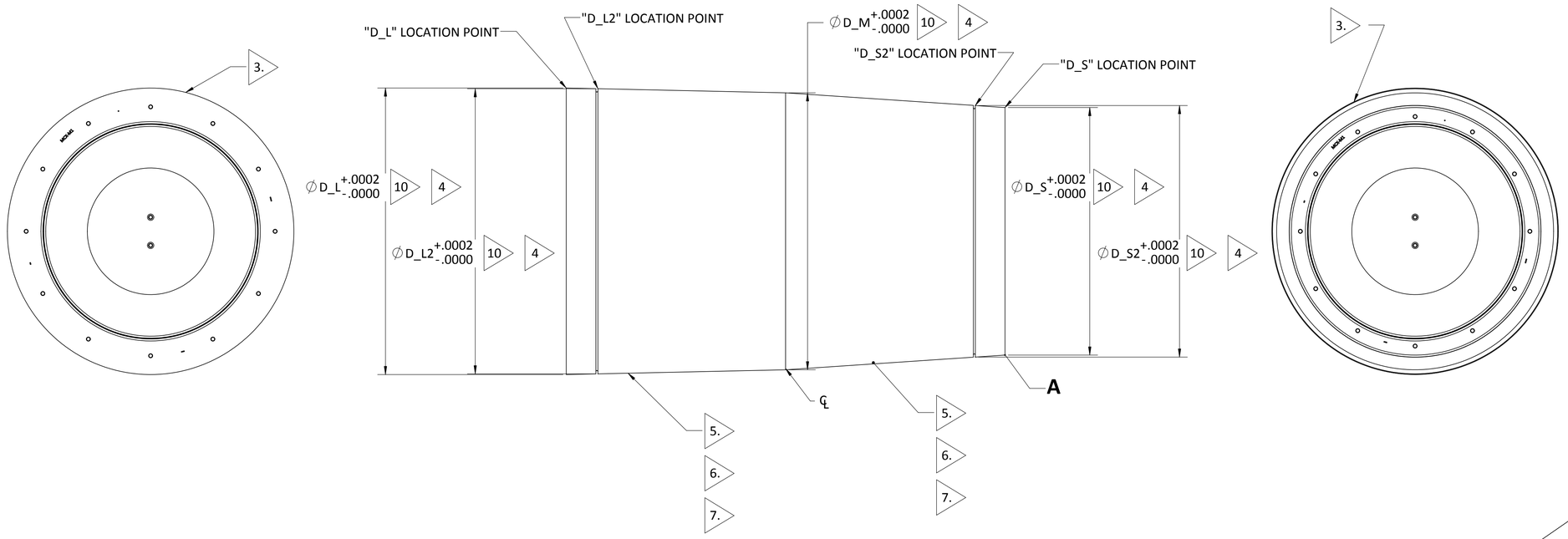

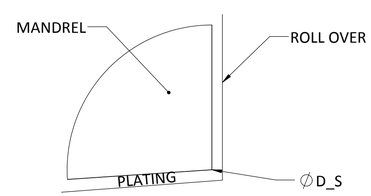

DETAIL A
SCALE 40 : 1

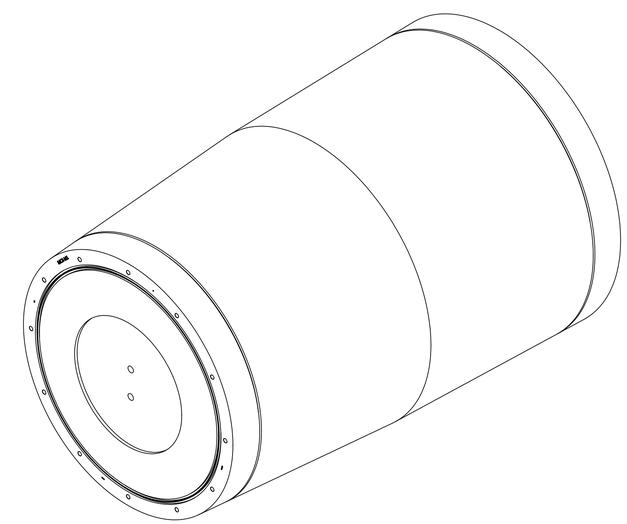

ISOMETRIC VIEWS
FOR REFERENCE ONLY
SCALE: NONE

MCX-MXX-005

PART NUMBER	PROCESS DESIGNATION	∅D_L (IN)	∅D_L2 (IN)	∅D_M (IN)	∅D_S (IN)	∅D_S2 (IN)	APPROX. WT
MCX-M1	-003	18.0992	18.0133	17.4953	15.6378	15.8907	247.63 LBS
MCX-M2	-003	17.4487	17.3659	16.8664	15.0755	15.3193	234.04 LBS
MCX-M3	-003	16.8170	16.7371	16.2557	14.5295	14.7645	221.16 LBS
MCX-M4	-003	16.2035	16.1266	15.6626	13.9993	14.2257	208.94 LBS
MCX-M5	-003	15.6078	15.5337	15.0867	13.4845	13.7026	197.35 LBS

SEE ENGINEERING RECORDS

NEXT ASSY: MICROX
USED ON
APPLICATION

TOLERANCE EXCEPT AS NOTED
DIMENSIONS ARE IN INCHES
DECIMAL .XX ±.03 .XXX ±.005
ANGLE ±.5

MATERIAL 2
HEAT TREAT
FINAL FINISH

ORIGINAL DATE OF DRAWING 7/25/2012
DRAFTSMAN | STRESS
ENGINEER | MNFG
MATERIALS | QA
CHECKER
SUBMITTED
APPROVED

MICROX MANDRELS, FINAL (ALTERED ITEM)

EST WT 10 | SCALE 1/4 | CODE 339B2

GEORGE C. MARSHALL SPACE FLIGHT CENTER
NATIONAL AERONAUTICS AND SPACE ADMINISTATION
Marshall Space Flight Center, AL 35812

DWG SIZE D | MCX-MXX-005

SHEET 1 OF 1