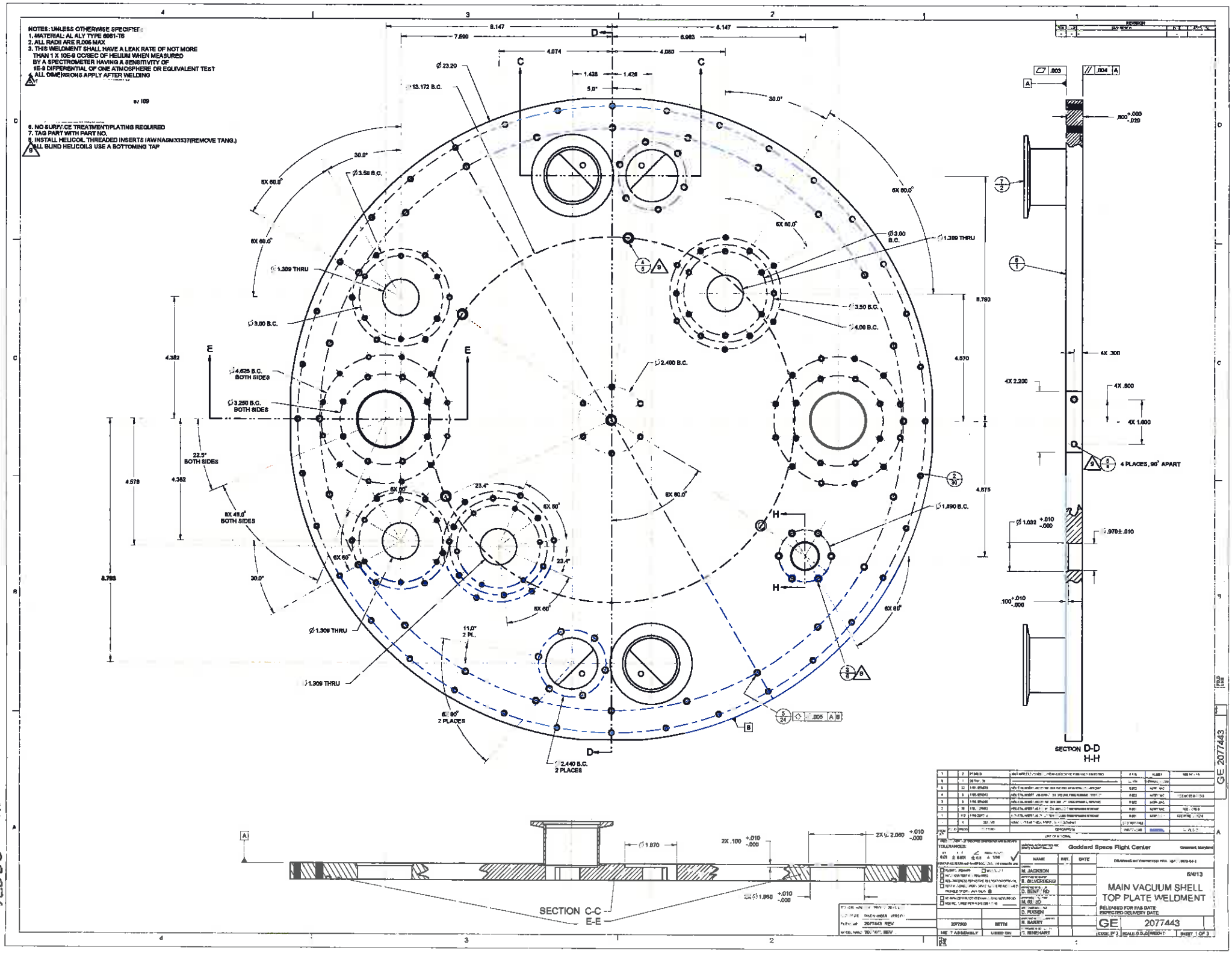
NOTES: UNLESS OTHERWISE SPECIFIED:
1. MATERIAL: AL ALY TYPE 6061-T6
2. ALL RADII ARE R.005 MAX
3. THIS WELDMENT SHALL HAVE A LEAK RATE OF NOT MORE THAN 1 X 10E-9 CC/SEC OF HELIUM WHEN MEASURED BY A SPECTROMETER HAVING A SENSITIVITY OF 1E-9 DIFFERENTIAL OF ONE ATMOSPHERE OR EQUIVALENT TEST
4. ALL DIMENSIONS APPLY AFTER WELDING
6. NO SURFACE TREATMENT/PLATING REQUIRED
7. TAG PART WITH PART NO.
8. INSTALL HELICOIL THREADED INSERTS IAW NASM33537(REMOVE TANG.)
9. ALL BLIND HELICOILS USE A BOTTOMING TAP
SECTION D-D
H-H
SECTION C-C
E-E
Goddard Space Flight Center
Greenbelt, Maryland
M. JACKSON
E. SILVERBERG
D. BENFORD
M. RUSSO
D. RUSSEN
R. BARRY
T. RINEHART
6/4/13
MAIN VACUUM SHELL
TOP PLATE WELDMENT
RELEASED FOR FAB DATE
EXPECTED DELIVERY DATE
GE
2077443
SCALE 0.5:1
SHEET 1 OF 3
GE 2077443

42004 88376

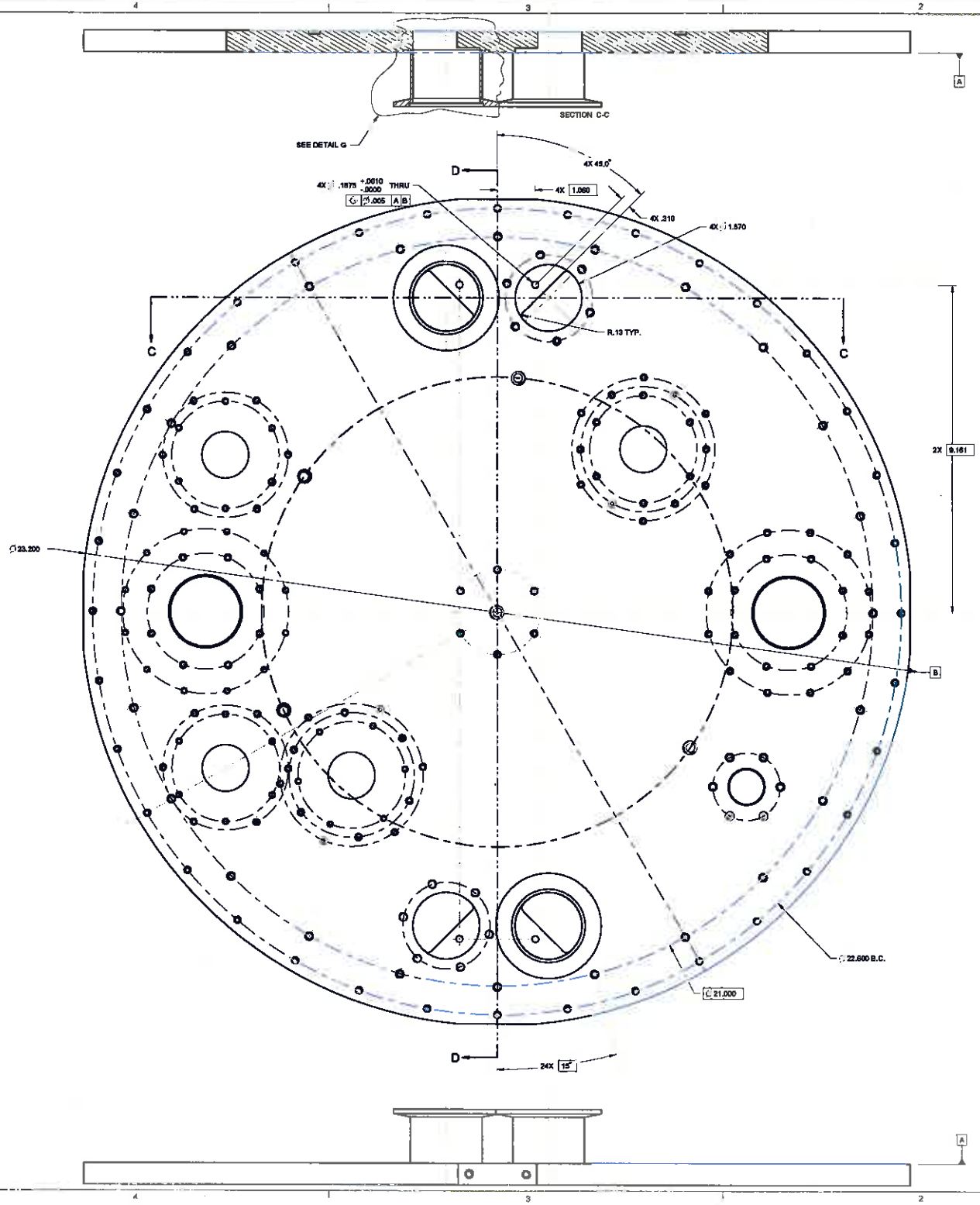

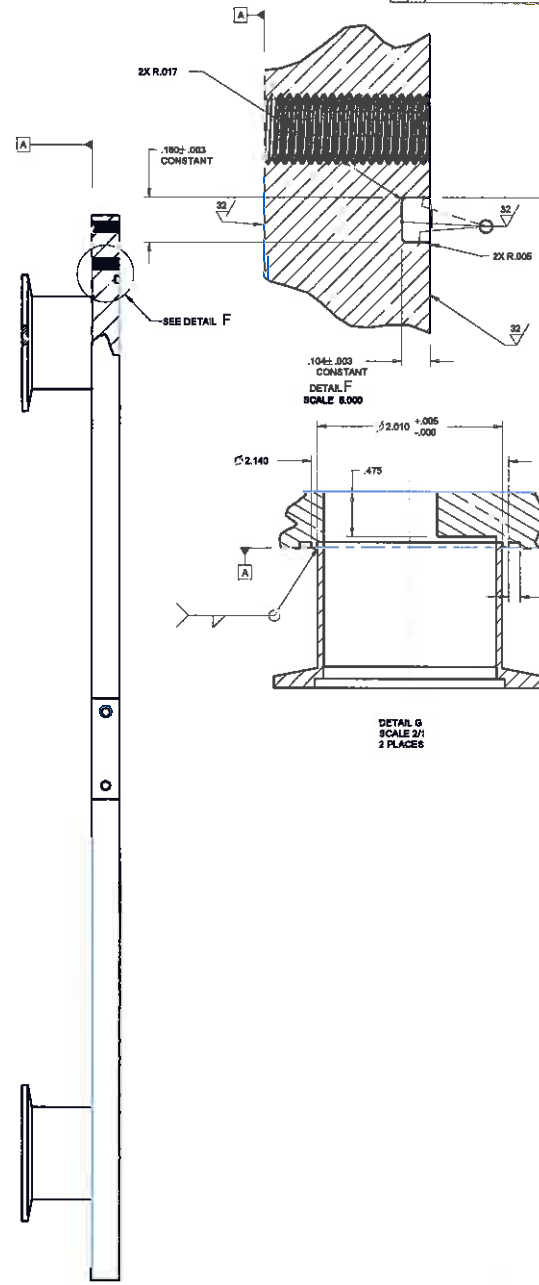

Goddard Space Flight Center

NAME	INIT.	DATE

MAIN VACUUM SHELL
TOP PLATE WELDMENT

GE 2077443

SHEET 2 OF 3

GE 2077443

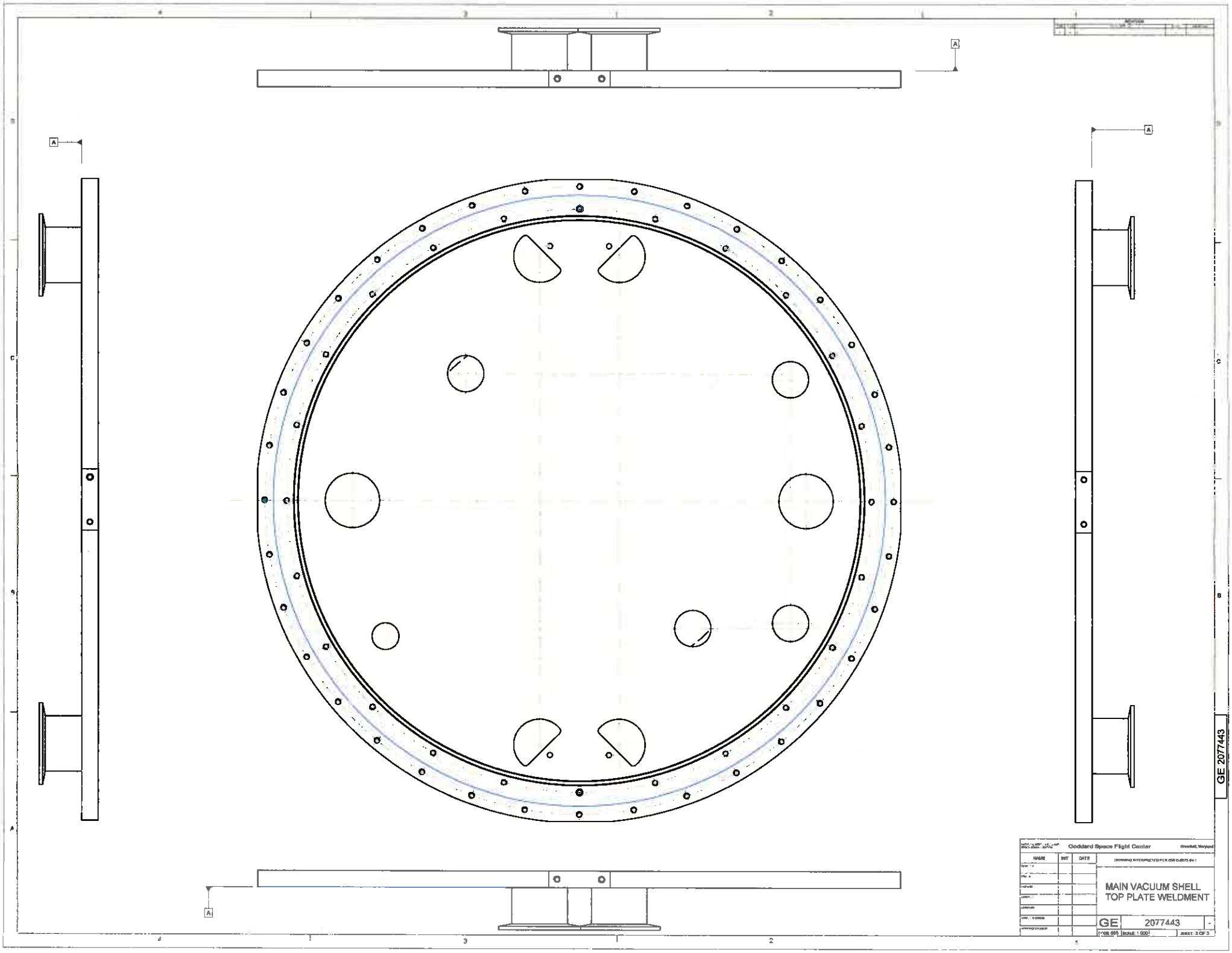

A
A
A
A
Goddard Space Flight Center
Greenbelt, Maryland
NAME
INIT
DATE
DRAWING INTERPRETED PER GSFC-0873-04-1
MAIN VACUUM SHELL
TOP PLATE WELDMENT
GE
2077443
-
CODE 665
SCALE: 1:000
SHEET: 3 OF 3
GE 2077443

NOTES UNLESS OTHERWISE SPECIFIED:
1. MATERIAL: AL ALY TYPE 6061-T6
2. NO SURFACE TREATMENT/PLATING REQUIRED
3. ALL RADII ARE R.005 MAX
4. INSTALL HELICAL THREADED INSERT IAW NASM33537

24X 15°

24X Ø .201 +.005 -.001 THRU
Ø .005 F B

Ø21.000

Ø22.00
Ø .01 F B

SECTION A-A
SCALE 0.500
4 PL.

1.600
4 PL.

2.200 +.010 -.000
4 PL.

Ø20.010 +.005 -.000
-B-

2X 21.890 +.000 -.010

2/8 4
Ø .010 F B

.240

32

.475 +.010 -.000
-F-

.128±.003

Ø19.744
Ø .010 F B

1/1

DETAIL C
SCALE 2.000

-F-
.002

FOLD LINE

FRESS-FIT DRILL BUSHING, Ø13/32 O.D., Ø .2500 I.D.

-F-

SEE DETAIL C

-F-

SECTION B-B

ITEM NO.	REQD	REQD	PART NO.	DESCRIPTION	WEIGHT(Lbf)	MATERIAL	MAT'L SPEC
2		8	T1191-3C-380	HELI-COIL INSERT, #10-32 UNF-2B X .380 LNG, FREE RUNNING,NITRONIC	0.001		SEE NOTE 4 & 5
1		1	2077455-01	MAIN VACUUM SHELL BASE WELDMENT FLANGE	3.089		
-		X		MAIN VACUUM SHELL BASE WELDMENT FLANGE	3.089 (TOTAL)		

LIST OF MATERIAL

THIRD ANGLE PROJECTION

INCH
HYBRID METRIC/INCH
METRIC

HARDWARE CLASSIFICATION: NON-FLIGHT

UNLESS OTHERWISE SPECIFIED REMOVE ALL SHARP EDGES R.005

XX ±.02 X ±.005 XXX ±.010 XXXX ±.0 Ra125 Max

UNLESS OTHERWISE SPECIFIED REMOVE ALL SHARP EDGES R0.5

XX ±0.1 X ±0.2 XXX ±0.0 XXXX ±1.0 Ra125 Max

SOFTWARE: Pro/ENGINEER CREO 2.0
FILE LOCATION: C:\BETTI_REF_WRY_2_2\BETTI_8_26
DRAWING FILE: 2077455 REV -.11
MODEL FILE: 2077455 REV -.22

2077460 | BETTI
NEXT ASSY | USED ON

NATIONAL AERONAUTICS AND SPACE ADMINISTRATION — Goddard Space Flight Center, Greenbelt, Md.

DRAWING INTERPRETED PER 500-PG-8700.2.6

NAME	INIT.	DATE
M. JACKSON		
E. SILVERBERG		
M. RIZZO		
D. BENFORD		
D. FIXSEN		
R. BARRY		
S. RINEHART		

TITLE 6/4/13
MAIN VACUUM SHELL , BASE WELDMENT , MOUNT FLANGE

RELEASED FOR FAB DATE
EXPECTED DELIVERY DATE

SIZE C | CODE 36FC1 | DRAWING 2077455 | REV -

SCALE: 0.200 | SHEET: 1 OF 1

GSFC 4-47 (5/07)

REV	ZONE	DESCRIPTION	DATE	APPROVAL

NOTES UNLESS OTHERWISE SPECIFIED:
1. MATERIAL: AL ALY TYPE 6061-T6
2. ALL RADII ARE R.005 MAX
3. NO SURFACE TREATMENT/PLATING REQUIRED

QUANTITY: 1

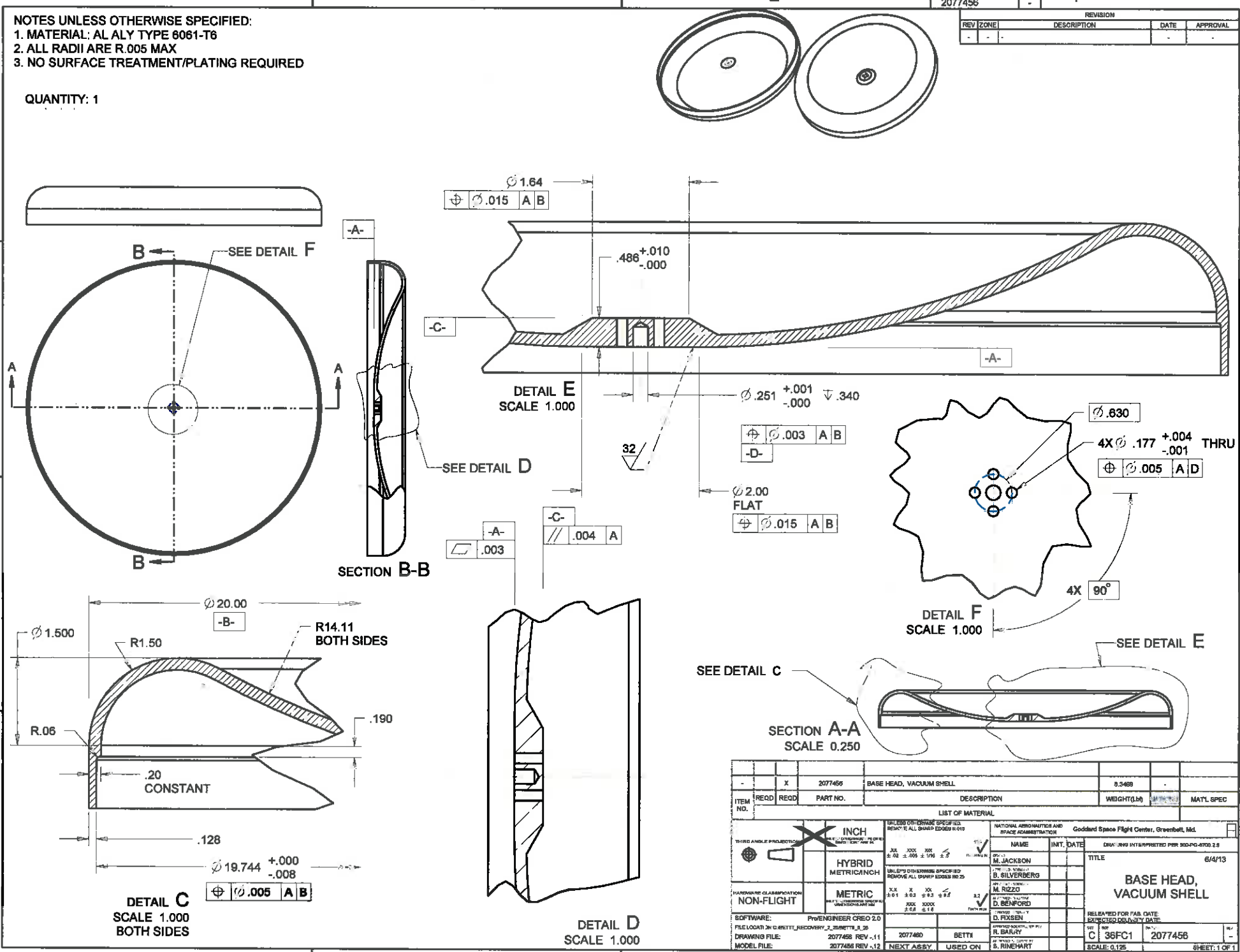

REV	ZONE	DESCRIPTION	DATE	APPROVAL
-	-	-	-	-

ITEM NO.	REQD	REQD	PART NO.	DESCRIPTION	WEIGHT(Lbf)		MAT'L SPEC
-		X	2077456	BASE HEAD, VACUUM SHELL	8.3469	-	

LIST OF MATERIAL

THIRD ANGLE PROJECTION

INCH

HYBRID METRIC/INCH

METRIC

HARDWARE CLASSIFICATION: NON-FLIGHT

UNLESS OTHERWISE SPECIFIED REMOVE ALL SHARP EDGES R.010

UNLESS OTHERWISE SPECIFIED REMOVE ALL SHARP EDGES R0.25

NATIONAL AERONAUTICS AND SPACE ADMINISTRATION — Goddard Space Flight Center, Greenbelt, Md.

DRAWING INTERPRETED PER 300-PG-6700.2.5

NAME	INIT.	DATE
M. JACKSON		
B. SILVERBERG		
M. RIZZO		
D. BENFORD		
D. FIXSEN		
R. BARRY		
S. RINEHART		

TITLE 6/4/13

BASE HEAD, VACUUM SHELL

RELEASED FOR FAB. DATE
EXPECTED DELIVERY DATE

SOFTWARE: Pro/ENGINEER CREO 2.0
FILE LOCATION: C:/BETTI_RECOVERY_2_28/BETTI_8_28
DRAWING FILE: 2077456 REV -.11
MODEL FILE: 2077456 REV -.12

NEXT ASSY	USED ON
2077460	BETTI

C 36FC1 2077456 -

SCALE: 0.125 SHEET: 1 OF 1

GSFC 4-47 (8/07)

FOLD LINE

NOTES UNLESS OTHERWISE SPECIFIED:
1. NO SURFACE TREATMENT/PLATING REQUIRED

REVISION				
REV	ZONE	DESCRIPTION	DATE	APPROVAL
-	-	-	-	-

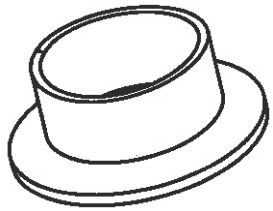

SCALE 1.000

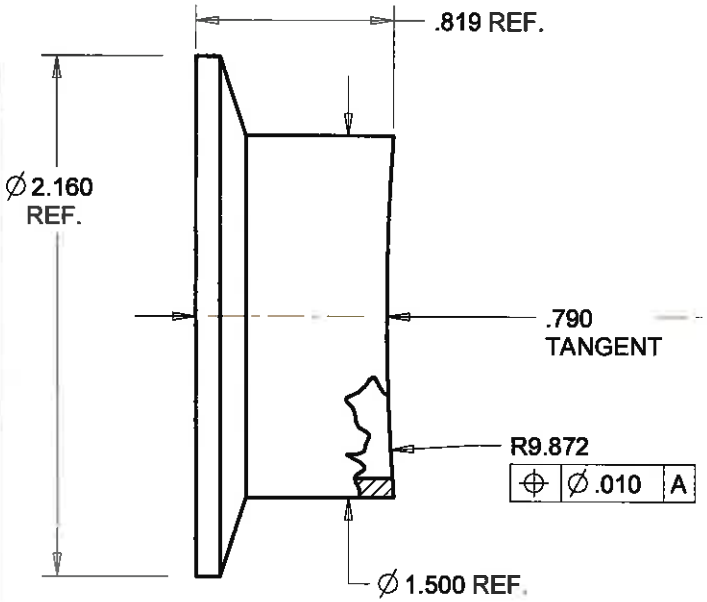

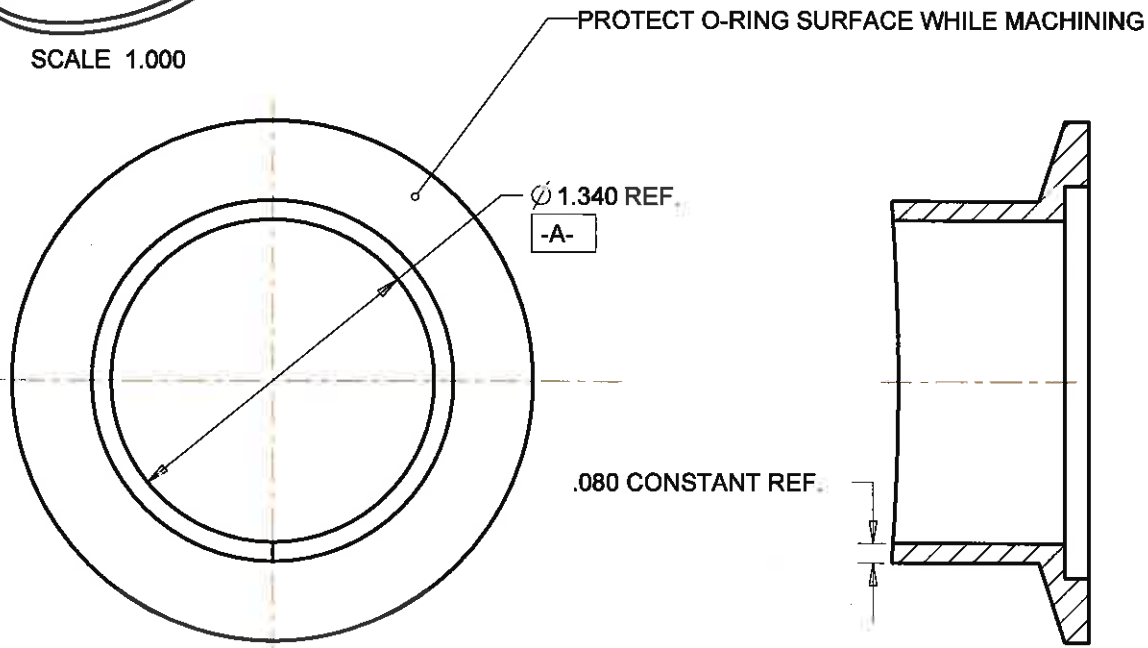

ITEM NO.	REQD	REQD	PART NO.	DESCRIPTION	MATERIAL	MAT'L SPEC OR CAGE CODE
-		X	QF40-150-LFA	KF 40 HALF NIPPLE, ALUMINUM	AL ALY 6061-T6	SEE NOTE 2

LIST OF MATERIAL

THIRD ANGLE PROJECTION

INCH (UNLESS OTHERWISE SPECIFIED DIMENSIONS ARE IN.)

HYBRID METRIC/INCH

METRIC (UNLESS OTHERWISE SPECIFIED DIMENSIONS ARE MM)

HARDWARE CLASSIFICATION: NON-FLIGHT

UNLESS OTHERWISE SPECIFIED: REMOVE ALL SHARP EDGES R.010
.XX ±.02 .XXX ±.005 .X/X ±1/16 ∠ ±.5 finish_finish FINISH IN µ in

UNLESS OTHERWISE SPECIFIED: REMOVE ALL SHARP EDGES R0.26
X.X ±0.1 X ±0.2 XX ±0.8 ∠ ±1.5 finish_finish XXX ±0.8 XXXX ±1.5 FINISH IN µm

SOFTWARE:	Pro/ENGINEER CREO 2.0
FILE LOCATION:	
DRAWING FILE:	2077457 REV .
MODEL FILE:	2077457 REV .

NEXT ASSY	USED ON
2077460	BETTII

NATIONAL AERONAUTICS AND SPACE ADMINISTRATION — Goddard Space Flight Center — GREENBELT, MD / WALLOPS ISLAND, VA

	NAME	INIT.	DATE
DESIGNED - SCIENTIST	D. FIXSEN		
DRAWN	M. JACKSON		
APPROVED - SCIENTIST	B. SILVERBERG		
APPROVED - SCIENTIST	D. BENFORD		
APPROVED - SCIENTIST	D. FIXSEN		
APPROVED - DEPUTY P.I.	R. BARRY		
APPROVED - P.I.	S. RINEHART		

DRAWING INTERPRETED PER 500-PG-5700.2.5

TITLE: KF 40 HALF NIPPLE, MACHINED, ALUMINUM — 6/4/13

RELEASED FOR FAB. DATE:
EXPECTED DELIVERY DATE:

SIZE	SIZE	DRWG.	REV
B	36FC1	2077457	-

SCALE: 2.000 — SHEET: 1 OF 1

DWG NO. 2077457

GSFC 4-46 (8/07)

FOLD LINE

2077458

REVISION				
REV	ZONE	DESCRIPTION	DATE	APPROVAL
-	-	-	-	-

NOTES UNLESS OTHERWISE SPECIFIED:
1. MATERIIAL: AL ALY TYPE 6061-T6 PLATE
2. NO SURFACE FINISH/TREATMENT REQUIRED
3. INSTALL HELI-COIL THREADED INSERTS IAW NASM33537. BREAK AND REMOVE TANG.
4. ALL RADII ARE R.005 MAX

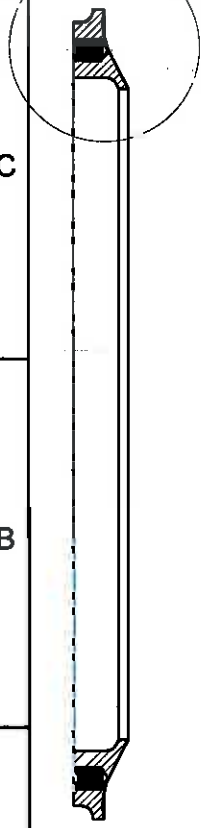

SECTION C-C

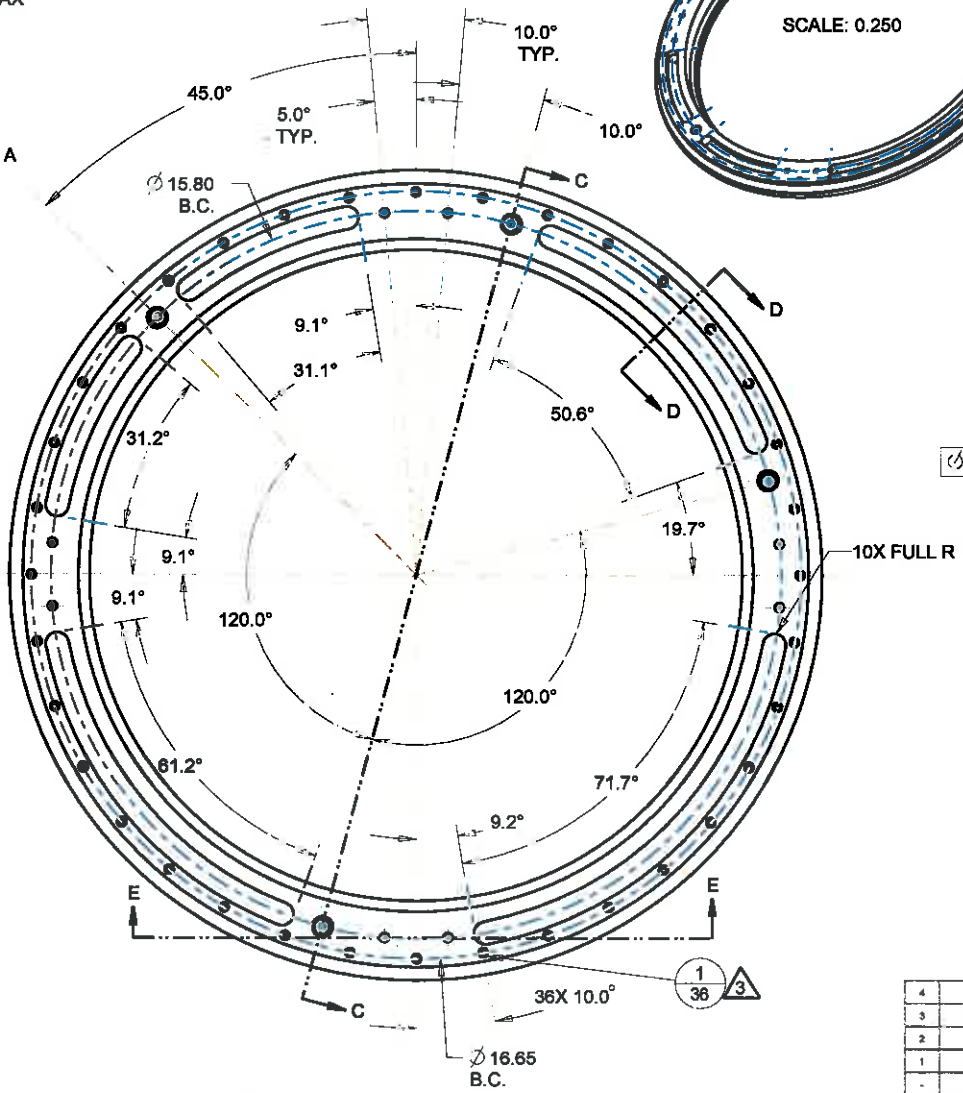

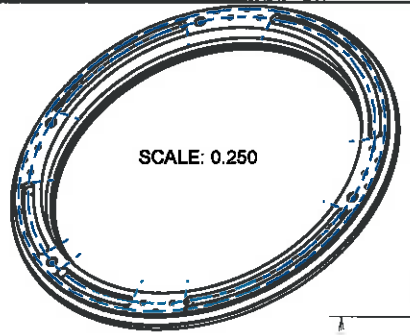

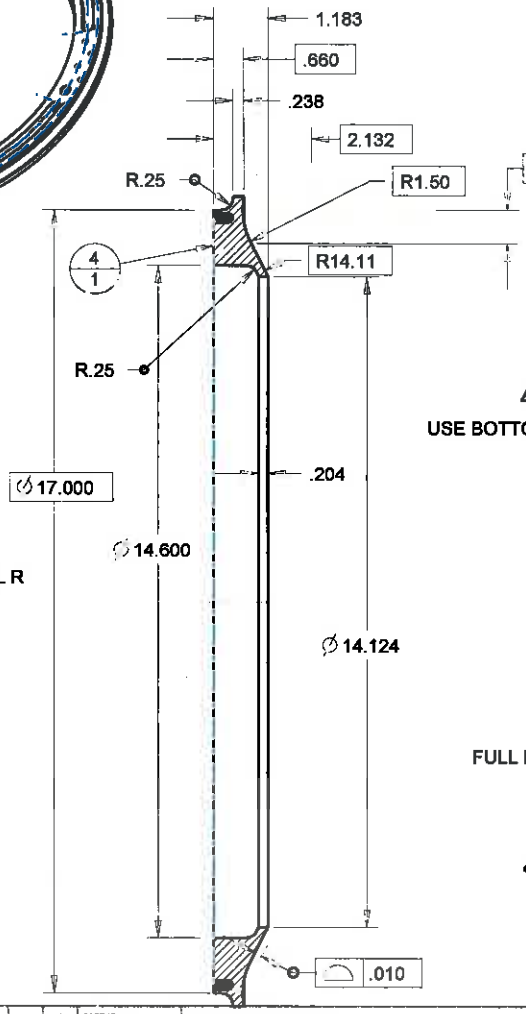

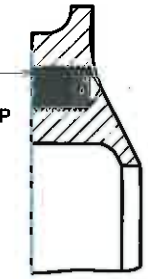

DETAIL A
SCALE 1.000

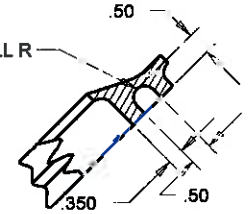

SECTION D-D
SCALE 0.500
5 PLACES

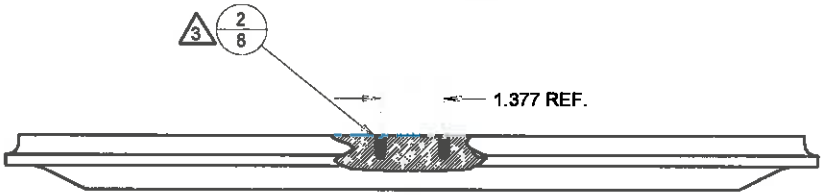

SECTION E-E

ITEM NO.	REQD	REQD	PART NO.	DESCRIPTION	WEIGHT(Lbs)	MATERIAL	MATL SPEC
4		1	2077458-01	MAIN VACUUM SHELL BASE FLANGE	4.374		-
3		4	1185-0EN375	HELI-COIL INSERT, 3/8-16 UNC-2B X .375 LNG, FREE RUNNING,NITRONIC	0.003	NITRONIC	
2		8	1185-2EN328	HELI-COIL INSERT, #8-32 UNC-2B X .328 LNG, FREE RUNNING,NITRONIC	0.001	NITRONIC	
1		36	1185-2EN246	HELI-COIL INSERT, #8-32 UNC-2B X .246 LNG, FREE RUNNING,NITRONIC	0.001	NITRONIC	SEE NOTES 3 & NOTES 5
-		X	2077458	MAIN VACUUM SHELL BASE FLANGE	4.419(TOTAL)		

LIST OF MATERIAL

THIRD ANGLE PROJECTION

INCH — UNLESS OTHERWISE SPECIFIED: REMOVE ALL SHARP EDGES R.010

HYBRID METRIC/INCH

METRIC — UNLESS OTHERWISE SPECIFIED: REMO 'E ALL SHARP EDGES R0.25

PARTS CLASSIFICATION: NON-FLIGHT

SOFTWARE: Pro/ENGINEER CREO 2.0
FILE LOCATION C:\BETTI_RECOVERY_2_25\BETTI_8_26
DRAWING FILE: 2077458 REV -.11
MODEL FILE: 2077458 REV -.22

NATIONAL AERONAUTICS AND SPACE ADMINISTRATION — Goddard Space Flight Center, Greenbelt, Md.

DRAWING INTERPRETED PER 500-PGI-3700 2.3

	NAME	INIT.	DATE
DR. LIB	M. JACKSON		
ENGINEERING TITLE	B. SILVERBERG		
ENGINEER	M. RIZZO		
DRAFTED - SOWNIT	D. BENFORD		
APPROVED - SOWNIT	D. RUSEN		
APPROVED (INTERNAL)	R. BARRY		
APPROVED (NASA)	S. RINEHART		

TITLE
MAIN VACUUM SHELL , BASE FLANGE

RELEASED FOR FAB. DATE:
EXPECTED DELIVERY DATE:

NEXT ASSY	USED ON
2077460	BETTI

SIZE	CODE	DRAWING	REV
C	36FC1	2077458	-

SCALE: 0.500 — SHEET: 1 OF 1

GSFC 4-47 (8/07)

FOLD LINE

NOTES UNLESS OTHERWISE SPECIFIED:
1. ALL DIMENSIONS/TOLERANCES APPLY AFTER WELDING
2. PREFER AUTONOMOUS WELDING WHERE POSSIBLE;
   IF HAND WELDED, WELD IAW NASA-SPEC-5004, PROCESS TO BE DETERMINED
   BY A QUALIFIED WELDER IAW ANSI/AWS D17.1, CLASS C.
3. NO SURFACE TREATMENT/PLATING REQUIRED
4. THIS WELDMENT SHALL HAVE A LEAK REATE OF NOT MORE THAN 1 X 10E-9 CC/SEC
   WITH GREATER THAN 90% HELIUM AT A DIFFERENTIAL OF ONE ATMOSPHERE.
5. PRIOR TO WELDING; CLOCK HOLES TO KF-40 PORTS AS SHOWN. ALIGNMENT/FIXTURE HOLES PERMITTED.
6. ENSURE ALL HELI-COIL INSERTS ACCEPT APPROPRIATE SCREW AFTER WELDING.
7. CUSTOMER WILL INSPECT KF40 ALIGNMENT AT CONTRACTOR FACILITY PRIOR TO ACCEPTANCE.

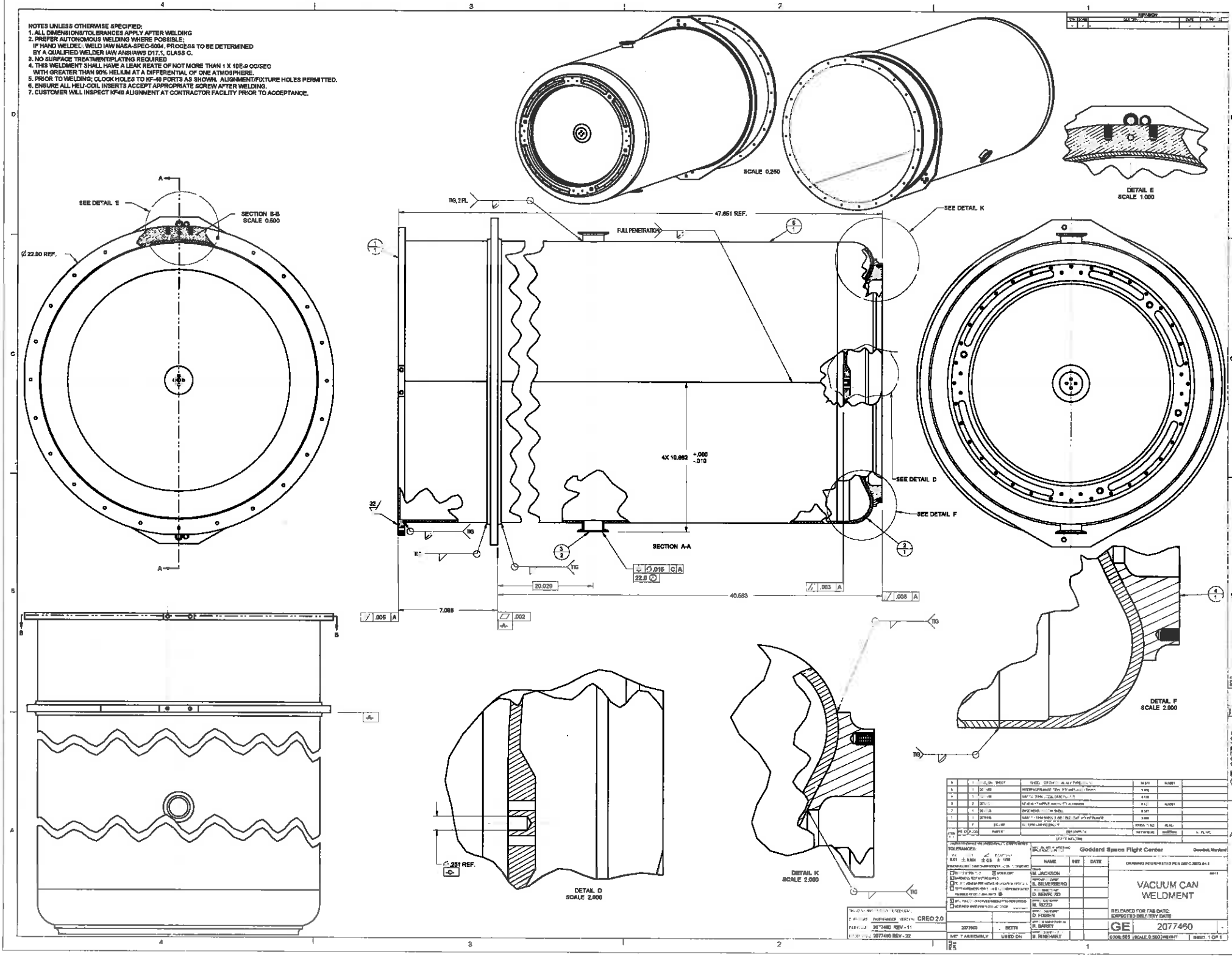

8	1	[illegible]	[illegible]	[illegible]	[illegible]	
6	1	[illegible]	[illegible]	[illegible]		
5	1	[illegible]	[illegible]	[illegible]		
4	1	[illegible]	[illegible]	[illegible]		
3	2	[illegible]	[illegible]	[illegible]	[illegible]	
2	1	[illegible]	[illegible]	[illegible]		
1	1	[illegible]	[illegible]	[illegible]		
ITEM NO.	REQ'D	PART NO.	DESCRIPTION	MATERIAL	[illegible]	

TOLERANCES:
[illegible]

Goddard Space Flight Center — Greenbelt, Maryland

	NAME	INIT	DATE
DRAWN	M. JACKSON		
REPRODUCIBLE	S. BUTVERBERG		
[illegible]	D. BENNICKO		
[illegible]	M. RIZZO		
[illegible]	D. FIXSEN		
[illegible]	R. BARRY		
[illegible]	W. RINEHART		

DRAWING INTERPRETED PER GSFC SPEC 5-1

VACUUM CAN WELDMENT

RELEASED FOR FAB DATE:
EXPECTED DELIVERY DATE:

GE 2077460

CODE 565 | SCALE 0.500 | WEIGHT: | SHEET 1 OF 1

2077500 | BETTR | NEXT ASSEMBLY | USED ON

CREO 2.0
2077460 REV - 11
2077460 REV - 22

REVISION

SYM.	ZONE	REVISION	DATE	APPR.

GE 2077460

NOTES UNLESS OTHERWISE SPECIFIED:
1. MATERIAL: AL ALY TYPE 6061-T6
2. NO SURFACE TREATMENT/PLATING REQUIRED
3. ALL RADII ARE R.005 MAX
4. INSTALL HELICAL THREADED INSERT IAW NASM33537

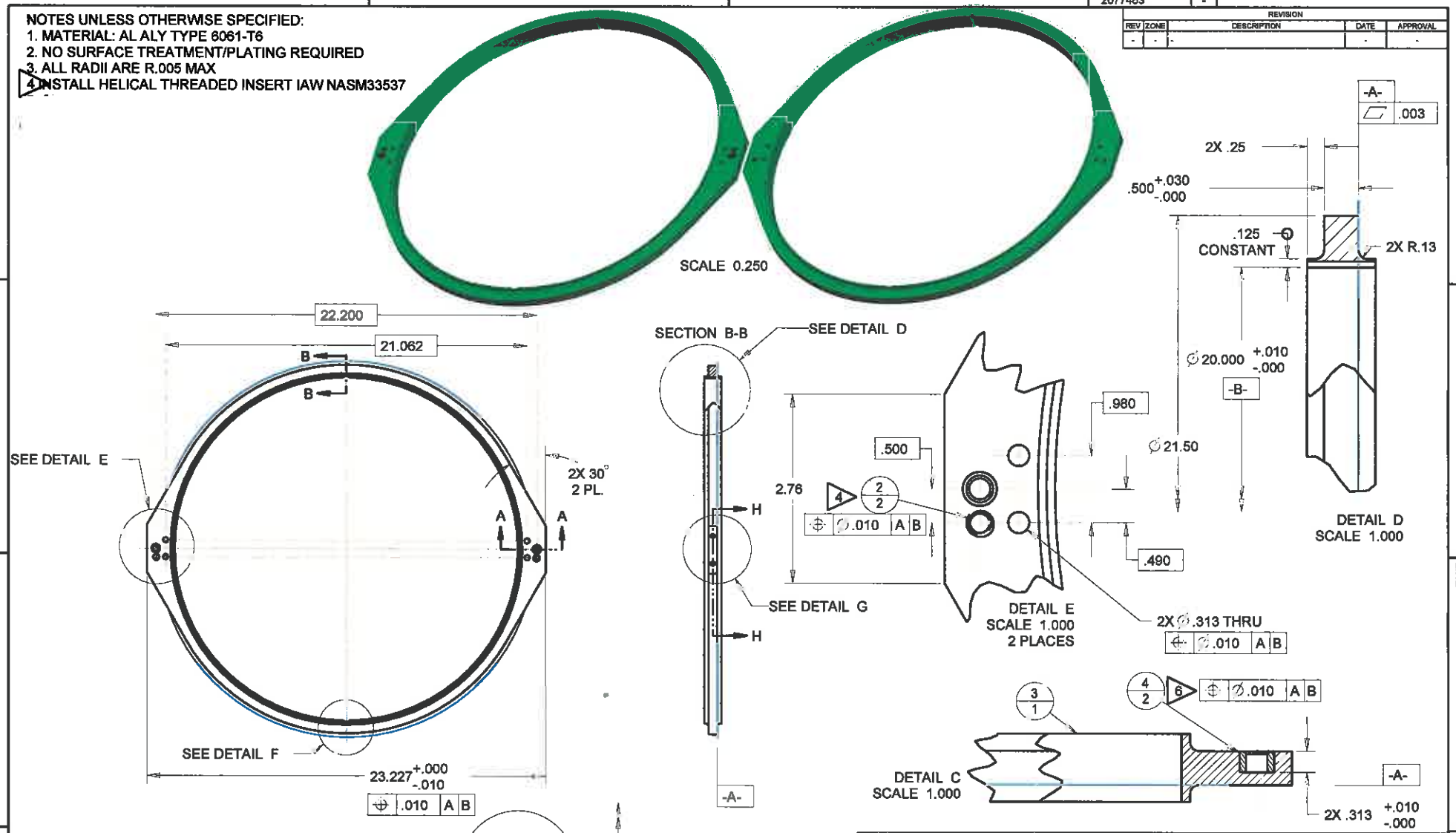

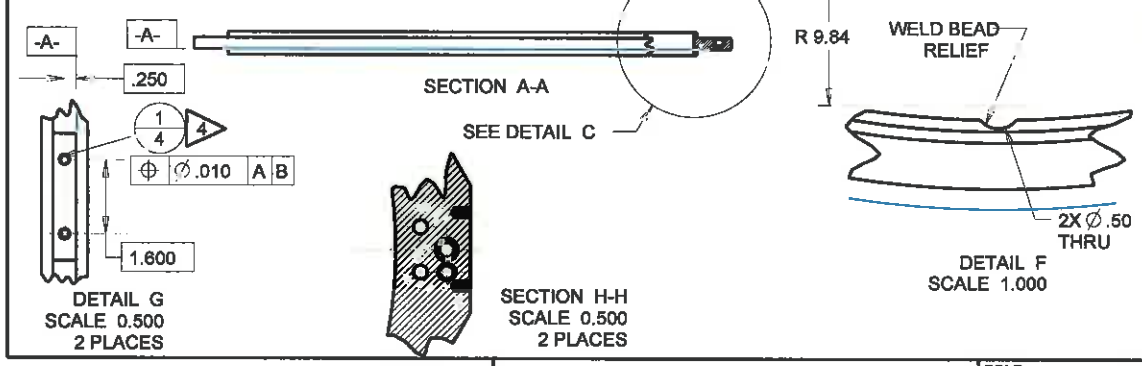

ITEM NO.	REQD	REQD	PART NO.	DESCRIPTION	WEIGHT(Lbf)	MATERIAL	MAT'L SPEC
4		2	L-32-5	LINER BUSHING, CRES, 0.500 O.D., 5/16 I.D. X 5/16 LNG	0.010	SS	SEE NOTE 7
3		1	2077463-01	INTERFACE FLANGE, DEWAR TO METERING TRUSS	3.277	AL6061	-
2		2	1185-5EN469	HELI-COIL INSERT, 5/16-18 UNC-2B X .469 LNG, FREE RUNNING,NITRONIC	0.003	NITRONIC	SEE NOTE 4 & 5
1		4	1185-3EN190	HELI-COIL INSERT, #10-32 UNF-2B X .190 LNG, FREE RUNNING,NITRONIC	0.001	NITRONIC	SEE NOTE 4 & 5
-		X	2077463	INTERFACE FLANGE, DEWAR TO METERING TRUSS	3.305 (TOTAL)		

LIST OF MATERIAL

THIRD ANGLE PROJECTION

INCH

HYBRID METRIC/INCH

METRIC

HARDWARE CLASSIFICATION NON-FLIGHT

UNLESS OTHERWISE SPECIFIED: REMOVE ALL SHARP EDGES R.010

UNLESS OTHERWISE SPECIFIED: REMOVE ALL SHARP EDGES R0.25

NATIONAL AERONAUTICS AND SPACE ADMINISTRATION — Goddard Space Flight Center, Greenbelt, Md.

DRAWING INTERPRETED PER 500-PG-6700.2.5

NAME	INIT.	DATE
M. JACKSON		
B. SILVERBERG		
M. RIZZO		
D. BENFORD		
D. FIXSEN		
R. BARRY		
S. RINEHART		

TITLE 6/4/13

INTERFACE FLANGE, DEWAR TO METERING TRUSS

RELEASED FOR FAB. DATE:
EXPECTED DELIVERY DATE:

SOFTWARE: Pro/ENGINEER CREO 2.0
FILE LOCATION: C:\BETTII_RECOVERY_2_25\BETTII_5_25
DRAWING FILE: 2077463 REV -.11
MODEL FILE: 2077463 REV -.22

NEXT ASSY	USED ON
2077460	BETTII

SIZE C | CODE 36FC1 | DWG NO. 2077463 | REV -

SCALE: 0.250 | SHEET: 1 OF 1

GSFC 4-47 (8/07)

FOLD LINE

2077465

REVISION				
REV	ZONE	DESCRIPTION	DATE	APPROVAL
-	-	-	-	-

NOTES: UNLESS OTHERWISE SPECIFIED:
1. MATERIAL: AL ALY TYPE 6061-T6 REF.
2. ALL RADII ARE R.005 MAX
3. NO SURFACE TREATMENT/PLATING REQUIRED
4. BAG AND TAG PART WITH APPROPRIATE DASH NO.

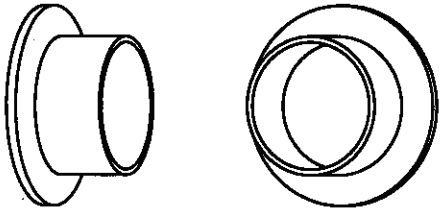

QUANTITY: 2

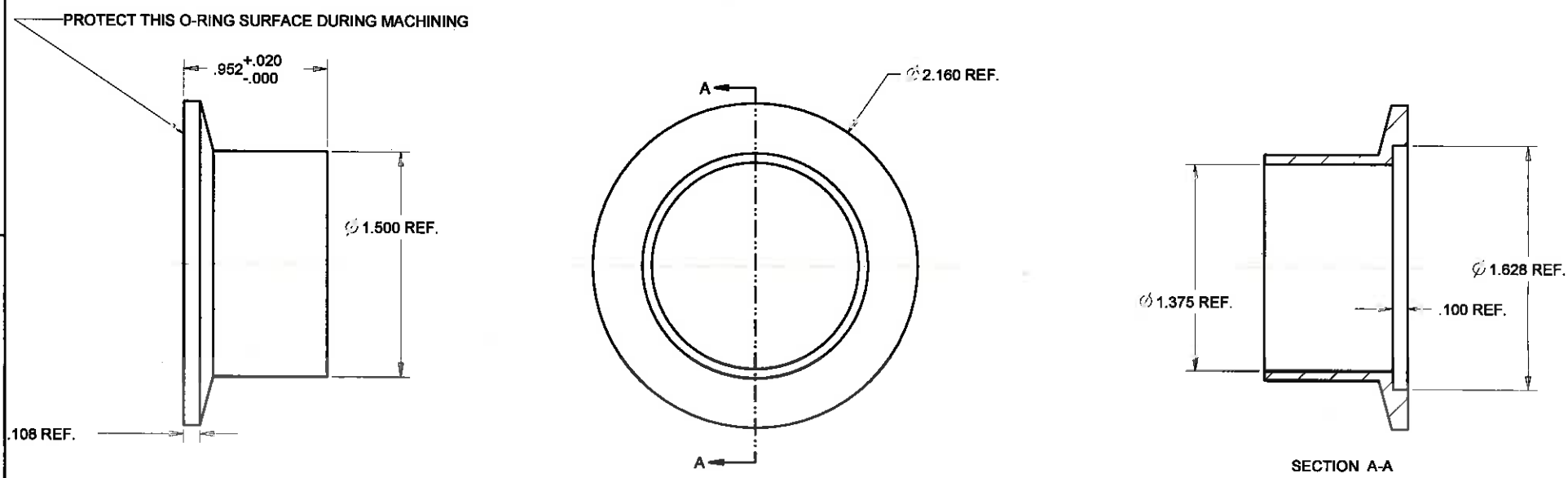

ITEM NO.	REQD	REQD	PART NO.	DESCRIPTION	WEIGHT(Lbf)	MATERIAL	MAT'L SPEC
—		—	QF40-150-LFA	KF 40 HALF NIPPLE, TOP PLATE, MAIN VACUUM SHELL	0.064 (TOTAL)	AL TYPE 6061	SEE NOTE 5

LIST OF MATERIAL

THIRD ANGLE PROJECTION

INCH — HYBRID METRIC/INCH — METRIC

HARDWARE CLASSIFICATION: NON-FLIGHT

UNLESS OTHERWISE SPECIFIED REMOVE ALL SHARP EDGES R.010

UNLESS OTHERWISE SPECIFIED REMOVE ALL SHARP EDGES R.010

NATIONAL AERONAUTICS AND SPACE ADMINISTRATION — Goddard Space Flight Center, Greenbelt, Md.

NAME	INIT.	DATE
M. JACKSON		
B. SILVERBERG		
M. RIZZO		
D. BENFORD		
D. FIXSEN		
R. BARRY		
S. RINEHART		

DRAWING INTERPRETED PER 800-PG-8700 2.5

TITLE 1/18/12

KF 40 HALF NIPPLE, TOP PLATE, MAIN VACUUM SHELL

RELEASED FOR FAB. DATE: EXPECTED DELIVERY DATE:

SOFTWARE: Pro/ENGINEER CREO 2.0

FILE LOCATION: C:/BETTI_RECOVERY_2_25/BETTII_8_25

DRAWING FILE: 2077465 REV .

MODEL FILE: 2077465 REV .

NEXT ASSY	USED ON
2077440	BETTII

C 36FC1 2077465

SCALE: 2.000 SHEET: 1 OF 1

GSFC 4-47 (8/07)

FOLD LINE