NOTICE - WHEN GOVERNMENT DRAWINGS, SPECIFICATIONS, OR OTHER DATA ARE USED FOR ANY PURPOSE OTHER THAN IN CONNECTION WITH A DEFINITELY RELATED GOVERNMENT PROCUREMENT OPERATION, THE UNITED STATES GOVERNMENT THEREBY INCURS NO RESPONSIBILITY NOR OBLIGATION WHATSOEVER; AND THE FACT THAT THE GOVERNMENT MAY HAVE FORMULATED, FURNISHED, OR IN ANY WAY SUPPLIED THE SAID DRAWINGS, SPECIFICATIONS OR OTHER DATA IS NOT TO BE REGARDED BY IMPLICATION OR OTHERWISE AS IN ANY MANNER LICENSING THE HOLDER OR ANY OTHER PERSON OR CORPORATION, OR CONVEYING ANY RIGHTS OR PERMISSION TO MANUFACTURE, USE, OR SELL ANY PATENTED INVENTION THAT MAY IN ANY WAY BE RELATED THERETO.

THE INFORMATION CONTAINED IN THE DOCUMENT IS TECHNICAL IN CONTENT, BUT IS NOT TECHNICAL DATA AS DEFINED BY THE ITAR OR THE EAR, AND THEREFORE IS EAR 99 NLR (NO EXPORT LICENSE REQUIRED). [GENERAL PROHIBITION SIX (EMBARGO) APPLIES TO ALL ITEMS SUBJECT TO THE EAR, I.E. ITEMS ON THE CCL AND WITHIN EAR 99 NLR. YOU MAY NOT MAKE AN EXPORT OR RE-EXPORT CONTRARY TO THE PROVISIONS OF PART 746 (EMBARGOS AND OTHER SPECIAL CONTROLS) OF THE EAR AND 22 CFR PART 126.1 OF THE ITAR.]

EDDR #: 1312452

EAR 99 NLR

REVISION HISTORY			
REV	DESCRIPTION	DATE	APPROVAL

NOTES:

GENERAL

1A. INTERPRET THIS DRAWING PER ASME Y14.5M-2009.

1B. THIS DRAWING PROVIDES THE PHYSICAL DIMENSIONS AND PARTS LIST FOR PIPE SPOOL ASSEMBLIES. REFER TO PROCUREMENT SPECIFICATION K0000146863 FOR TECHNICAL, FABRICATION, TEST AND INSPECTION REQUIREMENTS.

1C. NOTED DIMENSIONS INDICATES MAXIMUM ALLOWABLE LENGTHS.

1D. THE NOMINAL PIPE SIZE FOR THE INNER PIPE IN THIS DRAWING IS 3 INCHES SCHEDULE 10, WHICH IS NOT SHOWN. THE NOMINAL PIPE SIZE FOR THE OUTER PIPE IS 5 INCHES SCHEDULE 10.

1E. INNER LINE PIPE COMPONENT AT THE INDICATED LOCATION IS SPECIFIED IN THE BILL OF MATERIALS, BUT NOT SHOWN.

MARKING

2A. STENCIL TEXT PART NUMBER, WEIGHT, LOCATION OF CENTER GRAVITY AND LIFTING/SHIPPING SUPPORT LOCATIONS PER COMMERICAL STANDARDS.

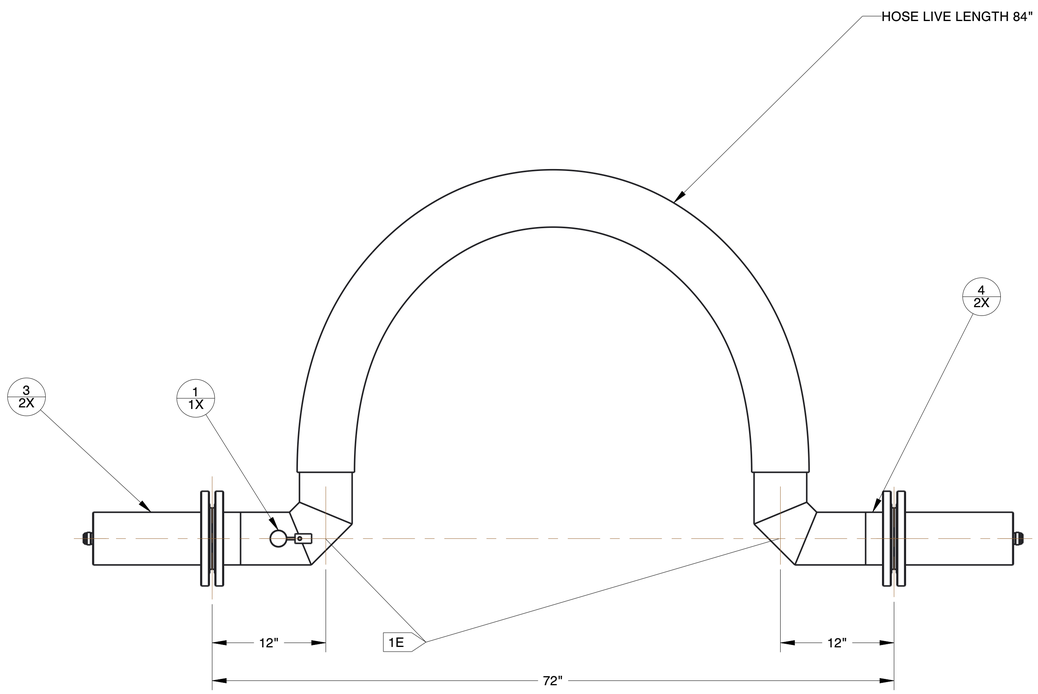

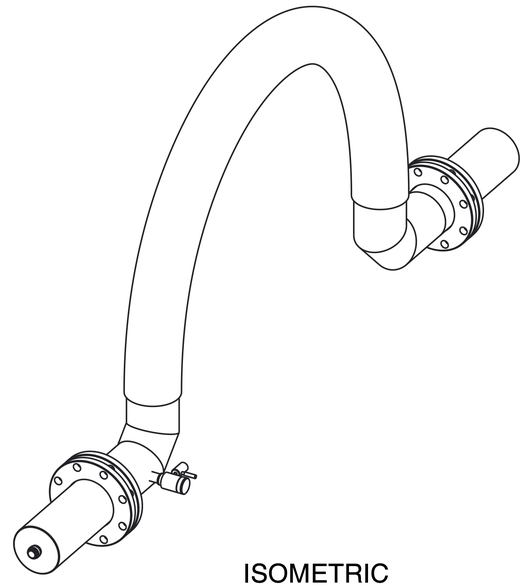

ISOMETRIC

QTY	ZONE	FIND NO OR ITEM NO	MFR CODE	PART OR STOCK NO	DESCRIPTION
2		4	35795	F-BMCTPS24X	BAYONET, MALE, 3X5, CPC-CRYOLAB
2		3	35795	F-BMCTPS24S	CAP, BAYONET, MALE, 3 X 5, WITH PURGE PORT, CPC-CRYOLAB
1E 2		2	05047		ELBOW, LONG, ASME B16.9, NPS 3, SCHED 10, ASTM A403
1		1	22264	79K14672-3	ASSEMBLY, VACUUM VALVE

PARTS LIST

CAD MAINTAINED. CHANGES SHALL BE INCORPORATED ONLY BY THE DESIGN ACTIVITY.

SOFTWARE: CREO ELEMENTS/PRO 5.0
FILENAME: K0000071336D
MATERIAL:
HEAT TREATMENT:
FINAL PROTECTIVE FINISH:

NEXT ASSY | USED ON
APPLICATION

UNLESS OTHERWISE SPECIFIED DIM ARE IN INCHES. INTERPRET DIM AND TOL PER ASME Y14.5M-2009. TOLERANCES ON:
FRACTIONS ± 1/8
DECIMALS 1 PL ±.1, 2 PL ±.03, 3 PL ±.010
ANGLES 1 PL ±.5

THIRD ANGLE PROJECTION

ORIGINAL DATE OF DRAWING (YY/MM/DD) 13/05/21
DRAFTSMAN: L. F. LOCANTE
CHECKER: J. A. STAGI
ENGINEER: S. A. BRYANT
CHECKER:
ENGINEER: D. A. REWINKEL
STRESS:
ENGINEER: J. G. GADDONE
SUBMITTED: T. O. ADAMS
APPROVED: E. A. THAXTON

JOHN F. KENNEDY SPACE CENTER, NASA
KENNEDY SPACE CENTER, FLORIDA

FLEX HOSE 6320, VAC JKT 3X5, CRYOGENIC PROPELLANT

SIZE	CAGE CODE	DWG NO	REV
D	22264	K0000071336	-

SCALE .125 | UNIT WEIGHT 180.54 | SHEET 1 OF 1

DWG NO K0000071336 | SHEET 1 | REV -

EAR 99 NLR