NOTICE - WHEN GOVERNMENT DRAWINGS, SPECIFICATIONS, OR OTHER DATA ARE USED FOR ANY PURPOSE OTHER THAN IN CONNECTION WITH A DEFINITELY RELATED GOVERNMENT PROCUREMENT OPERATION, THE UNITED STATES GOVERNMENT THEREBY INCURS NO RESPONSIBILITY NOR ANY OBLIGATION WHATSOEVER; AND THE FACT THAT THE GOVERNMENT MAY HAVE FORMULATED, FURNISHED, OR IN ANY WAY SUPPLIED THE SAID DRAWINGS, SPECIFICATIONS OR OTHER DATA IS NOT TO BE REGARDED BY IMPLICATION OR OTHERWISE AS IN ANY MANNER LICENSING THE HOLDER OR ANY OTHER PERSON OR CORPORATION, OR CONVEYING ANY RIGHTS OR PERMISSION TO MANUFACTURE, USE, OR SELL ANY PATENTED INVENTION THAT MAY IN ANY WAY BE RELATED THERETO.

THE INFORMATION CONTAINED IN THE DOCUMENT IS TECHNICAL IN CONTENT, BUT IS NOT TECHNICAL DATA AS DEFINED BY THE ITAR OR THE EAR, AND THEREFORE, THE ITAR OR THE EAR DO NOT APPLY. HOWEVER, THE EXPORT PROHIBITION SIN (EMBARGO) APPLIES TO ALL ITEMS SUBJECT TO THE EAR, I.E., ITEMS ON THE CCL AND WITHIN EAR 99 NLR. YOU MAY NOT MAKE AN EXPORT OR RE-EXPORT CONTRARY TO THE PROVISIONS OF PART 746 (EMBARGOS AND OTHER SPECIAL CONTROLS) OF THE EAR AND 22 CFR PART 126.1 OF THE ITAR.]

ECDR #: 1311478

EAR 99 NLR

REVISION HISTORY					
PART NO.	ZONE	REV	DESCRIPTION	DATE	APPROVAL

NOTES:

GENERAL

1A. INTERPRET THIS DRAWING PER ASME Y14.5-2009.

1B. THIS DRAWING PROVIDES THE PHYSICAL DIMENSIONS AND PARTS LIST FOR PIPE SPOOL ASSEMBLY. REFER TO PROCUREMENT SPECIFICATION K0000146597 FOR TECHNICAL, FABRICATION, TEST AND INSPECTION REQUIREMENTS.

1C NOTED DIMENSION INDICATES CENTER LINE LOCATION FOR EXTERNAL SUPPORTS OF PIPE SPOOL ASSEMBLY. SUPPORT CONTACTS PIPE SPOOL FOR 2.0 INCHES ON EACH SIDE OF NOTED DIMENSION. WELDS ON EXTERNAL PIPE (EXCEPT PIPE SEAM WELD IF APPLICABLE) SHALL BE AVOIDED IN THIS AREA.

1D NOTED DIMENSION INDICATES NOMINAL LENGTH OF INNER PIPE REQUIRED AT NEXT LEVEL OF ASSEMBLY. ADDITIONAL LENGTH OF INNER PIPE AND PACKAGING CLOSE-OUT MUST BE ADDED DURING FABRICATION PER SPECIFICATION REQUIREMENT.

1E NOTED DIMENSION INDICATES MAXIMUM ALLOWABLE LENGTH OF FIELD WELDED TRANSITION JOINT. SEE SPECIFICATION FOR TRANSITION JOINT REQUIREMENT.

1F. PIPE SPOOL REFERENCE DESIGNATOR NUMBER IS 4180.

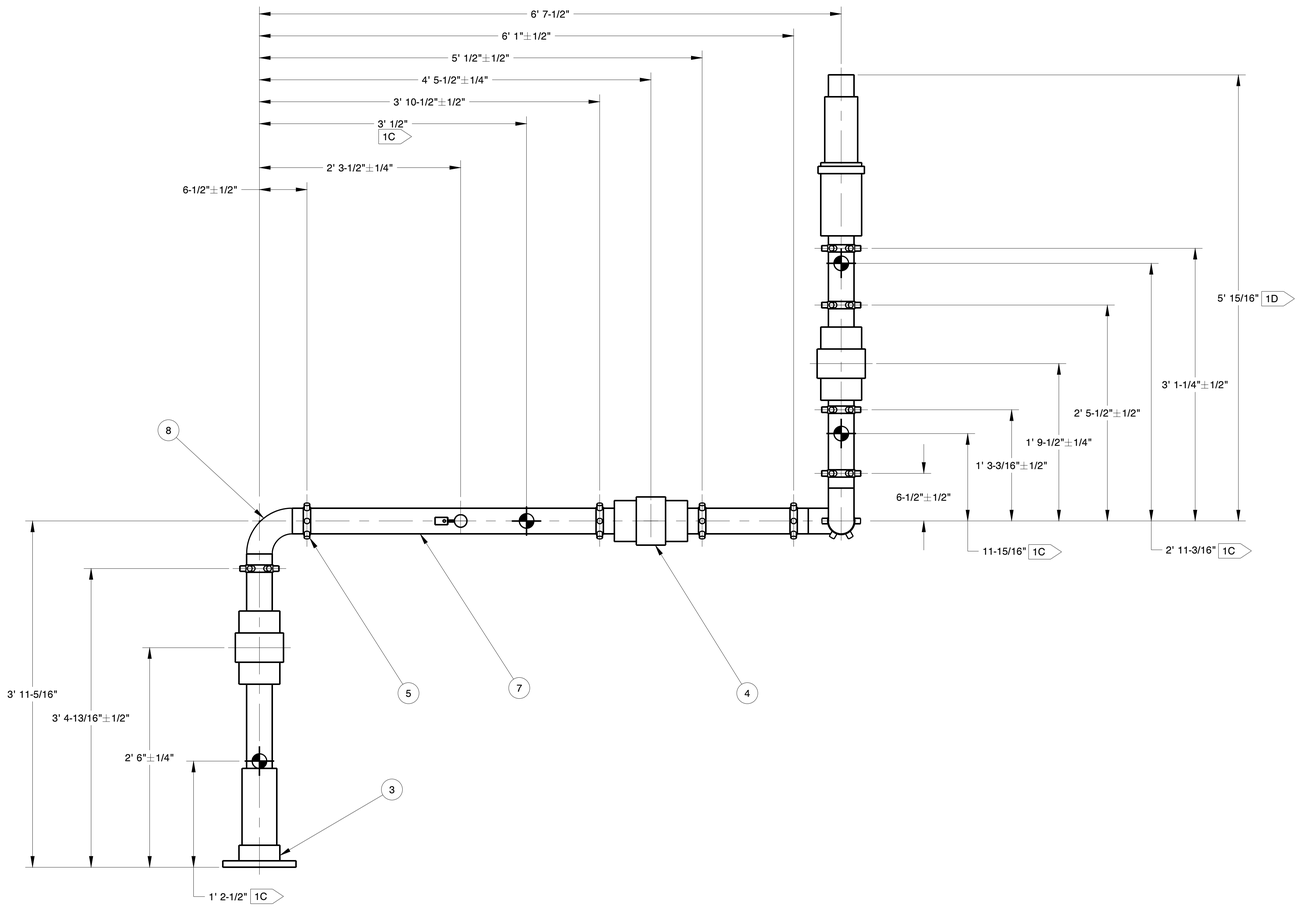

OUTER JACKET REMOVED

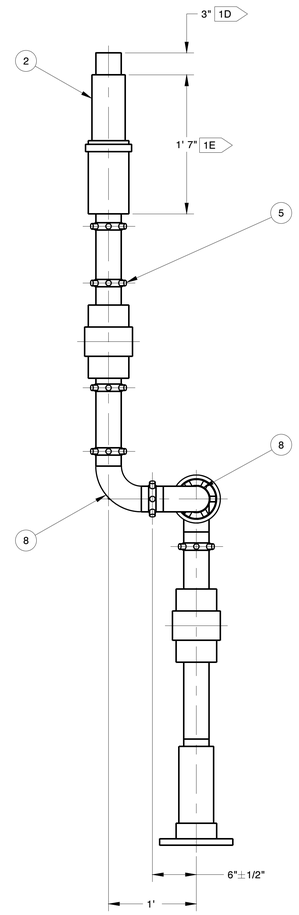

OUTER JACKET REMOVED

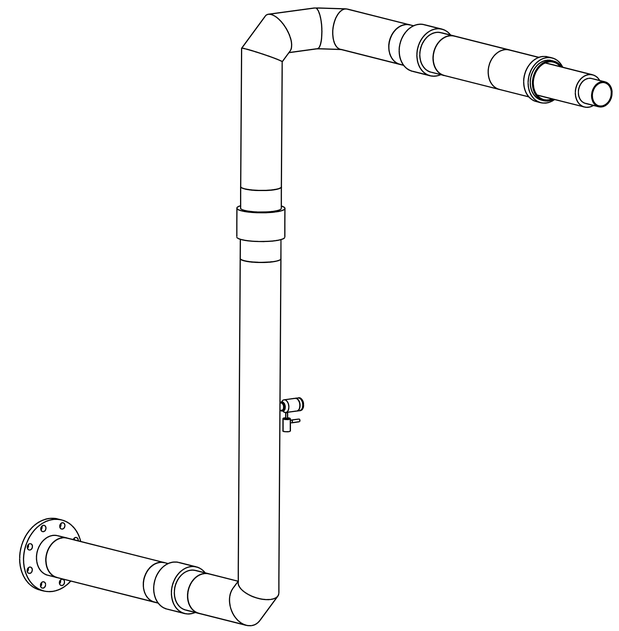

ISOMETRIC

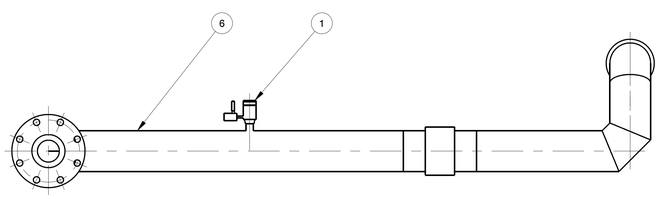

QTY	FIND NO OR ITEM NO	DESCRIPTION
3	8	ELBOW, 90 DEG, LONG, B16.9, SCHED 10
AR	7	PIPE 3 NPS, SCHED 10, ASTM A312
AR	6	PIPE 5 NPS, SCHED 10, ASTM A312
10	5	SUPPORT, INTERNAL PIPE
3	4	BELLOWS 5 NPS 10 LG CONVOLUTE 4 LG
1	3	BAYONET, FEMALE, 3X5
1	2	TRANSITION JOINT, 3X5 FIELD WELDED
1	1	ASSEMBLY, VACUUM VALVE

PARTS LIST

DWG NO K0000065256 SHEET 1 REV -

PROCUREMENT CONTROL DRAWING

CAD MAINTAINED. CHANGES SHALL BE INCORPORATED ONLY BY THE DESIGN ACTIVITY.

SOFTWARE: PRO/ENGINEER
FILENAME: K0000065256D
MATERIAL: NOTED
HEAT TREATMENT: --
FINAL PROTECTIVE FINISH: --

K0000061124	SLS ML
NEXT ASSY	USED ON
APPLICATION	

UNLESS OTHERWISE SPECIFIED DIMENSIONS ARE IN INCHES. INTERPRET DIMENSIONS AND TOLERANCES PER ASME Y14.5M-1994. TOLERANCES ON:

FRACTIONS	DECIMALS	ANGLES
±1/16	1 PL ±.060 2 PL ±.030 3 PL ±.010	1 PL ±1°

THIRD ANGLE PROJECTION

ORIGINAL DATE OF DRAWING (YY/MM/DD) 2013/03/11
DRAFTSMAN: D. C. STANIFER — CHECKER: J. A. STAGI
ENGINEER: W. C. PATRICK — CHECKER: L.C. KAYLOR
ENGINEER: J. K. TUCKERMAN — STRESS: V.J. WARD
ENGINEER: C. T. OCONNOR
SUBMITTED: T. O. ADAMS
APPROVED: A. C. LITTLEFIELD

JOHN F. KENNEDY SPACE CENTER, NASA
KENNEDY SPACE CENTER, FLORIDA

SPOOL 3 X 5, VACUUM JACKET PIPE, LIQUID OXYGEN, FILL DRAIN

SIZE	CAGE CODE	DWG NO	REV
E	22264	K0000065256	-

SCALE .125 | UNIT WEIGHT 231.98 | SHEET 1 OF 1

EAR 99 NLR

K0000065256D - 23, RELEASED, Verify Latest Revision in KDDMS
KSC FORM 21-5 NS (REV 9/00)