NOTICE -- WHEN GOVERNMENT DRAWINGS, SPECIFICATIONS, OR OTHER DATA ARE USED FOR ANY PURPOSE OTHER THAN IN CONNECTION WITH A DEFINITELY RELATED GOVERNMENT PROCUREMENT OPERATION, THE UNITED STATES GOVERNMENT THEREBY INCURS NO RESPONSIBILITY NOR ANY OBLIGATION WHATSOEVER; AND THE FACT THAT THE GOVERNMENT MAY HAVE FORMULATED, FURNISHED, OR IN ANY WAY SUPPLIED THE SAID DRAWINGS, SPECIFICATIONS, OR OTHER DATA IS NOT TO BE REGARDED BY IMPLICATION OR OTHERWISE IN ANY MANNER CONSTRUED, THE HOLDER OR ANY PERSON OR CORPORATION, OR CONVEYING ANY RIGHTS OR PERMISSION TO MANUFACTURE, USE, OR SELL ANY PATENTED INVENTION THAT IN ANY WAY BE RELATED THERETO.

LAUNCH COMPLEX 39
VEHICLE ASSEMBLY BUILDING
MODIFY VEHICLE ASSEMBLY BUILDING
HIGH BAY 3 FOR SLS - HOISTS

NATIONAL AERONAUTICS AND
SPACE ADMINISTRATION

John F. Kennedy Space Center
Kennedy Space Center, Florida 32899

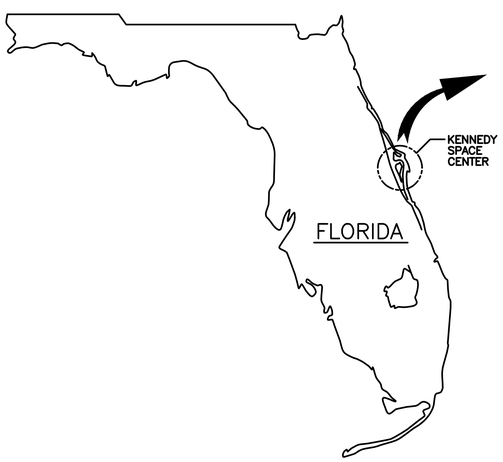

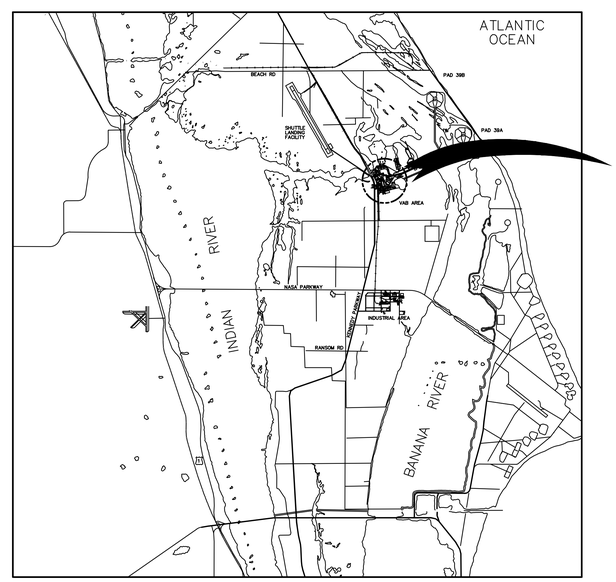

N
AREA MAP
NO SCALE

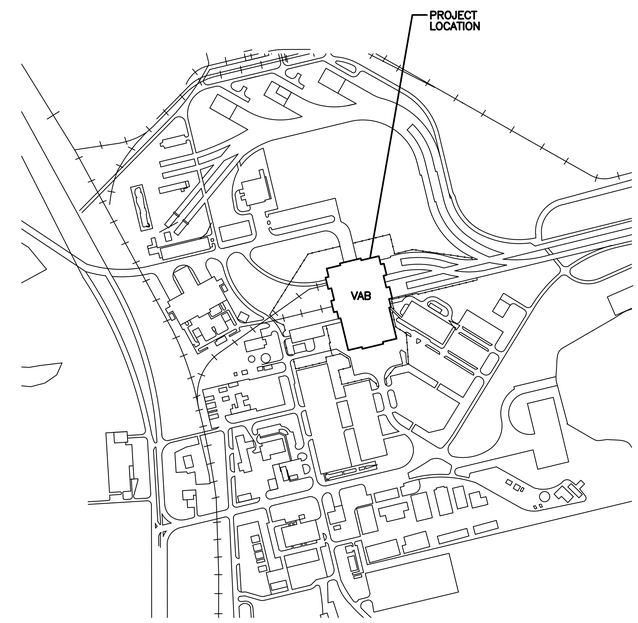

N
LOCATION MAP
NO SCALE

TECHNICAL SPECIFICATION No. 79K39668
DATA MANUAL: KSC-TA-12243
DATE: AUGUST 20, 2013

ASBESTOS IDENTIFIED
☒ YES ☐ NO

IF THE CONTRACTOR SUSPECTS THE PRESENCE OF ANY ASBESTOS CONTAMINATED MATERIAL NOT IDENTIFIED ON THESE DRAWINGS, BUT IS REQUIRED TO BE DISTURBED TO PERFORM THE CONTRACT WORK, INFORM THE CONTRACTING OFFICER AT ONCE.

HEAVY METALS IDENTIFIED
☒ YES ☐ NO

IF THE CONTRACTOR SUSPECTS THE PRESENCE OF ANY HEAVY METAL COATING MATERIAL NOT IDENTIFIED ON THESE DRAWINGS, BUT IS REQUIRED TO BE DISTURBED TO PERFORM THE CONTRACT WORK, INFORM THE CONTRACTING OFFICER AT ONCE.

DOCUMENT INFORMATION: (TITLE, NUMBER, REV, DATE)

MODIFY VEHICLE ASSEMBLY BUILDING HIGH BAY 3 FOR SLS – HOISTS,
PCN 9000.5, REV BASIC, AUGUST 20, 2013

Sensitive But Unclassified (SBU)
INSTRUCTIONS: This item must be reviewed under the requirements for "Sensitive But Unclassified Information" as described in NPR 1600.1, Chapter 5.

http://nodis-dms.gsfc.nasa.gov/

Document contains SBU?	Yes	No	SBU Reviewer's signature	Date	Company / Org
	☐	☒			

Export Control (EC)
INSTRUCTIONS: Attach the document requiring an export determination. Contact the KSC ECO Help Desk (867-9209) for help in completing this form.

http://exportcontrol.ksc.nasa.gov/

Contractor EC Reviewer's Name and Organization	Contractor EC Reviewer's signature	Date

NASA ECO Reviewer's Name and Organization	NASA ECO Reviewer's signature	Date

	EXPORT DETERMINATION (Check one box only)	
EAR 99	☐ NLR	The information contained in the document is technical in content, but is not technical data as defined by the ITAR or the EAR, and therefore is EAR 99 NLR (no export license required). [General Prohibition Six (Embargo) applies to all items subject to the EAR, i.e. items on the CCL and within EAR 99-NLR. You may not make an export or re-export contrary to the provisions of part 746 (Embargos and Other Special Controls) of the EAR and 22 CFR part 126.1 of the ITAR.]
EAR Controlled	☐	This document is within the purview of the Export Administration Regulations (EAR), 15 CFR 730-774, and is export controlled. It may not be transferred to foreign nationals in the U.S. or abroad without specific approval of a Knowledgeable NASA export control official, and/or unless an export license or license exception is obtained/available from the Bureau of Industry and Security, United States Department of Commerce. Violations of these regulations are punishable by fine, imprisonment, or both.
ITAR Controlled	☐	This document contains information which falls under the purview of the U.S. Munitions List (USML), as defined in the International Traffic in Arms Regulations (ITAR), 22 CFR 120-130, and is export controlled. It shall not be transferred to foreign nationals, in the U.S. or abroad, without specific approval of a knowledgeable NASA export control official, and/or unless an export license or license exemption is obtained/available from the United States Department of State. Violations of these regulations are punishable by fine, imprisonment, or both.

KSC FORM 7-657V2 NS (REV 09/11) PREVIOUS EDITIONS ARE OBSOLETE

SYM	ZONE	DESCRIPTION	DATE	APPROVAL
		REVISIONS		

RS&H IMPROVING YOUR WORLD
Reynolds, Smith and Hills, Inc.
115 Alma Blvd, Suite 101
Merritt Island, Florida 32953-4101
(321) 453-0212 (321) 453-0223 FAX
www.rsandh.com

SIGNATURES		DATE
DRAWN:	JOSEPH HAUER	08-19-2013
CHECKED:	RICHARD PRUSS	08-19-2013
SUBMITTED:	ROBERT PRUSS	
APPROVED:	JOHN KERCSMAR	
	SONIA MILLER	
	WALLACE SCHROEDER	

NATIONAL AERONAUTICS AND SPACE ADMINISTRATION
JOHN F. KENNEDY SPACE CENTER, NASA
KENNEDY SPACE CENTER, FLORIDA

LAUNCH COMPLEX 39
VEHICLE ASSEMBLY BUILDING
MODIFY VEHICLE ASSEMBLY BUILDING
HIGH BAY 3 FOR SLS – HOISTS

COVER SHEET

FILE NO.	SIZE	DWG. NO.	REV
302-6058-043	E	79K39667	

PROJ. NO. PCN 99000.5 SHEET 1 OF 43

WHEN PRINTED FULL SIZE, THIS SHEET IS 34"X44"
THIS COMPUTER DRAWING WAS
CREATED IN AUTOCAD AND
FILED UNDER THE DRAWING NUMBER

V-001

NOTICE -- WHEN GOVERNMENT DRAWINGS, SPECIFICATIONS, OR OTHER DATA ARE USED FOR ANY PURPOSE OTHER THAN IN CONNECTION WITH A DEFINITELY RELATED GOVERNMENT PROCUREMENT OPERATION, THE UNITED STATES GOVERNMENT THEREBY INCURS NO RESPONSIBILITY NOR ANY OBLIGATION WHATSOEVER; AND THE FACT THAT THE GOVERNMENT MAY HAVE FORMULATED, FURNISHED, OR IN ANY WAY SUPPLIED THE SAID DRAWINGS, SPECIFICATIONS, OR OTHER DATA IS NOT TO BE REGARDED BY IMPLICATION OR OTHERWISE IN ANY MANNER CONSTRUED, AS LICENSING THE HOLDER, OR ANY OTHER PERSON OR CORPORATION; OR CONVEYING ANY RIGHTS OR PERMISSION TO MANUFACTURE, USE, OR SELL ANY PATENTED INVENTION THAT IN ANY WAY BE RELATED THERETO.

DRAWING INDEX

SHEET NUMBER	FUNCTION CODE	REVISION STATUS	SHEET TITLE
			GENERAL
1	V–001		COVER SHEET
2	V–002		DRAWING INDEX, GENERAL SYMBOLS AND ABBREVIATIONS
3	V–003		WORK LAYDOWN LOCATIONS
			ENVIRONMENTAL
4	EN–001		METALS AND PCB SCHEDULES AND NOTES
			ARCHITECTURAL
5	A–001		ARCHITECTURAL ABBREVIATIONS, SYMBOLS AND GENERAL NOTES
6	AD–136		LEVEL 36 – DEMOLITION PLAN
7	A–135		LEVEL 35 PLAN
8	A–136		LEVEL 36 PLAN
9	A–500		ENLARGED PLATFORM PLANS, LEVEL 35
10	A–501		ENLARGED PLATFORM PLANS, LEVEL 36
11	A–502		GUARDRAIL ELEVATIONS AND DETAILS
12	A–503		GUARDRAIL ELEVATIONS AND DETAILS
13	A–504		GUARDRAIL ELEVATIONS
14	A–505		LADDER DETAILS
15	A–506		SECURITY FENCE PLAN LEVELS 32 AND 34
			STRUCTURAL
16	S–001		STRUCTURAL GENERAL NOTES
17	S–135		PLAN LEVEL 35
18	S–136		PLAN LEVEL 36
19	S–137		PLAN LEVEL 37
20	S–401		ENLARGED FRAMING PLAN LEVEL 35
21	S–402		ENLARGED FRAMING PLAN AND ELEVATIONS LEVEL 36
22	S–501		STRUCTURAL DETAILS – 1
23	S–502		STRUCTURAL DETAILS – 2
24	S–503		REMOVABLE GUARDRAIL BASE DETAIL
			MECHANICAL
25	M–810		ELEVATOR LANDINGS HOISTS AT FLOOR LEVEL 36 PLAN
26	M–811		EXTENSIBLE PLATFORMS HOISTS AT FLOOR LEVEL 32 PLAN
27	M–812		EXTENSIBLE PLATFORMS HOISTS AT FLOOR LEVEL 34 PLAN
28	M–813		EXTENSIBLE PLATFORMS HOISTS ELEVATION
29	M–814		ELEVATOR LANDINGS HOISTS ELEVATION
30	M–815		EXTENSIBLE PLATFORMS HOISTS SLING SCHEDULE
31	M–816		ELEVATOR PLATFORMS HOISTS SLING SCHEDULE
32	M–817		ELEVATOR PLATFORMS HOIST HOIST CART
			ELECTRICAL
33	E–001		ELECTRICAL GENERAL NOTES, LEGEND AND ABBREVIATIONS
34	ED–136		LEVEL 36 – ELECTRICAL DEMOLITION PLANS
35	E–132		LEVEL 32 – ELECTRICAL PLAN
36	E–134		LEVEL 34 – ELECTRICAL PLAN
37	E–135		LEVEL 35 – ELECTRICAL PLAN
38	E–136		LEVEL 36 – ELECTRICAL PLAN
39	E–580		ELECTRICAL DETAILS
40	E–600		POWER ONE–LINE – DIAGRAM 1
41	E–601		POWER ONE–LINE – DIAGRAM 2
42	E–602		ELECTRICAL SCHEDULES
43	E–641		HOIST CONTROLLER ELEVATION AND BLOCK DIAGRAM

ABBREVIATIONS

@	AT
A	AMPERES
AC	ALTERNATING CURRENT
ACI	AMERICAN CONCRETE INSTITUTE
AISC	AMERICAN INSTITUTE OF STEEL CONSTRUCTION
AL	ALUMINUM
ASD	ALLOWABLE STRENGTH DESIGN
ASTM	AMERICAN SOCIETY for TESTING and MATERIALS
CJP	COMPLETE JOINT PENETRATION
COL	COLUMN
CONC	CONCRETE
DIA	DIAMETER
EL	ELEVATION
EQ	EQUAL
F	FAHRENHEIT
FAC	FACTORY
FL	FLOOR
FT	FOOT
HDG	HOT DIP GALVANIZED
HMD	HOMOGENEOUS MATERIAL DESCRIPTION
HMP	HOMOGENEOUS MATERIAL PAINT
HP	HORSEPOWER
HSS	HOLLOW STRUCTURAL SQUARE AND RECTANGULAR SECTIONS
HT	HEIGHT
KG	KILOGRAM
LB	POUND
LBS	POUNDS
MAX	MAXIMUM
MG	MILLIGRAM
MM	MILLIMETER
MIN	MINIMUM
NEC	NATIONAL ELECTRIC CODE
NEMA	NATIONAL ELECTRICAL MANUFACTURERS ASSOCIATION
NFPA	NATIONAL FIRE PROTECTION ASSOCIATION
NIC	NOT IN CONTRACT
NO	NUMBER
NTS	NOT TO SCALE
OAE	OR APPROVED EQUAL
OC	ON CENTER
OPP	OPPOSITE
OSHA	OCCUPATIONAL SAFETY AND HEALTH ADMINISTRATION
PCB	POLYCHLORINATED BYPHENOLS
PH	PHASE
PL	PLATE
P/N	PART NUMBER
QTY	QUANTITY
REF	REFERENCE
RGC	RIGID GALVANIZED CONDUIT
RPM	REVOLUTIONS PER MINUTE
SCH	SCHEDULE
SIM	SIMILAR
SLS	SPACE LAUNCH SYSTEM
SP	SPACES
SS	STAINLESS STEEL
SYMM	SYMMETRIC
TOS	TOP OF STEEL
TYP	TYPICAL
UG	MICROGRAM
UON	UNLESS OTHERWISE NOTED
V	VOLT
VAB	VEHICLE ASSEMBLY BUILDING
VAC	VOLTS, AC
VIF	VERIFY IN FIELD
VRC	VERTICAL RATED CAPACITY
W	WATT
WD	WIDTH
W/	WITH
WP	WORK POINT
WP	WOOD POST
"	INCH(ES)
'	FOOT(FEET)

DRAWING SYMBOLS

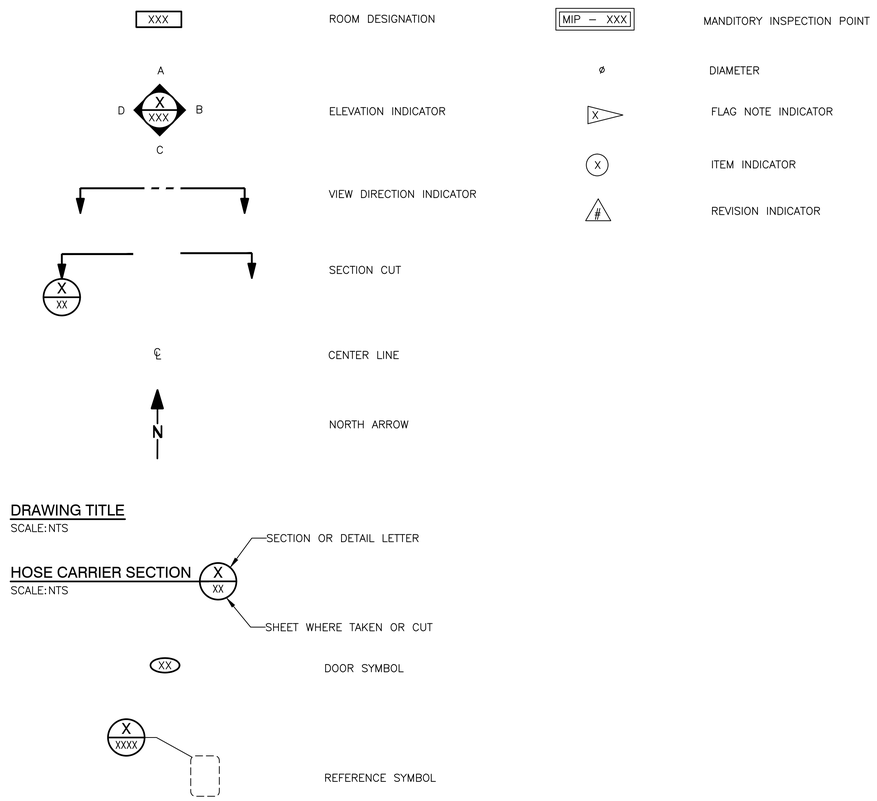

WHEN PRINTED FULL SIZE, THIS SHEET IS 34"X44"
THIS COMPUTER DRAWING WAS
CREATED IN AUTOCAD AND
FILED UNDER THE DRAWING NUMBER

V–002

SYM	ZONE	DESCRIPTION	DATE	APPROVAL
		REVISIONS		

RS&H IMPROVING YOUR WORLD
Reynolds, Smith and Hills, Inc.
115 Alma Blvd, Suite 101
Merritt Island, Florida 32953-4101
(321) 453-0212 (321) 453-0223 FAX
www.rsandh.com

SIGNATURES		DATE
DRAWN:	BRIAN CURTIS	08-20-2013
CHECKED:	TONY MAZZA	08-20-2013
SUBMITTED: ARCHENG OF RECORD:	ROBERT PRUSS	
ST OF LICENSURE: FL LICENSE NO:		
APPROVED:	JOHN KERCSMAR	
	MIKE HARTNETT	

NATIONAL AERONAUTICS AND SPACE ADMINISTRATION
JOHN F. KENNEDY SPACE CENTER, NASA
KENNEDY SPACE CENTER, FLORIDA

LAUNCH COMPLEX 39
VEHICLE ASSEMBLY BUILDING

MODIFY VEHICLE ASSEMBLY BUILDING HIGH BAY 3 FOR SLS – HOISTS DRAWING INDEX, GENERAL SYMBOLS AND ABBREVIATIONS

FILE NO.	SIZE	DWG. NO.	REV
302–6058–043	E	79K39667	

PROJ. NO. PCN 99000.5 SHEET 2 OF

NOTICE -- WHEN GOVERNMENT DRAWINGS, SPECIFICATIONS, OR OTHER DATA ARE USED FOR ANY PURPOSE OTHER THAN IN CONNECTION WITH A DEFINITELY RELATED GOVERNMENT PROCUREMENT OPERATION, THE UNITED STATES GOVERNMENT THEREBY INCURS NO RESPONSIBILITY NOR ANY OBLIGATION WHATSOEVER; AND THE FACT THAT THE GOVERNMENT MAY HAVE FORMULATED, FURNISHED, OR IN ANY WAY SUPPLIED THE SAID DRAWINGS, SPECIFICATIONS, OR OTHER DATA IS NOT TO BE REGARDED BY IMPLICATION OR OTHERWISE IN ANY MANNER CONSTRUED, AS LICENSING THE HOLDER OR ANY OTHER PERSON OR CORPORATION; OR CONVEYING ANY RIGHTS OR PERMISSION TO MANUFACTURE, USE, OR SELL ANY PATENTED INVENTION THAT IN ANY WAY BE RELATED THERETO.

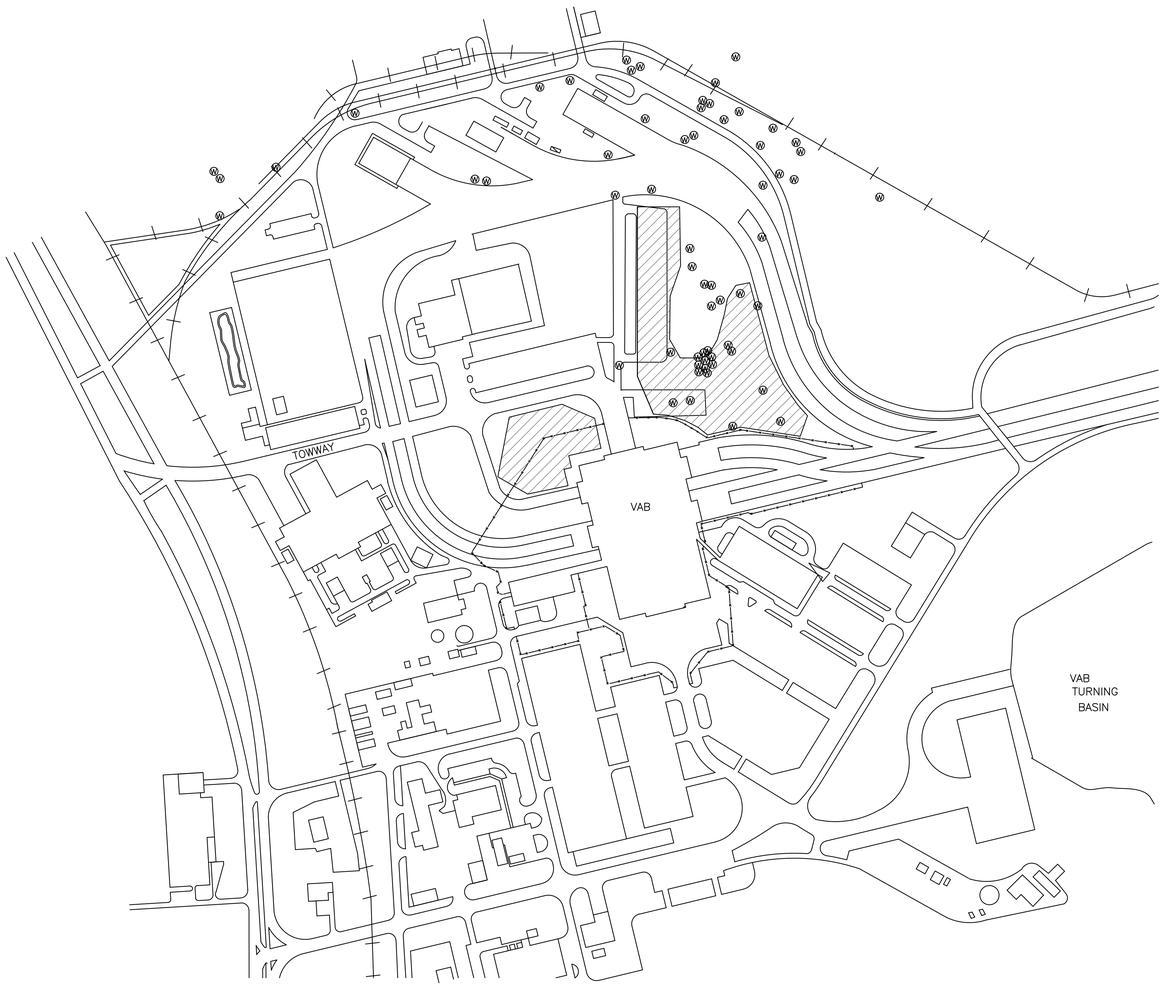

N

CONSTRUCTION SITE AND LAYDOWN AREA

SCALE: NTS

NOTES:

1. CONTRACTOR USE OF LAYDOWN AREAS SHALL ENSURE STORMWATER DRAINAGE TO COLLECTION AREAS ARE NOT IMPEDED. LAYDOWN AREAS SHALL NOT BE USED TO PERFORM ABRASIVE/WATER BLASTING, PAINTING, WELDING, CUTTING, ETC. WITHOUT APPROVAL FROM THE CONTRACTING OFFICER AND CONCURRENCE FROM THE NASA ENVIRONMENTAL ASSURANCE BRANCH.

2. IT IS THE CONTRACTOR'S RESPONSIBILITY TO FIELD VERIFY THE LOCATION OF EXISTING UTILITIES, INCLUDING ENVIRONMENTAL MONITORING WELLS, PROTECT THEM IN PLACE AND MAINTAIN THEM IN SERVICE AT ALL TIMES. THE CONTRACTOR SHALL IMMEDIATELY NOTIFY THE CONTRACTING OFFICER OF ANY UTILITY DAMAGED BY CONSTRUCTION ACTIVITY. THE CONTRACTOR IS RESPONSIBLE FOR REPAIRING AND RETURNING UTILITIES TO SERVICE AS SOON AS POSSIBLE AFTER THE OCCURRENCE OF DAMAGE OR SERVICE OUTAGE.

3. CONTRACTOR SHALL SUBMIT, FOR APPROVAL, A PLAN TO STABILIZE ALL REQUIRED AREAS TO BE USED FOR HEAVY EQUIPMENT TRAVEL/PARKING. PLAN SHALL INCLUDE, AT A MINIMUM, CONSTRUCTION SITE, ALL LAYDOWN AREAS, AND ACCESS TO THOSE AREAS, AS REQUIRED. CONTRACTOR SHALL BE RESPONSIBLE TO PERFORM NECESSARY STABILIZATION PER THE APPROVED PLAN PRIOR TO LOCATING ANY HEAVY EQUIPMENT ON SITE.

4. INDICATES CONSTRUCTION SITE AND LAYDOWN AREAS.

5. CONTRACTOR SHALL USE TOWWAY FROM KENNEDY PARKWAY FOR PRIMARY INGRESS AND EGRESS TO AND FROM THE CONSTRUCTION SITE.

6. PARKING LOCATIONS FOR CONTRACTOR PERSONNEL SHALL BE COORDINATED WITH THE CONTRACTING OFFICER.

7. CONTRACTOR TRAILER LOCATIONS SHALL BE COORDINATED WITH THE CONTRACTING OFFICER.

8. THE CONTRACTOR IS RESPONSIBLE FOR PROVIDING ALL UTILITY HOOKUPS TO CONSTRUCTION TRAILERS. UTILITY POINTS OF CONNECTION SHALL BE COORDINATED WITH THE CONTRACTING OFFICER.

9. AREA DISTURBED DURING DEMOLITION AND CONSTRUCTION SHALL BE RE-GRADED TO MATCH ADJACENT TOPOGRAPHY. ALL DISTURBED AREAS ON SITE SHALL RECEIVE GROUND COVER TO MATCH EXISTING PRIOR TO COMPLETION OF CONSTRUCTION.

10. (W) INDICATES ENVIRONMENTAL WELL LOCATIONS. CONTRACTOR SHALL PROTECT ENVIRONMENTAL MONITORING WELLS IN PLACE. DAMAGED ENVIRONMENTAL MONITORING WELLS WILL BE REPAIRED OR REPLACED BY THE CONTRACTOR AT NO ADDITIONAL COST TO THE GOVERNMENT. ENVIRONMENTAL MONITORING WELL LOCATIONS SHOWN ON THIS SHEET ARE APPROXIMATE.

WHEN PRINTED FULL SIZE, THIS SHEET IS 34"X44"
THIS COMPUTER DRAWING WAS
CREATED IN AUTOCAD AND
FILED UNDER THE DRAWING NUMBER

V-003

SYM	ZONE	DESCRIPTION	DATE	APPROVAL
		REVISIONS		

RS&H IMPROVING YOUR WORLD
Reynolds, Smith and Hills, Inc.
115 Alma Blvd, Suite 101
Merritt Island, Florida 32953-4101
(321) 453-0212 (321) 453-0223 FAX
www.rsandh.com

SIGNATURES		DATE
DRAWN:	JOSEPH HAUER	08-20-2013
CHECKED:	JIM STAPP	08-20-2013
SUBMITTED: ARCH/ENG OF RECORD:	ROBERT PRUSS	
ST OF LICENSURE: FL	LICENSE NO:	
APPROVED:	JOHN KERCSMAR	
	MIKE HARTNETT	

NATIONAL AERONAUTICS AND SPACE ADMINISTRATION
JOHN F. KENNEDY SPACE CENTER, NASA
KENNEDY SPACE CENTER, FLORIDA

LAUNCH COMPLEX 39
VEHICLE ASSEMBLY BUILDING
MODIFY VEHICLE ASSEMBLY BUILDING
HIGH BAY 3 FOR SLS – HOISTS

WORK LAYDOWN LOCATIONS

FILE NO.	SIZE	DWG. NO.	REV
302-6058-043	E	79K39667	

PROJ. NO. PCN 99000.5 SHEET 3 OF

NOTICE -- WHEN GOVERNMENT DRAWINGS, SPECIFICATIONS, OR OTHER DATA ARE USED FOR ANY PURPOSE OTHER THAN IN CONNECTION WITH A DEFINITELY RELATED GOVERNMENT PROCUREMENT OPERATION, THE UNITED STATES GOVERNMENT THEREBY INCURS NO RESPONSIBILITY NOR ANY OBLIGATION WHATSOEVER; AND THE FACT THAT THE GOVERNMENT MAY HAVE FORMULATED, FURNISHED, OR IN ANY WAY SUPPLIED THE SAID DRAWINGS, SPECIFICATIONS, OR OTHER DATA IS NOT TO BE REGARDED BY IMPLICATION OR OTHERWISE IN ANY MANNER CONSTRUED, AS LICENSING THE HOLDER OR ANY OTHER PERSON OR CORPORATION; OR CONVEYING ANY RIGHTS OR PERMISSION TO MANUFACTURE, USE, OR SELL ANY PATENTED INVENTION THAT IN ANY WAY BE RELATED THERETO.

GENERAL NOTES:

HEAVY METALS AND PCBS

1. EXISTING PAINT COATINGS ON HOMOGENEOUS MATERIAL IDENTIFIED IN THE TABLES CONTAIN HEAVY METALS AND PCBS. DISTURBANCE OF THESE EXISTING COATINGS SHALL BE IN ACCORDANCE WITH FEDERAL, STATE, AND LOCAL HEALTH AND SAFETY REQUIREMENTS. THE CONTRACTOR SHALL SUBMIT A HEALTH AND SAFETY PLAN AND RESPIRATOR PLAN FOR APPROVAL PRIOR TO WORK. THE CONTRACTOR SHALL MANAGE ALL EXISTING COATING WASTE IN ACCORDANCE WITH SPECIFICATION 01 57 20.00 10 ENVIRONMENTAL PROTECTION AND SUBMIT A HAZARDOUS WASTE MANAGEMENT PLAN (AS PART OF THE ENVIRONMENTAL PROTECTION PLAN) FOR APPROVAL PRIOR TO WORK.
2. NO TORCH CUTTING OR ABRASIVE GRINDING OF EXISTING PAINTS AND COATINGS IS ALLOWED. REMOVE PAINTS AND COATINGS 6 INCHES TO EITHER SIDE WHERE TORCH CUTTING OR ABRASIVE GRINDING WILL OCCUR.

High Bay 3: Total Metals/PCB Inspection Analysis Summary
Hoist Package

HMID	Homogeneous Material Description	Coating Appearance	Sample ID Numbers	Hazardous Metals (Yes/No)	PCBs (Yes/No)	As (mg/Kg)	Ba (mg/Kg)	Cd (mg/Kg)	Cr (mg/Kg)	Cr6 (mg/Kg)	Pb (mg/Kg)	Hg (ug/Kg)	Se (mg/Kg)	Ag (mg/Kg)	PCBs (ug/Kg)
HMP03	Vertical Beam Coatings	White Paint Gray Paint White/Gray Paint Layers	M3718, M3749, M3769, M3781	Yes	Yes	<96	<96	**150**	**210**	**6.4**	**1,500**	**920**	<96	<19	**4,200**
HMP04	Horizontal Beam Coatings	Gray Paint	M3735, M3748, M3754, M3772, M3773	Yes	Yes	<99	**160**	**180**	**400**	**870**	**2,000**	**8,900**	<99	<20	**5,800**
HMP05	Cross Beam Coating	Gray Paint	M3722, M3725, M3744, M3759, M3770	Yes	Yes	<100	**350**	**320**	**450**	**1.9**	**1,500**	**660**	<100	<20	**4,500**

Note: The above results represent the highest reported concentrations for the sample sets shown. Laboratory analytical data is referenced in InoMedic Health Applications "Asbestos, Hazardous Metals & PCB Survey" report, dated 26 April 2013 (PCN: 99000.5).
Heavy Metals/Polychlorinated Byphenols detected at concentrations above their respective Method Detection Limits are highlighted and in **Bold**.
HMID - Homogeneous Material Identification Number
Sample collection dates: February 14, 2013 and March 27, 2013

IMAGES OF HOMOGENEOUS MATERIALS CONTAINING HAZARDOUS METALS AND POLYCHLORINATED BYPHENOLS IDENTIFIED BY HMID:

HMP-03: GREY VERTICAL BEAM COATINGS

HMP-04: GREY HORIZONTAL BEAM COATINGS

HMP-05: GREY CROSS BEAM COATINGS

WHEN PRINTED FULL SIZE, THIS SHEET IS 34"X44"
THIS COMPUTER DRAWING WAS
CREATED IN AUTOCAD AND
FILED UNDER THE DRAWING NUMBER

EN-001

SYM	ZONE	DESCRIPTION	DATE	APPROVAL
		REVISIONS		

RS&H IMPROVING YOUR WORLD
Reynolds, Smith and Hills, Inc.
115 Alma Blvd, Suite 101
Merritt Island, Florida 32953-4101
(321) 453-0212 (321) 453-0223 FAX
www.rsandh.com

SIGNATURES		DATE
DRAWN:	SCOTT VOCKEL	08-20-2013
CHECKED:	BEN HURON	08-20-2013
SUBMITTED: ARCHENG OF RECORD:	ROBERT PRUSS	
ST OF LICENSURE: FL LICENSE NO:		
APPROVED:	JOHN KERCSMAR	
	MIKE HARTNETT	

NATIONAL AERONAUTICS AND SPACE ADMINISTRATION
JOHN F. KENNEDY SPACE CENTER, NASA
KENNEDY SPACE CENTER, FLORIDA

LAUNCH COMPLEX 39
VEHICLE ASSEMBLY BUILDING
MODIFY VEHICLE ASSEMBLY BUILDING
HIGH BAY 3 FOR SLS – HOISTS
METALS AND PCB
SCHEDULES AND NOTES

FILE NO. 302-6058-043 | SIZE E | DWG. NO. 79K39667 | REV

PROJ. NO. PCN 99000.5 | SHEET 4 OF

NOTICE -- WHEN GOVERNMENT DRAWINGS, SPECIFICATIONS, OR OTHER DATA ARE USED FOR ANY PURPOSE OTHER THAN IN CONNECTION WITH A DEFINITELY RELATED GOVERNMENT PROCUREMENT OPERATION, THE UNITED STATES GOVERNMENT THEREBY INCURS NO RESPONSIBILITY NOR ANY OBLIGATION WHATSOEVER; AND THE FACT THAT THE GOVERNMENT MAY HAVE FORMULATED, FURNISHED, OR IN ANY WAY SUPPLIED THE SAID DRAWINGS, SPECIFICATIONS, OR ANY OTHER DATA IS NOT TO BE REGARDED BY IMPLICATION, OR OTHERWISE AS IN ANY MANNER LICENSING THE HOLDER OR ANY OTHER PERSON OR CORPORATION, OR CONVEYING ANY RIGHTS OR PERMISSION TO MANUFACTURE, USE, OR SELL ANY PATENTED INVENTION THAT IN ANY WAY BE RELATED THERETO.

ARCHITECTURAL SYMBOLS LEGEND

XX	NEW DOOR, NUMBER
	DENOTES STEEL MATERIAL IN SECTION
VIF	VERIFY IN FIELD
	NEW DOOR OR GATE
	HDG GRATING
1	SIGN TYPE INDICATOR
NIC	NOT IN CONTRACT
FAC	FACTORY

GENERAL NOTES:

1. REFER TO STRUCTURAL, MECHANICAL AND ELECTRICAL SHEETS FOR ADDITIONAL INFORMATION.
2. DO NOT SCALE DRAWINGS. IF DIMENSIONS ARE IN QUESTION, OBTAIN CLARIFICATION OF AREA IN QUESTION.
3. REFER TO SPECIFICATIONS SECTION 09 97 13.00 98 FOR STEEL COATINGS. QUALITY CONTROL SHALL BE PERFORMED BY AN INDEPENDENT NACE CERTIFIED COATING INSPECTOR LEVEL 3 PROVIDED BY THE GENERAL CONTRACTOR.
4. ISOLATE DISSIMILAR METALS SUCH AS ALUMINUM AND STAINLESS STEEL WITH TEFLON LINER OR TEFLON COATING, DEPENDING ON TYPE OF ASSEMBLY.

SIGNAGE

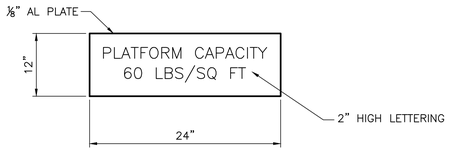

1 SIGNAGE TYPE 1 – SEE A–500 AND A–501 FOR LOCATION

CODE SUMMARY:

VAB HB3 MODIFICATIONS FOR SLS DESIGN

PROJECT SUMMARY

PROJECT SCOPE IS TO INSTALL HOIST SERVICE PLATFORMS IN THE VAB (VEHICLE ASSEMBLY BUILDING). PROJECT SCOPE ALSO INCLUDES INSTALLING HOISTS FOR THE EXTENSIBLE PLATFORMS AND INSTALLING HOISTS FOR THE ELEVATOR PLATFORMS.

APPLICABLE CODES

NFPA 101 LIFE SAFETY CODE 2012

OSHA OCCUPATIONAL SAFETY AND HEALTH ADMINISTRATION – DEPARTMENT OF LABOR STANDARD 29 CFR 1910

CONSTRUCTION TYPE

VAB – VEHICLE ASSEMBLY BUILDING EXISTING TYPE II UNPROTECTED

BUILDING USE CATEGORY

VAB IS CONSIDERED A SPECIAL PURPOSE INDUSTRIAL OCCUPANCY WITH INCIDENTAL HIGH HAZARD OPERATIONS

HANDRAILS AND GUARDRAILS

GUARDRAILS 42" HIGH ARE REQUIRED AT THE OPEN SIDES OF EGRESS AND WALKING AND WORKING SURFACES THAT EXCEED 30" ABOVE THE ADJACENT FLOOR OR GROUND LEVEL

GUARDRAILS

42" IN HEIGHT, PIPE RAILINGS 1 1/2" NOMINAL DIAMETER WITH POSTS SPACED NOT MORE THAN 5'–0" OC

TOE BOARD 4" IN HT. NOT MORE THAN 1/4" CLEARANCE ABOVE FLOOR LEVEL

ALL GUARDRAILS ARE TO HAVE AN INTERMEDIATE RAIL MOUNTED AT THE MID–POINT OF THE HEIGHT OF THE GUARDRAIL PER 29 CFR 1910.23 (e)

WHEN PRINTED FULL SIZE, THIS SHEET IS 34"X44"
THIS COMPUTER DRAWING WAS
CREATED IN AUTOCAD AND
FILED UNDER THE DRAWING NUMBER

A–001

SYM	ZONE	DESCRIPTION	DATE	APPROVAL
REVISIONS				

RS&H IMPROVING YOUR WORLD
Reynolds, Smith and Hills, Inc.
115 Alma Blvd, Suite 101
Merritt Island, Florida 32953-4101
(321) 453-0212 (321) 453-0223 FAX
www.rsandh.com

SIGNATURES		DATE
DRAWN:	BRIAN CURTIS	08-20-2013
CHECKED:	ALICE SCHULTZ	08-20-2013
SUBMITTED: ARCH/ENG OF RECORD:	ANTHONY MAZZA	
ST OF LICENSURE: FL LICENSE NO:		
APPROVED:	JOHN KERCSMAR	
	MIKE HARTNETT	

NATIONAL AERONAUTICS AND SPACE ADMINISTRATION
JOHN F. KENNEDY SPACE CENTER, NASA
KENNEDY SPACE CENTER, FLORIDA

LAUNCH COMPLEX 39
VEHICLE ASSEMBLY BUILDING

MODIFY VEHICLE ASSEMBLY BUILDING HIGH BAY 3 FOR SLS – HOISTS ARCHITECTURAL ABBREVIATIONS, SYMBOLS AND GENERAL NOTES

FILE NO.	SIZE	DWG. NO.	REV
302–6058–043	E	79K39667	

PROJ. NO. PCN 99000.5 SHEET 5 OF

NOTICE -- WHEN GOVERNMENT DRAWINGS, SPECIFICATIONS, OR OTHER DATA ARE USED FOR ANY PURPOSE OTHER THAN IN CONNECTION WITH A DEFINITELY RELATED GOVERNMENT PROCUREMENT OPERATION, THE UNITED STATES GOVERNMENT THEREBY INCURS NO RESPONSIBILITY NOR ANY OBLIGATION WHATSOEVER; AND THE FACT THAT THE GOVERNMENT MAY HAVE FORMULATED, FURNISHED, OR IN ANY WAY SUPPLIED THE SAID DRAWINGS, SPECIFICATIONS, OR ANY OTHER DATA IS NOT TO BE REGARDED BY IMPLICATION OR OTHERWISE AS IN ANY MANNER LICENSING THE HOLDER OR ANY OTHER PERSON OR CORPORATION, OR CONVEYING ANY RIGHTS OR PERMISSION TO MANUFACTURE, USE, OR SELL ANY PATENTED INVENTION THAT IN ANY WAY BE RELATED THERETO.

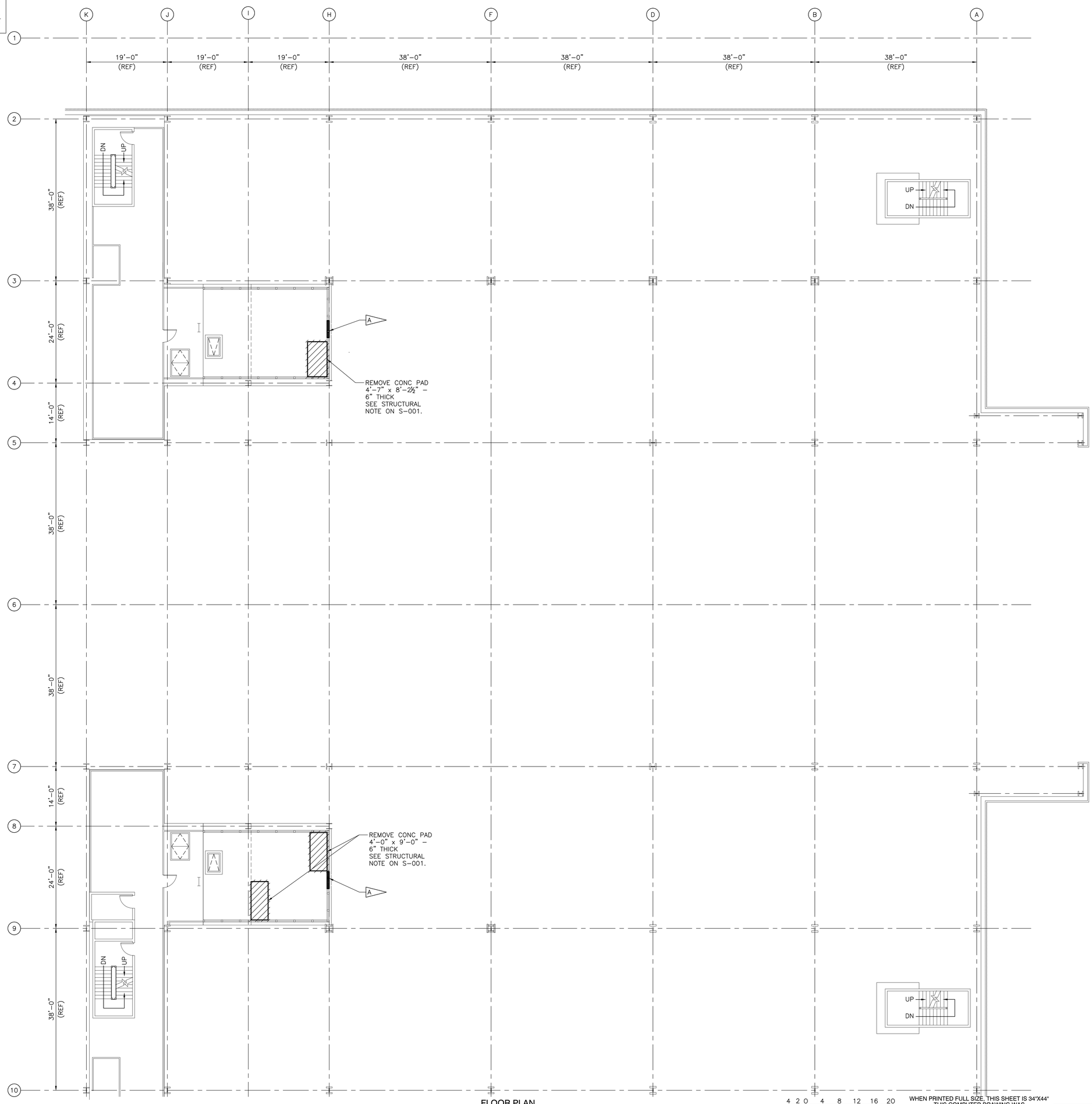

SPECIFIC NOTES:

A REMOVE APPROXIMATELY 4'-0" W x 8'-0" TALL PORTION OF FENCING. ONCE FENCING IS REMOVED INSTALL REMOVABLE GUARDRAIL, SEE SHEET A-501.

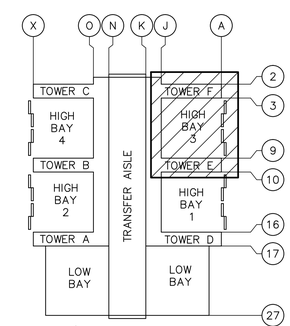

VAB KEY PLAN
SCALE: NTS

FLOOR PLAN
SCALE: 1/8" = 1'-0"

4 2 0 4 8 12 16 20
1/8 IN = 1 FT

WHEN PRINTED FULL SIZE THIS SHEET IS 34"X44"
THIS COMPUTER DRAWING WAS CREATED IN AUTOCAD AND FILED UNDER THE DRAWING NUMBER

AD-136

SYM	ZONE	DESCRIPTION	DATE	APPROVAL
		REVISIONS		

RS&H IMPROVING YOUR WORLD
Reynolds, Smith and Hills, Inc.
115 Alma Blvd, Suite 101
Merritt Island, Florida 32953-4101
(321) 453-0212 (321) 453-0223 FAX
www.rsandh.com

SIGNATURES		DATE
DRAWN:	BRIAN CURTIS	08-20-2013
CHECKED:	ALICE SCHULTZ	08-20-2013
SUBMITTED: ARCH/ENG OF RECORD:	ANTHONY MAZZA	
ST OF LICENSURE: FL		
LICENSE NO:		
APPROVED:	JOHN KERCSMAR	
	MIKE HARTNETT	

NATIONAL AERONAUTICS AND SPACE ADMINISTRATION
JOHN F. KENNEDY SPACE CENTER, NASA
KENNEDY SPACE CENTER, FLORIDA

LAUNCH COMPLEX 39
VEHICLE ASSEMBLY BUILDING
MODIFY VEHICLE ASSEMBLY BUILDING HIGH BAY 3 FOR SLS – HOISTS LEVEL 36 – DEMOLITION PLAN

FILE NO.	SIZE	DWG. NO.	REV
302-6058-043	E	79K39667	

PROJ. NO. PCN 99000.5 SHEET 6 OF

NOTICE -- WHEN GOVERNMENT DRAWINGS, SPECIFICATIONS, OR OTHER DATA ARE USED FOR ANY PURPOSE OTHER THAN IN CONNECTION WITH A DEFINITELY RELATED GOVERNMENT PROCUREMENT OPERATION, THE UNITED STATES GOVERNMENT THEREBY INCURS NO RESPONSIBILITY NOR ANY OBLIGATION WHATSOEVER; AND THE FACT THAT THE GOVERNMENT MAY HAVE FORMULATED, FURNISHED, OR IN ANY WAY SUPPLIED THE SAID DRAWINGS, SPECIFICATIONS, OR ANY OTHER DATA IS NOT TO BE CONSTRUED BY IMPLICATION OR OTHERWISE AS IN ANY MANNER LICENSING THE HOLDER OR ANY OTHER PERSON OR CORPORATION, OR CONVEYING ANY RIGHTS OR PERMISSION TO MANUFACTURE, USE, OR SELL ANY PATENTED INVENTION THAT IN ANY WAY BE RELATED THERETO.

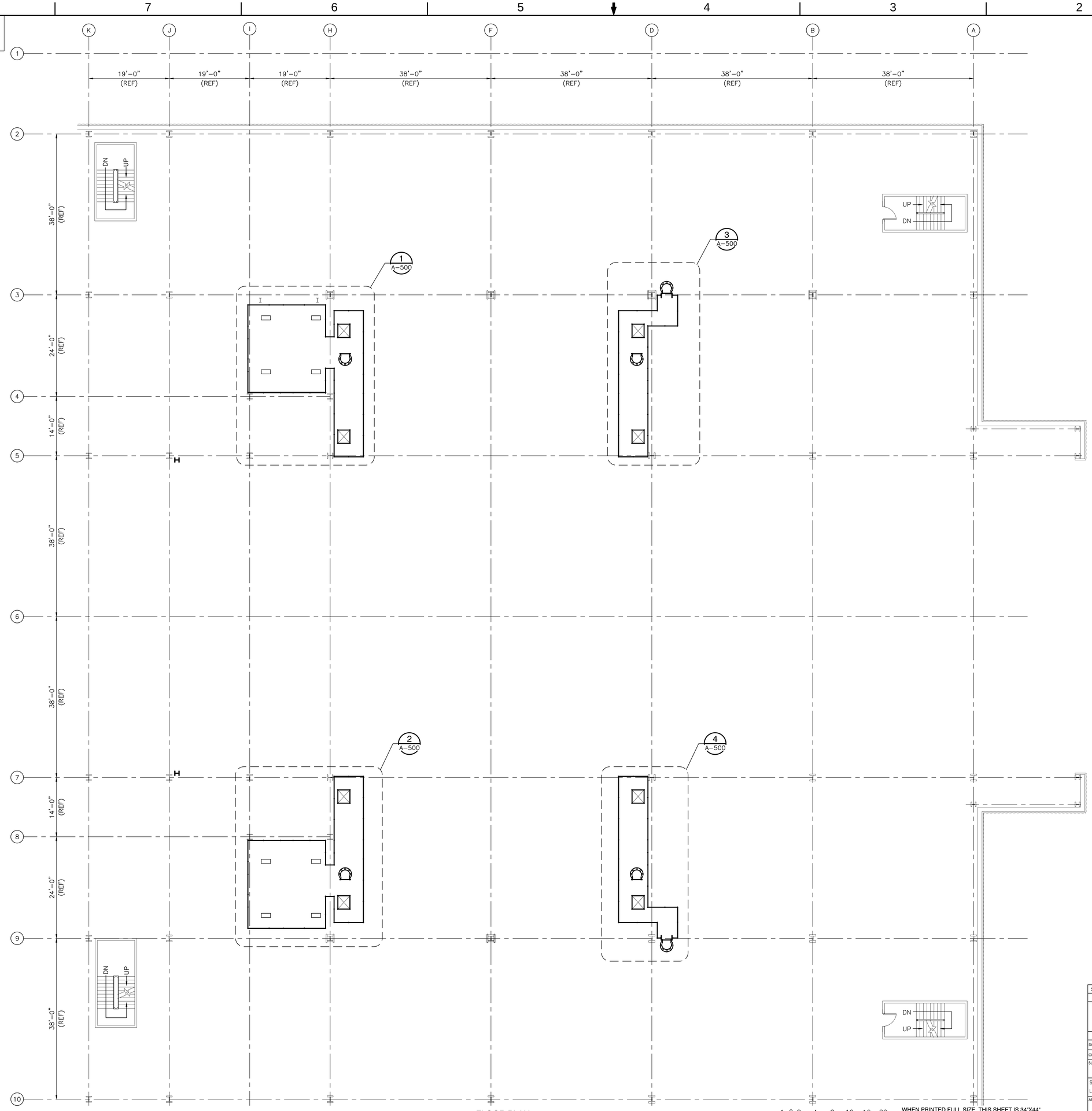

FLOOR PLAN
SCALE: 1/8" = 1'-0"

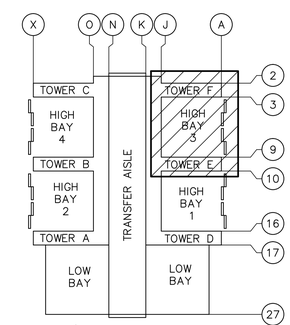

VAB KEY PLAN
SCALE: NTS

4 2 0 4 8 12 16 20
1/8 IN = 1 FT

WHEN PRINTED FULL SIZE, THIS SHEET IS 34"X44"
THIS COMPUTER DRAWING WAS
CREATED IN AUTOCAD AND
FILED UNDER THE DRAWING NUMBER

A-135

SYM	ZONE	DESCRIPTION	DATE	APPROVAL
		REVISIONS		

RS&H IMPROVING YOUR WORLD

Reynolds, Smith and Hills, Inc.
115 Alma Blvd, Suite 101
Merritt Island, Florida 32953-4101
(321) 453-0212 (321) 453-0223 FAX
www.rsandh.com

SIGNATURES		DATE
DRAWN:	BRIAN CURTIS	08-20-2013
CHECKED:	ALICE SCHULTZ	08-20-2013
SUBMITTED: ARCH/ENG OF RECORD:	ANTHONY MAZZA	
ST OF LICENSURE: FL		
LICENSE NO:		
APPROVED:	JOHN KERSSMAR	
	MIKE HARTNETT	

NATIONAL AERONAUTICS AND SPACE ADMINISTRATION
JOHN F. KENNEDY SPACE CENTER, NASA
KENNEDY SPACE CENTER, FLORIDA

LAUNCH COMPLEX 39
VEHICLE ASSEMBLY BUILDING

MODIFY VEHICLE ASSEMBLY BUILDING HIGH BAY 3 FOR SLS – HOISTS LEVEL 35 PLAN

FILE NO.	SIZE	DWG. NO.	REV
302-6058-043	E	79K39667	

PROJ. NO. PCN 99000.5 SHEET 7 OF

NOTICE -- WHEN GOVERNMENT DRAWINGS, SPECIFICATIONS, OR OTHER DATA ARE USED FOR ANY PURPOSE OTHER THAN IN CONNECTION WITH A DEFINITELY RELATED GOVERNMENT PROCUREMENT OPERATION, THE UNITED STATES GOVERNMENT THEREBY INCURS NO RESPONSIBILITY NOR ANY OBLIGATION WHATSOEVER; AND THE FACT THAT THE GOVERNMENT MAY HAVE FORMULATED, FURNISHED, OR IN ANY WAY SUPPLIED THE SAID DRAWINGS, SPECIFICATIONS, OR ANY OTHER DATA IS NOT TO BE REGARDED BY IMPLICATION OR OTHERWISE AS IN ANY MANNER LICENSING THE HOLDER OR ANY OTHER PERSON OR CORPORATION, OR CONVEYING ANY RIGHTS OR PERMISSION TO MANUFACTURE, USE, OR SELL ANY PATENTED INVENTION THAT IN ANY WAY BE RELATED THERETO.

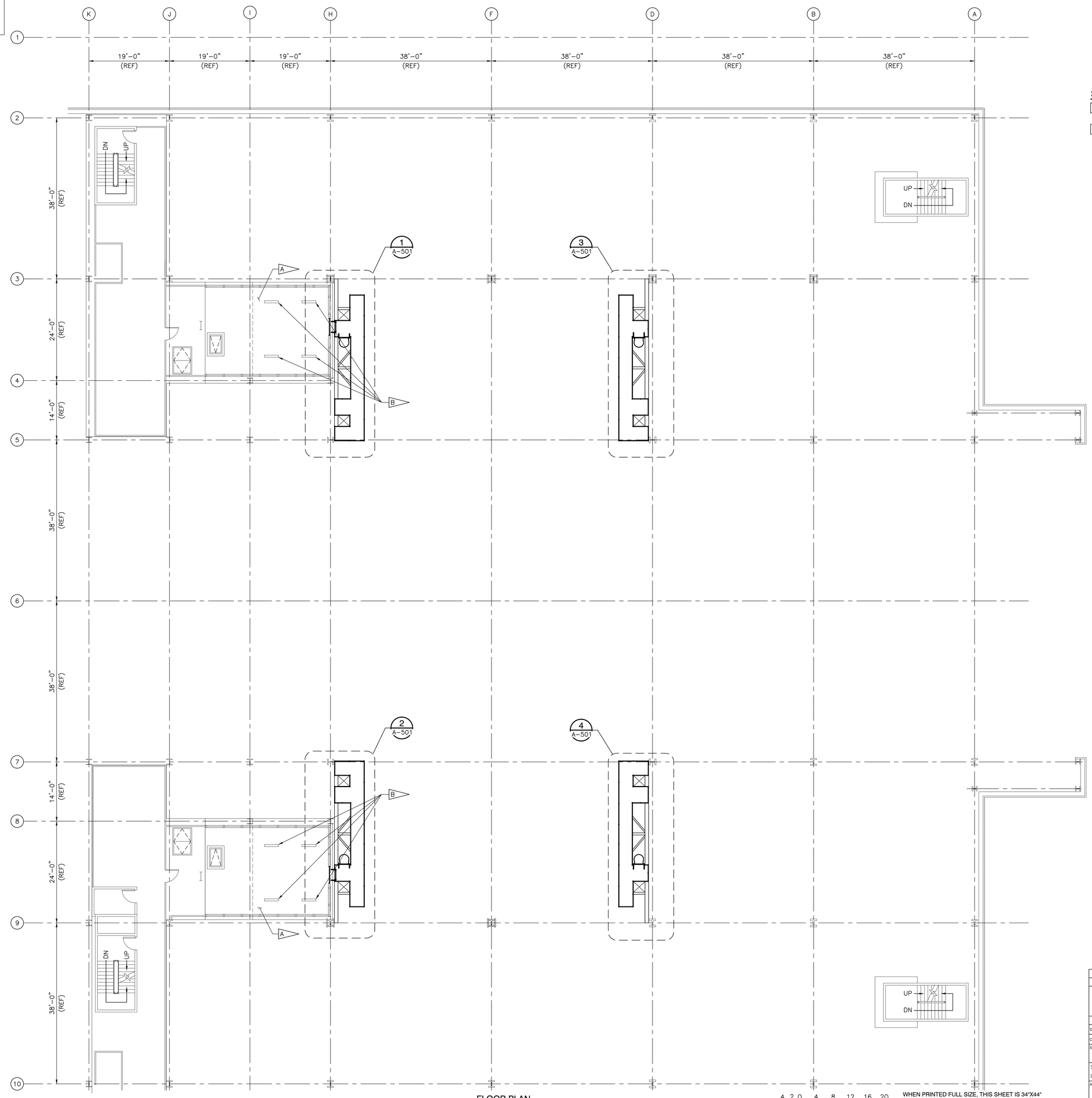

SPECIFIC NOTES:

A EXISTING ELEVATOR MACHINE ROOM.

B HOLE THROUGH CONCRETE FLOOR FOR HOIST ROPE. COORDINATE SIZE AND LOCATION WITH HOIST MANUFACTURER.

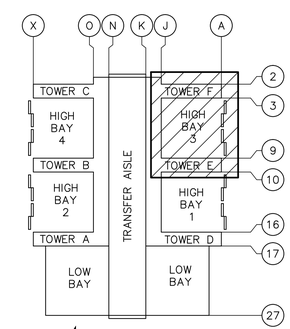

VAB KEY PLAN
SCALE: NTS

FLOOR PLAN
SCALE: 1/8" = 1'-0"

4 2 0 4 8 12 16 20
1/8 IN = 1 FT

WHEN PRINTED FULL SIZE, THIS SHEET IS 34"X44"
THIS COMPUTER DRAWING WAS
CREATED IN AUTOCAD AND
FILED UNDER THE DRAWING NUMBER

A-136

SYM	ZONE	DESCRIPTION	DATE	APPROVAL

REVISIONS

RS&H IMPROVING YOUR WORLD

Reynolds, Smith and Hills, Inc.
115 Alma Blvd, Suite 101
Merritt Island, Florida 32953-4101
(321) 453-0212 (321) 453-0223 FAX
www.rsandh.com

SIGNATURES		DATE
DRAWN:	BRIAN CURTIS	08-20-2013
CHECKED:	ALICE SCHULTZ	08-20-2013
SUBMITTED: ARCH/ENG OF RECORD:	ANTHONY MAZZA	
ST OF LICENSURE: FL		
LICENSE NO:		
APPROVED:	JOHN KERCSMAR	
	MIKE HARTNETT	

NATIONAL AERONAUTICS AND SPACE ADMINISTRATION
JOHN F. KENNEDY SPACE CENTER, NASA
KENNEDY SPACE CENTER, FLORIDA

LAUNCH COMPLEX 39
VEHICLE ASSEMBLY BUILDING

MODIFY VEHICLE ASSEMBLY BUILDING HIGH BAY 3 FOR SLS – HOISTS LEVEL 36 PLAN

FILE NO.	SIZE	DWG. NO.	REV
302-6058-043	E	79K39667	

PROJ. NO. PCN 99000.5 SHEET 8 OF

NOTICE — WHEN GOVERNMENT DRAWINGS, SPECIFICATIONS, OR OTHER DATA ARE USED FOR ANY PURPOSE OTHER THAN IN CONNECTION WITH A DEFINITELY RELATED GOVERNMENT PROCUREMENT OPERATION, THE UNITED STATES GOVERNMENT THEREBY INCURS NO RESPONSIBILITY NOR ANY OBLIGATION WHATSOEVER; AND THE FACT THAT THE GOVERNMENT MAY HAVE FORMULATED, FURNISHED, OR IN ANY WAY SUPPLIED THE SAID DRAWINGS, SPECIFICATIONS, OR ANY OTHER DATA IS NOT TO BE CONSTRUED BY IMPLICATION, OR OTHERWISE AS IN ANY MANNER LICENSING THE HOLDER OR ANY OTHER PERSON OR CORPORATION, OR CONVEYING ANY RIGHTS OR PERMISSION TO MANUFACTURE, USE, OR SELL ANY PATENTED INVENTION THAT IN ANY WAY BE RELATED THERETO.

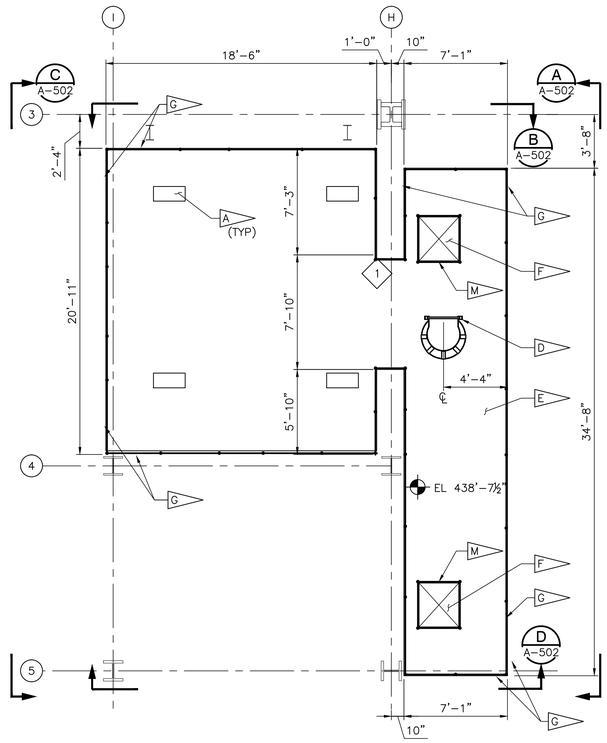

LEVEL 35

SERVICE PLATFORM PLAN - TOWER F @ COL LINE H (1 / A-135)
SCALE: 1/4" = 1'-0"

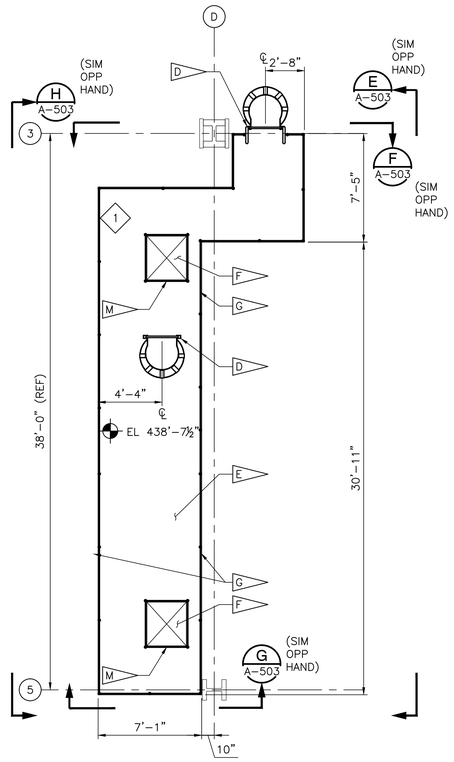

LEVEL 35

SERVICE PLATFORM PLAN - TOWER F @ COL LINE D (3 / A-135)
SCALE: 1/4" = 1'-0"

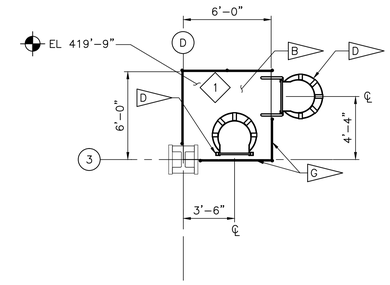

LEVEL 34

LADDER LANDING PLAN - TOWER F @ COL LINE D
SCALE: 1/4" = 1'-0"

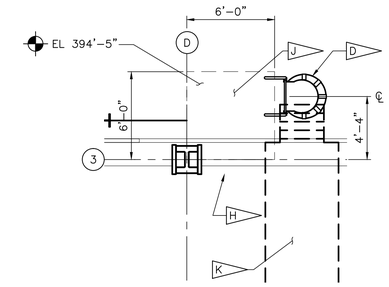

LEVEL 32

LADDER PLAN - TOWER F @ COL LINE D
SCALE: 1/4" = 1'-0"

SPECIFIC NOTES:

- A — FLOOR OPENING FOR HOIST. THE OPENING SIZE TO BE DETERMINED DURING SHOP DRAWING PHASE ONCE THE HOIST MANUFACTURER IS CHOSEN. IF OPENING IN FLOOR IS LARGER THAN OSHA MINIMUM, GUARDRAILS AROUND OPENING WILL BE REQUIRED.
- B — NEW LANDING.
- C — NOT USED.
- D — NEW FIXED LADDER, SEE A-505 FOR DETAILS.
- E — NEW SERVICE PLATFORM. SEE STRUCTURAL FOR FRAMING AND DETAILS.
- F — OPENING IN PLATFORM FLOOR.
- G — FIXED STEEL GUARDRAIL.
- H — EDGE OF SLAB.
- J — NEW LANDING ABOVE.
- K — DEMOLISH STAIR AND EXISTING CATWALK – CATWALK 38' x 5'.
- L — REMOVE 5'-0" OF EXISTING GUARDRAIL TO MAKE ROOM FOR NEW LADDER.
- M — REMOVABLE ALUMINUM GUARDRAIL ALL FOUR SIDES OF OPENING, SEE DETAIL A AND B ON THIS SHEET.

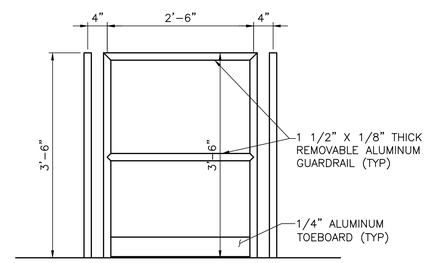

REMOVABLE GUARDRAIL (TYP) (A)
SCALE: 1" = 1'-0"

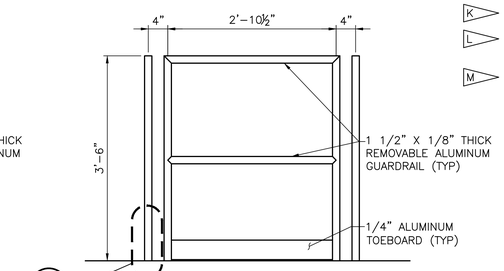

REMOVABLE GUARDRAIL (TYP) (B)
SCALE: 1" = 1'-0"

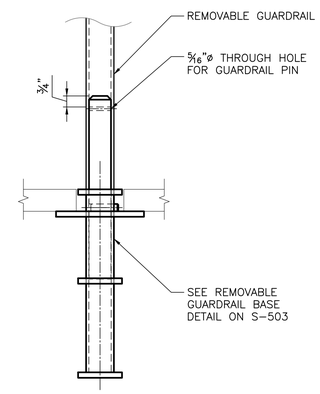

REMOVABLE GUARDRAIL BASE DETAIL (TYP) (5)
SCALE: 3" = 1'-0"

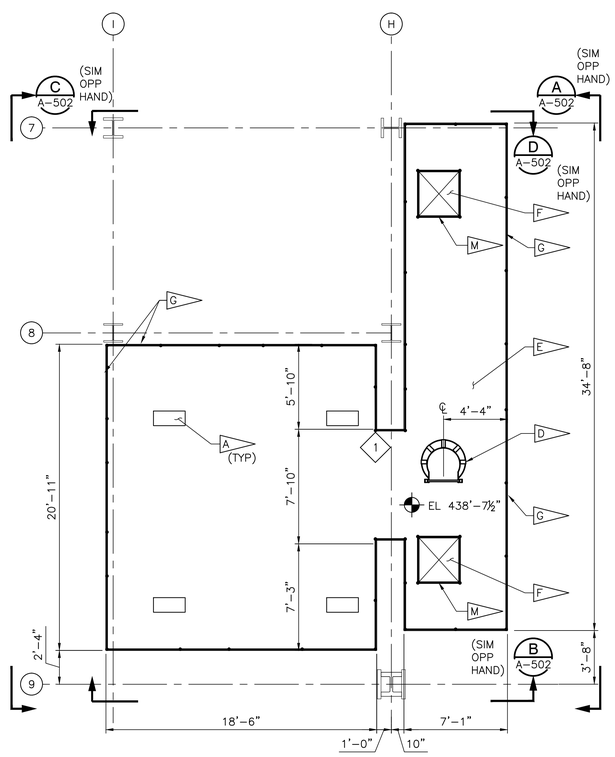

LEVEL 35

SERVICE PLATFORM PLAN - TOWER E @ COL LINE H (2 / A-135)
SCALE: 1/4" = 1'-0"

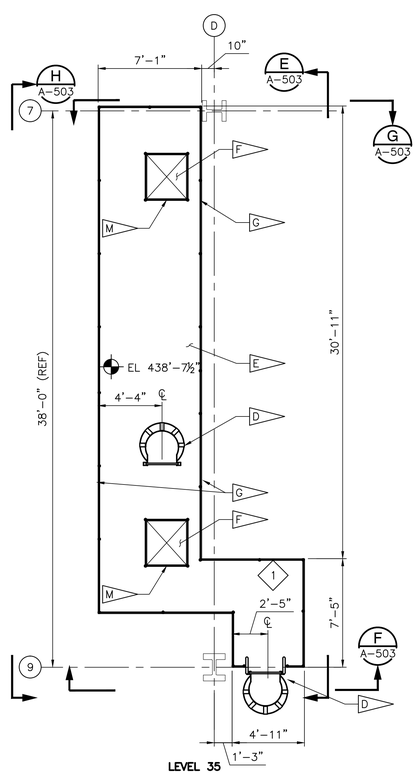

LEVEL 35

SERVICE PLATFORM PLAN - TOWER E @ COL LINE D (4 / A-135)
SCALE: 1/4" = 1'-0"

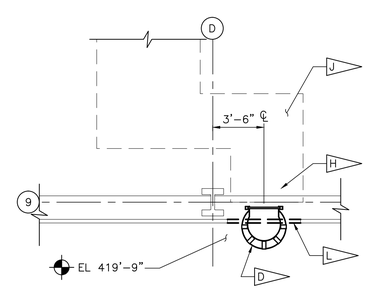

LEVEL 34

LADDER PLAN - TOWER E @ COL LINE D
SCALE: 1/4" = 1'-0"

2 1 0 2 4 6 8 10
1/4 IN = 1 FT

WHEN PRINTED FULL SIZE, THIS SHEET IS 34"X44"
THIS COMPUTER DRAWING WAS CREATED IN AUTOCAD AND FILED UNDER THE DRAWING NUMBER

A-500

SYM	ZONE	DESCRIPTION	DATE	APPROVAL
		REVISIONS		

RS&H IMPROVING YOUR WORLD
Reynolds, Smith and Hills, Inc.
115 Alma Blvd. Suite 101
Merritt Island, Florida 32953-4101
(321) 453-0212 (321) 453-0223 FAX
www.rsandh.com

SIGNATURES		DATE
DRAWN:	BRIAN CURTIS	08-20-2013
CHECKED:	ALICE SCHULTZ	08-20-2013
SUBMITTED: ARCH/ENG OF RECORD:	ANTHONY MAZZA	
ST OF LICENSURE: FL LICENSE NO:		
APPROVED:	JOHN KERSSMAR	
	MIKE HARTNETT	

NATIONAL AERONAUTICS AND SPACE ADMINISTRATION
JOHN F. KENNEDY SPACE CENTER, NASA
KENNEDY SPACE CENTER, FLORIDA

LAUNCH COMPLEX 39
VEHICLE ASSEMBLY BUILDING

MODIFY VEHICLE ASSEMBLY BUILDING HIGH BAY 3 FOR SLS – HOISTS ENLARGED PLATFORM PLANS, LEVEL 35

FILE NO.	SIZE	DWG. NO.	REV
302-6058-043	E	79K39667	

PROJ. NO. PCN 99000.5 SHEET 9 OF

NOTICE — WHEN GOVERNMENT DRAWINGS, SPECIFICATIONS, OR OTHER DATA ARE USED FOR ANY PURPOSE OTHER THAN IN CONNECTION WITH A DEFINITELY RELATED GOVERNMENT PROCUREMENT OPERATION, THE UNITED STATES GOVERNMENT THEREBY INCURS NO RESPONSIBILITY NOR ANY OBLIGATION WHATSOEVER; AND THE FACT THAT THE GOVERNMENT MAY HAVE FORMULATED, FURNISHED, OR IN ANY WAY SUPPLIED THE SAID DRAWINGS, SPECIFICATIONS, OR OTHER DATA IS NOT TO BE REGARDED BY IMPLICATION, OR OTHERWISE AS IN ANY MANNER LICENSING THE HOLDER OR ANY OTHER PERSON OR CORPORATION, OR CONVEYING ANY RIGHTS OR PERMISSION TO MANUFACTURE, USE, OR SELL ANY PATENTED INVENTION THAT IN ANY WAY BE RELATED THERETO.

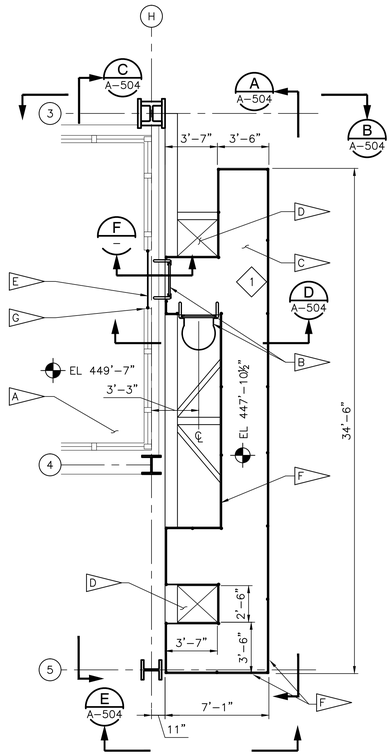

SERVICE PLATFORM PLAN - TOWER F @ COL LINE H (1 / A-136)
SCALE: 1/4" = 1'-0"

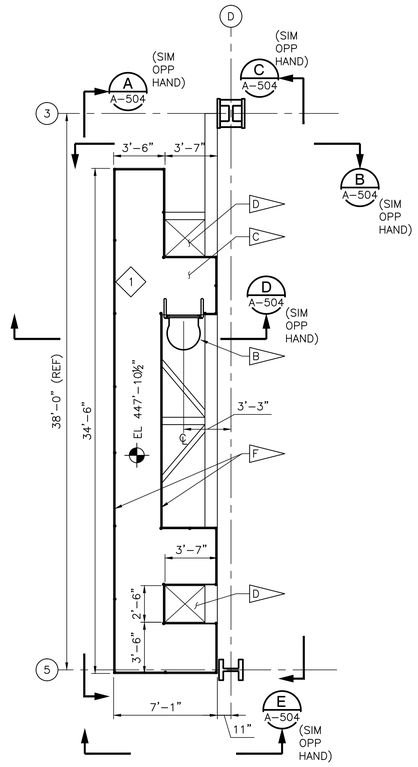

SERVICE PLATFORM PLAN - TOWER F @ COL LINE D (3 / A-136)
SCALE: 1/4" = 1'-0"

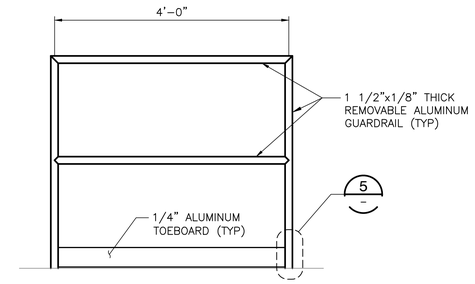

REMOVABLE GUARDRAIL (A)
SCALE: 1" = 1'-0"

SPECIFIC NOTES:

- A — EXISTING ELEVATOR MACHINE ROOM.
- B — NEW FIXED LADDER.
- C — NEW SERVICE PLATFORM. SEE STRUCTURAL FOR FRAMING AND DETAILS.
- D — OPENING IN PLATFORM FLOOR.
- E — INSTALL REMOVABLE ALUMINUM GUARDRAIL 3'-6" HT x 4'-0" WD SEE DETAIL A THIS SHEET.
- F — FIXED STEEL GUARDRAIL.
- G — DEMOLISH 4'-0" L x 6" H SECTION OF CONCRETE CURB AT LOCATION OF NEW REMOVABLE GUARDRAIL.

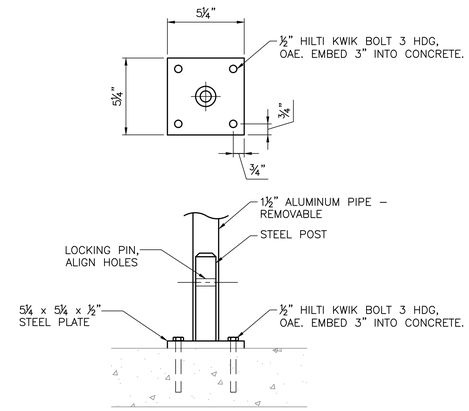

REMOVABLE GUARDRAIL (5)
SCALE: 3" = 1'-0"

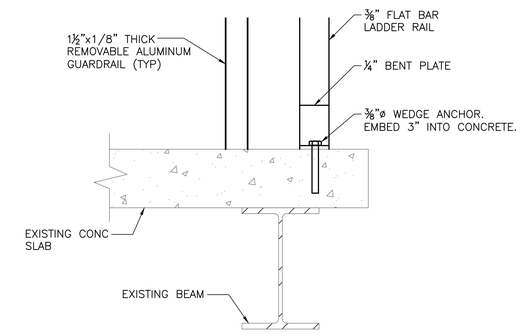

LADDER CONNECTION @ CONC SLAB (6)
SCALE: 3" = 1'-0"

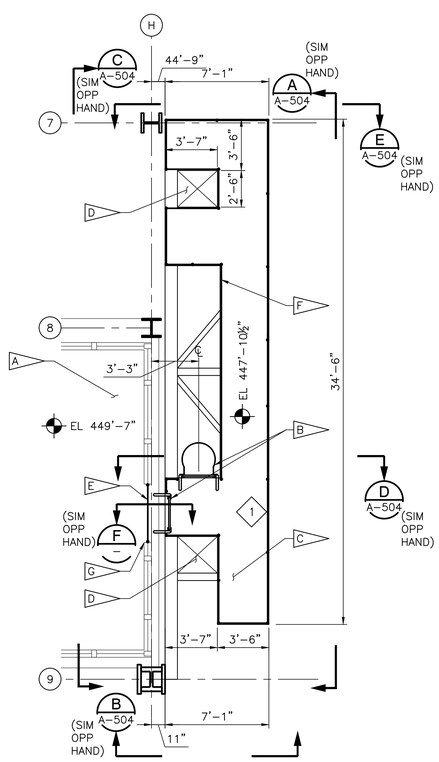

SERVICE PLATFORM PLAN - TOWER E @ COL LINE H (2 / A-136)
SCALE: 1/4" = 1'-0"

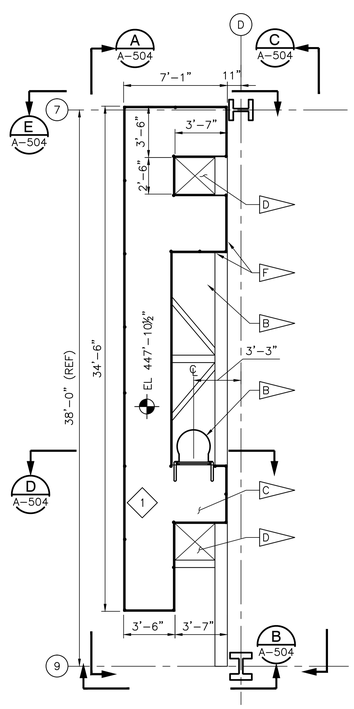

SERVICE PLATFORM PLAN - TOWER E @ COL LINE D (4 / A-136)
SCALE: 1/4" = 1'-0"

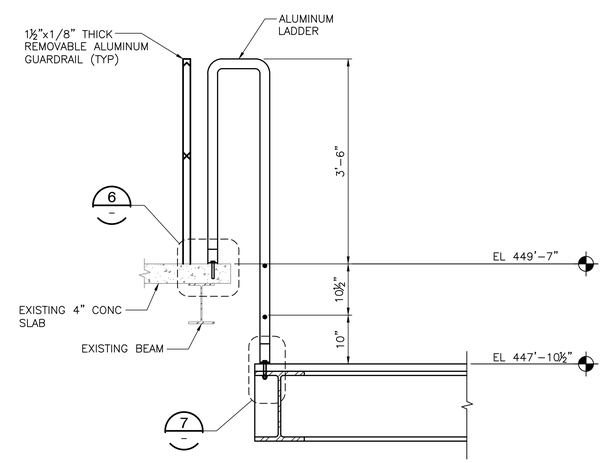

LADDER @ SERVICE PLATFORM (F)
SCALE: 1" = 1'-0"

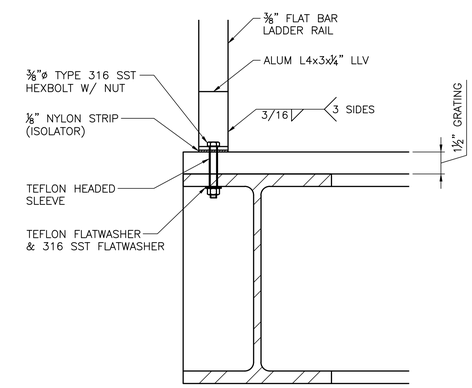

LADDER CONNECTION @ STEEL BEAM (7)
SCALE: 3" = 1'-0"

1 9" 3" 0 1 2
1 IN = 1 FT
0 3" 6" 9" 1'
3 IN = 1 FT
2 1 0 2 4 6 8 10
1/4 IN = 1 FT

WHEN PRINTED FULL SIZE, THIS SHEET IS 34"X44"
THIS COMPUTER DRAWING WAS CREATED IN AUTOCAD AND FILED UNDER THE DRAWING NUMBER

A-501

SYM	ZONE	DESCRIPTION	DATE	APPROVAL
		REVISIONS		

RS&H IMPROVING YOUR WORLD
Reynolds, Smith and Hills, Inc.
115 Alma Blvd, Suite 101
Merritt Island, Florida 32953-4101
(321) 453-0212 (321) 453-0223 FAX
www.rsandh.com

SIGNATURES		DATE
DRAWN:	BRIAN CURTIS	08-20-2013
CHECKED:	ALICE SCHULTZ	08-20-2013
SUBMITTED: ARCHENG OF RECORD	ANTHONY MAZZA	
ST OF LICENSURE: FL LICENSE NO:		
APPROVED:	JOHN KERCSMAR	
	MIKE HARNETT	

NATIONAL AERONAUTICS AND SPACE ADMINISTRATION
JOHN F. KENNEDY SPACE CENTER, NASA
KENNEDY SPACE CENTER, FLORIDA

LAUNCH COMPLEX 39
VEHICLE ASSEMBLY BUILDING

MODIFY VEHICLE ASSEMBLY BUILDING HIGH BAY 3 FOR SLS – HOISTS ENLARGED PLATFORM PLANS, LEVEL 36

FILE NO.	SIZE	DWG. NO.	REV
302-6058-043	E	79K39667	

PROJ. NO. PCN 99000.5 SHEET 10 OF

NOTICE -- WHEN GOVERNMENT DRAWINGS, SPECIFICATIONS, OR OTHER DATA ARE USED FOR ANY PURPOSE OTHER THAN IN CONNECTION WITH A DEFINITELY RELATED GOVERNMENT PROCUREMENT OPERATION, THE UNITED STATES GOVERNMENT THEREBY INCURS NO RESPONSIBILITY NOR ANY OBLIGATION WHATSOEVER; AND THE FACT THAT THE GOVERNMENT MAY HAVE FORMULATED, FURNISHED, OR IN ANY WAY SUPPLIED THE SAID DRAWINGS, SPECIFICATIONS, OR ANY OTHER DATA IS NOT TO BE REGARDED BY IMPLICATION, OR OTHERWISE AS IN ANY MANNER LICENSING THE HOLDER OR ANY OTHER PERSON OR CORPORATION, OR CONVEYING ANY RIGHTS OR PERMISSION TO MANUFACTURE, USE, OR SELL ANY PATENTED INVENTION THAT IN ANY WAY BE RELATED THERETO.

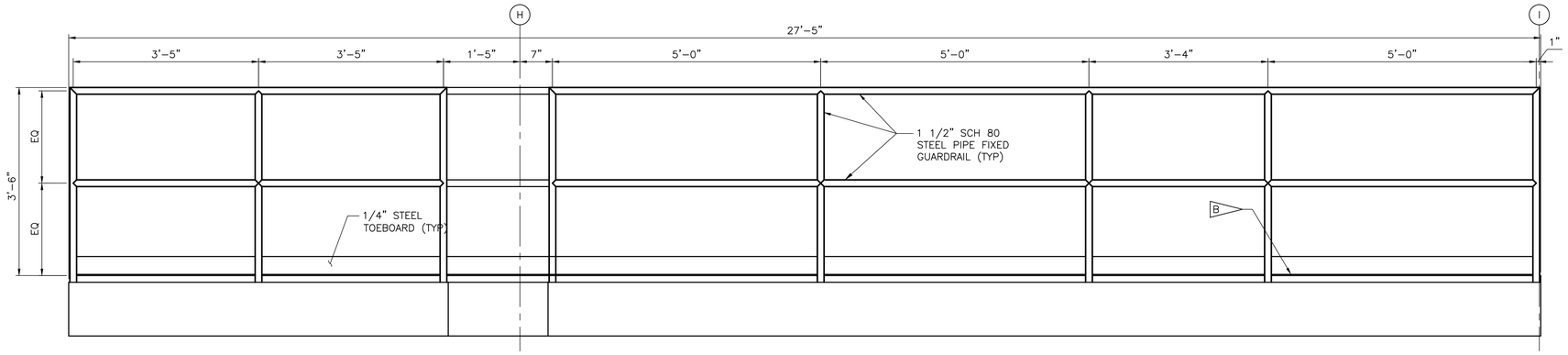

GUARDRAIL AT ELEVATOR LANDING PLATFORM (B / A-500)
SCALE: 1" = 1'-0"

SPECIFIC NOTES:

A. SEE DETAIL A/A-503 FOR GUARDRAIL DETAILS.

B STEEL DECK PLATES, SEE SHEETS S-401 AND S-402.

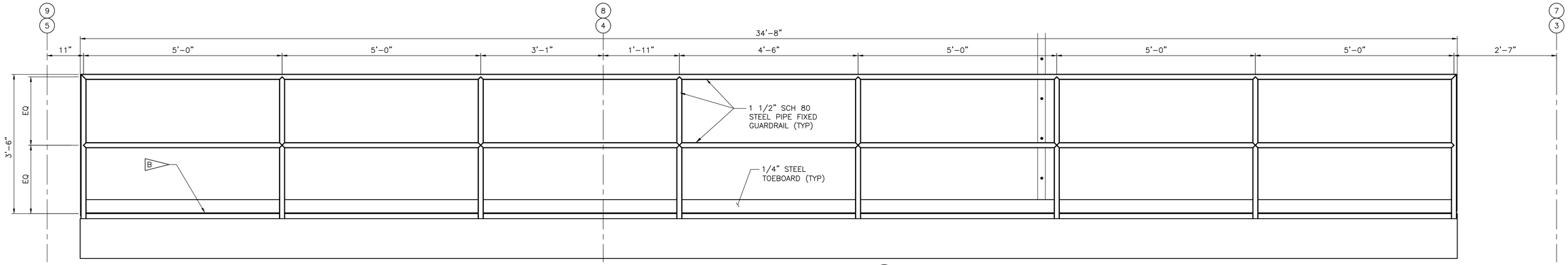

GUARDRAIL AT ELEVATOR LANDING PLATFORM (A / A-500)
SCALE: 1" = 1'-0"

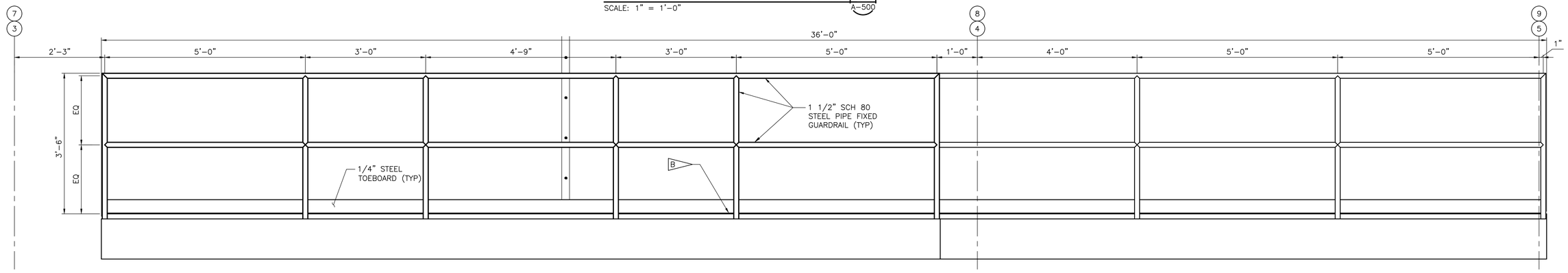

GUARDRAIL AT ELEVATOR LANDING PLATFORM (C / A-500)
SCALE: 1" = 1'-0"

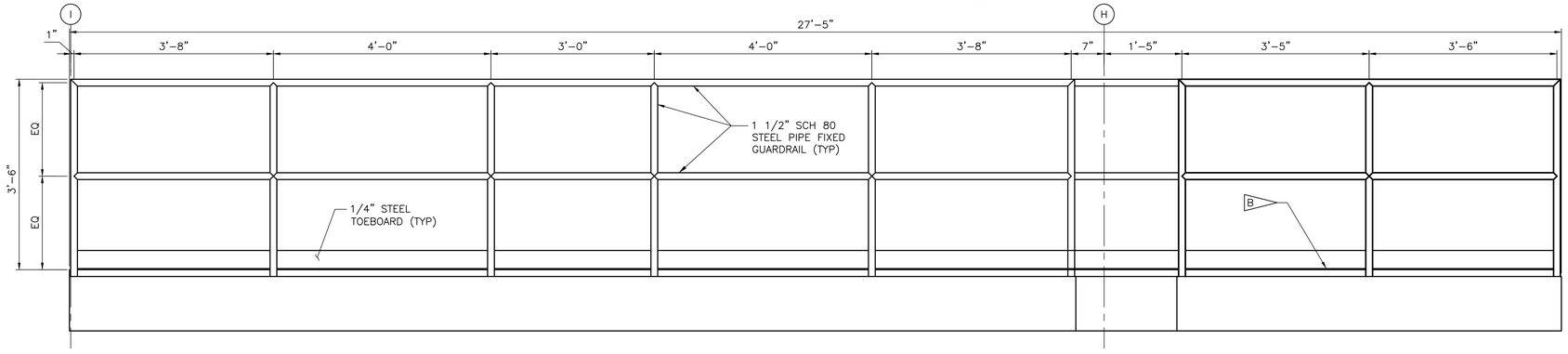

GUARDRAIL AT ELEVATOR LANDING PLATFORM (D / A-500)
SCALE: 1" = 1'-0"

1 9" 6" 3" 0 1 2
1 IN = 1 FT

WHEN PRINTED FULL SIZE, THIS SHEET IS 34"X44"
THIS COMPUTER DRAWING WAS
CREATED IN AUTOCAD AND
FILED UNDER THE DRAWING NUMBER

A-502

SYM	ZONE	DESCRIPTION	DATE	APPROVAL
		REVISIONS		

RS&H IMPROVING YOUR WORLD
Reynolds, Smith and Hills, Inc.
115 Alma Blvd, Suite 101
Merritt Island, Florida 32953-4101
(321) 453-0212 (321) 453-0223 FAX
www.rsandh.com

SIGNATURES		DATE
DRAWN:	BRIAN CURTIS	08-20-2013
CHECKED:	ALICE SCHULTZ	08-20-2013
SUBMITTED: ARCH/ENG OF RECORD	TONY MAZZA	
ST OF LICENSURE: FL		
LICENSE NO:		
APPROVED:	JOHN KERCSMAR	
	MIKE HARTNETT	

NATIONAL AERONAUTICS AND SPACE ADMINISTRATION
JOHN F. KENNEDY SPACE CENTER, NASA
KENNEDY SPACE CENTER, FLORIDA

LAUNCH COMPLEX 39
VEHICLE ASSEMBLY BUILDING

MODIFY VEHICLE ASSEMBLY BUILDING HIGH BAY 3 FOR SLS – HOISTS GUARDRAIL ELEVATIONS AND DETAILS

FILE NO.	SIZE	DWG. NO.	REV
302-6058-043	E	79K39667	

PROJ. NO. PCN 99000.5 SHEET 11 OF

NOTICE -- WHEN GOVERNMENT DRAWINGS, SPECIFICATIONS, OR OTHER DATA ARE USED FOR ANY PURPOSE OTHER THAN IN CONNECTION WITH A DEFINITELY RELATED GOVERNMENT PROCUREMENT OPERATION, THE UNITED STATES GOVERNMENT THEREBY INCURS NO RESPONSIBILITY NOR ANY OBLIGATION WHATSOEVER; AND THE FACT THAT THE GOVERNMENT MAY HAVE FORMULATED, FURNISHED, OR IN ANY WAY SUPPLIED THE SAID DRAWINGS, SPECIFICATIONS, OR ANY OTHER DATA IS NOT TO BE REGARDED BY IMPLICATION, OR OTHERWISE AS IN ANY MANNER LICENSING THE HOLDER OR ANY OTHER PERSON OR CORPORATION, OR CONVEYING ANY RIGHTS OR PERMISSION TO MANUFACTURE, USE, OR SELL ANY PATENTED INVENTION THAT IN ANY WAY BE RELATED THERETO.

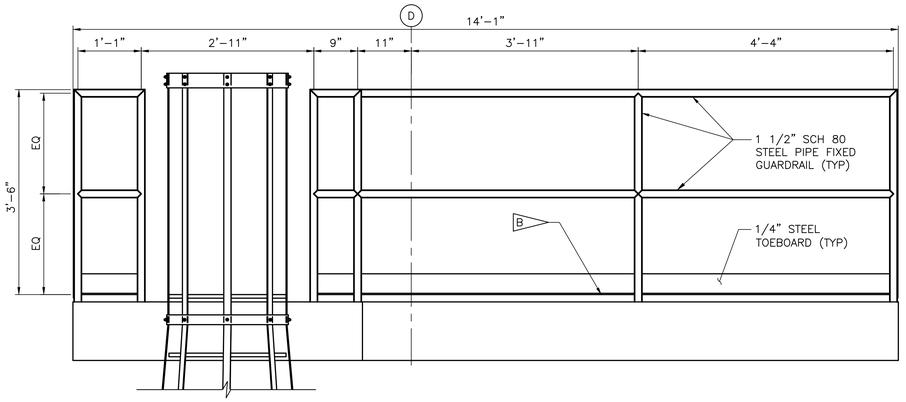

GUARDRAIL AT NEW SERVICE PLATFORM (F / A-500)
SCALE: 1" = 1'-0"

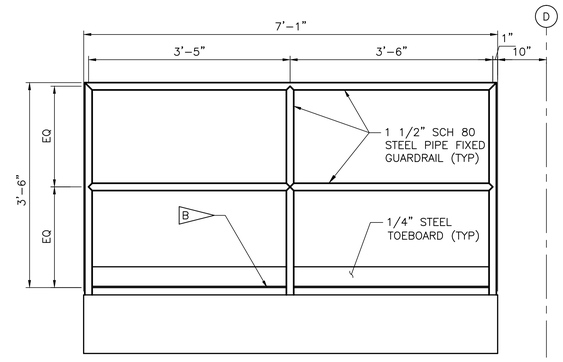

GUARDRAIL AT NEW SERVICE PLATFORM (G / A-500)
SCALE: 1" = 1'-0"

SPECIFIC NOTES:

A. SEE DETAIL A FOR GUARDRAIL DETAILS.

B. STEEL DECK PLATES, SEE SHEETS S-401 AND S-402.

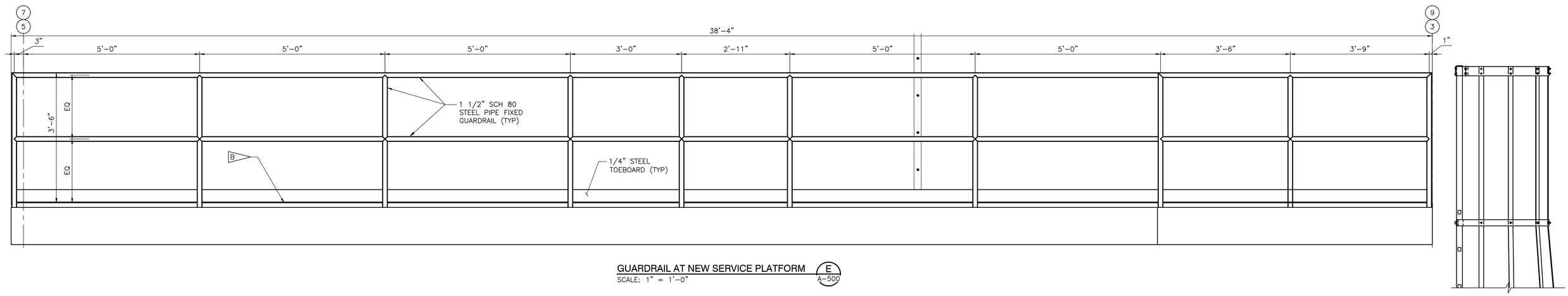

GUARDRAIL AT NEW SERVICE PLATFORM (E / A-500)
SCALE: 1" = 1'-0"

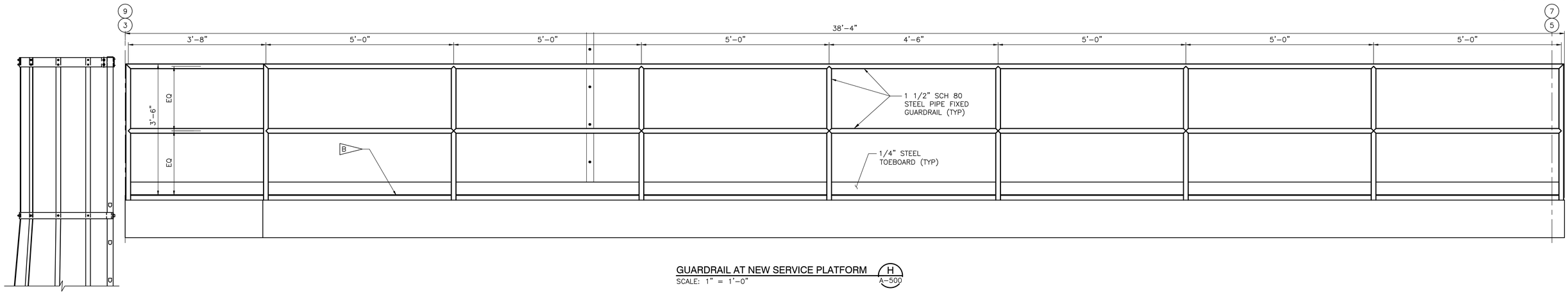

GUARDRAIL AT NEW SERVICE PLATFORM (H / A-500)
SCALE: 1" = 1'-0"

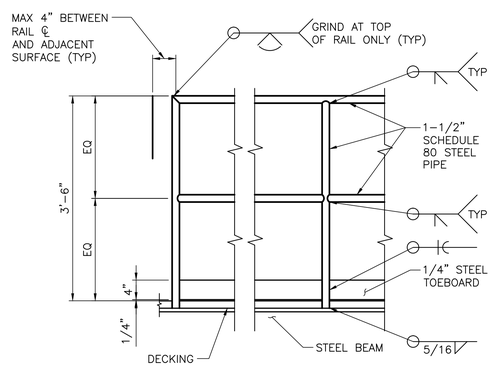

TYPICAL STEEL GUARDRAIL FLUSH MOUNTED

DETAIL (A / -)
SCALE: 1" = 1'-0"

1 9" 6" 3" 0 1 2
1 IN = 1 FT

WHEN PRINTED FULL SIZE, THIS SHEET IS 34"X44"
THIS COMPUTER DRAWING WAS
CREATED IN AUTOCAD AND
FILED UNDER THE DRAWING NUMBER

A-503

SYM	ZONE	DESCRIPTION	DATE	APPROVAL
		REVISIONS		

RS&H IMPROVING YOUR WORLD
Reynolds, Smith and Hills, Inc.
115 Alma Blvd, Suite 101
Merritt Island, Florida 32953-4101
(321) 453-0212 (321) 453-0223 FAX
www.rsandh.com

SIGNATURES		DATE
DRAWN:	BIRIAN CURTIS	08-20-2013
CHECKED:	ALICE SCHULTZ	08-20-2013
SUBMITTED: ARCH/ENG OF RECORD:	TONY MAZZA	
ST OF LICENSURE: FL LICENSE NO:		
APPROVED:	JOHN KERCSMAR	
	MIKE HARTNETT	

NATIONAL AERONAUTICS AND SPACE ADMINISTRATION
JOHN F. KENNEDY SPACE CENTER, NASA
KENNEDY SPACE CENTER, FLORIDA

LAUNCH COMPLEX 39
VEHICLE ASSEMBLY BUILDING

MODIFY VEHICLE ASSEMBLY BUILDING HIGH BAY 3 FOR SLS – HOISTS GUARDRAIL ELEVATIONS AND DETAILS

FILE NO.	SIZE	DWG. NO.	REV
302-6058-043	E	79K39667	

PROJ. NO. PCN 99000.5 SHEET 12 OF

NOTICE -- WHEN GOVERNMENT DRAWINGS, SPECIFICATIONS, OR OTHER DATA ARE USED FOR ANY PURPOSE OTHER THAN IN CONNECTION WITH A DEFINITELY RELATED GOVERNMENT PROCUREMENT OPERATION, THE UNITED STATES GOVERNMENT THEREBY INCURS NO RESPONSIBILITY NOR ANY OBLIGATION WHATSOEVER; AND THE FACT THAT THE GOVERNMENT MAY HAVE FORMULATED, FURNISHED, OR IN ANY WAY SUPPLIED THE SAID DRAWINGS, SPECIFICATIONS, OR ANY OTHER DATA IS NOT TO BE REGARDED BY IMPLICATION, OR OTHERWISE AS IN ANY MANNER LICENSING THE HOLDER OR ANY OTHER PERSON OR CORPORATION, OR CONVEYING ANY RIGHTS OR PERMISSION TO MANUFACTURE, USE, OR SELL ANY PATENTED INVENTION THAT IN ANY WAY BE RELATED THERETO.

SPECIFIC NOTES:

A. SEE DETAIL A/A-503 FOR GUARDRAIL DETAILS.

B. STEEL DECK PLATES, SEE SHEETS S-401 AND S-402.

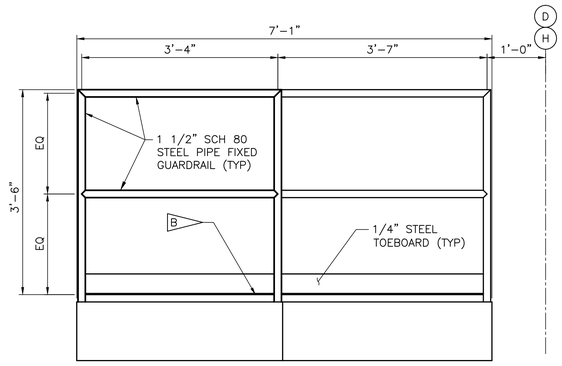

GUARDRAIL AT NEW SERVICE PLATFORM (B / A-501)
SCALE: 1" = 1'-0"

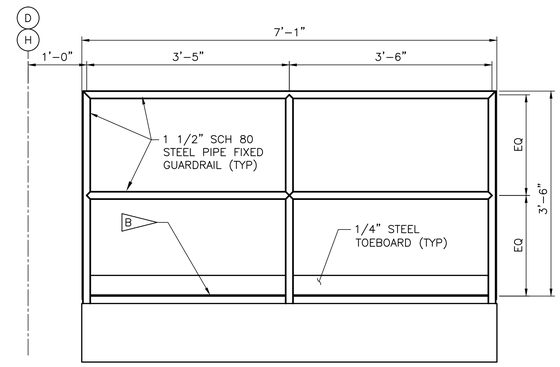

GUARDRAIL AT NEW SERVICE PLATFORM (E / A-501)
SCALE: 1" = 1'-0"

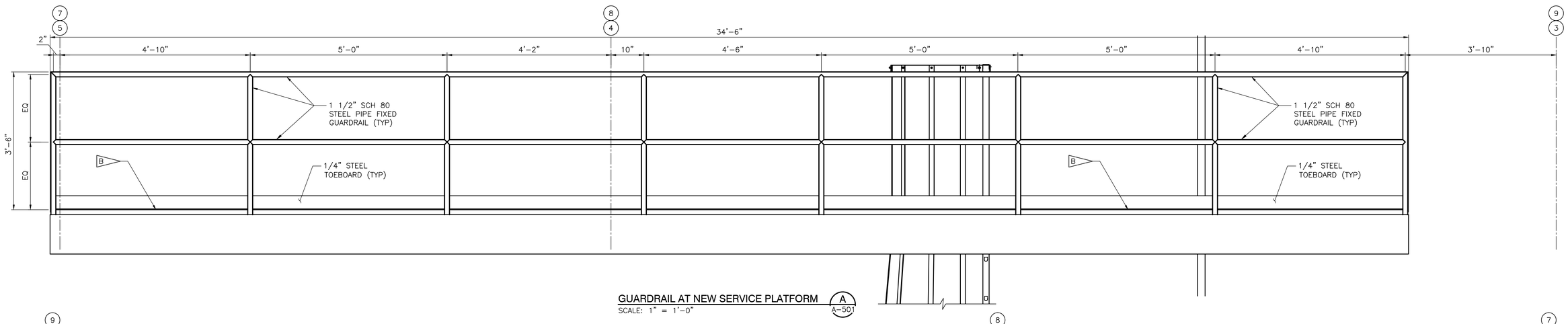

GUARDRAIL AT NEW SERVICE PLATFORM (A / A-501)
SCALE: 1" = 1'-0"

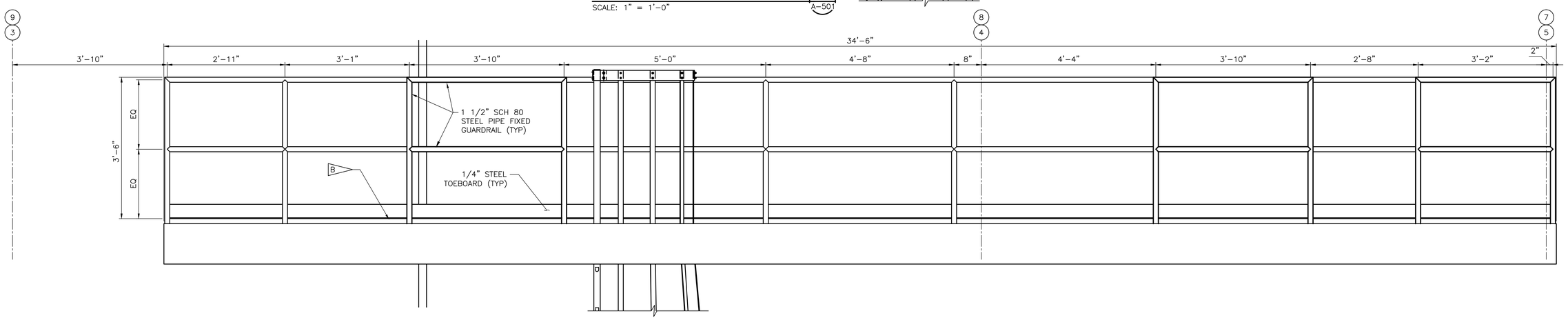

GUARDRAIL AT NEW SERVICE PLATFORM (C / A-501)
SCALE: 1" = 1'-0"

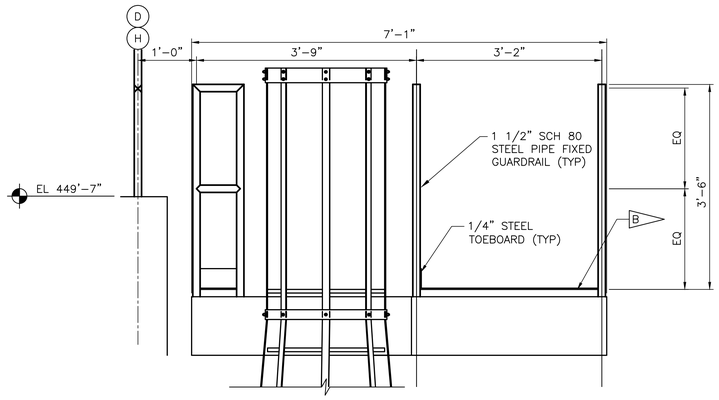

GUARDRAIL AT NEW SERVICE PLATFORM (D / A-501)
SCALE: 1" = 1'-0"

1 9" 6" 3" 0 1 2
1 IN = 1 FT

WHEN PRINTED FULL SIZE, THIS SHEET IS 34"X44"
THIS COMPUTER DRAWING WAS
CREATED IN AUTOCAD AND
FILED UNDER THE DRAWING NUMBER

A-504

SYM	ZONE	DESCRIPTION	DATE	APPROVAL
		REVISIONS		

RS&H IMPROVING YOUR WORLD
Reynolds, Smith and Hills, Inc.
115 Alma Blvd, Suite 101
Merritt Island, Florida 32953-4101
(321) 453-0212 (321) 453-0223 FAX
www.rsandh.com

SIGNATURES		DATE
DRAWN:	BRIAN CURTIS	08-20-2013
CHECKED:	ALICE SCHULTZ	08-20-2013
SUBMITTED: ARCH/ENG OF RECORD:	TONY MAZZA	
ST OF LICENSURE: FL LICENSE NO:		
APPROVED:	JOHN KERCSMAR	
	MIKE HARTNETT	

NATIONAL AERONAUTICS AND SPACE ADMINISTRATION
JOHN F. KENNEDY SPACE CENTER, NASA
KENNEDY SPACE CENTER, FLORIDA

LAUNCH COMPLEX 39
VEHICLE ASSEMBLY BUILDING

MODIFY VEHICLE ASSEMBLY BUILDING HIGH BAY 3 FOR SLS – HOISTS GUARDRAIL ELEVATIONS

FILE NO.	SIZE	DWG. NO.	REV
302-6058-043	E	79K39667	

PROJ. NO. PCN 99000.5 SHEET 13 OF

NOTICE -- WHEN GOVERNMENT DRAWINGS, SPECIFICATIONS, OR OTHER DATA ARE USED FOR ANY PURPOSE OTHER THAN IN CONNECTION WITH A DEFINITELY RELATED GOVERNMENT PROCUREMENT OPERATION, THE UNITED STATES GOVERNMENT THEREBY INCURS NO RESPONSIBILITY NOR ANY OBLIGATION WHATSOEVER; AND THE FACT THAT THE GOVERNMENT MAY HAVE FORMULATED, FURNISHED, OR IN ANY WAY SUPPLIED THE SAID DRAWINGS, SPECIFICATIONS, OR OTHER DATA IS NOT TO BE REGARDED BY IMPLICATION OR OTHERWISE IN ANY MANNER CONSTRUED TO LICENSE THE HOLDER OR ANY OTHER PERSON OR CORPORATION, OR CONVEYING ANY RIGHTS OR PERMISSION TO MANUFACTURE, USE, OR SELL ANY PATENTED INVENTION THAT IN ANY WAY BE RELATED THERETO.

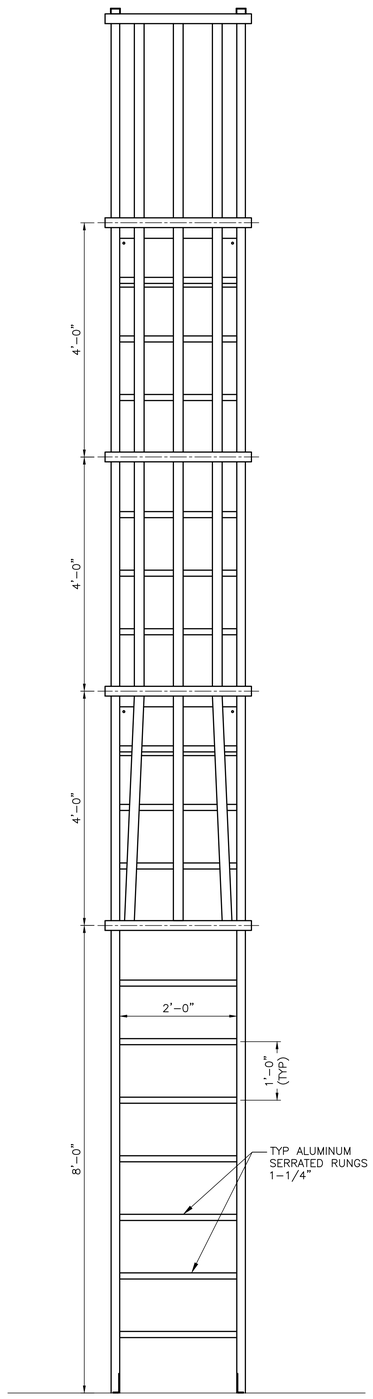

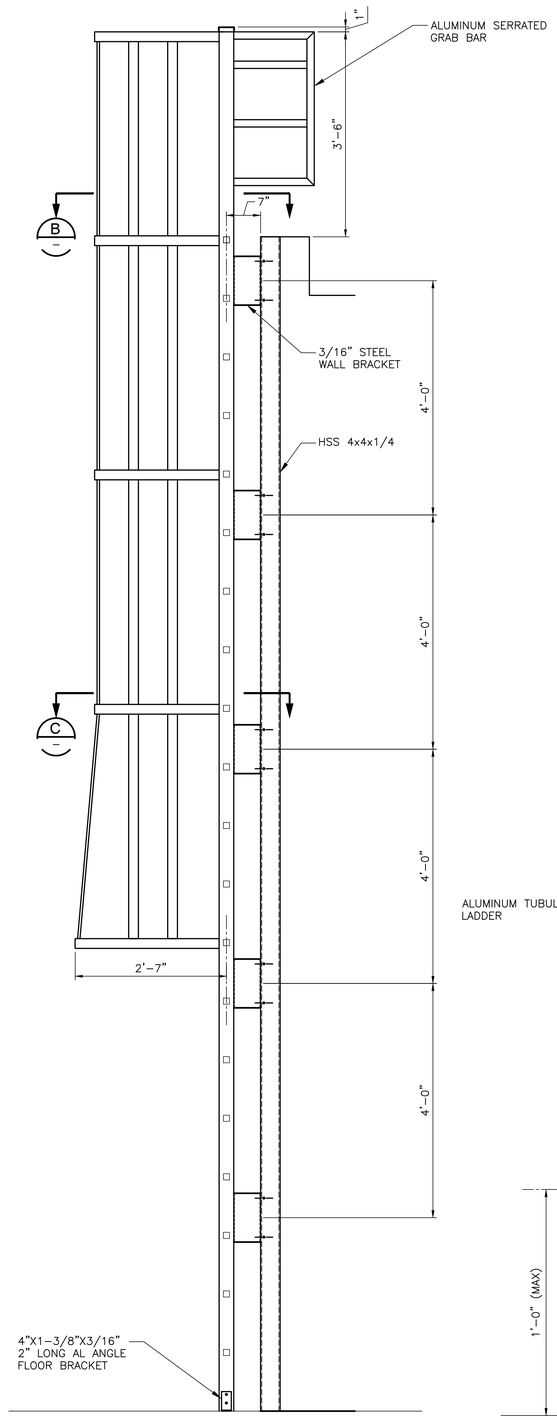

TYPICAL CAGED LADDER DETAIL (A)
SCALE: 1" = 1'-0"

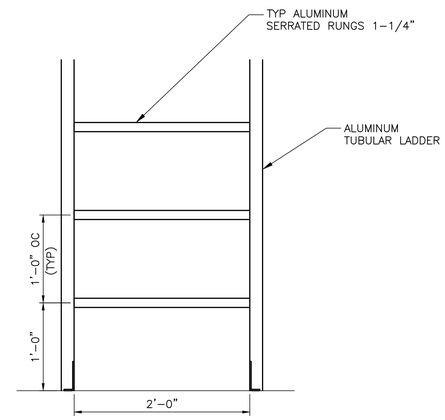

TYPICAL RUNG DETAIL
SCALE: 1 1/2" = 1'-0"

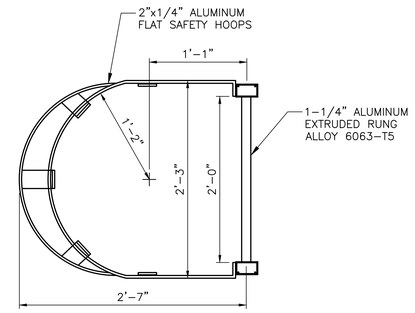

SECTION (B)
SCALE: 1 1/2" = 1'-0"

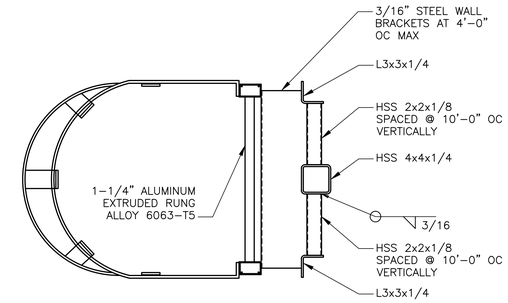

SECTION (C)
SCALE: 1 1/2" = 1'-0"

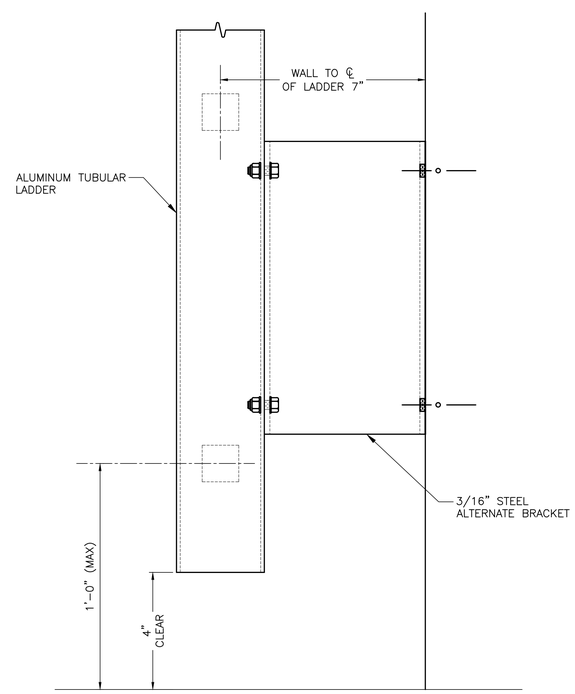

ALTERNATE OFF FLOOR SUPPORT
SCALE: 6" = 1'-0"

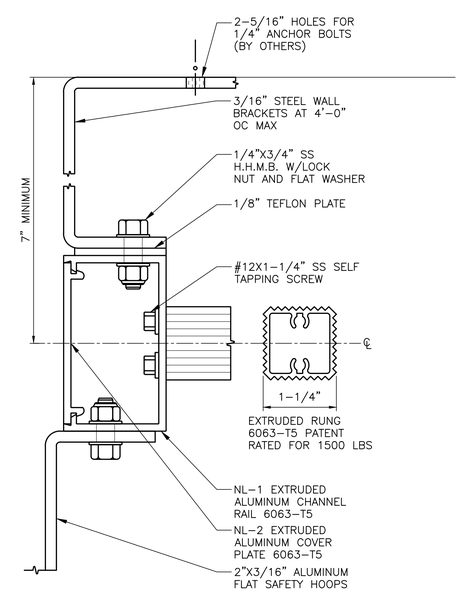

LADDER DETAILS
SCALE: 1" = 1'-0"

0 3" 6"
6 IN = 1 FT
1 9" 6" 3" 0 1 2
1 IN = 1 FT
1 9" 6" 3" 0 1
1 1/2 IN = 1 FT

WHEN PRINTED FULL SIZE, THIS SHEET IS 34"X44"
THIS COMPUTER DRAWING WAS CREATED IN AUTOCAD AND FILED UNDER THE DRAWING NUMBER

A-505

SYM	ZONE	DESCRIPTION	DATE	APPROVAL
		REVISIONS		

RS&H IMPROVING YOUR WORLD
Reynolds, Smith and Hills, Inc.
115 Alma Blvd, Suite 101
Merritt Island, Florida 32953-4101
(321) 453-0212 (321) 453-0223 FAX
www.rsandh.com

SIGNATURES		DATE
DRAWN:	BRIAN CURTIS	08-20-2013
CHECKED:	ALICE SCHULTZ	08-20-2013
SUBMITTED: ARCH/ENG OF RECORD:	TONY MAZZA	
ST OF LICENSURE: FL		
LICENSE NO:		
APPROVED:	JOHN KERCSMAR	
	MIKE HARTNETT	

NATIONAL AERONAUTICS AND SPACE ADMINISTRATION
JOHN F. KENNEDY SPACE CENTER, NASA
KENNEDY SPACE CENTER, FLORIDA

LAUNCH COMPLEX 39
VEHICLE ASSEMBLY BUILDING

MODIFY VEHICLE ASSEMBLY BUILDING HIGH BAY 3 FOR SLS – HOISTS LADDER DETAILS

FILE NO.	SIZE	DWG. NO.	REV
302-6058-043	E	79K39667	

PROJ. NO. PCN 99000.5 SHEET 14 OF

NOTICE -- WHEN GOVERNMENT DRAWINGS, SPECIFICATIONS, OR OTHER DATA ARE USED FOR ANY PURPOSE OTHER THAN IN CONNECTION WITH A DEFINITELY RELATED GOVERNMENT PROCUREMENT OPERATION, THE UNITED STATES GOVERNMENT THEREBY INCURS NO RESPONSIBILITY NOR ANY OBLIGATION WHATSOEVER; AND THE FACT THAT THE GOVERNMENT MAY HAVE FORMULATED, FURNISHED, OR IN ANY WAY SUPPLIED THE SAID DRAWINGS, SPECIFICATIONS, OR OTHER DATA IS NOT TO BE REGARDED BY IMPLICATION OR OTHERWISE IN ANY MANNER CONSTRUED TO LICENSE OR IMPLY ANY RIGHTS OF OWNERSHIP OR CORPORATION, OR CONVEYING ANY RIGHTS OR PERMISSION TO MANUFACTURE, USE, OR SELL ANY PATENTED INVENTION THAT IN ANY WAY BE RELATED THERETO.

1. GENERAL DEMOLITION NOTES:

1. THE CONTRACTOR SHALL CAREFULLY EXAMINE THE AREAS AND EXISTING CONDITIONS ASSOCIATED WITH THE WORK TO BE PERFORMED TO UNDERSTAND THE EXISTING FIELD CONDITIONS AND DIFFICULTIES THAT AFFECT EXECUTION OF THE WORK, AS WELL AS TO IDENTIFY SYSTEMS AND EQUIPMENT WHICH ARE TO REMAIN IN PLACE AND MUST BE PROTECTED FROM THE DEMOLITION ACTIVITIES.

2. THE CONTRACTOR SHALL REMOVE THE STRUCTURAL ITEMS AND EQUIPMENT IDENTIFIED ON THE DRAWINGS. ITEMS IDENTIFIED FOR REUSE/REINSTALLATION SHALL BE REMOVED, STORED AND PROTECTED DURING CONSTRUCTION ACTIVITIES. ITEMS MARKED TO BE DEMOLISHED AND TURNED OVER TO THE GOVERNMENT ARE THE PROPERTY OF THE GOVERNMENT AND WILL BE SEGREGATED, ITEMIZED AND DISPOSED PER INSTRUCTIONS OF THE CONTRACTING OFFICER.

3. THE CONTRACTOR SHALL DISPOSE OF DEBRIS RUBBISH AND OTHER NON-SALVAGEABLE MATERIALS PROMPTLY.

4. CONTRACTOR SHALL VERIFY QUANTITIES AND SHALL BE RESPONSIBLE FOR THE WORK WITHIN THE DESCRIPTION OF THE SCOPE.

5. THE CONTRACTOR MAY NOT ALTER ANY ELEMENT OUTSIDE THE SCOPE OF THIS PROJECT WITHOUT THE PRIOR APPROVAL OF THE CONTRACTING OFFICER.

6. THE CONTRACTOR SHALL PROVIDE OPENINGS THROUGH EXISTING SLABS AS REQUIRED BY THE HOIST MANUFACTURER. THE OPENINGS SHALL BE MADE AFTER THE INSTALLATION OF THE REQUIRED SECONDARY FRAMING PER NOTE B ON SHEET M-810. OPENING EDGES SHALL BE FREE OF ROUGH EDGES. EXPOSED REINFORCEMENT SHALL BE COATED PER PROJECT SPECIFICATIONS.

7. THE CONTRACTOR SHALL REMOVE THE EXISTING EQUIPMENT PADS WHERE NOTED. THE CONTRACTOR SHALL PROVIDE A CLASS A FINISH PER ACI 347-04 TO THE FLOOR UPON REMOVAL OF EQUIPMENT PAD.

8. THE CONTRACTOR SHALL COVER HOLES IN THE FLOOR EXPOSED BY HOIST REMOVAL WITH 1/4" THICK PATTERNED STEEL PLATE. THE CONTRACTOR SHALL PROVIDE A MINIMUM LAP WITH CONCRETE OF 3". SECURE TO CONCRETE USING 1/4" x 1-3/4" TITEN HD MINI ANCHOR OR APPROVED EQUAL. SPACE ANCHORS AT 8" ON CENTER AROUND PERIMETER.

2. GENERAL STRUCTURAL NOTES:

1. CONTRACTOR SHALL PROVIDE ALL TEMPORARY BRACING, SHORING, AND OTHER MEASURES TO PROTECT PERSONNEL, STRUCTURES UNDER CONSTRUCTION, AND ADJACENT STRUCTURES DURING CONSTRUCTION. CONTRACTOR SHALL FIELD VERIFY ALL EXISTING CONDITIONS IN ERECTION SITE PRIOR TO PROCEEDING WITH FABRICATION AND CONSTRUCTION.

3. STRUCTURAL STEEL DESIGN:

1. ALL WORK SHALL BE IN ACCORDANCE WITH THE AISC "SPECIFICATION FOR STRUCTURAL STEEL BUILDINGS" AND THE "CODE OF STANDARD PRACTICE" AS CONTAINED IN THE THIRTEENTH EDITION OF THE AISC STEEL CONSTRUCTION MANUAL WITH THE FOLLOWING EXCEPTION. DIMENSION TOLERANCES PRESCRIBED ON THE DRAWINGS ARE TO BE ADHERED TO AS WELL AS THE FABRICATION AND ERECTION TOLERANCES PRESENTED IN THE "CODE OF STANDARD PRACTICE."

2. STRUCTURAL STEEL PROPERTIES UNLESS OTHERWISE NOTED:

   PLATE THICKNESS <= 4":ASTM A572, GRADE 50
   HSS SHAPES: ASTM A500 GRADE B
   W SHAPES: ASTM A992
   ANGLES AND CHANNEL SHAPES:
   EXISTING: ASTM A36
   NEW: ASTM A572, GRADE 50
   PIPE SHAPES:
   DIAMETER <= 12": ASTM A53, GRADE B
   STRUCTURAL STEEL BOLTS: ASTM A325
   STRUCTURAL STEEL NUTS: ASTM A563
   STRUCTURAL STEEL WASHERS: ASTM F436

   ANY CARBON STEEL MATERIAL DESIGNATED TO BE HOT-DIPPED GALVANIZED SHALL BE GALVANIZED IN ACCORDANCE WITH ASTM A123. ALL CARBON STEEL FASTENERS AND HARDWARE SHALL BE GALVANIZED IN ACCORDANCE WITH ASTM A153.

3. WELDING SHALL BE IN ACCORDANCE WITH AWS D1.1 AND THE REQUIREMENTS OF NASA-SPEC-5004. WELDERS AND WELDING OPERATORS SHALL BE QUALIFIED IN ACCORDANCE WITH AWS D1.1 ALL WELDS REQUIRE A CLASS B INSPECTION UNLESS NOTED AS CLASS A IN THE WELD SYMBOL OR IN THE WELDMENT NOTATION.

4. SUBSTITUTIONS OF SPECIFIED MEMBER SIZE OR CHANGE IN DETAILS OR DIMENSIONS OF ANY KIND SHALL NOT BE PERMITTED WITHOUT PRIOR WRITTEN APPROVAL FROM THE CONTRACTING OFFICER OR HIS/HER DESIGNEE.

5. WELDED JOINTS SHALL CONFORM TO SECTION J2 OF THE AISC SPECIFICATION FOR STRUCTURAL STEEL BUILDINGS - ASD.

6. SHOP CONNECTIONS SHALL BE WELDED UNLESS OTHERWISE NOTED.

7. BRACING AND TRUSS CONNECTIONS SHALL BE SIZED TO DEVELOP THE LOAD SPECIFIED ON THE DESIGN DRAWINGS OR 75% OF THEIR TENSION CAPACITY. A MINIMUM CONNECTION SHALL CONSIST OF TWO BOLTS.

8. ALL CONNECTION SHOP DRAWINGS SHALL BE DESIGNED AND SEALED BY A REGISTERED FLORIDA P.E. COPIES OF ALL SHOP DRAWING CALCULATIONS SHALL BE SUBMITTED TO THE CONTRACTING OFFICER FOR APPROVAL AT SAME TIME AS CONNECTION SHOP DRAWINGS.

9. ERECTION BOLTS, PLATE SHIMS, AND TEMPORARY FASTENINGS REQUIRED FOR ERECTION SHALL BE FURNISHED BY THE STEEL ERECTOR. ALL PLATES, EXTRA FRAMING, AND OTHER COMPONENTS NOT DEPICTED ON THESE DRAWINGS THAT HAVE BEEN ADDED FOR EASE OF FABRICATION AND ERECTION SHALL BE REMOVED AFTER USE, AS WELL AS ANY SPATTER; AND WELD SCARS SHALL BE GROUND OFF AND REPAIRED. REPAIR COATINGS PER PROJECT SPECIFICATIONS.

10. SHOP AND FIELD SPLICES OF STRUCTURAL MEMBERS ARE PROHIBITED EXCEPT AS SHOWN ON THE DRAWING AND/OR PERMITTED IN THE SPECIFICATIONS AND AS SPECIFICALLY APPROVED ON SHOP DRAWINGS PRIOR TO FABRICATION.

11. BOLT HOLES SHALL NOT BE CUT, ALIGNED OR ENLARGED BY FLAME CUTTING.

12. MILLED ENDS FOR INTERMEDIATE OR BEARING STIFFENERS ARE NOT REQUIRED UNLESS NOTED OTHERWISE. WELD STIFFENERS AS INDICATED ON DRAWINGS.

13. AXIALLY STRESSED MEMBERS MEETING AT A POINT SHALL HAVE THEIR GRAVITY AXIS MEET AT A POINT IF PRACTICAL; IF NOT, PROVISIONS SHALL BE MADE FOR BENDING STRESSES DUE TO ECCENTRICITY.

14. GUSSET PLATES SHALL BE A MINIMUM OF 1/2" THICK. ANY CROSS SECTION OF THE GUSSET, WELD OR BOLT GROUP SHALL BE DESIGNED TO DEVELOP THE AXIAL LOAD INDICATED OR THE FULL CAPACITY OF THE BOLT GROUP, WHICHEVER IS LARGER, PLUS ANY BENDING DUE TO ECCENTRICITY. THIS THICKNESS REQUIREMENT DOES NOT APPLY TO SHEAR TABS FOR THE FLOOR STEEL CONNECTIONS.

15. BOLTED JOINTS SHALL CONFORM TO THE PROVISIONS OF SECTION J3 OF THE AISC SPECIFICATION FOR STRUCTURAL STEEL BUILDINGS - ASD.

16. SIZES, SPACING AND QUANTITY OF BOLTS FOR EQUIPMENT TO BE FURNISHED BY SUBCONTRACTORS SHALL BE DETERMINED BY THE CONTRACTOR AND COORDINATED WITH ALL SUBCONTRACTORS PRIOR TO PREPARATION OF SHOP DRAWINGS.

17. 17. ONE FOURTH INCH (1/4") THICKNESS WELDED CLOSURE PLATE SHALL BE PROVIDED AT OPEN ENDS OF ALL PIPE AND TUBULAR MEMBERS UNLESS OTHERWISE NOTED. CONNECT TO PIPE OR TUBULAR MEMBERS WITH 3/16" SINGLE BEVEL GROOVE WELD.

18. REQUESTS FOR PENETRATIONS THROUGH WIDE FLANGE BEAMS MUST BE APPROVED BY THE CONTRACTING OFFICER.

19. BREAK SHARP EDGES TO BE PAINTED WITH 1/8" RADIUS MINIMUM.

4. METAL CELLULAR DECK:

1. METAL CELLULAR DECKING SHALL BE 1.5BP 16/16 CELLULAR DECK:
   HEIGHT OF DECK: 1.5"
   NOMINAL WIDTH OF CELLS 3.5"
   MINIMUM HAT THICKNESS 16 GAUGE
   MINIMUM PAN THICKNESS 16 GAUGE
   DECK SECTION PROPERTIES (MINIMUM): Ip = 0.722in^4/FT, Sp = 0.644in^3/FT, Sn = 0.685 in^3/ft
   GALVANIZED ASTM A653 STEEL
   NO INTERNAL INSULATION
   BASIS OF DESIGN: VULCRAFT 1.5BP 16/16 CELLULAR DECK OR APPROVED EQUAL.

5. DESIGN CAPACITY:

1. MAINTENANCE PLATFORMS ARE DESIGNED FOR A LIVE LOADING OF 60 PSF. SEE ARCHITECTURAL NOTES FOR SIGNAGE.

WHEN PRINTED FULL SIZE, THIS SHEET IS 34"X44"
THIS COMPUTER DRAWING WAS
CREATED IN AUTOCAD AND
FILED UNDER THE DRAWING NUMBER

S-001

SYM	ZONE	DESCRIPTION	DATE	APPROVAL
		REVISIONS		

RS&H IMPROVING YOUR WORLD
Reynolds, Smith and Hills, Inc.
115 Alma Blvd, Suite 101
Merritt Island, Florida 32953-4101
(321) 453-0212 (321) 453-0223 FAX
www.rsandh.com

SIGNATURES		DATE
DRAWN:	JOSEPH HAUER	08-20-2013
CHECKED:	ROBERT PRUSS	08-20-2013
SUBMITTED: ARCHENG OF RECORD:	JAMES BALMER	
ST OF LICENSURE: FL LICENSE NO:		
APPROVED:	JOHN KERCSMAR	
	MIKE HARTNETT	

NATIONAL AERONAUTICS AND SPACE ADMINISTRATION
JOHN F. KENNEDY SPACE CENTER, NASA
KENNEDY SPACE CENTER, FLORIDA

LAUNCH COMPLEX 39
VEHICLE ASSEMBLY BUILDING
MODIFY VEHICLE ASSEMBLY BUILDING
HIGH BAY 3 FOR SLS - HOISTS

STRUCTURAL GENERAL NOTES

FILE NO.	SIZE	DWG. NO.	REV
302-6058-043	E	79K39667	

PROJ. NO. PCN 99000.5 SHEET 16 OF

NOTICE -- WHEN GOVERNMENT DRAWINGS, SPECIFICATIONS, OR OTHER DATA ARE USED FOR ANY PURPOSE OTHER THAN IN CONNECTION WITH A DEFINITELY RELATED GOVERNMENT PROCUREMENT OPERATION, THE UNITED STATES GOVERNMENT THEREBY INCURS NO RESPONSIBILITY NOR ANY OBLIGATION WHATSOEVER; AND THE FACT THAT THE GOVERNMENT MAY HAVE FORMULATED, FURNISHED, OR IN ANY WAY SUPPLIED THE SAID DRAWINGS, SPECIFICATIONS, OR OTHER DATA IS NOT TO BE REGARDED BY IMPLICATION, OR OTHERWISE IN ANY MANNER CONSTRUED, TO LICENSE OR ANY OTHER PERSON OR CORPORATION, OR CONVEYING ANY RIGHTS OR PERMISSION TO MANUFACTURE, USE, OR SELL ANY PATENTED INVENTION THAT IN ANY WAY BE RELATED THERETO.

SPECIFIC NOTES:

A. REMOVE EXISTING W14X142 COLUMN AND SUPPORTING TUBE SHAPED CONNECTORS DETAILED ON SHEET S-3-172 OF VOL. 5 OF AS-BUILT DRAWINGS. FILE NO. 203-28,297 FROM EL. 430' TO EL. 457'.

B. EXTENSIBLE PLATFORM HOIST HOOK.

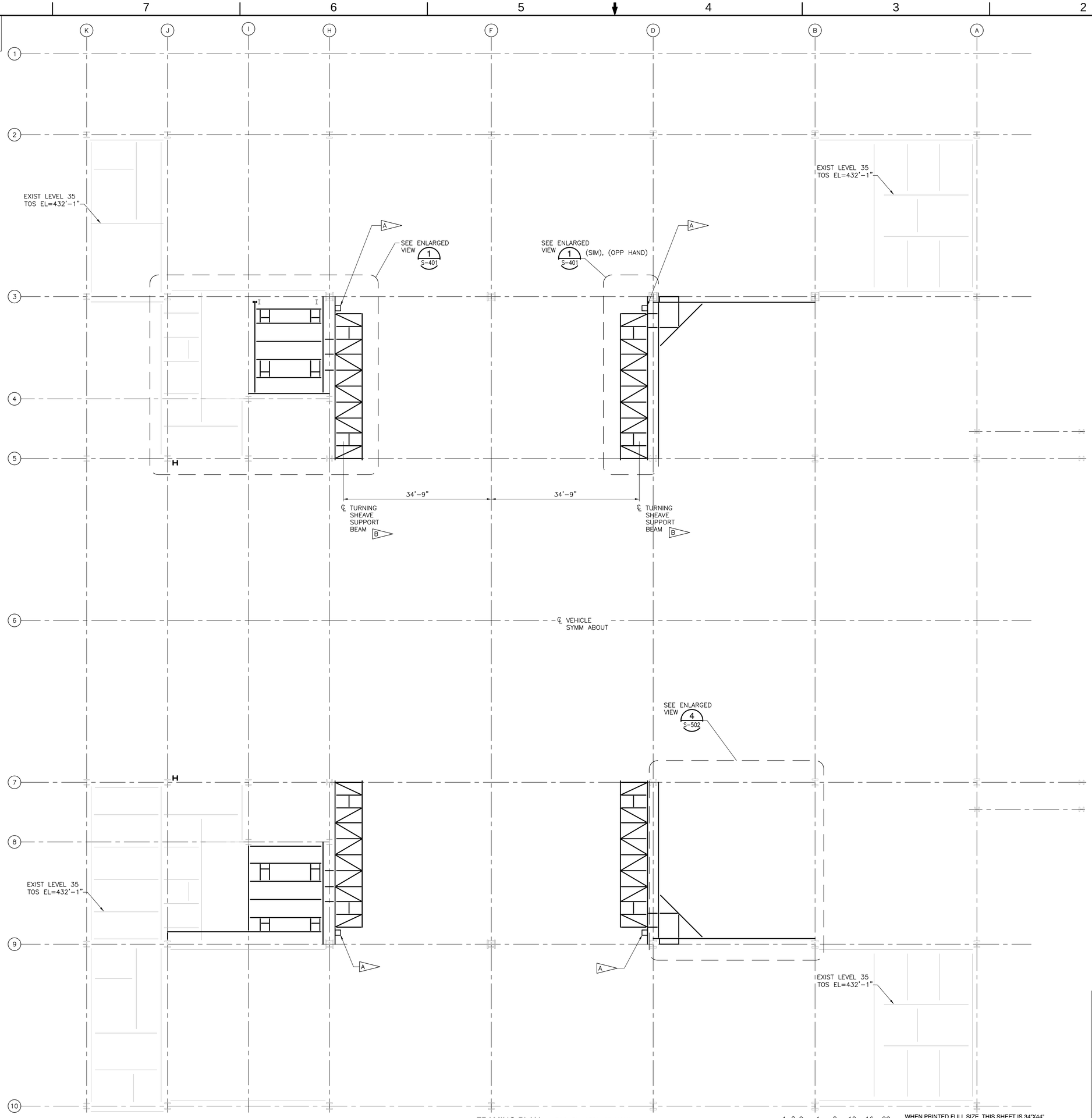

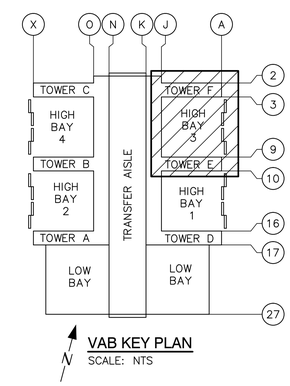

VAB KEY PLAN
SCALE: NTS

FRAMING PLAN (TOS EL=438'-6" UON)
SCALE: 1/8"=1'-0"

4 2 0 4 8 12 16 20
1/8 IN = 1 FT

WHEN PRINTED FULL SIZE, THIS SHEET IS 34"X44"
THIS COMPUTER DRAWING WAS CREATED IN AUTOCAD AND FILED UNDER THE DRAWING NUMBER

S-135

SYM	ZONE	DESCRIPTION	DATE	APPROVAL

REVISIONS

RS&H IMPROVING YOUR WORLD
Reynolds, Smith and Hills, Inc.
115 Alma Blvd, Suite 101
Merritt Island, Florida 32953-4101
(321) 453-0212 (321) 453-0223 FAX
www.rsandh.com

SIGNATURES		DATE
DRAWN:	JOSEPH HAUER	08-20-2013
CHECKED:	PAUL TAYLOR	08-20-2013
SUBMITTED: ARCH/ENG OF RECORD:	JAMES BALMER	
ST OF LICENSURE: FL LICENSE NO:		
APPROVED:	JOHN KERCSMAR	
	MIKE HARTNETT	

NATIONAL AERONAUTICS AND SPACE ADMINISTRATION
JOHN F. KENNEDY SPACE CENTER, NASA
KENNEDY SPACE CENTER, FLORIDA

LAUNCH COMPLEX 39
VEHICLE ASSEMBLY BUILDING

MODIFY VEHICLE ASSEMBLY BUILDING HIGH BAY 3 FOR SLS – HOISTS PLAN LEVEL 35

FILE NO.	SIZE	DWG. NO.	REV
302-6058-043	E	79K39667	

PROJ. NO. PCN 99000.5 SHEET 17 OF

NOTICE -- WHEN GOVERNMENT DRAWINGS, SPECIFICATIONS, OR OTHER DATA ARE USED FOR ANY PURPOSE OTHER THAN IN CONNECTION WITH A DEFINITELY RELATED GOVERNMENT PROCUREMENT OPERATION, THE UNITED STATES GOVERNMENT THEREBY INCURS NO RESPONSIBILITY NOR ANY OBLIGATION WHATSOEVER; AND THE FACT THAT THE GOVERNMENT MAY HAVE FORMULATED, FURNISHED, OR IN ANY WAY SUPPLIED THE SAID DRAWINGS, SPECIFICATIONS, OR OTHER DATA IS NOT TO BE REGARDED BY IMPLICATION, OR OTHERWISE IN ANY MANNER CONSTRUED, TO LICENSE THE HOLDER OR ANY OTHER PERSON OR CORPORATION, OR CONVEYING ANY RIGHTS OR PERMISSION TO MANUFACTURE, USE, OR SELL ANY PATENTED INVENTION THAT IN ANY MAY BE RELATED THERETO.

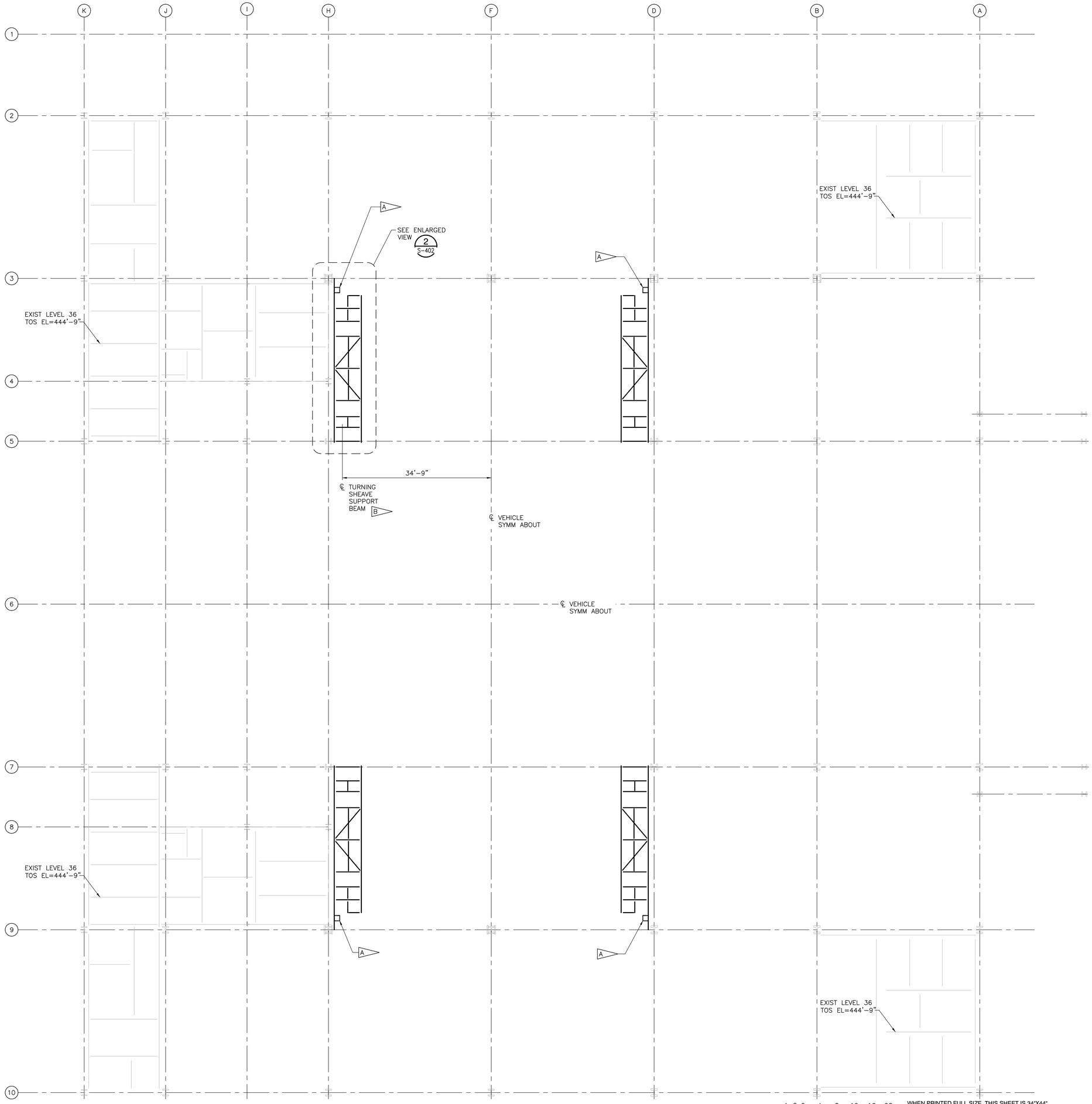

SPECIFIC NOTES:

A. REMOVE EXISTING W14X142 COLUMN AND SUPPORTING TUBE SHAPED CONNECTORS DETAILED ON SHEET S-3-172 OF VOL. 5 OF AS-BUILT DRAWINGS. FILE NO. 203-28,297 FROM EL. 430' TO EL. 457'.

B. EXTENSIBLE PLATFORM HOIST HOOK.

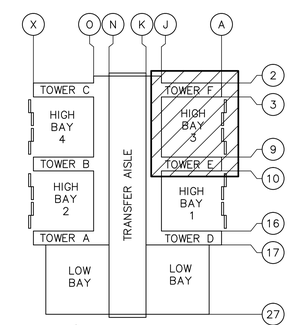

VAB KEY PLAN
SCALE: NTS

FRAMING PLAN (TOS EL=447'-9" UON)
SCALE: 1/8"=1'-0"

4 2 0 4 8 12 16 20
1/8 IN = 1 FT

WHEN PRINTED FULL SIZE, THIS SHEET IS 34"X44"
THIS COMPUTER DRAWING WAS CREATED IN AUTOCAD AND FILED UNDER THE DRAWING NUMBER

S-136

SYM	ZONE	DESCRIPTION	DATE	APPROVAL

REVISIONS

RS&H IMPROVING YOUR WORLD
Reynolds, Smith and Hills, Inc.
115 Alma Blvd, Suite 101
Merritt Island, Florida 32953-4101
(321) 453-0212 (321) 453-0223 FAX
www.rsandh.com

SIGNATURES		DATE
DRAWN:	JOSEPH HAUER	08-20-2013
CHECKED:	PAUL TAYLOR	08-20-2013
SUBMITTED: ARCH/ENG OF RECORD:	JAMES BALMER	
ST OF LICENSURE: FL		
LICENSE NO:		
APPROVED:	JOHN KERCSMAR	
	MIKE HARTNETT	

NATIONAL AERONAUTICS AND SPACE ADMINISTRATION
JOHN F. KENNEDY SPACE CENTER, NASA
KENNEDY SPACE CENTER, FLORIDA

LAUNCH COMPLEX 39
VEHICLE ASSEMBLY BUILDING
MODIFY VEHICLE ASSEMBLY BUILDING
HIGH BAY 3 FOR SLS - HOISTS
PLAN
LEVEL 36

FILE NO.	SIZE	DWG. NO.	REV
302-6058-043	E	79K39667	

PROJ. NO. PCN 99000.5 SHEET 18 OF

NOTICE -- WHEN GOVERNMENT DRAWINGS, SPECIFICATIONS, OR OTHER DATA ARE USED FOR ANY PURPOSE OTHER THAN IN CONNECTION WITH A DEFINITELY RELATED GOVERNMENT PROCUREMENT OPERATION, THE UNITED STATES GOVERNMENT THEREBY INCURS NO RESPONSIBILITY NOR ANY OBLIGATION WHATSOEVER; AND THE FACT THAT THE GOVERNMENT MAY HAVE FORMULATED, FURNISHED, OR IN ANY WAY SUPPLIED THE SAID DRAWINGS, SPECIFICATIONS, OR OTHER DATA IS NOT TO BE REGARDED BY IMPLICATION OR OTHERWISE IN ANY MANNER CONSTRUED AS LICENSING THE HOLDER OR ANY OTHER PERSON OR CORPORATION, OR CONVEYING ANY RIGHTS OR PERMISSION TO MANUFACTURE, USE, OR SELL ANY PATENTED INVENTION THAT IN ANY WAY BE RELATED THERETO.

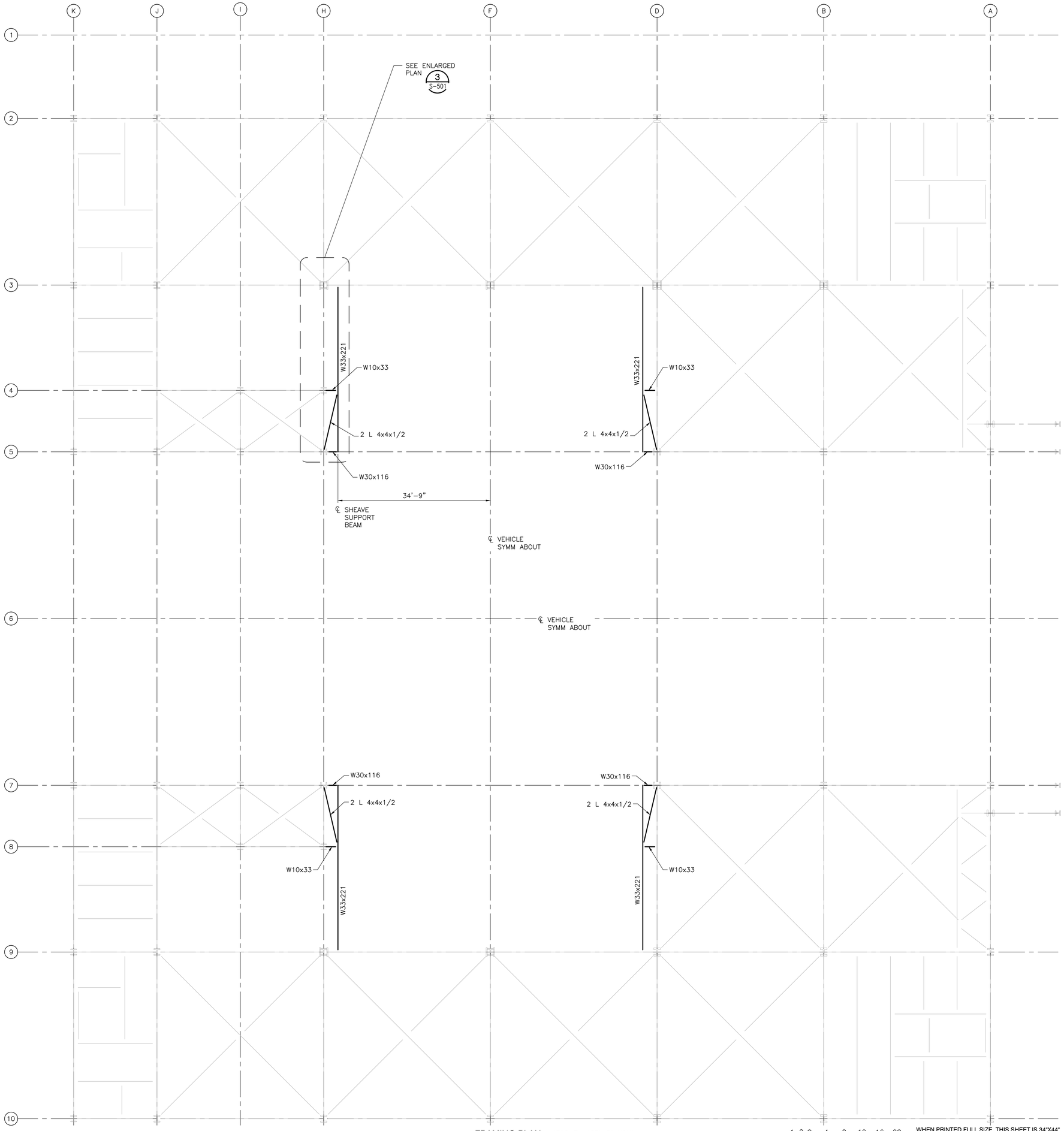

FRAMING PLAN (TOS EL=457'-5" UON)
SCALE: 1/8"=1'-0"

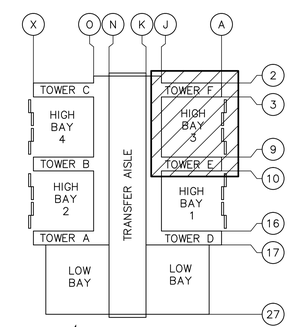

VAB KEY PLAN
SCALE: NTS

4 2 0 4 8 12 16 20
1/8 IN = 1 FT

WHEN PRINTED FULL SIZE, THIS SHEET IS 34"X44"
THIS COMPUTER DRAWING WAS CREATED IN AUTOCAD AND FILED UNDER THE DRAWING NUMBER

S-137

SYM	ZONE	DESCRIPTION	DATE	APPROVAL

REVISIONS

RS&H IMPROVING YOUR WORLD
Reynolds, Smith and Hills, Inc.
115 Alma Blvd, Suite 101
Merritt Island, Florida 32953-4101
(321) 453-0212 (321) 453-0223 FAX
www.rsandh.com

SIGNATURES		DATE
DRAWN:	LYNN SWEENY	08-20-2013
CHECKED:	PAUL TAYLOR	08-20-2013
SUBMITTED: ARCH/ENG OF RECORD:	JAMES BALMER	
ST OF LICENSURE: FL LICENSE NO:		
APPROVED:	JOHN KERCSMAR	
	MIKE HARTNETT	

NATIONAL AERONAUTICS AND SPACE ADMINISTRATION
JOHN F. KENNEDY SPACE CENTER, NASA
KENNEDY SPACE CENTER, FLORIDA

LAUNCH COMPLEX 39
VEHICLE ASSEMBLY BUILDING

MODIFY VEHICLE ASSEMBLY BUILDING HIGH BAY 3 FOR SLS – HOISTS PLAN LEVEL 37

FILE NO.	SIZE	DWG. NO.	REV
302-6058-043	E	79K39667	

PROJ. NO. PCN 99000.5 SHEET 19 OF

NOTICE -- WHEN GOVERNMENT DRAWINGS, SPECIFICATIONS, OR OTHER DATA ARE USED FOR ANY PURPOSE OTHER THAN IN CONNECTION WITH A DEFINITELY RELATED GOVERNMENT PROCUREMENT OPERATION, THE UNITED STATES GOVERNMENT THEREBY INCURS NO RESPONSIBILITY NOR ANY OBLIGATION WHATSOEVER; AND THE FACT THAT THE GOVERNMENT MAY HAVE FORMULATED, FURNISHED, OR IN ANY WAY SUPPLIED THE SAID DRAWINGS, SPECIFICATIONS, OR OTHER DATA IS NOT TO BE REGARDED BY IMPLICATION OR OTHERWISE IN ANY MANNER CONSTRUED AS LICENSING THE HOLDER OR ANY OTHER PERSON OR CORPORATION; OR CONVEYING ANY RIGHTS OR PERMISSION TO MANUFACTURE, USE, OR SELL ANY PATENTED INVENTION THAT IN ANY WAY BE RELATED THERETO.

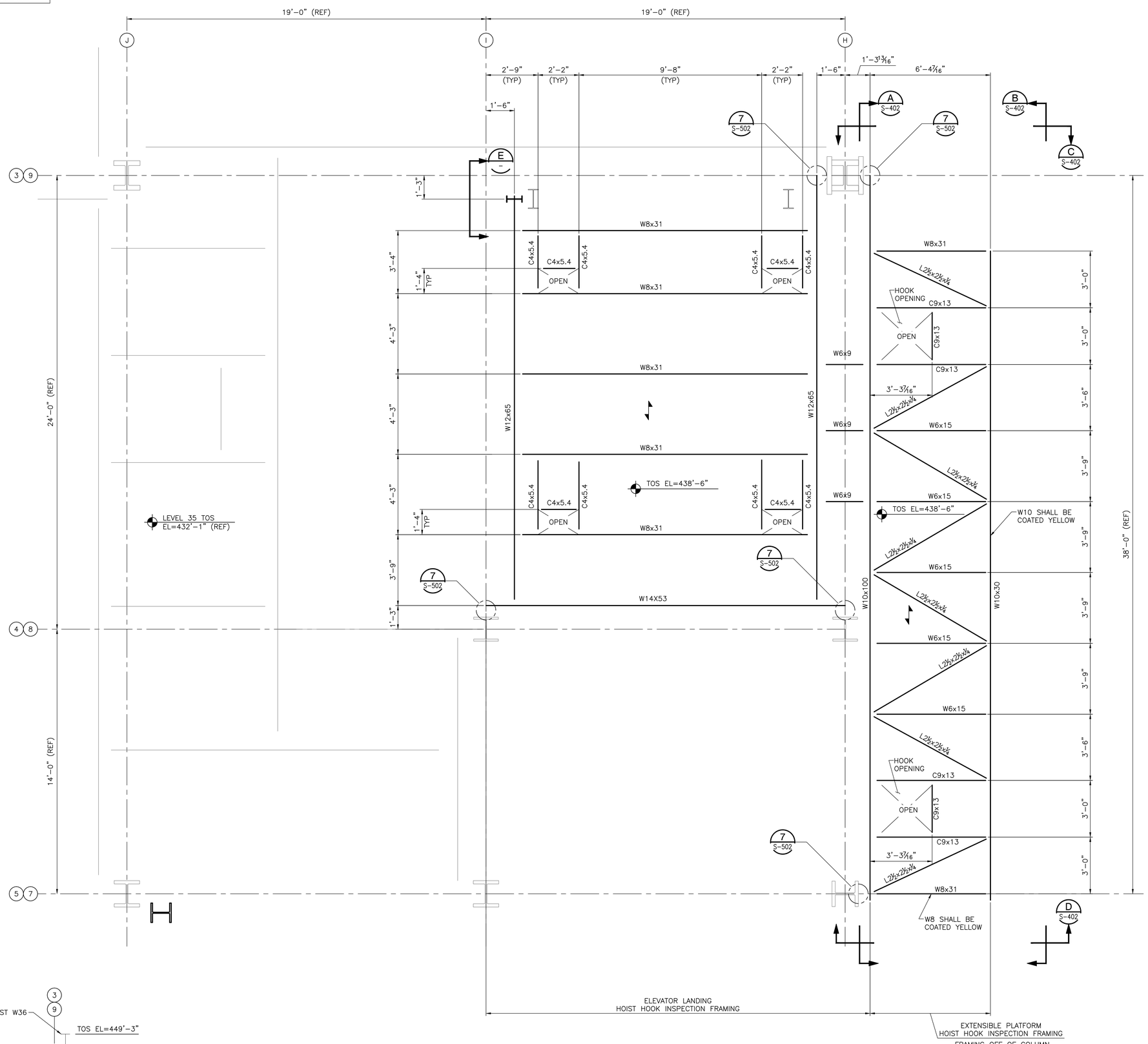

ENLARGED PARTIAL PLAN (LEVEL 35) (1 / S-135)

SCALE: 1/2"=1'-0"

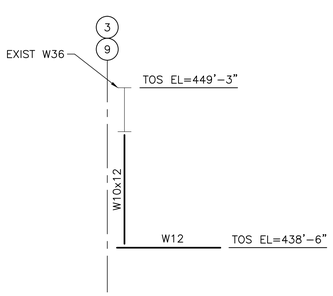

SECTION (E / -)

SCALE: 1/4"=1'-0"

SPECIFIC NOTES:

A. UON FRAMING MEMBERS SHALL BE STANDARD AISC CONNECTIONS DESIGNED TO THE 13th EDITION AISC STEEL MANUAL REQUIREMENTS. THE FOLLOWING MINIMUM DESIGN LOADS SHALL BE MET:

MINIMUM DESIGN LOADS FOR SHEAVE INSPECTION PLATFORM CONNECTIONS

SECTION	AXIAL COMPRESSION (kips)	AXIAL TENSION (kips)	SHEAR (kips)
W10X45	15	15	10
W10X22	5	15	6
W8X31	15	15	10
W6X20	8	10	6
W6X15	5	5	6
W4X13	15	10	6
C9X13	5	5	6
C6X13	5	5	6
L4x4x1/4	10	20	6
L2½x2½x1/4	5	5	6

MINIMUM DESIGN LOADS FOR ELEVATOR HOIST INSPECTION PLATFORM CONNECTIONS

SECTION	SHEAR (kips)
W14X90	20
W12X79	20
W12X65	30
W8X31	6
W8X21	6
C4X5	6

LEGEND:

1.5BP 16/16 INVERTED METAL CELLULAR DECK SPAN DIRECTION. PROVIDE 1⅜" HOLE THRU TOP OF DECK FOR FASTENER INSTALLATION. INSTALL ½" DIA-13 (A307/A325 HDG) THRU BOLT WITH HEAVY DUTY, LOCKING HEX NUTS (FLEXLOC NUTS BY SPS TECHNOLOGIES, OAE). ONLY 2 BOLTS PER 24" WIDE CELLULAR PANEL AT EACH BEAM ARE REQUIRED. PROVIDE SNAP BLANKS TO CLOSE HOLES IN TOP OF DECK. EXTEND DECKING TO EDGE OF PERIMETER BEAM FLANGES.

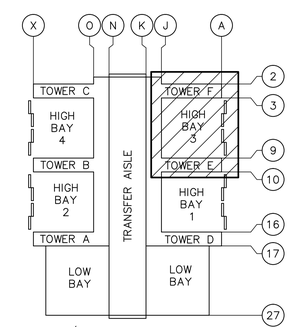

VAB KEY PLAN
SCALE: NTS

1 6" 0 1 2 3 4 5
1/2 IN = 1 FT

WHEN PRINTED FULL SIZE, THIS SHEET IS 34"X44"
THIS COMPUTER DRAWING WAS CREATED IN AUTOCAD AND FILED UNDER THE DRAWING NUMBER

S-401

SYM	ZONE	DESCRIPTION	DATE	APPROVAL

REVISIONS

RS&H IMPROVING YOUR WORLD
Reynolds, Smith and Hills, Inc.
115 Alma Blvd, Suite 101
Merritt Island, Florida 32953-4101
(321) 453-0212 (321) 453-0223 FAX
www.rsandh.com

SIGNATURES		DATE
DRAWN:	JOSEPH HAUER	08-20-2013
CHECKED:	ROBERT PRUSS	08-20-2013
SUBMITTED: ARCHENG OF RECORD:	JAMES BALMER	
ST OF LICENSURE: FL LICENSE NO:		
APPROVED:	JOHN KERCSMAR	
	MIKE HARTNETT	

NATIONAL AERONAUTICS AND SPACE ADMINISTRATION
JOHN F. KENNEDY SPACE CENTER, NASA
KENNEDY SPACE CENTER, FLORIDA

LAUNCH COMPLEX 39
VEHICLE ASSEMBLY BUILDING

MODIFY VEHICLE ASSEMBLY BUILDING HIGH BAY 3 FOR SLS – HOISTS ENLARGED FRAMING PLAN LEVEL 35

FILE NO. 302-6058-043 | SIZE E | DWG. NO. 79K39667 | REV

PROJ. NO. PCN 99000.5 | SHEET 20 OF

NOTICE -- WHEN GOVERNMENT DRAWINGS, SPECIFICATIONS, OR OTHER DATA ARE USED FOR ANY PURPOSE OTHER THAN IN CONNECTION WITH A DEFINITELY RELATED GOVERNMENT PROCUREMENT OPERATION, THE UNITED STATES GOVERNMENT THEREBY INCURS NO RESPONSIBILITY NOR ANY OBLIGATION WHATSOEVER; AND THE FACT THAT THE GOVERNMENT MAY HAVE FORMULATED, FURNISHED, OR IN ANY WAY SUPPLIED THE SAID DRAWINGS, SPECIFICATIONS, OR OTHER DATA IS NOT TO BE REGARDED BY IMPLICATION OR OTHERWISE IN ANY MANNER CONSTRUED, AS LICENSING THE HOLDER OR ANY OTHER PERSON OR CORPORATION, OR CONVEYING ANY RIGHTS OR PERMISSION TO MANUFACTURE, USE, OR SELL ANY PATENTED INVENTION THAT IN ANY MAY BE RELATED THERETO.

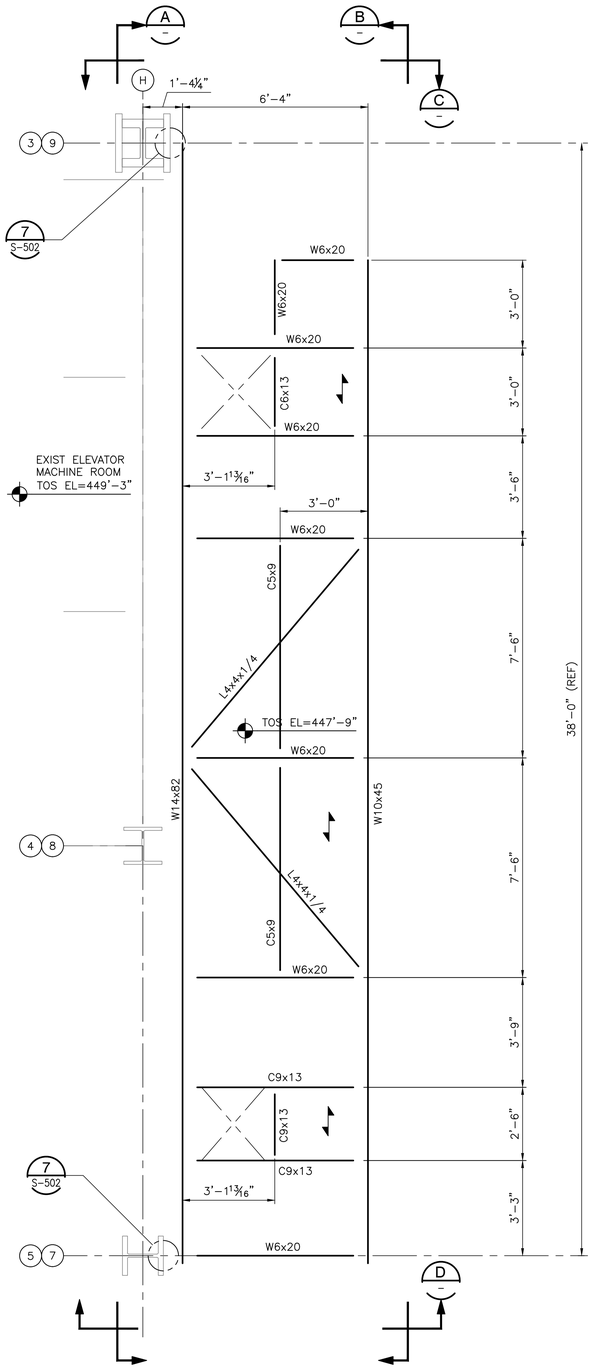

(TYPICAL 4 PLACES)

UPPER SHEAVE INSPECTION PLATFORM - PLAN (2 / S-136)

SCALE: 1/2"=1'-0"

FRAMING OFF OF COLUMN
LINE "D" OPPOSITE HAND

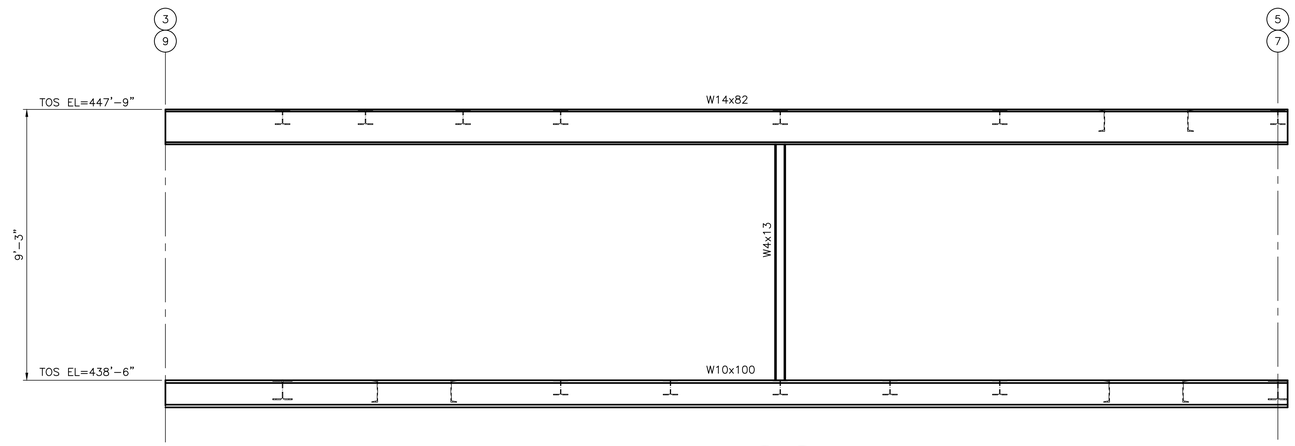

FRAMING ELEVATION (A / S-401 / A)

SCALE: 1/2"=1'-0"

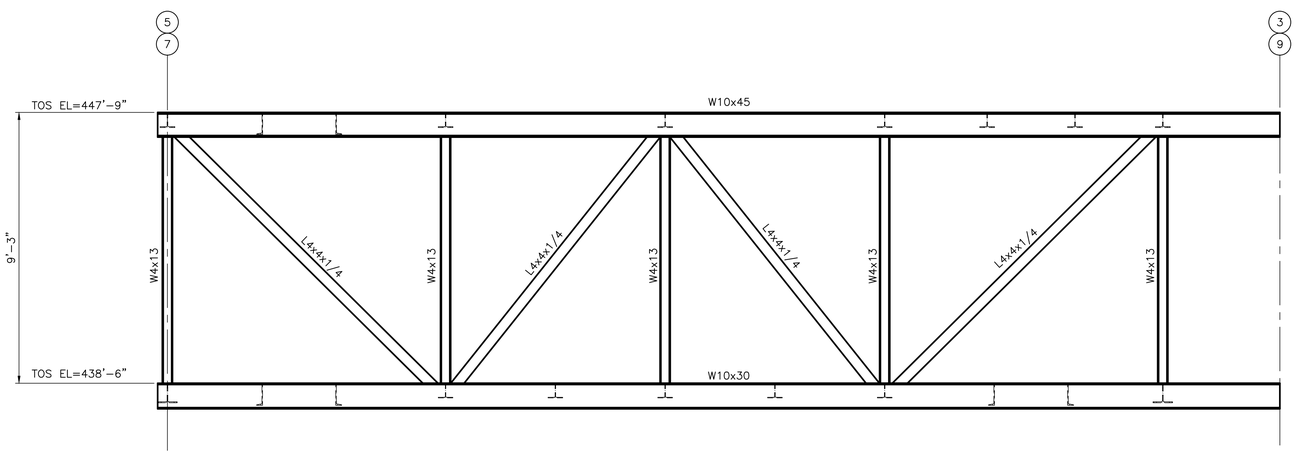

FRAMING ELEVATION (B / S-401 / B)

SCALE: 1/2"=1'-0"

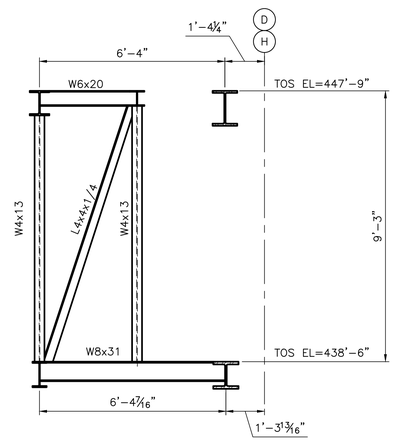

FRAMING ELEVATION (C / S-401 / C)

SCALE: 1/2"=1'-0"

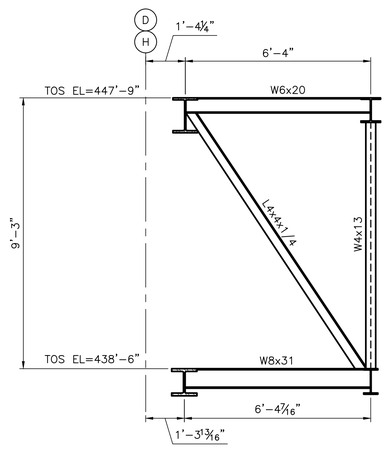

FRAMING ELEVATION (D / S-401 / D)

SCALE: 1/2"=1'-0"

NOTES:

A. UON FRAMING MEMBERS SHALL BE STANDARD AISC CONNECTIONS DESIGNED TO THE 13th EDITION AISC STEEL MANUAL REQUIREMENTS. THE FOLLOWING MINIMUM DESIGN LOADS SHALL BE MET:

MINIMUM DESIGN LOADS FOR SHEAVE INSPECTION PLATFORM CONNECTIONS

SECTION	AXIAL COMPRESSION (kips)	AXIAL TENSION (kips)	SHEAR (kips)
W10X45	15	15	10
W10X22	5	15	6
W8X31	15	15	10
W6X20	8	10	6
W6X15	5	5	6
W4X13	15	10	6
C9X13	5	5	6
C6X13	5	5	6
L4x4x1/4	10	20	6
L2½x2½x1/4	5	5	6

LEGEND:

1.5BP 16/16 INVERTED METAL CELLULAR DECK SPAN DIRECTION. PROVIDE 1⅜" HOLE THRU TOP OF DECK FOR FASTENER INSTALLATION. INSTALL ½" DIA-13 (A307/A325 HDG) THRU BOLT WITH HEAVY DUTY, LOCKING HEX NUTS (FLEXLOC NUTS BY SPS TECHNOLOGIES, OAE). ONLY 2 BOLTS PER 24" WIDE CELLULAR PANEL AT EACH BEAM ARE REQUIRED. PROVIDE SNAP BLANKS TO CLOSE HOLES IN TOP OF DECK. EXTEND DECKING TO EDGE OF PERIMETER BEAM FLANGES.

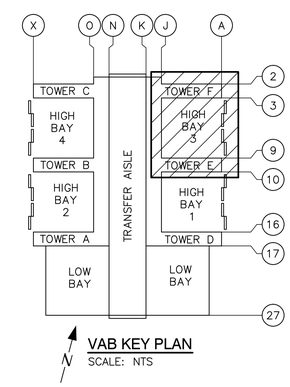

VAB KEY PLAN

SCALE: NTS

1 6" 0 1 2 3 4 5

1/2 IN = 1 FT

WHEN PRINTED FULL SIZE, THIS SHEET IS 34"X44"
THIS COMPUTER DRAWING WAS
CREATED IN AUTOCAD AND
FILED UNDER THE DRAWING NUMBER

S-402

SYM	ZONE	DESCRIPTION	DATE	APPROVAL
		REVISIONS		

RS&H IMPROVING YOUR WORLD
Reynolds, Smith and Hills, Inc.
115 Alma Blvd, Suite 101
Merritt Island, Florida 32953-4101
(321) 453-0212 (321) 453-0223 FAX
www.rsandh.com

SIGNATURES		DATE
DRAWN:	JOSEPH HAUER	08-20-2013
CHECKED:	ROBERT PRUSS	08-20-2013
SUBMITTED: ARCHENG OF RECORD:	JAMES BALMER	
ST OF LICENSURE: FL LICENSE NO:		
APPROVED:	JOHN KERCSMAR	
	MIKE HARTNETT	

NATIONAL AERONAUTICS AND SPACE ADMINISTRATION
JOHN F. KENNEDY SPACE CENTER, NASA
KENNEDY SPACE CENTER, FLORIDA

LAUNCH COMPLEX 39
VEHICLE ASSEMBLY BUILDING

MODIFY VEHICLE ASSEMBLY BUILDING HIGH BAY 3 FOR SLS – HOISTS ENLARGED FRAMING PLAN AND ELEVATIONS LEVEL 36

FILE NO.	SIZE	DWG. NO.	REV
302-6058-043	E	79K39667	

PROJ. NO. PCN 99000.5 SHEET 21 OF

NOTICE -- WHEN GOVERNMENT DRAWINGS, SPECIFICATIONS, OR OTHER DATA ARE USED FOR ANY PURPOSE OTHER THAN IN CONNECTION WITH A DEFINITELY RELATED GOVERNMENT PROCUREMENT OPERATION, THE UNITED STATES GOVERNMENT THEREBY INCURS NO RESPONSIBILITY NOR ANY OBLIGATION WHATSOEVER; AND THE FACT THAT THE GOVERNMENT MAY HAVE FORMULATED, FURNISHED, OR IN ANY WAY SUPPLIED THE SAID DRAWINGS, SPECIFICATIONS, OR OTHER DATA IS NOT TO BE REGARDED BY IMPLICATION OR OTHERWISE IN ANY MANNER CONSTRUED, AS MAKING THE HOLDER OR ANY OTHER PERSON OR CORPORATION, OR CONVEYING ANY RIGHTS OR PERMISSION TO MANUFACTURE, USE, OR SELL ANY PATENTED INVENTION THAT IN ANY WAY BE RELATED THERETO.

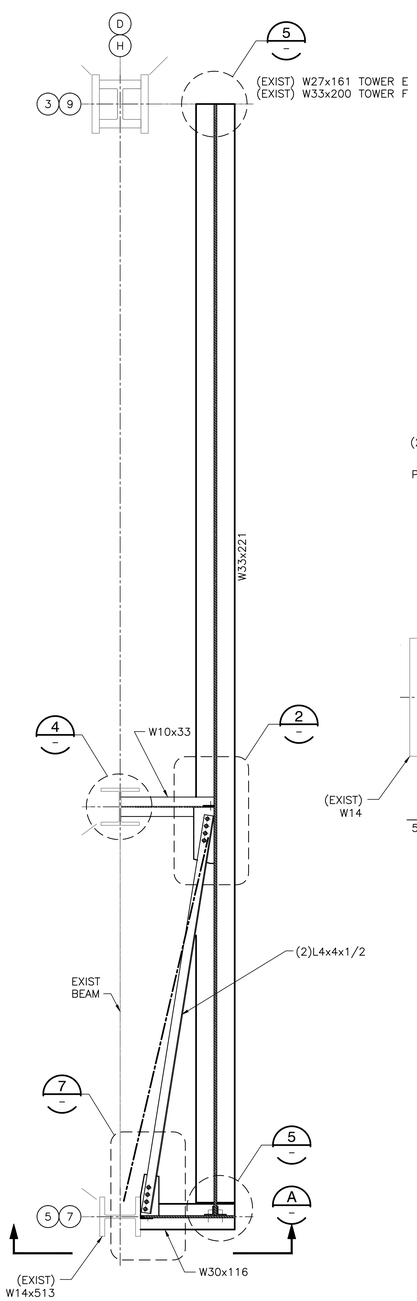

NOTE: TOP FLANGE NOT SHOWN FOR CLARITY.

ENLARGED PLAN (3 / S-137)
SCALE: 1/2"=1'-0"

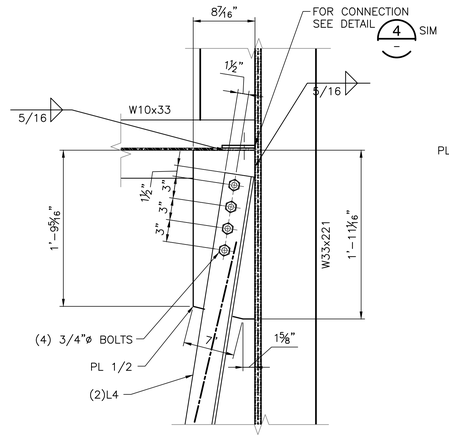

DETAIL (2)
SCALE: 1 1/2" = 1'-0"

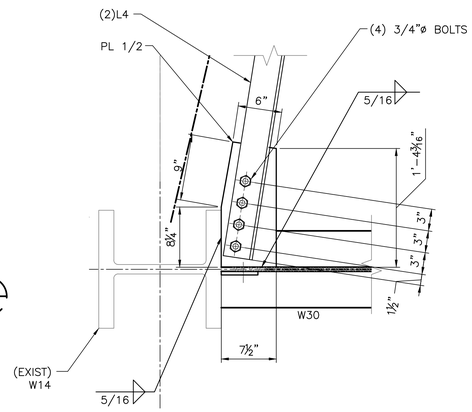

DETAIL (7)
SCALE: 1 1/2" = 1'-0"

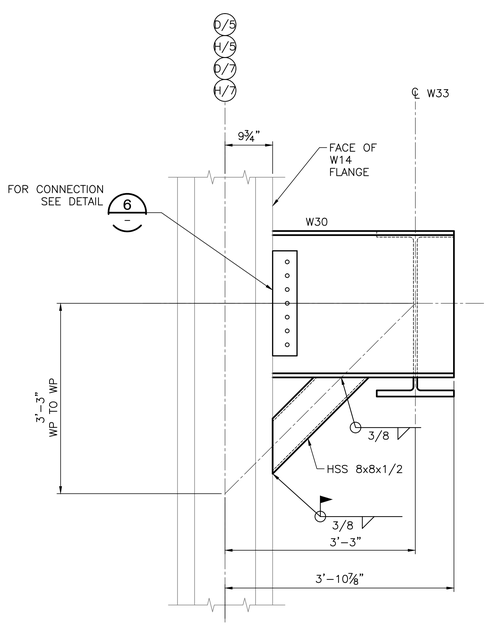

ELEVATION (A)
SCALE: 1" = 1'-0"

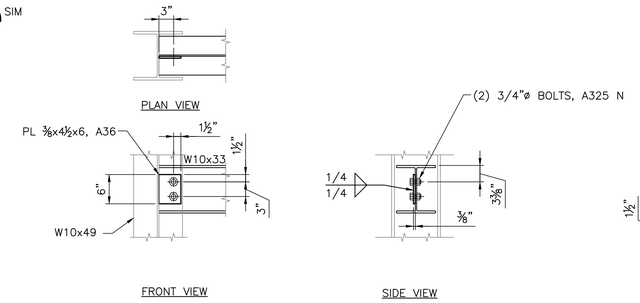

USE SAME CONNECTION FOR OPPOSITE END OF W10X33 MEMBER PLACING PLATE ON SIDE OF WEB OPPOSITE BRACING CONNECTION SHOWN IN DETAIL 2 ON COL. LINE D THE W10X33 FRAMES INTO EXISTING BEAM USING THE CONNECTOR.

W10x33 TO COLUMN WEB CONNECTION DETAIL (4)
SCALE: 1 1/2" = 1'-0"

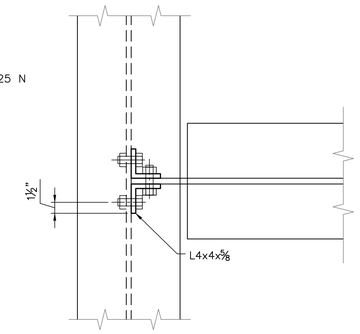

PLAN VIEW (ROTATED 90°)

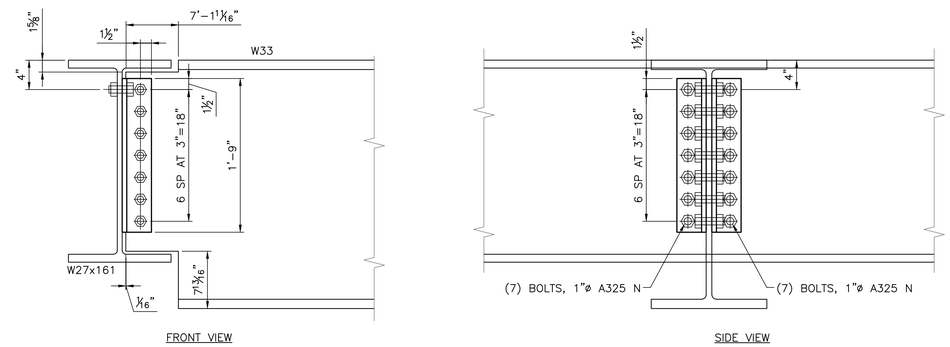

USE SAME CONNECTOR FOR TOWER F. ADJUST COPE DEPTHS TO REFLECT W33X200 GIRDER
USE CONNECTOR AT OPPOSITE END OF W33X221. ADJUST COPE DEPTH FOR W30X116.

W33x221 GIRDER CONNECTION DETAIL - TOWER E (5)
SCALE: 1 1/2" = 1'-0"

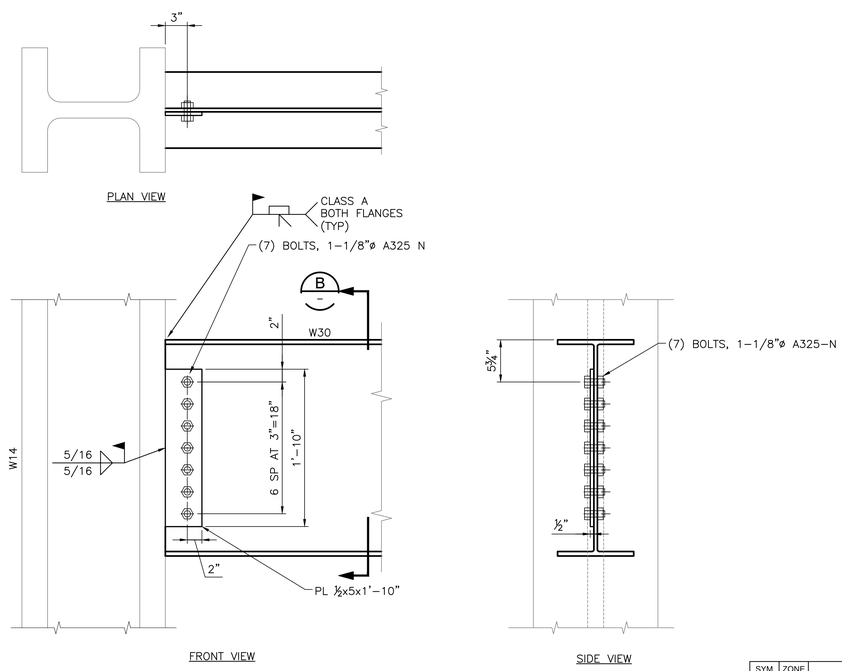

W30x116 TO COLUMN FLANGE CONNECTION DETAIL (6)
SCALE: 1 1/2" = 1'-0"

DETAIL (B)
SCALE: 1 1/2" = 1'-0"

1/2 IN = 1 FT
1 IN = 1 FT
1 1/2 IN = 1 FT

WHEN PRINTED FULL SIZE, THIS SHEET IS 34"X44"
THIS COMPUTER DRAWING WAS CREATED IN AUTOCAD AND FILED UNDER THE DRAWING NUMBER

S-501

SYM	ZONE	DESCRIPTION	DATE	APPROVAL
		REVISIONS		

RS&H IMPROVING YOUR WORLD
Reynolds, Smith and Hills, Inc.
115 Alma Blvd, Suite 101
Merritt Island, Florida 32953-4101
(321) 453-0212 (321) 453-0223 FAX
www.rsandh.com

SIGNATURES		DATE
DRAWN:	LYNN SHAFFER	08-20-2013
CHECKED:	ROBERT PRUSS	08-20-2013
SUBMITTED: ARCHENG OF RECORD	JAMES BALMER	
ST OF LICENSURE: FL LICENSE NO:		
APPROVED:	JOHN KERCSMAR	
	MIKE HARTNETT	

NATIONAL AERONAUTICS AND SPACE ADMINISTRATION
JOHN F. KENNEDY SPACE CENTER, NASA
KENNEDY SPACE CENTER, FLORIDA

LAUNCH COMPLEX 39
VEHICLE ASSEMBLY BUILDING

MODIFY VEHICLE ASSEMBLY BUILDING HIGH BAY 3 FOR SLS – HOISTS STRUCTURAL DETAILS – 1

FILE NO.	SIZE	DWG. NO.	REV
302-6058-043	E	79K39667	

PROJ. NO. PCN 99000.5 SHEET 22 OF

NOTICE -- WHEN GOVERNMENT DRAWINGS, SPECIFICATIONS, OR OTHER DATA ARE USED FOR ANY PURPOSE OTHER THAN IN CONNECTION WITH A DEFINITELY RELATED GOVERNMENT PROCUREMENT OPERATION, THE UNITED STATES GOVERNMENT THEREBY INCURS NO RESPONSIBILITY NOR ANY OBLIGATION WHATSOEVER; AND THE FACT THAT THE GOVERNMENT MAY HAVE FORMULATED, FURNISHED, OR IN ANY WAY SUPPLIED THE SAID DRAWINGS, SPECIFICATIONS, OR OTHER DATA IS NOT TO BE REGARDED BY IMPLICATION OR OTHERWISE AS IN ANY MANNER LICENSING THE HOLDER OR ANY OTHER PERSON OR CORPORATION, OR CONVEYING ANY RIGHTS OR PERMISSION TO MANUFACTURE, USE, OR SELL ANY PATENTED INVENTION THAT IN ANY WAY BE RELATED THERETO.

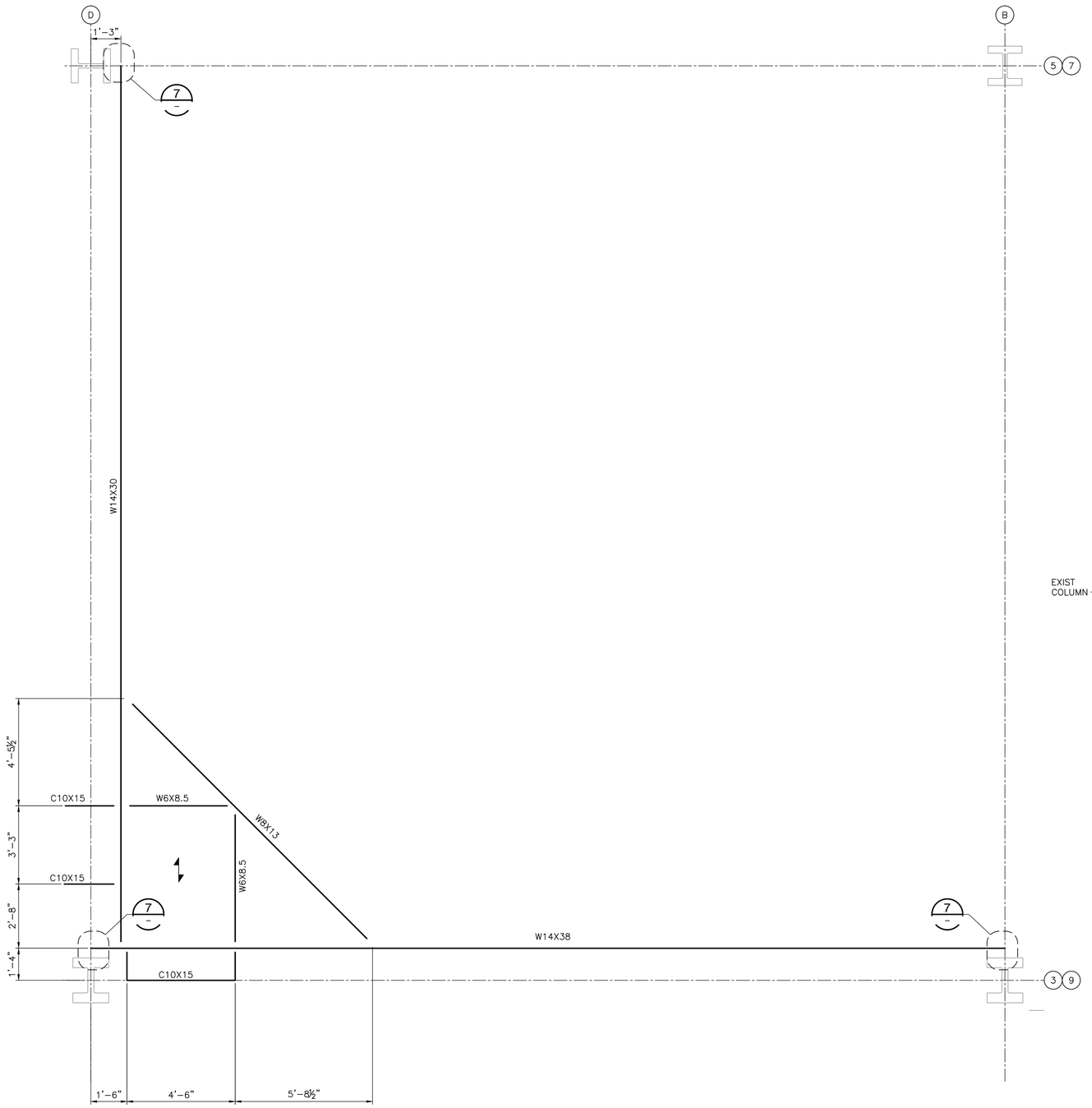

DETAIL 4 S-135
SCALE: 1/2" = 1'-0"

SPECIFIC NOTES:

A. UON FRAMING MEMBERS SHALL BE STANDARD AISC CONNECTIONS DESIGNED TO THE 13th EDITION AISC STEEL MANUAL REQUIREMENTS. THE FOLLOWING MINIMUM DESIGN LOADS SHALL BE MET:

SECTION	SHEAR (kips)
W14X38	15
W14X30	15
W8X13	6
W6X8.5	6
C10X15	6
C6x8.2	6

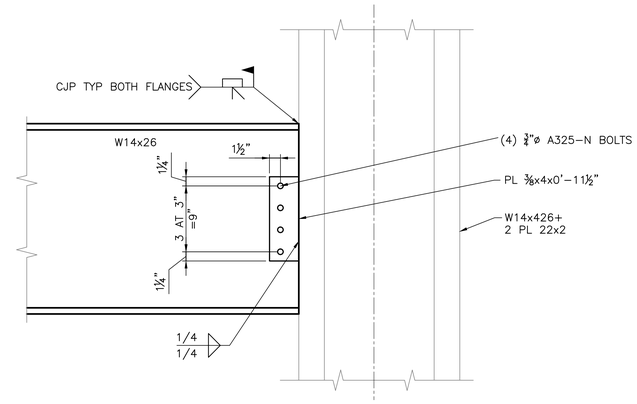

COLUMN CONNECTION DETAIL 8 S-401
SCALE: 1 1/2"=1'-0"

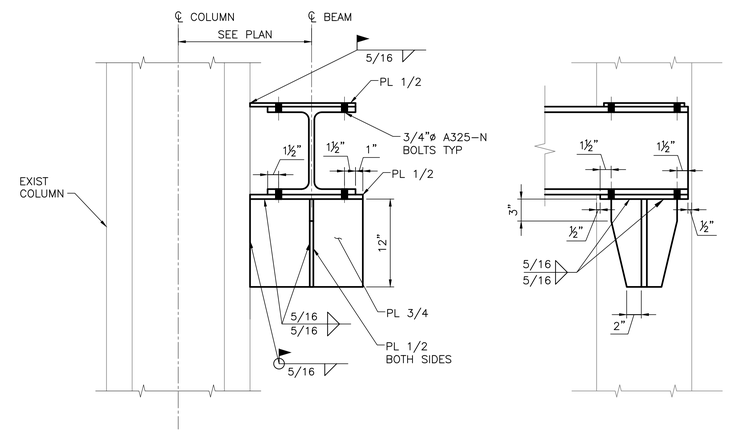

TYPICAL BEAM-COLUMN CONNECTION - DETAIL 7 – 7 S-401 7 S-402
SCALE: 1 1/2" = 1'-0"

LEGEND:

1.5BP 16/16 INVERTED METAL CELLULAR DECK SPAN DIRECTION. PROVIDE 1⅜" HOLE THRU TOP OF DECK FOR FASTENER INSTALLATION. INSTALL ½" DIA-13 (A307/A325 HDG) THRU BOLT WITH HEAVY DUTY, LOCKING HEX NUTS (FLEXLOC NUTS BY SPS TECHNOLOGIES, OAE). ONLY 2 BOLTS PER 24" WIDE CELLULAR PANEL AT EACH BEAM ARE REQUIRED. PROVIDE SNAP BLANKS TO CLOSE HOLES IN TOP OF DECK. EXTEND DECKING TO EDGE OF PERIMETER BEAM FLANGES.

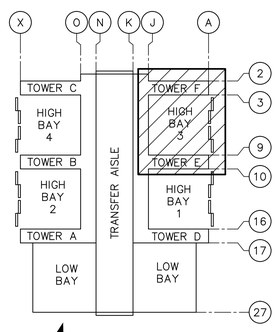

VAB KEY PLAN
SCALE: NTS

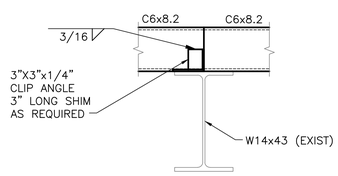

SECTION B –
SCALE: 1 1/2"=1'-0"

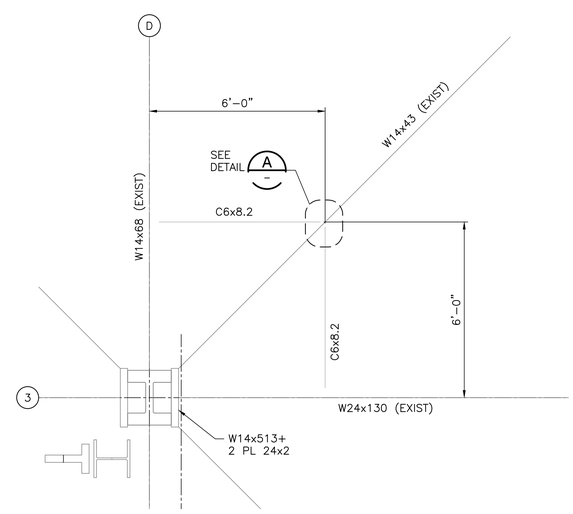

LADDER LANDING - DETAIL (TOS EL 419'-5")
SCALE: 1/2" = 1'-0"

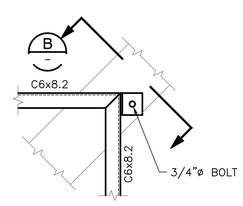

DETAIL PLAN A –
SCALE: 1 1/2"=1'-0"

1 6" 0 1 2 3 4 5
1/2 IN = 1 FT
1 9" 6" 3" 0 1
1 1/2 IN = 1 FT

WHEN PRINTED FULL SIZE, THIS SHEET IS 34"X44"
THIS COMPUTER DRAWING WAS
CREATED IN AUTOCAD AND
FILED UNDER THE DRAWING NUMBER

S-502

SYM	ZONE	DESCRIPTION	DATE	APPROVAL

REVISIONS

RS&H IMPROVING YOUR WORLD
Reynolds, Smith and Hills, Inc.
115 Alma Blvd, Suite 101
Merritt Island, Florida 32953-4101
(321) 453-0212 (321) 453-0223 FAX
www.rsandh.com

SIGNATURES		DATE
DRAWN:	JOSEPH HAUER	08-20-2013
CHECKED:	ROBERT PRUSS	08-20-2013
SUBMITTED: ARCHENG OF RECORD	JAMES BALMER	
ST OF LICENSURE: FL LICENSE NO:		
APPROVED:	JOHN KERCSMAR	
	MIKE HARTNETT	

NATIONAL AERONAUTICS AND SPACE ADMINISTRATION
JOHN F. KENNEDY SPACE CENTER, NASA
KENNEDY SPACE CENTER, FLORIDA

LAUNCH COMPLEX 39
VEHICLE ASSEMBLY BUILDING

MODIFY VEHICLE ASSEMBLY BUILDING HIGH BAY 3 FOR SLS – HOISTS STRUCTURAL DETAILS – 2

FILE NO.	SIZE	DWG. NO.	REV
302-6058-043	E	79K39667	

PROJ. NO. PCN 99000.5 SHEET 23 OF

NOTICE -- WHEN GOVERNMENT DRAWINGS, SPECIFICATIONS, OR OTHER DATA ARE USED FOR ANY PURPOSE OTHER THAN IN CONNECTION WITH A DEFINITELY RELATED GOVERNMENT PROCUREMENT OPERATION, THE UNITED STATES GOVERNMENT THEREBY INCURS NO RESPONSIBILITY NOR ANY OBLIGATION WHATSOEVER; AND THE FACT THAT THE GOVERNMENT MAY HAVE FORMULATED, FURNISHED, OR IN ANY WAY SUPPLIED THE SAID DRAWINGS, SPECIFICATIONS, OR OTHER DATA IS NOT TO BE REGARDED BY IMPLICATION OR OTHERWISE IN ANY MANNER CONSTRUED TO BE LICENSE OR ANY OTHER GRANTING OF ANY OPERATION, OR CONVEYING ANY RIGHTS OR PERMISSION TO MANUFACTURE, USE, OR SELL ANY PATENTED INVENTION THAT IN ANY WAY BE RELATED THERETO.

SPECIFIC NOTES:

A. PROVIDE ANCHOR PLATE TO MATCH PROVIDED FALL PROTECTION POST.
DBI SALA PART NUMBER: 8510816
MILLER PART NUMBER: DH-AP-5/
UCL ADVANCED SAFETY SYSTEMS PART NUMBER: 17423

B. CONTRACTOR SHALL PROVIDE (4) PORTABLE FALL PROTECTION POSTS
DBI SALA PART NUMBER: 8516691
MILLER PART NUMBER: DH-AP-1/
UCL ADVANCED SAFETY SYSTEMS PART NUMBER: 16691

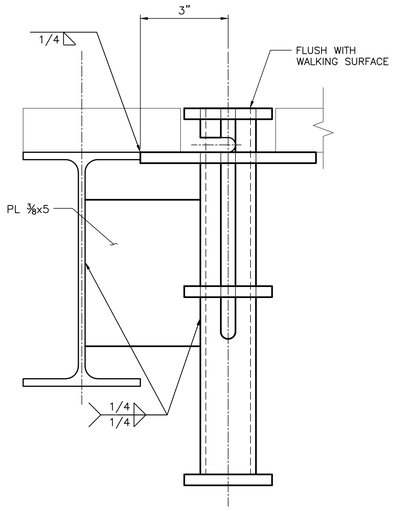

(PIN NOT SHOWN FOR CLARITY)

SECTION B
SCALE: 6"=1'-0"

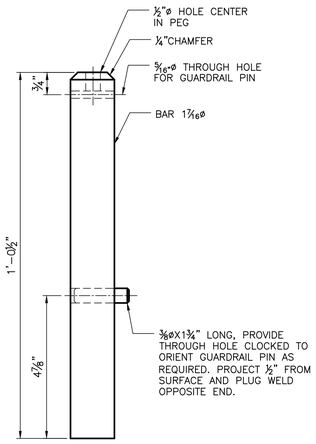

DETAIL 1
SCALE: 6"=1'-0"

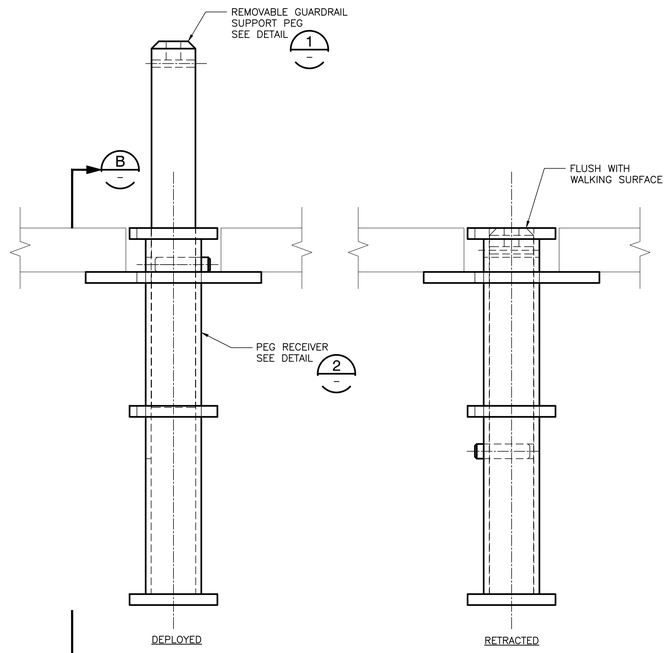

REMOVABLE GUARDRAIL BASE DETAIL
SCALE: 6"=1'-0"

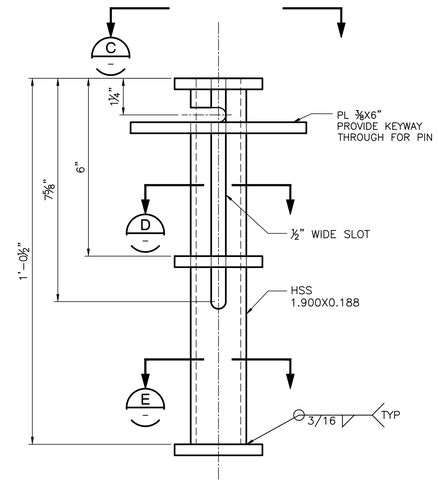

DETAIL 2
SCALE: 6"=1'-0"

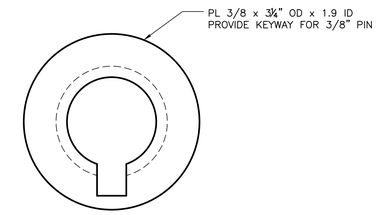

VIEW C
SCALE: 1'-0"=1'-0"

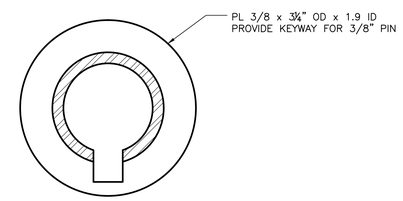

SECTION D
SCALE: 1'-0"=1'-0"

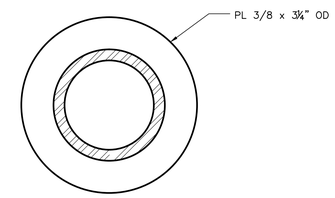

SECTION E
SCALE: 1'-0"=1'-0"

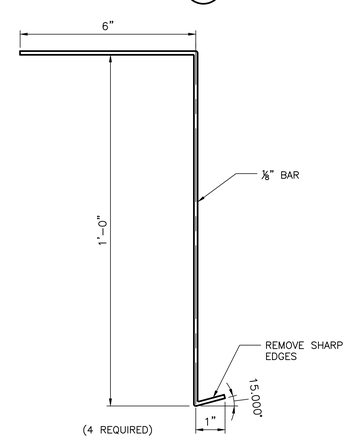

(4 REQUIRED)

PEG EXTRACTION DEVICE DETAIL
SCALE: 6"=1'-0"

1/2 IN = 1 FT

6 IN = 1 FT

3 IN = 1 FT

WHEN PRINTED FULL SIZE, THIS SHEET IS 34"X44"
THIS COMPUTER DRAWING WAS CREATED IN AUTOCAD AND FILED UNDER THE DRAWING NUMBER

S-503

SYM	ZONE	DESCRIPTION	DATE	APPROVAL

REVISIONS

RS&H IMPROVING YOUR WORLD
Reynolds, Smith and Hills, Inc.
115 Alma Blvd, Suite 101
Merritt Island, Florida 32953-4101
(321) 453-0212 (321) 453-0223 FAX
www.rsandh.com

SIGNATURES		DATE
DRAWN:	JOSEPH HAUER	08-20-2013
CHECKED:	MIKE KENDRICK	08-20-2013
SUBMITTED: ARCHENG OF RECORD:	JAMES BALMER	
ST OF LICENSURE: FL LICENSE NO:		
APPROVED:	JOHN KERCSMAR	
	MIKE HARTNETT	

NATIONAL AERONAUTICS AND SPACE ADMINISTRATION
JOHN F. KENNEDY SPACE CENTER, NASA
KENNEDY SPACE CENTER, FLORIDA

LAUNCH COMPLEX 39
VEHICLE ASSEMBLY BUILDING

MODIFY VEHICLE ASSEMBLY BUILDING HIGH BAY 3 FOR SLS – HOISTS REMOVABLE GUARDRAIL BASE DETAIL

FILE NO.	SIZE	DWG. NO.	REV
302-6058-043	E	79K39667	

PROJ. NO. PCN 99000.5 SHEET 24 OF

NOTICE -- WHEN GOVERNMENT DRAWINGS, SPECIFICATIONS, OR OTHER DATA ARE USED FOR ANY PURPOSE OTHER THAN IN CONNECTION WITH A DEFINITELY RELATED GOVERNMENT PROCUREMENT OPERATION, THE UNITED STATES GOVERNMENT THEREBY INCURS NO RESPONSIBILITY NOR ANY OBLIGATION WHATSOEVER; AND THE FACT THAT THE GOVERNMENT MAY HAVE FORMULATED, FURNISHED, OR IN ANY WAY SUPPLIED THE SAID DRAWINGS, SPECIFICATIONS, OR OTHER DATA IS NOT TO BE REGARDED BY IMPLICATION OR OTHERWISE IN ANY MANNER CONSTRUED AS LICENSING THE HOLDER OR ANY OTHER PERSON OR CORPORATION; OR CONVEYING ANY RIGHTS OR PERMISSION TO MANUFACTURE, USE, OR SELL ANY PATENTED INVENTION THAT IN ANY WAY BE RELATED THERETO.

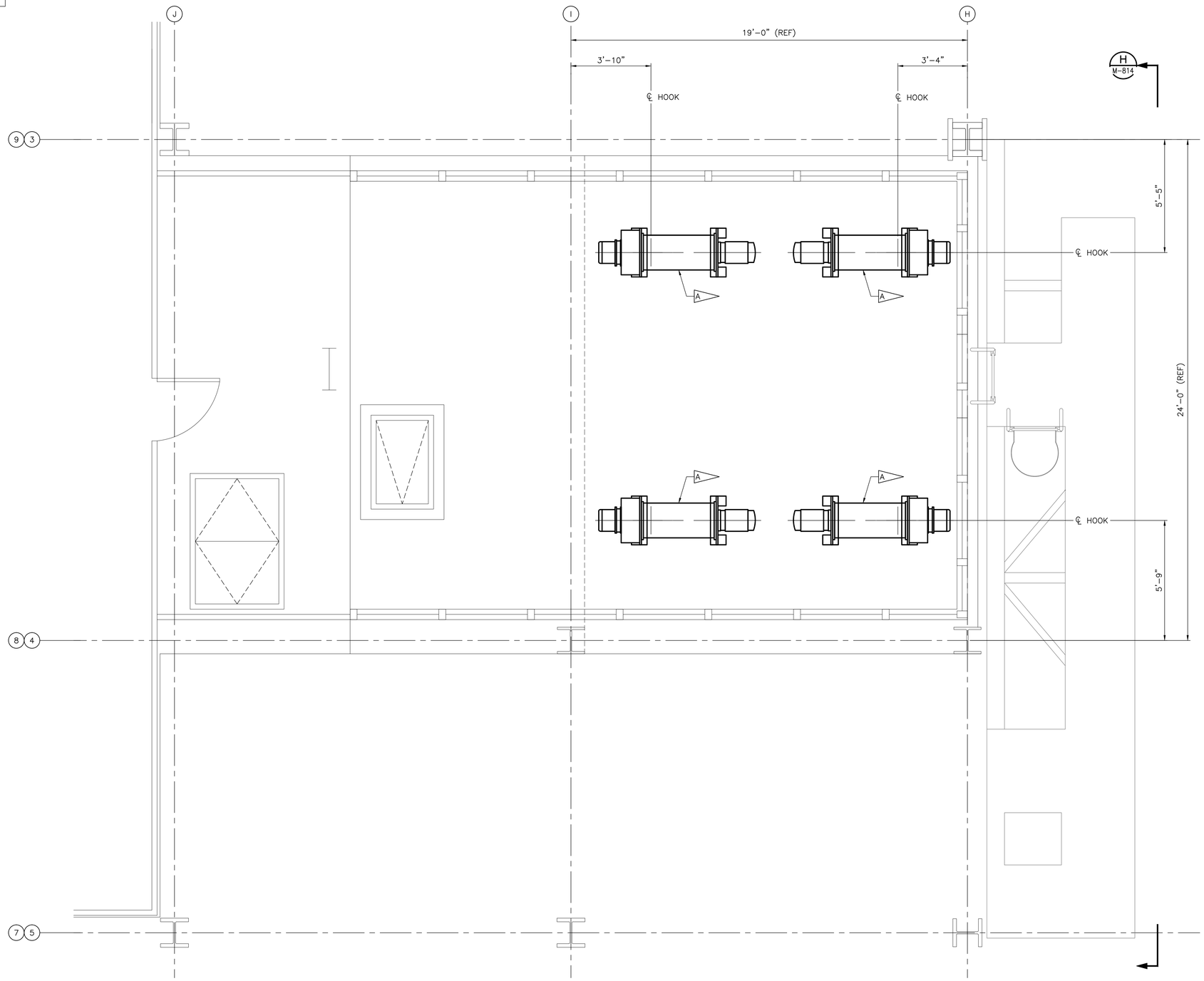

NOTE: TOWER F SHOWN. TOWER E SIMILAR EXCEPT OPPOSITE HAND.

FLOOR PLAN AT LEVEL 36 (EL 445'-1")
SCALE: 1/2"=1'-0"

SPECIFIC NOTES:

A. ELEVATOR PLATFORM HOISTS PER 79K39668 (MODIFY VEHICLE ASSEMBLY BUILDING HIGH BAY 3 FOR SLS – HOISTS), SECTION 41 22 23.19.

B. THE CONTRACTOR SHALL PROVIDE SECONDARY FRAMING TO SUPPORT REACTION LOADS FROM HOIST EQUIPMENT AS WELL AS SUPPORTING OPENINGS IN THE FLOOR REQUIRED TO SUPPORT HIS LAYOUT. CONTRACTOR FRAMING PLANS SHALL BE SIGNED AND SEALED BY A FLORIDA LICENSED STRUCTURAL ENGINEER. THE CONTRACTOR SHALL REFER TO DRAWING S-3-074 FOR AS-BUILT INFORMATION FOR EXISTING FRAMING ON THE LEVEL.

C. ELEVATOR PLATFORM MAXIMUM TRAVEL HEIGHT IS LEVEL 34.

D. HOIST ARRANGEMENT AND INSTALLATION SHALL ACCOMODATE TRUE VERTICAL PLATFORM HOIST MOVEMENT. THE HOOK CENTERLINE IS HIGH HOOK POSITION CENTERLINE.

E. ELEVATOR PLATFORM HOISTS TO BE POSITIONED SUCH TO ALLOW ADEQUATE ROOM AROUND EACH HOIST FOR MAINTENANCE.

F. CONDUITS USED IN THE INSTALLATION OF THE HOIST MOTORS AND THEIR REQUIRED CONTROL ACCESSORIES SHALL BE RUN IN ACCORDANCE WITH SPECIFICATION 26 05 00.00 40. CONDUITS SHALL NOT BE ROUTED ALONG WALKING SURFACES OR IN A MANNER THAT RESTRICTS ACCESS OR EGRESS FROM THE SPACE IN WHICH IT IS INSTALLED.

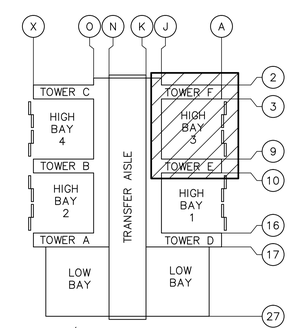

VAB KEY PLAN
SCALE: NTS

1 6" 0 1 2 3 4 5
1/2 IN = 1 FT

WHEN PRINTED FULL SIZE, THIS SHEET IS 34"X44"
THIS COMPUTER DRAWING WAS
CREATED IN AUTOCAD AND
FILED UNDER THE DRAWING NUMBER

M-810

SYM	ZONE	DESCRIPTION	DATE	APPROVAL
		REVISIONS		

RS&H IMPROVING YOUR WORLD
Reynolds, Smith and Hills, Inc.
115 Alma Blvd, Suite 101
Merritt Island, Florida 32953-4101
(321) 453-0212 (321) 453-0223 FAX
www.rsandh.com

SIGNATURES		DATE
DRAWN:	JOSEPH HAUER	08-20-2013
CHECKED:	JIM STAPP	08-20-2013
SUBMITTED: ARCH/ENG OF RECORD	ROBERT PRUSS	
ST OF LICENSURE: FL LICENSE NO:		
APPROVED:	JOHN KERCSMAR	
	MIKE HARTNETT	

NATIONAL AERONAUTICS AND SPACE ADMINISTRATION
JOHN F. KENNEDY SPACE CENTER, NASA
KENNEDY SPACE CENTER, FLORIDA

LAUNCH COMPLEX 39
VEHICLE ASSEMBLY BUILDING

MODIFY VEHICLE ASSEMBLY BUILDING HIGH BAY 3 FOR SLS – HOISTS ELEVATOR LANDINGS HOISTS AT FLOOR LEVEL 36 PLAN

FILE NO.	SIZE	DWG. NO.	REV
302-6058-043	E	79K39667	

PROJ. NO. PCN 99000.5 SHEET 25 OF

NOTICE -- WHEN GOVERNMENT DRAWINGS, SPECIFICATIONS, OR OTHER DATA ARE USED FOR ANY PURPOSE OTHER THAN IN CONNECTION WITH A DEFINITELY RELATED GOVERNMENT PROCUREMENT OPERATION, THE UNITED STATES GOVERNMENT THEREBY INCURS NO RESPONSIBILITY NOR ANY OBLIGATION WHATSOEVER; AND THE FACT THAT THE GOVERNMENT MAY HAVE FORMULATED, FURNISHED, OR IN ANY WAY SUPPLIED THE SAID DRAWINGS, SPECIFICATIONS, OR OTHER DATA IS NOT TO BE REGARDED BY IMPLICATION OR OTHERWISE AS IN ANY MANNER LICENSING THE HOLDER OR ANY OTHER PERSON OR CORPORATION, OR CONVEYING ANY RIGHTS OR PERMISSION TO MANUFACTURE, USE, OR SELL ANY PATENTED INVENTION THAT IN ANY WAY BE RELATED THERETO.

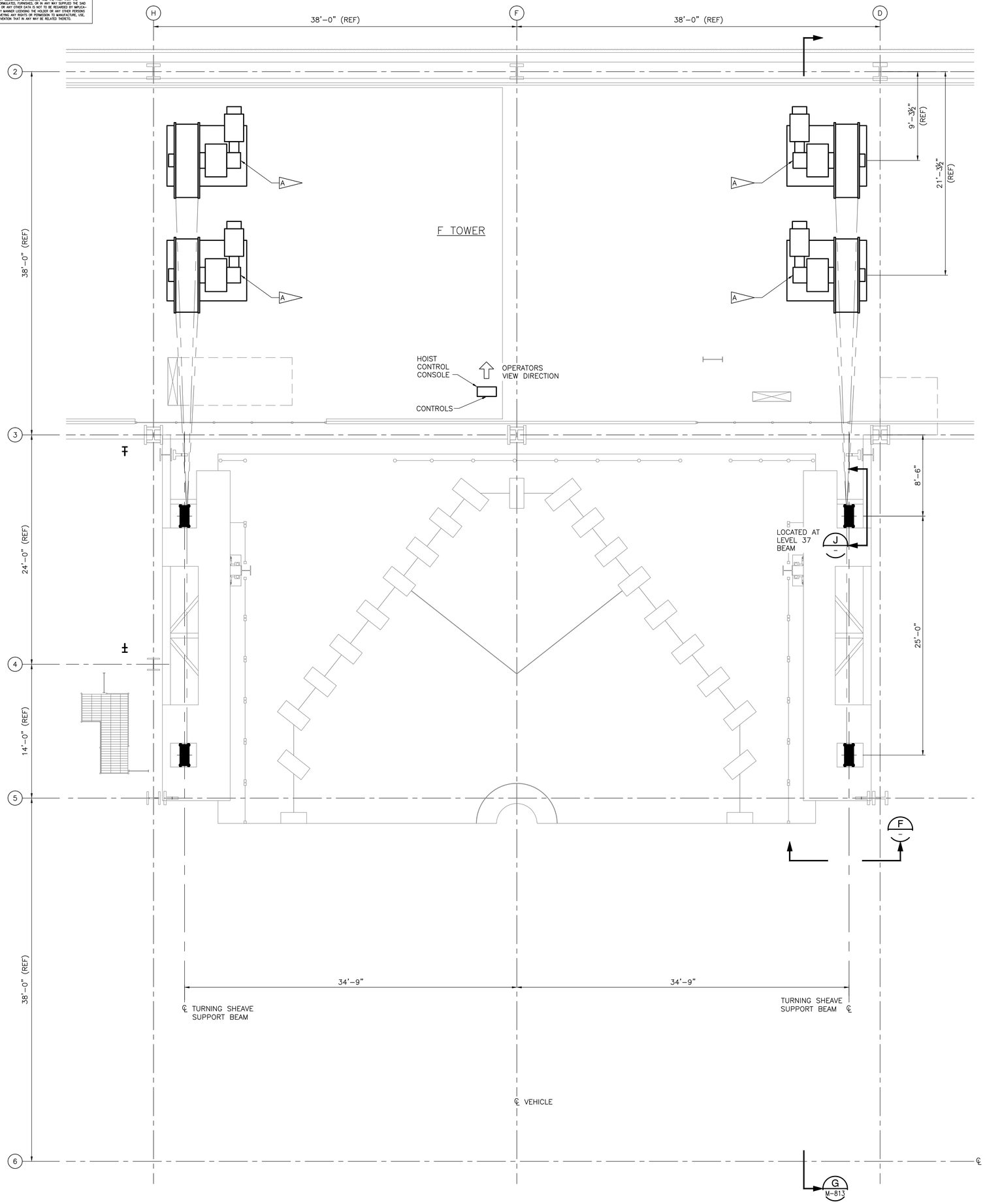

FLOOR PLAN AT LEVEL 32 (EL 394'-5")
SCALE: 1/4" = 1'-0"

SPECIFIC NOTES:

A. EXTENSIBLE PLATFORM HOISTS PER 79K39668 (MODIFY VEHICLE ASSEMBLY BUILDING HIGH BAY 3 FOR SLS – HOISTS, SECTION 41 22 23.19.

B. THE CONTRACTOR SHALL PROVIDE SECONDARY FRAMING TO SUPPORT REACTION LOADS FROM HOIST EQUIPMENT AS WELL AS SUPPORTING OPENINGS IN THE FLOOR REQUIRED TO SUPPORT HIS LAYOUT. CONTRACTOR FRAMING PLANS SHALL BE SIGNED AND SEALED BY A FLORIDA LICENSED STRUCTURAL ENGINEER. THE CONTRACTOR SHALL REFER TO DRAWING S-3-074 FOR AS-BUILT INFORMATION FOR EXISTING FRAMING ON THE LEVEL.

C. EXTENSIBLE PLATFORM MAXIMUM TRAVEL HEIGHT IS LEVEL 34.

D. CONTRACTOR TO INSTALL HOISTS AS REQUIRED TO MAINTAIN HOOK CENTERLINE AS INDICATED.

E. EXTENSIBLE PLATFORM HOISTS TO BE POSITIONED SUCH TO ALLOW ADEQUATE ROOM AROUND EACH HOIST FOR MAINTENANCE.

F. HOIST HOOK AT STOWED POSITION WITH 85 FEET OF DOWNWARD TRAVEL REQUIRED FROM THIS ELEVATION.

G. CONDUITS USED IN THE INSTALLATION OF THE HOIST MOTORS AND THEIR REQUIRED CONTROL ACCESSORIES SHALL BE RUN IN ACCORDANCE WITH SPECIFICATION 26 05 00.00 40. CONDUITS SHALL NOT BE ROUTED ALONG WALKING SURFACES OR IN A MANNER THAT RESTRICTS ACCESS OR EGRESS FROM THE SPACE IN WHICH IT IS INSTALLED. COORDINATE WITH CONTRACTING OFFICER WHEN ROUTING.

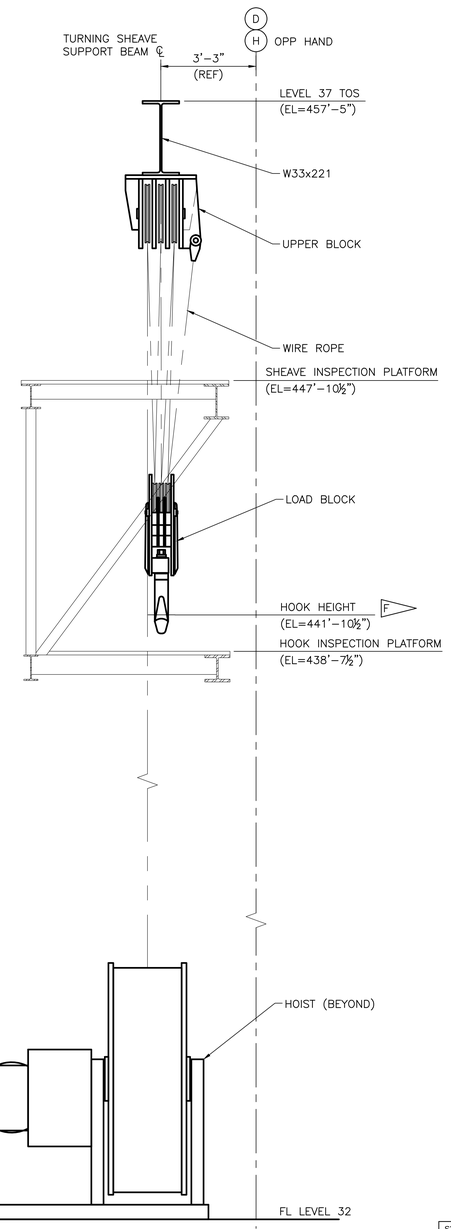

ELEVATION VIEW (F)
SCALE: NTS

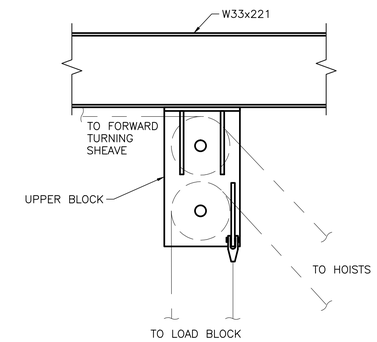

ELEVATION VIEW (J)
SCALE: NTS

2 1 0 2 4 6 8 10
1/4 IN = 1 FT

WHEN PRINTED FULL SIZE, THIS SHEET IS 34"X44"
THIS COMPUTER DRAWING WAS
CREATED IN AUTOCAD AND
FILED UNDER THE DRAWING NUMBER

M-811

SYM	ZONE	DESCRIPTION	DATE	APPROVAL
		REVISIONS		

RS&H IMPROVING YOUR WORLD
Reynolds, Smith and Hills, Inc.
115 Alma Blvd, Suite 101
Merritt Island, Florida 32953-4101
(321) 453-0212 (321) 453-0223 FAX
www.rsandh.com

SIGNATURES	DATE
DRAWN: JOSEPH HAUER	08-20-2013
CHECKED: JIM STAPP	08-20-2013
SUBMITTED: ARCHENG OF RECORD: ROBERT PRUSS	
ST OF LICENSURE: FL LICENSE NO:	
APPROVED: JOHN KERCSMAR	
MIKE HARTNETT	

NATIONAL AERONAUTICS AND SPACE ADMINISTRATION
JOHN F. KENNEDY SPACE CENTER, NASA
KENNEDY SPACE CENTER, FLORIDA

LAUNCH COMPLEX 39
VEHICLE ASSEMBLY BUILDING

MODIFY VEHICLE ASSEMBLY BUILDING HIGH BAY 3 FOR SLS – HOISTS EXTENSIBLE PLATFORMS HOISTS AT FLOOR LEVEL 32 PLAN

FILE NO.	SIZE	DWG. NO.	REV
302-6058-043	E	79K39667	

PROJ. NO. PCN 99000.5 SHEET 26 OF

NOTICE -- WHEN GOVERNMENT DRAWINGS, SPECIFICATIONS, OR OTHER DATA ARE USED FOR ANY PURPOSE OTHER THAN IN CONNECTION WITH A DEFINITELY RELATED GOVERNMENT PROCUREMENT OPERATION, THE UNITED STATES GOVERNMENT THEREBY INCURS NO RESPONSIBILITY NOR ANY OBLIGATION WHATSOEVER; AND THE FACT THAT THE GOVERNMENT MAY HAVE FORMULATED, FURNISHED, OR IN ANY WAY SUPPLIED THE SAID DRAWINGS, SPECIFICATIONS, OR OTHER DATA IS NOT TO BE REGARDED BY IMPLICATION OR OTHERWISE AS IN ANY MANNER LICENSING THE HOLDER OR ANY OTHER PERSON OR CORPORATION, OR CONVEYING ANY RIGHTS OR PERMISSION TO MANUFACTURE, USE, OR SELL ANY PATENTED INVENTION THAT IN ANY MAY BE RELATED THERETO.

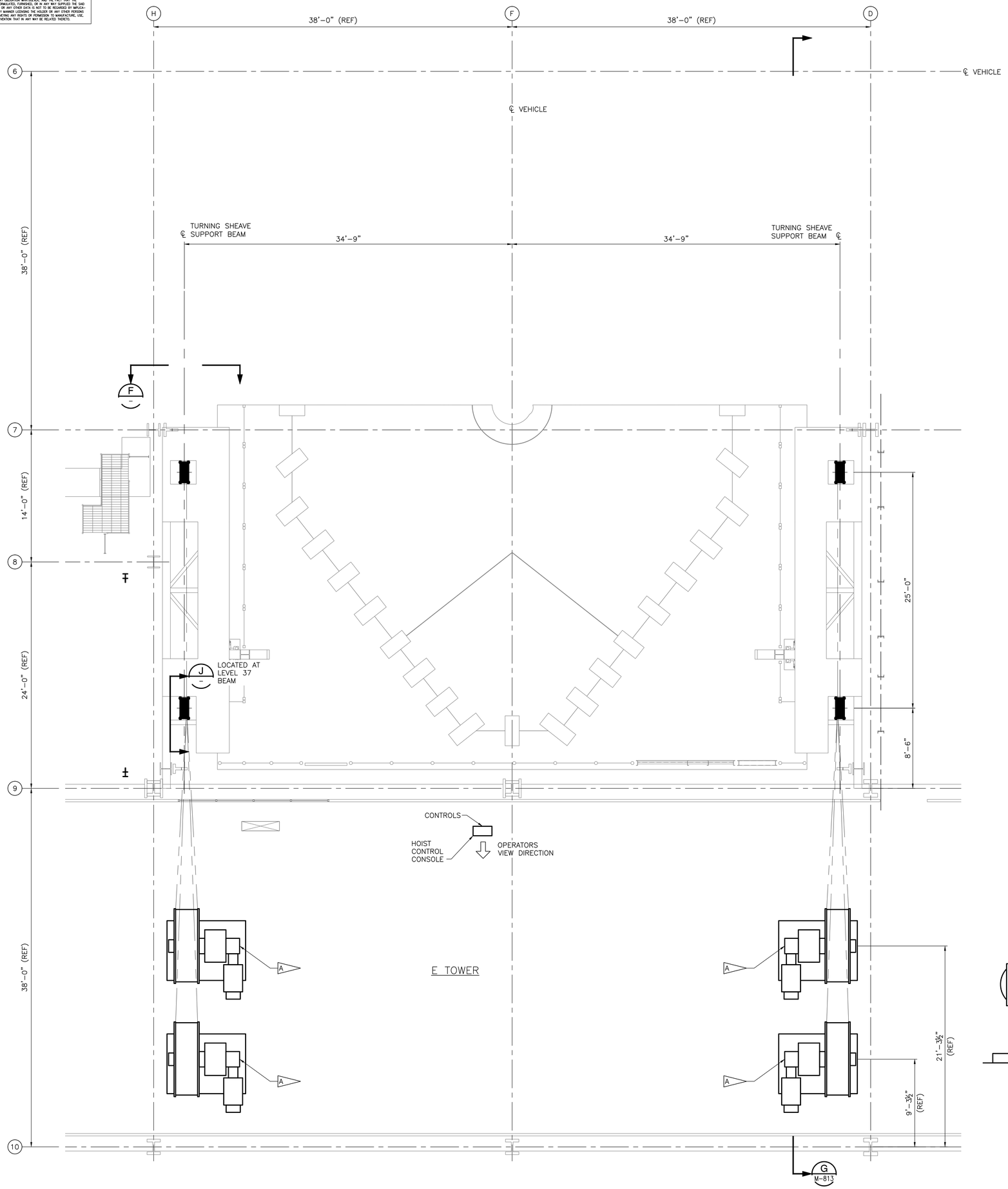

FLOOR PLAN AT LEVEL 34 (EL 419'-9")
SCALE: 1/4" = 1'-0"

SPECIFIC NOTES:

A. EXTENSIBLE PLATFORM HOISTS PER 79K39668 (MODIFY VEHICLE ASSEMBLY BUILDING HIGH BAY 3 FOR SLS – HOISTS), SECTION 41 22 23.19.

B. THE CONTRACTOR SHALL PROVIDE SECONDARY FRAMING TO SUPPORT REACTION LOADS FROM HOIST EQUIPMENT AS WELL AS SUPPORTING OPENINGS IN THE FLOOR REQUIRED TO SUPPORT HIS LAYOUT. CONTRACTOR FRAMING PLANS SHALL BE SIGNED AND SEALED BY A FLORIDA LICENSED STRUCTURAL ENGINEER. THE CONTRACTOR SHALL REFER TO DRAWING S-3-074 FOR AS-BUILT INFORMATION FOR EXISTING FRAMING ON THE LEVEL.

C. EXTENSIBLE PLATFORM MAXIMUM TRAVEL HEIGHT IS LEVEL 34.

D. CONTRACTOR TO INSTALL HOISTS AS REQUIRED TO MAINTAIN HOOK CENTERLINE AS INDICATED.

E. EXTENSIBLE PLATFORM HOISTS TO BE POSITIONED SUCH TO ALLOW ADEQUATE ROOM AROUND EACH HOIST FOR MAINTENANCE.

F. HOIST HOOK AT STOWED POSITION WITH 85 FEET OF TRAVEL FROM THIS ELEVATION.

G. CONDUITS USED IN THE INSTALLATION OF THE HOIST MOTORS AND THEIR REQUIRED CONTROL ACCESSORIES SHALL BE RUN IN ACCORDANCE WITH SPECIFICATION 26 05 00.00 40. CONDUITS SHALL NOT BE ROUTED ALONG WALKING SURFACES OR IN A MANNER THAT RESTRICTS ACCESS OR EGRESS FROM THE SPACE IN WHICH IT IS INSTALLED. COORDINATE WITH CONTRACTING OFFICER WHEN ROUTING.

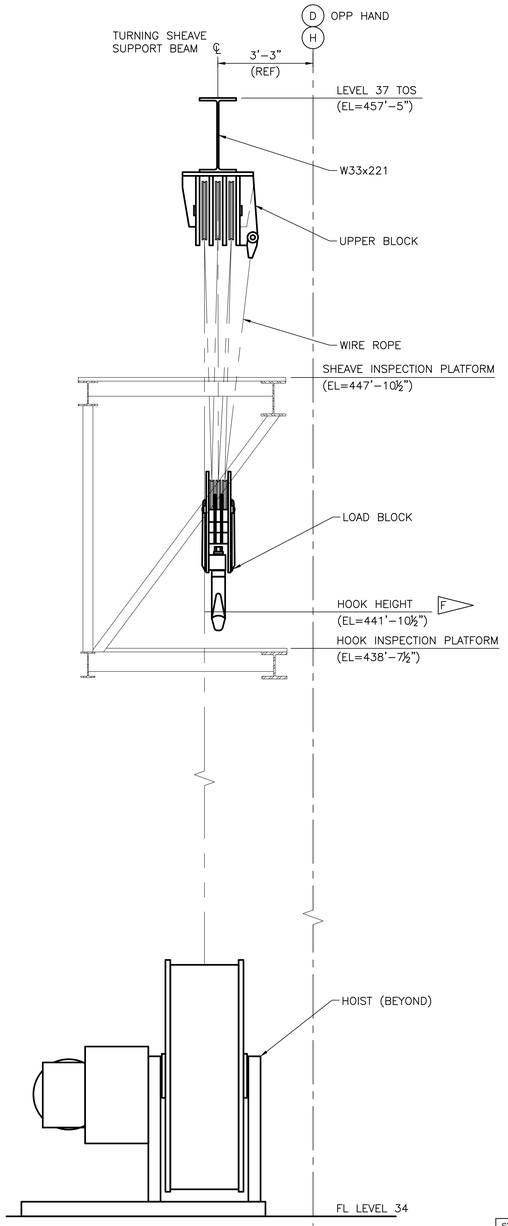

ELEVATION VIEW (F)
SCALE: NTS

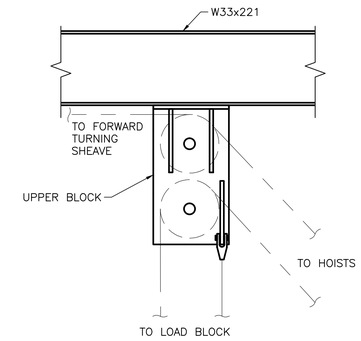

ELEVATION VIEW (J)
SCALE: NTS

2 1 0 2 4 6 8 10
1/4 IN = 1 FT

WHEN PRINTED FULL SIZE, THIS SHEET IS 34"X44"
THIS COMPUTER DRAWING WAS
CREATED IN AUTOCAD AND
FILED UNDER THE DRAWING NUMBER

M-812

SYM	ZONE	DESCRIPTION	DATE	APPROVAL
		REVISIONS		

RS&H IMPROVING YOUR WORLD
Reynolds, Smith and Hills, Inc.
115 Alma Blvd, Suite 101
Merritt Island, Florida 32953-4101
(321) 453-0212 (321) 453-0223 FAX
www.rsandh.com

SIGNATURES		DATE
DRAWN:	JOSEPH HAUER	08-20-2013
CHECKED:	JIM STAPP	08-20-2013
SUBMITTED: ARCHENG OF RECORD	ROBERT PRUSS	
ST OF LICENSURE: FL		
LICENSE NO:		
APPROVED:	JOHN KERCSMAR	
	MIKE HARTNETT	

NATIONAL AERONAUTICS AND SPACE ADMINISTRATION
JOHN F. KENNEDY SPACE CENTER, NASA
KENNEDY SPACE CENTER, FLORIDA

LAUNCH COMPLEX 39
VEHICLE ASSEMBLY BUILDING

MODIFY VEHICLE ASSEMBLY BUILDING HIGH BAY 3 FOR SLS – HOISTS EXTENSIBLE PLATFORMS HOISTS AT FLOOR LEVEL 34 PLAN

FILE NO.	SIZE	DWG. NO.	REV
302-6058-043	E	79K39667	

PROJ. NO. PCN 99000.5 SHEET 27 OF

NOTICE -- WHEN GOVERNMENT DRAWINGS, SPECIFICATIONS, OR OTHER DATA ARE USED FOR ANY PURPOSE OTHER THAN IN CONNECTION WITH A DEFINITELY RELATED GOVERNMENT PROCUREMENT OPERATION, THE UNITED STATES GOVERNMENT THEREBY INCURS NO RESPONSIBILITY NOR ANY OBLIGATION WHATSOEVER; AND THE FACT THAT THE GOVERNMENT MAY HAVE FORMULATED, FURNISHED, OR IN ANY WAY SUPPLIED THE SAID DRAWINGS, SPECIFICATIONS, OR OTHER DATA IS NOT TO BE REGARDED BY IMPLICATION OR OTHERWISE IN ANY MANNER CONSTRUED TO LICENSE OR IN ANY OTHER PERSON OR CORPORATION, OR CONVEYING ANY RIGHTS OR PERMISSION TO MANUFACTURE, USE, OR SELL ANY PATENTED INVENTION THAT IN ANY MAY BE RELATED THERETO.

SPECIFIC NOTES:

A. PLATFORM HOISTS.

B. EXTENSIBLE PLATFORM MAXIMUM TRAVEL HEIGHT IS LEVEL 34.

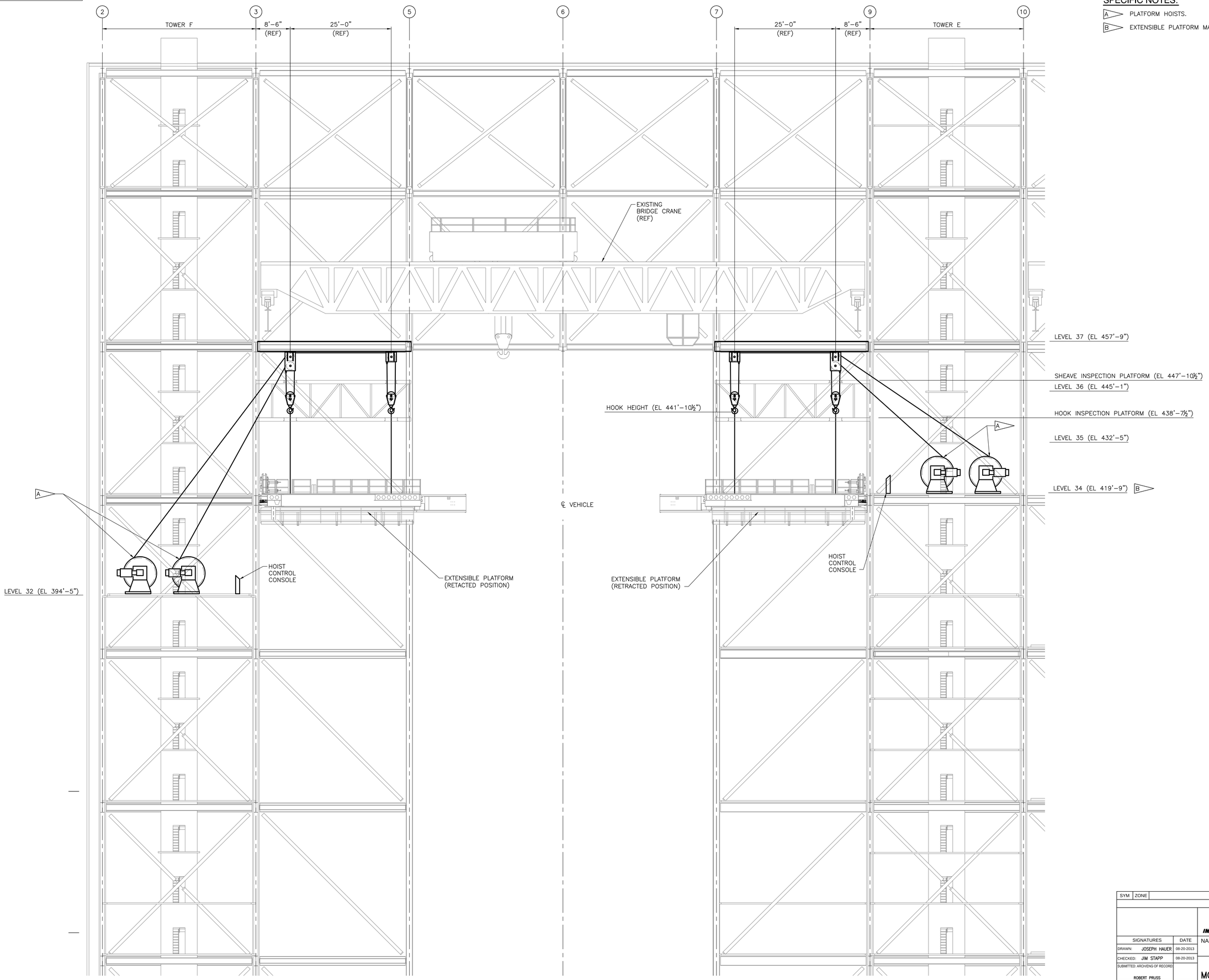

SECTION G G
SCALE: 1/8"=1'–0" M–811 M–812

4 2 0 4 8 12 16 20
1/8 IN = 1 FT

WHEN PRINTED FULL SIZE, THIS SHEET IS 34"X44"
THIS COMPUTER DRAWING WAS
CREATED IN AUTOCAD AND
FILED UNDER THE DRAWING NUMBER

M–813

SYM	ZONE	DESCRIPTION	DATE	APPROVAL
		REVISIONS		

RS&H IMPROVING YOUR WORLD
Reynolds, Smith and Hills, Inc.
115 Alma Blvd, Suite 101
Merritt Island, Florida 32953-4101
(321) 453-0212 (321) 453-0223 FAX
www.rsandh.com

SIGNATURES		DATE
DRAWN:	JOSEPH HAUER	08-20-2013
CHECKED:	JIM STAPP	08-20-2013
SUBMITTED: ARCHENG OF RECORD:	ROBERT PRUSS	
ST OF LICENSURE: FL		
LICENSE NO:		
APPROVED:	JOHN KERCSMAR	
	MIKE HARTNETT	

NATIONAL AERONAUTICS AND SPACE ADMINISTRATION
JOHN F. KENNEDY SPACE CENTER, NASA
KENNEDY SPACE CENTER, FLORIDA

LAUNCH COMPLEX 39
VEHICLE ASSEMBLY BUILDING

MODIFY VEHICLE ASSEMBLY BUILDING HIGH BAY 3 FOR SLS – HOISTS EXTENSIBLE PLATFORMS HOISTS ELEVATION

FILE NO.	SIZE	DWG. NO.	REV
302–6058–043	E	79K39667	

PROJ. NO. PCN 99000.5 SHEET 28 OF

NOTICE -- WHEN GOVERNMENT DRAWINGS, SPECIFICATIONS, OR OTHER DATA ARE USED FOR ANY PURPOSE OTHER THAN IN CONNECTION WITH A DEFINITELY RELATED GOVERNMENT PROCUREMENT OPERATION, THE UNITED STATES GOVERNMENT THEREBY INCURS NO RESPONSIBILITY NOR ANY OBLIGATION WHATSOEVER; AND THE FACT THAT THE GOVERNMENT MAY HAVE FORMULATED, FURNISHED, OR IN ANY WAY SUPPLIED THE SAID DRAWINGS, SPECIFICATIONS, OR OTHER DATA IS NOT TO BE REGARDED BY IMPLICATION OR OTHERWISE IN ANY MANNER CONSTRUED, AS LICENSING THE HOLDER OR ANY OTHER PERSON OR CORPORATION, OR CONVEYING ANY RIGHTS OR PERMISSION TO MANUFACTURE, USE, OR SELL ANY PATENTED INVENTION THAT IN ANY WAY BE RELATED THERETO.

SPECIFIC NOTES:

A ELEVATOR LANDING HOISTS.

B ELEVATOR LANDING MAXIMUM TRAVEL HEIGHT IS LEVEL 34.

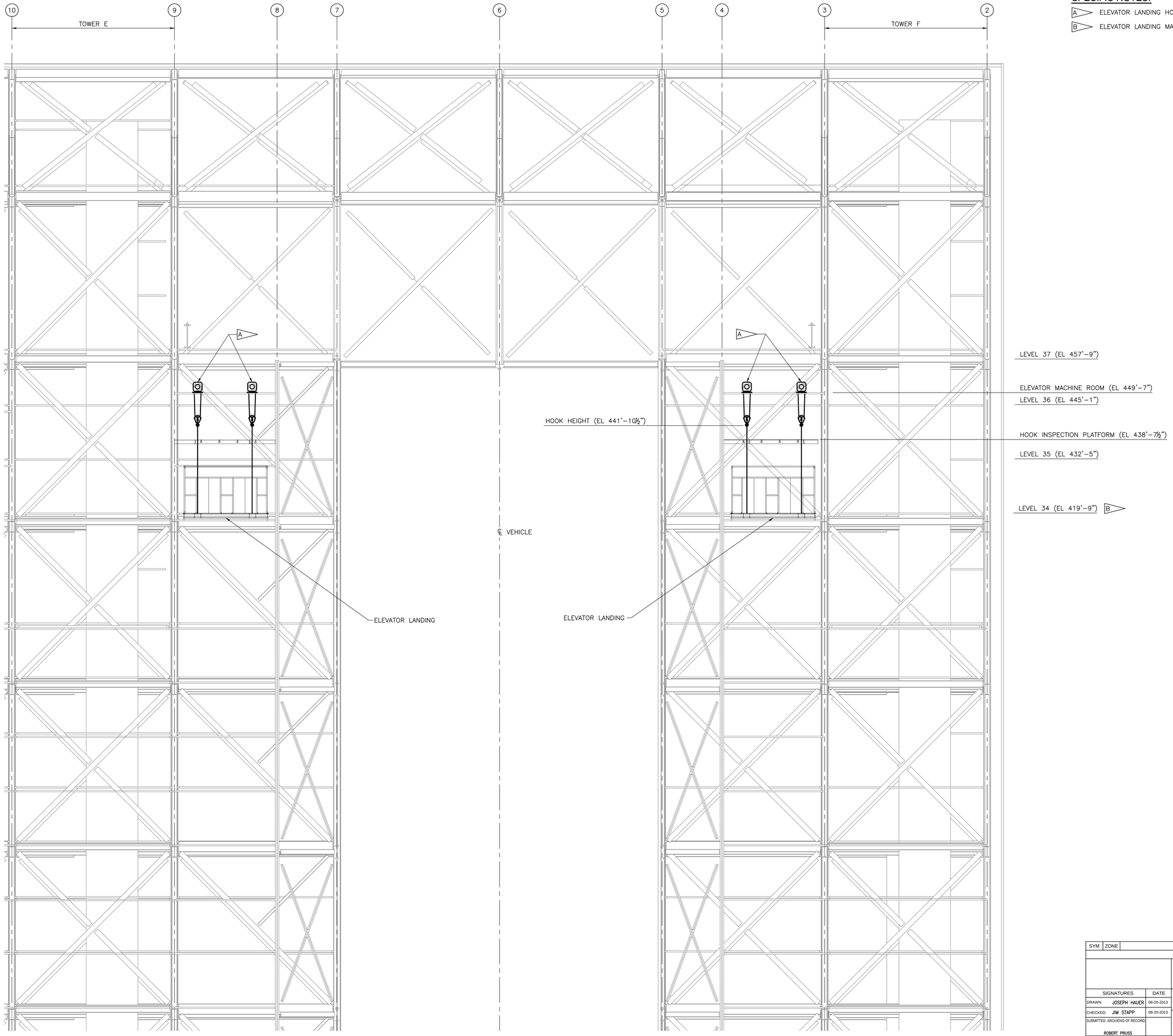

SECTION H M–810
SCALE: 1/8"=1'–0"

4 2 0 4 8 12 16 20
1/8 IN = 1 FT

WHEN PRINTED FULL SIZE, THIS SHEET IS 34"X44"
THIS COMPUTER DRAWING WAS
CREATED IN AUTOCAD AND
FILED UNDER THE DRAWING NUMBER

M–814

SYM	ZONE	DESCRIPTION	DATE	APPROVAL

REVISIONS

RS&H IMPROVING YOUR WORLD
Reynolds, Smith and Hills, Inc.
115 Alma Blvd, Suite 101
Merritt Island, Florida 32953-4101
(321) 453-0212 (321) 453-0223 FAX
www.rsandh.com

SIGNATURES		DATE
DRAWN:	JOSEPH HAUER	08-20-2013
CHECKED:	JIM STAPP	08-20-2013
SUBMITTED: ARCH/ENG OF RECORD:	ROBERT PRUSS	
ST OF LICENSURE: FL		
LICENSE NO:		
APPROVED:	JOHN KERCSMAR	
	MIKE HARTNETT	

NATIONAL AERONAUTICS AND SPACE ADMINISTRATION
JOHN F. KENNEDY SPACE CENTER, NASA
KENNEDY SPACE CENTER, FLORIDA

LAUNCH COMPLEX 39
VEHICLE ASSEMBLY BUILDING

MODIFY VEHICLE ASSEMBLY BUILDING HIGH BAY 3 FOR SLS – HOISTS ELEVATOR LANDINGS HOISTS ELEVATION

FILE NO.	SIZE	DWG. NO.	REV
302–6058–043	E	79K39667	

PROJ. NO. PCN 99000.5 SHEET 29 OF

NOTICE -- WHEN GOVERNMENT DRAWINGS, SPECIFICATIONS, OR OTHER DATA ARE USED FOR ANY PURPOSE OTHER THAN IN CONNECTION WITH A DEFINITELY RELATED GOVERNMENT PROCUREMENT OPERATION, THE UNITED STATES GOVERNMENT THEREBY INCURS NO RESPONSIBILITY NOR ANY OBLIGATION WHATSOEVER; AND THE FACT THAT THE GOVERNMENT MAY HAVE FORMULATED, FURNISHED, OR IN ANY WAY SUPPLIED THE SAID DRAWINGS, SPECIFICATIONS, OR OTHER DATA IS NOT TO BE REGARDED BY IMPLICATION OR OTHERWISE IN ANY MANNER CONSTRUED TO LICENSE THE HOLDER OR ANY OTHER PERSON OR CORPORATION, OR CONVEYING ANY RIGHTS OR PERMISSION TO MANUFACTURE, USE, OR SELL ANY PATENTED INVENTION THAT IN ANY WAY BE RELATED THERETO.

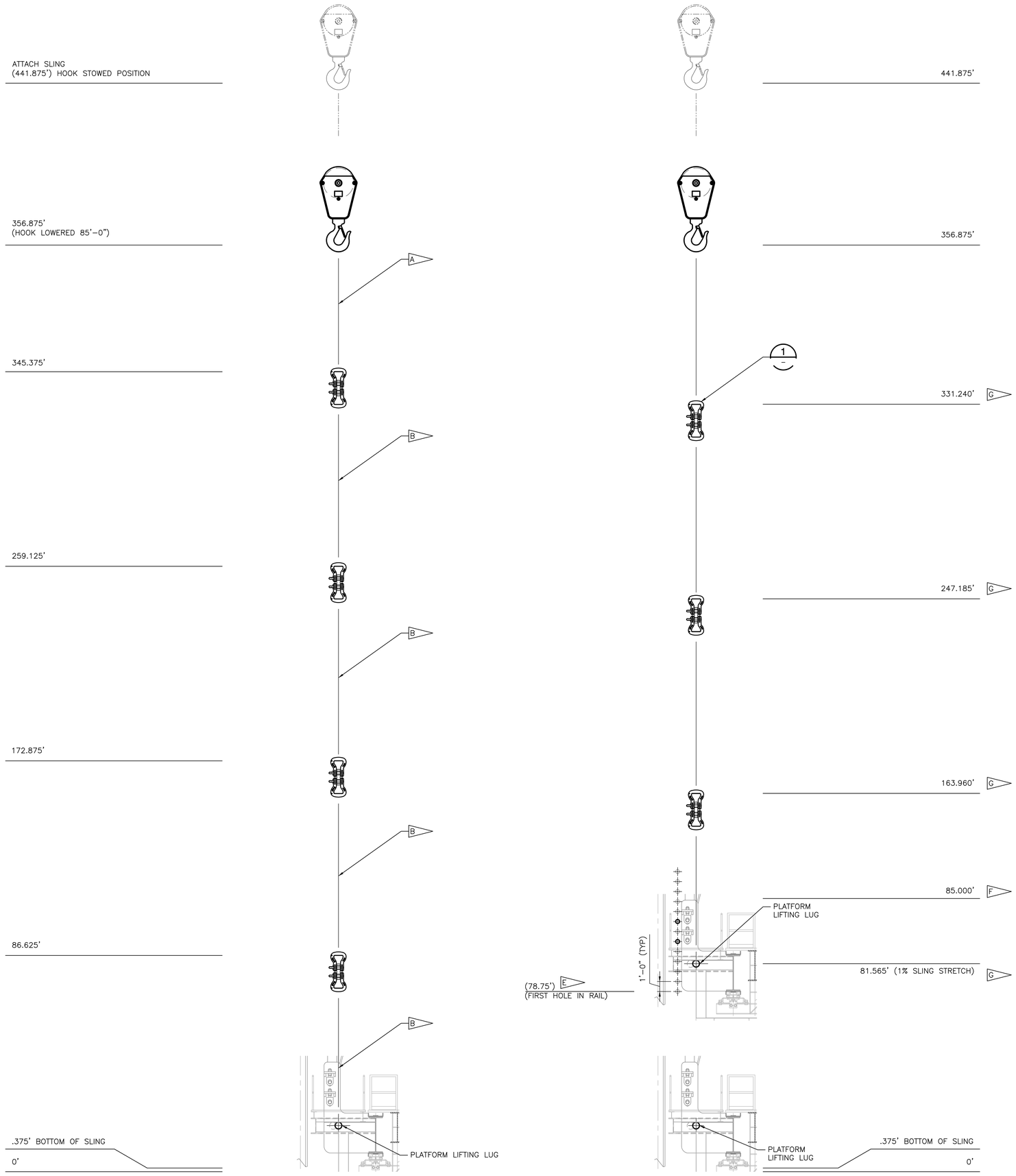

EXTENSIBLE PLATFORM SLING SCHEDULE
SCALE:NTS

EXTENSIBLE PLATFORM SLING SCHEDULE (RAISING PLATFORM)
SCALE:NTS

SPECIFIC NOTES:

A. TPXCF15000-11.5. SLING 150000 LBS VRC W/K-SPEC(R) FIBER AND COVERMAX(TM) COVER, W/CHECK FAST (R) INSPECTION SYSTEM, SLING MAX RIGGING SOLUTIONS (OAE).

B. TPXCF15000-83. SLING 150000 LBS VRC W/K-SPEC(R) FIBER AND COVERMAX(TM) COVER, W/CHECK FAST (R) INSPECTION SYSTEM, SLING MAX RIGGING SOLUTIONS (OAE).

C. G-2160 CROSBY "WIDE BODY" SHACKLE P/N 1021290 75 TON (OAE).

D. A-342 MASTERLINK P/N 1014468 80 TON (OAE).

E. DO NOT ENGAGE LOWER CORBEL PIN BELOW ELEVATION 78.750' TO ENSURE BOTH CORBEL PINS ARE ENGAGED PRIOR TO REMOVING SLINGS.

F. HOIST TRAVEL IS 85.000'. DIMENSION SHOWN IS FROM ELEVATION 0.000' WITHOUT PLATFORM.

G. HOIST TRAVEL IS 85.000'. DIMENSIONS SHOWN ARE FROM ELEVATION 0' WITH PLATFORM BEING LIFTED (INCLUDING SLING STRETCH OF 1%).

H. IN ORDER TO ACCOUNT FOR THE 1% SLING STRETCH, AFTER HOOK IS RAISED 85.000' AND EXTENSIBLE PLATFORM CORBEL PINS ARE ENGAGED, REMOVE AND REPLACE THE LOWEST 83.000' SLING SEGMENT WITH A 5' SLING (P/N TPXCF15000-5). LOWER HOOK AND ATTACH THE 5' SLING TO PLATFORM LIFTING LUG, RAISE EXTENSIBLE PLATFORM TO MAXIMUM AVAILABLE TRACK HOLE LOCATION. AFTER CORBEL PINS ARE ENGAGED REMOVE 5' SLING AND ATTACH REMAINING SLING ASSEMBLY TO THE PLATFORM LIFTING LUG.

J. PRIOR TO TURNING OVER SLINGS TO NASA THEY MUST BE INSPECTED BY NASA QUALITY TO ENSURE SLINGS HAVE NOT BEEN DAMAGED AND ARE STILL IN USABLE CONDITION.

K. SLINGS SHALL BE STORED IN A REUSABLE CRATE WITH NO MORE THAN 4 SLINGS PER CRATE.

SLING / HARDWARE REQD PER HOIST

QTY	TYPE
4X	TPXCF15000-83 (83')
1X	TPXCF15000-11.5 (11'-6")
1X	TPXCF15000-5 (5')
8X	G2160 SHACKLE P/N 1021290 (75 TON)
4X	A-342 MASTER LINK P/N 1014468 (80 TON)

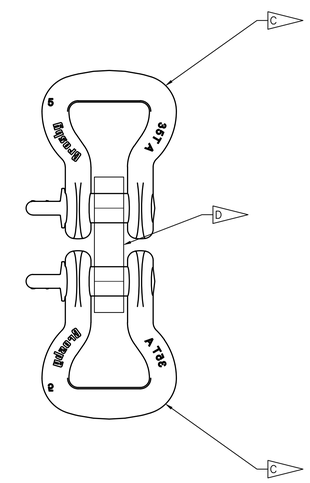

SLING SHACKLE ASSEMBLY (1)
SCALE:3"=1'-0"

WHEN PRINTED FULL SIZE, THIS SHEET IS 34"X44"
THIS COMPUTER DRAWING WAS
CREATED IN AUTOCAD AND
FILED UNDER THE DRAWING NUMBER

M-815

SYM	ZONE	DESCRIPTION	DATE	APPROVAL
		REVISIONS		

RS&H IMPROVING YOUR WORLD
Reynolds, Smith and Hills, Inc.
115 Alma Blvd, Suite 101
Merritt Island, Florida 32953-4101
(321) 453-0212 (321) 453-0223 FAX
www.rsandh.com

SIGNATURES		DATE
DRAWN:	JOSEPH HAUER	08-20-2013
CHECKED:	JIM STAPP	08-20-2013
SUBMITTED: ARCH/ENG OF RECORD	ROBERT PRUSS	
ST OF LICENSURE: FL LICENSE NO:		
APPROVED:	JOHN KERCSMAR	
	MIKE HARTNETT	

NATIONAL AERONAUTICS AND SPACE ADMINISTRATION
JOHN F. KENNEDY SPACE CENTER, NASA
KENNEDY SPACE CENTER, FLORIDA

LAUNCH COMPLEX 39
VEHICLE ASSEMBLY BUILDING

MODIFY VEHICLE ASSEMBLY BUILDING HIGH BAY 3 FOR SLS – HOISTS EXTENSIBLE PLATFORMS HOISTS SLING SCHEDULE

FILE NO.	SIZE	DWG. NO.	REV
302-6058-043	E	79K39667	

PROJ. NO. PCN 99000.5 SHEET 30 OF

NOTICE -- WHEN GOVERNMENT DRAWINGS, SPECIFICATIONS, OR OTHER DATA ARE USED FOR ANY PURPOSE OTHER THAN IN CONNECTION WITH A DEFINITELY RELATED GOVERNMENT PROCUREMENT OPERATION, THE UNITED STATES GOVERNMENT THEREBY INCURS NO RESPONSIBILITY NOR ANY OBLIGATION WHATSOEVER; AND THE FACT THAT THE GOVERNMENT MAY HAVE FORMULATED, FURNISHED, OR IN ANY WAY SUPPLIED THE SAID DRAWINGS, SPECIFICATIONS, OR OTHER DATA IS NOT TO BE REGARDED BY IMPLICATION OR OTHERWISE AS IN ANY MANNER LICENSING THE HOLDER OR ANY OTHER PERSON OR CORPORATION, OR CONVEYING ANY RIGHTS OR PERMISSION TO MANUFACTURE, USE, OR SELL ANY PATENTED INVENTION THAT IN ANY WAY BE RELATED THERETO.

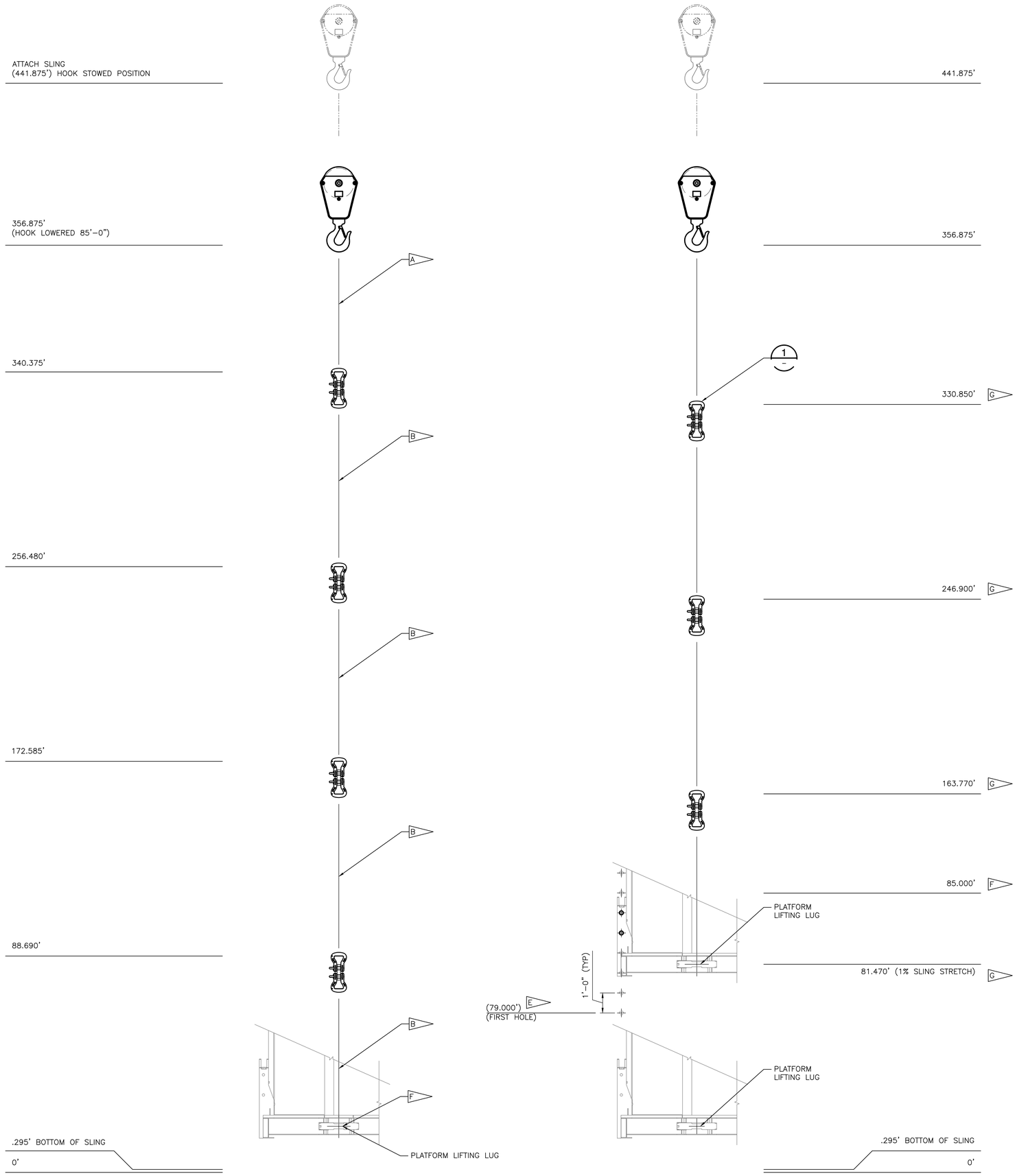

ELEVATOR PLATFORM SLING SCHEDULE
SCALE:NTS

ELEVATOR PLATFORM SLING SCHEDULE
SCALE:NTS

SPECIFIC NOTES:

A. TPXCF2000-21. SLING 70000 LBS VRC W/K-SPEC(R) FIBER AND COVERMAX(TM) COVER, W/CHECK FAST (R) INSPECTION SYSTEM, SLINGMAX RIGGING SOLUTIONS (OAE).

B. TPXCF2000-83. SLING 70000 LBS VRC W/K-SPEC(R) FIBER AND COVERMAX(TM) COVER, W/CHECK FAST (R) INSPECTION SYSTEM, SLINGMAX RIGGING SOLUTIONS (OAE).

C. S-253 SCREW PIN SLING SHACKLE, P/N1020620 12 1/2 TON THE CROSBY GROUP (OAE).

D. S-256 LINK PLATE, P/N1020840 12 1/2 TON THE CROSBY GROUP (OAE).

E. DO NOT ENGAGE LOWER CORBEL PIN BELOW ELEVATION 79.000' TO ENSURE BOTH CORBEL PINS ARE ENGAGED PRIOR TO REMOVING SLINGS.

F. HOIST TRAVEL IS 85.000'. DIMENSION SHOWN IS FROM ELEVATION 0' WITHOUT PLATFORM.

G. HOIST TRAVEL IS 85.000'. DIMENSIONS SHOWN ARE FROM ELEVATION 0.000' WITH PLATFORM BEING LIFTED (INCLUDING SLING STRETCH OF 1%).

H. IN ORDER TO ACCOUNT FOR THE 1% SLING STRETCH, AFTER HOOK IS RAISED 85.000' AND EXTENSIBLE PLATFORM CORBEL PINS ARE ENGAGED, REMOVE AND REPLACE THE LOWEST 83.000' SLING SEGMENT WITH A 5' SLING (P/N TPXCF2000-5). LOWER HOOK AND ATTACH THE 5' SLING TO PLATFORM LIFTING LUG, RAISE EXTENSIBLE PLATFORM TO MAXIMUM AVAILABLE TRACK HOLE LOCATION. AFTER CORBEL PINS ARE ENGAGED REMOVE 5' SLING AND ATTACH REMAINING SLING ASSEMBLY TO THE PLATFORM LIFTING LUG.

J. PRIOR TO TURNING OVER SLINGS TO NASA THEY MUST BE INSPECTED BY NASA QUALITY TO ENSURE SLINGS HAVE NOT BEEN DAMAGED AND ARE STILL IN USABLE CONDITION.

K. SLINGS SHALL BE STORED IN A REUSABLE CRATE WITH NO MORE THAN 4 SLINGS PER CRATE.

SLING / HARDWARE REQD PER HOIST

QTY	TYPE
4X	TPXCF2000-83 (83')
1X	TPXCF2000-21 (21')
1X	TPXCF2000-5 (5')
8X	S-253 SCREW PIN SLING SHACKLE P/N 1020620 (12½ TON)
4X	S-256 LINK-PLATE P/N 1020840 (12½ TON)

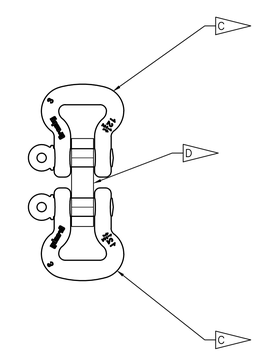

SLING SHACKLE ASSEMBLY (1)
SCALE:3"=1'-0"

WHEN PRINTED FULL SIZE, THIS SHEET IS 34"X44"
THIS COMPUTER DRAWING WAS
CREATED IN AUTOCAD AND
FILED UNDER THE DRAWING NUMBER

M-816

SYM	ZONE	DESCRIPTION	DATE	APPROVAL
		REVISIONS		

RS&H IMPROVING YOUR WORLD
Reynolds, Smith and Hills, Inc.
115 Alma Blvd, Suite 101
Merritt Island, Florida 32953-4101
(321) 453-0212 (321) 453-0223 FAX
www.rsandh.com

SIGNATURES		DATE
DRAWN:	JOSEPH HAUER	08-20-2013
CHECKED:	JIM STAPP	08-20-2013
SUBMITTED: ARCH/ENG OF RECORD:	ROBERT PRUSS	
ST OF LICENSURE: FL LICENSE NO:		
APPROVED:	JOHN KERCSMAR	
	MIKE HARTNETT	

NATIONAL AERONAUTICS AND SPACE ADMINISTRATION
JOHN F. KENNEDY SPACE CENTER, NASA
KENNEDY SPACE CENTER, FLORIDA

LAUNCH COMPLEX 39
VEHICLE ASSEMBLY BUILDING

MODIFY VEHICLE ASSEMBLY BUILDING HIGH BAY 3 FOR SLS – HOISTS ELEVATOR PLATFORMS HOISTS SLING SCHEDULE

FILE NO.	SIZE	DWG. NO.	REV
302-6058-043	E	79K39667	

PROJ. NO. PCN 99000.5 SHEET 31 OF

NOTICE -- WHEN GOVERNMENT DRAWINGS, SPECIFICATIONS, OR OTHER DATA ARE USED FOR ANY PURPOSE OTHER THAN IN CONNECTION WITH A DEFINITELY RELATED GOVERNMENT PROCUREMENT OPERATION, THE UNITED STATES GOVERNMENT THEREBY INCURS NO RESPONSIBILITY NOR ANY OBLIGATION WHATSOEVER; AND THE FACT THAT THE GOVERNMENT MAY HAVE FORMULATED, FURNISHED, OR IN ANY WAY SUPPLIED THE SAID DRAWINGS, SPECIFICATIONS OR ANY OTHER DATA IS NOT TO BE REGARDED BY IMPLICATION OR OTHERWISE IN ANY MANNER LICENSING THE HOLDER OR ANY OTHER PERSONS OR CORPORATION, OR CONVEYING ANY RIGHTS OR PERMISSION TO MANUFACTURE, USE, OR SELL ANY PATENTED INVENTION THAT IN ANY WAY BE RELATED THERETO.

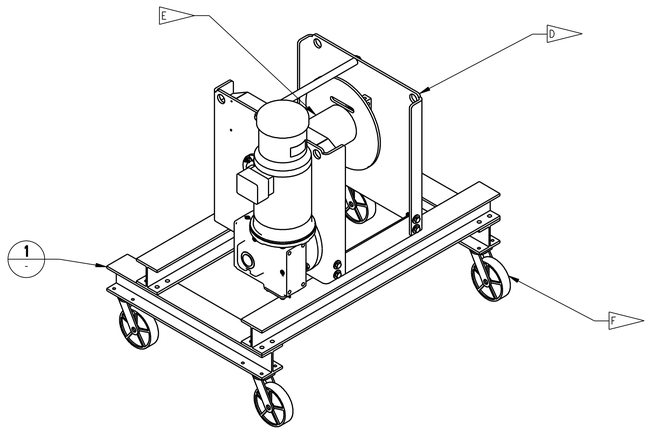

HOIST CART ASSEMBLY ISO
SCALE: 1 1/2"=1'-0"

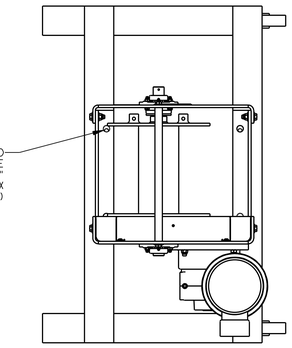

SPECIFIC NOTES

A. TOLERANCES:
X.X +/- 0.1
X.XX +/-0.01
X.XXX +/- .005
ANGLE +/- 0.5

B. CLEAN COMPONENT PARTS PER MIL-S-5002 BEFORE WELDING.

C. WELD PER NASA-SPEC-5004. WELDERS AND WELDING OPERATORS SHALL BE QUALIFIED IN ACCORDANCE WITH AWS D1.1. ALL WELDS REQUIRE A CLASS B INSPECTION UNLESS NOTED AS CLASS A IN THE WELD SYMBOL OR IN THE WELDMENT NOTATION.

D. MODIFIED WORM/SPUR GEAR POWER WINCH WITH A 3 HP, 460-3-60 INPUT VOLTAGE BRAKE MOTOR AND WORM GEAR REDUCER. THE TOTAL REDUCTION RATIO WITH SPUR GEAR IS 114.25 TO 1. ALL COMPONENTS MOUNT ON TO A HEAVY DUTY FRAME WITH MOUNTING HOLES. WINCH IS MODIFIED WITH THE FOLLOWING: GEARBOX ROTATED SO THE MOTOR IS UP.
THE BOLT HOLES WILL BE SIZED TO ACCOMMODATE 1/2" DIAMETER BOLTS AND THERE WILL BE 2 ADDITIONAL HOLES PER SIDE OF WINCH ADDITIONAL HOLES IN FRAME TO MOUNT BRACKET ON OUTBOARD BEARING SIDE OF WINCH. THERN PRODUCT# 10S7E4-S (OAE) MODIFIED SINGLE-SPEED ELECTRIC MOTOR CONTROL, RATED UP TO 7.5 HP AND 460-3-60 LINE VOLTAGE. ELECTRIC MOTOR CONTROL WILL INCLUDE A MAGNETIC REVERSING STARTER, THERMAL OVERLOAD RELAY AND A FUSED CONTROL CIRCUIT IN A NEMA 4 ENCLOSURE. THE ELECTRIC MOTOR CONTROLS WILL ALSO INCLUDE A 50-FOOT PENDANT. THE PENDANT WILL INCLUDE TWO (2) MOMENTARY CONTACT PUSHBUTTONS IN A NEMA 4X ENCLOSURE. PUSHBUTTONS WILL BE LABELED EITHER "UP/DOWN", OR "FWD/REV", DEPENDING ON THE APPLICATION. MODIFIED BRACKET TO MOUNT CONTROL ON OUTBOARD BEARING SIDE OF WINCH. ELECTRIC MOTOR CONTROLS ARE MOUNTED AND WIRED BY THERN EXCEPT FOR THE 4WP, 477 AND 3WG SERIES WINCHES. PLEASE CONTACT THERN FOR MOUNTING OPTIONS ON THESE MODELS.

E. 450 FT OF 3/8" DIAMETER IWRC EIPS (EXTRA IMPROVED PLOW STEEL), ONE END PLAIN AND THE OTHER END WITH AN EYE HOOK AND SAFETY LATCH. SENT LOOSE TO BE INSTALLED BY OTHERS.

F. SERVICE CASTER MEDIUM TO HEAVY DUTY CASTER #30 SERIES PRODUCT# SCC-30CS20-EZPUR-TLB-BSL WITH SIDE LOCK BRAKES AND FACE CONTACT BRAKES OR APPROVED EQUAL (4 PLACES)

G. A TOTAL OF 4 CARTS ARE NEEDED, ONE FOR EACH SERVICE PLATFORM.

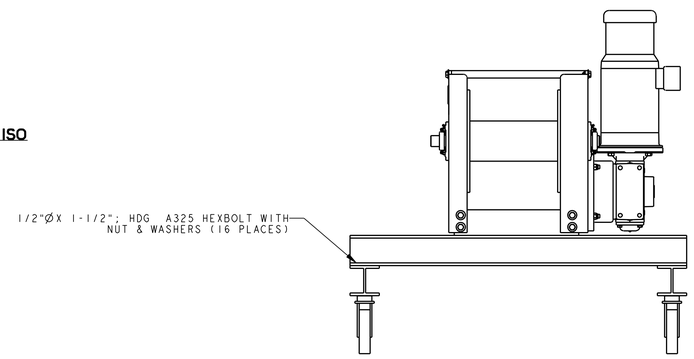

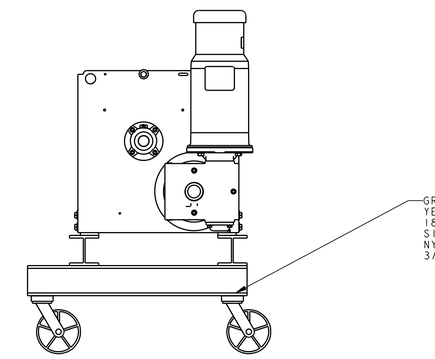

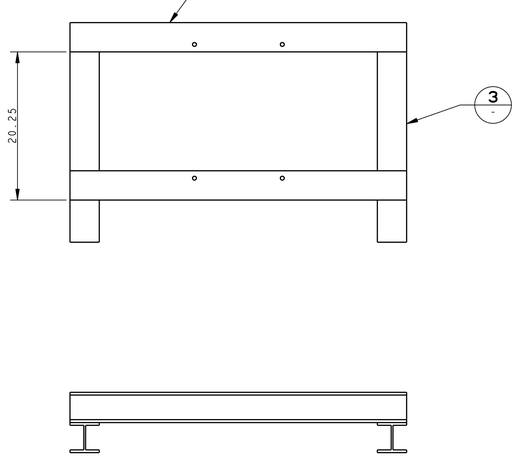

FRAME ASSEMBLY 1
SCALE: 1 1/2"=1'-0"

HOIST CART ASSEMBLY
SCALE: 1 1/2"=1'-0"

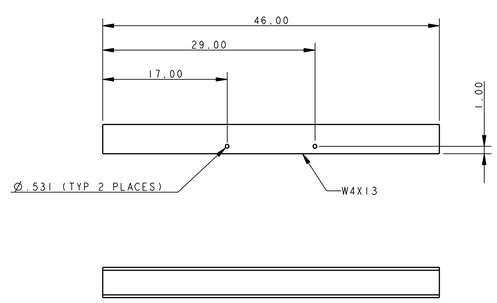

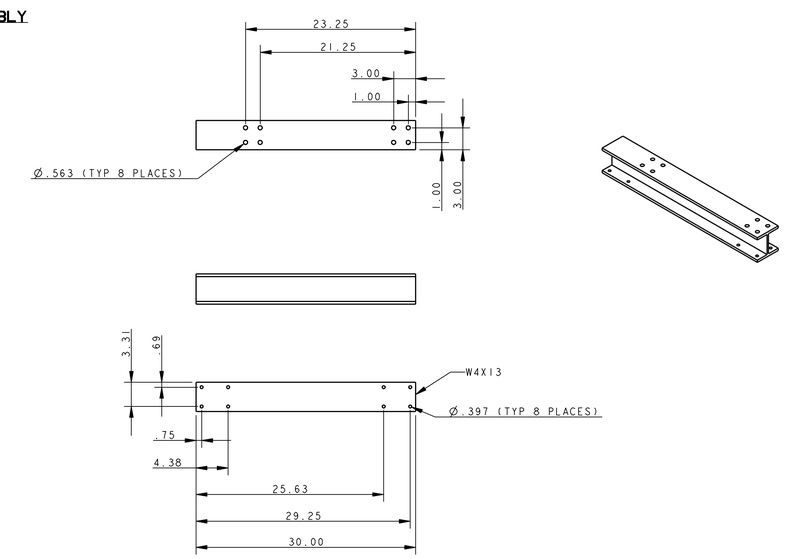

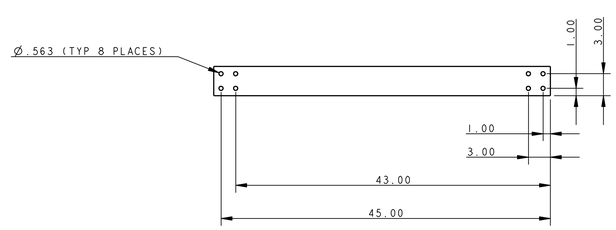

CROSS BEAM 2
SCALE: 1 1/2"=1'-0"

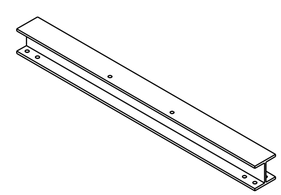

BASE BEAM 3
SCALE: 1 1/2"=1'-0"

1 9" 6" 3" 0 1
1 1/2 IN = 1 FT

WHEN PRINTED FULL SIZE, THIS SHEET IS 34"X44"
THIS COMPUTER DRAWING WAS CREATED IN PRO/ENGINEER AND FILED UNDER THE DRAWING NUMBER

M-817

SYM	ZONE	DESCRIPTION	DATE	APPROVAL
		REVISIONS		

Reynolds, Smith and Hills, Inc.
115 Alma Blvd, Suite 101
Merritt Island, Florida 32953-4101
(321) 453-0212 (321) 453-0223 FAX
www.rsandh.com

SIGNATURES		DATE
DRAWN:	SAM MCMULLEN	08/20/2013
CHECKED:	JOE D'AMICO	08/20/2013
SUBMITTED: ARCH/ENG OF RECORD	ROBERT PRUSS	
ST OF LICENSURE: FL		
LICENSE NO:		
APPROVED:	STEVE MOORE	
	MIKE HARTNETT	

NATIONAL AERONAUTICS AND SPACE ADMINISTRATION
JOHN F. KENNEDY SPACE CENTER, NASA
KENNEDY SPACE CENTER, FLORIDA

LAUNCH COMPLEX 39
VEHICLE ASSEMBLY BUILDING
MODIFY VEHICLE ASSEMBLY BUILDING
HIGH BAY 3 FOR SLS - HOISTS
ELEVATOR PLATFORMS HOIST
HOIST CART

FILE NO.	SIZE	DWG. NO.	REV
302-6058-043	E	79K39667	-

PROJ. NO. PCN 99000.5 SHEET 32 OF

NOTICE – WHEN GOVERNMENT DRAWINGS, SPECIFICATIONS, OR OTHER DATA ARE USED FOR ANY PURPOSE OTHER THAN IN CONNECTION WITH A DEFINITELY RELATED GOVERNMENT PROCUREMENT OPERATION, THE UNITED STATES GOVERNMENT THEREBY INCURS NO RESPONSIBILITY NOR ANY OBLIGATION WHATSOEVER; AND THE FACT THAT THE GOVERNMENT MAY HAVE FORMULATED, FURNISHED, OR IN ANY WAY SUPPLIED THE SAID DRAWINGS, SPECIFICATIONS OR ANY OTHER DATA IS NOT TO BE REGARDED BY IMPLICATION OR OTHERWISE IN ANY MANNER LICENSING THE HOLDER OR ANY OTHER PERSONS OR CORPORATION, OR CONVEYING ANY RIGHTS OR PERMISSION TO MANUFACTURE, USE, OR SELL ANY PATENTED INVENTION THAT IN ANY WAY BE RELATED THERETO.

ABBREVIATIONS

AF	AMP–FRAME
AFF	ABOVE FINISHED FLOOR
AFG	ABOVE FINISHED GRADE
AIC	AMPERAGE INTERRUPTING CAPACITIES
AMP	AMPERE
C, COND	CONDUIT
CFP	CUSTOMER FACE PLATE
CID1	CLASS 1, DIVISION 1
CID2	CLASS 1, DIVISION 2
CB	CIRCUIT BREAKER
CKT	CIRCUIT
CNTR	CONTROLLER
COMM	COMMUNICATION
CORR	CORRIDOR
DR	DROP RESISTANT
ELEV	ELEVATOR
EP	EXPLOSION PROOF
EST	ESTIMATED
FA	FIRE ALARM
FDLT	FLOODLIGHT
FDR	FEEDER
FL	FLOOR
GFCI	GROUND FAULT CIRCUIT INTERRUPTER
GND	GROUND
HID	HIGH INTENSITY DISCHARGE
HOA	HAND–OFF–AUTOMATIC
HOR	HAND–OFF–REMOTE
HP	HORSE POWER
HVAC	HEATING, VENTILATING AND AIR CONDITIONING
IAW	IN ACCORDANCE WITH
KVA	KILO–VOLT AMPERE
LED	LIGHT EMITTING DIODE
LC	LIGHTING CONTACTOR
LCC	LAUNCH CONTROL CENTER
LP	LIGHTING PANEL
LSIG	LONG, SHORT, INSTANTANEOUS AND GROUND
LTG	LIGHTING
LVL	LEVEL
NEC	NATIONAL ELECTRICAL CODE
MCB	MAIN CIRCUIT BREAKER
MCC	MOTOR CONTROL CENTER
MDP	MAIN DISTRIBUTION PANEL
MLO	MAIN LUG ONLY
MP	MECHANICAL PANEL
NIC	NOT IN CONTRACT
PLAT	PLATFORM
POS	POSITION
RCP	RECEPTACLE PANEL
RECPT/ RECP	RECEPTACLE
RGS	RIGID GALVANIZED STEEL
RM	ROOM
SP	SYSTEMS PANEL
SPD	SURGE PROTECTION DEVICE
SS	STAINLESS STEEL
SUBSTA	SUBSTATION
SWBD	SWITCHBOARD
TVSS	TRANSIENT VOLTAGE SURGE SUPPRESSOR
UON	UNLESS OTHERWISE NOTED
UTIL	UTILITY
USS	UNIT SUBSTATION
XFMR	TRANSFORMER

SYMBOLS LEGEND

- DUPLEX RECEPTACLE, 120V, 20A, NEMA 5–20R
- L16–20R — SPECIAL PURPOSE RECEPTACLE, TYPE AS INDICATED
- 1 X — LINEAR FLUORESCENT LIGHTING (X = FIXTURE TYPE, REFERENCE LIGHTING DETAILS; NUMBER REPRESENTS CIRCUITING)
- 1 X — WALL MOUNTED LINEAR FLUORESCENT LIGHTING (X = FIXTURE TYPE, REFERENCE LIGHTING DETAILS; NUMBER REPRESENTS CIRCUITING)
- WALL MOUNTED LINEAR FLUORESCENT LIGHTING FED BY EMERGENCY CIRCUIT
- ST — TIME DELAY SWITCH
- S — TOGGLE SWITCH
- EXISTING SURFACE MOUNTED LIGHT FIXTURE
- EXISTING SURFACE MOUNTED LIGHT FIXTURE FED BY EMERGENCY CIRCUIT
- X — MOTOR (X = INDICATES HP RATING)
- HEAVY DUTY DISCONNECT SWITCH
- HEAVY DUTY CB DISCONNECT SWITCH
- PB — PULL BOX
- J OR J — JUNCTION BOX
- 3P 20/30 4X — RATING NOMENCLATURE (3P = NUMBER OF POLES, 20 = AMP TRIP/ FUSED, 30 = AMP FRAME/ RATED, 4X = ENCLOSURE NEMA RATING)
- PANELBOARD 277/480V, 3 PHASE, 4 WIRE OR 480V, 3 PHASE, 3 WIRE AS INDICATED
- CONTROLLER/ ENCLOSURE (AS INDICATED)

LINE TYPE LEGEND

- EXPOSED, POWER CIRCUITING
- LOW VOLTAGE (12V) POWER CIRCUITING

CIRCUITING LEGEND

2 SETS – (3)#500,(1)#500N,(1)#4G
3" RGS C

- 2 PARALLEL RUNS OF SINGLE CONDUCTOR CABLES MADE UP OF 4 #500 AND A # 4 GROUND.
- EACH SET OF CONDUCTORS INSTALLED IN A 3" RGS C

5C(4#500,1#4G)
CT

- MULTICONDUCTOR CABLE MADE UP OF 4 #500 AND A #4 GROUND CONDUCTOR.
- ROUTED IN CABLE TRAY

MDP–1,3,5

- HOMERUN TO PANEL MDP CIRCUITS 1, 3 AND 5, SIZED AS INDICATED IN PANEL SCHEDULE.

XNA3PA/12

- # = CIRCUIT DESIGNATION
- A = 480VAC OR 480/277VAC
  B = 208/120VAC
- P = POWER DISTRIBUTION OR MECHANICAL POWER
  L = LIGHTING/ RECEPTACLE LOADS
- 3 = HIGHBAY 3
- PLATFORM LEVEL (SLS INSTALLATION HEIGHTS)
  A = 345' AFF
  B = 309' AFF
  C = 291' AFF
  D = 275' AFF
  E = 255' AFF
  F = 192' AFF
  G = 166' AFF
  H = 139' AFF
  J = 112' AFF
  K = 86' AFF
- N = NORTH HIGH BAY
  S = SOUTH HIGH BAY
- X = EXTENSIBLE

7EPA/12

- # = CIRCUIT DESIGNATION
- A = 480VAC OR 480/277VAC
  B = 208/120VAC
- P = POWER DISTRIBUTION OR MECHANICAL POWER
  L = LIGHTING/ RECEPTACLE LOADS
- E = TOWER E
  F = TOWER F
- 7 = FLOOR LEVEL

GENERAL NOTES

1. ALL ELECTRICAL PANELS, SWITCHBOARDS, SWITCHGEAR, AND OTHER ENCLOSURES OF ELECTRICAL EQUIPMENT REQUIRING ACCESS FOR MAINTENANCE, TESTING, AND/OR TROUBLESHOOTING, SHALL BE LABELED WITH ARC FLASH WARNING LABELS. ARC FLASH CALCULATIONS SHALL BE PERFORMED FOR EACH OF THE ITEMS LISTED ABOVE. ARC FLASH LABELING SHALL IDENTIFY PROPER PPE AND CLEARANCES REQUIRED AND BE AFFIXED TO THE EQUIPMENT IAW THE LATEST EDITION OF NFPA 70E.
2. CONSTRUCTION OF THE ELECTRICAL SYSTEMS SHALL BE PERFORMED IAW WITH ALL LOCAL AND NATIONAL CODES, INCLUDING THE LATEST EDITIONS OF, BUT NOT LIMITED TO: NFPA 70, NFPA 70E, NFPA 780 AND NFPA 497.
3. ALL ELECTRICAL DISCONNECTS, BREAKERS, OR ANY OTHER MEANS OF ISOLATING POWER SOURCES FROM THEIR LOADS, SHALL BE CAPABLE OF BEING LOCKED WITH A PAD LOCK. ITEMS SUCH AS BREAKER HANDLES UNABLE TO BE LOCKED DIRECTLY SHALL BE MANUFACTURED AND INSTALLED IN A MANNER IN WHICH AN OSHA APPROVED LOCKOUT/TAGOUT LOCKING MECHANISM IN CONJUNCTION WITH A PADLOCK WILL RENDER THEM INOPERATIVE.
4. POWER DISTRIBUTION EQUIPMENT LOCATION AND SCHEDULING ARE BASED ON ELECTRICAL AS–BUILT DRAWINGS 39K6150009 (LAUNCH COMPLEX 39 VAB TOWER E SECONDARY VOLTAGE POWER DISTRIBUTION SYSTEM) AND 39K6150010 (LAUNCH COMPLEX 39 SECONDARY VOLTAGE POWER DISTRIBUTION SYSTEM VAB – TOWER F).

GENERAL DEMOLITION NOTES

1. THE DEMOLITION PLAN IS INTENDED TO SHOW THE GENERAL SCOPE OF WORK AND DOES NOT SHOW EVERY DEVICE, BOX, CONDUIT, PANEL, ETC. TO BE REMOVED. FIELD VERIFY OTHER ELECTRICAL SERVICE THAT MAY BE ENCOUNTERED DURING DEMOLITION AND REMOVE THESE ITEMS AS REQUIRED.
2. REMOVE EXISTING LIGHTING FIXTURES, LIGHTING CONTROLS, POWER RECEPTACLES AND COMMUNICATIONS OUTLETS AS INDICATED ON ELECTRICAL DEMOLITION DRAWINGS. REMOVE ASSOCIATED BRANCH CIRCUITS AND CONDUITS BACK TO THE POINT OF ORIGIN.
3. QUANTITIES AND LOCATIONS OF EQUIPMENT AND DEVICES SHOWN ARE BASED ON AS–BUILT DRAWINGS DATED JANUARY 1967 AND INFORMATION GATHERED DURING SITE VISITS. CONTRACTOR TO FIELD VERIFY.
4. COORDINATE ELECTRICAL DEMOLITION WORK WITH MECHANICAL, STRUCTURAL AND ARCHITECTURAL.

WHEN PRINTED FULL SIZE, THIS SHEET IS 34"X44"
THIS COMPUTER DRAWING WAS CREATED IN AUTOCAD AND FILED UNDER THE DRAWING NUMBER

E–001

SYM	ZONE	DESCRIPTION	DATE	APPROVAL
		REVISIONS		

RS&H IMPROVING YOUR WORLD
Reynolds, Smith and Hills, Inc.
115 Alma Blvd, Suite 101
Merritt Island, Florida 32953-4101
(321) 453-0212 (321) 453-0223 FAX
www.rsandh.com

SIGNATURES		DATE
DRAWN:	JOSEPH HAUER	08-20-2013
CHECKED:	DANIEL VICEANT	08-20-2013
SUBMITTED: ARCHENG OF RECORD	KEVIN HARRIS	
ST OF LICENSURE: FL LICENSE NO:		
APPROVED:	JOHN KERCSMAR	
	MIKE HARTNETT	

NATIONAL AERONAUTICS AND SPACE ADMINISTRATION
JOHN F. KENNEDY SPACE CENTER, NASA
KENNEDY SPACE CENTER, FLORIDA

LAUNCH COMPLEX 39
VEHICLE ASSEMBLY BUILDING

MODIFY VEHICLE ASSEMBLY BUILDING HIGH BAY 3 FOR SLS – HOISTS ELECTRICAL GENERAL NOTES, LEGEND AND ABBREVIATIONS

FILE NO.	SIZE	DWG. NO.	REV
302-6058-043	E	79K39667	

PROJ. NO. PCN 99000.5 SHEET 33 OF

NOTICE -- WHEN GOVERNMENT DRAWINGS, SPECIFICATIONS, OR OTHER DATA ARE USED FOR ANY PURPOSE OTHER THAN IN CONNECTION WITH A DEFINITELY RELATED GOVERNMENT PROCUREMENT OPERATION, THE UNITED STATES GOVERNMENT THEREBY INCURS NO RESPONSIBILITY NOR ANY OBLIGATION WHATSOEVER; AND THE FACT THAT THE GOVERNMENT MAY HAVE FORMULATED, FURNISHED, OR IN ANY WAY SUPPLIED THE SAID DRAWINGS, SPECIFICATIONS OR ANY OTHER DATA IS NOT TO BE REGARDED BY IMPLICATION OR OTHERWISE IN ANY MANNER LICENSING THE HOLDER OR ANY OTHER PERSONS OR CORPORATION, OR CONVEYING ANY RIGHTS OR PERMISSION TO MANUFACTURE, USE, OR SELL ANY PATENTED INVENTION THAT IN ANY WAY BE RELATED THERETO.

TOWER F - HOIST 1
SCALE: NTS

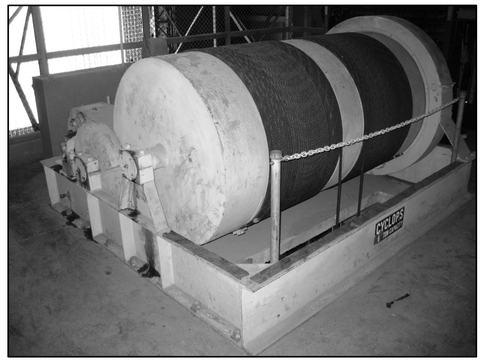

TOWER F - HOIST 2
SCALE: NTS

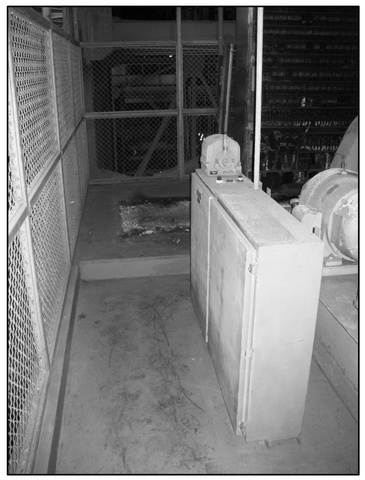

TOWER F - HOIST CNTR 3
SCALE: NTS

TOWER F - DISPATCHER 4
SCALE: NTS

TOWER F - CONTROLLER 5
SCALE: NTS

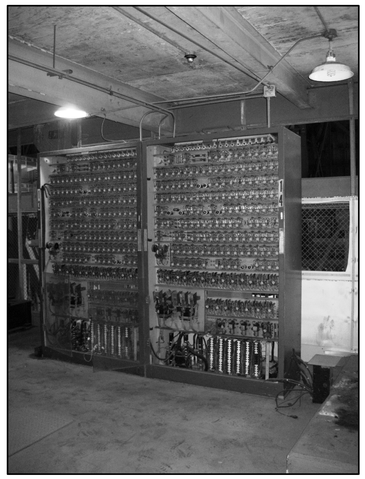

TOWER E - CONTROL 6
SCALE: NTS

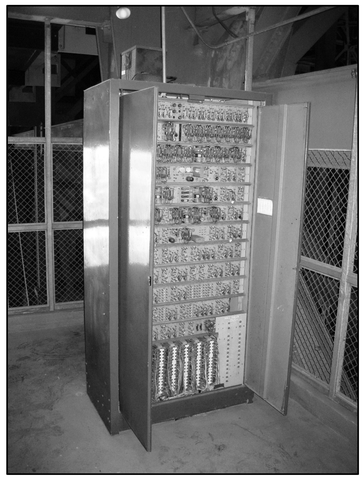

TOWER E - DISPATCHER 7
SCALE: NTS

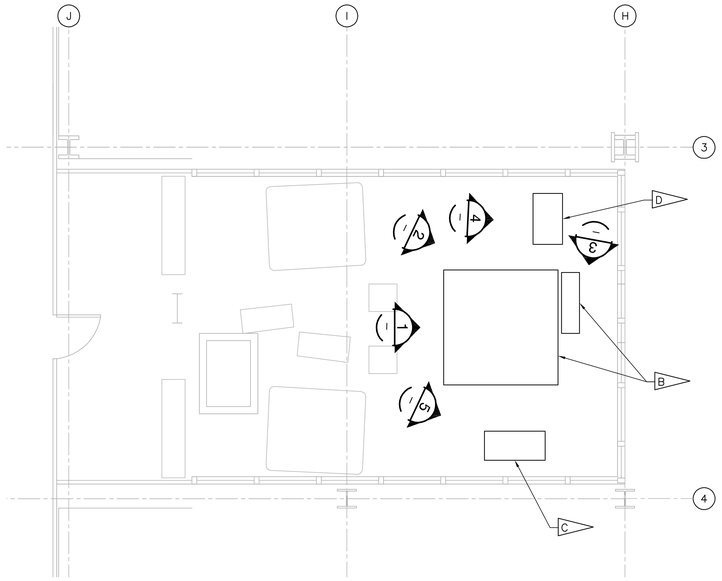

LEVEL 36 - ELECTRICAL DEMOLITION - TOWER F
SCALE: 1/4" = 1'-0"

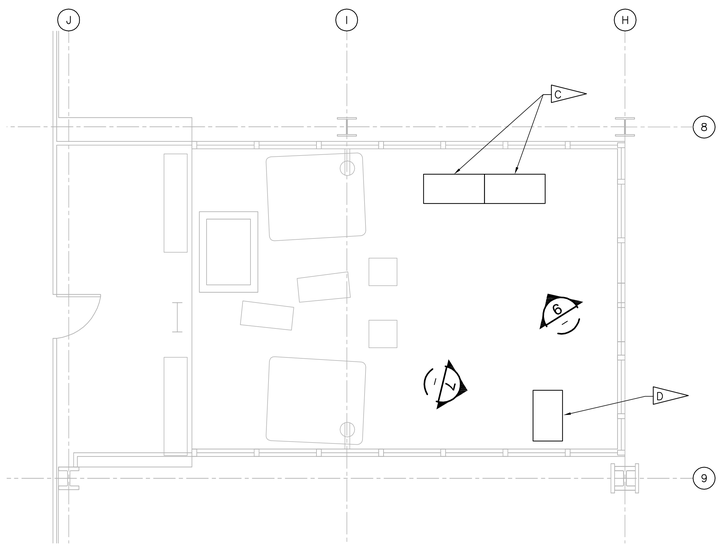

LEVEL 36 - ELECTRICAL DEMOLITION - TOWER E
SCALE: 1/4" = 1'-0"

SPECIFIC NOTES:

A. NOT ALL ELEVATOR EQUIPMENT AND ACCESSORY CABINETS ARE SHOWN.

B. REMOVE EXISTING ABANDONED IN PLACE PLATFORM HOIST, ASSOCIATED CABLING, RACEWAYS AND CONTROLLER IN THEIR ENTIRETY.

C. REMOVE EXISTING ABANDONED IN PLACE ELEVATOR CONTROL CABINET(S), ASSOCIATED CABLING AND RACEWAYS IN THEIR ENTIRETY.

D. REMOVE EXISTING ABANDONED IN PLACE ELEVATOR DISPATCHER CABINET ASSOCIATED CABLING AND RACEWAYS IN THEIR ENTIRETY.

E. CONTRACTOR SHALL COORDINATE HERITAGE EQUIPMENT REMOVAL WITH THE ENVIRONMENTAL SPECIFICATIONS.

F. COORDINATE THE REMOVAL OF EQUIPMENT WITH MECHANICAL AND STRUCTURAL DISCIPLINES. REFER TO STRUCTURAL DRAWINGS FOR THE PATCHING OF FLOOR PENETRATIONS.

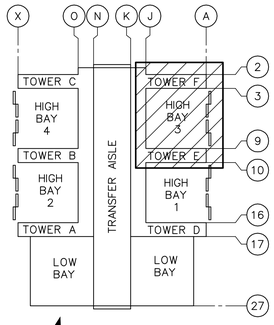

VAB KEY PLAN
SCALE: NTS

2 1 0 2 4 6 8 10
1/4 IN = 1 FT

WHEN PRINTED FULL SIZE, THIS SHEET IS 34"X44"
THIS COMPUTER DRAWING WAS CREATED IN AUTOCAD AND FILED UNDER THE DRAWING NUMBER

ED-136

SYM	ZONE	DESCRIPTION	DATE	APPROVAL

REVISIONS

RS&H IMPROVING YOUR WORLD
Reynolds, Smith and Hills, Inc.
115 Alma Blvd, Suite 101
Merritt Island, Florida 32953-4101
(321) 453-0212 (321) 453-0223 FAX
www.rsandh.com

SIGNATURES		DATE
DRAWN:	JOSEPH HAUER	08-20-2013
CHECKED:	DANIEL VICEANT	08-20-2013
SUBMITTED: ARCH/ENG OF RECORD	KEVIN HARRIS	
ST OF LICENSURE: FL		
LICENSE NO:		
APPROVED:	JOHN KERCSMAR	
	MIKE HARTNETT	

NATIONAL AERONAUTICS AND SPACE ADMINISTRATION
JOHN F. KENNEDY SPACE CENTER, NASA
KENNEDY SPACE CENTER, FLORIDA

LAUNCH COMPLEX 39
VEHICLE ASSEMBLY BUILDING

MODIFY VEHICLE ASSEMBLY BUILDING HIGH BAY 3 FOR SLS – HOISTS LEVEL 36 – ELECTRICAL DEMOLITION PLANS

FILE NO.	SIZE	DWG. NO.	REV
302-6058-043	E	79K39667	

PROJ. NO. PCN 99000.5 SHEET 34 OF

NOTICE -- WHEN GOVERNMENT DRAWINGS, SPECIFICATIONS, OR OTHER DATA ARE USED FOR ANY PURPOSE OTHER THAN IN CONNECTION WITH A DEFINITELY RELATED GOVERNMENT PROCUREMENT OPERATION, THE UNITED STATES GOVERNMENT THEREBY INCURS NO RESPONSIBILITY NOR ANY OBLIGATION WHATSOEVER; AND THE FACT THAT THE GOVERNMENT MAY HAVE FORMULATED, FURNISHED, OR IN ANY WAY SUPPLIED THE SAID DRAWINGS, SPECIFICATIONS OR ANY OTHER DATA IS NOT TO BE REGARDED BY IMPLICATION OR OTHERWISE IN ANY MANNER LICENSING THE HOLDER OR ANY OTHER PERSONS OR CORPORATION, OR CONVEYING ANY RIGHTS OR PERMISSION TO MANUFACTURE, USE, OR SELL ANY PATENTED INVENTION THAT IN ANY WAY BE RELATED THERETO.

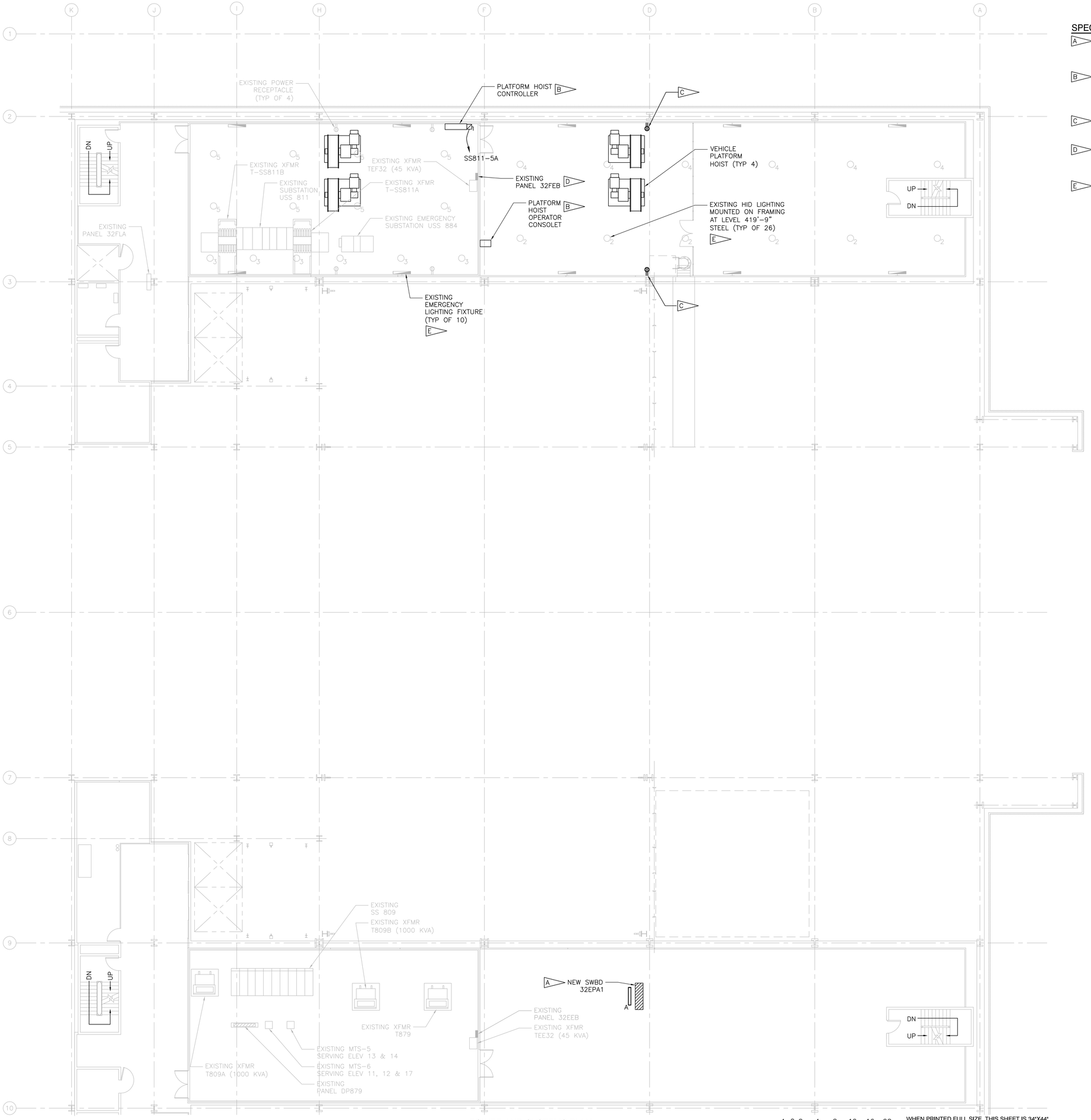

SPECIFIC NOTES:

A. PROVIDE 1200A, 480V, 3PH, 3W DISTRIBUTION SWITCHBOARD 32EPA1. SEE E-601 FOR ONE-LINE AND PANEL SCHEDULE AND E-580 FOR MOUNTING DETAILS. EXTEND EXISTING LIGHTING CIRCUITS OVER SS809 FOR NEW TYPE A FIXTURE OVER SWBD 32EPA1.

B. SEE E-641 FOR PLATFORM HOIST ELEMENTARY CONTROLLER DIAGRAM AND TYPICAL OPERATOR CONSOLET ELEVATION. SEE SPECIFICATIONS 41 22 23.19 FOR REQUIRED EQUIPMENT PARAMETERS. COORDINATE LOCATION OF CONTROLLER WITH HOIST EQUIPMENT MANUFACTURER AND EXISTING FACILITY STRUCTURE.

C. PROVIDE NEW CONVENIENCE RECEPTACLE RECEIVING POWER FROM EXISTING PANEL 32FEB CIRCUIT 14. SURFACE MOUNT RECEPTACLE ON EXISTING STRUCTURAL COLUMN. REFER TO DRAWING E-580 FOR ADDITIONAL DETAIL.

D. PROVIDE STRUCTURE TO INDEPENDENTLY SUPPORT EXISTING PANELBOARD 32FEB AND RACEWAYS. PANELBOARD 32FEB AND ITS ASSOCIATED RACEWAYS ARE CURRENTLY SUPPORTED BY THE FENCING BEING REMOVED. SEE SHEET A-506 FOR FENCING MODIFICATION PLANS.

E. PROVIDE NEW LAMPS FOR EXISTING 400W MERCURY VAPOR HID AND SINGLE TUBE FLUORESCENT EMERGENCY LIGHTING. CONTRACTOR TO SERVICE FIXTURES AND REWORK LIGHTING CIRCUITS BACK TO PANEL 32FLA FOR HID LIGHTING AND EMERGENCY PANEL 28FEA FOR THE EMERGENCY FIXTURES AS REQUIRED FOR FULLY FUNCTIONING FIXTURES. PROVIDE SWITCH-RATED CIRCUIT BREAKERS FOR CONTROLLING FIXTURES.

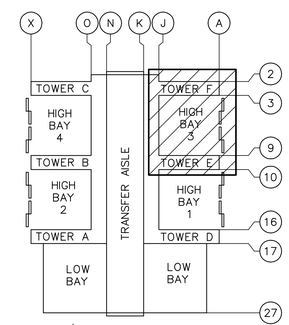

VAB KEY PLAN
SCALE: NTS

POWER AND SYSTEMS PLAN
SCALE: 1/8" = 1'-0"

4 2 0 4 8 12 16 20
1/8 IN = 1 FT

WHEN PRINTED FULL SIZE, THIS SHEET IS 34"X44"
THIS COMPUTER DRAWING WAS CREATED IN AUTOCAD AND FILED UNDER THE DRAWING NUMBER

E-132

SYM	ZONE	DESCRIPTION	DATE	APPROVAL
		REVISIONS		

RS&H IMPROVING YOUR WORLD
Reynolds, Smith and Hills, Inc.
115 Alma Blvd, Suite 101
Merritt Island, Florida 32953-4101
(321) 453-0212 (321) 453-0223 FAX
www.rsandh.com

SIGNATURES		DATE
DRAWN:	JOSEPH HAUER	08-20-2013
CHECKED:	DANIEL VICEANT	08-20-2013
SUBMITTED: ARCH/ENG OF RECORD	KEVIN HARRIS	
ST OF LICENSURE: FL		
LICENSE NO:		
APPROVED:	JOHN KERCSMAR	
	MIKE HARTNETT	

NATIONAL AERONAUTICS AND SPACE ADMINISTRATION
JOHN F. KENNEDY SPACE CENTER, NASA
KENNEDY SPACE CENTER, FLORIDA

LAUNCH COMPLEX 39
VEHICLE ASSEMBLY BUILDING

MODIFY VEHICLE ASSEMBLY BUILDING HIGH BAY 3 FOR SLS – HOISTS LEVEL 32 – ELECTRICAL PLAN

FILE NO.	SIZE	DWG. NO.	REV
302-6058-043	E	79K39667	

PROJ. NO. PCN 99000.5 SHEET 35 OF

NOTICE -- WHEN GOVERNMENT DRAWINGS, SPECIFICATIONS, OR OTHER DATA ARE USED FOR ANY PURPOSE OTHER THAN IN CONNECTION WITH A DEFINITELY RELATED GOVERNMENT PROCUREMENT OPERATION, THE UNITED STATES GOVERNMENT THEREBY INCURS NO RESPONSIBILITY NOR ANY OBLIGATION WHATSOEVER; AND THE FACT THAT THE GOVERNMENT MAY HAVE FORMULATED, FURNISHED, OR IN ANY WAY SUPPLIED THE SAID DRAWINGS, SPECIFICATIONS OR ANY OTHER DATA IS NOT TO BE REGARDED BY IMPLICATION OR OTHERWISE IN ANY MANNER LICENSING THE HOLDER OR ANY OTHER PERSONS OR CORPORATION, OR CONVEYING ANY RIGHTS OR PERMISSION TO MANUFACTURE, USE, OR SELL ANY PATENTED INVENTION THAT IN ANY WAY BE RELATED THERETO.

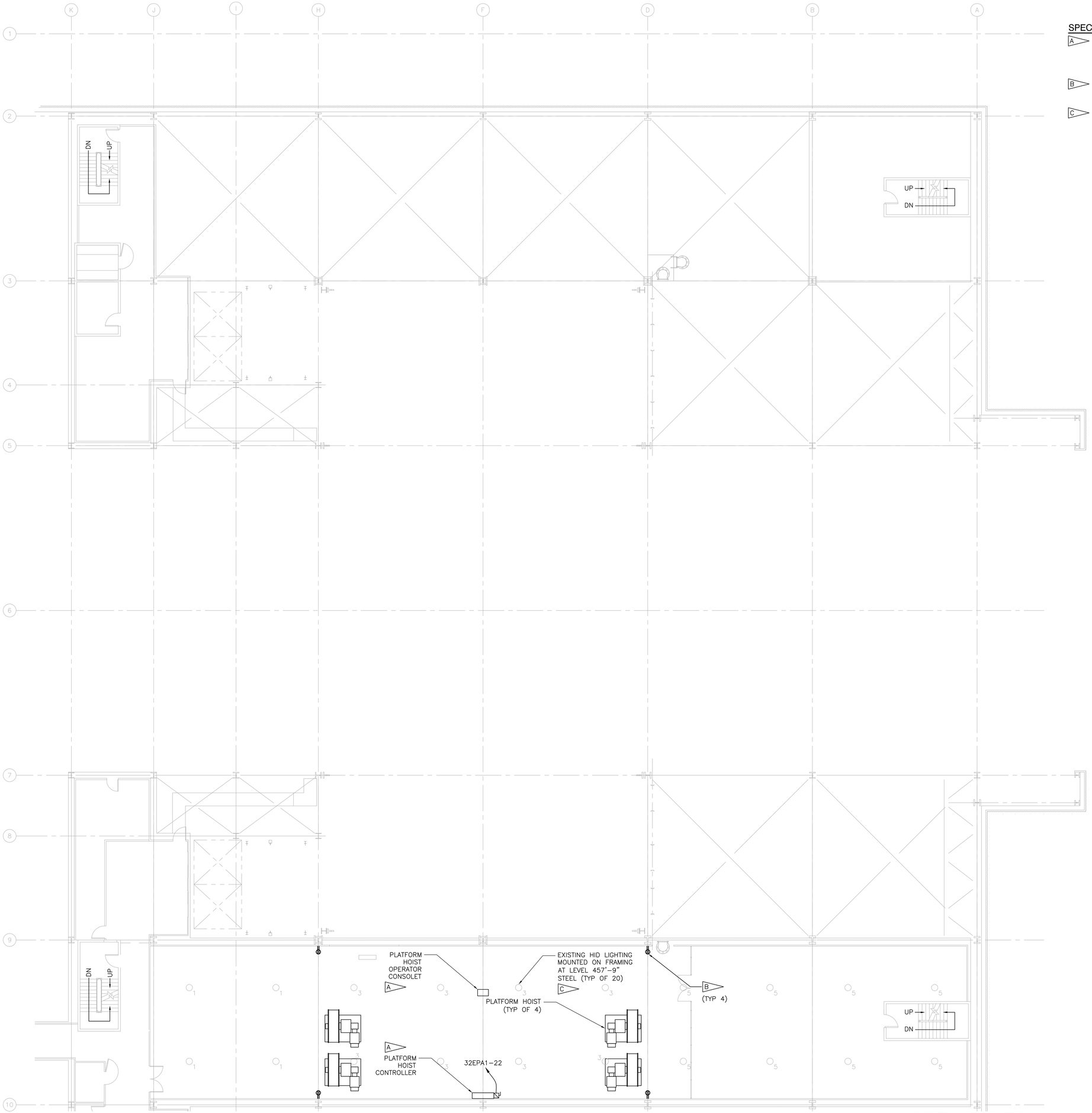

POWER AND SYSTEMS PLAN
SCALE: 1/8" = 1'-0"

4 2 0 4 8 12 16 20
1/8 IN = 1 FT

WHEN PRINTED FULL SIZE, THIS SHEET IS 34"X44"
THIS COMPUTER DRAWING WAS
CREATED IN AUTOCAD AND
FILED UNDER THE DRAWING NUMBER

E-134

SPECIFIC NOTES:

A. SEE E-641 FOR PLATFORM HOIST ELEMENTARY CONTROLLER DIAGRAM AND TYPICAL OPERATOR CONSOLET ELEVATION. SEE SPECIFICATIONS 41 22 23.19 FOR REQUIRED EQUIPMENT PARAMETERS. COORDINATE LOCATION OF CONTROLLER WITH HOIST EQUIPMENT MANUFACTURER AND EXISTING FACILITY STRUCTURE.

B. PROVIDE NEW CONVENIENCE RECEPTACLE RECEIVING POWER FROM EXISTING PANEL 32EEB CIRCUIT 17. SURFACE MOUNT RECEPTACLE ON EXISTING STRUCTURAL COLUMN. REFER TO DRAWING E-580 FOR ADDITIONAL DETAIL.

C. PROVIDE NEW LAMPS FOR EXISTING 400W MERCURY VAPOR HID. CONTRACTOR TO SERVICE FIXTURES AND REWORK LIGHTING CIRCUITS BACK TO PANEL 34ELA FOR HID LIGHTING AS REQUIRED FOR FULLY FUNCTIONING FIXTURES. PROVIDE SWITCH-RATED CIRCUIT BREAKERS FOR CONTROLLING FIXTURES.

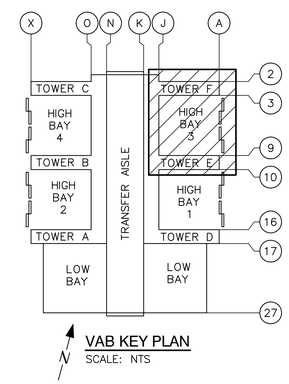

VAB KEY PLAN
SCALE: NTS

SYM	ZONE	DESCRIPTION	DATE	APPROVAL
		REVISIONS		

RS&H IMPROVING YOUR WORLD
Reynolds, Smith and Hills, Inc.
115 Alma Blvd, Suite 101
Merritt Island, Florida 32953-4101
(321) 453-0212 (321) 453-0223 FAX
www.rsandh.com

SIGNATURES		DATE
DRAWN:	JOSEPH HAUER	08-20-2013
CHECKED:	DANIEL VICEANT	08-20-2013
SUBMITTED: ARCH/ENG OF RECORD	KEVIN HARRIS	
ST OF LICENSURE: FL		
LICENSE NO:		
APPROVED:	JOHN KERCSMAR	
	MIKE HARTNETT	

NATIONAL AERONAUTICS AND SPACE ADMINISTRATION
JOHN F. KENNEDY SPACE CENTER, NASA
KENNEDY SPACE CENTER, FLORIDA

LAUNCH COMPLEX 39
VEHICLE ASSEMBLY BUILDING

MODIFY VEHICLE ASSEMBLY BUILDING HIGH BAY 3 FOR SLS – HOISTS LEVEL 34 – ELECTRICAL PLAN

FILE NO.	SIZE	DWG. NO.	REV
302-6058-043	E	79K39667	

PROJ. NO. PCN 99000.5 SHEET 36 OF

NOTICE -- WHEN GOVERNMENT DRAWINGS, SPECIFICATIONS, OR OTHER DATA ARE USED FOR ANY PURPOSE OTHER THAN IN CONNECTION WITH A DEFINITELY RELATED GOVERNMENT PROCUREMENT OPERATION, THE UNITED STATES GOVERNMENT THEREBY INCURS NO RESPONSIBILITY NOR ANY OBLIGATION WHATSOEVER; AND THE FACT THAT THE GOVERNMENT MAY HAVE FORMULATED, FURNISHED, OR IN ANY WAY SUPPLIED THE SAID DRAWINGS, SPECIFICATIONS OR ANY OTHER DATA IS NOT TO BE REGARDED BY IMPLICATION OR OTHERWISE IN ANY MANNER LICENSING THE HOLDER OR ANY OTHER PERSONS OR CORPORATION, OR CONVEYING ANY RIGHTS OR PERMISSION TO MANUFACTURE, USE, OR SELL ANY PATENTED INVENTION THAT IN ANY WAY BE RELATED THERETO.

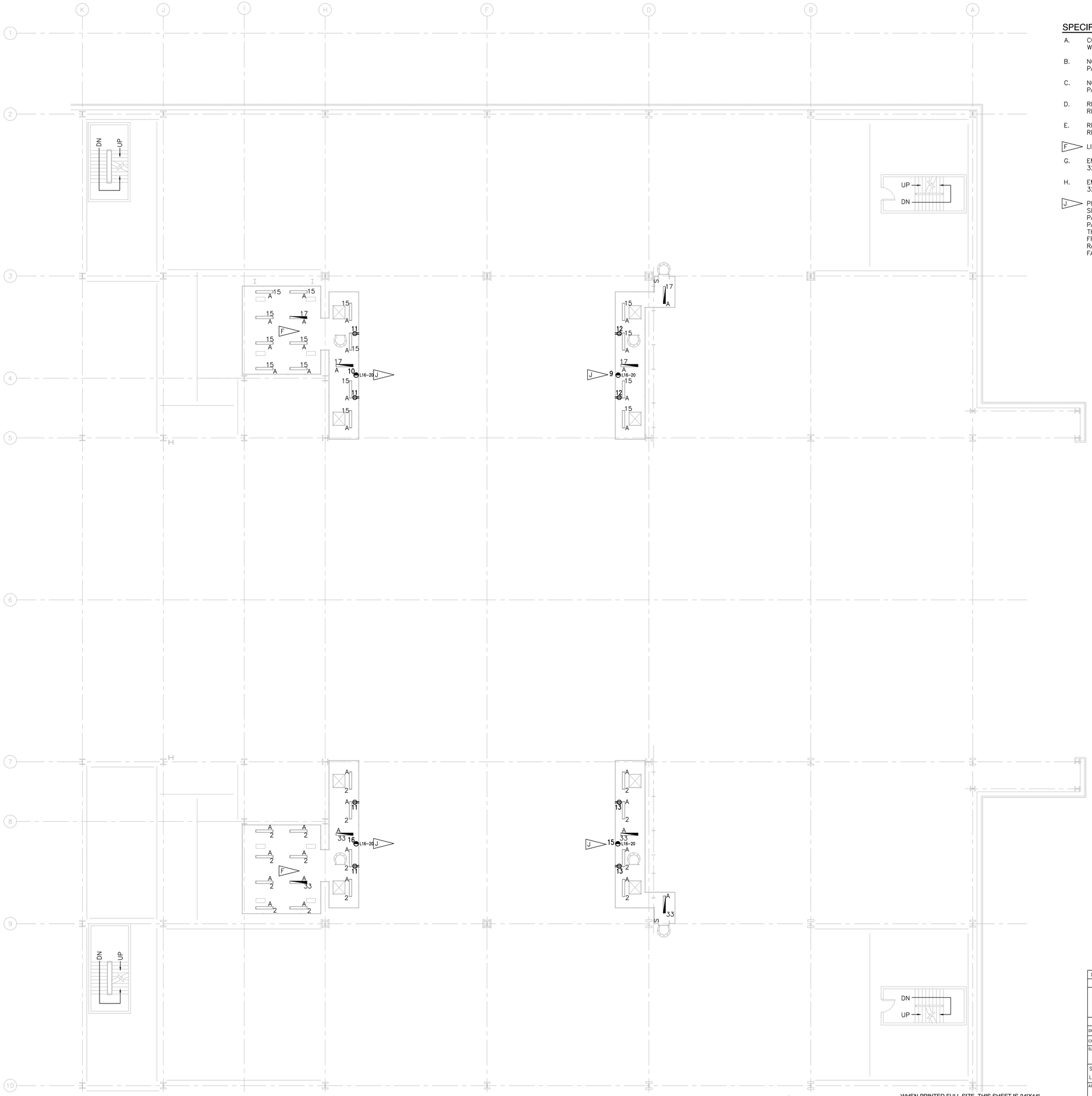

SPECIFIC NOTES:

A. COORDINATE MOUNTING LOCATION OF LIGHTING FIXTURES AND RECEPTACLES WITH HOIST EQUIPMENT MANUFACTURER AND EXISTING FACILITY STRUCTURE.

B. NON-EMERGENCY LUMINAIRES IN TOWER F RECEIVE POWER FROM EXISTING PANEL 32FLA. EXTEND EXISTING LOCAL CIRCUITS TO NEW DEVICES.

C. NON-EMERGENCY LUMINAIRES IN TOWER E RECEIVE POWER FROM EXISTING PANEL 36ELA. EXTEND EXISTING LOCAL CIRCUITS TO NEW DEVICES.

D. RECEPTACLES FOR PLATFORM HOIST MAINTENANCE PLATFORMS IN TOWER F RECEIVE POWER FROM PANEL 32FLB.

E. RECEPTACLES FOR PLATFORM HOIST MAINTENANCE PLATFORMS IN TOWER E RECEIVE POWER FROM PANEL 34ELB.

F. LIGHTING IN THIS AREA SWITCHED FROM LEVEL 36 ACCESS PLATFORM.

G. EMERGENCY LUMINAIRES IN TOWER F RECEIVE POWER FROM EXISTING PANEL 32FEB. EXTEND EXISTING LOCAL CIRCUITS TO NEW DEVICES.

H. EMERGENCY LUMINAIRES IN TOWER E RECEIVE POWER FROM EXISTING PANEL 32EEB. EXTEND EXISTING LOCAL CIRCUITS TO NEW DEVICES.

J. PROVIDE NEMA TYPE L16-20 RECEPTACLE TO SUPPLY POWER TO PORTABLE SLING HOIST. FOR RECEPTACLES IN TOWER F, POWER IS SUPPLIED FROM PANEL 36FPA. FOR RECEPTACLES IN TOWER E, POWER IS SUPPLIED FROM PANEL 36EPA. COORDINATE THE INSTALLATION OF PORTABLE SLING HOIST AT THESE (4) LOCATIONS. PROVIDE MULTI-CONDUCTOR FLEXIBLE POWER CABLE FROM HOIST CONTROLLER WITH ADEQUATE SLACK FOR THE HOISTS FULL RANGE OF MOTION. PROVIDE MATING L16-20 PLUG FOR CONNECTING TO FACILITY RECEPTACLE.

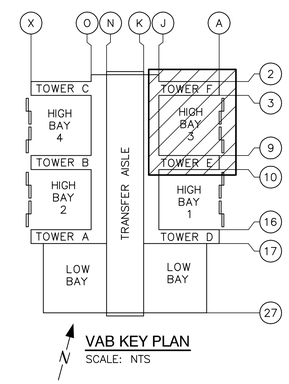

VAB KEY PLAN
SCALE: NTS

POWER AND SYSTEMS PLAN
SCALE: 1/8" = 1'-0"

4 2 0 4 8 12 16 20
1/8 IN = 1 FT

WHEN PRINTED FULL SIZE, THIS SHEET IS 34"X44"
THIS COMPUTER DRAWING WAS
CREATED IN AUTOCAD AND
FILED UNDER THE DRAWING NUMBER

E-135

SYM	ZONE	DESCRIPTION	DATE	APPROVAL
		REVISIONS		

RS&H IMPROVING YOUR WORLD
Reynolds, Smith and Hills, Inc.
115 Alma Blvd, Suite 101
Merritt Island, Florida 32953-4101
(321) 453-0212 (321) 453-0223 FAX
www.rsandh.com

SIGNATURES		DATE
DRAWN:	JOSEPH HAUER	08-20-2013
CHECKED:	DANIEL VICEANT	08-20-2013
SUBMITTED: ARCHENG OF RECORD	KEVIN HARRIS	
ST OF LICENSURE: FL		
LICENSE NO:		
APPROVED:	JOHN KERCSMAR	
	MIKE HARTNETT	

NATIONAL AERONAUTICS AND SPACE ADMINISTRATION
JOHN F. KENNEDY SPACE CENTER, NASA
KENNEDY SPACE CENTER, FLORIDA

LAUNCH COMPLEX 39
VEHICLE ASSEMBLY BUILDING

MODIFY VEHICLE ASSEMBLY BUILDING HIGH BAY 3 FOR SLS – HOISTS LEVEL 35 – ELECTRICAL PLAN

FILE NO.	SIZE	DWG. NO.	REV
302-6058-043	E	79K39667	

PROJ. NO. PCN 99000.5 SHEET 37 OF

NOTICE -- WHEN GOVERNMENT DRAWINGS, SPECIFICATIONS, OR OTHER DATA ARE USED FOR ANY PURPOSE OTHER THAN IN CONNECTION WITH A DEFINITELY RELATED GOVERNMENT PROCUREMENT OPERATION, THE UNITED STATES GOVERNMENT THEREBY INCURS NO RESPONSIBILITY NOR ANY OBLIGATION WHATSOEVER; AND THE FACT THAT THE GOVERNMENT MAY HAVE FORMULATED, FURNISHED, OR IN ANY WAY SUPPLIED THE SAID DRAWINGS, SPECIFICATIONS OR ANY OTHER DATA IS NOT TO BE REGARDED BY IMPLICATION OR OTHERWISE IN ANY MANNER LICENSING THE HOLDER OR ANY OTHER PERSONS OR CORPORATION, OR CONVEYING ANY RIGHTS OR PERMISSION TO MANUFACTURE, USE, OR SELL ANY PATENTED INVENTION THAT IN ANY WAY BE RELATED THERETO.

SPECIFIC NOTES:

A. SEE E-641 FOR PLATFORM HOIST ELEMENTARY CONTROLLER DIAGRAM AND TYPICAL OPERATOR CONSOLET ELEVATION. SEE SPECIFICATIONS 41 22 23.19 FOR REQUIRED EQUIPMENT PARAMETERS. COORDINATE LOCATION OF CONTROLLER WITH HOIST EQUIPMENT MANUFACTURER AND EXISTING FACILITY STRUCTURE.

B. NON-EMERGENCY LUMINAIRES IN TOWER F RECEIVE POWER FROM EXISTING PANEL 32FLA. EXTEND EXISTING LOCAL CIRCUITS TO NEW DEVICES.

C. NON-EMERGENCY LUMINAIRES IN TOWER E RECEIVE POWER FROM EXISTING PANEL 36ELA. EXTEND EXISTING LOCAL CIRCUITS TO NEW DEVICES.

D. LIGHTING IN THIS AREA SWITCHED FROM LEVEL 35 ACCESS PLATFORM.

E. EMERGENCY LUMINAIRES IN TOWER F RECEIVE POWER FROM EXISTING PANEL 32FEB. EXTEND EXISTING LOCAL CIRCUITS TO NEW DEVICES.

F. EMERGENCY LUMINAIRES IN TOWER E RECEIVE POWER FROM EXISTING PANEL 32EEB. EXTEND EXISTING LOCAL CIRCUITS TO NEW DEVICES.

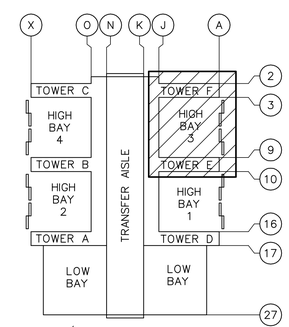

VAB KEY PLAN
SCALE: NTS

POWER AND SYSTEMS PLAN
SCALE: 1/8" = 1'-0"

4 2 0 4 8 12 16 20
1/8 IN = 1 FT

WHEN PRINTED FULL SIZE, THIS SHEET IS 34"X44"
THIS COMPUTER DRAWING WAS
CREATED IN AUTOCAD AND
FILED UNDER THE DRAWING NUMBER

E-136

SYM	ZONE	DESCRIPTION	DATE	APPROVAL
		REVISIONS		

RS&H IMPROVING YOUR WORLD
Reynolds, Smith and Hills, Inc.
115 Alma Blvd, Suite 101
Merritt Island, Florida 32953-4101
(321) 453-0212 (321) 453-0223 FAX
www.rsandh.com

SIGNATURES		DATE
DRAWN:	JOSEPH HAUER	08-20-2013
CHECKED:	DANIEL VICEANT	08-20-2013
SUBMITTED: ARCHENG OF RECORD	KEVIN HARRIS	
ST OF LICENSURE: FL		
LICENSE NO:		
APPROVED:	JOHN KERCSMAR	
	MIKE HARTNETT	

NATIONAL AERONAUTICS AND SPACE ADMINISTRATION
JOHN F. KENNEDY SPACE CENTER, NASA
KENNEDY SPACE CENTER, FLORIDA

LAUNCH COMPLEX 39
VEHICLE ASSEMBLY BUILDING

MODIFY VEHICLE ASSEMBLY BUILDING HIGH BAY 3 FOR SLS – HOISTS LEVEL 36 – ELECTRICAL PLAN

FILE NO.	SIZE	DWG. NO.	REV
302-6058-043	E	79K39667	

PROJ. NO. PCN 99000.5 SHEET 38 OF

NOTICE – WHEN GOVERNMENT DRAWINGS, SPECIFICATIONS, OR OTHER DATA ARE USED FOR ANY PURPOSE OTHER THAN IN CONNECTION WITH A DEFINITELY RELATED GOVERNMENT PROCUREMENT OPERATION, THE UNITED STATES GOVERNMENT THEREBY INCURS NO RESPONSIBILITY NOR ANY OBLIGATION WHATSOEVER; AND THE FACT THAT THE GOVERNMENT MAY HAVE FORMULATED, FURNISHED, OR IN ANY WAY SUPPLIED THE SAID DRAWINGS, SPECIFICATIONS OR ANY OTHER DATA IS NOT TO BE REGARDED BY IMPLICATION OR OTHERWISE IN ANY MANNER LICENSING THE HOLDER OR ANY OTHER PERSONS OR CORPORATION, OR CONVEYING ANY RIGHTS OR PERMISSION TO MANUFACTURE, USE, OR SELL ANY PATENTED INVENTION THAT IN ANY WAY BE RELATED THERETO.

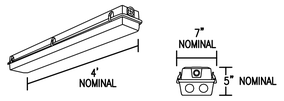

LUMINAIRE REQUIREMENTS:

1. HOUSING – ONE–PIECE, IMPACT–RESISTANT, FIBERGLASS REINFORCED POLYESTER WITH ENCLOSED COLD–ROLLED STEEL WIREWAY.
2. FINISH – STEEL REFLECTOR WITH MULTI–STAGE PHOSPHATE BONDING TREATMENT FINISHED WITH HIGH REFLECTANCE (MINIMUM 85%), BAKED WHITE ENAMEL FINISH.
3. LENS – 100% CLEAR ACRYLIC/DR OPTICAL DIFFUSER. STIPPLED INTERIOR SURFACES AND SMOOTH EXTERIOR. CLOSED CELL NEOPRENE GASKET WITH CAPTIVE NONMETALLIC, SNAP ACTION CAM LATCHES TO SECURE LENS TO HOUSING.
4. LAMPS – LINEAR FLUORESCENT T5, WITH (2) 28W LAMPS.
5. BALLAST – CLASS P, THERMALLY–PROTECTED, HIGH POWER FACTOR (.95), ELECTRONIC TYPE WITH SOUND RATING A. SEE SPECIFICATION OR LIGHTING FIXTURE SCHEDULE FOR BALLAST OPTIONS AND SPECIFICS.
6. CERTIFICATION – UL LISTED AND LABELED. SUITABLE FOR DAMP OR WET LOCATION AS DESIGNATED IN LIGHTING FIXTURE SCHEDULE.
7. INSTALLATION – SURFACE CEILING MOUNTING OR SUSPENDED MOUNTED AT 9'–0" AFF.

TYPE A: WET LOCATION INDUSTRIAL FLUORESCENT
SCALE:NTS

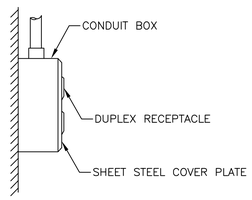

SIDE VIEW

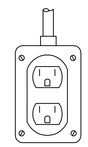

FRONT VIEW

TYPICAL RECEPTACLE SURFACE MOUNTING
SCALE:NTS

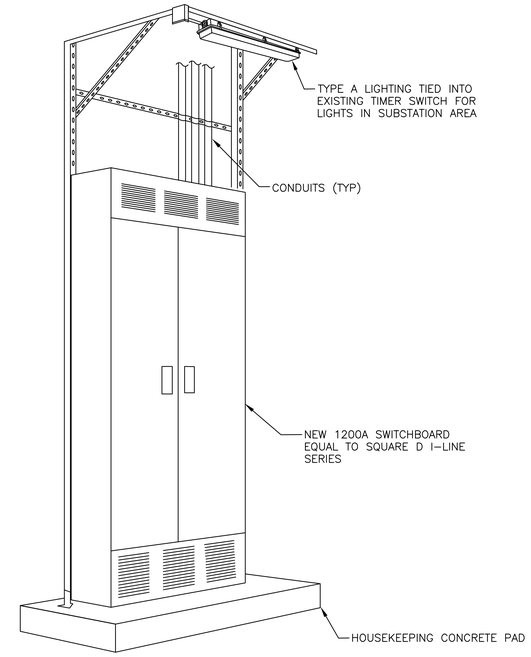

TYPICAL SWITCHBOARD MOUNTING DETAIL
SCALE:NTS

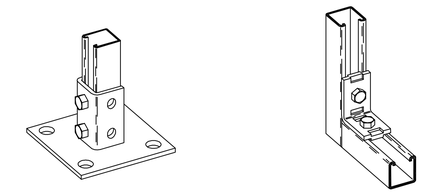

POST BASE FITTING

90 DEGREE ANGLE FITTING

TYPICAL STRUT SYSTEM FITTINGS
SCALE:NTS

WHEN PRINTED FULL SIZE, THIS SHEET IS 34"X44"
THIS COMPUTER DRAWING WAS
CREATED IN AUTOCAD AND
FILED UNDER THE DRAWING NUMBER

E–580

SYM	ZONE	DESCRIPTION	DATE	APPROVAL
		REVISIONS		

RS&H IMPROVING YOUR WORLD
Reynolds, Smith and Hills, Inc.
115 Alma Blvd, Suite 101
Merritt Island, Florida 32953-4101
(321) 453-0212 (321) 453-0223 FAX
www.rsandh.com

SIGNATURES		DATE
DRAWN:	JOSEPH HAUER	08-20-2013
CHECKED:	DANIEL VICEANT	08-20-2013
SUBMITTED: ARCH/ENG OF RECORD	KEVIN HARRIS	
ST OF LICENSURE: FL LICENSE NO:		
APPROVED:	JOHN KERCSMAR	
	MIKE HARTNETT	

NATIONAL AERONAUTICS AND SPACE ADMINISTRATION
JOHN F. KENNEDY SPACE CENTER, NASA
KENNEDY SPACE CENTER, FLORIDA

LAUNCH COMPLEX 39
VEHICLE ASSEMBLY BUILDING

MODIFY VEHICLE ASSEMBLY BUILDING HIGH BAY 3 FOR SLS – HOISTS ELECTRICAL DETAILS

FILE NO.	SIZE	DWG. NO.	REV
302-6058-043	E	79K39667	

PROJ. NO. PCN 99000.5 SHEET 39 OF

NOTICE -- WHEN GOVERNMENT DRAWINGS, SPECIFICATIONS, OR OTHER DATA ARE USED FOR ANY PURPOSE OTHER THAN IN CONNECTION WITH A DEFINITELY RELATED GOVERNMENT PROCUREMENT OPERATION, THE UNITED STATES GOVERNMENT THEREBY INCURS NO RESPONSIBILITY NOR ANY OBLIGATION WHATSOEVER; AND THE FACT THAT THE GOVERNMENT MAY HAVE FORMULATED, FURNISHED, OR IN ANY WAY SUPPLIED THE SAID DRAWINGS, SPECIFICATIONS OR ANY OTHER DATA IS NOT TO BE REGARDED BY IMPLICATION OR OTHERWISE IN ANY MANNER LICENSING THE HOLDER OR ANY OTHER PERSONS OR CORPORATION, OR CONVEYING ANY RIGHTS OR PERMISSION TO MANUFACTURE, USE, OR SELL ANY PATENTED INVENTION THAT IN ANY WAY BE RELATED THERETO.

SPECIFIC NOTES:

A. FOR CLARITY, NOT ALL DETAILS OF SS811 ARE SHOWN.

B. BOLD LINES AND TEXT INDICATE NEW WORK.

C. REPLACE EXISTING GENERAL ELECTRIC MICRO VERSA TRIP UNIT AND 300AMP SENSORS WITH GENERAL ELECTRIC ENTELLIGUARD TU CONVERSION KIT OR SIMILAR, ALLOWING FOR A 400AMP TRIP RATING OF EXISTING 600AMP FRAME POWER CIRCUIT BREAKER. COORDINATE WITH MANUFACTURER FOR REPLACEMENT COMPONENTS.

D. ADJUST EXISTING TRIP UNIT TO 200AMP.

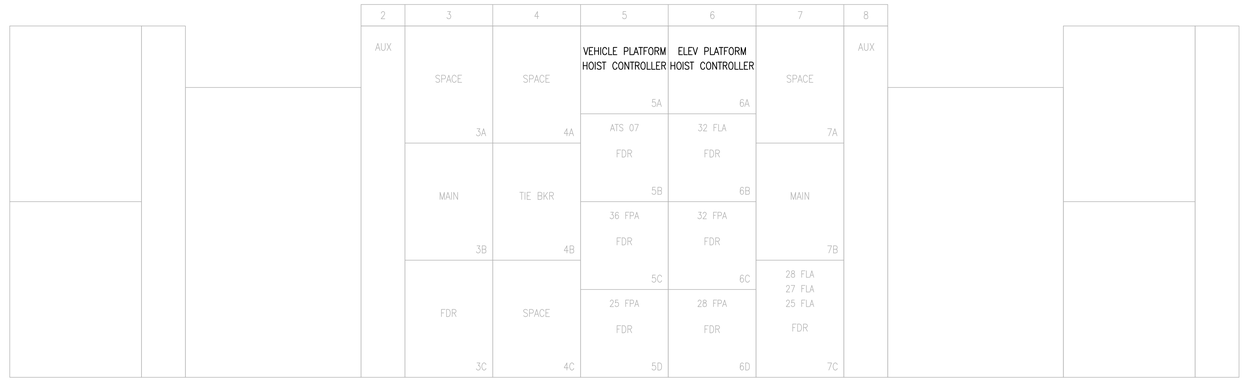

SS 811 ELEVATION

SCALE: NTS

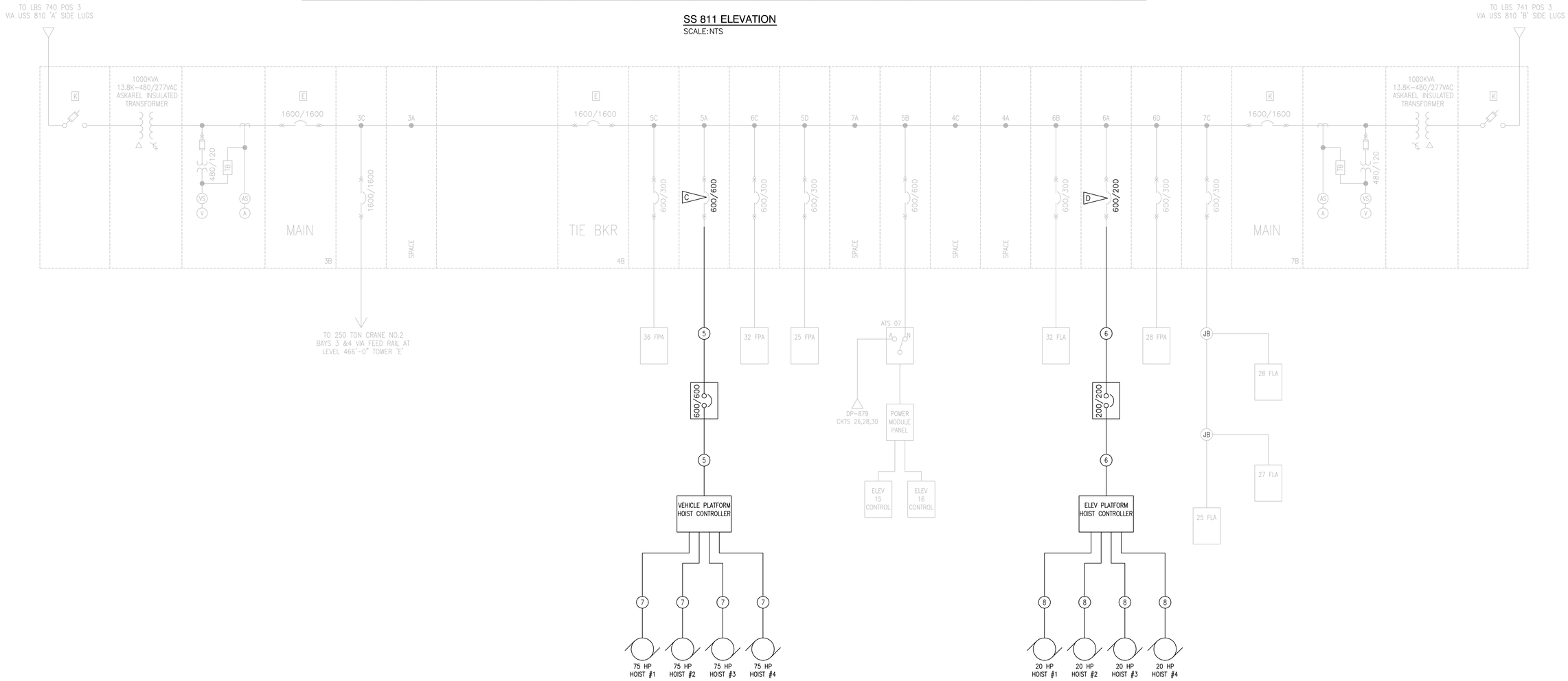

TOWER F - SS811 PARTIAL SINGLE-LINE DIAGRAM

SCALE: NTS

FEEDER SCHEDULE

FEEDER #	CABLING		SOURCE		LOAD		NOTES:
	TYPE	DESCRIPTION	CIRCUIT	LOCATION	DESCRIPTION	LOCATION	
1	THWN	2 SETS - (3) #350, (1) #1G IN 3"C	SWBD 32EPA1-22	FLOOR 32 - TOWER E	PLATFORM HOIST CONTROLLER	FLOOR 34 - TOWER E	
2	THWN	(3) #3/0, (1) #6G IN 2"C	SWBD 32EPA1-27	FLOOR 32 - TOWER E	ELEVATOR HOIST CONTROLLER	FLOOR 36 - TOWER E	
3	VFD RATED	(3) #1, (1) #6G IN 1-1/4"C	PLATFORM HOIST CONTROLLER	FLOOR 34 - TOWER E	PLATFORM HOIST MOTOR	FLOOR 34 - TOWER E	1
4	VFD RATED	(3) #6, (1) #10G IN 1"C	ELEVATOR HOIST CONTROLLER	FLOOR 36 - TOWER E	ELEVATOR HOIST MOTOR	FLOOR 36 - TOWER E	1
5	THWN	2 SETS - (3) #350, (1) #1G IN 3"C	SS811-5A	FLOOR 32 - TOWER F	PLATFORM HOIST CONTROLLER	FLOOR 32 - TOWER F	
6	THWN	(3) #3/0, (1) #6G IN 2"C	SS811-6A	FLOOR 32 - TOWER F	ELEVATOR HOIST CONTROLLER	FLOOR 36 - TOWER F	
7	VFD RATED	(3) #1, (1) #6G IN 1-1/4"C	PLATFORM HOIST CONTROLLER	FLOOR 32 - TOWER F	PLATFORM HOIST MOTOR	FLOOR 32 - TOWER F	1
8	VFD RATED	(3) #6, (1) #10G IN 1"C	ELEVATOR HOIST CONTROLLER	FLOOR 36 - TOWER F	ELEVATOR HOIST MOTOR	FLOOR 36 - TOWER F	1
9	THWN	4 SETS - (3)#350, (1) #3/0G IN 3"C	SS809-4A	FLOOR 32 - TOWER E	SWBD 32EPA1	FLOOR 32 - TOWER E	

NOTES:

1. PROVIDE RACEWAY SIZED FOR HOIST MANUFACTURER VFD MOTOR AND CONTROL CABLING.

WHEN PRINTED FULL SIZE, THIS SHEET IS 34"X44"
THIS COMPUTER DRAWING WAS
CREATED IN AUTOCAD AND
FILED UNDER THE DRAWING NUMBER

E-600

SYM	ZONE	DESCRIPTION	DATE	APPROVAL

REVISIONS

RS&H IMPROVING YOUR WORLD
Reynolds, Smith and Hills, Inc.
115 Alma Blvd, Suite 101
Merritt Island, Florida 32953-4101
(321) 453-0212 (321) 453-0223 FAX
www.rsandh.com

SIGNATURES		DATE
DRAWN:	JOSEPH HAUER	08-20-2013
CHECKED:	DANIEL VIGEANT	08-20-2013
SUBMITTED: ARCH/ENG OF RECORD	KEVIN HARRIS	
ST OF LICENSURE: FL LICENSE NO:		
APPROVED:	JOHN KERCSMAR	
	MIKE HARTNETT	

NATIONAL AERONAUTICS AND SPACE ADMINISTRATION
JOHN F. KENNEDY SPACE CENTER, NASA
KENNEDY SPACE CENTER, FLORIDA

LAUNCH COMPLEX 39
VEHICLE ASSEMBLY BUILDING

MODIFY VEHICLE ASSEMBLY BUILDING HIGH BAY 3 FOR SLS – HOISTS POWER ONE-LINE – DIAGRAM 1

FILE NO. 302-6058-043 | SIZE E | DWG. NO. 79K39667 | REV

PROJ. NO. PCN 99000.5 | SHEET 40 OF

NOTICE -- WHEN GOVERNMENT DRAWINGS, SPECIFICATIONS, OR OTHER DATA ARE USED FOR ANY PURPOSE OTHER THAN IN CONNECTION WITH A DEFINITELY RELATED GOVERNMENT PROCUREMENT OPERATION, THE UNITED STATES GOVERNMENT THEREBY INCURS NO RESPONSIBILITY NOR ANY OBLIGATION WHATSOEVER; AND THE FACT THAT THE GOVERNMENT MAY HAVE FORMULATED, FURNISHED, OR IN ANY WAY SUPPLIED THE SAID DRAWINGS, SPECIFICATIONS OR ANY OTHER DATA IS NOT TO BE REGARDED BY IMPLICATION OR OTHERWISE IN ANY MANNER LICENSING THE HOLDER OR ANY OTHER PERSONS OR CORPORATION, OR CONVEYING ANY RIGHTS OR PERMISSION TO MANUFACTURE, USE, OR SELL ANY PATENTED INVENTION THAT IN ANY WAY BE RELATED THERETO.

1	2	3	4	5	6	7	8	9	10
METERING A 1A	MTS #6 ELEV #11/12/17 2A	PANELS 31EPA/32EPA 3A	SWBD 32EPA1 C 4A	CTRL PWR SW 5A	PLC	MCC 41E1 MCC 41E2 7A	SPACE 8A	PANEL 41ELA 9A	METERING B 10A
MAIN BKR A 1B	PANELS 34EPA/36EPA 2B	PANELS 22EPA/24EPA 3B	SPACE 4B	TIE BKR 5B		PANELS 30ELA/31ELA 32ELA 7B	PANEL 28EPA 8B	PANELS 34ELA/36ELA 9B	MAIN BKR B 10B
CPT 1C	SPACE 2C	PANELS 25ELA/26ELA 27ELA/28ELA 3C	SPACE 4C	UPS 5C		MTS #5 ELEV #13/14 7C	PANEL 42E4 8C	PANELS 22ELA/24ELA 9C	CPT 10C
RECEPT CM-MAIN A 1D	SPACE 2D	SPACE 3D	SPACE 4D	SPACE 5D		PANEL BOARD 7D	PANELS 25EPA/27EPA 8D	SPACE 9D	RECEPT CM-MAIN B 10D

SS 809 ELEVATION

SCALE: NTS

SPECIFIC NOTES:

A. CONNECTION OF LOAD SHOWN FOR PLATFORM INTERFACE IS NOT IN CONTRACT. PROVIDE ALL BRANCH CIRCUIT BREAKERS AS SHOWN. WHERE LOADS ARE NOT CONNECTED, LABEL BREAKERS AS SPARE.

B. BOLD LINES AND TEXT INDICATE NEW WORK.

C. PROVIDE 1600AF SQUARE D MASTERPACT POWER CIRCUIT BREAKER TO BE INSTALLED IN EXISTING AVAILABLE SWITCHGEAR CELL 4A AS INDICATED. INCLUDE MICROLOGIC TRIP UNIT WITH POWER CIRCUIT BREAKER WITH ADJUSTABLE LSIG. AIC RATING TO BE PROVIDED TO MAINTAIN EXISTING EQUIPMENT RATING.

D. SEE SHEET E-600 FOR FEEDER SCHEDULE.

E. FOR CLARITY, NOT ALL DETAILS OF SS809 ARE SHOWN.

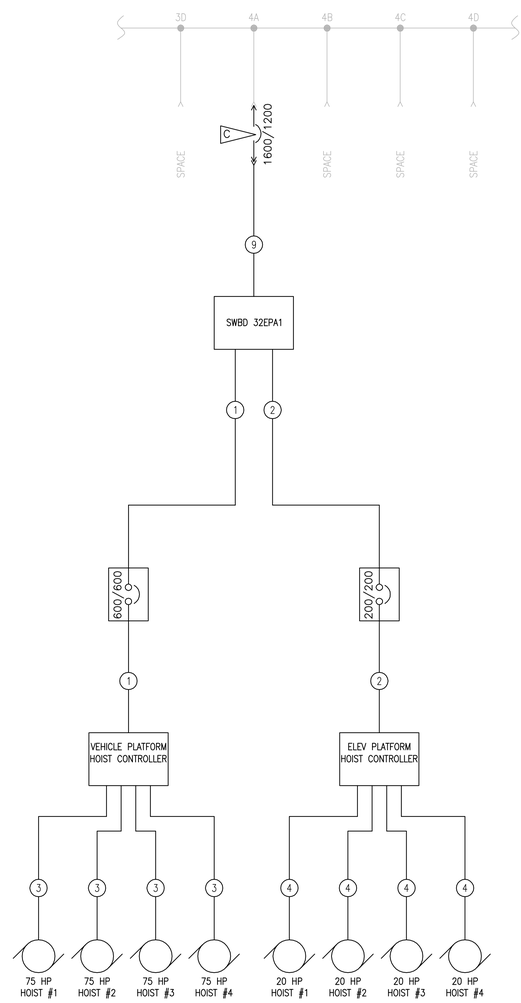

TOWER E - SS809 PARTIAL SINGLE-LINE DIAGRAM

SCALE: NTS

SWBD 32EPA1

480□ VOLTS — 3 PHASE
SURFACE MOUNT — 3 WIRE
1200 AMP BUS — 1200 MCB (TOP)

LOCATION: TOWER E - FLOOR 32
FED FROM: SS809-4A
ENCLOSURE: NEMA 1

CKT	TRIP	PHASE	NEUTRAL	GND	COND	DEMAND HVAC	DEMAND LGTS	DEMAND RECP	DEMAND GEN	KVA	NOTES	LOAD	A	B	C	LOAD	NOTES	KVA	DEMAND HVAC	DEMAND LGTS	DEMAND RECP	DEMAND GEN	COND	GND	NEUTRAL	PHASE	TRIP	CKT
1									X	17.1			X					17.1				X						2
3	200	#3/0	---	#6	2"				X	17.1	A	PLATFORM INTERFACE - FLOOR 32		X		PLATFORM INTERFACE - FLOOR 30	A	17.1				X	2"	#6	---	#3/0	200	4
5									X	17.1		(TOWER E)			X	(TOWER E)		17.1				X						6
7									X	17.1			X					17.1				X						8
9	200	#3/0	---	#6	2"				X	17.1	A	PLATFORM INTERFACE - FLOOR 28		X		PLATFORM INTERFACE - FLOOR 26	A	17.1				X	2"	#6	---	#3/0	200	10
11									X	17.1		(TOWER E)			X	(TOWER E)		17.1				X						12
13									X	17.1			X					17.1				X						14
15	200	#3/0	---	#6	2"				X	17.1	A	PLATFORM INTERFACE - FLOOR 24		X		PLATFORM INTERFACE - FLOOR 22	A	17.1				X	2"	#6	---	#3/0	200	16
17									X	17.1		(TOWER E)			X	(TOWER E)		17.1				X						18
19									X	17.1			X					96.0				X						20
21	200	#3/0	---	#6	2"				X	17.1	A	PLATFORM INTERFACE - FLOOR 20		X		PLATFORM HOIST CONTROLLER	1	96.0				X	3"	#1	---	(2)350	600	22
23									X	17.1		(TOWER E)			X	(TOWER E)		96.0				X						24
25									X	29.0			X															26
27	200	#3/0	---	#6	2"				X	29.0	1	ELEVATOR HOIST CONTROLLER		X														28
29									X	29.0		(TOWER E)			X													30
31													X															32
33														X														34
35															X													36
37													X															38
39														X		SURGE PROTECTION DEVICE							1"	#6	---	#6	60	40
41															X													42

Notes:
1 PROVIDED UNDER 79K39667

NEC 220.51	100%	EST DEMAND LOAD HVAC (KVA):	0.0	PHASE A CONNECTED LOAD (KVA):	244.7
NEC 220.42 for All others	100%	EST DEMAND LOAD LGTS (KVA):	0.0	PHASE B CONNECTED LOAD (KVA):	244.7
NEC 220.44 (0-10KVA@100%, X>10KVA@50%		EST DEMAND LOAD RECP (KVA):	0.0	PHASE C CONNECTED LOAD (KVA):	244.7
DEMAND FACTOR OF 50%	50%	EST DEMAND LOAD GEN (KVA):	367.1	TOTAL CONNECTED LOAD (KVA):	**734.1**
		TOTAL ESTIMATED DEMAND LOAD (KVA):	367.1	TOTAL CONNECTED LOAD (AMPS):	**883.0**

SYM	ZONE	DESCRIPTION	DATE	APPROVAL
		REVISIONS		

RS&H IMPROVING YOUR WORLD
Reynolds, Smith and Hills, Inc.
115 Alma Blvd, Suite 101
Merritt Island, Florida 32953-4101
(321) 453-0212 (321) 453-0223 FAX
www.rsandh.com

SIGNATURES		DATE
DRAWN:	JOSEPH HAUER	08-20-2013
CHECKED:	DANIEL VICEANT	08-20-2013
SUBMITTED: ARCHENG OF RECORD	KEVIN HARRIS	
ST OF LICENSURE: FL LICENSE NO:		
APPROVED:	JOHN KERCSMAR	
	MIKE HARTNETT	

NATIONAL AERONAUTICS AND SPACE ADMINISTRATION
JOHN F. KENNEDY SPACE CENTER, NASA
KENNEDY SPACE CENTER, FLORIDA

LAUNCH COMPLEX 39
VEHICLE ASSEMBLY BUILDING
MODIFY VEHICLE ASSEMBLY BUILDING
HIGH BAY 3 FOR SLS – HOISTS
POWER ONE-LINE – DIAGRAM 2

FILE NO. 302-6058-043 | SIZE E | DWG. NO. 79K39667 | REV

PROJ. NO. PCN 99000.5 | SHEET 41 OF

WHEN PRINTED FULL SIZE, THIS SHEET IS 34"X44"
THIS COMPUTER DRAWING WAS
CREATED IN AUTOCAD AND
FILED UNDER THE DRAWING NUMBER

E-601

NOTICE -- WHEN GOVERNMENT DRAWINGS, SPECIFICATIONS, OR OTHER DATA ARE USED FOR ANY PURPOSE OTHER THAN IN CONNECTION WITH A DEFINITELY RELATED GOVERNMENT PROCUREMENT OPERATION, THE UNITED STATES GOVERNMENT THEREBY INCURS NO RESPONSIBILITY NOR ANY OBLIGATION WHATSOEVER; AND THE FACT THAT THE GOVERNMENT MAY HAVE FORMULATED, FURNISHED, OR IN ANY WAY SUPPLIED THE SAID DRAWINGS, SPECIFICATIONS OR ANY OTHER DATA IS NOT TO BE REGARDED BY IMPLICATION OR OTHERWISE IN ANY MANNER LICENSING THE HOLDER OR ANY OTHER PERSONS OR CORPORATION, OR CONVEYING ANY RIGHTS OR PERMISSION TO MANUFACTURE, USE, OR SELL ANY PATENTED INVENTION THAT IN ANY WAY BE RELATED THERETO.

PANEL 36FPA

277/480 VOLTS, 3 PHASE, SURFACE MOUNT, 4 WIRE, 400 AMP BUS, 300 MCB (TOP)

AIC: 35,000A

LOCATION: TOWER F - ROOM 36F2 — FED FROM: USS-811 CKT 4A — ENCLOSURE: NEMA 1

CKT	TRIP	PHASE	NEUTRAL	GND	COND	DEMAND HVAC	DEMAND LGTS	DEMAND RECP	DEMAND GEN	KVA	NOTES	LOAD	A	B	C	LOAD	NOTES	KVA	DEMAND HVAC	DEMAND LGTS	DEMAND RECP	DEMAND GEN	COND	GND	NEUTRAL	PHASE	TRIP	CKT
1		#10							X				X															2
3	50	#10		#10	3/4"				X			15HP HOIST ELEV MACH ROOM 36FL		X		SPARE											15	4
5		#10							X						X													6
7		#12							X	1.3			X					1.3				X				#12		8
9	20	#12		#12	3/4"				X	1.3		EAST SLING HOIST RECEPTACLE (L16-20 TWIST LOCK) LVL 35		X		WEST SLING HOIST RECEPTACLE (L16-20 TWIST LOCK) LVL 35		1.3				X	3/4"	#12		#12	20	10
11		#12							X	1.3					X			1.3				X				#12		12
13													X															14
15												SPACE		X		SPACE												16
17															X													18
19													X															20
21												SPACE		X		SPACE												22
23															X													24
25													X															26
27												SPACE		X		SPACE												28
29															X													30
31													X															32
33												SPACE		X		SPACE												34
35															X													36
37													X															38
39												SPACE		X		SPACE												40
41															X													42

Notes:
1. PANEL 36FPA PROVIDED UNDER #79K39289.

NEC 220.51	100%	EST DEMAND LOAD HVAC (KVA):	0.0	PHASE A CONNECTED LOAD (KVA):	2.7
NEC 220.42 for All others	100%	EST DEMAND LOAD LGTS (KVA):	0.0	PHASE B CONNECTED LOAD (KVA):	2.7
NEC 220.44 (0-10KVA@100%, X>10KVA@50%		EST DEMAND LOAD RECP (KVA):	0.0	PHASE C CONNECTED LOAD (KVA):	2.7
NEC 220.14	100%	EST DEMAND LOAD GEN (KVA):	8.0	TOTAL CONNECTED LOAD (KVA):	**8.0**
		TOTAL ESTIMATED DEMAND LOAD (KVA):	8.0	TOTAL CONNECTED LOAD (AMPS):	**9.6**

PANEL 32EEB

120/208 VOLTS, 3 PHASE, SURFACE MOUNT, 4 WIRE, 225 AMP BUS, 200 MCB (BOTTOM)

GE NLAB

LOCATION: TOWER E - 32ND FL — FED FROM: ESS-879 CKT 9 — ENCLOSURE: NEMA 1

CKT	TRIP	PHASE	NEUTRAL	GND	COND	DEMAND HVAC	DEMAND LGTS	DEMAND RECP	DEMAND GEN	KVA	NOTES	LOAD	A	B	C	LOAD	NOTES	KVA	DEMAND HVAC	DEMAND LGTS	DEMAND RECP	DEMAND GEN	COND	GND	NEUTRAL	PHASE	TRIP	CKT
1	20	#12	#12		3/4"		X					LTG-E STAIRS FL 20-31	X			LTG-W STAIRS FL 20-31				X			3/4"		#12	#12	20	2
3	20	#12	#12		3/4"		X					LTG-W STAIRS, EXIT FL 20-41		X		LTG-E STAIRS, EXIT FL 20-31				X			3/4"		#12	#12	20	4
5	20	#12	#12		3/4"		X					LTG-W STAIRS FL 20-30			X	LTG-E STAIRS FL 19-31				X			3/4"		#12	#12	20	6
7	20	#12	#12		3/4"		X					LTG-W STAIRS FL 32-42	X			LTG-E STAIRS FL 32-42				X			3/4"		#12	#12	20	8
9	20	#12	#12		3/4"		X					LTG-W STAIRS FL 32-41		X		LTG-E STAIRS FL32-40				X			3/4"		#12	#12	20	10
11	20	#12	#12		3/4"		X					LTG-W STAIRS, EXIT FL 32			X	LTG-E STAIRS, EXIT FL 32-41				X			3/4"		#12	#12	20	12
13	20	#12	#12		3/4"		X					LTG-CATWALK EXT PLAT A FL 2	X			LTG-CATWALK EXT PLAT A FL 2				X			3/4"		#12	#12	20	14
15	20	#12	#12		3/4"		X					LTG-CATWALK EXT PLAT B FL 2		X		LTG-CATWALK EXT PLAT B FL 2				X			3/4"		#12	#12	20	16
17	20	#12	#12	#12	3/4"			X		0.7		RECPT-SUBSTA AND HOIST AREA			X	LTG-MACH RM, ELEV 17 PH				X			3/4"		#12	#12	20	18
19	20	#12	#12		1/2"			X				RECPT-SUBSTA AREA	X			PA-BASE RM 28E1 NET A						X	1/2"		#12	#12	20	20
21	20											SPARE		X		PA-BASE RM 24E1 NET A						X	1/2"		#12	#12	20	22
23	20	#12	#12		3/4"		X					LTG-EMER FL 37			X	LTG-CATWALK EXT PLAT C FL 2				X			3/4"		#12	#12	20	24
25	20	#12	#12		1-1/2"		X					LTG-EMER SUBSTA AREA	X			FA-I J-BOX						X	1-1/4"		#10	#10	20	26
27	20	#10	#10		1-1/4"				X			FA-BOX 3 FL 32		X		FA-BOX 1 FL 32						X	1-1/4"		#10	#10	20	28
29	20	#10	#10		1-1/4"				X			FA-BOX 3 FL 32			X	FA-BOX 1 FL 32						X	1-1/4"		#10	#10	20	30
31	20											SPARE	X			SPARE											20	32
33	20	#10	#10	#10	3/4"		X			0.5		EM LTG HOIST MAINT PLATFORMS		X		SPARE											20	34
35												SPACE			X	SPARE											20	36
37												SPACE	X			SPARE											20	38
39												SPACE		X		SPARE											20	40
41												SPACE			X	SPARE											20	42

Notes:

NEC 220.51	100%	EST DEMAND LOAD HVAC (KVA):	0.0	PHASE A CONNECTED LOAD (KVA):	0.0
NEC 220.42 for All others	100%	EST DEMAND LOAD LGTS (KVA):	0.5	PHASE B CONNECTED LOAD (KVA):	0.5
NEC 220.44 (0-10KVA@100%, X>10KVA@50%		EST DEMAND LOAD RECP (KVA):	0.7	PHASE C CONNECTED LOAD (KVA):	0.7
NEC 220.14	100%	EST DEMAND LOAD GEN (KVA):	0.0	TOTAL CONNECTED LOAD (KVA):	**1.2**
		TOTAL ESTIMATED DEMAND LOAD (KVA):	1.2	TOTAL CONNECTED LOAD (AMPS):	**3.4**

PANEL 32FLB

120/208 VOLTS, 3 PHASE, SURFACE MOUNT, 4 WIRE, 225 AMP BUS, 200 MCB (BOTTOM)

LOCATION: TOWER F - RM 32F2 VAB — FED FROM: 32FPA CKT 9 — ENCLOSURE: NEMA 1

CKT	TRIP	PHASE	NEUTRAL	GND	COND	DEMAND HVAC	DEMAND LGTS	DEMAND RECP	DEMAND GEN	KVA	NOTES	LOAD	A	B	C	LOAD	NOTES	KVA	DEMAND HVAC	DEMAND LGTS	DEMAND RECP	DEMAND GEN	COND	GND	NEUTRAL	PHASE	TRIP	CKT
1	20	#12	#12	#12	1/2"		X					LTG-RM 28FL AND UTIL SHAFT	X			SPARE											20	2
3	20	#12	#12	#12	1/2"			X				RECPT-RM 32F1		X		RECPT-CLEANING, 120V					X		3/4"	#12	#10	#10	20	4
5	20	#12	#12	#12	3/4"		X					LTG-CATWALK, 31F1			X	RECPT-CLEANING, 208V					X		3/4"	#12		#10	20	6
7	20	#12	#12	#12	3/4"			X				RECPT-CATWALK, 31F1	X								X					#10		8
9	20	#12	#12	#12	3/4"			X				RECPT-MOVABLE PLATFORM		X		SPARE											20	10
11	20	#10	#10	#10	3/4"			X		0.4		RECPT - HOIST MAINT PLAT - WEST			X	RECPT - HOIST MAINT PLAT - EAST		0.4			X		3/4"	#10	#10	#10	20	12
13												SPACE	X			SPACE												14
15												SPACE		X		SPACE												16
17												SPACE			X	SPACE												18
19												SPACE	X			SPACE												20
21												SPACE		X		SPACE												22
23												SPACE			X	SPACE												24
25												SPACE	X			SPACE												26
27												SPACE		X		SPACE												28
29												SPACE			X	SPACE												30
31												SPACE	X			SPACE												32
33												SPACE		X		SPACE												34
35												SPACE			X	SPACE												36
37												SPACE	X			SPACE												38
39												SPACE		X		SPACE												40
41												SPACE			X	SPACE												42

Notes:

NEC 220.51	100%	EST DEMAND LOAD HVAC (KVA):	0.0	PHASE A CONNECTED LOAD (KVA):	0.0
NEC 220.42 for All others	100%	EST DEMAND LOAD LGTS (KVA):	0.0	PHASE B CONNECTED LOAD (KVA):	0.0
NEC 220.44 (0-10KVA@100%, X>10KVA@50%		EST DEMAND LOAD RECP (KVA):	0.7	PHASE C CONNECTED LOAD (KVA):	0.7
NEC 220.14	100%	EST DEMAND LOAD GEN (KVA):	0.0	TOTAL CONNECTED LOAD (KVA):	**0.7**
		TOTAL ESTIMATED DEMAND LOAD (KVA):	0.7	TOTAL CONNECTED LOAD (AMPS):	**2.0**

PANEL 34ELB

120/208 VOLTS, 3 PHASE, SURFACE MOUNT, 4 WIRE, 225 AMP BUS, 200 MCB (BOTTOM)

GE NLAB

LOCATION: TOWER E - ELEC CLOSET 34TH FL — FED FROM: PNL 31EPA CKT 16 — ENCLOSURE: NEMA 1

CKT	TRIP	PHASE	NEUTRAL	GND	COND	DEMAND HVAC	DEMAND LGTS	DEMAND RECP	DEMAND GEN	KVA	NOTES	LOAD	A	B	C	LOAD	NOTES	KVA	DEMAND HVAC	DEMAND LGTS	DEMAND RECP	DEMAND GEN	COND	GND	NEUTRAL	PHASE	TRIP	CKT
1	20	#12	#12	#12	1/2"		X					LTG-CATWALK S	X			LTG-CATWALK N				X			3/4"	#12	#12	#12	20	2
3	20	#12	#12	#12	3/4"		X					LTG-CATWALK & UTILITY		X		LTG-CATWALK NO. 1				X			3/4"	#12	#12	#12	20	4
5	20	#12	#12	#12	3/4"			X				RECPT-PLATFORM			X	RECPT-PLATFORM					X		3/4"	#12	#12	#12	20	6
7	20	#12	#12	#12	3/4"			X				RECPT-PLATFORM	X			RECPT-CLEANING, ELEV LOBBY					X		3/4"	#12	#12	#12	20	8
9	20	#12	#12	#12	3/4"			X				RECPT-CATWALK TO TOWER B		X		RECPT-CLEANING, ELEV LOBBY					X		3/4"	#12		#12	20	10
11	20	#10	#10	#10	3/4"			X		0.4		RECPT - HOIST MAINT PLAT - WEST			X						X					#12		12
13	20	#10	#10	#10	3/4"			X		0.4		RECPT - HOIST MAINT PLAT - EAST	X			SPARE											20	14
15												SPACE		X		SPACE												16
17												SPACE			X	SPACE												18

Notes:

NEC 220.51	100%	EST DEMAND LOAD HVAC (KVA):	0.0	PHASE A CONNECTED LOAD (KVA):	0.4
NEC 220.42 for All others	100%	EST DEMAND LOAD LGTS (KVA):	0.0	PHASE B CONNECTED LOAD (KVA):	0.0
NEC 220.44 (0-10KVA@100%, X>10KVA@50%		EST DEMAND LOAD RECP (KVA):	0.7	PHASE C CONNECTED LOAD (KVA):	0.4
NEC 220.14	100%	EST DEMAND LOAD GEN (KVA):	0.0	TOTAL CONNECTED LOAD (KVA):	**0.7**
		TOTAL ESTIMATED DEMAND LOAD (KVA):	0.7	TOTAL CONNECTED LOAD (AMPS):	**2.0**

PANEL 36EPA

277/480 VOLTS, 3 PHASE, SURFACE MOUNT, 4 WIRE, 200 AMP BUS, 200 MCB (TOP)

AIC: 18,000A SQUARE D NF

LOCATION: TOWER E - 36TH FL — FED FROM: SS-809 CKT 2B — ENCLOSURE: NEMA 1

CKT	TRIP	PHASE	NEUTRAL	GND	COND	DEMAND HVAC	DEMAND LGTS	DEMAND RECP	DEMAND GEN	KVA	NOTES	LOAD	A	B	C	LOAD	NOTES	KVA	DEMAND HVAC	DEMAND LGTS	DEMAND RECP	DEMAND GEN	COND	GND	NEUTRAL	PHASE	TRIP	CKT
1													X															2
3	50										1	SPARE		X		SPARE	1										50	4
5															X													6
7		#10							X													X						8
9	20	#10		#12	1-1/4"				X		1	WATER PUMP 40TH FLOOR				WELDER	1					X					50	10
11		#10							X													X						12
13		#12							X	1.3			X					1.3				X				#12		14
15	20	#12		#12	3/4"				X	1.3		EAST SLING HOIST RECEPTACLE (L16-20 TWIST LOCK) LVL 35		X		WEST SLING HOIST RECEPTACLE (L16-20 TWIST LOCK) LVL 35		1.3				X	3/4"	#12		#12	20	16
17		#12							X	1.3					X			1.3				X				#12		18
19													X															20
21												SPACE		X		SPACE												22
23															X													24
25													X															26
27												SPACE		X		SPACE												28
29															X													30

Notes:
1. CIRCUITING PER 39K6150009, REV M.

NEC 220.51	100%	EST DEMAND LOAD HVAC (KVA):	0.0	PHASE A CONNECTED LOAD (KVA):	2.7
NEC 220.42 for All others	100%	EST DEMAND LOAD LGTS (KVA):	0.0	PHASE B CONNECTED LOAD (KVA):	2.7
NEC 220.44 (0-10KVA@100%, X>10KVA@50%		EST DEMAND LOAD RECP (KVA):	0.0	PHASE C CONNECTED LOAD (KVA):	2.7
NEC 220.14	100%	EST DEMAND LOAD GEN (KVA):	8.0	TOTAL CONNECTED LOAD (KVA):	**8.0**
		TOTAL ESTIMATED DEMAND LOAD (KVA):	8.0	TOTAL CONNECTED LOAD (AMPS):	**9.6**

PANEL 32FLA

277/480 VOLTS, 3 PHASE, SURFACE MOUNT, 4 WIRE, 225 AMP BUS, 200 MCB (BOTTOM)

GE QMR2-CCB

LOCATION: TOWER F - CORRIDOR 32ND FLOOR — FED FROM: USS-811 CKT 4D — ENCLOSURE: NEMA 1

CKT	TRIP	PHASE	NEUTRAL	GND	COND	DEMAND HVAC	DEMAND LGTS	DEMAND RECP	DEMAND GEN	KVA	NOTES	LOAD	A	B	C	LOAD	NOTES	KVA	DEMAND HVAC	DEMAND LGTS	DEMAND RECP	DEMAND GEN	COND	GND	NEUTRAL	PHASE	TRIP	CKT
1	20	#12	#12	#12	3/4"		X					LTG-FL 32 LOBBY, CORRIDOR	X			LTG-FL 32 EAST END TOWER				X			1/2"	#12	#12	#12	20	2
3	20	#12	#12	#12	3/4"		X					LTG-FL 32 SUBSTATION		X		LTG-FL 32 EAST END TOWER				X			1/2"	#12	#12	#12	20	4
5	20	#12	#12	#12	3/4"		X					LTG-FL 32 SUBSTATION			X	LTG-FL 36 ELEV LOBBY				X			1/2"	#12	#12	#12	20	6
7	20	#12	#12	#12	3/4"		X					LTG-FL 31 EAST END TOWER	X			LTG-FL 34 EAST END TOWER				X			3/4"	#12	#12	#12	20	8
9	20	#12	#12	#12	3/4"		X					LTG-FL 31 ELEV LOBBY		X		LTG-FL 34 ELEV LOBBY				X			1/2"	#12	#12	#12	20	10
11	20	#12	#12	#12	1/2"		X					LTG-FL 37 ELEV LOBBY			X	LTG-FL 33 ELEV LOBBY & CORR				X			3/4"	#12	#12	#12	20	12
13	20	#12	#12	#12	3/4"		X					LTG-FL 37 EAST END TOWER	X			SPARE											20	14
15	20	#10	#10	#10	3/4"		X			1.1		LTG-FL 35&36 HOIST MAINT PLATS		X		SPARE											20	16
17	20											SPARE			X	SPARE											20	18
19												SPACE	X			SPACE												20
21												SPACE		X		SPACE												22
23												SPACE			X	SPACE												24
25												SPACE	X			SPACE												26
27												SPACE		X		SPACE												28
29												SPACE			X	SPACE												30

Notes:

NEC 220.51	100%	EST DEMAND LOAD HVAC (KVA):	0.0	PHASE A CONNECTED LOAD (KVA):	0.0
NEC 220.42 for All others	100%	EST DEMAND LOAD LGTS (KVA):	1.1	PHASE B CONNECTED LOAD (KVA):	1.1
NEC 220.44 (0-10KVA@100%, X>10KVA@50%		EST DEMAND LOAD RECP (KVA):	0.0	PHASE C CONNECTED LOAD (KVA):	0.0
NEC 220.14	100%	EST DEMAND LOAD GEN (KVA):	0.0	TOTAL CONNECTED LOAD (KVA):	**1.1**
		TOTAL ESTIMATED DEMAND LOAD (KVA):	1.1	TOTAL CONNECTED LOAD (AMPS):	**1.3**

PANEL 32FEB

120/208 VOLTS, 3 PHASE, SURFACE MOUNT, 4 WIRE, 225 AMP BUS, 200 MCB (BOTTOM)

GE NLAB

LOCATION: TOWER F - SUBSTA AREA 32ND FL — FED FROM: USS-884 CKT 9 — ENCLOSURE: NEMA 1

CKT	TRIP	PHASE	NEUTRAL	GND	COND	DEMAND HVAC	DEMAND LGTS	DEMAND RECP	DEMAND GEN	KVA	NOTES	LOAD	A	B	C	LOAD	NOTES	KVA	DEMAND HVAC	DEMAND LGTS	DEMAND RECP	DEMAND GEN	COND	GND	NEUTRAL	PHASE	TRIP	CKT
1	20	#12	#12		3/4"		X					LTG-W STAIRS FL 20,30	X			LTG-E STAIRS FL 32,34,40,EXIT				X			3/4"		#12	#12	20	2
3	20	#12	#12		3/4"		X					LTG-W STAIRS FL 22,26,27,28		X		LTG-E STAIRS FL 33,42				X			3/4"		#12	#12	20	4
5	20	#12	#12		3/4"		X					LTG-W STAIRS FL 20,30			X	LTG-E STAIRS FL 20,30				X			3/4"		#12	#12	20	6
7	20	#12	#12		3/4"		X					LTG-W STAIRS FL 31,41	X			LTG-E STAIRS FL 31,41				X			3/4"		#12	#12	20	8
9	20	#12	#12		3/4"		X					LTG-W STAIRS FL 31,41		X		LTG-E STAIRS FL 22,25,32,EXIT				X			3/4"		#12	#12	20	10
11	20	#12	#12		3/4"		X					LTG-W STAIRS FL 32,34,36,37,40			X	LTG-EXIT FL 21,31,32				X			3/4"		#12	#12	20	12
13	20	#12	#12		3/4"		X					LTG-EXTEND PLATFORM 27LB	X			RECPT-SUBSTA AND HOIST AREA		0.4			X		3/4"	#12	#12	#12	20	14
15	20	#12	#12		3/4"		X					LGT-ELEV #15 CAB VIA J-BOX		X		RECPT-SUBSTA AREA					X		3/4"		#12	#12	20	16
17	20	#10	#10	#10	3/4"		X			0.5		EM LTG HOIST MAINT PLATS			X	SPARE											20	18
19	20	#12	#12		3/4"		X					LTG-EXTEND PLATFORM 27LB	X			LTG-EMERG SUBSTA 811				X			3/4"		#12	#12	20	20
21	20	#12	#12		3/4"		X					LTG-EXTEND PLATFORM 25LB		X		SPARE											20	22
23	20											SPARE			X	SPACE												24

Notes:

NEC 220.51	100%	EST DEMAND LOAD HVAC (KVA):	0.0	PHASE A CONNECTED LOAD (KVA):	0.4
NEC 220.42 for All others	100%	EST DEMAND LOAD LGTS (KVA):	0.5	PHASE B CONNECTED LOAD (KVA):	0.0
NEC 220.44 (0-10KVA@100%, X>10KVA@50%		EST DEMAND LOAD RECP (KVA):	0.4	PHASE C CONNECTED LOAD (KVA):	0.5
NEC 220.14	100%	EST DEMAND LOAD GEN (KVA):	0.0	TOTAL CONNECTED LOAD (KVA):	**0.9**
		TOTAL ESTIMATED DEMAND LOAD (KVA):	0.9	TOTAL CONNECTED LOAD (AMPS):	**2.4**

PANEL 36ELA

277/480 VOLTS, 3 PHASE, SURFACE MOUNT, 4 WIRE, 200 AMP BUS, 200 MCB (BOTTOM)

AIC: 18,000A SQUARE D NF

LOCATION: TOWER E - 36TH FL — FED FROM: USS-809 CKT 9B — ENCLOSURE: NEMA 1

CKT	TRIP	PHASE	NEUTRAL	GND	COND	DEMAND HVAC	DEMAND LGTS	DEMAND RECP	DEMAND GEN	KVA	NOTES	LOAD	A	B	C	LOAD	NOTES	KVA	DEMAND HVAC	DEMAND LGTS	DEMAND RECP	DEMAND GEN	COND	GND	NEUTRAL	PHASE	TRIP	CKT
1	20	#12	#12	#12	3/4"		X					LTG-CATWALK, N & SE WALL, FL37	X			LTG-FL 35&36 HOIST MAINT PLATS		1.1		X			3/4"	#10	#10	#10	20	2
3	20	#12	#12	#12	1/2"		X					FLDT, E SLAB, FL 37		X		LTG-CORRIDOR 37TH FLOOR				X			1/2"	#12	#12	#12	20	4
5	20											SPARE			X	LTG-CORR CATWALK-TWR B FL 40				X			1/2"	#12	#12	#12	20	6
7	20	#12	#12	#12	1/2"		X					SPARE CKT-SUB ROOF	X			SPARE											20	8
9	20	#12	#12	#12	1/2"		X					SPARE CKT-SUB ROOF		X		LTG-CORR 36TH FLOOR				X			1/2"	#12	#12	#12	20	10
11	20											SPARE			X	SPARE											20	12
13												SPACE	X			SPACE												14
15												SPACE		X		SPACE												16
17												SPACE			X	SPACE												18
19												SPACE	X			SPACE												20
21												SPACE		X		SPACE												22
23												SPACE			X	SPACE												24
25												SPACE	X			SPACE												26
27												SPACE		X		SPACE												28
29												SPACE			X	SPACE												30

Notes:

NEC 220.51	100%	EST DEMAND LOAD HVAC (KVA):	0.0	PHASE A CONNECTED LOAD (KVA):	1.1
NEC 220.42 for All others	100%	EST DEMAND LOAD LGTS (KVA):	1.1	PHASE B CONNECTED LOAD (KVA):	0.0
NEC 220.44 (0-10KVA@100%, X>10KVA@50%		EST DEMAND LOAD RECP (KVA):	0.0	PHASE C CONNECTED LOAD (KVA):	0.0
NEC 220.14	100%	EST DEMAND LOAD GEN (KVA):	0.0	TOTAL CONNECTED LOAD (KVA):	**1.1**
		TOTAL ESTIMATED DEMAND LOAD (KVA):	1.1	TOTAL CONNECTED LOAD (AMPS):	**1.3**

SPECIFIC NOTES:

A. ALL PANELS THIS SHEET ARE EXISTING. FOR EXISTING PANELS, LOADS BEING MODIFIED UNDER THIS EFFORT HAVE A CONNECTED LOAD VALUE IN THE KVA COLUMN, AS SHOWN IN THE SCHEDULES. ALL LOADS WITH KVA SHOW, REQUIRES THE INSTALLATION OF NEW BREAKERS, CONDUIT AND WIRING AS INDICATED.

PANEL INDEX	
36FPA	36EPA
32EEB	32FLA
32FLB	32FEB
34ELB	36ELA

WHEN PRINTED FULL SIZE, THIS SHEET IS 34"X44"
THIS COMPUTER DRAWING WAS
CREATED IN AUTOCAD AND
FILED UNDER THE DRAWING NUMBER

E–602

SYM	ZONE	DESCRIPTION	DATE	APPROVAL
		REVISIONS		

RS&H IMPROVING YOUR WORLD
Reynolds, Smith and Hills, Inc.
115 Alma Blvd, Suite 101
Merritt Island, Florida 32953-4101
(321) 453-0212 (321) 453-0223 FAX
www.rsandh.com

SIGNATURES		DATE
DRAWN:	JOSEPH HAUER	08-20-2013
CHECKED:	DANIEL VIGEANT	08-20-2013
SUBMITTED: ARCH/ENG OF RECORD:	KEVIN HARRIS	
ST OF LICENSURE:	FL	
LICENSE NO:		
APPROVED:	JOHN KERCSMAR	
	MIKE HARTNETT	

NATIONAL AERONAUTICS AND SPACE ADMINISTRATION
JOHN F. KENNEDY SPACE CENTER, NASA
KENNEDY SPACE CENTER, FLORIDA

LAUNCH COMPLEX 39
VEHICLE ASSEMBLY BUILDING

MODIFY VEHICLE ASSEMBLY BUILDING HIGH BAY 3 FOR SLS – HOISTS ELECTRICAL SCHEDULES

FILE NO.	SIZE	DWG. NO.	REV
302-6058-043	E	79K39667	

PROJ. NO. PCN 99000.5 — SHEET 42 OF

NOTICE -- WHEN GOVERNMENT DRAWINGS, SPECIFICATIONS, OR OTHER DATA ARE USED FOR ANY PURPOSE OTHER THAN IN CONNECTION WITH A DEFINITELY RELATED GOVERNMENT PROCUREMENT OPERATION, THE UNITED STATES GOVERNMENT THEREBY INCURS NO RESPONSIBILITY NOR ANY OBLIGATION WHATSOEVER; AND THE FACT THAT THE GOVERNMENT MAY HAVE FORMULATED, FURNISHED, OR IN ANY WAY SUPPLIED THE SAID DRAWINGS, SPECIFICATIONS OR ANY OTHER DATA IS NOT TO BE REGARDED BY IMPLICATION OR OTHERWISE IN ANY MANNER LICENSING THE HOLDER OR ANY OTHER PERSONS OR CORPORATION, OR CONVEYING ANY RIGHTS OR PERMISSION TO MANUFACTURE, USE, OR SELL ANY PATENTED INVENTION THAT IN ANY WAY BE RELATED THERETO.

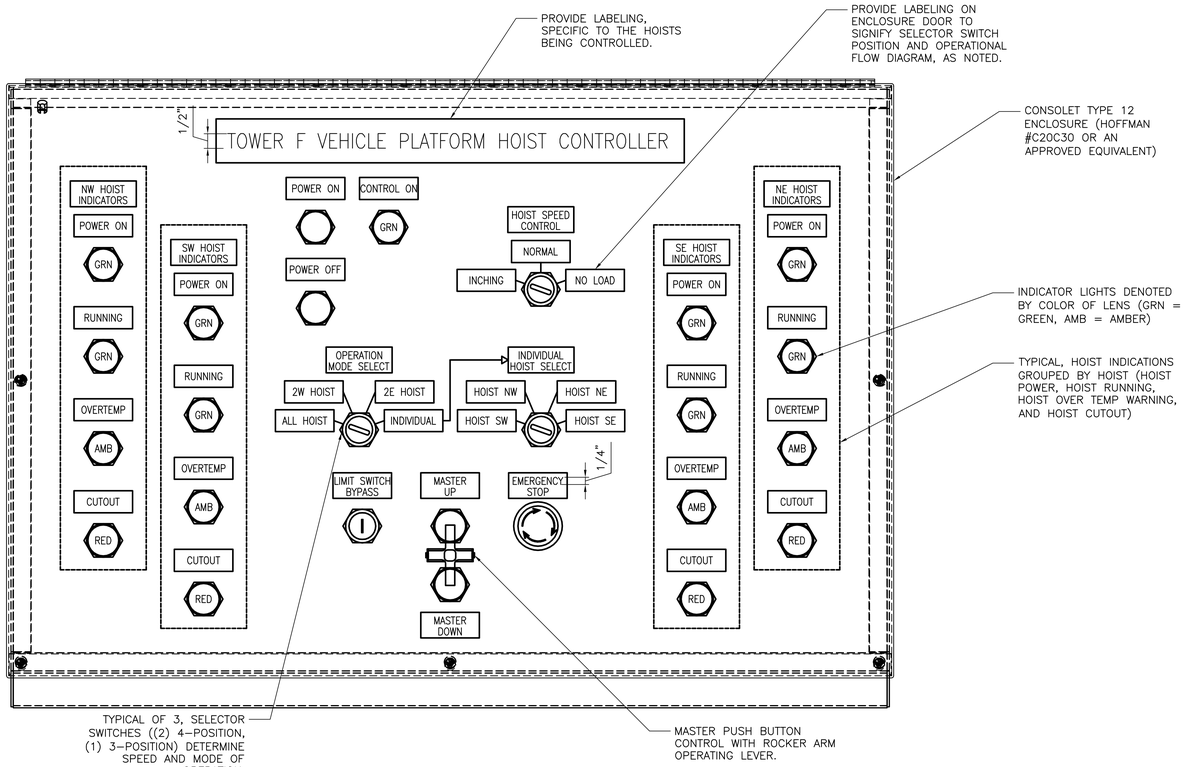

TYPICAL HOIST OPERATOR CONSOLET LAYOUT

SCALE: NTS

SPECIFIC NOTES:

A. THIS BLOCK DIAGRAM AND ELEVATION IS INTENDED TO DESCRIBE THE ELEMENTARY FUNCTION OF THE VEHICLE AND ELEVATOR HOIST CONTROLS. SEE SPECIFICATION 41 22 23.19 FOR REQUIRED EQUIPMENT PARAMETERS.

B. PROVIDE EMERGENCY STOP INTERFACE JUNCTION BOX NEAR HOIST CONTROLLERS, FOR EXTENSION OF CIRCUITRY BY OTHERS.

C. PROVIDED EXTENSION OF CONTROL CIRCUITRY TO OPERATOR CONSOLET FOR A FULLY FUNCTIONING SYSTEM. ROUTE CONDUITS FROM THE HOIST CONTROLLER AND ENTER THE CONSOLET PEDESTAL FROM BELOW TO ELIMINATE TRIPPING HAZARDS AROUND THE OPERATOR INTERFACE.

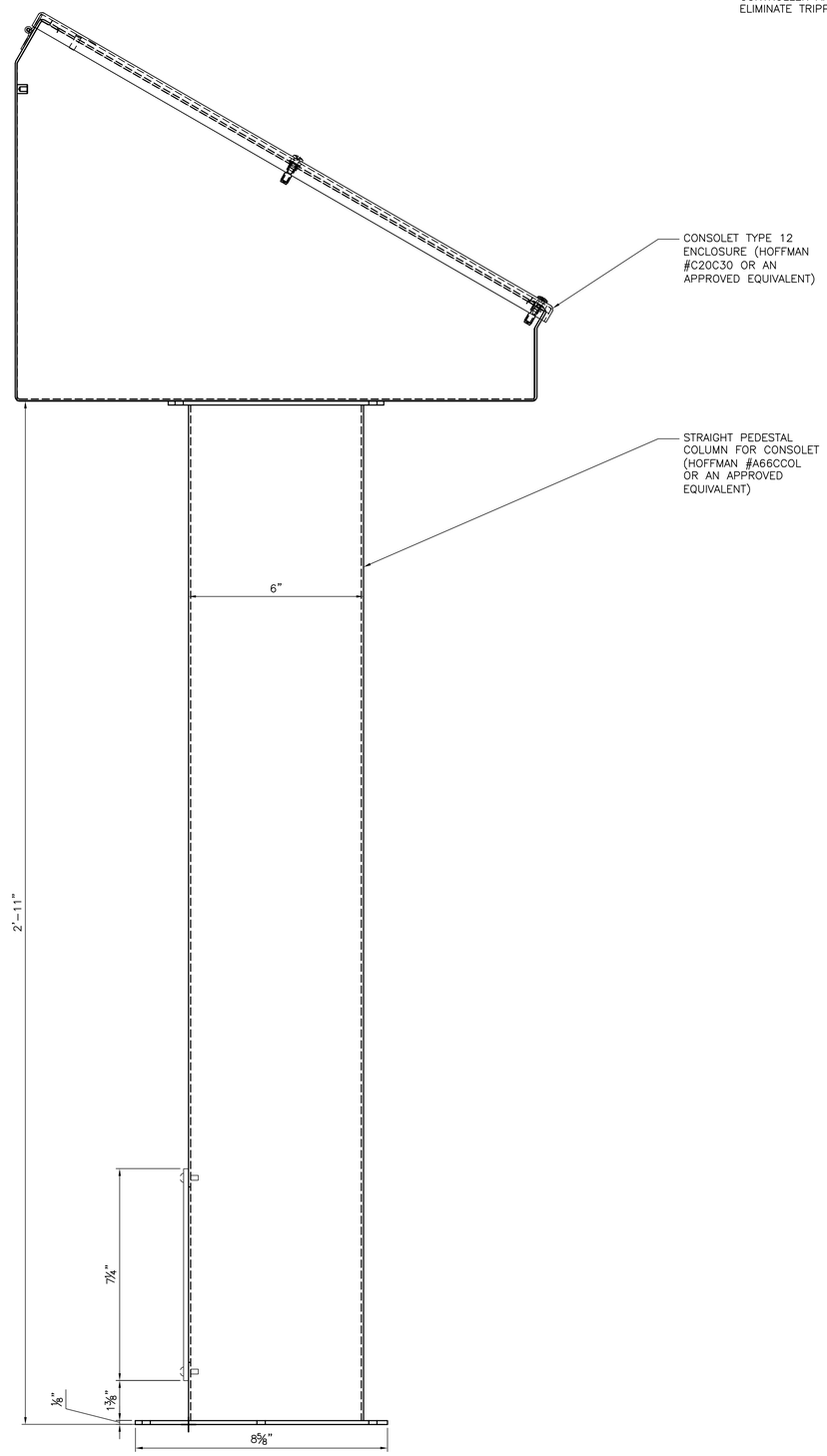

TYPICAL HOIST OPERATOR CONSOLET SIDE VIEW

SCALE: NTS

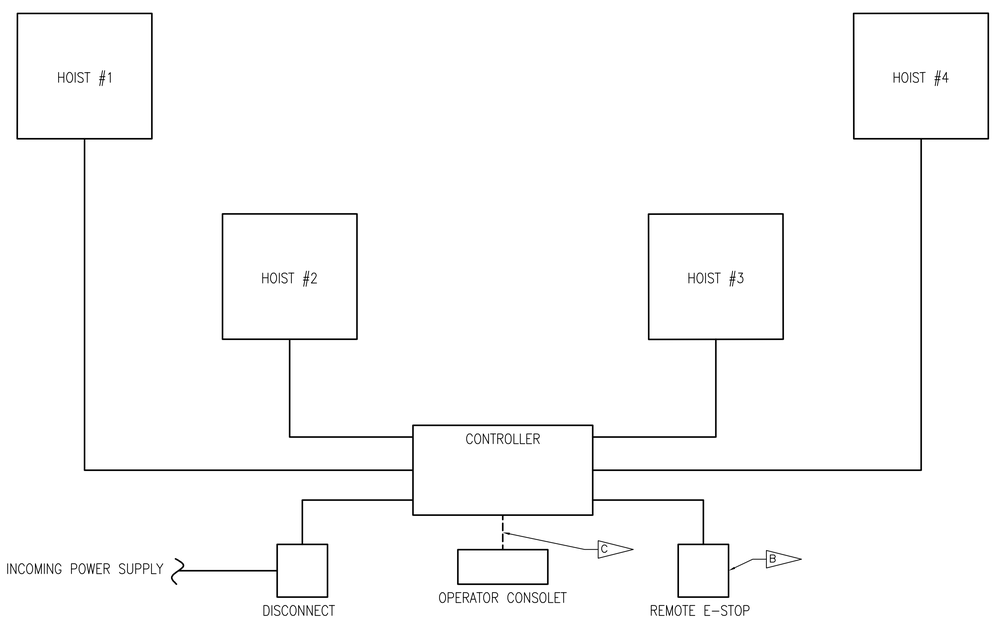

HOIST CONTROLLER ELEMENTARY BLOCK DIAGRAM

SCALE:NTS

WHEN PRINTED FULL SIZE, THIS SHEET IS 34"X44"
THIS COMPUTER DRAWING WAS CREATED IN AUTOCAD AND FILED UNDER THE DRAWING NUMBER

E-641

SYM	ZONE	DESCRIPTION	DATE	APPROVAL
		REVISIONS		

Reynolds, Smith and Hills, Inc.
115 Alma Blvd, Suite 101
Merritt Island, Florida 32953-4101
(321) 453-0212 (321) 453-0223 FAX
www.rsandh.com

SIGNATURES		DATE
DRAWN:	JOSEPH HAUER	08-20-2013
CHECKED:	DANIEL VIGEANT	08-20-2013
SUBMITTED: ARCH/ENG OF RECORD	KEVIN HARRIS	
ST OF LICENSURE: FL LICENSE NO:		
APPROVED:	JOHN KERCSMAR	
	MIKE HARTNETT	

NATIONAL AERONAUTICS AND SPACE ADMINISTRATION
JOHN F. KENNEDY SPACE CENTER, NASA
KENNEDY SPACE CENTER, FLORIDA

LAUNCH COMPLEX 39
VEHICLE ASSEMBLY BUILDING

MODIFY VEHICLE ASSEMBLY BUILDING HIGH BAY 3 FOR SLS – HOISTS HOIST CONTROLLER ELEVATION AND BLOCK DIAGRAM

FILE NO.	SIZE	DWG. NO.	REV
302-6058-043	E	79K39667	

PROJ. NO. PCN 99000.5 SHEET 43 OF 43