NOTICE — WHEN GOVERNMENT DRAWINGS, SPECIFICATIONS, OR OTHER DATA ARE USED FOR ANY PURPOSE OTHER THAN IN CONNECTION WITH A DEFINITELY RELATED GOVERNMENT PROCUREMENT OPERATION, THE UNITED STATES GOVERNMENT INCURS NO RESPONSIBILITY NOR ANY OBLIGATION WHATSOEVER, AND THE FACT THAT THE GOVERNMENT MAY HAVE FORMULATED, FURNISHED, OR IN ANY WAY SUPPLIED THE SAID DRAWINGS, SPECIFICATIONS OR ANY OTHER DATA IS NOT TO BE REGARDED BY IMPLICATION OR OTHERWISE IN ANY MANNER LICENSING THE HOLDER OR ANY OTHER PERSON OR CORPORATION, OR CONVEYING ANY RIGHTS OR PERMISSION TO MANUFACTURE, USE, OR SELL ANY PATENTED INVENTION THAT IN ANY WAY BE RELATED THERETO.

LAUNCH COMPLEX 39
VEHICLE ASSEMBLY BUILDING
MODIFY VEHICLE ASSEMBLY BUILDING
HIGH BAY 3 FOR SLS - ELEVATOR LANDINGS

NATIONAL AERONAUTICS AND SPACE ADMINISTRATION

John F. Kennedy Space Center
Kennedy Space Center, Florida 32899

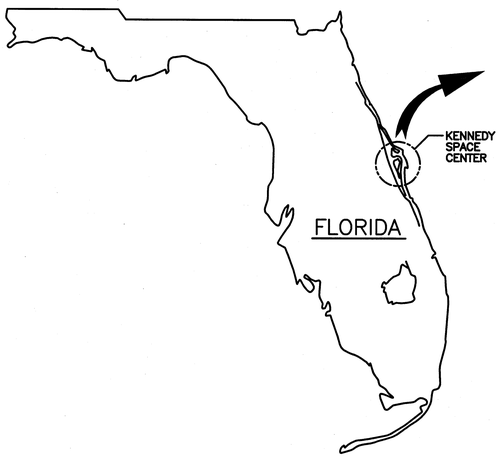

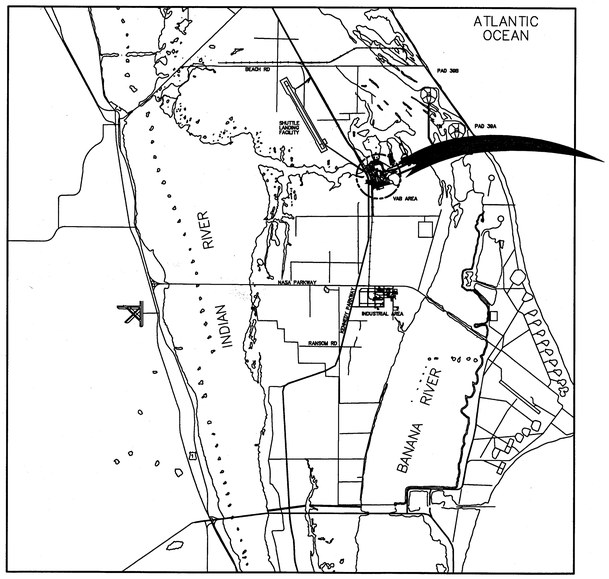

N
AREA MAP
NO SCALE

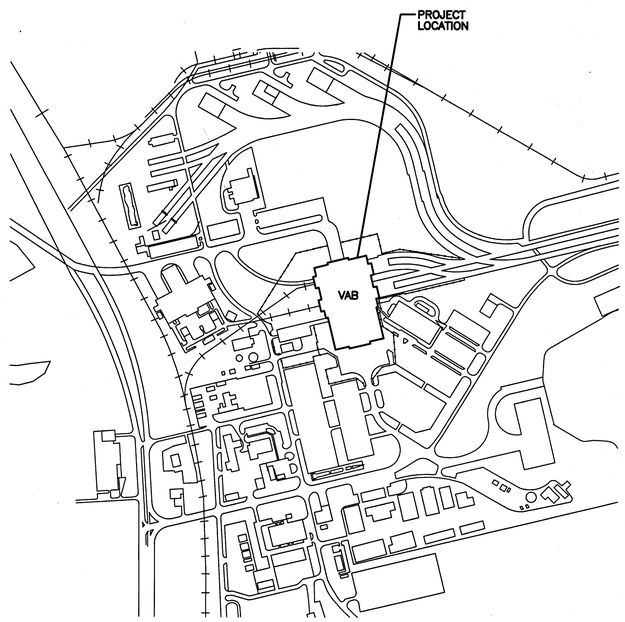

N
LOCATION MAP
NO SCALE

TECHNICAL SPECIFICATION No. 79K39666
DATA MANUAL: KSC-TA-12243
DATE: AUGUST 20, 2013

ASBESTOS IDENTIFIED	
☒ YES	☐ NO

IF THE CONTRACTOR SUSPECTS THE PRESENCE OF ANY ASBESTOS CONTAMINATED MATERIAL NOT IDENTIFIED ON THESE DRAWINGS, BUT IS REQUIRED TO BE DISTURBED TO PERFORM THE CONTRACT WORK, INFORM THE CONTRACTING OFFICER AT ONCE.

HEAVY METALS IDENTIFIED	
☒ YES	☐ NO

IF THE CONTRACTOR SUSPECTS THE PRESENCE OF ANY HEAVY METAL COATING MATERIAL NOT IDENTIFIED ON THESE DRAWINGS, BUT IS REQUIRED TO BE DISTURBED TO PERFORM THE CONTRACT WORK, INFORM THE CONTRACTING OFFICER AT ONCE.

DOCUMENT INFORMATION: (TITLE, NUMBER, REV, DATE) 79K39665
MODIFY VEHICLE ASSEMBLY BUILDING HIGH BAY 3 FOR SLS – ELEVATOR LANDINGS, PCN 99000.5, REV BASIC, AUGUST 20, 2013

Sensitive But Unclassified (SBU)
INSTRUCTIONS: This item must be reviewed under the requirements for "Sensitive But Unclassified Information" as described in NPR 1600.1, Chapter 5.

http://nodis-dms.gsfc.nasa.gov/

Document contains SBU?	Yes	No	SBU Reviewer's signature	Date	Company / Org
	☐	☒	Wallace R Schroeder	11-12-13	NASA TA-B3A

Export Control (EC)
INSTRUCTIONS: Attach the document requiring an export determination. Contact the KSC ECO Help Desk (867-9209) for help in completing this form.

http://exportcontrol.ksc.nasa.gov/

Contractor EC Reviewer's Name and Organization	Contractor EC Reviewer's signature	Date

NASA ECO Reviewer's Name and Organization	NASA ECO Reviewer's signature	Date
WALLACE R SCHROEDER NASA/TA-B3A	Wallace R Schroeder	11-12-13

	EXPORT DETERMINATION (Check one box only)	
EAR 99	☒	The information contained in the document is technical in content, but is not technical data as defined by the ITAR or the EAR, and therefore is EAR 99 NLR (no export license required). [General Prohibition Six (Embargo) applies to all items subject to the EAR, i.e. items on the CCL and within EAR 99-NLR. You may not make an export or re-export contrary to the provisions of part 746 (Embargos and Other Special Controls) of the EAR and 22 CFR part 126.1 of the ITAR.]
	NLR	
EAR Controlled	☐	This document is within the purview of the Export Administration Regulations (EAR), 15 CFR 730-774, and is export controlled. It may not be transferred to foreign nationals in the U.S. or abroad without specific approval of a Knowledgeable NASA export control official, and/or unless an export license or license exception is obtained/available from the Bureau of Industry and Security, United States Department of Commerce. Violations of these regulations are punishable by fine, imprisonment, or both.
ITAR Controlled	☐	This document contains information which falls under the purview of the U.S. Munitions List (USML), as defined in the International Traffic in Arms Regulations (ITAR), 22 CFR 120-130, and is export controlled. It shall not be transferred to foreign nationals, in the U.S. or abroad, without specific approval of a knowledgeable NASA export control official, and/or unless an export license or license exemption is obtained/available from the United States Department of State. Violations of these regulations are punishable by fine, imprisonment, or both.

KSC FORM 7-657V2 NS (REV 09/11) PREVIOUS EDITIONS ARE OBSOLETE

RS+H IMPROVING YOUR WORLD
Reynolds, Smith and Hills, Inc.
115 Alma Blvd, Suite 101
Merritt Island, Florida 32953-4101
(321) 453-0212 (321) 453-0223 FAX
www.rsandh.com

WHEN PRINTED FULL SIZE, THIS SHEET IS 34"X44"
THIS COMPUTER DRAWING WAS CREATED IN AUTOCAD AND FILED UNDER THE DRAWING NUMBER

V–001

SYM	ZONE	DESCRIPTION	DATE	APPROVAL
		REVISIONS		

RS+H IMPROVING YOUR WORLD
Reynolds, Smith and Hills, Inc.
115 Alma Blvd, Suite 101
Merritt Island, Florida 32953-4101
(321) 453-0212 (321) 453-0223 FAX
www.rsandh.com

NATIONAL AERONAUTICS AND SPACE ADMINISTRATION
JOHN F. KENNEDY SPACE CENTER, NASA
KENNEDY SPACE CENTER, FLORIDA

SIGNATURES		DATE
DRAWN:	JOSEPH HAUER	08-20-2013
CHECKED:	RICHARD PRUSS	08-20-2013
SUBMITTED:	ROBERT PRUSS	8-20-13
APPROVED:	JOHN KERCSMAR	8.20.13
	SONIA MILLER	8.22.13
	WALLACE SCHROEDER	11-12-13

LAUNCH COMPLEX 39
VEHICLE ASSEMBLY BUILDING
MODIFY VEHICLE ASSEMBLY BUILDING HIGH BAY 3 FOR SLS – ELEVATOR LANDINGS

COVER SHEET

FILE NO.	SIZE	DWG. NO.	REV
302-6058-043	E	79K39665	

PROJ. NO. PCN 99000.5 SHEET 1 OF 35

NOTICE — WHEN GOVERNMENT DRAWINGS, SPECIFICATIONS, OR OTHER DATA ARE USED FOR ANY PURPOSE OTHER THAN IN CONNECTION WITH A DEFINITELY RELATED GOVERNMENT PROCUREMENT OPERATION, THE UNITED STATES GOVERNMENT INCURS NO RESPONSIBILITY OR ANY OBLIGATION WHATSOEVER; AND THE FACT THAT THE GOVERNMENT MAY HAVE FORMULATED, FURNISHED, OR IN ANY WAY SUPPLIED THE SAID DRAWINGS, SPECIFICATIONS OR ANY OTHER DATA IS NOT TO BE REGARDED BY IMPLICATION OR OTHERWISE IN ANY MANNER LICENSING THE HOLDER OR ANY OTHER PERSONS OR CORPORATION, OR CONVEYING ANY RIGHTS OR PERMISSION TO MANUFACTURE, USE, OR SELL ANY PATENTED INVENTION THAT IN ANY WAY BE RELATED THERETO.

DRAWING INDEX

SHEET NUMBER	FUNCTION CODE	REVISION STATUS	SHEET TITLE
			GENERAL
1	V–001		COVER SHEET
2	V–002		DRAWING INDEX, GENERAL SYMBOLS AND ABBREVIATIONS
3	V–003		LAYDOWN WORK LOCATIONS
4	V–004		ELEVATOR PLATFORM OPERATIONS PLAN
			ENVIRONMENTAL
5	EN–001		METALS, PCBS, AND ASBESTOS SCHEDULES AND NOTES
			ARCHITECTURAL
6	A–001		ABBREVIATIONS, SYMBOLS AND GENERAL NOTES
7	AD–100		ELEVATOR LANDING DEMOLITION PLANS –1
8	AD–101		ELEVATOR LANDING DEMOLITION PLANS –2
9	AD–102		ELEVATOR LANDING DEMOLITION PLANS –3
10	A–100		ELEVATOR LANDING PLATFORMS TYPICAL PLANS AND DETAILS
11	A–500		ELEVATOR LANDING PLATFORMS DETAILS AND DOOR SCHEDULE
12	A–501		GUARDRAIL AND MISCELLANEOUS DETAILS
			STRUCTURAL
13	S–001		STRUCTURAL GENERAL NOTES
14	S–600		ELEVATOR LANDING PLAN
15	S–601		ELEVATOR LANDING DETAILS –1
16	S–602		ELEVATOR LANDING DETAILS –2
17	S–603		ELEVATOR LANDING DETAILS –3
18	S–604		ELEVATOR LANDING DETAILS –4
19	S–605		ELEVATOR LANDING DETAILS –5
20	S–606		ELEVATOR LANDING DETAILS –6
21	S–607		ELEVATOR LANDING DETAILS –7
			MECHANICAL
22	M–401		ELEVATOR PLATFORM MECHANICAL GENERAL NOTES/LIFTING LUG ASSEMBLY – 1
23	M–402		ELEVATOR PLATFORM LIFTING LUG ASSEMBLY – 2
24	M–403		ELEVATOR PLATFORM LIFTING LUG ASSEMBLY DETAILS – 1
25	M–404		ELEVATOR PLATFORM LIFTING LUG ASSEMBLY DETAILS – 2
			ELECTRICAL
26	E–001		ELECTRICAL GENERAL NOTES, LEGEND AND ABBREVIATIONS
27	ED–100		ELEVATOR LANDINGS – ELECTRICAL DEMOLITION PLANS
28	ED–101		ELEVATOR LANDINGS – ELECTRICAL DEMOLITION PLANS
29	ED–102		ELEVATOR LANDINGS – ELECTRICAL DEMOLITION PLANS
30	ED–500		ELECTRICAL DEMOLITION ELEVATOR PLATFORM – DETAILS 1
31	ED–501		ELECTRICAL DEMOLITION ELEVATOR PLATFORM – DETAILS 2
32	E–100		ELEVATOR LANDINGS – ELECTRICAL PLAN
33	E–550		ELEVATOR PLATFORM – ELECTRICAL DETAILS
34	E–670		PANEL SCHEDULES – SHEET 1
35	E–671		PANEL SCHEDULES – SHEET 2

ABBREVIATIONS

ACM	ASBESTOS CONTAINING MATERIAL
AISC	AMERICAN INSTITUTE OF STEEL CONSTRUCTION
AMP	AMPERES
ASD	ALLOWABLE STRENGTH DESIGN
ASTM	AMERICAN SOCIETY for TESTING and MATERIALS
AWS	AMERICAN WELDING SOCIETY
CKT	CIRCUIT
CKT BKR	CIRCUIT BREAKER
CRF	CODE OF FEDERAL REGULATIONS
DEG	DEGREE(S)
DIA	DIAMETER
DWG(S)	DRAWING(S)
EL	ELEVATION
ELEC	ELECTRICAL
ELEV	ELEVATOR
EQ	EQUAL
EST	ESTIMATE
ETC	ET CETERA
EXST	EXISTING
FAC	FACILITY
FJ	FIELD JOINT
FT	FOOT
GA	GAGE
GND	GROUND
GR	GRADE
HDG	HOT DIPPED GALVANIZED
HDP	HOLDDOWN POST
HMP	HOMOGENEOUS MATERIAL PAINT
HSS	HOLLOW STRUCTURAL SQUARE AND RECTANGULAR SECTIONS
HT	HEIGHT
ICPS	INTERIM CRYOGENIC PROPULSION STAGE
ID	INSIDE DIAMETER
KG	KILOGRAM
KIP	KILOPOUND
KV	KILOVOLTS
KVA	KILOVOLT–AMPERES
KW	KILOWATTS
LAS	LAUNCH ABORT SYSTEM
LB	POUND
LBS	POUNDS
LVL	LEVEL
LVSA	LAUNCH VEHICLE STAGE ADAPTER
MAX	MAXIMUM
MCB	MAIN CIRCUIT BREAKER
MG	MILLIGRAM
MIN	MINIMUM
MLB	MOBILE LAUNCHER BASE
NEC	NATIONAL ELECTRIC CODE
NEMA	NATIONAL ELECTRICAL MANUFACTURERS ASSOCIATION
NIC	NOT IN CONTRACT
NO	NUMBER/NORMALLY OPEN
NTS	NOT TO SCALE
OAE	OR APPROVED EQUAL
OC	ON CENTER
OD	OUTSIDE DIAMETER
OPP	OPPOSITE
P/N	PART NUMBER
PCB	POLYCHLORINATED BYPHENOLS
PLCS	PLACES
PL	PLATE
PLATF	PLATFORM
QTY	QUANTITY
RCPT	RECEPTACLE
REF	REFERENCE
RGC	RIGID GALVANIZED CONDUIT
SCH	SCHEDULE
SIM	SIMILAR
SLV	SHORT LEG VERTICAL
SQFT	SQUARE FOOT / FEET
SRM	SOLID ROCKET MOTER
SST	STAINLESS STEEL
STD	STANDARD
SYM	SYMBOL
TBD	TO BE DETERMINED
TOS	TOP OF STEEL
TYP	TYPICAL
UG	MICROGRAM
UHMW	ULTRA HIGH MOLECULAR WEIGHT POLYETHYLENE
UNC	UNIFIED COARSE
UNF	UNIFIED FINE
V	VOLT
VAB	VEHICLE ASSEMBLY BUILDING
VAC	VOLTS, AC
VIF	VERIFY IN FIELD
WF	WIDE FRAME
"	INCH(ES)
'	FOOT(FEET)

DRAWING SYMBOLS

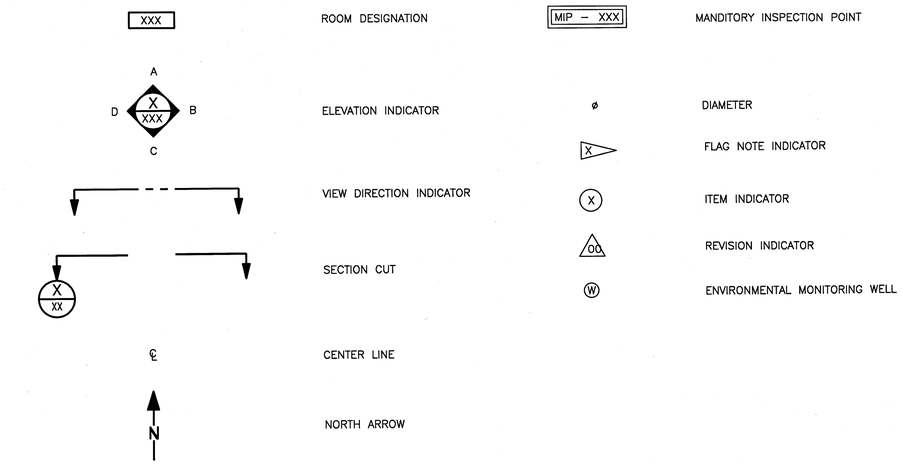

DRAWING TITLE
SCALE:NTS

HOSE CARRIER SECTION
SCALE:NTS

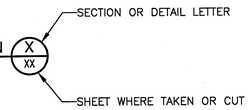

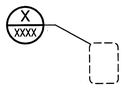

REFERENCE SYMBOL

WHEN PRINTED FULL SIZE, THIS SHEET IS 34"X44"
THIS COMPUTER DRAWING WAS
CREATED IN AUTOCAD AND
FILED UNDER THE DRAWING NUMBER

V–002

SYM	ZONE	DESCRIPTION	DATE	APPROVAL
		REVISIONS		

RS&H IMPROVING YOUR WORLD
Reynolds, Smith and Hills, Inc.
115 Alma Blvd. Suite 101
Merritt Island, Florida 32953-4101
(321) 453-0212 (321) 453-0223 FAX
www.rsandh.com

SIGNATURES	DATE
DRAWN: BRIAN CURTIS	08-20-2013
CHECKED: RICHARD PRUSS	08-20-2013
SUBMITTED: ARCHIENG OF RECORD: ROBERT PRUSS	8-21-13
ST OF LICENSURE: FL	
LICENSE NO: 70352	
APPROVED: JOHN KENCSMAR	8.20.13
MIKE HARTNETT	11/5/13

NATIONAL AERONAUTICS AND SPACE ADMINISTRATION
JOHN F. KENNEDY SPACE CENTER, NASA
KENNEDY SPACE CENTER, FLORIDA

LAUNCH COMPLEX 39
VEHICLE ASSEMBLY BUILDING

MODIFY VEHICLE ASSEMBLY BUILDING HIGH BAY 3 FOR SLS – ELEVATOR LANDINGS DRAWING INDEX, GENERAL SYMBOLS AND ABBREVIATIONS

FILE NO.	SIZE	DWG. NO.	REV
302–6058–043	E	79K39665	

PROJ. NO. PCN 99000.5 SHEET 2 OF

NOTICE — WHEN GOVERNMENT DRAWINGS, SPECIFICATIONS, OR OTHER DATA ARE USED FOR ANY PURPOSE OTHER THAN IN CONNECTION WITH A DEFINITELY RELATED GOVERNMENT PROCUREMENT OPERATION, THE UNITED STATES GOVERNMENT THEREBY INCURS NO RESPONSIBILITY NOR ANY OBLIGATION WHATSOEVER; AND THE FACT THAT THE GOVERNMENT MAY HAVE FORMULATED, FURNISHED, OR IN ANY WAY SUPPLIED THE SAID DRAWINGS, SPECIFICATIONS, OR OTHER DATA IS NOT TO BE REGARDED BY IMPLICATION OR OTHERWISE IN ANY MANNER LICENSING THE HOLDER OF ANY OTHER PERSONS OR CORPORATION, OR CONVEYING ANY RIGHTS OR PERMISSION TO MANUFACTURE, USE, OR SELL ANY PATENTED INVENTION THAT IN ANY WAY BE RELATED THERETO.

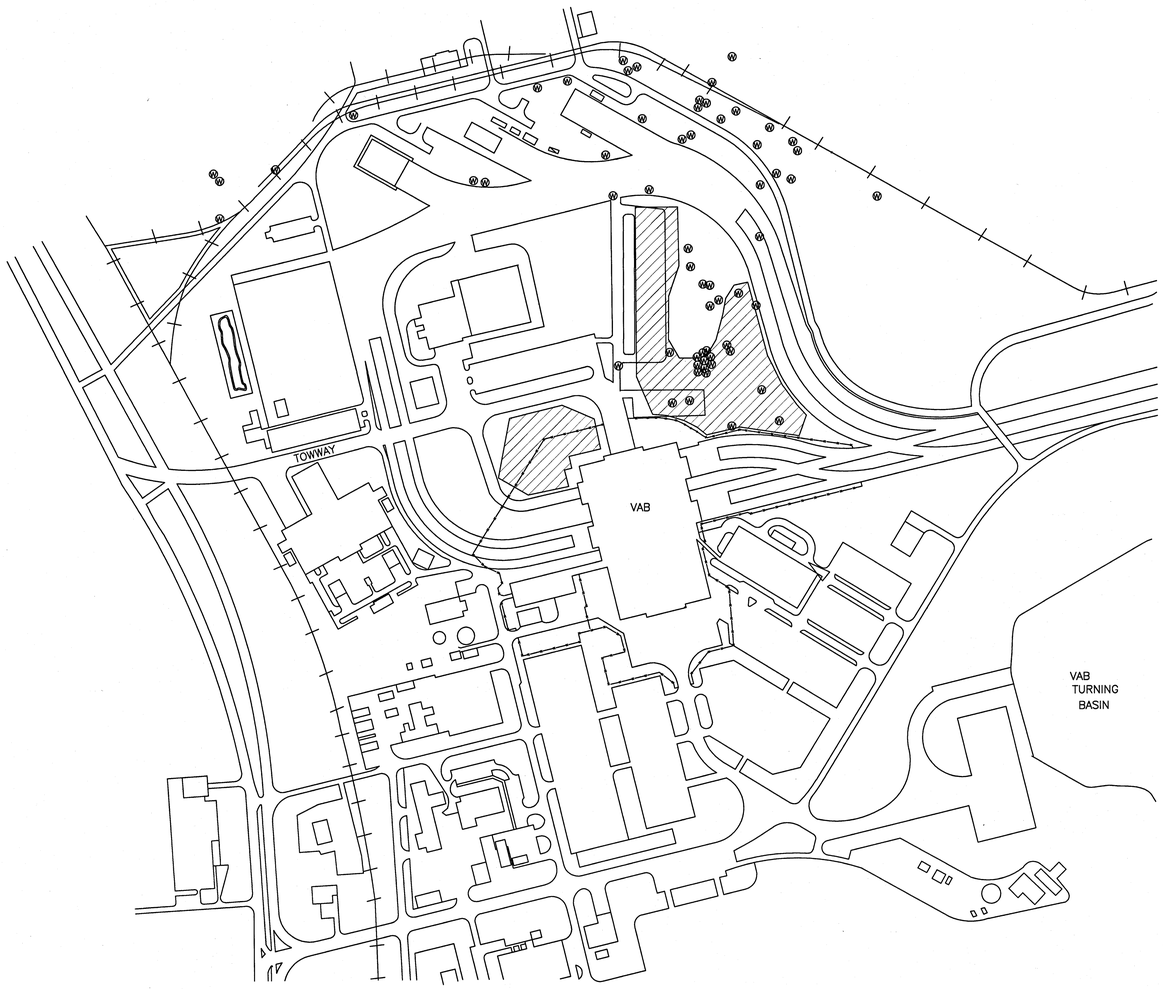

CONSTRUCTION SITE AND LAYDOWN AREA
SCALE: NTS

NOTES:

1. CONTRACTOR USE OF LAYDOWN AREAS SHALL ENSURE STORMWATER DRAINAGE TO COLLECTION AREAS ARE NOT IMPEDED. LAYDOWN AREAS SHALL NOT BE USED TO PERFORM ABRASIVE/WATER BLASTING, PAINTING, WELDING, CUTTING, ETC. WITHOUT APPROVAL FROM THE CONTRACTING OFFICER AND CONCURRENCE FROM THE NASA ENVIRONMENTAL ASSURANCE BRANCH.

2. IT IS THE CONTRACTOR'S RESPONSIBILITY TO FIELD VERIFY THE LOCATION OF EXISTING UTILITIES, INCLUDING ENVIRONMENTAL MONITORING WELLS, PROTECT THEM IN PLACE AND MAINTAIN THEM IN SERVICE AT ALL TIMES. THE CONTRACTOR SHALL IMMEDIATELY NOTIFY THE CONTRACTING OFFICER OF ANY UTILITY DAMAGED BY CONSTRUCTION ACTIVITY. THE CONTRACTOR IS RESPONSIBLE FOR REPAIRING AND RETURNING UTILITIES TO SERVICE AS SOON AS POSSIBLE AFTER THE OCCURRENCE OF DAMAGE OR SERVICE OUTAGE.

3. CONTRACTOR SHALL SUBMIT, FOR APPROVAL, A PLAN TO STABILIZE ALL REQUIRED AREAS TO BE USED FOR HEAVY EQUIPMENT TRAVEL/PARKING. PLAN SHALL INCLUDE, AT A MINIMUM, CONSTRUCTION SITE, ALL LAYDOWN AREAS, AND ACCESS TO THOSE AREAS, AS REQUIRED. CONTRACTOR SHALL BE RESPONSIBLE TO PERFORM NECESSARY STABILIZATION PER THE APPROVED PLAN PRIOR TO LOCATING ANY HEAVY EQUIPMENT ON SITE.

4. ▨ INDICATES CONSTRUCTION SITE AND LAYDOWN AREAS.

5. CONTRACTOR SHALL USE TOWWAY FROM KENNEDY PARKWAY FOR PRIMARY INGRESS AND EGRESS TO AND FROM THE CONSTRUCTION SITE.

6. PARKING LOCATIONS FOR CONTRACTOR PERSONNEL SHALL BE COORDINATED WITH THE CONTRACTING OFFICER.

7. CONTRACTOR TRAILER LOCATIONS SHALL BE COORDINATED WITH THE CONTRACTING OFFICER.

8. THE CONTRACTOR IS RESPONSIBLE FOR PROVIDING ALL UTILITY HOOKUPS TO CONSTRUCTION TRAILERS. UTILITY POINTS OF CONNECTION SHALL BE COORDINATED WITH THE CONTRACTING OFFICER.

9. AREA DISTURBED DURING DEMOLITION AND CONSTRUCTION SHALL BE RE-GRADED TO MATCH ADJACENT TOPOGRAPHY. ALL DISTURBED AREAS ON SITE SHALL RECEIVE GROUND COVER TO MATCH EXISTING PRIOR TO COMPLETION OF CONSTRUCTION.

10. Ⓦ INDICATES ENVIRONMENTAL WELL LOCATIONS. CONTRACTOR SHALL PROTECT ENVIRONMENTAL MONITORING WELLS IN PLACE. DAMAGED ENVIRONMENTAL MONITORING WELLS WILL BE REPAIRED OR REPLACED BY THE CONTRACTOR AT NO ADDITIONAL COST TO THE GOVERNMENT. ENVIRONMENTAL MONITORING WELL LOCATIONS SHOWN ON THIS SHEET ARE APPROXIMATE.

SYM	ZONE	DESCRIPTION	DATE	APPROVAL
		REVISIONS		

RS&H IMPROVING YOUR WORLD
Reynolds, Smith and Hills, Inc.
115 Alma Blvd, Suite 101
Merritt Island, Florida 32953-4101
(321) 453-0212 (321) 453-0223 FAX
www.rsandh.com

SIGNATURES	DATE
DRAWN: JOSEPH HAUER	08-20-2013
CHECKED: RICHARD YOUNG	08-20-2013
SUBMITTED AS/BUILT OF RECORD: ROBERT PRUSS	8/26/2017
ST OF LICENSURE: FL LICENSE NO: 73352	
APPROVED: JOHN KERCSMAR	8.20.13
MIKE HARTNETT	11/5/13

NATIONAL AERONAUTICS AND SPACE ADMINISTRATION
JOHN F. KENNEDY SPACE CENTER, NASA
KENNEDY SPACE CENTER, FLORIDA

LAUNCH COMPLEX 39
VEHICLE ASSEMBLY BUILDING
MODIFY VEHICLE ASSEMBLY BUILDING HIGH BAY 3 FOR SLS – ELEVATOR LANDINGS

LAYDOWN WORK LOCATIONS

FILE NO.	SIZE	DWG. NO.	REV
302-6058-043	E	79K39665	
PROJ. NO. PCN 99000.5	SHEET 3 OF		

WHEN PRINTED FULL SIZE, THIS SHEET IS 34"X44"
THIS COMPUTER DRAWING WAS CREATED IN AUTOCAD AND FILED UNDER THE DRAWING NUMBER

V-003

NOTICE — WHEN GOVERNMENT DRAWINGS, SPECIFICATIONS, OR OTHER DATA ARE USED FOR ANY PURPOSE OTHER THAN IN CONNECTION WITH A DEFINITELY RELATED GOVERNMENT PROCUREMENT OPERATION, THE UNITED STATES GOVERNMENT THEREBY INCURS NO RESPONSIBILITY NOR ANY OBLIGATION WHATSOEVER; AND THE FACT THAT THE GOVERNMENT MAY HAVE FORMULATED, FURNISHED, OR IN ANY WAY SUPPLIED THE SAID DRAWINGS, SPECIFICATIONS, OR OTHER DATA IS NOT TO BE REGARDED BY IMPLICATION OR OTHERWISE IN ANY MANNER LICENSING THE HOLDER OR ANY OTHER PERSON OR CORPORATION, OR CONVEYING ANY RIGHTS OR PERMISSION TO MANUFACTURE, USE, OR SELL ANY PATENTED INVENTION THAT IN ANY WAY BE RELATED THERETO.

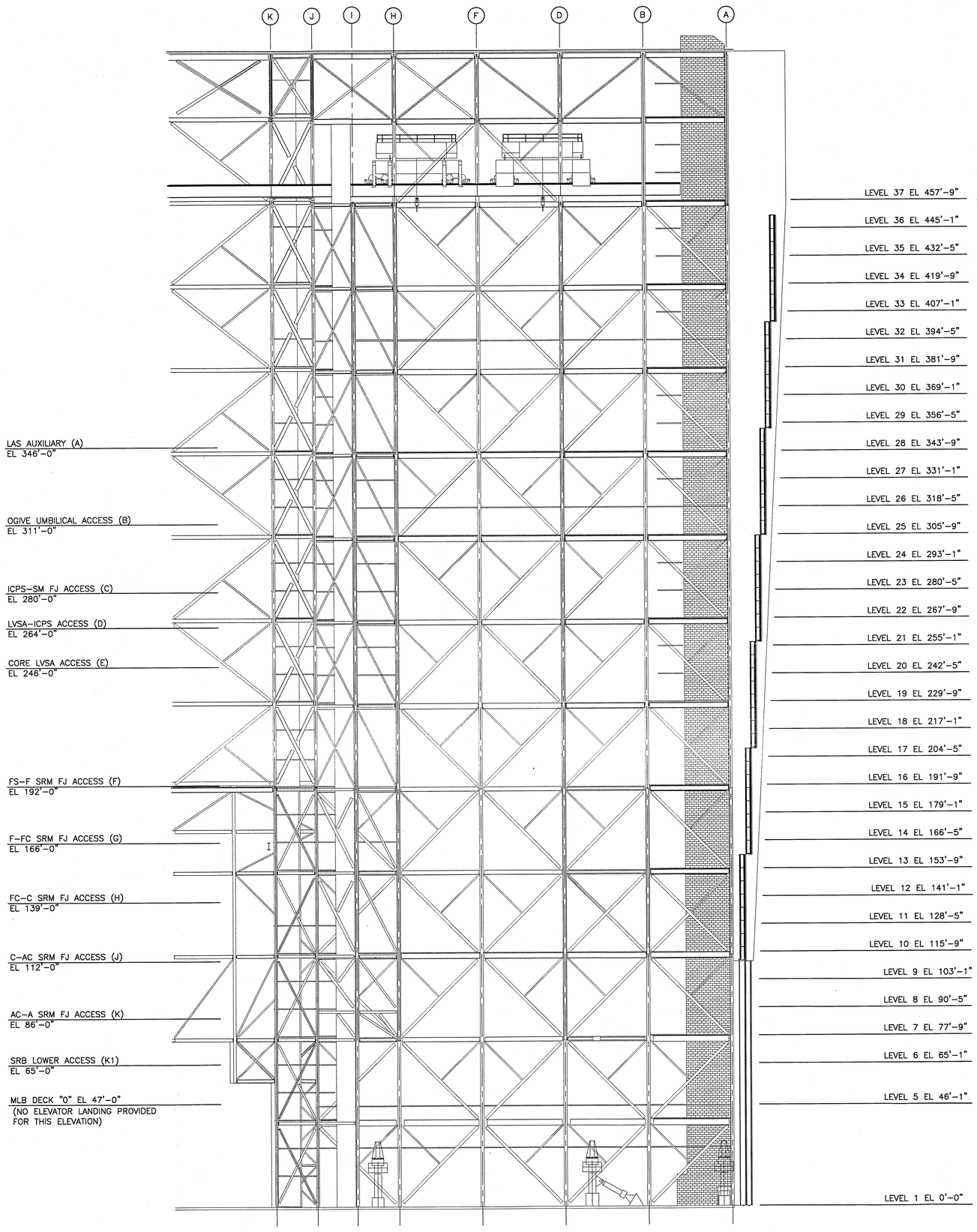

BUILDING SECTION (ALONG COLUMN LINE 6 LOOKING NORTH)
SCALE: 1"=20'

ELEVATOR PLATFORM INSTALLATION:

WARNING: THE FOLLOWING STEPS ARE HAZARDOUS. TASK LEADER TO CONDUCT A PRETASK BRIEFING.

NOTE: ELEVATOR HOIST(S) HAVE A TRAVEL DISTANCE OF 85'.

NOTE: DURING THE INITIAL PLATFORM LIFT THERE IS NO EMERGENCY STOP OR LIGHTING ON THE ELEVATOR PLATFORM.

NOTE: TEMPORARY REMOVAL OF VAB LEVEL 5 ELEVATOR LANDING MAY BE REQUIRED FOR THE REMOVAL OF THE EXISTING ELEVATOR LANDING PLATFORMS AND INSTALLATION OF THE NEW/MODIFIED ELEVATOR LANDING PLATFORMS ABOVE.

1. POSITION THE ELEVATOR PLATFORM IN THE HIGH BAY(S) WHERE THEY WILL BE INSTALLED.
2. VERIFY THAT THE PLATFORM LIFTING ASSEMBLY PINS ARE FULLY RETRACTED (4 PLACES).
3. INSTALL THE FALL ARREST POSTS ONTO THE PLATFORM.
4. VERIFY/PERFORM THAT THE CORBEL PINS ARE IN THE RETRACTED POSITION (NOT ENGAGED THROUGH THE CORBEL PLATES) (8 PLACES).

NOTE: SEE DRAWING 79K39667 SHEET M-816 FOR SLING SCHEDULE.

5. INSTALL ONE SET OF SLINGS ON THE HOIST HOOKS FROM THE SERVICE PLATFORMS.
6. LOWER THE 4 ELEVATOR HOIST HOOKS TO THEIR FULLY EXTENDED POSITION.
7. CONNECT ADDITION LENGTHS OF SLING(S) TO ALLOW SLING(S) TO REACH THE PLATFORM LIFTING ASSEMBLY PINS.
8. CONNECT THE SLINGS TO THE ELEVATOR PLATFORM LIFTING ASSEMBLY PINS BY EXTENDING THE LIFTING PIN THROUGH THE SLING.

CAUTION: AS PLATFORM CORBELS ENGAGE INTO VERTICAL T-RAILS USE CAUTION TO PREVENT DAMAGE TO NYLON CORBEL INSERTS. IF CORBEL INSERTS ARE DAMAGED, CONTRACTOR SHALL REPLACE AT NO COST TO THE GOVERNMENT.

NOTE: VERTICAL T-RAILS ARE MARKED AT 5' INTERVALS, HOLES ARE SPACED AT 1' INTERVALS. ZERO ELEVATION IS THE VAB FLOOR.

9. RAISE PLATFORM UNTIL CORBELS ARE FULLY ENGAGED WITH THE VERTICAL T-RAIL.
10. INSERT CORBEL PINS (8 PINS) THRU CORBEL PLATES, ROTATE TO LOCK.

NOTE: E-STOP AND POWER INTERFACE CORD PLUGS HAVE 30' CABLES AND MUST BE DIS-CONNECTED AND RECONNECT AT INTERVALS LESS THAN 30' FROM THE INTERFACE POINT. ACCESS TO FACILITY CONNECTIONS IS DONE USING EGRESS LADDERS.

11. CONNECT THE E-STOP AND ELEVATOR LANDING POWER CONNECTIONS.

NOTE: DUE TO THE SLING LENGTHS AND SLING STRETCH AFTER THE INITIAL LIFT AND THE FIRST SET OF SLINGS ARE REMOVED IT MIGHT BE NECESSARY TO INSTALL THE 5' SLINGS TO ALLOW LIFTING PIN CONNECTION.

12. LOWER THE HOISTS TO REMOVE THE APPROPRIATE LENGTH OF SLING(S) TO PERFORM THE NEXT HEIGHT ADJUSTMENT.
13. CONNECT SLINGS TO THE PLATFORM LIFTING ASSEMBLY PINS.
14. LIFT PLATFORM SLIGHTLY TO TAKE THE LOAD OFF THE PLATFORM AND REMOVE THE 8 CORBEL PINS.

NOTE: INSTALL GUARDRAILS ON ALL PLATFORMS THAT HAVE LIFTING PIN COVERS REMOVED.

15. REPEAT STEPS 9.0 THRU 14.0 UNTIL ELEVATOR PLATFORM IS INSTALLED IN ITS DESIRED ELEVATION/LOCATION.

NOTE: FAILURE TO RETRACT PLATFORM LIFTING LUGS WILL CAUSE INTERFERENCE WITH INSTALLATION OF OTHER PLATFORMS.

16. REMOVE THE SLINGS AND RETRACT THE PLATFORM LIFTING ASSEMBLY PINS.
17. PLATFORM INSTALLATION COMPLETE.
18. REPEAT STEPS 1.0 THRU STEPS 16.0 FOR EACH ELEVATOR PLATFORM THAT WILL BE INSTALLED.
19. RE-INSTALL THE PLATFORM LIFTING ASSEMBLY PIN COVERS.
20. REMOVE THE FALL ARREST POSTS AND RE-INSTALL COVERS.
21. CONNECT PLATFORM ELEVATOR INTERFACE CABLING AND RUN ELEVATOR CAR TEST TO VERIFY PROPER CAR TRAVEL AND CLEARANCE.
22. REMOVE THE FALL ARREST POLE AND REPLACE COVER.
23. REMOVE ANY REMAINING SLINGS AND RETURN HOISTS TO THEIR STOWED POSITION.
24. OPERATION COMPLETE.

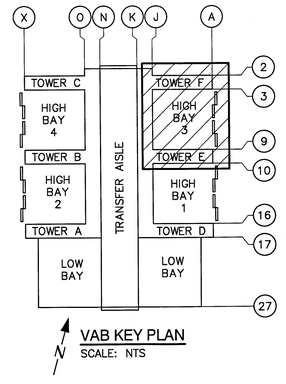

VAB KEY PLAN
SCALE: NTS

20 10 0 20 40
1 IN = 20 FT

WHEN PRINTED FULL SIZE, THIS SHEET IS 34"X44"
THIS COMPUTER DRAWING WAS CREATED IN AUTOCAD AND FILED UNDER THE DRAWING NUMBER

V-004

SYM	ZONE	DESCRIPTION	DATE	APPROVAL
		REVISIONS		

RS&H IMPROVING YOUR WORLD

Reynolds, Smith and Hills, Inc.
115 Alma Blvd, Suite 101
Merritt Island, Florida 32953-4101
(321) 453-0212 (321) 453-0223 FAX
www.rsandh.com

SIGNATURES	DATE
DRAWN: JOSEPH HAUER	08-20-2013
CHECKED: JOE DAMICO	08-20-2013
SUBMITTED: ARCHIENG OF RECORD: ROBERT PRUSS	8-20-013
ST OF LICENSURE: FL LICENSE NO: 70352	
APPROVED: JOHN KERKSMAR FOR	8.20.13
MIKE HARTNETT	11/5/13

NATIONAL AERONAUTICS AND SPACE ADMINISTRATION
JOHN F. KENNEDY SPACE CENTER, NASA
KENNEDY SPACE CENTER, FLORIDA

LAUNCH COMPLEX 39
VEHICLE ASSEMBLY BUILDING

MODIFY VEHICLE ASSEMBLY BUILDING HIGH BAY 3 FOR SLS - ELEVATOR LANDINGS ELEVATOR PLATFORM OPERATIONS PLAN

FILE NO.	SIZE	DWG. NO.	REV
302-6058-043	E	79K39665	

PROJ. NO. PCN 99000.5 SHEET 4 OF

NOTICE -- WHEN GOVERNMENT DRAWINGS, SPECIFICATIONS, OR OTHER DATA ARE USED FOR ANY PURPOSE OTHER THAN IN CONNECTION WITH A DEFINITELY RELATED GOVERNMENT PROCUREMENT OPERATION, THE UNITED STATES GOVERNMENT THEREBY INCURS NO RESPONSIBILITY NOR ANY OBLIGATION WHATSOEVER; AND THE FACT THAT THE GOVERNMENT MAY HAVE FORMULATED, FURNISHED, OR IN ANY WAY SUPPLIED THE SAID DRAWINGS, SPECIFICATIONS OR ANY OTHER DATA IS NOT TO BE REGARDED BY IMPLICATION OR OTHERWISE IN ANY MANNER LICENSING THE HOLDER OR ANY OTHER PERSON OR CORPORATION, OR CONVEYING ANY RIGHTS OR PERMISSION TO MANUFACTURE, USE, OR SELL ANY PATENTED INVENTION THAT IN ANY WAY BE RELATED THERETO.

High Bay 3: Total Metals/PCB Inspection Analysis Summary
Elevator Landing Platform

HMID	Homogeneous Material Description	Coating Appearance	Sample ID Numbers	Hazardous Metals (Yes/No)	PCBs (Yes/No)	As (mg/Kg)	Ba (mg/Kg)	Cd (mg/Kg)	Cr (mg/Kg)	Cr6 (mg/Kg)	Pb (mg/Kg)	Hg (ug/Kg)	Se (mg/Kg)	Ag (mg/Kg)	PCBs (ug/Kg)
HMP01	Non-Skid Platform Floor Coating	Gray/Yellow Paint Layers Gray/Orange Paint Layers Gray/Yellow /Blue Paint Layers Grey/Blue Paint Layers	M3701, M3702, M3704, M3708, M3703, M3709, M3764, M3782	Yes	Yes	<97	**360**	<49	**8,500**	**7,000**	**1,700**	**21,000**	<97	<19	**8,600**
HMP03	Vertical Beam Coatings	White Paint Gray Paint White/Gray Paint Layers	M3718, M3749, M3769, M3781	Yes	Yes	<96	<96	**150**	**210**	**6.4**	**1,500**	**920**	<96	<19	**4,200**
HMP04	Horizontal Beam Coatings	Gray Paint	M3735, M3748, M3754, M3772, M3773	Yes	Yes	<99	**160**	**180**	**400**	**870**	**2,000**	**8,900**	<99	<20	**5,800**
HMP05	Cross Beam Coating	Gray Paint	M3722, M3725, M3744, M3759, M3770	Yes	Yes	<100	**350**	**320**	**450**	**1.9**	**1,500**	**660**	<100	<20	**4,500**
HMP09	Block Wall Coating	Blue/Tan Paint Layers White/Tan Paint Layers Gray Paint Blue/Tan/White Paint Layers	M3711, M3721, M3739, M3758	Yes	Yes	<95	<95	<48	**480**	**9.1**	**3,900**	**11,000**	<95	<19	**180,000**
HMP10	Metal Door Coating	Gray/Red Paint Layers	M3710, M3726, M3727, M3732, M3733, M3746, M3766	Yes	Yes	<100	**6,900**	<50	**12,000**	**10,000**	**3,300**	**48,000**	<100	<20	**130,000**
HMP11	Metal Door Frame Coating	Gray/Red Paint Layers	M3707, M3728, M3734, M3737, M3745, M3767	Yes	Yes	<99	**8,300**	<50	**4,500**	**3,100**	**2,000**	**50,000**	<99	<20	**110,000**
HMP12	Electrical Panel/Box Coating	Gray Paint Gray/White Paint Layers	M3729, M3738, M3743, M3765	Yes	Yes	<93	**310**	**47**	**310**	**6.9**	**2,700**	**38,000**	<93	<19	**6,900**
HMP13	Roof Drain Pipe Coating	Black Paint	M3774, M3775, M3776, M3777, M3783	Yes	Yes	**130**	<98	<49	**580**	**0.67**	**1,100**	**2,100**	<98	<20	**53,000**

Note: The above results represent the highest reported concentrations for the sample sets shown. Laboratory analytical data is referenced in InoMedic Health Applications "Asbestos, Hazardous Metals & PCB Survey" report, dated 26 April 2013 (PCN: 99000.5).
Heavy Metals/Polychlorinated Byphenols detected at concentrations above their respective Method Detection Limits are highlighted and in **Bold**.
HMID - Homogeneous Material Identification Number
Sample collection dates: February 14, 2013 and March 27, 2013

HAZARDOUS METALS AND PCBS

1. EXISTING PAINT COATINGS ON HOMOGENEOUS MATERIAL INDENTIFIED IN THE TABLE CONTAIN HEAVY METALS AND PCBS. DISTURBANCE OF THESE EXISTING COATINGS SHALL BE IN ACCORDANCE WITH FEDERAL, STATE, AND LOCAL HEALTH AND SAFETY REQUIREMENTS. THE CONTRACTOR SHALL SUBMIT A HEALTH AND SAFETY PLAN AND RESPIRATOR PLAN FOR APPROVAL PRIOR TO WORK. THE CONTRACTOR SHALL MANAGE ALL EXISTING COATING WASTE IN ACCORDANCE WITH SPECIFICATION 01 57 20.00 10 ENVIRONMENTAL PROTECTION AND SUBMIT A HAZARDOUS WASTE MANAGEMENT PLAN (AS PART OF THE ENVIRONMENTAL PROTECTION PLAN) FOR APPROVAL PRIOR TO WORK.
2. NO TORCH CUTTING OR ABRASIVE GRINDING OF EXISTING PAINTS AND COATINGS IS ALLOWED. REMOVE PAINTS AND COATINGS 6 INCHES TO EITHER SIDE WHERE TORCH CUTTING OR ABRASIVE GRINDING WILL OCCUR.

ASBESTOS

3. EXISTING ELEVATOR DOORS ARE ASSUMED TO BE ACM. ALTERATION OF ELEVATOR DOORS SHALL BE IN ACCORDANCE WITH FEDERAL, STATE, AND LOCAL REQUIREMENTS.

High Bays 3: Asbestos Bulk Sample Laboratory Analysis Summary
Elevator Landing Platform

HMID	Homogeneous Material Description	Sample Locations	Sample Numbers	Asbestos (Yes/No)	Friable (Yes/No)	Type	% & Type Asbestos
MO56	**Miscellaneous Material (Elevator Door) Mudded Insulation inside door**	**A Tower Elevator Door**	**J2839**	**Yes**	**Yes**	**Misc**	60% Chrysotile

Note: Analysis results based on historical data from the AMIS database system and site walk down of anticipated work areas.

IMAGES OF HOMOGENEOUS MATERIALS CONTAINING HAZARDOUS METALS AND POLYCHLORINATED BYPHENOLS IDENTIFIED BY HMID

HMP-01 NON-SKID PLATFORM FLOOR COATINGS

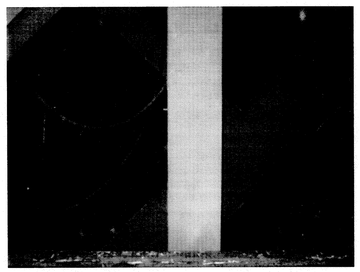
HMP-03 GREY VERTICAL BEAM COATINGS

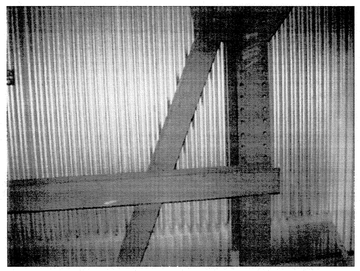
HMP-04 GREY HORIZONTAL BEAM COATINGS

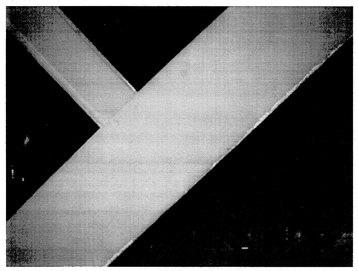
HMP-05 GREY CROSS BEAM COATINGS

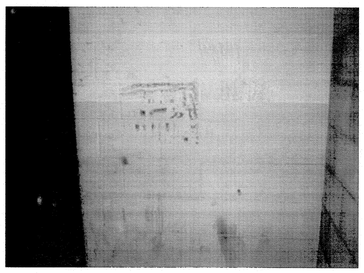
HMP-09 BLOCK WALL COATINGS

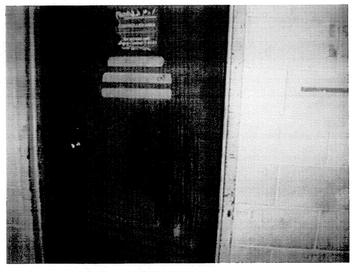
HMP-10 METAL DOOR COATINGS

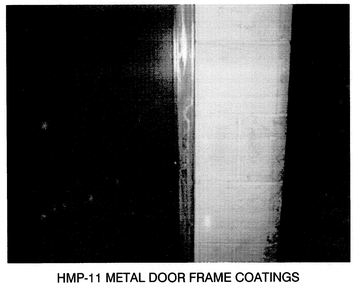
HMP-11 METAL DOOR FRAME COATINGS

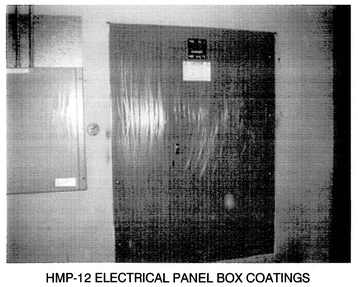
HMP-12 ELECTRICAL PANEL BOX COATINGS

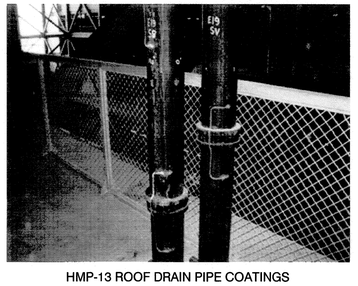
HMP-13 ROOF DRAIN PIPE COATINGS

IMAGE OF HOMOGENEOUS ASBESTOS CONTAINING MATERIALS IDENTIFIED BY HMID

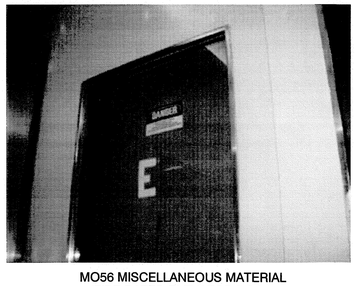

MO56 MISCELLANEOUS MATERIAL
(FIRE RATED ELEVATOR DOOR)
MUDDED INSULATION INSIDE DOOR

SYM	ZONE	DESCRIPTION	DATE	APPROVAL
		REVISIONS		

RS&H IMPROVING YOUR WORLD
Reynolds, Smith and Hills, Inc.
115 Alma Blvd, Suite 101
Merritt Island, Florida 32953-4101
(321) 453-0212 (321) 453-0223 FAX
www.rsandh.com

SIGNATURES		DATE
DRAWN:	SCOTT VOCKELL	08-20-2013
CHECKED:	ROBERT PRUSS	08-20-2013
SUBMITTED: ARCHITECT OF RECORD	ROBERT PRUSS	8/20/2013
ST OF LICENSURE: FL LICENSE NO: 72350		
APPROVED:	JOHN KERCSMAR FOR	8.20.13
	MIKE HARTNETT	11/5/13

NATIONAL AERONAUTICS AND SPACE ADMINISTRATION
JOHN F. KENNEDY SPACE CENTER, NASA
KENNEDY SPACE CENTER, FLORIDA

LAUNCH COMPLEX 39
VEHICLE ASSEMBLY BUILDING

MODIFY VEHICLE ASSEMBLY BUILDING HIGH BAY 3 FOR SLS – ELEVATOR LANDINGS METALS, PCBS, AND ASBESTOS SCHEDULES AND NOTES

FILE NO.	SIZE	DWG. NO.	REV
302-6058-043	E	79K39665	
PROJ. NO. PCN 99000.5	SHEET 5 OF		

WHEN PRINTED FULL SIZE, THIS SHEET IS 34"X44"
THIS COMPUTER DRAWING WAS
CREATED IN AUTOCAD AND
FILED UNDER THE DRAWING NUMBER

EN-001

NOTICE — WHEN GOVERNMENT DRAWINGS, SPECIFICATIONS, OR OTHER DATA ARE USED FOR ANY PURPOSE OTHER THAN IN CONNECTION WITH A DEFINITELY RELATED GOVERNMENT PROCUREMENT OPERATION, THE UNITED STATES GOVERNMENT THEREBY INCURS NO RESPONSIBILITY NOR ANY OBLIGATION WHATSOEVER; AND THE FACT THAT THE GOVERNMENT MAY HAVE FORMULATED, FURNISHED, OR IN ANY WAY SUPPLIED THE SAID DRAWINGS, SPECIFICATIONS OR ANY OTHER DATA IS NOT TO BE REGARDED BY IMPLICATION OR OTHERWISE IN ANY MANNER LICENSING THE HOLDER OR ANY OTHER PERSON OR CORPORATION, OR CONVEYING ANY RIGHTS OR PERMISSION TO MANUFACTURE, USE, OR SELL ANY PATENTED INVENTION THAT IN ANY WAY BE RELATED THERETO.

ARCHITECTURAL SYMBOLS LEGEND

(XX)	NEW DOOR, NUMBER
	DENOTES MATERIAL, STEEL, IN SECTION
VIF	VERIFY IN FIELD
REF	REFERENCE
QTY	QUANTITY
	NEW DOOR OR GATE
	DENOTES AREA FOR DEMOLITION
	HDG GRATING
NIC	NOT IN CONTRACT
FAC	FACTORY
	EXISTING GRATING/CATWALK
1	SIGN TYPE INDICATOR

GENERAL NOTES:

1. REFER TO STRUCTURAL, MECHANICAL AND ELECTRICAL SHEETS FOR ADDITIONAL INFORMATION.
2. DO NOT SCALE DRAWINGS. IF DIMENSIONS ARE IN QUESTION, OBTAIN CLARIFICATION OF AREA IN QUESTION.
3. REFER TO SPECIFICATIONS SECTION 09 97 13.00 98 FOR STEEL COATINGS. QUALITY CONTROL SHALL BE PERFORMED BY AN INDEPENDENT NACE CERTIFIED COATING INSPECTOR LEVEL 3 PROVIDED BY THE GENERAL CONTRACTOR.
4. ISOLATE DISSIMILAR METALS SUCH AS ALUMINUM AND STAINLESS STEEL WITH TEFLON LINER OR TEFLON COATING, DEPENDING ON TYPE OF ASSEMBLY.

SIGNAGE

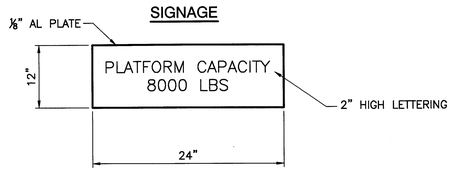

1 SIGNAGE TYPE 1 – SEE A–100 FOR LOCATION

CODE SUMMARY:

VAB HB3 MODIFICATIONS FOR SLS DESIGN

PROJECT SUMMARY

PROJECT SCOPE INCLUDES THE FOLLOWING MAIN ITEMS:

- RENOVATION OF EXISTING ELEVATOR LANDINGS IN THE VAB – HB–3.
- CONSTRUCTION OF NEW ELEVATOR LANDINGS ON THE FLOORS SHOWN IN THE VAB – HB–3.
- INSTALLATION OF GUARDRAILS AT BOTH NEW AND EXISTING ELEVATOR LANDINGS.
- INSTALLATION OF NEW LIGHTING STANCHIONS ON NEW ELEVATOR PLATFORMS.
- INSTALLATION OF NEW ELEVATOR DOORS ON NEW ELEVATOR PLATFORMS.
- INSTALLATION OF STRUCTURAL FRAMING FOR NEW ELEVATOR PLATFORMS.
- MODIFICATION OF STRUCTURAL FRAMING FOR EXISTING ELEVATOR PLATFORMS.
- ELECTRICAL OUTLETS AND CONTROLS FOR ELEVATOR PLATFORMS. (SEE ELECTRICAL DRAWINGS)

APPLICABLE CODES

NFPA 101 LIFE SAFETY CODE 2012

OSHA OCCUPATIONAL SAFETY AND HEALTH ADMINISTRATION – DEPARTMENT OF LABOR STANDARD 29 CFR 1910

CONSTRUCTION TYPE

VAB – VEHICLE ASSEMBLY BUILDING EXISTING TYPE II UNPROTECTED

BUILDING USE CATEGORY

VAB IS CONSIDERED A SPECIAL PURPOSE INDUSTRIAL OCCUPANCY WITH INCIDENTAL HIGH HAZARD OPERATIONS

ELEVATOR

THE AHJ HAS INDICATED THAT THE EXISTING ELEVATOR CANNOT SERVE AS A MEANS OF EGRESS. THE EXISTING ELEVATORS ARE NOT LOCATED WITHIN A 2 HR. RATED SHAFT.

GUARDRAILS

GUARDRAILS 42" HIGH ARE REQUIRED AT THE OPEN SIDES OF EGRESS THAT EXCEED 30" ABOVE THE FLOOR OR GROUND LEVEL

GUARDRAILS

42" IN HEIGHT, PIPE RAILINGS 1 1/2" NOMINAL DIAMETER WITH POSTS SPACED NOT MORE THAN 5'–0" OC

TOE BOARD 4" IN HT. NOT MORE THAN 1/4" CLEARANCE ABOVE FLOOR LEVEL

ALL GUARDRAILS ARE TO HAVE AN INTERMEDIATE RAIL MOUNTED AT THE MID–POINT OF THE HEIGHT OF THE GUARDRAIL PER 29 CFR 1910.23 (e)

WHEN PRINTED FULL SIZE, THIS SHEET IS 34"X44"
THIS COMPUTER DRAWING WAS CREATED IN AUTOCAD AND FILED UNDER THE DRAWING NUMBER

A–001

SYM	ZONE	DESCRIPTION	DATE	APPROVAL
		REVISIONS		

RS&H IMPROVING YOUR WORLD
Reynolds, Smith and Hills, Inc.
115 Alma Blvd, Suite 101
Merritt Island, Florida 32953-4101
(321) 453-0212 (321) 453-0223 FAX
www.rsandh.com

SIGNATURES	DATE
DRAWN: BRIAN CURTIS	08-20-2013
CHECKED: ALICE SCHULTZ	08-20-2013
SUBMITTED: ARCHIVING OF RECORD TONY MAZZA	08-20-2013
ST OF LICENSURE: FL	
LICENSE NO: PE 0016930	
APPROVED: JOHN KERKSMAR	8.20.13
MIKE HARTNETT	11/5/13

NATIONAL AERONAUTICS AND SPACE ADMINISTRATION
JOHN F. KENNEDY SPACE CENTER, NASA
KENNEDY SPACE CENTER, FLORIDA

LAUNCH COMPLEX 39
VEHICLE ASSEMBLY BUILDING

MODIFY VEHICLE ASSEMBLY BUILDING HIGH BAY 3 FOR SLS – ELEVATOR LANDINGS ABBREVIATIONS, SYMBOLS AND GENERAL NOTES

FILE NO.	SIZE	DWG. NO.	REV
302-6058-043	E	79K39665	

PROJ. NO. PCN 99000.5 SHEET 6 OF

NOTICE — WHEN GOVERNMENT DRAWINGS, SPECIFICATIONS, OR OTHER DATA ARE USED FOR ANY PURPOSE OTHER THAN IN CONNECTION WITH A DEFINITELY RELATED GOVERNMENT PROCUREMENT OPERATION, THE UNITED STATES GOVERNMENT INCURS NO RESPONSIBILITY NOR ANY OBLIGATION WHATSOEVER; AND THE FACT THAT THE GOVERNMENT MAY HAVE FORMULATED, FURNISHED, OR IN ANY WAY SUPPLIED THE SAID DRAWINGS, SPECIFICATIONS OR ANY OTHER DATA IS NOT TO BE REGARDED BY IMPLICATION OR OTHERWISE IN ANY MANNER LICENSING THE HOLDER OR ANY OTHER PERSONS OR CORPORATION, OR CONVEYING ANY RIGHTS OR PERMISSION TO MANUFACTURE, USE, OR SELL ANY PATENTED INVENTION THAT IN ANY WAY BE RELATED THERETO.

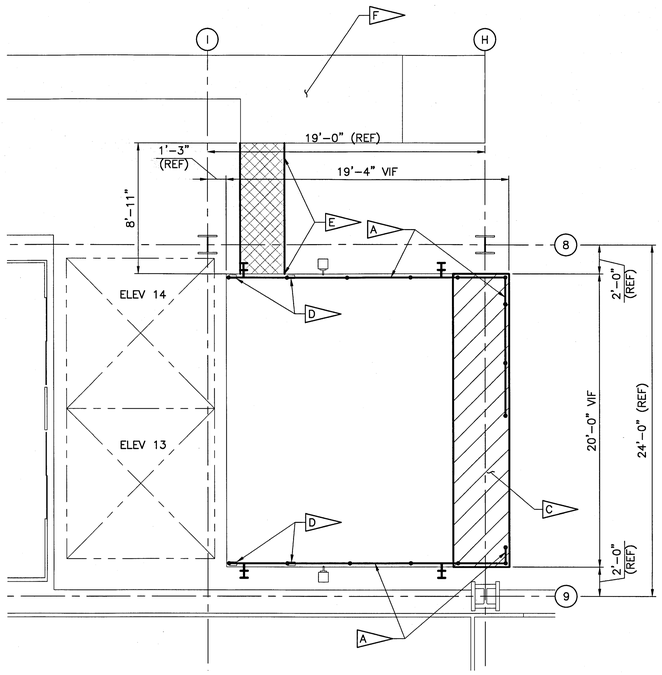

EXISTING ELEVATOR LANDING PLATFORMS TO BE MODIFIED - LEVEL 7 - TOWER E
SCALE: 1/4" = 1'-0"

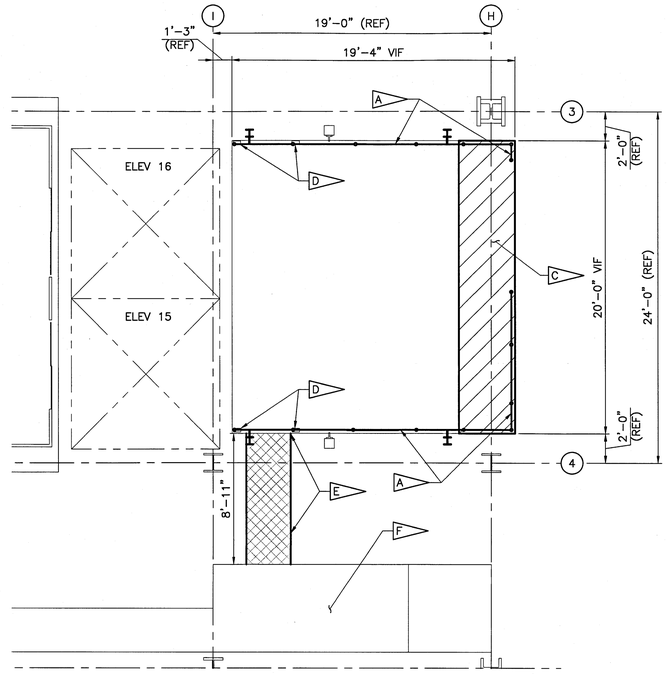

EXISTING ELEVATOR LANDING PLATFORMS TO BE MODIFIED - LEVEL 7 - TOWER F
SCALE: 1/4" = 1'-0"

SPECIFIC NOTES:

- A — REMOVE EXISTING GUARDRAIL IN ITS ENTIRETY.
- B — REMOVE EXISTING STEEL STAIRS, ASSOCIATED HANDRAILS AND SUPPORT STEEL.
- C — REMOVE PORTION OF EXISTING ELEVATOR LANDING, SEE STRUCTURAL DRAWING S-600.
- D — EXISTING LIGHTING STANCHIONS TO REMAIN.
- E — REMOVE EXISTING STEEL CATWALK.
- F — EXISTING CATWALK TO REMAIN.

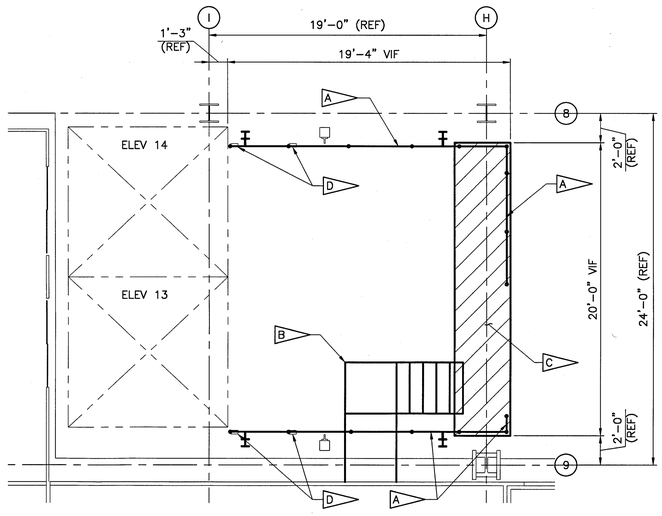

EXISTING ELEVATOR LANDING PLATFORMS TO BE MODIFIED - LEVEL 11 - TOWER E
SCALE: 1/4" = 1'-0"

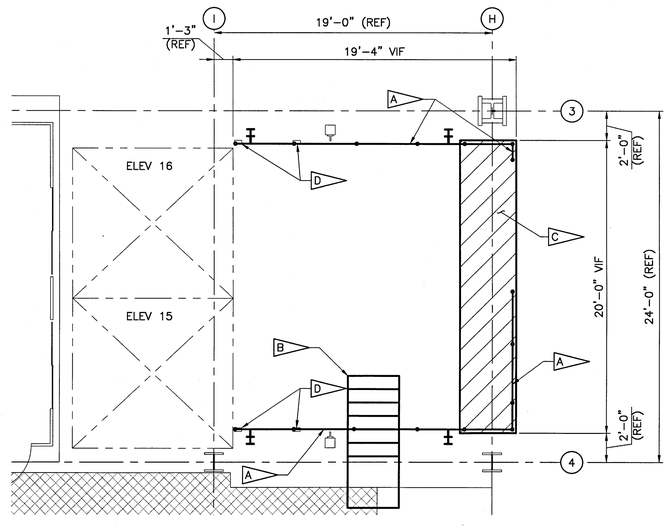

EXISTING ELEVATOR LANDING PLATFORMS TO BE MODIFIED - LEVEL 11 - TOWER F
SCALE: 1/4" = 1'-0"

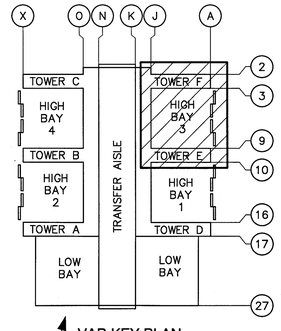

VAB KEY PLAN
SCALE: NTS

2 1 0 2 4 6 8 10
1/4 IN = 1 FT

WHEN PRINTED FULL SIZE, THIS SHEET IS 34"X44"
THIS COMPUTER DRAWING WAS CREATED IN AUTOCAD AND FILED UNDER THE DRAWING NUMBER

AD-100

SYM	ZONE	DESCRIPTION	DATE	APPROVAL
		REVISIONS		

RS&H IMPROVING YOUR WORLD
Reynolds, Smith and Hills, Inc.
115 Alma Blvd, Suite 101
Merritt Island, Florida 32953-4101
(321) 453-0212 (321) 453-0223 FAX
www.rsandh.com

SIGNATURES	DATE
DRAWN: BRIAN CURTIS	08-20-2013
CHECKED: ALICE SCHULTZ	08-20-2013
SUBMITTED: ARCHITENG OF RECORD TONY MAZZA	08-20-2013
ST OF LICENSURE: FL LICENSE NO: AR0016950	
APPROVED: JOHN KOKOSAR for	8.20.13
MIKE HARTNETT	8/15/13

NATIONAL AERONAUTICS AND SPACE ADMINISTRATION
JOHN F. KENNEDY SPACE CENTER, NASA
KENNEDY SPACE CENTER, FLORIDA

LAUNCH COMPLEX 39
VEHICLE ASSEMBLY BUILDING

MODIFY VEHICLE ASSEMBLY BUILDING HIGH BAY 3 FOR SLS – ELEVATOR LANDINGS ELEVATOR LANDING DEMOLITION PLANS –1

FILE NO.	SIZE	DWG. NO.	REV
302-6058-043	E	79K39665	

PROJ. NO. PCN 99000.5 SHEET 7 OF

NOTICE — WHEN GOVERNMENT DRAWINGS, SPECIFICATIONS, OR OTHER DATA ARE USED FOR ANY PURPOSE OTHER THAN IN CONNECTION WITH A DEFINITELY RELATED GOVERNMENT PROCUREMENT OPERATION, THE UNITED STATES GOVERNMENT THEREBY INCURS NO RESPONSIBILITY NOR ANY OBLIGATION WHATSOEVER; AND THE FACT THAT THE GOVERNMENT MAY HAVE FORMULATED, FURNISHED, OR IN ANY WAY SUPPLIED THE SAID DRAWINGS, SPECIFICATIONS, OR OTHER DATA IS NOT TO BE REGARDED BY IMPLICATION OR OTHERWISE IN ANY MANNER LICENSING THE HOLDER OR ANY OTHER PERSON OR CORPORATION, OR CONVEYING ANY RIGHTS OR PERMISSION TO MANUFACTURE, USE, OR SELL ANY PATENTED INVENTION THAT IN ANY WAY BE RELATED THERETO.

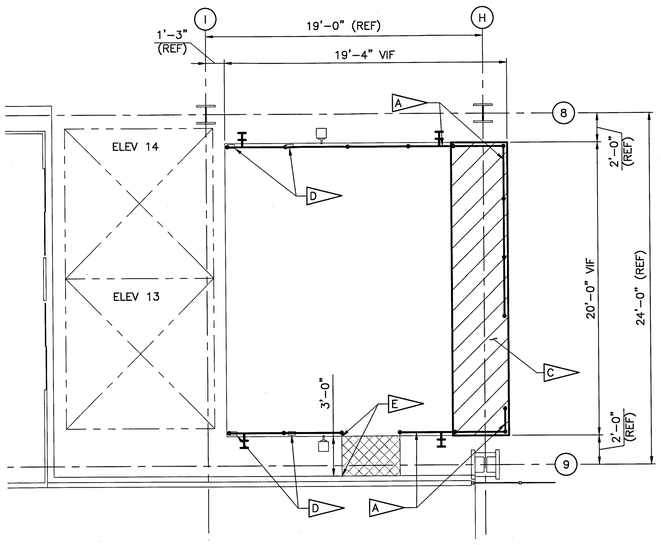

EXISTING ELEVATOR LANDING PLATFORM TO BE MODIFIED - LEVEL 14 - TOWER E
SCALE: 1/4" = 1'-0"

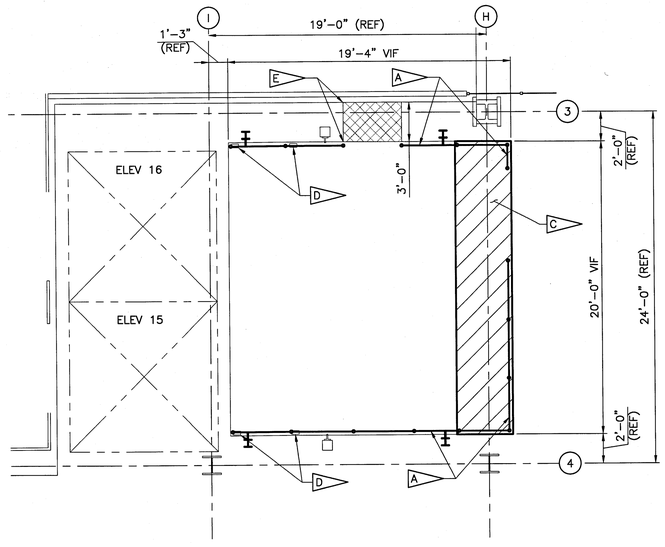

EXISTING ELEVATOR LANDING PLATFORM TO BE MODIFIED - LEVEL 14 - TOWER F
SCALE: 1/4" = 1'-0"

SPECIFIC NOTES:

- A — REMOVE EXISTING GUARDRAIL IN ITS ENTIRETY.
- B — REMOVE EXISTING STEEL STAIRS, ASSOCIATED HANDRAILS AND SUPPORT STEEL.
- C — REMOVE PORTION OF EXISTING ELEVATOR LANDING, SEE STRUCTURAL DRAWING S-600.
- D — EXISTING LIGHTING STANCHIONS TO REMAIN.
- E — REMOVE EXISTING STEEL CATWALK.

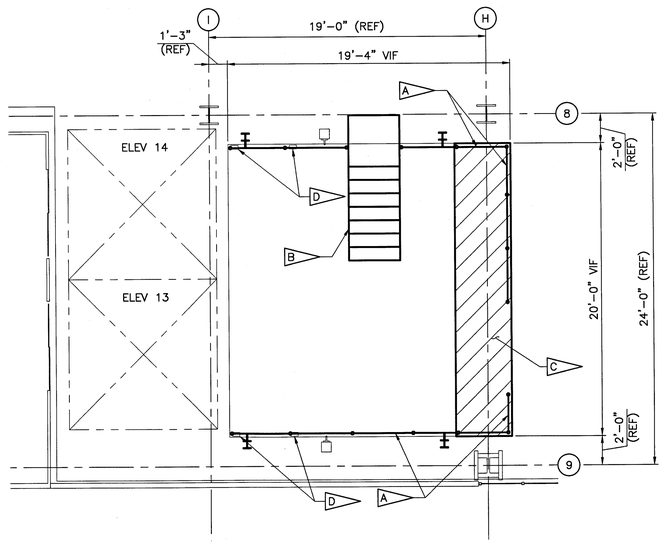

EXISTING ELEVATOR LANDING PLATFORM TO BE MODIFIED - LEVEL 19 - TOWER E
SCALE: 1/4" = 1'-0"

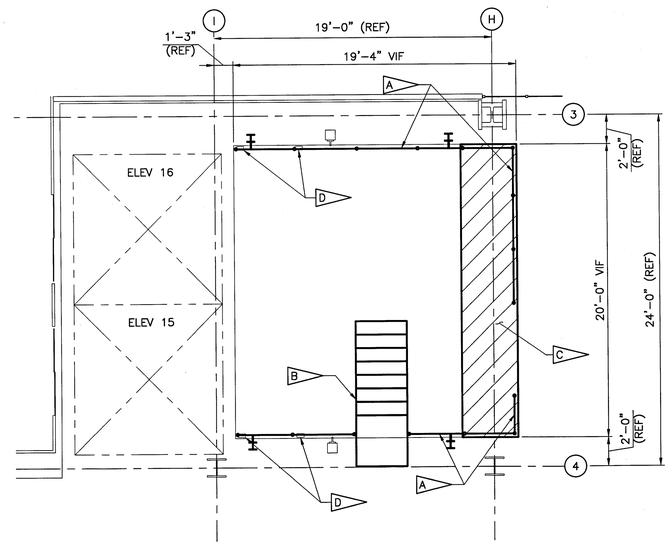

EXISTING ELEVATOR LANDING PLATFORM TO BE MODIFIED - LEVEL 19 - TOWER F
SCALE: 1/4" = 1'-0"

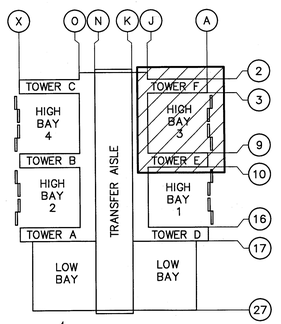

VAB KEY PLAN
SCALE: NTS

2 1 0 2 4 6 8 10
1/4 IN = 1 FT

WHEN PRINTED FULL SIZE, THIS SHEET IS 34"X44"
THIS COMPUTER DRAWING WAS
CREATED IN AUTOCAD AND
FILED UNDER THE DRAWING NUMBER

AD-101

SYM	ZONE	DESCRIPTION	DATE	APPROVAL
		REVISIONS		

RS&H IMPROVING YOUR WORLD
Reynolds, Smith and Hills, Inc.
115 Alma Blvd, Suite 101
Merritt Island, Florida 32953-4101
(321) 453-0212 (321) 453-0223 FAX
www.rsandh.com

SIGNATURES	DATE
DRAWN: BRIAN CURTIS	08-20-2013
CHECKED: ALICE SHULTZ	08-20-2013
SUBMITTED: ARCHENG OF RECORD TONY MAZZA	08-20-2013
ST OF LICENSURE: FL	
LICENSE NO: ####	
APPROVED: JOHN KERSMAR FOR	8.20.13
MIKE HARTNETT	11/5/13

NATIONAL AERONAUTICS AND SPACE ADMINISTRATION
JOHN F. KENNEDY SPACE CENTER, NASA
KENNEDY SPACE CENTER, FLORIDA

LAUNCH COMPLEX 39
VEHICLE ASSEMBLY BUILDING

MODIFY VEHICLE ASSEMBLY BUILDING HIGH BAY 3 FOR SLS – ELEVATOR LANDINGS ELEVATOR LANDING DEMOLITION PLANS –2

FILE NO.	SIZE	DWG. NO.	REV
302-6058-043	E	79K39665	

PROJ. NO. PCN 99000.5 SHEET 8 OF

NOTICE — WHEN GOVERNMENT DRAWINGS, SPECIFICATIONS, OR OTHER DATA ARE USED FOR ANY PURPOSE OTHER THAN IN CONNECTION WITH A DEFINITELY RELATED GOVERNMENT PROCUREMENT OPERATION, THE UNITED STATES GOVERNMENT THEREBY INCURS NO RESPONSIBILITY NOR ANY OBLIGATION WHATSOEVER; AND THE FACT THAT THE GOVERNMENT MAY HAVE FORMULATED, FURNISHED, OR IN ANY WAY SUPPLIED THE SAID DRAWINGS, SPECIFICATIONS OR ANY OTHER DATA IS NOT TO BE REGARDED BY IMPLICATION OR OTHERWISE IN ANY MANNER LICENSING THE HOLDER OR ANY OTHER PERSONS OR CORPORATION, OR CONVEYING ANY RIGHTS OR PERMISSION TO MANUFACTURE, USE, OR SELL ANY PATENTED INVENTION THAT IN ANY WAY BE RELATED THERETO.

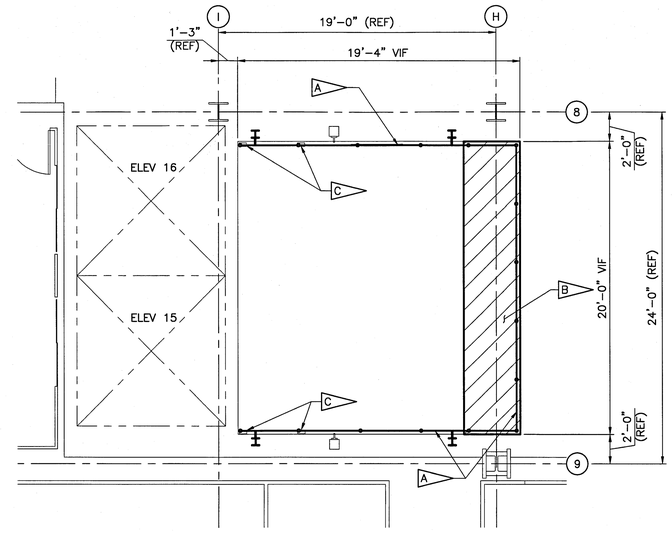

EXISTING ELEVATOR LANDING PLATFORM TO BE MODIFIED - LEVEL 10 - TOWER E
SCALE: 1/4" = 1'-0"

SPECIFIC NOTES:

- A — REMOVE EXISTING GUARDRAIL IN ITS ENTIRETY.
- B — REMOVE PORTION OF EXISTING ELEVATOR LANDING, SEE STRUCTURAL DRAWING S-600.
- C — EXISTING LIGHTING STANCHIONS TO REMAIN.

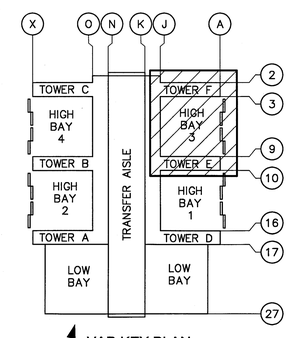

VAB KEY PLAN
SCALE: NTS

2 1 0 2 4 6 8 10
1/4 IN = 1 FT

WHEN PRINTED FULL SIZE, THIS SHEET IS 34"X44"
THIS COMPUTER DRAWING WAS
CREATED IN AUTOCAD AND
FILED UNDER THE DRAWING NUMBER

AD-102

SYM	ZONE	DESCRIPTION	DATE	APPROVAL

REVISIONS

RS&H IMPROVING YOUR WORLD
Reynolds, Smith and Hills, Inc.
115 Alma Blvd, Suite 101
Merritt Island, Florida 32953-4101
(321) 453-0212 (321) 453-0223 FAX
www.rsandh.com

SIGNATURES		DATE
DRAWN:	BRIAN CURTIS	08-20-2013
CHECKED:	ALICE SCHULTZ	08-20-2013
SUBMITTED: ARCHIVING OF RECORD	TONY MAZZA	8-20-2013
ST OF LICENSURE: FL	LICENSE NO. AR0016950	
APPROVED:	JOHN KERESMAR FOR	8.20.13
	MIKE HARTNETT	11/5/13

NATIONAL AERONAUTICS AND SPACE ADMINISTRATION
JOHN F. KENNEDY SPACE CENTER, NASA
KENNEDY SPACE CENTER, FLORIDA

LAUNCH COMPLEX 39
VEHICLE ASSEMBLY BUILDING
MODIFY VEHICLE ASSEMBLY BUILDING HIGH BAY 3 FOR SLS – ELEVATOR LANDINGS
ELEVATOR LANDING
DEMOLITION PLANS –3

FILE NO.	SIZE	DWG. NO.	REV
302-6058-043	E	79K39665	

PROJ. NO. PCN 99000.5 SHEET 9 OF

NOTICE — WHEN GOVERNMENT DRAWINGS, SPECIFICATIONS, OR OTHER DATA ARE USED FOR ANY PURPOSE OTHER THAN IN CONNECTION WITH A DEFINITELY RELATED GOVERNMENT PROCUREMENT OPERATION, THE UNITED STATES GOVERNMENT INCURS NO RESPONSIBILITY NOR ANY OBLIGATION WHATSOEVER; AND THE FACT THAT THE GOVERNMENT MAY HAVE FORMULATED, FURNISHED, OR IN ANY WAY SUPPLIED THE SAID DRAWINGS, SPECIFICATIONS OR ANY OTHER DATA IS NOT TO BE REGARDED BY IMPLICATION OR OTHERWISE IN ANY MANNER LICENSING THE HOLDER OR ANY OTHER PERSONS OR CORPORATION, OR CONVEYING ANY RIGHTS OR PERMISSION TO MANUFACTURE, USE, OR SELL ANY PATENTED INVENTION THAT IN ANY WAY BE RELATED THERETO.

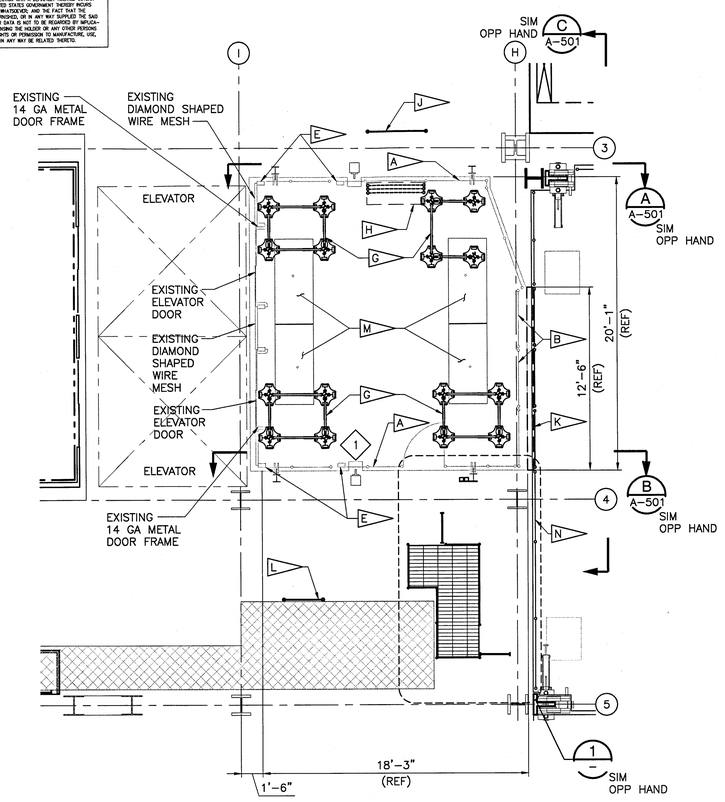

EXISTING LEVELS – 7F, 11F, 14F & 19F
(SEE TABLE FOR NEW LOCATIONS)

EXISTING ELEVATOR LANDING PLATFORMS TO BE MODIFIED - TOWER F

SCALE: 1/4" = 1'-0"

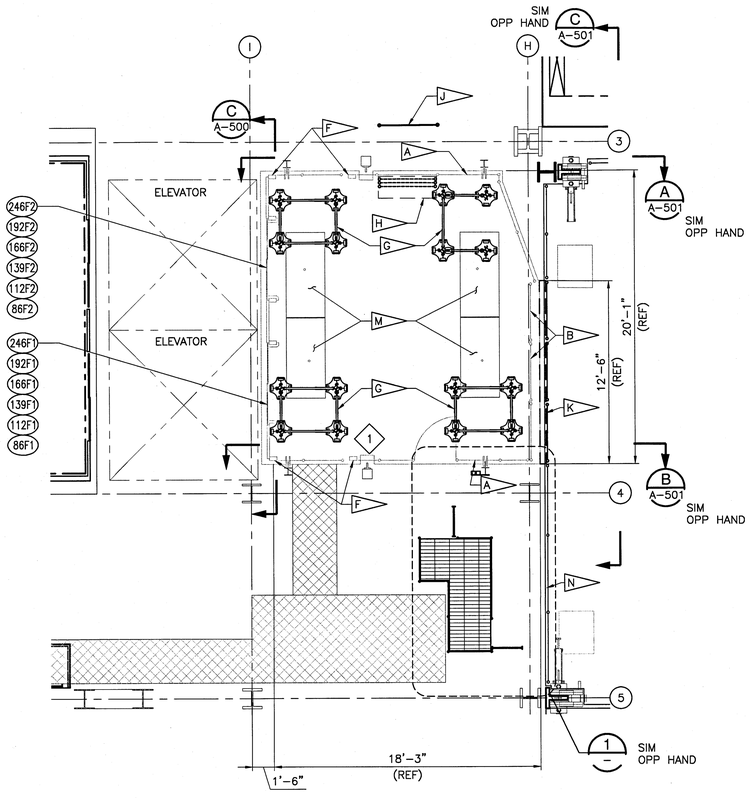

NEW ELEVATOR LANDING PLATFORMS - TOWER F

SCALE: 1/4" = 1'-0"

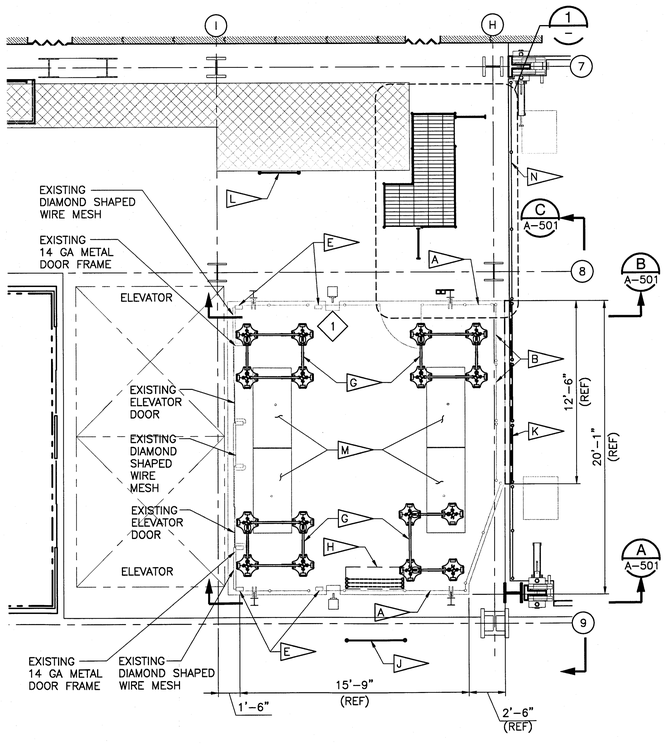

EXISTING LEVELS – 7E, 10E, 11E, 14E & 19E
(SEE TABLE FOR NEW LOCATIONS)

EXISTING ELEVATOR LANDING PLATFORMS TO BE MODIFIED - TOWER E

SCALE: 1/4" = 1'-0"

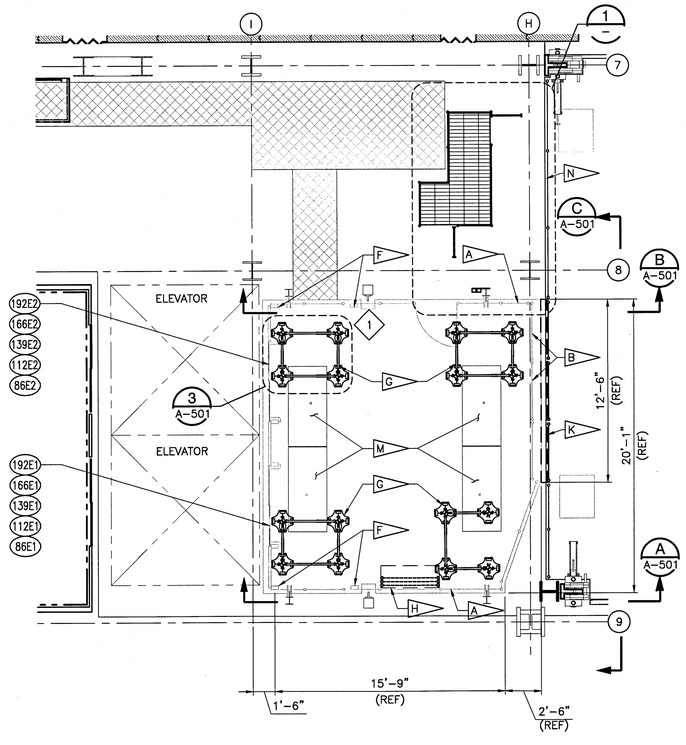

NEW ELEVATOR LANDING PLATFORMS - TOWER E

SCALE: 1/4" = 1'-0"

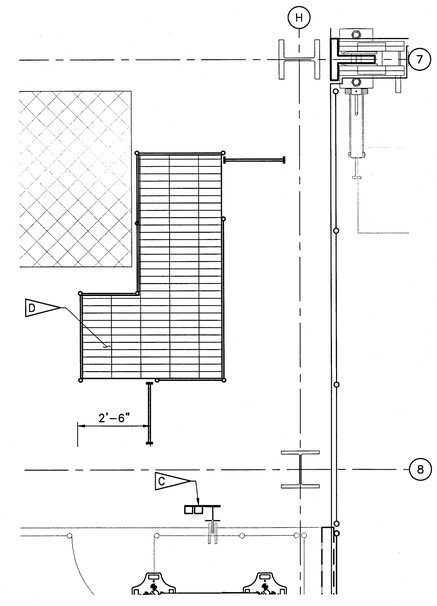

ELEVATOR LANDING PLATFORM ACCESS FLIP PLATFORM (NIC)

SCALE: 1/2" = 1'-0"

SPECIFIC NOTES:

- A — PROVIDE FIXED GUARDRAIL. SEE A–501.
- B — PROVIDE REMOVABLE GUARDRAIL. SEE A–501.
- C — ELECTRICAL INTERFACE PANEL.
- D — NEW CATWALK WITH LADDERS INSTALLED IN FUTURE DESIGN. (NIC)
- E — EXISTING LIGHTING STANCHIONS TO REMAIN.
- F — PROVIDE LIGHTING STANCHIONS, SEE STRUCTURAL DRAWING S–600.
- G — PORTABLE REMOVABLE GUARDRAIL.
- H — STACK 3 SECTIONS OF REMOVABLE GUARDRAIL AND STRAP TO FIXED STEEL GUARDRAIL FOR STORAGE.
- J — INSTALL STEEL GUARDRAIL (3'–6" H x 4'–0" W) IN LOCATION SHOWN ON DEMOLITION DRAWINGS (SHEET AD–100) WHERE STAIR IS TO BE DEMOLISHED AT LEVELS 11E, 11F, 19E AND 19F.
- K — FLIP PLATFORM, SEE STRUCTURAL DRAWINGS.
- L — INSTALL STEEL GUARDRAIL (3'–6" H x 4'–0" W) AT LEVELS 7E AND 7F WHERE EXISTING CATWALK HAS BEEN REMOVED.
- M — HATCHES – SEE DETAILS 8 AND 9 ON S–602.
- N — EXTENSIBLE PLATFORMS GUARDRAIL.

ELEVATOR LANDING PLATFORMS TABLE

EXISTING ELEVATOR PLATFORM LANDINGS	NEW LOCATION
7E	ELEVATION 346' E TOWER
10E	ELEVATION 311' E TOWER
11E	ELEVATION 280' E TOWER
14E	ELEVATION 264' E TOWER
19E	ELEVATION 246' E TOWER
7F	ELEVATION 346' F TOWER
11F	ELEVATION 311' F TOWER
14F	ELEVATION 280' F TOWER
19F	ELEVATION 264' F TOWER
NEW ELEVATOR PLATFORM LANDINGS	NEW LOCATION
	ELEVATION 192' E TOWER
	ELEVATION 166' E TOWER
	ELEVATION 139' E TOWER
	ELEVATION 112' E TOWER
	ELEVATION 86' E TOWER
	ELEVATION 246' F TOWER
	ELEVATION 192' F TOWER
	ELEVATION 166' F TOWER
	ELEVATION 139' F TOWER
	ELEVATION 112' F TOWER
	ELEVATION 86' F TOWER

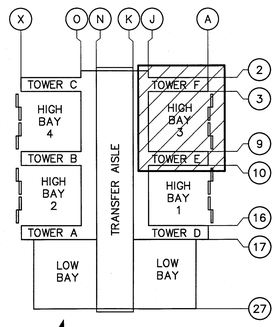

VAB KEY PLAN

SCALE: NTS

1 6" 0 1 2 3 4 5
1/2 IN = 1 FT

2 1 0 2 4 6 8 10
1/4 IN = 1 FT

WHEN PRINTED FULL SIZE, THIS SHEET IS 34"X44"
THIS COMPUTER DRAWING WAS
CREATED IN AUTOCAD AND
FILED UNDER THE DRAWING NUMBER

A–100

SYM	ZONE	DESCRIPTION	DATE	APPROVAL
		REVISIONS		

RS+H IMPROVING YOUR WORLD
Reynolds, Smith and Hills, Inc.
115 Alma Blvd, Suite 101
Merritt Island, Florida 32953-4101
(321) 453-0212 (321) 453-0223 FAX
www.rsandh.com

SIGNATURES	DATE
DRAWN: BRIAN CURTIS	08-20-2013
CHECKED: ALICE SCHULTZ	08-20-2013
SUBMITTED: ARCHENG OF RECORD TONY MAZZA	08-20-2013
ST OF LICENSURE: FL	
LICENSE NO: AR.0016950	
APPROVED: JOHN KENCSWIE	8.2013
MIKE HARTNETT	11/5/13

NATIONAL AERONAUTICS AND SPACE ADMINISTRATION
JOHN F. KENNEDY SPACE CENTER, NASA
KENNEDY SPACE CENTER, FLORIDA

LAUNCH COMPLEX 39
VEHICLE ASSEMBLY BUILDING
MODIFY VEHICLE ASSEMBLY BUILDING HIGH BAY 3 FOR SLS – ELEVATOR LANDINGS
ELEVATOR LANDING PLATFORMS
TYPICAL PLANS AND DETAILS

FILE NO.	SIZE	DWG. NO.	REV
302-6058-043	E	79K39665	

PROJ. NO. PCN 99000.5 SHEET 10 OF

NOTICE — WHEN GOVERNMENT DRAWINGS, SPECIFICATIONS, OR OTHER DATA ARE USED FOR ANY PURPOSE OTHER THAN IN CONNECTION WITH A DEFINITELY RELATED GOVERNMENT PROCUREMENT OPERATION, THE UNITED STATES GOVERNMENT THEREBY INCURS NO RESPONSIBILITY NOR ANY OBLIGATION WHATSOEVER; AND THE FACT THAT THE GOVERNMENT MAY HAVE FORMULATED, FURNISHED, OR IN ANY WAY SUPPLIED THE SAID DRAWINGS, SPECIFICATIONS OR ANY OTHER DATA, IS NOT TO BE REGARDED BY IMPLICATION OR OTHERWISE IN ANY MANNER LICENSING THE HOLDER OR ANY OTHER PERSON OR CORPORATION, OR CONVEYING ANY RIGHTS OR PERMISSION TO MANUFACTURE, USE, OR SELL ANY PATENTED INVENTION THAT IN ANY WAY BE RELATED THERETO.

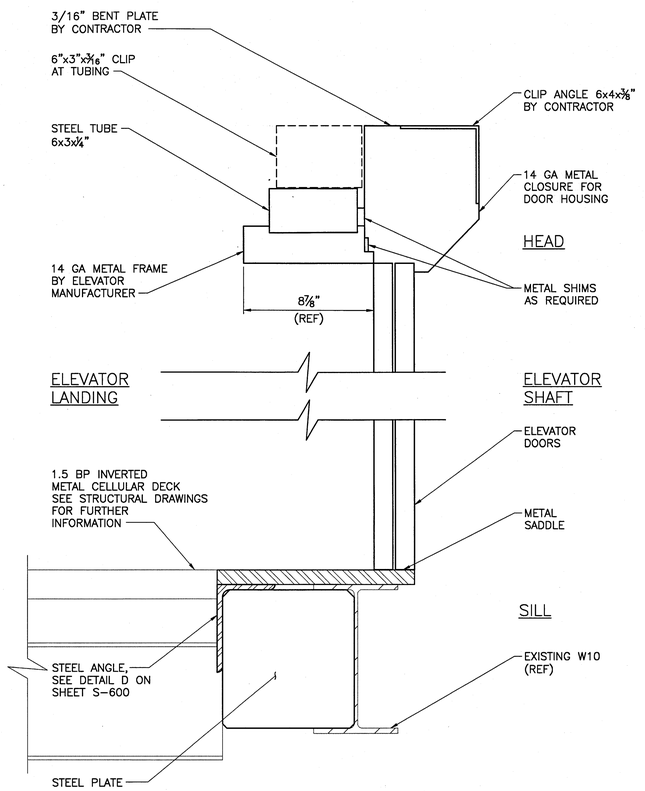

(NEW ELEVATOR LANDINGS ONLY)

HEAD & SILL DETAIL AT ELEVATOR (A)
SCALE: 3" = 1'-0"

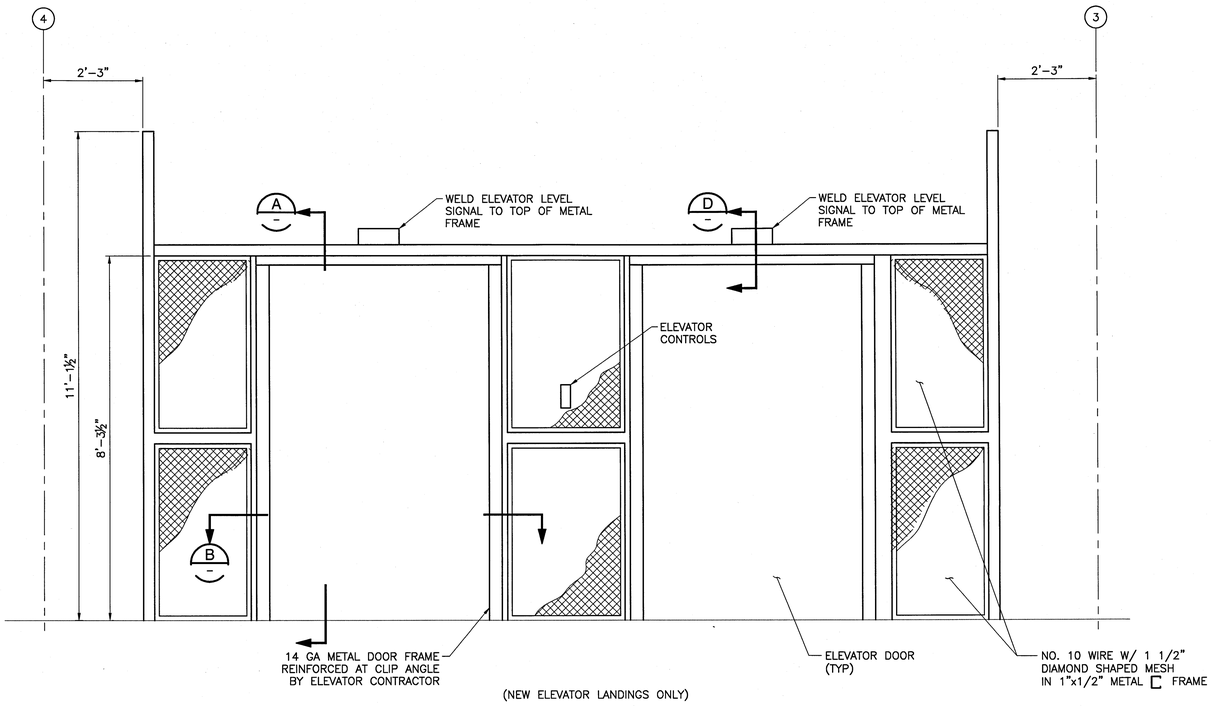

(NEW ELEVATOR LANDINGS ONLY)

ELEVATION AT ELEVATOR DOORS (C)
SCALE: 3/4" = 1'-0"
A-100

DOOR SCHEDULE

DOOR NUMBER	SIZE			DOOR			FRAME			UL LABEL	DETAILS			HDWR GROUP	REMARKS
	WIDTH	HEIGHT	THICK.	TYPE	MAT.	FIN.	TYPE	MAT.	FIN.		HEAD	JAMB	SILL		
246F1	5'-0"	8'-0"	1"	1	B	FAC	1	A	FAC	–	A/A500	B/A500	A/A500	–	SINGLE SIDE PARTING ELEV. DOOR
246F2	5'-0"	8'-0"	1"	1	B	FAC	1	A	FAC	–	A/A500	B/A500	A/A500	–	SINGLE SIDE PARTING ELEV. DOOR
192E1	5'-0"	8'-0"	1"	1	B	FAC	1	A	FAC	–	A/A500	B/A500	A/A500	–	SINGLE SIDE PARTING ELEV. DOOR
192E2	5'-0"	8'-0"	1"	1	B	FAC	1	A	FAC	–	A/A500	B/A500	A/A500	–	SINGLE SIDE PARTING ELEV. DOOR
192F1	5'-0"	8'-0"	1"	1	B	FAC	1	A	FAC	–	A/A500	B/A500	A/A500	–	SINGLE SIDE PARTING ELEV. DOOR
192F2	5'-0"	8'-0"	1"	1	B	FAC	1	A	FAC	–	A/A500	B/A500	A/A500	–	SINGLE SIDE PARTING ELEV. DOOR
166E1	5'-0"	8'-0"	1"	1	B	FAC	1	A	FAC	–	A/A500	B/A500	A/A500	–	SINGLE SIDE PARTING ELEV. DOOR
166E2	5'-0"	8'-0"	1"	1	B	FAC	1	A	FAC	–	A/A500	B/A500	A/A500	–	SINGLE SIDE PARTING ELEV. DOOR
166F1	5'-0"	8'-0"	1"	1	B	FAC	1	A	FAC	–	A/A500	B/A500	A/A500	–	SINGLE SIDE PARTING ELEV. DOOR
166F2	5'-0"	8'-0"	1"	1	B	FAC	1	A	FAC	–	A/A500	B/A500	A/A500	–	SINGLE SIDE PARTING ELEV. DOOR
139E1	5'-0"	8'-0"	1"	1	B	FAC	1	A	FAC	–	A/A500	B/A500	A/A500	–	SINGLE SIDE PARTING ELEV. DOOR
139E2	5'-0"	8'-0"	1"	1	B	FAC	1	A	FAC	–	A/A500	B/A500	A/A500	–	SINGLE SIDE PARTING ELEV. DOOR
139F1	5'-0"	8'-0"	1"	1	B	FAC	1	A	FAC	–	A/A500	B/A500	A/A500	–	SINGLE SIDE PARTING ELEV. DOOR
139F2	5'-0"	8'-0"	1"	1	B	FAC	1	A	FAC	–	A/A500	B/A500	A/A500	–	SINGLE SIDE PARTING ELEV. DOOR
112E1	5'-0"	8'-0"	1"	1	B	FAC	1	A	FAC	–	A/A500	B/A500	A/A500	–	SINGLE SIDE PARTING ELEV. DOOR
112E2	5'-0"	8'-0"	1"	1	B	FAC	1	A	FAC	–	A/A500	B/A500	A/A500	–	SINGLE SIDE PARTING ELEV. DOOR
112F1	5'-0"	8'-0"	1"	1	B	FAC	1	A	FAC	–	A/A500	B/A500	A/A500	–	SINGLE SIDE PARTING ELEV. DOOR
112F2	5'-0"	8'-0"	1"	1	B	FAC	1	A	FAC	–	A/A500	B/A500	A/A500	–	SINGLE SIDE PARTING ELEV. DOOR
86E1	5'-0"	8'-0"	1"	1	B	FAC	1	A	FAC	–	A/A500	B/A500	A/A500	–	SINGLE SIDE PARTING ELEV. DOOR
86E2	5'-0"	8'-0"	1"	1	B	FAC	1	A	FAC	–	A/A500	B/A500	A/A500	–	SINGLE SIDE PARTING ELEV. DOOR
86F1	5'-0"	8'-0"	1"	1	B	FAC	1	A	FAC	–	A/A500	B/A500	A/A500	–	SINGLE SIDE PARTING ELEV. DOOR
86F2	5'-0"	8'-0"	1"	1	B	FAC	1	A	FAC	–	A/A500	B/A500	A/A500	–	SINGLE SIDE PARTING ELEV. DOOR

A. 14 GA METAL DOOR FRAME
B. 14 GA ELEVATOR DOOR

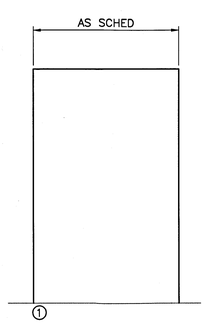

DOOR TYPES
SCALE: 1/2" = 1'-0"

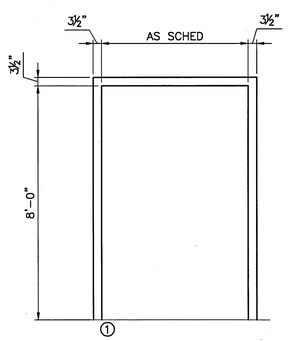

FRAME TYPES
SCALE: 1/2" = 1'-0"

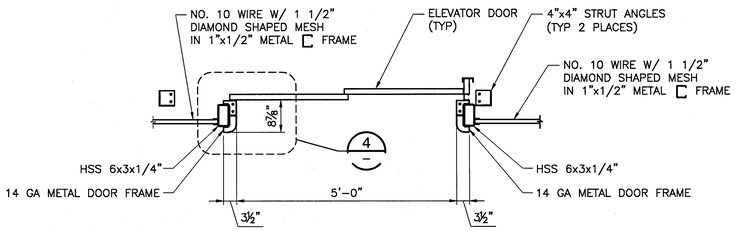

DETAIL AT ELEVATOR DOOR JAMB (B)
SCALE: 3/4" = 1'-0"

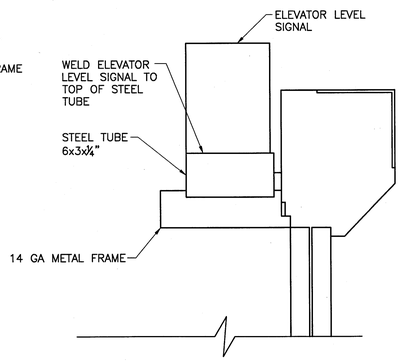

DETAIL AT ELEVATOR LEVEL SIGNAL (D)
SCALE: 3" = 1'-0"

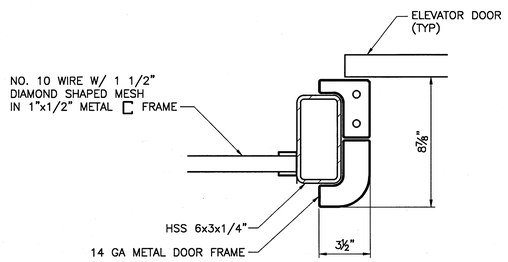

JAMB DETAIL AT ELEVATOR (4)
SCALE: 3" = 1'-0"

1 6" 0 1 2 3 4 5
1/2 IN = 1 FT

1 9"6"3"0 1 2 3
3/4 IN = 1 FT

0 3" 6" 9" 1'
3 IN = 1 FT

WHEN PRINTED FULL SIZE, THIS SHEET IS 34"X44"
THIS COMPUTER DRAWING WAS CREATED IN AUTOCAD AND FILED UNDER THE DRAWING NUMBER

A-500

SYM	ZONE	DESCRIPTION	DATE	APPROVAL
		REVISIONS		

RS&H IMPROVING YOUR WORLD
Reynolds, Smith and Hills, Inc.
115 Alma Blvd, Suite 101
Merritt Island, Florida 32953-4101
(321) 453-0212 (321) 453-0223 FAX
www.rsandh.com

SIGNATURES	DATE
DRAWN: BRIAN CURTIS	08-20-2013
CHECKED: ALICE SCHULTZ	08-20-2013
SUBMITTED, ARCHIVING OF RECORD: TONY MAZZA	08-20-2013
ST OF LICENSURE: FL	
LICENSE NO: PE0016950	
APPROVED: JOHN KERKSMAR FOR	8.20.13
MIKE HARTNETT	11/5/13

NATIONAL AERONAUTICS AND SPACE ADMINISTRATION
JOHN F. KENNEDY SPACE CENTER, NASA
KENNEDY SPACE CENTER, FLORIDA

LAUNCH COMPLEX 39
VEHICLE ASSEMBLY BUILDING

MODIFY VEHICLE ASSEMBLY BUILDING HIGH BAY 3 FOR SLS – ELEVATOR LANDINGS ELEVATOR LANDING PLATFORMS DETAILS AND DOOR SCHEDULE

FILE NO.	SIZE	DWG. NO.	REV
302-6058-043	E	79K39665	

PROJ. NO. PCN 99000.5 SHEET 11 OF

NOTICE — WHEN GOVERNMENT DRAWINGS, SPECIFICATIONS, OR OTHER DATA ARE USED FOR ANY PURPOSE OTHER THAN IN CONNECTION WITH A DEFINITELY RELATED GOVERNMENT PROCUREMENT OPERATION, THE UNITED STATES GOVERNMENT INCURS NO RESPONSIBILITY NOR ANY OBLIGATION WHATSOEVER; AND THE FACT THAT THE GOVERNMENT MAY HAVE FORMULATED, FURNISHED, OR IN ANY WAY SUPPLIED THE SAID DRAWINGS, SPECIFICATIONS OR ANY OTHER DATA IS NOT TO BE REGARDED BY IMPLICATION OR OTHERWISE IN ANY MANNER LICENSING THE HOLDER OF ANY OTHER PERSON OR CORPORATION, OR CONVEYING ANY RIGHTS OR PERMISSION TO MANUFACTURE, USE, OR SELL ANY PATENTED INVENTION THAT IN ANY WAY BE RELATED THERETO.

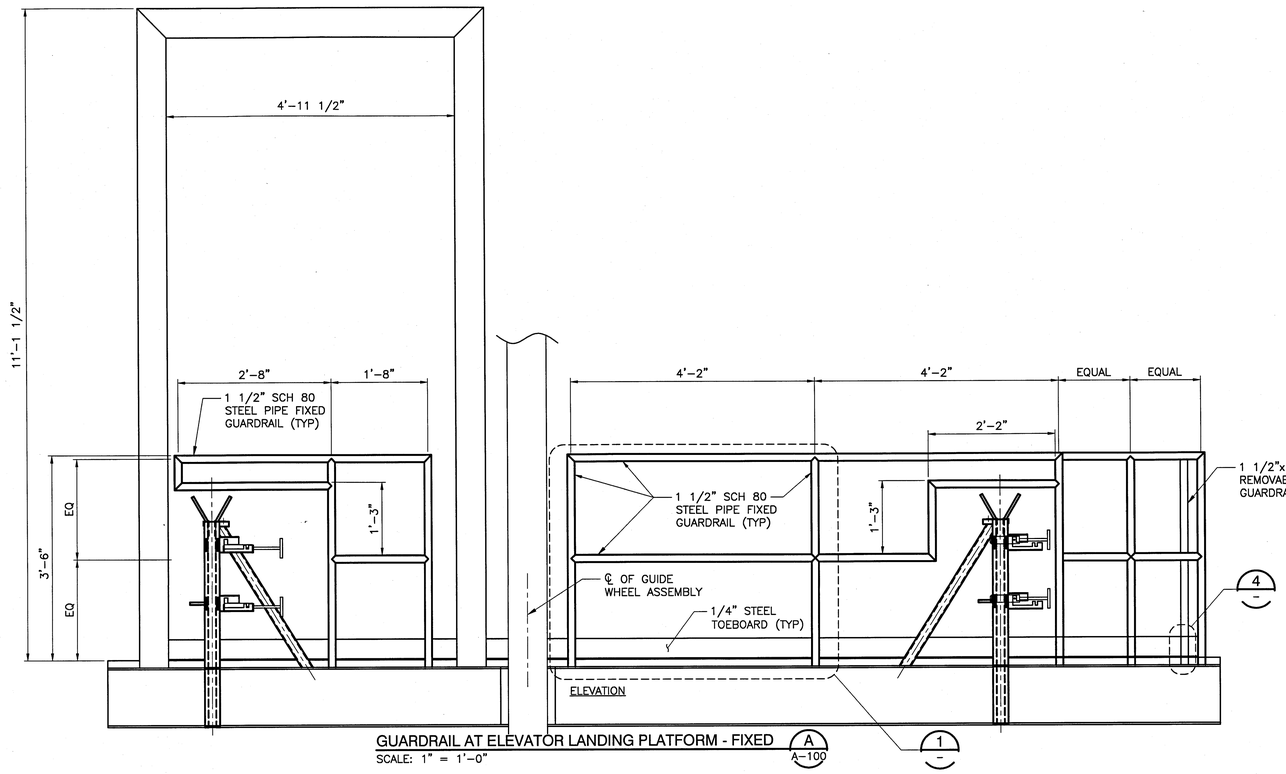

GUARDRAIL AT ELEVATOR LANDING PLATFORM - FIXED (A / A–100)
SCALE: 1" = 1'–0"

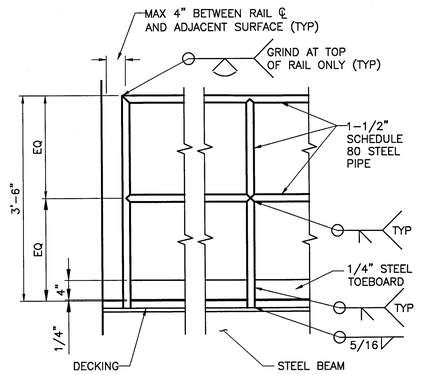

TYPICAL STEEL GUARDRAIL FLUSH MOUNTED

DETAIL (1 / –)
SCALE: 1" = 1'–0"

SPECIFIC NOTES:

A. GALVANIZED STEEL GATE ASSEMBLY WITH SPRING–LOADED HINGE AND LATCH. SEE SPECIFICATIONS SECTION 05 52 00.

B. SEE SPECIFICATION SECTION 05 52 00 SECTION 2.10 FOR FURTHER INFORMATION ON PORTABLE REMOVABLE GUARDRAIL.

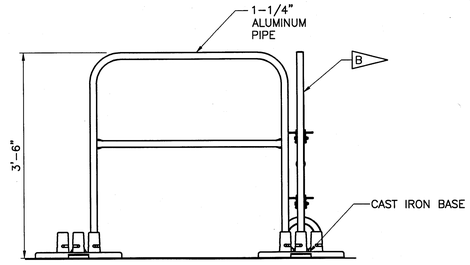

PORTABLE REMOVABLE GUARDRAIL - ELEVATION (D / –)
SCALE: 1" = 1'–0"

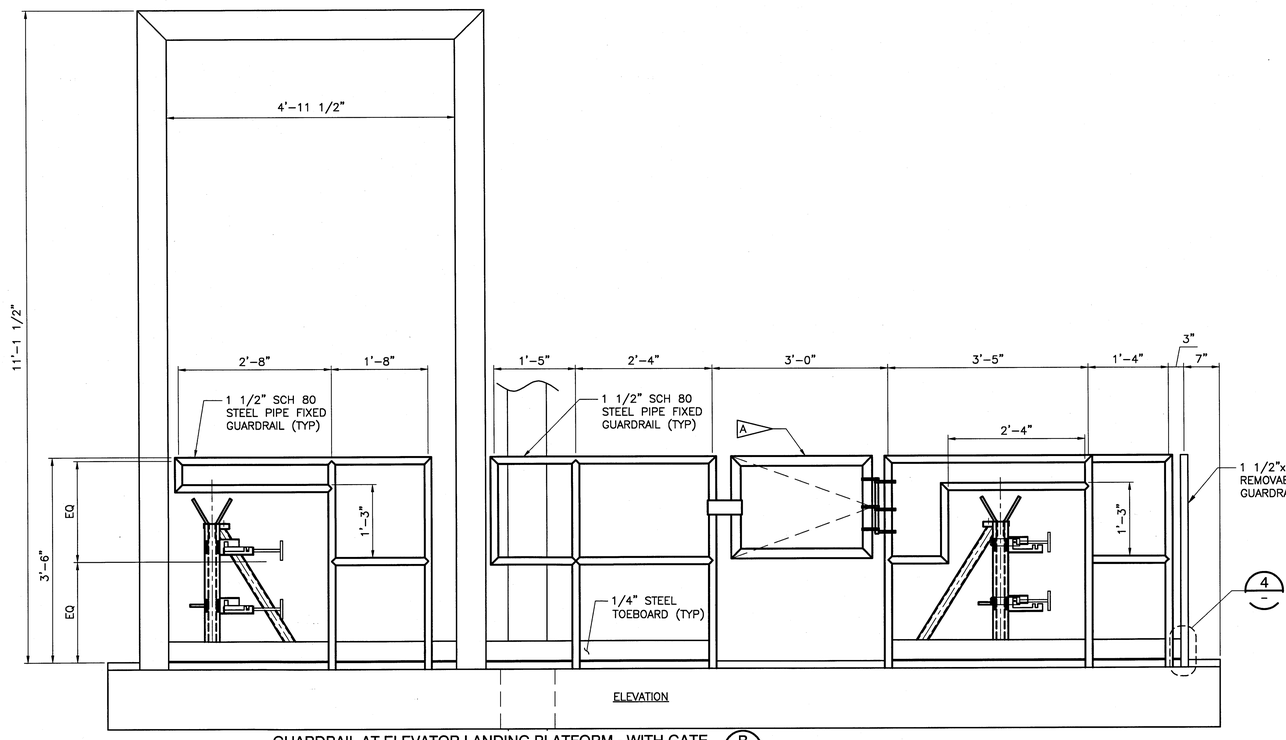

GUARDRAIL AT ELEVATOR LANDING PLATFORM - WITH GATE (B / A–100)
SCALE: 1" = 1'–0"

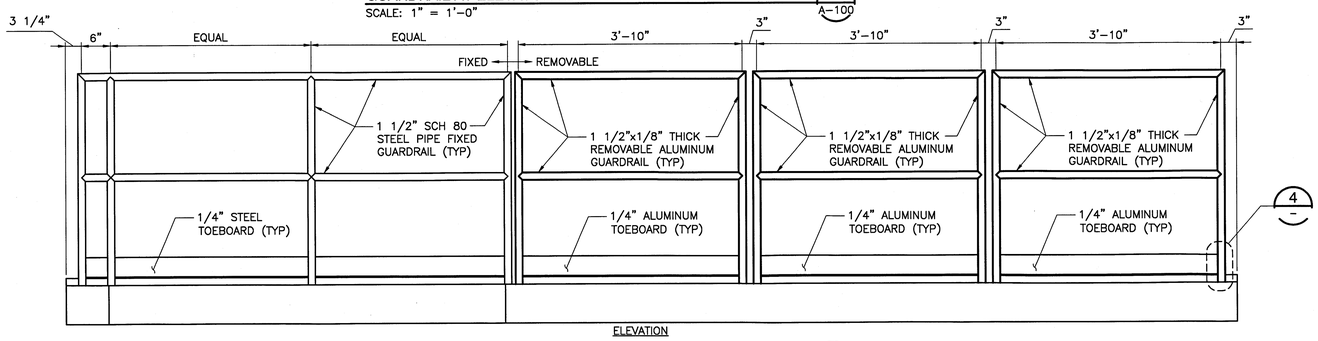

GUARDRAIL AT ELEVATOR LANDING PLATFORM - REMOVABLE (C / A–100)
SCALE: 1" = 1'–0"

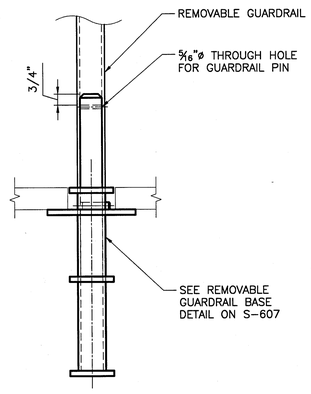

REMOVABLE GUARDRAIL BASE DETAIL (4 / –)
SCALE: 3" = 1'–0"

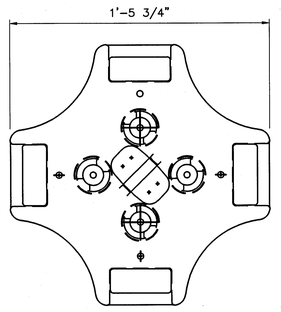

PORTABLE REMOVABLE GUARDRAIL BASE DETAIL (2 / –)
SCALE: 3" = 1'–0"

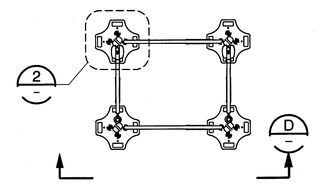

PORTABLE REMOVABLE GUARDRAIL DETAIL (3 / A–100)
SCALE: 1/2" = 1'–0"

1 6" 0 1 2 3 4 5
1/2 IN = 1 FT

0 3" 6" 9" 1'
3 IN = 1 FT

1 9" 6" 3" 0 1 2
1 IN = 1 FT

WHEN PRINTED FULL SIZE, THIS SHEET IS 34"X44"
THIS COMPUTER DRAWING WAS CREATED IN AUTOCAD AND FILED UNDER THE DRAWING NUMBER

A–501

SYM	ZONE	DESCRIPTION	DATE	APPROVAL
		REVISIONS		

RS&H IMPROVING YOUR WORLD
Reynolds, Smith and Hills, Inc.
115 Alma Blvd, Suite 101
Merritt Island, Florida 32953-4101
(321) 453-0212 (321) 453-0223 FAX
www.rsandh.com

SIGNATURES	DATE
DRAWN: BRIAN CURTIS	08-20-2013
CHECKED: ALICE SCHULTZ	08-20-2013
SUBMITTED: ARCHENG OF RECORD: TONY MAZZA	08-20-2013
ST OF LICENSURE: FL	
LICENSE NO: AR0016950	
APPROVED: JOHN KERSCHNER FOR	8.20.13
MIKE HARTNETT	11/5/13

NATIONAL AERONAUTICS AND SPACE ADMINISTRATION
JOHN F. KENNEDY SPACE CENTER, NASA
KENNEDY SPACE CENTER, FLORIDA

LAUNCH COMPLEX 39
VEHICLE ASSEMBLY BUILDING

MODIFY VEHICLE ASSEMBLY BUILDING HIGH BAY 3 FOR SLS – ELEVATOR LANDINGS GUARDRAIL AND MISCELLANEOUS DETAILS

FILE NO.	SIZE	DWG. NO.	REV
302–6058–043	E	79K39665	

PROJ. NO. PCN 99000.5 SHEET 12 OF

NOTICE — WHEN GOVERNMENT DRAWINGS, SPECIFICATIONS, OR OTHER DATA ARE USED FOR ANY PURPOSE OTHER THAN IN CONNECTION WITH A DEFINITELY RELATED GOVERNMENT PROCUREMENT OPERATION, THE UNITED STATES GOVERNMENT THEREBY INCURS NO RESPONSIBILITY NOR ANY OBLIGATION WHATSOEVER; AND THE FACT THAT THE GOVERNMENT MAY HAVE FORMULATED, FURNISHED, OR IN ANY WAY SUPPLIED THE SAID DRAWINGS, SPECIFICATIONS, OR OTHER DATA IS NOT TO BE REGARDED BY IMPLICATION OR OTHERWISE IN ANY MANNER LICENSING THE HOLDER OR ANY OTHER PERSON OR CORPORATION, OR CONVEYING ANY RIGHTS OR PERMISSION TO MANUFACTURE, USE, OR SELL ANY PATENTED INVENTION THAT IN MAY MAY BE RELATED THERETO.

1. GENERAL DEMOLITION NOTES:

1. THE CONTRACTOR SHALL CAREFULLY EXAMINE THE AREAS AND EXISTING CONDITIONS ASSOCIATED WITH THE WORK TO BE PERFORMED TO UNDERSTAND THE EXISTING FIELD CONDITIONS AND DIFFICULTIES THAT AFFECT EXECUTION OF THE WORK, AS WELL AS TO IDENTIFY SYSTEMS AND EQUIPMENT WHICH ARE TO REMAIN IN PLACE AND MUST BE PROTECTED FROM THE DEMOLITION ACTIVITIES.

2. THE CONTRACTOR SHALL REMOVE THE STRUCTURAL ITEMS AND EQUIPMENT IDENTIFIED ON THE DRAWINGS. ITEMS IDENTIFIED FOR REUSE/REINSTALLATION SHALL BE REMOVED, STORED AND PROTECTED DURING CONSTRUCTION ACTIVITIES. ITEMS MARKED TO BE DEMOLISHED AND TURNED OVER TO THE GOVERNMENT ARE THE PROPERTY OF THE GOVERNMENT AND WILL BE SEGREGATED, ITEMIZED AND DISPOSED PER INSTRUCTIONS OF THE CONTRACTING OFFICER.

3. THE CONTRACTOR SHALL DISPOSE OF DEBRIS RUBBISH AND OTHER NON-SALVAGEABLE MATERIALS PROMPTLY.

4. CONTRACTOR SHALL VERIFY QUANTITIES AND SHALL BE RESPONSIBLE FOR THE WORK WITHIN THE DESCRIPTION OF THE SCOPE.

5. THE CONTRACTOR MAY NOT ALTER ANY ELEMENT OUTSIDE THE SCOPE OF THIS PROJECT WITHOUT THE PRIOR APPROVAL OF THE CONTRACTING OFFICER.

2. GENERAL STRUCTURAL NOTES:

1. CONTRACTOR SHALL PROVIDE ALL TEMPORARY BRACING, SHORING, AND OTHER MEASURES TO PROTECT PERSONNEL, STRUCTURES UNDER CONSTRUCTION, AND ADJACENT STRUCTURES DURING CONSTRUCTION. CONTRACTOR SHALL FIELD VERIFY ALL EXISTING CONDITIONS IN ERECTION SITE PRIOR TO PROCEEDING WITH FABRICATION AND CONSTRUCTION.

3. STRUCTURAL STEEL DESIGN:

1. ALL WORK SHALL BE IN ACCORDANCE WITH THE AISC "SPECIFICATION FOR STRUCTURAL STEEL BUILDINGS" AND THE "CODE OF STANDARD PRACTICE" AS CONTAINED IN THE THIRTEENTH EDITION OF THE AISC STEEL CONSTRUCTION MANUAL WITH THE FOLLOWING EXCEPTION. DIMENSION TOLERANCES PRESCRIBED ON THE DRAWINGS ARE TO BE ADHERED TO AS WELL AS THE FABRICATION AND ERECTION TOLERANCES PRESENTED IN THE "CODE OF STANDARD PRACTICE."

2. STRUCTURAL STEEL PROPERTIES UNLESS OTHERWISE NOTED:

   PLATE THICKNESS <= 4":ASTM A572, GRADE 50
   HSS SHAPES: ASTM A500 GRADE B
   W SHAPES:
   EXISTING: ASTM 36
   NEW: ASTM A992, GRADE 50
   B SHAPES EXISTING: ASTM 36
   ANGLES AND CHANNEL SHAPES:
   EXISTING: ASTM 36
   NEW: ASTM A992, GRADE 50
   STRUCTURAL STEEL BOLTS: ASTM A325
   STRUCTURAL STEEL NUTS: ASTM A563
   STRUCTURAL STEEL WASHERS: ASTM F436

   ANY CARBON STEEL MATERIAL DESIGNATED TO BE HOT-DIPPED GALVANIZED SHALL BE GALVANIZED IN ACCORDANCE WITH ASTM A123. ALL CARBON STEEL FASTENERS AND HARDWARE SHALL BE GALVANIZED IN ACCORDANCE WITH ASTM A153.

3. WELDING SHALL BE IN ACCORDANCE WITH AWS D1.1 AND THE REQUIREMENTS OF NASA-SPEC-5004. WELDERS AND WELDING OPERATORS SHALL BE QUALIFIED IN ACCORDANCE WITH AWS D1.1 ALL WELDS REQUIRE A CLASS B INSPECTION UNLESS NOTED AS CLASS A IN THE WELD SYMBOL OR IN THE WELDMENT NOTATION.

4. SUBSTITUTIONS OF SPECIFIED MEMBER SIZE OR CHANGE IN DETAILS OR DIMENSIONS OF ANY KIND SHALL NOT BE PERMITTED WITHOUT PRIOR WRITTEN APPROVAL FROM THE CONTRACTING OFFICER OR HIS/HER DESIGNEE.

5. WELDED JOINTS SHALL CONFORM TO SECTION J2 OF THE AISC SPECIFICATION FOR STRUCTURAL STEEL BUILDINGS – ASD.

6. SHOP CONNECTIONS SHALL BE WELDED UNLESS OTHERWISE NOTED.

7. BRACING AND TRUSS CONNECTIONS SHALL BE SIZED TO DEVELOP THE LOAD SPECIFIED ON THE DESIGN DRAWINGS OR 75% OF THEIR TENSION CAPACITY. A MINIMUM CONNECTION SHALL CONSIST OF TWO BOLTS.

8. ALL CONNECTION SHOP DRAWINGS SHALL BE DESIGNED AND SEALED BY A REGISTERED FLORIDA P.E. COPIES OF ALL SHOP DRAWING CALCULATIONS SHALL BE SUBMITTED TO THE CONTRACTING OFFICER FOR APPROVAL AT SAME TIME AS CONNECTION SHOP DRAWINGS.

9. ERECTION BOLTS, PLATE SHIMS, AND TEMPORARY FASTENINGS REQUIRED FOR ERECTION SHALL BE FURNISHED BY THE STEEL ERECTOR. ALL PLATES, EXTRA FRAMING, AND OTHER COMPONENTS NOT DEPICTED ON THESE DRAWINGS THAT HAVE BEEN ADDED FOR EASE OF FABRICATION AND ERECTION SHALL BE REMOVED AFTER USE, AS WELL AS ANY SPATTER; AND WELD SCARS SHALL BE GROUND OFF AND REPAIRED. STEEL COATINGS SHALL BE TOUCHED UP PER SPECIFICATION SECTION 09 97 13.00 98 PARAGRAPH 3.4.

10. SHOP AND FIELD SPLICES OF STRUCTURAL MEMBERS ARE PROHIBITED EXCEPT AS SHOWN ON THE DRAWING AND/OR PERMITTED IN THE SPECIFICATIONS AND AS SPECIFICALLY APPROVED ON SHOP DRAWINGS PRIOR TO FABRICATION.

11. BOLT HOLES SHALL NOT BE CUT, ALIGNED OR ENLARGED BY FLAME CUTTING IN THE FIELD.

12. MILLED ENDS FOR INTERMEDIATE OR BEARING STIFFENERS ARE NOT REQUIRED UNLESS NOTED OTHERWISE. WELD STIFFENERS AS INDICATED ON DRAWINGS.

13. AXIALLY STRESSED MEMBERS MEETING AT A POINT SHALL HAVE THEIR GRAVITY AXIS MEET AT A POINT IF PRACTICAL; IF NOT, PROVISIONS SHALL BE MADE FOR BENDING STRESSES DUE TO ECCENTRICITY.

14. GUSSET PLATES SHALL BE A MINIMUM OF 1/2" THICK. ANY CROSS SECTION OF THE GUSSET, WELD OR BOLT GROUP SHALL BE DESIGNED TO DEVELOP THE AXIAL LOAD INDICATED OR THE FULL CAPACITY OF THE BOLT GROUP, WHICHEVER IS LARGER, PLUS ANY BENDING DUE TO ECCENTRICITY. THIS THICKNESS REQUIREMENT DOES NOT APPLY TO SHEAR TABS FOR THE FLOOR STEEL CONNECTIONS.

15. BOLTED JOINTS SHALL CONFORM TO THE PROVISIONS OF SECTION J3 OF THE AISC SPECIFICATION FOR STRUCTURAL STEEL BUILDINGS – ASD.

16. ALL BOLTED JOINTS SHALL USE FIBER TYPE LOCK NUTS UNLESS OTHERWISE NOTED.

17. SIZES, SPACING AND QUANTITY OF BOLTS FOR EQUIPMENT TO BE FURNISHED BY SUBCONTRACTORS SHALL BE DETERMINED BY THE CONTRACTOR AND COORDINATED WITH ALL SUBCONTRACTORS PRIOR TO PREPARATION OF SHOP DRAWINGS.

18. ONE FORTH INCH (1/4") THICKNESS WELDED CLOSURE PLATE SHALL BE PROVIDED AT OPEN ENDS OF ALL PIPE MEMBERS UNLESS OTHERWISE NOTED. CONNECT TO PIPE MEMBERS WITH 3/16" SINGLE BEVEL GROOVE WELD.

19. REQUESTS FOR PENETRATIONS THROUGH WIDE FLANGE BEAMS MUST BE APPROVED BY THE CONTRACTING OFFICER.

20. BREAK SHARP EDGES TO BE PAINTED WITH 1/8" RADIUS MINIMUM.

4. METAL CELLULAR DECK:

1. METAL CELLULAR DECKING SHALL BE 1.5B 18/20 CELLULAR DECK WITH 3/16" STEEL PLATE ATTACHED TO DECK PER THE SDI FABRICATION REQUIREMENTS:
   HEIGHT OF DECK: 1.5"
   NOMINAL WIDTH OF CELLS 3.5"
   MINIMUM PAN THICKNESS 16 GAUGE
   DECK SECTION PROPERTIES (MINIMUM): Ip = 0.373in^4/FT, Sp = 0.408in^3/FT, Sn = 0.411in^3/ft
   GALVANIZED ASTM A653 STEEL
   NO INTERNAL INSULATION
   BASIS OF DESIGN: 1.5B DECK WITH 3/16" STEEL PLATE ATTACHED.
   SEE TYPICAL DECKING DETAIL 1/–

5. DESIGN CAPACITY:

1. ELEVATOR LANDING PLATFORMS ARE DESIGNED FOR THE FOLLOWING CONDITIONS. SEE ARCHITECTURAL NOTES FOR SIGNAGE.

   INSTALLED CONDITION A: LIVE LOAD OF 100 PSF OR
   INSTALLED CONDITION B: 8000 LBS CART AND LIVE LOAD OF 100 PSF AROUND CART (3000 LBS MAX)
   LIFTING CONDITION: LIVE LOAD OF 50 PSF LIMITED ADJACENT TO THE VAB CONNECTIONS (4500 LBS MAX)

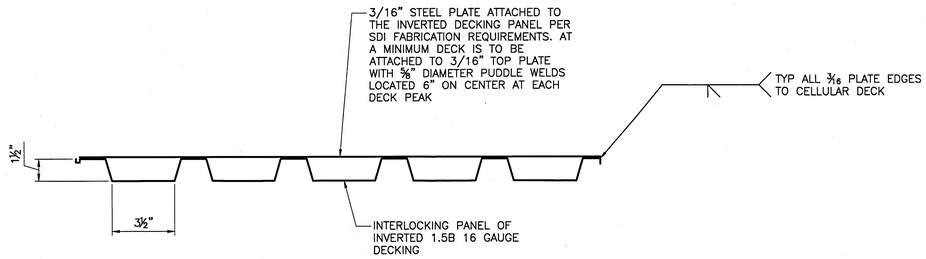

TYPICAL DECKING DETAIL 1/–
SCALE: NTS

WHEN PRINTED FULL SIZE, THIS SHEET IS 34"X44"
THIS COMPUTER DRAWING WAS CREATED IN AUTOCAD AND FILED UNDER THE DRAWING NUMBER

S-001

SYM	ZONE	DESCRIPTION	DATE	APPROVAL
		REVISIONS		

RS&H IMPROVING YOUR WORLD

Reynolds, Smith and Hills, Inc.
115 Alma Blvd, Suite 101
Merritt Island, Florida 32953-4101
(321) 453-0212 (321) 453-0223 FAX
www.rsandh.com

SIGNATURES		DATE
DRAWN: JOSEPH HAUER		08-20-2013
CHECKED: STEVE MOORE		08-20-2013
SUBMITTED/ARCHIVING OF RECORD: RICHARD PRUSS		08-20-2013
ST OF LICENSURE: FL LICENSE NO: 74624		
APPROVED: JOHN KERCSMAR		8.20.13
MIKE HARTNETT		11/5/13

NATIONAL AERONAUTICS AND SPACE ADMINISTRATION
JOHN F. KENNEDY SPACE CENTER, NASA
KENNEDY SPACE CENTER, FLORIDA

LAUNCH COMPLEX 39
VEHICLE ASSEMBLY BUILDING

MODIFY VEHICLE ASSEMBLY BUILDING HIGH BAY 3 FOR SLS – ELEVATOR LANDINGS

STRUCTURAL GENERAL NOTES

FILE NO.	SIZE	DWG. NO.	REV
302-6058-043	E	79K39665	

PROJ. NO. PCN 99000.5 SHEET 13 OF

NOTICE — WHEN GOVERNMENT DRAWINGS, SPECIFICATIONS, OR OTHER DATA ARE USED FOR ANY PURPOSE OTHER THAN IN CONNECTION WITH A DEFINITELY RELATED GOVERNMENT PROCUREMENT OPERATION, THE UNITED STATES GOVERNMENT THEREBY INCURS NO RESPONSIBILITY NOR ANY OBLIGATION WHATSOEVER; AND THE FACT THAT THE GOVERNMENT MAY HAVE FORMULATED, FURNISHED, OR IN ANY WAY SUPPLIED THE SAID DRAWINGS, SPECIFICATIONS, OR OTHER DATA IS NOT TO BE REGARDED BY IMPLICATION OR OTHERWISE IN ANY MANNER CONSTRUED, THE HOLDER OR ANY OTHER PERSON OR CORPORATION, OR CONVEYING ANY RIGHTS OR PERMISSION TO MANUFACTURE, USE, OR SELL ANY PATENTED INVENTION THAT IN ANY WAY BE RELATED THERETO.

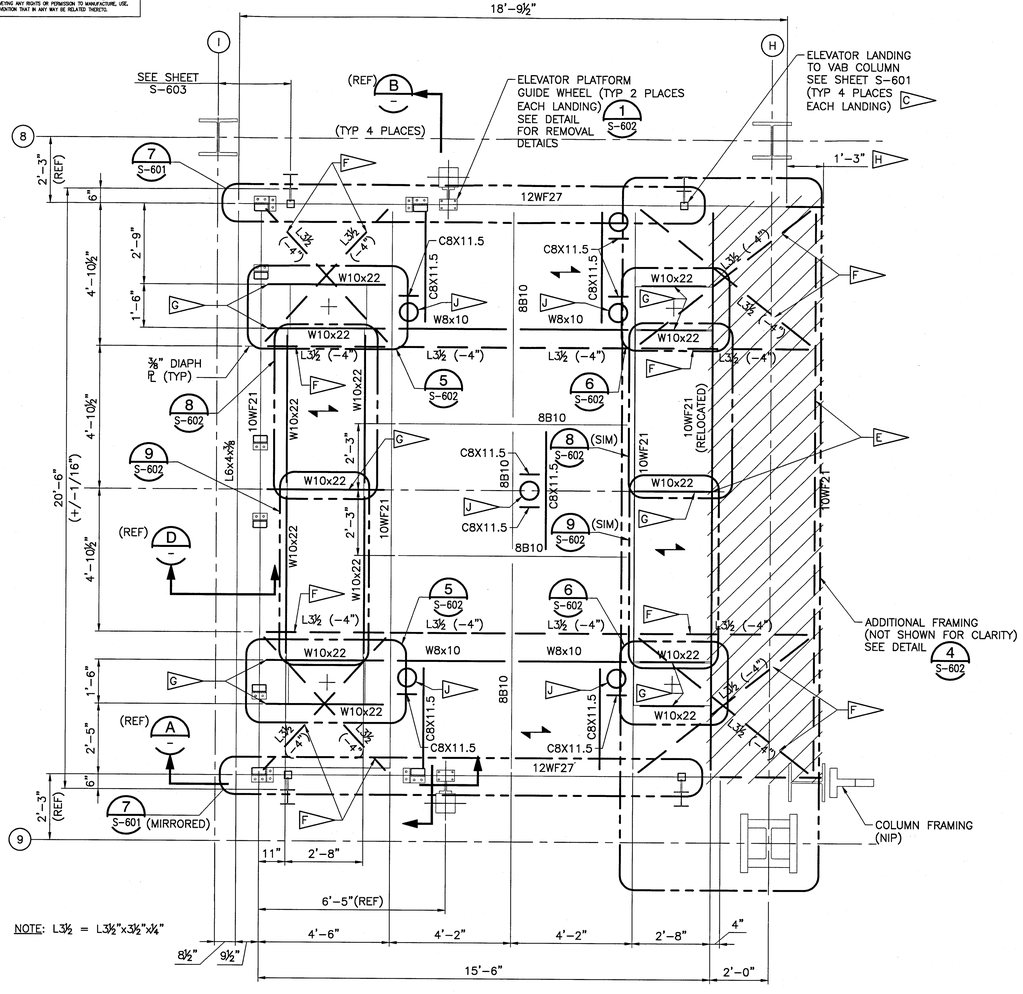

NOTE: L3½ = L3½"x3½"x¼"

(TOWER E PLATFORMS SHOWN)
(TOWER F PLATFORMS OPPOSITE HAND)
(TYP 4 PLACES IN TOWER F)
(TYP 5 PLACES IN TOWER E)

EXISTING ELEVATOR LANDING PLATFORMS
SCALE: 1/2"=1'-0"

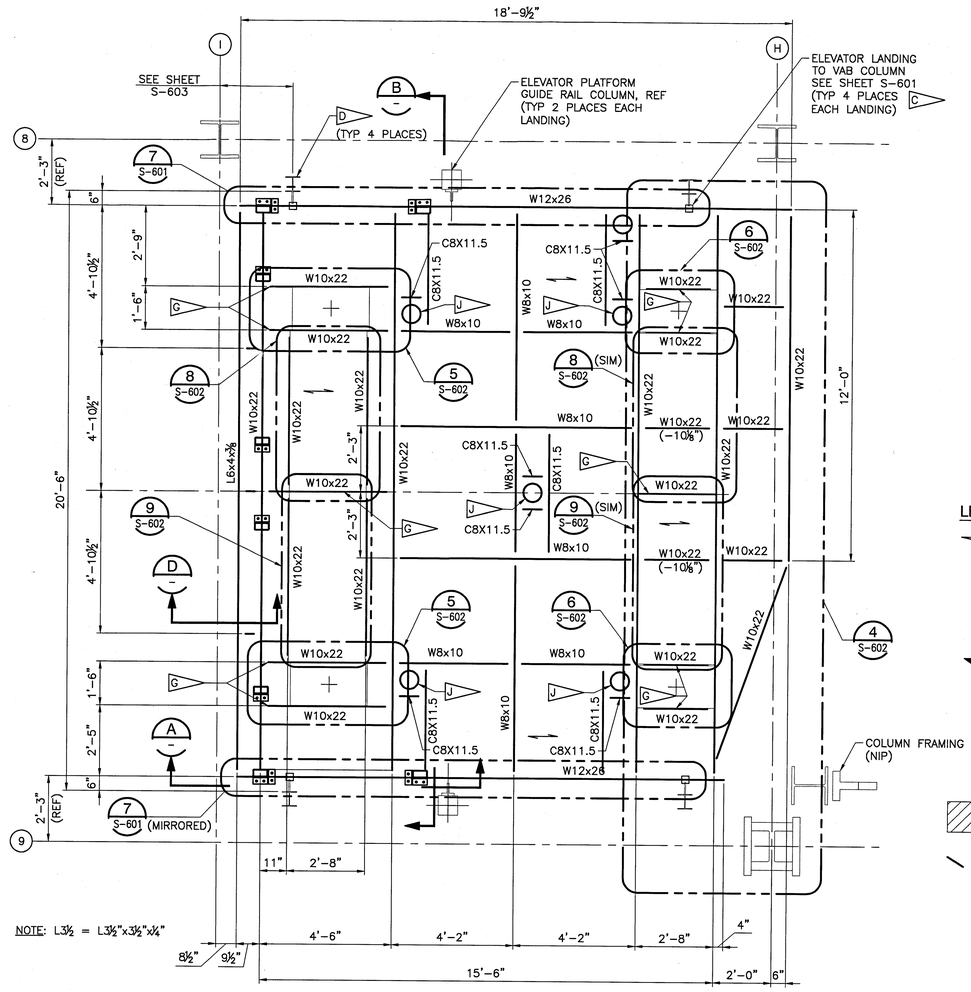

NOTE: L3½ = L3½"x3½"x¼"

(TOWER E PLATFORMS SHOWN)
(TOWER F PLATFORMS OPPOSITE HAND)
(TYP 6 PLACES IN TOWER F)
(TYP 5 PLACES IN TOWER E)

NEW ELEVATOR LANDING PLATFORMS
SCALE: 1/2"=1'-0"

SPECIFIC NOTES:

A. FRAMING BETWEEN COLUMN LINES 3 AND 4 OPPOSITE HAND.

B. UNLESS OTHERWISE NOTED, ALL FRAMING MEMBERS SHALL BE STANDARD AISC CONNECTIONS DESIGNED TO THE 13th EDITION AISC STEEL MANUAL REQUIREMENTS. THE FOLLOWING MINIMUM ASD DESIGN LOADS SHALL BE MET FOR:

W10's: SHEAR: 15 KIPS AXIAL: 5 KIPS
W8's: SHEAR: 14 KIPS AXIAL: 5 KIPS
L6x4: SHEAR: 1 KIP
C8's: SHEAR: 16 KIPS AXIAL: 1 KIP

C SEE SHEET S-602 FOR REMOVAL OF EXISTING CORBEL SUPPORT INFORMATION.

D REMOVE EXISTING 6WF15 HANGER AT CONNECTION POINTS. EXISTING HANGER RUNS BETWEEN FLOOR LEVELS 36 AND LEVEL 9. SEE SHEET S-603 FOR TYPICAL CONNECTION DETAILS. INSTALL NEW W6x15 HANGER PER DETAIL 2/S-603 FOR W6 INSTALLED ALONG COLUMN LINES 3 AND 9, SEE DETAIL 3/S-603 FOR W6 INSTALLED ALONG COLUMN LINES 4 AND 8. SEE SHEET S-603 FOR INSTALLATION DIMENSIONS.

E RELOCATE EXISTING 10WF21 AND TRIM REMAINING FRAMING.

F NOT USED.

G SEE SHEETS M-401 TO M-404 FOR ADDITIONAL W10 FRAMING DETAILS.

H LIMIT OF WF12 REMOVAL.

J FALL PROTECTION POST SOCKET, SEE SHEET S-607 FOR DETAILS.

LEGEND:

SPAN DIRECTION OF INVERTED 1.5B 16 GAUGE METAL DECK WITH 3/16" THICK STEEL PLATE ATTACHED TO METAL DECK PER THE SDI FABRICATION REQUIREMENTS. PROVIDE 1-3/8" HOLE THRU TOP OF DECK FOR FASTENER INSTALLATION. INSTALL 1/2" DIA-13 (A307/A325 HDG) THRU BOLT WITH HEAVY DUTY, LOCKING HEX NUTS. ONLY 2 BOLTS PER 24" WIDE DECK PANEL AT EACH BEAM ARE REQUIRED. PROVIDE SNAP BLANKS TO CLOSE HOLES IN TOP OF DECK. EXTEND DECKING TO EDGE OF PERIMETER BEAM FLANGES.

SPAN DIRECTION OF EXISTING 1.5BP 14/14 INVERTED METAL CELLULAR DECK. REMOVE EXISTING DECK PANELS AND INSTALL INVERTED 1.5B 16 GAUGE METAL DECK WITH 3/16" THICK STEEL PLATE ATTACHED TO METAL DECK PER THE SDI FABRICATION REQUIREMENTS. PROVIDE 1-3/8" HOLE THRU TOP OF DECK FOR FASTENER INSTALLATION. INSTALL 1/2" DIA-13 (A307/A325 HDG) THRU BOLT WITH HEAVY DUTY, LOCKING HEX NUTS. ONLY 2 BOLTS PER 24" WIDE DECK PANEL AT EACH BEAM ARE REQUIRED. PROVIDE SNAP BLANKS TO CLOSE HOLES IN TOP OF DECK. EXTEND DECKING TO EDGE OF PERIMETER BEAM FLANGES.

INDICATES AREA OF EXISTING LANDING TO BE REMOVED.

INDICATES MEMBER TO BE REMOVED.

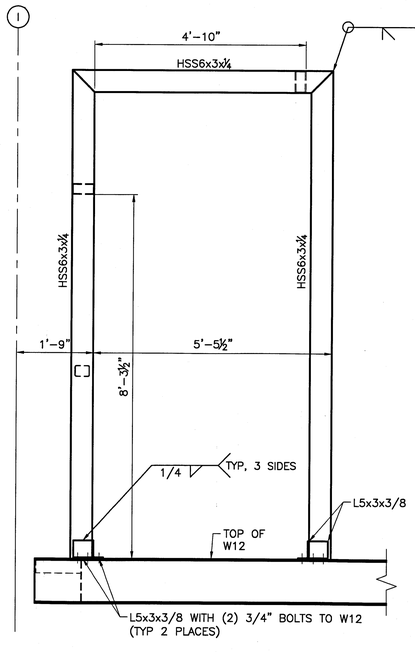

(TYP BOTH ENDS OF PLATFORMS)
(HSS FRAME EXISTS ON EXISTING PLATFORMS)

ELEVATION A
SCALE: 3/4"=1'-0"

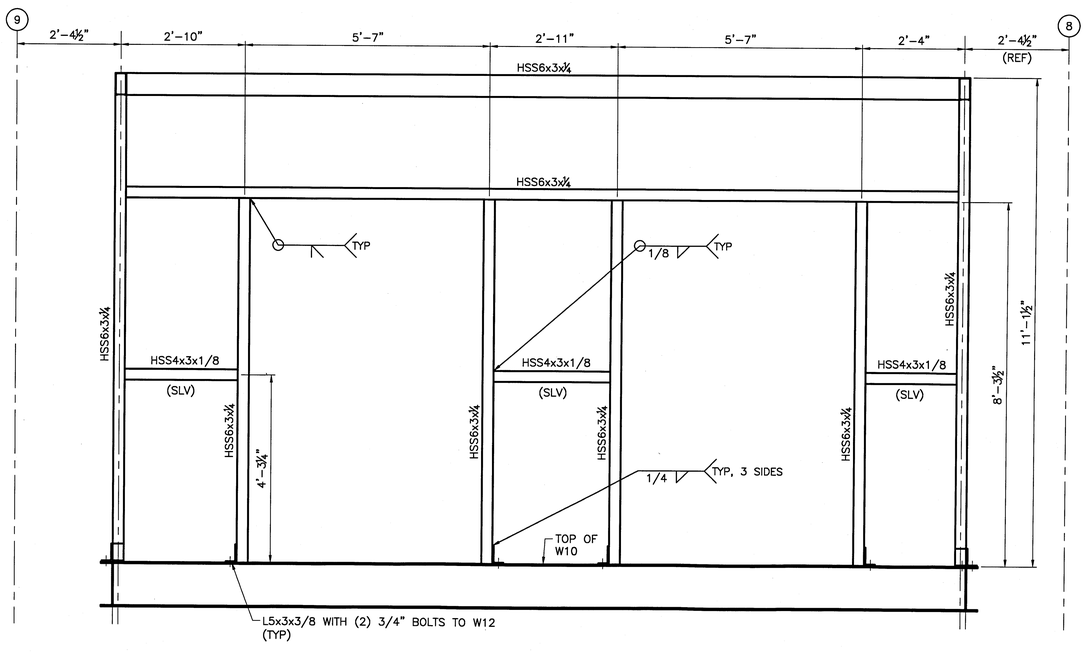

(HSS FRAME EXISTS ON EXISTING PLATFORMS)

SECTION B
SCALE: 3/4"=1'-0"

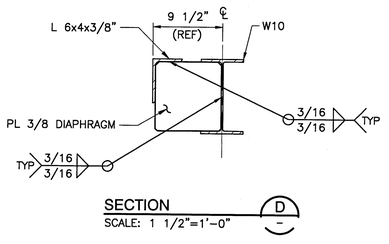

SECTION D
SCALE: 1 1/2"=1'-0"

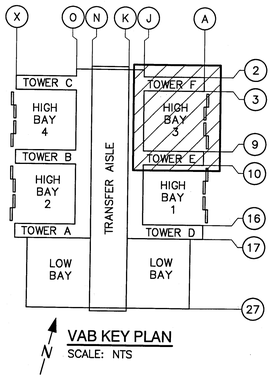

VAB KEY PLAN
SCALE: NTS

1 6" 0 1 2 3 4 5
1/2 IN = 1 FT
1 9"6"3"0 1 2 3
3/4 IN = 1 FT

WHEN PRINTED FULL SIZE, THIS SHEET IS 34"X44"
THIS COMPUTER DRAWING WAS CREATED IN AUTOCAD AND FILED UNDER THE DRAWING NUMBER S-600

SYM	ZONE	DESCRIPTION	DATE	APPROVAL

REVISIONS

RS&H IMPROVING YOUR WORLD
Reynolds, Smith and Hills, Inc.
115 Alma Blvd, Suite 101
Merritt Island, Florida 32953-4101
(321) 453-0212 (321) 453-0223 FAX
www.rsandh.com

SIGNATURES		DATE
DRAWN:	JOSEPH HAUER	08-20-2013
CHECKED:	STEVE MOORE	08-20-2013
SUBMITTED/ARCHIVING OF RECORD	RICHARD PRUSS	08-20-2013
ST OF LICENSURE: FL	LICENSE NO: 74624	
APPROVED	JOHN KERCSMAR	8/20/13
	MIKE HARTNETT	8/5/13

NATIONAL AERONAUTICS AND SPACE ADMINISTRATION
JOHN F. KENNEDY SPACE CENTER, NASA
KENNEDY SPACE CENTER, FLORIDA

LAUNCH COMPLEX 39
VEHICLE ASSEMBLY BUILDING

MODIFY VEHICLE ASSEMBLY BUILDING HIGH BAY 3 FOR SLS – ELEVATOR LANDINGS
ELEVATOR LANDING PLAN

FILE NO. 302-6058-043 | SIZE E | DWG. NO. 79K39665 | REV
PROJ. NO. PCN 99000.5 | SHEET 14 OF

NOTICE — WHEN GOVERNMENT DRAWINGS, SPECIFICATIONS, OR OTHER DATA ARE USED FOR ANY PURPOSE OTHER THAN IN CONNECTION WITH A DEFINITELY RELATED GOVERNMENT PROCUREMENT OPERATION, THE UNITED STATES GOVERNMENT THEREBY INCURS NO RESPONSIBILITY NOR ANY OBLIGATION WHATSOEVER; AND THE FACT THAT THE GOVERNMENT MAY HAVE FORMULATED, FURNISHED, OR IN ANY WAY SUPPLIED THE SAID DRAWINGS, SPECIFICATIONS, OR OTHER DATA IS NOT TO BE REGARDED BY IMPLICATION OR OTHERWISE IN ANY MANNER LICENSING THE HOLDER OF ANY OTHER PERSON OR CORPORATION, OR CONVEYING ANY RIGHTS OR PERMISSION TO MANUFACTURE, USE, OR SELL ANY PATENTED INVENTION THAT IN ANY WAY BE RELATED THERETO.

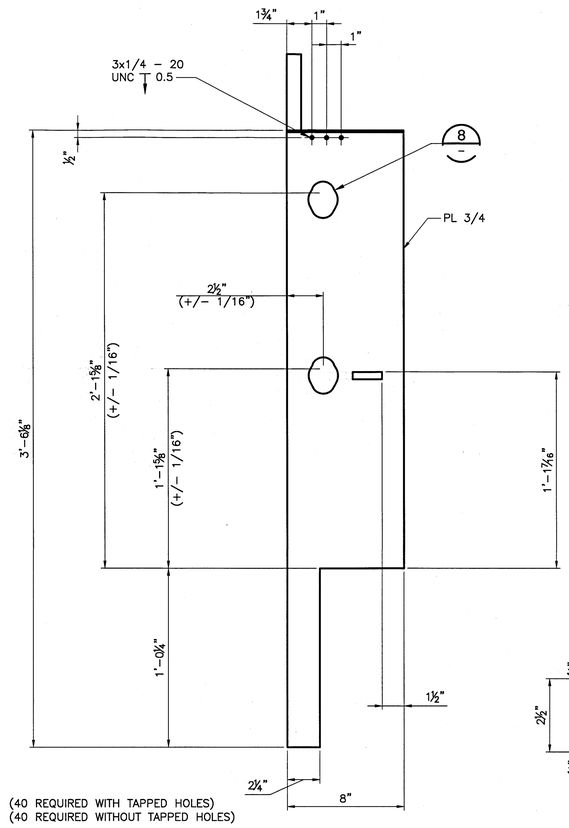

(40 REQUIRED WITH TAPPED HOLES)
(40 REQUIRED WITHOUT TAPPED HOLES)

ELEVATION A
SCALE: 3"=1'–0"

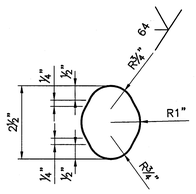

PIN HOLE DETAIL 8
SCALE: 3"=1'–0"

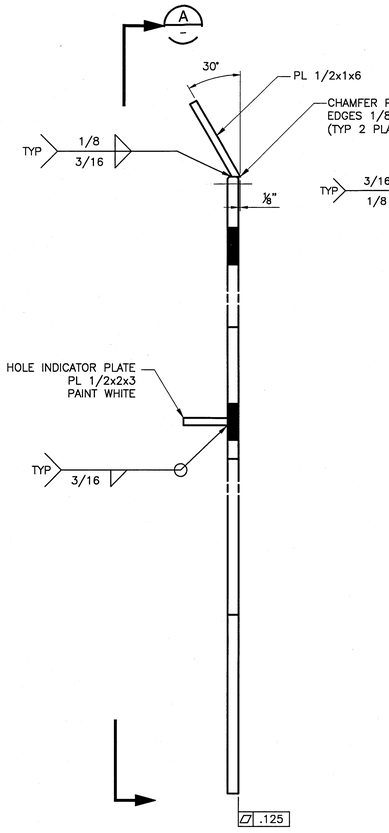

DETAIL 1
SCALE: 3"=1'–0"

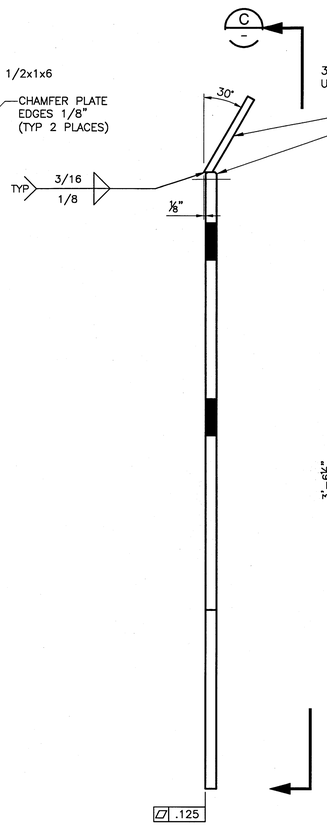

DETAIL 10
SCALE: 3"=1'–0"

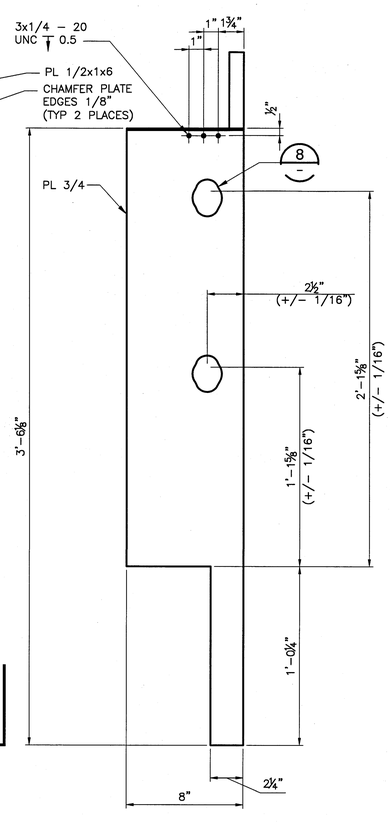

(40 REQUIRED WITH TAPPED HOLES)
(40 REQUIRED WITHOUT TAPPED HOLES)

ELEVATION C
SCALE: 3"=1'–0"

SPECIFIC NOTES:

A. ALL PLATE STEEL IS A572 GR 50 UNLESS OTHERWISE NOTED.

B IMPACT–RESISTANT UHMW POLYETHYLENE STRIP, CUT TO SUIT. ADHESIVE–READY STRIP WITH ONE SIDE ETCHED FOR ADHESIVE AND THE OTHER SIDE SMOOTH. STRIPS SHALL MEET T UL 94V2 FOR FLAME RETARDANCE AS WELL AS ASTM D4020, MIL–B–17901 AND MIL–P–23536. ADHERE UHMW SHEET TO STEEL USING AN EPOXY THAT IS DESIGNED FOR BONDING UHMW TO STEEL. ADHESIVE SHALL BE ABLE TO CURE AT AMBIENT TEMPERATURES AND HAVE A MINIMUM SHEAR STRENGTH OF 400 PSI. APPLY PER MANUFACTURER'S RECOMMENDED APPLICATION PROCEDURE.

C TOP AND BOTTOM FLANGE NOTCHES SHALL BE CUT AFTER COMPLETION OF PLATFORM ASSEMBLY AND WELDING.

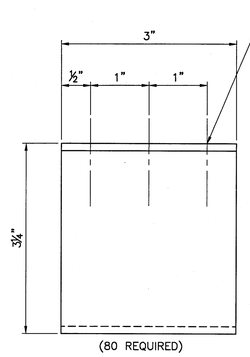

(80 REQUIRED)

ELEVATION H
SCALE: 1'–0"=1'–0"

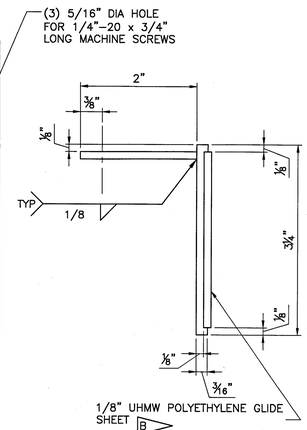

DETAIL 11
SCALE: 1'–0"=1'–0"

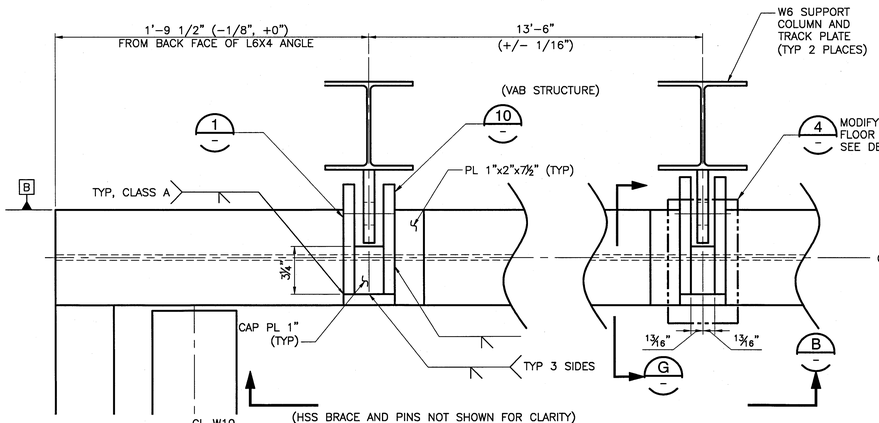

(HSS BRACE AND PINS NOT SHOWN FOR CLARITY)

DETAIL 7 S–600
SCALE: 3"=1'–0"

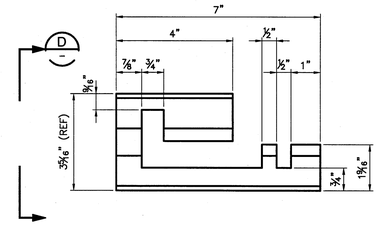

(160 REQUIRED)

DETAIL 5
SCALE: 6"=1'–0"

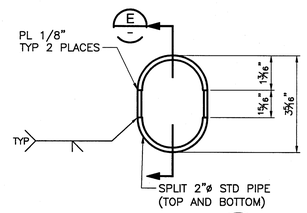

ELEVATION D
SCALE: 6"=1'–0"

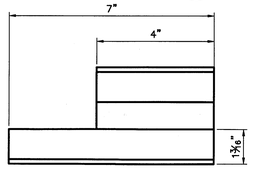

SECTION E
SCALE: 6"=1'–0"

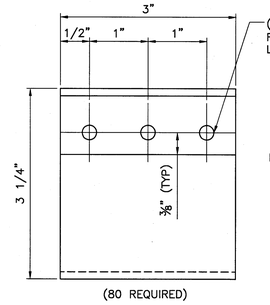

(80 REQUIRED)

ELEVATION F
SCALE: 1'–0"=1'–0"

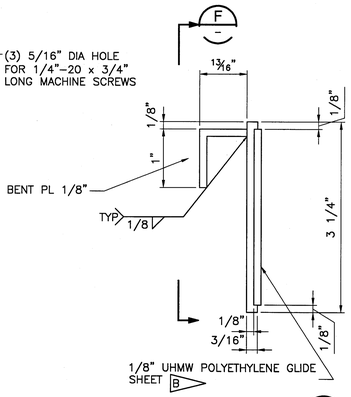

DETAIL 9
SCALE: 1'–0"=1'–0"

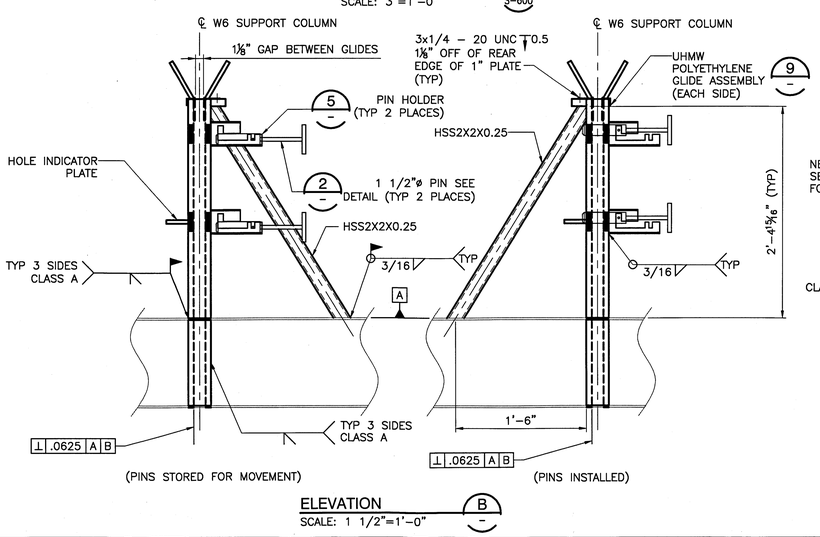

(PINS STORED FOR MOVEMENT) (PINS INSTALLED)

ELEVATION B
SCALE: 1 1/2"=1'–0"

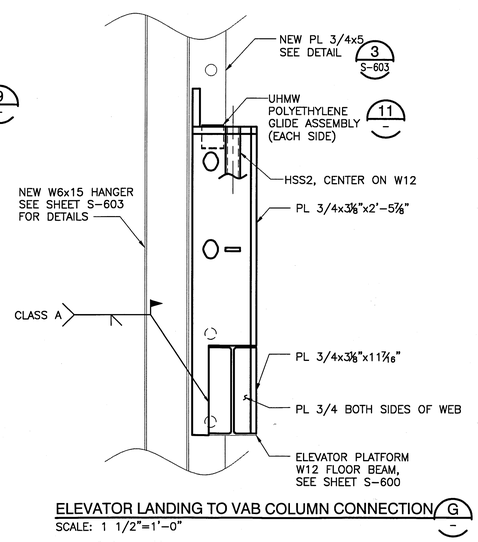

ELEVATOR LANDING TO VAB COLUMN CONNECTION G
SCALE: 1 1/2"=1'–0"

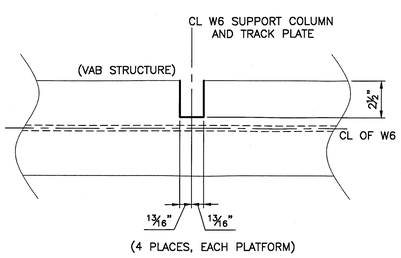

(4 PLACES, EACH PLATFORM)

DETAIL 4 C
SCALE: 3"=1'–0"

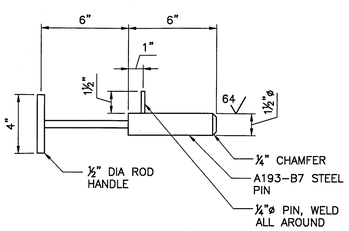

DETAIL 2
SCALE: 3"=1'–0"

1 9" 6" 3" 0 1
1 1/2 IN = 1 FT
0 3" 6" 9" 1'
3 IN = 1 FT
0 3" 6"
6 IN = 1 FT

WHEN PRINTED FULL SIZE, THIS SHEET IS 34"X44"
THIS COMPUTER DRAWING WAS CREATED IN AUTOCAD AND FILED UNDER THE DRAWING NUMBER

S–601

SYM	ZONE	DESCRIPTION	DATE	APPROVAL
		REVISIONS		

RS&H IMPROVING YOUR WORLD
Reynolds, Smith and Hills, Inc.
115 Alma Blvd, Suite 101
Merritt Island, Florida 32953-4101
(321) 453-0212 (321) 453-0223 FAX
www.rsandh.com

SIGNATURES	DATE
DRAWN: JOSEPH HAUER	08-20-2013
CHECKED: STEVE MOORE	08-20-2013
SUBMITTED: ARCHIVING OF RECORD: RICHARD PRUSS	08-20-2013
ST OF LICENSURE: FL LICENSE NO: 74624	
APPROVED: JOHN KERKSMAR FOR	8.20.13
MIKE HARTNETT	11/5/13

NATIONAL AERONAUTICS AND SPACE ADMINISTRATION
JOHN F. KENNEDY SPACE CENTER, NASA
KENNEDY SPACE CENTER, FLORIDA

LAUNCH COMPLEX 39
VEHICLE ASSEMBLY BUILDING

MODIFY VEHICLE ASSEMBLY BUILDING HIGH BAY 3 FOR SLS – ELEVATOR LANDINGS
ELEVATOR LANDING DETAILS –1

FILE NO.	SIZE	DWG. NO.	REV
302–6058–043	E	79K39665	
PROJ. NO. PCN 99000.5		SHEET 15 OF	

NOTICE — WHEN GOVERNMENT DRAWINGS, SPECIFICATIONS, OR OTHER DATA ARE USED FOR ANY PURPOSE OTHER THAN IN CONNECTION WITH A DEFINITELY RELATED GOVERNMENT PROCUREMENT OPERATION, THE UNITED STATES GOVERNMENT THEREBY INCURS NO RESPONSIBILITY NOR ANY OBLIGATION WHATSOEVER; AND THE FACT THAT THE GOVERNMENT MAY HAVE FORMULATED, FURNISHED, OR IN ANY WAY SUPPLIED THE SAID DRAWINGS, SPECIFICATIONS OR ANY OTHER DATA IS NOT TO BE REGARDED BY IMPLICATION OR OTHERWISE IN ANY MANNER LICENSING THE HOLDER OR ANY OTHER PERSON OR CORPORATION, OR CONVEYING ANY RIGHTS OR PERMISSION TO MANUFACTURE, USE, OR SELL ANY PATENTED INVENTION THAT IN ANY WAY BE RELATED THERETO.

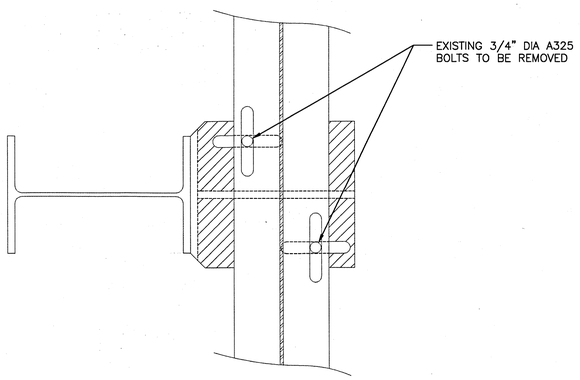

PLAN

SECTION A
SCALE: 3"=1'-0"

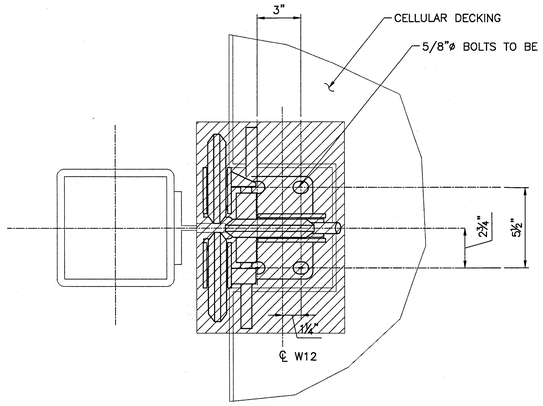

PLAN

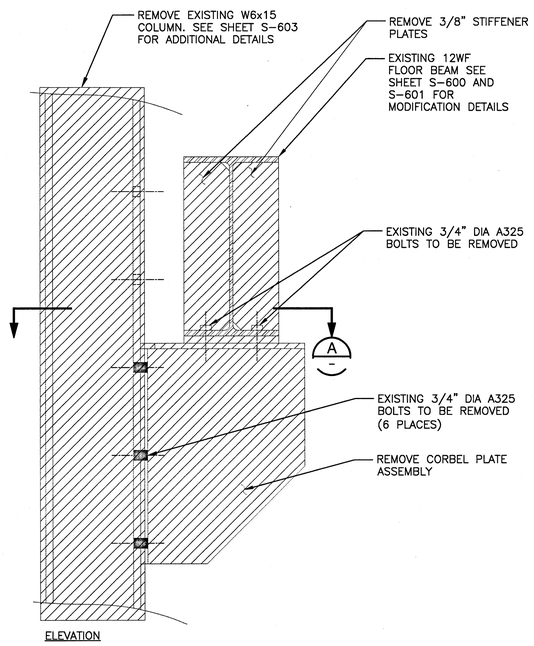

ELEVATION

(36 PLACES)

EXISTING ELEVATOR LANDING SUPPORT CORBEL
SCALE: 3"=1'-0"

ELEVATION

ELEVATOR GUIDE - DETAIL 1 S-600
SCALE: 3"=1'-0"

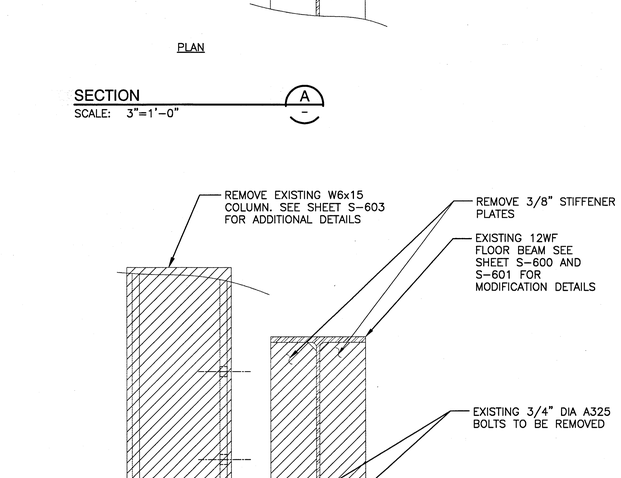

DETAIL 6 S-600
SCALE: 1 1/2"=1'-0"

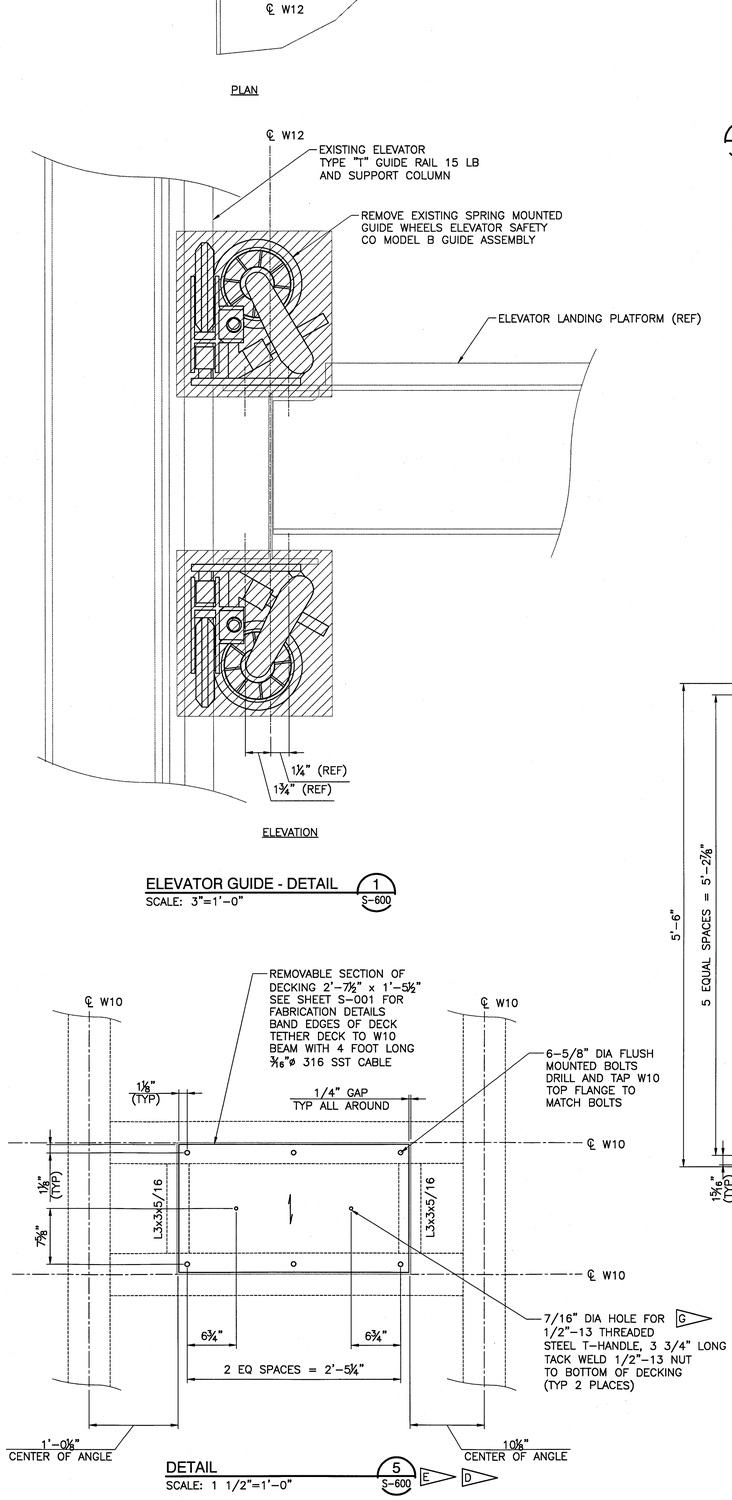

DETAIL 5 S-600
SCALE: 1 1/2"=1'-0"

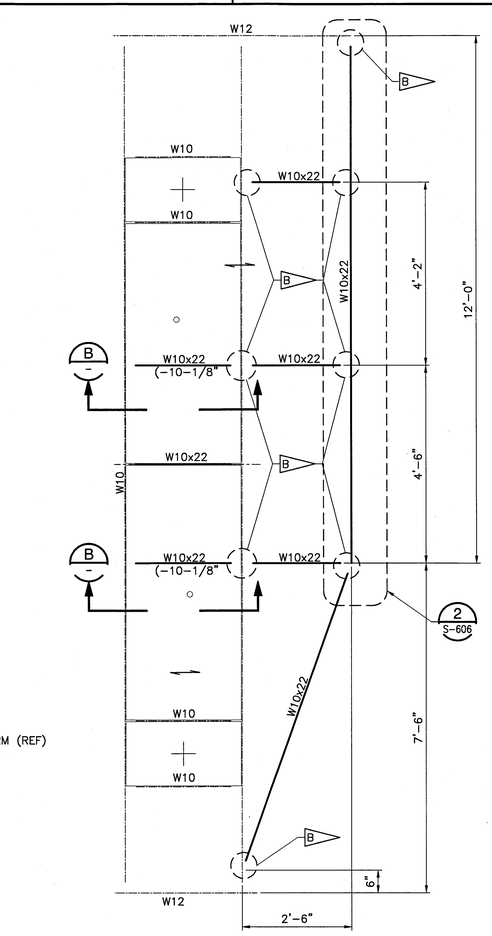

ENLARGED PLAN VIEW 4 S-600
SCALE: 3/4"=1'-0"

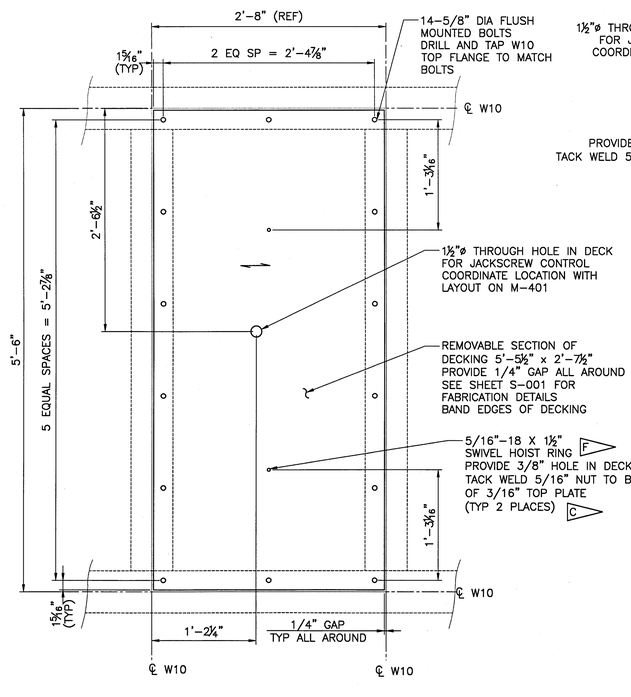

HATCH DETAIL 8 S-600
SCALE: 1 1/2"=1'-0"

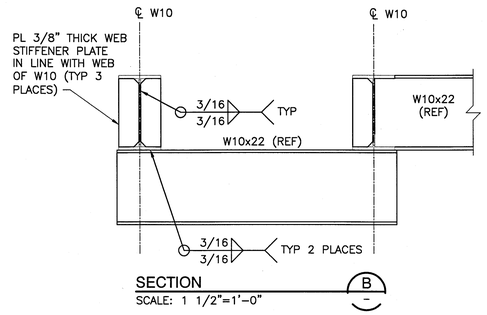

SECTION B
SCALE: 1 1/2"=1'-0"

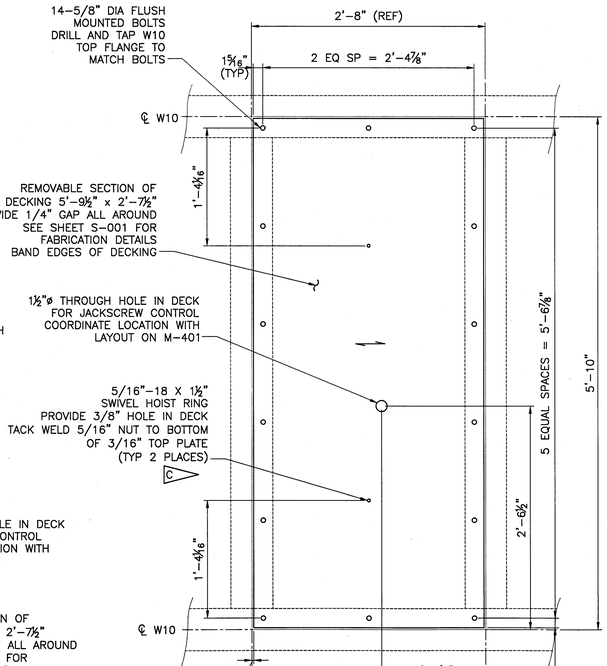

HATCH DETAIL 9 S-600
SCALE: 1 1/2"=1'-0"

SPECIFIC NOTES:

A. REMOVE SUPPORT CORBELS PRIOR TO LOWERING AND REMOVING EXISTING ELEVATOR PLATFORMS FOR MODIFICATION.

B. CONNECTION TO BE A FULL PENETRATION WELD OF THE TOP AND BOTTOM FLANGES AND THE WEB TO THE INTERSECTING MEMBER.

C. PROVIDE 2 SETS OF HOIST RINGS PER TOWER, 4 TOTAL.

D. PROVIDE SNAP BLANKS FOR HOLES IN DECK HATCHES.

E. PAINT REMOVABLE HATCHES GREEN.

F. SWIVEL HOIST RING WITH A 5/16"-18 X 1-1/2" BOLT. WORKING LOAD LIMIT OF 800 LBS AND PROOF TESTED TO A 2-1/2 TIMES THE WORKING LOAD LIMIT. BOLT SHALL BE GRADE 8 ALLOY WITH A SOCKET HEAD CAP SCREW TO MEET ASTM A574 WITH UNC THREADS. HOIST RING SHALL HAVE AN INNER RADIUS OF 0.46 INCHES AND A DIAMETER OF 0.34 INCHES. OVERALL SHACKLE HEIGHT SHALL BE 2.72 INCHES AND AN OVERALL WIDTH OF 1.87 INCHES.

G. 1/2"-13 THREADED GRADE 5 STEEL T-HANDLE BOLT. BOLT SHALL HAVE AN OVERALL LENGTH OF 3-3/4" WITH A THREAD LENGTH OF 2-1/2". HANDLE LENGTH SHALL BE 2" LONG AND 1/2" DIAMETER.

LEGEND:

SPAN DIRECTION OF INVERTED 1.5B GAUGE METAL DECK WITH 3/16" THICK STEEL PLATE ATTACHED TO METAL DECK PER THE SDI FABRICATION REQUIREMENTS. PROVIDE 1-3/8" HOLE THRU TOP OF DECK FOR FASTENER INSTALLATION. INSTALL1/2" DIA-13 (A307/A325 HDG) THRU BOLT WITH HEAVY DUTY, LOCKING HEX NUTS. ONLY 2 BOLTS PER 24" WIDE DECK PANEL AT EACH BEAM ARE REQUIRED. PROVIDE SNAP BLANKS TO CLOSE HOLES IN TOP OF DECK. EXTEND DECKING TO EDGE OF PERIMETER BEAM FLANGES. SEE A-SHEETS FOR LIMITS OF DECKING.

1 9"6"3"0 1 2 3
3/4 IN = 1 FT

1 9" 6" 3" 0 1
1 1/2 IN = 1 FT

0 3" 6" 9" 1'
3 IN = 1 FT

WHEN PRINTED FULL SIZE, THIS SHEET IS 34"X44"
THIS COMPUTER DRAWING WAS
CREATED IN AUTOCAD AND
FILED UNDER THE DRAWING NUMBER

S-602

SYM	ZONE	DESCRIPTION	DATE	APPROVAL
		REVISIONS		

RS&H IMPROVING YOUR WORLD
Reynolds, Smith and Hills, Inc.
115 Alma Blvd, Suite 101
Merritt Island, Florida 32953-4101
(321) 453-0212 (321) 453-0223 FAX
www.rsandh.com

SIGNATURES	DATE
DRAWN: JOSEPH HAUER	08-20-2013
CHECKED: DONNA HAMMERSTEN	08-20-2013
SUBMITTED/ARCHIVING OF RECORD: RICHARD PRUSS	08-20-2013
ST OF LICENSURE: FL	
LICENSE NO: 74624	
APPROVED: JOHN KEROSMAR FOR	8.20.13
MIKE HARTNETT	11/5/13

NATIONAL AERONAUTICS AND SPACE ADMINISTRATION
JOHN F. KENNEDY SPACE CENTER, NASA
KENNEDY SPACE CENTER, FLORIDA

LAUNCH COMPLEX 39
VEHICLE ASSEMBLY BUILDING

MODIFY VEHICLE ASSEMBLY BUILDING HIGH BAY 3 FOR SLS – ELEVATOR LANDINGS ELEVATOR LANDING DETAILS -2

FILE NO.	SIZE	DWG. NO.	REV
302-6058-043	E	79K39665	

PROJ. NO. PCN 99000.5 SHEET 16 OF

NOTICE -- WHEN GOVERNMENT DRAWINGS, SPECIFICATIONS, OR OTHER DATA ARE USED FOR ANY PURPOSE OTHER THAN IN CONNECTION WITH A DEFINITELY RELATED GOVERNMENT PROCUREMENT OPERATION, THE UNITED STATES GOVERNMENT THEREBY INCURS NO RESPONSIBILITY NOR ANY OBLIGATION WHATSOEVER, AND THE FACT THAT THE GOVERNMENT MAY HAVE FORMULATED, FURNISHED, OR IN ANY WAY SUPPLIED THE SAID DRAWINGS, SPECIFICATIONS, OR OTHER DATA IS NOT TO BE REGARDED BY IMPLICATION OR OTHERWISE AS IN ANY MANNER LICENSING THE HOLDER OR ANY OTHER PERSON OR CORPORATION, OR CONVEYING ANY RIGHTS OR PERMISSION TO MANUFACTURE, USE, OR SELL ANY PATENTED INVENTION THAT IN ANY WAY BE RELATED THERETO.

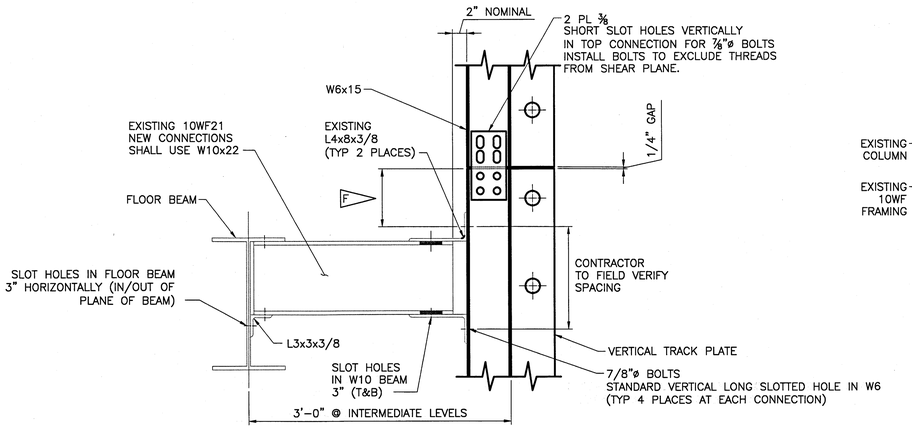

NOTE: CONNECTIONS EXIST BETWEEN FLOOR LEVELS 9 AND 36. NEW CONNECTIONS SHALL BE PROVIDED AT FLOOR LEVELS 7 AND 8.

ELEVATOR HANGER - INTERMEDIATE CONNECTION DETAIL FOR COLUMNS WHERE FLOOR FRAMING EXISTS (2 / S-604)
SCALE: 1-1/2"=1'-0"

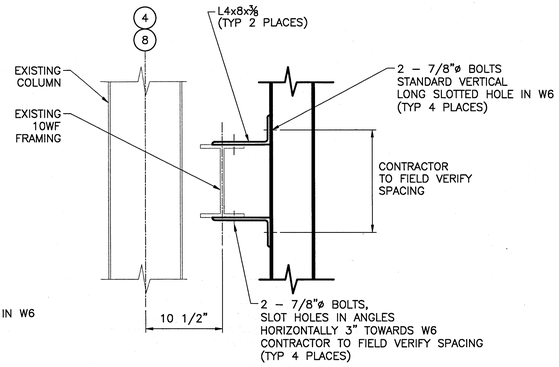

NOTE: CONNECTIONS EXIST BETWEEN FLOOR LEVELS 9 AND 36 ALONG COLUMN LINES 4 AND 8. VERTICAL TRACK PLATE NOT SHOWN FOR CLARITY.

ELEVATOR HANGER - INTERMEDIATE CONNECTION DETAIL FOR COLUMNS WHERE FLOOR FRAMING DOES NOT EXIST (3 / S-604)
SCALE: 1-1/2"=1'-0"

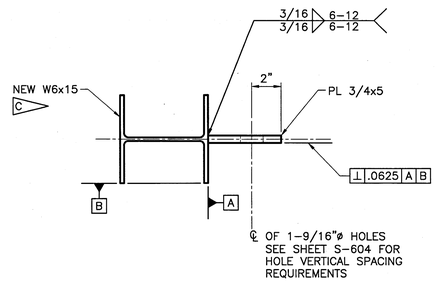

DETAIL (3 / A, S-601 / S-604) G
SCALE: 3"=1'-0"

SPECIFIC NOTES:

A. ALL NEW PLATE STEEL IS A572 GR 50 UNLESS OTHERWISE NOTED.

B. ALL NEW STRUCTURAL SHAPES ARE CARBON STEEL A992 GR 50 UNLESS OTHERWISE NOTED.

C. USE EXISTING 6WF15 TO VAB CONNECTIONS. REMOVE EXISTING 6WF15, NOT TO BE REUSED.

D. ALL FRAMING MEMBERS SHALL BE STANDARD AISC CONNECTIONS DESIGNED TO THE 13th EDITION AISC STEEL MANUAL REQUIREMENTS. THE FOLLOWING MINIMUM ASD DESIGN LOADS SHALL BE MET FOR:
W6s AXIAL: 14 KIPS

E. ALL CONNECTIONS WITH SLOTTED HOLES SHALL USE 3/8" THICK (MIN) PLATE WASHER PER SECTION J3.2OF THE 13TH EDITION AISC STEEL MANUAL REQUIREMENTS.

F. DIMENSION VARIES BASED ON RAIL TYPE BEING USED. SEE SHEET S-604 FOR SPECIFIC RAIL TYPE INFORMATION.

G. CONTRACTOR TO PERFORM A SCAN OF ALL EXISTING RAILS PRIOR TO REMOVAL AND SUBMIT FOR APPROVAL. CONTRACTOR SHALL NOT PROCEED WITH REMOVAL OF THE RAILS UNTIL THE SCAN RESULTS ARE APPROVED. THE CONTRACTOR SHALL SCAN THE NEW RAILS AFTER INSTALLATION TO VERIFY THE RAILS MEET THE TOLERANCES ON S-600, S-604 AND S-605. ALL RAILS OUT OF TOLERANCE SHALL BE REINSTALLED AND RESCANNED AT THE CONTRACTORS EXPENSE. THE CONTRACTOR SHALL NOT PROCEED WITH INSTALLATION OF THE PLATFORMS UNTIL FINAL ACCEPTANCE OF THE RAIL INSTALLATION IS ACCEPTED BY THE GOVERNMENT. RAILS MUST BE INSTALLED TO MATCH THE TOLERANCES PROVIDED IN DETAIL 3, THIS SHEET, AND IN THE PLAN VIEW, THIS SHEET.

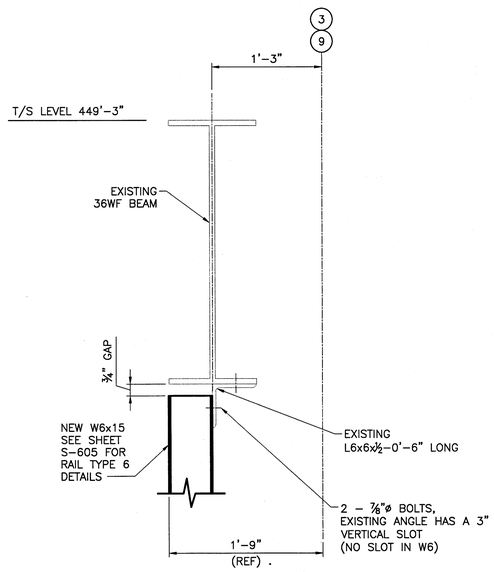

ELEVATOR HANGER - TOP CONNECTION DETAIL FOR COLUMN LINES 3 AND 9 (1 / S-605)
SCALE: 1-1/2"=1'-0"

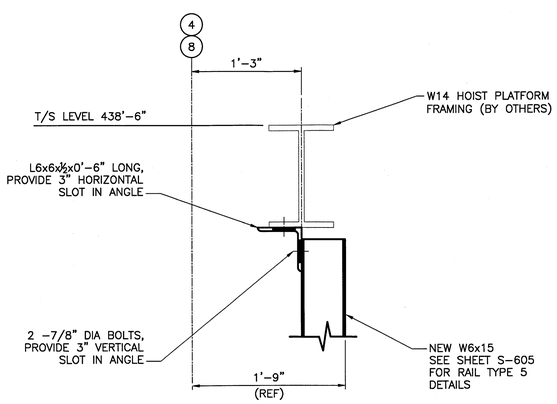

ELEVATOR HANGER - TOP CONNECTION DETAIL FOR COLUMN LINES 4 AND 8 (4 / S-605)
SCALE: 1-1/2"=1'-0"

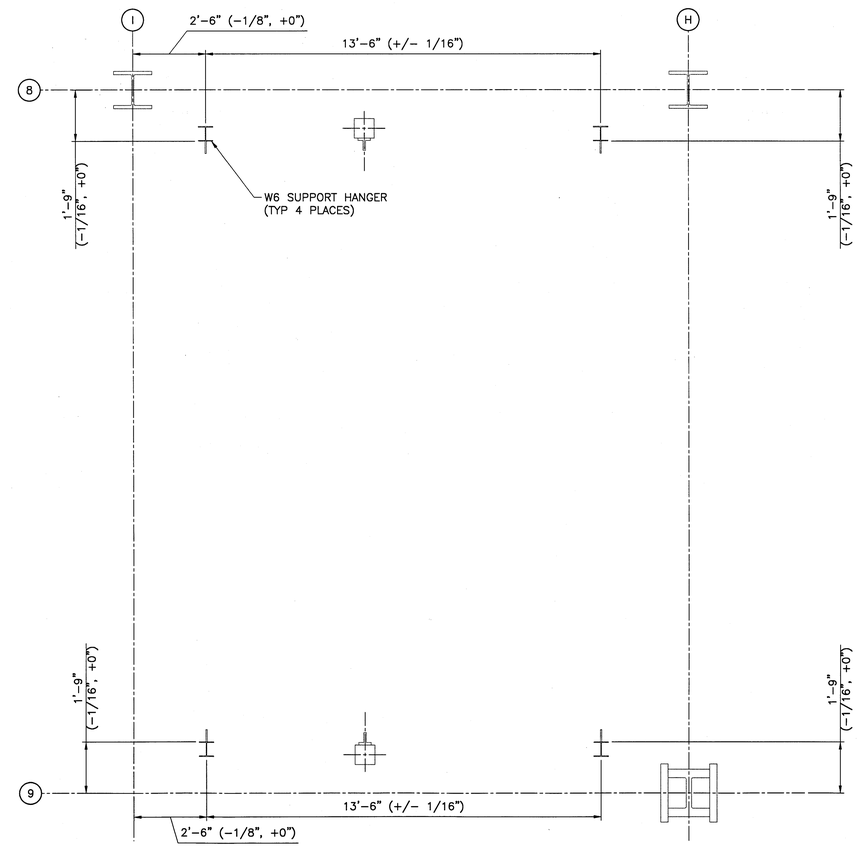

(TOWER E SHOWN)
(TOWER F OPPOSITE HAND)

W6 INSTALLATION PLAN VIEW (G)
SCALE: 3/8"=1'-0"

1 6" 0 1 2 3 4 5
1/2 IN = 1 FT

1 9" 6" 3" 0 1
1 1/2 IN = 1 FT

0 3" 6" 9" 1'
3 IN = 1 FT

WHEN PRINTED FULL SIZE, THIS SHEET IS 34"X44"
THIS COMPUTER DRAWING WAS CREATED IN AUTOCAD AND FILED UNDER THE DRAWING NUMBER
S-603

SYM	ZONE	DESCRIPTION	DATE	APPROVAL
REVISIONS				

RS&H IMPROVING YOUR WORLD
Reynolds, Smith and Hills, Inc.
115 Alma Blvd. Suite 101
Merritt Island, Florida 32953-4101
(321) 453-0212 (321) 453-0223 FAX
www.rsandh.com

SIGNATURES	DATE
DRAWN: JOSEPH HAUER	08-20-2013
CHECKED: STEVE MOORE	08-20-2013
SUBMITTED: ARCH/ENG OF RECORD RICHARD PRUSS	08-20-2013
ST OF LICENSURE: FL LICENSE NO: 74624	
APPROVED: JOHN KERCSMAR	8.20.13
MIKE HARTNETT	11/5/13

NATIONAL AERONAUTICS AND SPACE ADMINISTRATION
JOHN F. KENNEDY SPACE CENTER, NASA
KENNEDY SPACE CENTER, FLORIDA

LAUNCH COMPLEX 39
VEHICLE ASSEMBLY BUILDING
MODIFY VEHICLE ASSEMBLY BUILDING HIGH BAY 3 FOR SLS - ELEVATOR LANDINGS
ELEVATOR LANDING
DETAILS -3

FILE NO. 302-6058-043 | SIZE E | DWG. NO. 79K39665 | REV
PROJ. NO. PCN 99000.5 | SHEET 17 OF

NOTICE — WHEN GOVERNMENT DRAWINGS, SPECIFICATIONS, OR OTHER DATA ARE USED FOR ANY PURPOSE OTHER THAN IN CONNECTION WITH A DEFINITELY RELATED GOVERNMENT PROCUREMENT OPERATION, THE UNITED STATES GOVERNMENT THEREBY INCURS NO RESPONSIBILITY NOR ANY OBLIGATION WHATSOEVER, AND THE FACT THAT THE GOVERNMENT MAY HAVE FORMULATED, FURNISHED, OR IN ANY WAY SUPPLIED THE SAID DRAWINGS, SPECIFICATIONS, OR OTHER DATA IS NOT TO BE REGARDED BY IMPLICATION OR OTHERWISE AS IN ANY MANNER LICENSING THE HOLDER OR ANY OTHER PERSONS OR CORPORATION, OR CONVEYING ANY RIGHTS OR PERMISSION TO MANUFACTURE, USE, OR SELL ANY PATENTED INVENTION THAT IN ANY WAY BE RELATED THERETO.

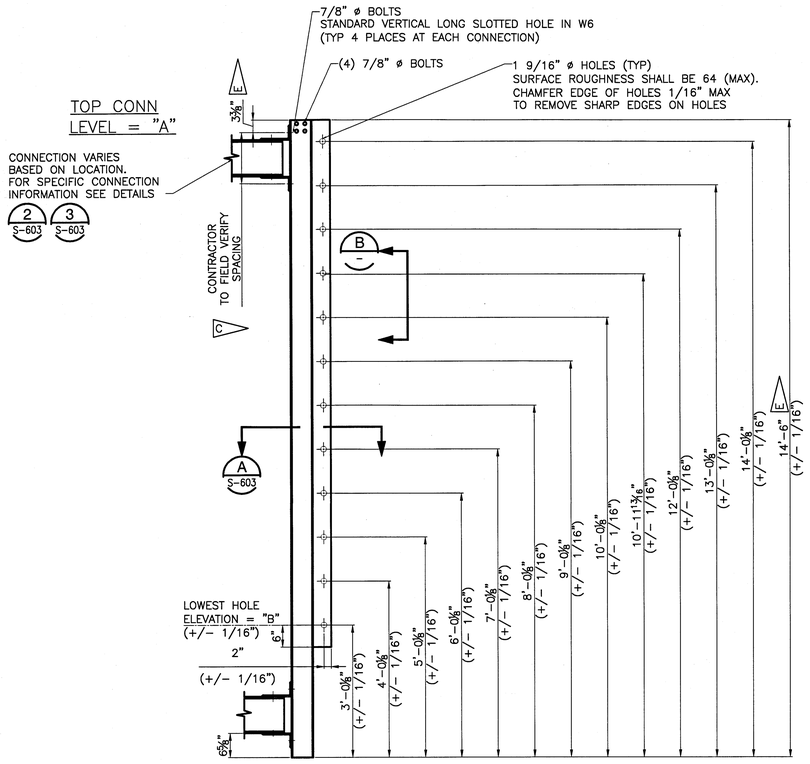

RAIL TYPE 1
SCALE: 3/4"=1'-0"

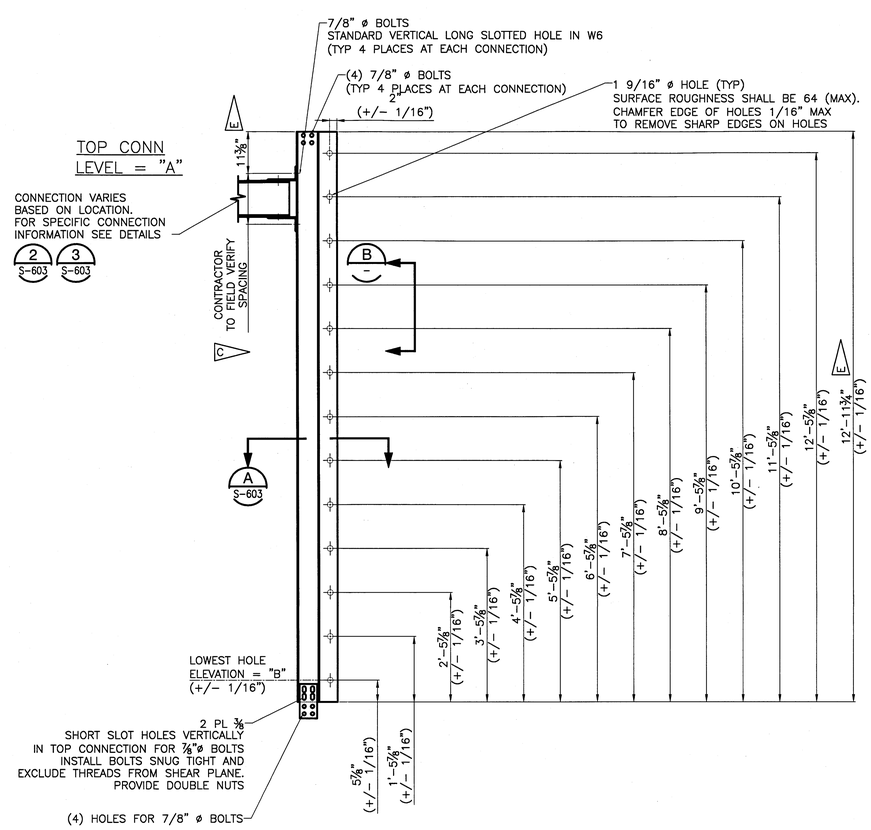

RAIL TYPE 3
SCALE: 3/4"=1'-0"

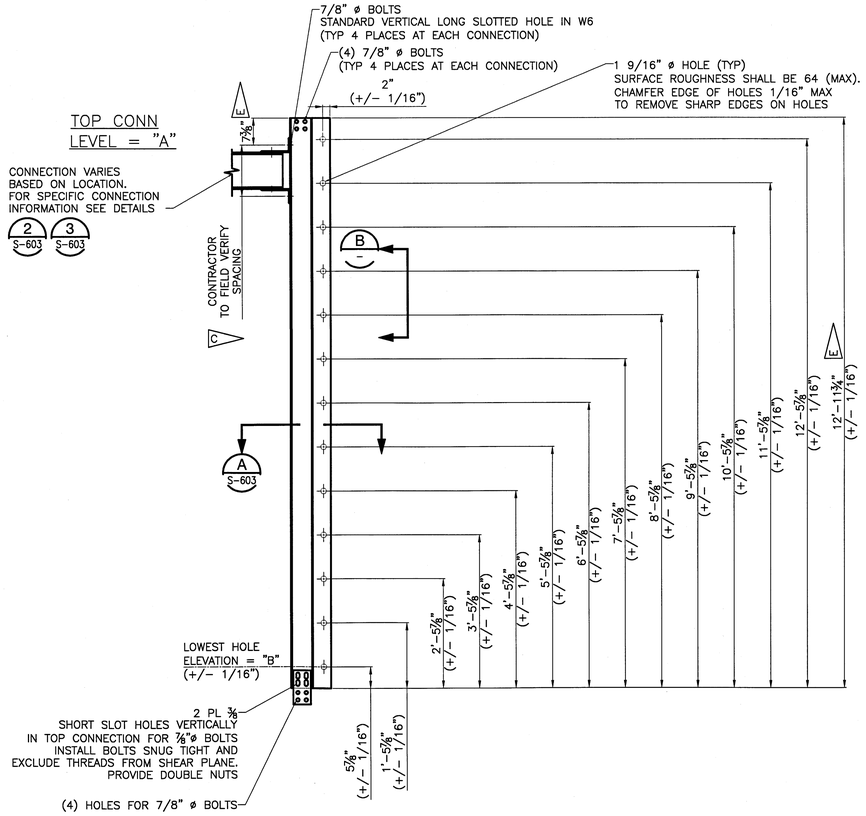

RAIL TYPE 2
SCALE: 3/4"=1'-0"

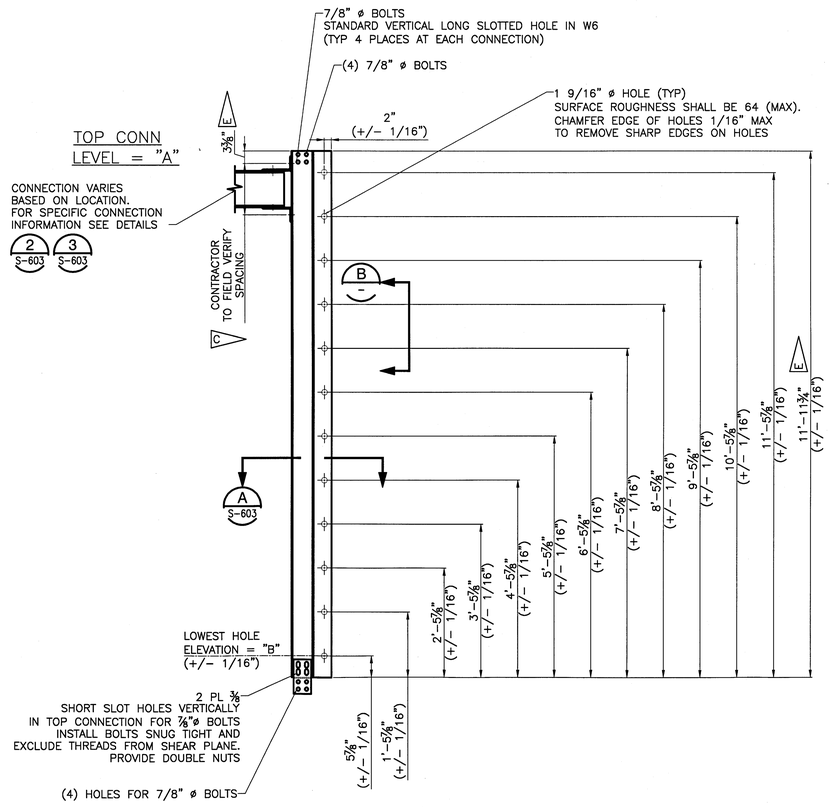

RAIL TYPE 4
SCALE: 3/4"=1'-0"

SPECIFIC NOTES:

A. ALL NEW PLATE STEEL IS A572 GR 50 UNLESS OTHERWISE NOTED.

B. ALL NEW STRUCTURAL SHAPES ARE CARBON STEEL A992 GR 50 UNLESS OTHERWISE NOTED.

C. USE EXISTING 6WF15 TO VAB CONNECTIONS. REMOVE EXISTING 6WF15.

D. ALL FRAMING MEMBERS SHALL BE STANDARD AISC CONNECTIONS DESIGNED TO THE 13th EDITION AISC STEEL MANUAL REQUIREMENTS. THE FOLLOWING MINIMUM ASD DESIGN LOADS SHALL BE MET FOR:
W6s AXIAL: 14 KIPS

E. CONTRACTOR TO FIELD VERIFY CONNECTION SPACING PRIOR TO CUTTING W6 SHAPES.

F. SEE SHEET S-603 FOR W6 INSTALLATION TOLERANCES.

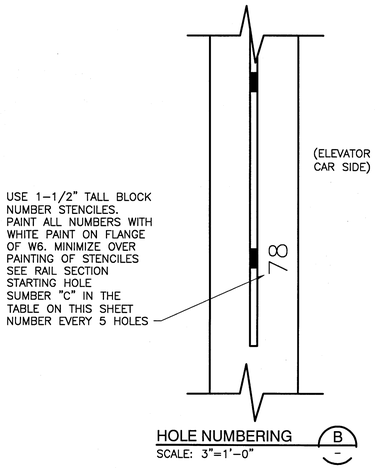

HOLE NUMBERING
SCALE: 3"=1'-0"

TOP CONN LEVEL "A"	COLUMN LINE	RAIL TYPE	LOWEST HOLE ELEVATION (INSTALLED) "B"	RAIL SECTION STARTING HOLE NUMBER "C"
8	3, 4, 8, AND 9	1	79'-0"	78
9	3, 4, 8, AND 9	2	91'-0"	90
10	3, 4, 8, AND 9	3	104'-0"	103
11	3, 4, 8, AND 9	4	117'-0"	116
12	3, 4, 8, AND 9	2	129'-0"	128
13	3, 4, 8, AND 9	3	142'-0"	141
14	3, 4, 8, AND 9	4	155'-0"	154
15	3, 4, 8, AND 9	2	167'-0"	166
16	3, 4, 8, AND 9	3	180'-0"	179
17	3, 4, 8, AND 9	4	193'-0"	192
18	3, 4, 8, AND 9	2	205'-0"	204
19	3, 4, 8, AND 9	3	218'-0"	217
20	3, 4, 8, AND 9	4	231'-0"	230
21	3, 4, 8, AND 9	2	243'-0"	242
22	3, 4, 8, AND 9	3	256'-0"	255
23	3, 4, 8, AND 9	4	269'-0"	268
24	3, 4, 8, AND 9	2	281'-0"	280
25	3, 4, 8, AND 9	3	294'-0"	293
26	3, 4, 8, AND 9	4	307'-0"	306
27	3, 4, 8, AND 9	2	319'-0"	318
28	3, 4, 8, AND 9	3	332'-0"	331
29	3, 4, 8, AND 9	4	345'-0"	344
30	3, 4, 8, AND 9	2	357'-0"	356
31	3, 4, 8, AND 9	3	370'-0"	369
32	3, 4, 8, AND 9	4	383'-0"	382
33	3, 4, 8, AND 9	2	395'-0"	394
34	3, 4, 8, AND 9	3	408'-0"	407
35	3, 4, 8, AND 9	4	421'-0"	420

0 3" 6" 9" 1'
3 IN = 1 FT

1 9"6"3"0 1 2 3
3/4 IN = 1 FT

WHEN PRINTED FULL SIZE, THIS SHEET IS 34"X44"
THIS COMPUTER DRAWING WAS
CREATED IN AUTOCAD AND
FILED UNDER THE DRAWING NUMBER

S-604

SYM	ZONE	DESCRIPTION	DATE	APPROVAL
		REVISIONS		

RS+H IMPROVING YOUR WORLD
Reynolds, Smith and Hills, Inc.
115 Alma Blvd, Suite 101
Merritt Island, Florida 32953-4101
(321) 453-0212 (321) 453-0223 FAX
www.rsandh.com

SIGNATURES	DATE
DRAWN: JOSEPH HAUER	08-20-2013
CHECKED: STEVE MOORE	08-20-2013
SUBMITTED, ARCHITECT OF RECORD: RICHARD PRUSS	08-20-2013
ST OF LICENSURE: FL LICENSE NO: 74624	
APPROVED: JOHN KERCSMAR	8.20.13
MIKE HARTNETT	11/5/13

NATIONAL AERONAUTICS AND SPACE ADMINISTRATION
JOHN F. KENNEDY SPACE CENTER, NASA
KENNEDY SPACE CENTER, FLORIDA

LAUNCH COMPLEX 39
VEHICLE ASSEMBLY BUILDING

MODIFY VEHICLE ASSEMBLY BUILDING HIGH BAY 3 FOR SLS – ELEVATOR LANDINGS
ELEVATOR LANDING
DETAILS –4

FILE NO. 302-6058-043 | SIZE E | DWG. NO. 79K39665 | REV
PROJ. NO. PCN 99000.5 | SHEET 18 OF

NOTICE — WHEN GOVERNMENT DRAWINGS, SPECIFICATIONS, OR OTHER DATA ARE USED FOR ANY PURPOSE OTHER THAN IN CONNECTION WITH A DEFINITELY RELATED GOVERNMENT PROCUREMENT OPERATION, THE UNITED STATES GOVERNMENT THEREBY INCURS NO RESPONSIBILITY NOR ANY OBLIGATION WHATSOEVER, AND THE FACT THAT THE GOVERNMENT MAY HAVE FORMULATED, FURNISHED, OR IN ANY WAY SUPPLIED THE SAID DRAWINGS, SPECIFICATIONS OR ANY OTHER DATA IS NOT TO BE REGARDED BY IMPLICATION OR OTHERWISE IN ANY MANNER LICENSING THE HOLDER OR ANY OTHER PERSON OR CORPORATION, OR CONVEYING ANY RIGHTS OR PERMISSION TO MANUFACTURE, USE, OR SELL ANY PATENTED INVENTION THAT IN ANY WAY BE RELATED THERETO.

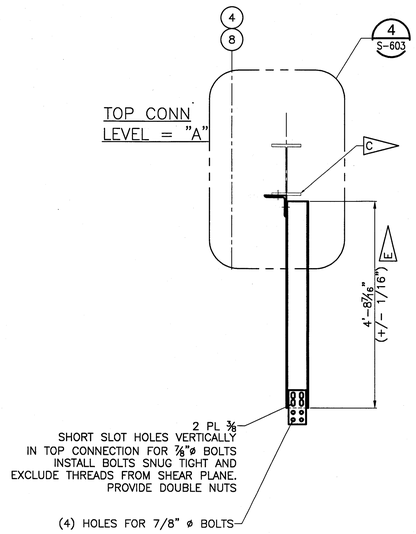

RAIL TYPE 5
SCALE: 3/4"=1'-0"

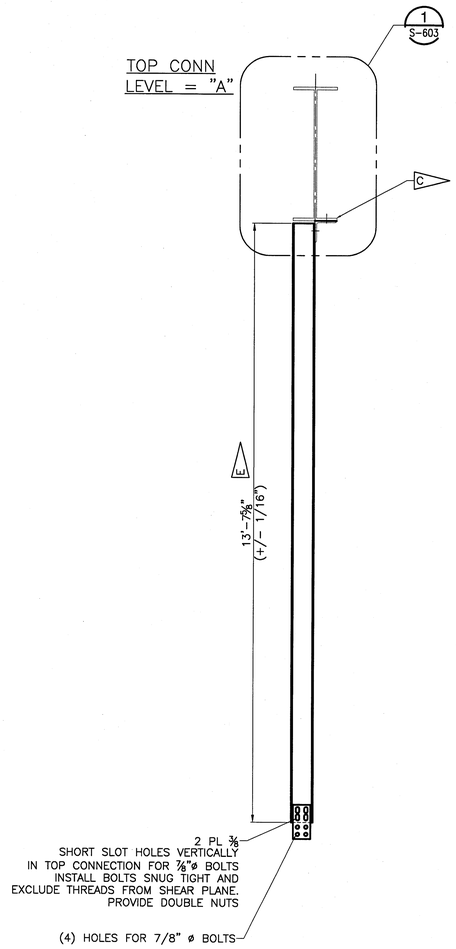

RAIL TYPE 6
SCALE: 3/4"=1'-0"

SPECIFIC NOTES:

A. ALL NEW PLATE STEEL IS A572 GR 50 UNLESS OTHERWISE NOTED.

B. ALL NEW STRUCTURAL SHAPES ARE CARBON STEEL A992 GR 50 UNLESS OTHERWISE NOTED.

C. USE EXISTING 6WF15 TO VAB CONNECTIONS. REMOVE EXISTING 6WF15, NOT TO BE REUSED.

D. ALL FRAMING MEMBERS SHALL BE STANDARD AISC CONNECTIONS DESIGNED TO THE 13th EDITION AISC STEEL MANUAL REQUIREMENTS. THE FOLLOWING MINIMUM ASD DESIGN LOADS SHALL BE MET FOR:
W6s AXIAL: 14 KIPS

E. CONTRACTOR TO FIELD VERIFY CONNECTION SPACING PRIOR TO CUTTING W6 SHAPES.

F. SEE SHEET S-603 FOR W6 INSTALLATION TOLERANCES.

TOP CONN LEVEL "A"	COLUMN LINE	RAIL TYPE	LOWEST HOLE ELEVATION (INSTALLED) "B"	RAIL SECTION STARTING HOLE NUMBER "C"
36	4 AND 8	5	–	–
36	3 AND 9	6	–	–

1 9"6"3"0 1 2 3
3/4 IN = 1 FT

WHEN PRINTED FULL SIZE, THIS SHEET IS 34"X44"
THIS COMPUTER DRAWING WAS
CREATED IN AUTOCAD AND
FILED UNDER THE DRAWING NUMBER

S-605

SYM	ZONE	DESCRIPTION	DATE	APPROVAL

REVISIONS

RS&H IMPROVING YOUR WORLD
Reynolds, Smith and Hills, Inc.
115 Alma Blvd, Suite 101
Merritt Island, Florida 32953-4101
(321) 453-0212 (321) 453-0223 FAX
www.rsandh.com

SIGNATURES	DATE
DRAWN: JOSEPH HAUER	08-20-2013
CHECKED: STEVE MOORE	08-20-2013
SUBMITTED: ARCHENG OF RECORD RICHARD PRUSS	08.20.2013
ST OF LICENSURE: FL	
LICENSE NO: 71624	
APPROVED: JOHN KERCSMAR FOR	8.20.13
MIKE HARTNETT	11/5/13

NATIONAL AERONAUTICS AND SPACE ADMINISTRATION
JOHN F. KENNEDY SPACE CENTER, NASA
KENNEDY SPACE CENTER, FLORIDA

LAUNCH COMPLEX 39
VEHICLE ASSEMBLY BUILDING

MODIFY VEHICLE ASSEMBLY BUILDING HIGH BAY 3 FOR SLS – ELEVATOR LANDINGS
ELEVATOR LANDING DETAILS –5

FILE NO.	SIZE	DWG. NO.	REV
302-6058-043	E	79K39665	

PROJ. NO. PCN 99000.5 SHEET 19 OF

NOTICE — WHEN GOVERNMENT DRAWINGS, SPECIFICATIONS, OR OTHER DATA ARE USED FOR ANY PURPOSE OTHER THAN IN CONNECTION WITH A DEFINITELY RELATED GOVERNMENT PROCUREMENT OPERATION, THE UNITED STATES GOVERNMENT INCURS NO RESPONSIBILITY NOR ANY OBLIGATION WHATSOEVER; AND THE FACT THAT THE GOVERNMENT MAY HAVE FORMULATED, FURNISHED, OR IN ANY WAY SUPPLIED THE SAID DRAWINGS, SPECIFICATIONS OR ANY OTHER DATA IS NOT TO BE REGARDED BY IMPLICATION OR OTHERWISE IN ANY MANNER LICENSING THE HOLDER OR ANY OTHER PERSON OR CORPORATION, OR CONVEYING ANY RIGHTS OR PERMISSION TO MANUFACTURE, USE, OR SELL ANY PATENTED INVENTION THAT IN ANY WAY BE RELATED THERETO.

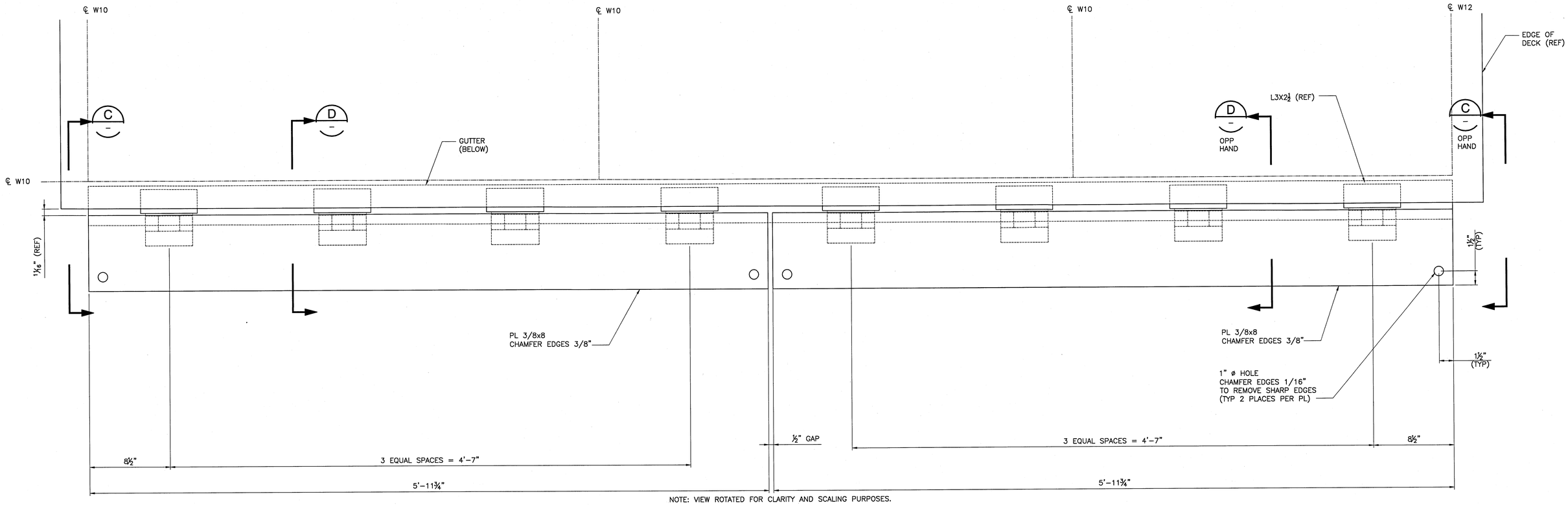

NOTE: VIEW ROTATED FOR CLARITY AND SCALING PURPOSES.

RAMP DETAIL (2 / S-602)
SCALE: 3"=1'-0"

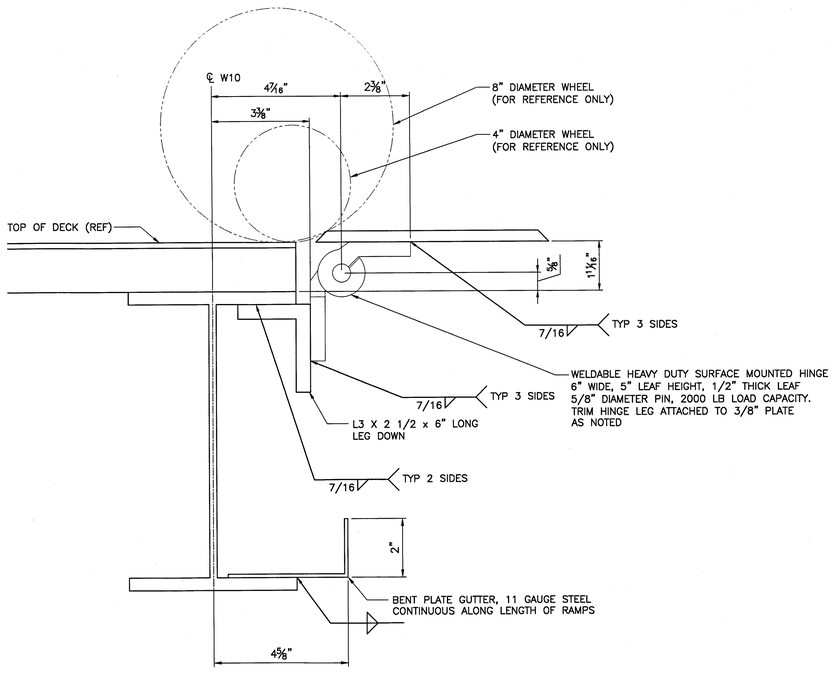

SECTION (D / –)
SCALE: 6"=1'-0"

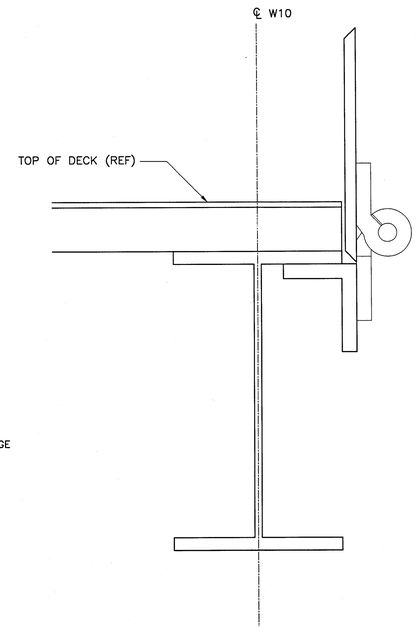

TYPICAL DETAIL - RAMP IN STORED POSITION
SCALE: 6"=1'-0"

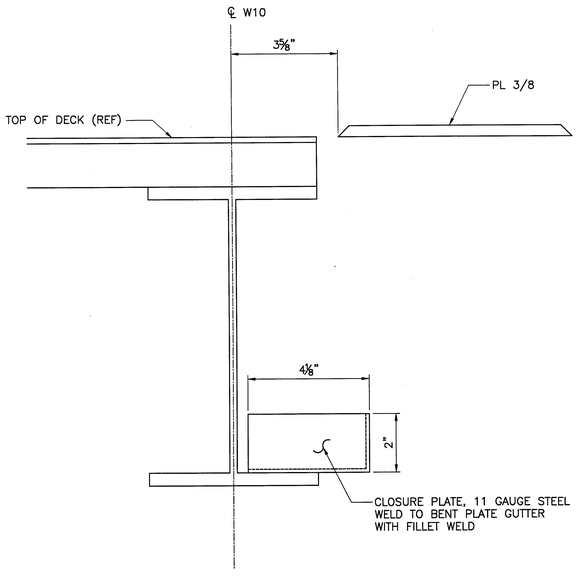

VIEW (C / –)
SCALE: 6"=1'-0"

0 3" 6"
6 IN = 1 FT

0 3" 6" 9" 1'
3 IN = 1 FT

WHEN PRINTED FULL SIZE, THIS SHEET IS 34"X44"
THIS COMPUTER DRAWING WAS CREATED IN AUTOCAD AND FILED UNDER THE DRAWING NUMBER
S-606

SYM	ZONE	DESCRIPTION	DATE	APPROVAL
		REVISIONS		

RS&H IMPROVING YOUR WORLD
Reynolds, Smith and Hills, Inc.
115 Alma Blvd. Suite 101
Merritt Island, Florida 32953-4101
(321) 453-0212 (321) 453-0223 FAX
www.rsandh.com

SIGNATURES		DATE
DRAWN:	JOSEPH HAUER	08-20-2013
CHECKED:	STEVE MOORE	08-20-2013
SUBMITTED: ARCHIVING OF RECORD	RICHARD PRUSS	08-20-2013
ST OF LICENSURE: FL		
LICENSE NO:	74624	
APPROVED:	JOHN KERCSMAR	8.20.13
	MIKE HARTNETT	11/5/13

NATIONAL AERONAUTICS AND SPACE ADMINISTRATION
JOHN F. KENNEDY SPACE CENTER, NASA
KENNEDY SPACE CENTER, FLORIDA

LAUNCH COMPLEX 39
VEHICLE ASSEMBLY BUILDING

MODIFY VEHICLE ASSEMBLY BUILDING HIGH BAY 3 FOR SLS – ELEVATOR LANDINGS ELEVATOR LANDING DETAILS –6

FILE NO.	SIZE	DWG. NO.	REV
302-6058-043	E	79K39665	

PROJ. NO. PCN 99000.5 SHEET 20 OF

NOTICE — WHEN GOVERNMENT DRAWINGS, SPECIFICATIONS, OR OTHER DATA ARE USED FOR ANY PURPOSE OTHER THAN IN CONNECTION WITH A DEFINITELY RELATED GOVERNMENT PROCUREMENT OPERATION, THE UNITED STATES GOVERNMENT THEREBY INCURS NO RESPONSIBILITY NOR ANY OBLIGATION WHATSOEVER; AND THE FACT THAT THE GOVERNMENT MAY HAVE FORMULATED, FURNISHED, OR IN ANY WAY SUPPLIED THE SAID DRAWINGS, SPECIFICATIONS OR ANY OTHER DATA IS NOT TO BE REGARDED BY IMPLICATION OR OTHERWISE IN ANY MANNER LICENSING THE HOLDER OR ANY OTHER PERSONS OR CORPORATION, OR CONVEYING ANY RIGHTS OR PERMISSION TO MANUFACTURE, USE, OR SELL ANY PATENTED INVENTION THAT IN ANY WAY BE RELATED THERETO.

SPECIFIC NOTES:

A. PROVIDE ANCHOR PLATE TO MATCH PROVIDED FALL PROTECTION POST.
DBI SALA PART NUMBER: 8510816
MILLER PART NUMBER: DH-AP-5/
UCL ADVANCED SAFETY SYSTEMS PART NUMBER: 17423

B. CONTRACTOR SHALL PROVIDE (12) PORTABLE FALL PROTECTION POSTS
DBI SALA PART NUMBER: 8516691
MILLER PART NUMBER: DH-AP-1/
UCL ADVANCED SAFETY SYSTEMS PART NUMBER: 16691

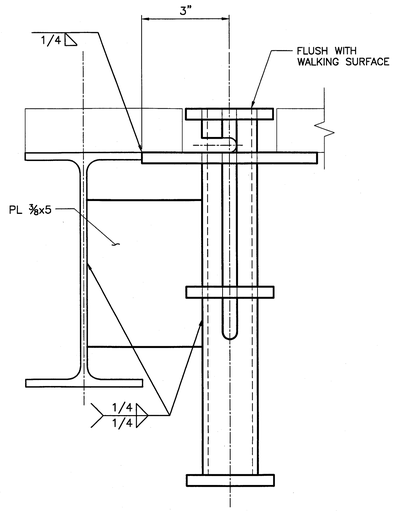

SECTION B
SCALE: 6"=1'-0"

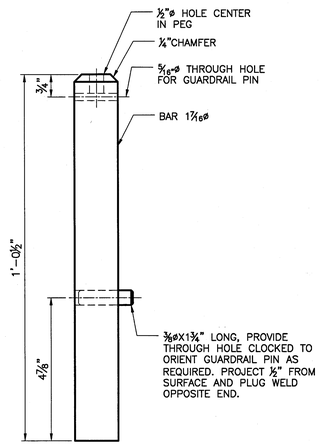

DETAIL 1
SCALE: 6"=1'-0"

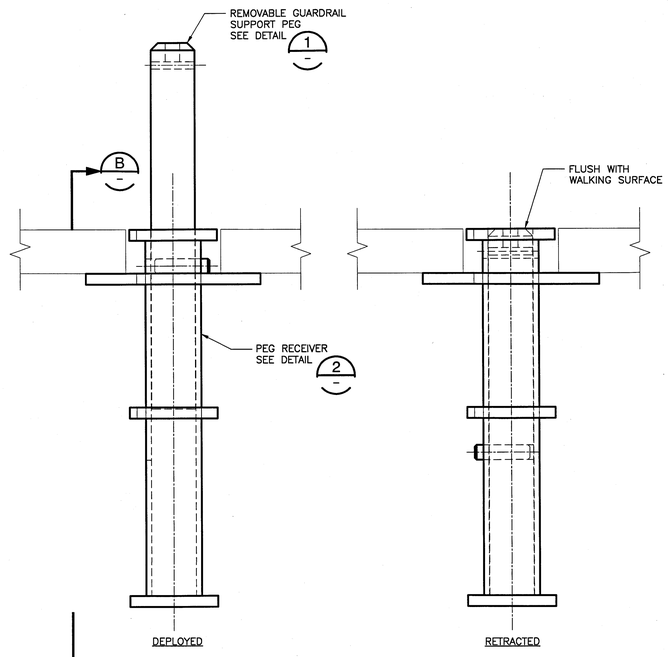

REMOVABLE GUARDRAIL BASE DETAIL
SCALE: 6"=1'-0"

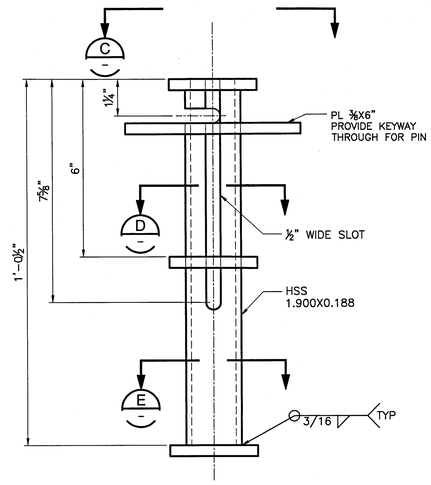

DETAIL 2
SCALE: 6"=1'-0"

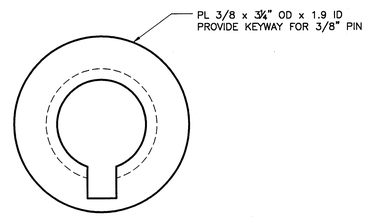

VIEW C
SCALE: 1'-0"=1'-0"

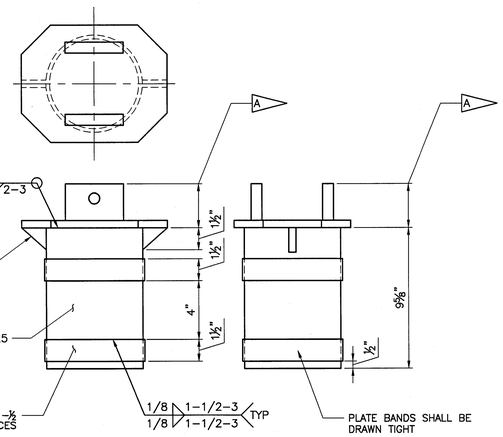

(12 REQUIRED)

FALL ARREST POST BASE
SCALE: 3"=1'-0"

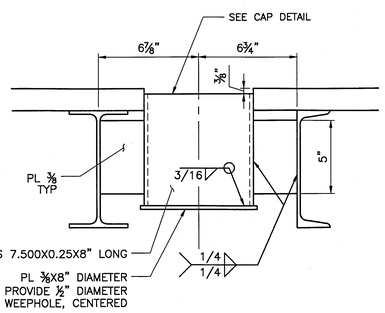

SECTION A
SCALE: 3"=1'-0"

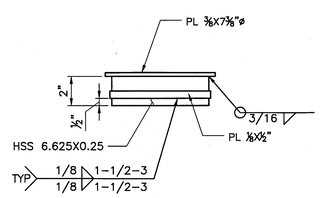

(6 PER PLATFORM)

CAP DETAIL
SCALE: 3"=1'-0"

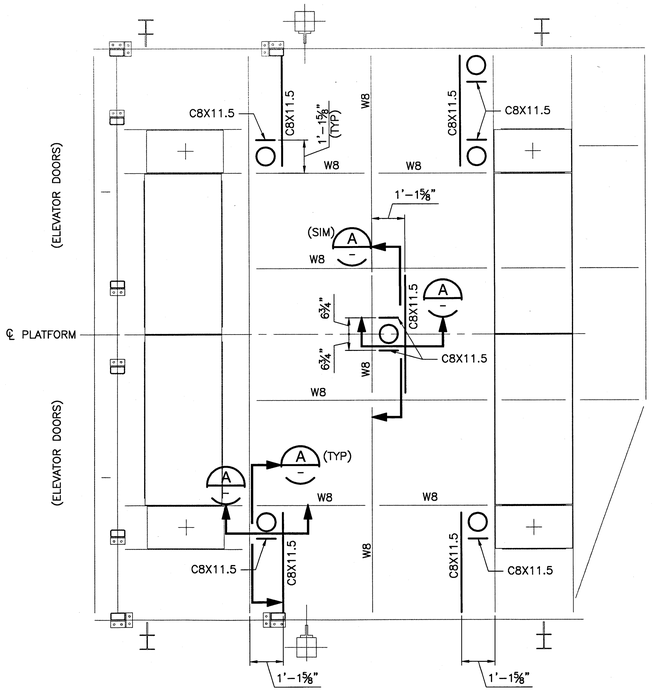

FALL ARREST AT ELEVATOR LANDINGS - PLAN
SCALE: 1/2"=1'-0"

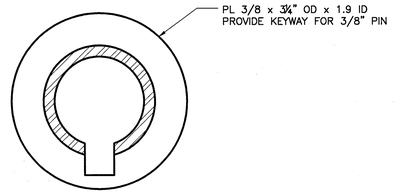

SECTION D
SCALE: 1'-0"=1'-0"

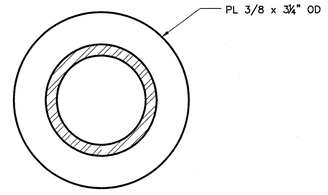

SECTION E
SCALE: 1'-0"=1'-0"

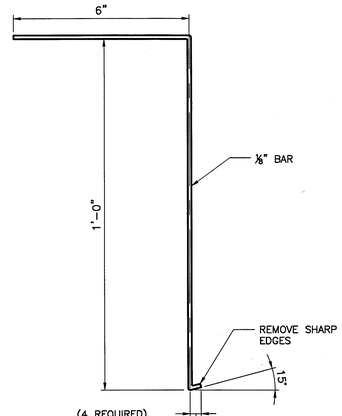

PEG EXTRACTION DEVICE DETAIL
SCALE: 6"=1'-0"

1 6" 0 1 2 3 4 5
1/2 IN = 1 FT

0 3" 6" 9" 1'
3 IN = 1 FT

0 3" 6"
6 IN = 1 FT

WHEN PRINTED FULL SIZE, THIS SHEET IS 34"X44"
THIS COMPUTER DRAWING WAS CREATED IN AUTOCAD AND FILED UNDER THE DRAWING NUMBER

S-607

SYM	ZONE	DESCRIPTION	DATE	APPROVAL
		REVISIONS		

RS&H IMPROVING YOUR WORLD
Reynolds, Smith and Hills, Inc.
115 Alma Blvd, Suite 101
Merritt Island, Florida 32953-4101
(321) 453-0212 (321) 453-0223 FAX
www.rsandh.com

SIGNATURES		DATE
DRAWN:	JOSEPH HAUER	08-20-2013
CHECKED:	MIKE KENDRICK	08-20-2013
SUBMITTED/ARCHEING OF RECORD:	JAMES BALMER	08.20.2013
ST OF LICENSURE: FL LICENSE NO: 54670		
APPROVED:	JOHN KERCSMAR FOR	8.20.13
	MIKE HARTNETT	8/30/13

NATIONAL AERONAUTICS AND SPACE ADMINISTRATION
JOHN F. KENNEDY SPACE CENTER, NASA
KENNEDY SPACE CENTER, FLORIDA

LAUNCH COMPLEX 39
VEHICLE ASSEMBLY BUILDING

MODIFY VEHICLE ASSEMBLY BUILDING HIGH BAY 3 FOR SLS - ELEVATOR LANDINGS ELEVATOR LANDING DETAILS -7

FILE NO. 302-6058-043 | SIZE E | DWG. NO. 79K39665 | REV
PROJ. NO. PCN 99000.5 | SHEET 21 OF

NOTICE -- WHEN GOVERNMENT DRAWINGS, SPECIFICATIONS, OR OTHER DATA ARE USED FOR ANY PURPOSE OTHER THAN IN CONNECTION WITH A DEFINITELY RELATED GOVERNMENT PROCUREMENT OPERATION, THE UNITED STATES GOVERNMENT THEREBY INCURS NO RESPONSIBILITY NOR ANY OBLIGATION WHATSOEVER; AND THE FACT THAT THE GOVERNMENT MAY HAVE FORMULATED, FURNISHED, OR IN ANY WAY SUPPLIED THE SAID DRAWINGS, SPECIFICATIONS OR ANY OTHER DATA IS NOT TO BE REGARDED BY IMPLICATION OR OTHERWISE IN ANY MANNER LICENSING THE HOLDER OR ANY OTHER PERSONS OR CORPORATION, OR CONVEYING ANY RIGHTS OR PERMISSION TO MANUFACTURE, USE, OR SELL ANY PATENTED INVENTION THAT IN ANY WAY BE RELATED THERETO.

MECHANICAL GENERAL NOTES:

1. CLEAN COMPONENT PARTS PER MIL-S-5002 BEFORE WELDING.
2. WELD PER NASA-SPEC-5004. WELDERS AND WELDING OPERATORS SHALL BE QUALIFIED IN ACCORDANCE WITH AWS D1.1. ALL WELDS REQUIRE A CLASS B INSPECTION UNLESS NOTED AS CLASS A IN THE WELD SYMBOL OR IN THE WELDMENT NOTATION.
3. TOLERANCES:
   X.X +/- 0.1
   X.XX +/-0.01
   X.XXX +/- .005
   ANGLE +/- 0.5
4. FLOORING NOT SHOWN FOR CLARITY.
5. FOR ELEVATOR PLATFORM STRUCTURAL INFORMATION REFER TO SHEET S-600 THRU S-603.
6. JACKSCREW MAINTENANCE ACCESS HATCH FRAMING NOT SHOWN FOR CLARITY.

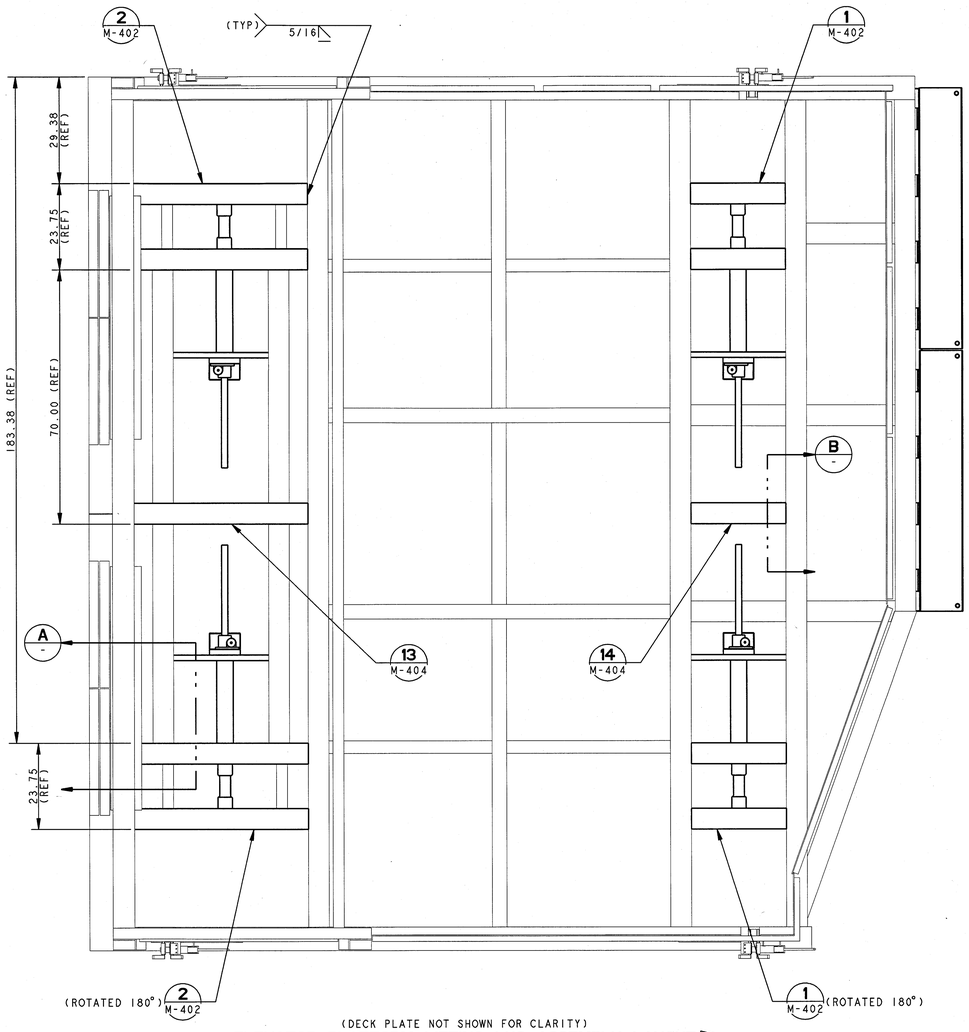

(DECK PLATE NOT SHOWN FOR CLARITY)

ELEVATOR PLATFORM LIFTING LUG ASSEMBLY LAYOUT 4

SCALE: 3/4" = 1'-0"

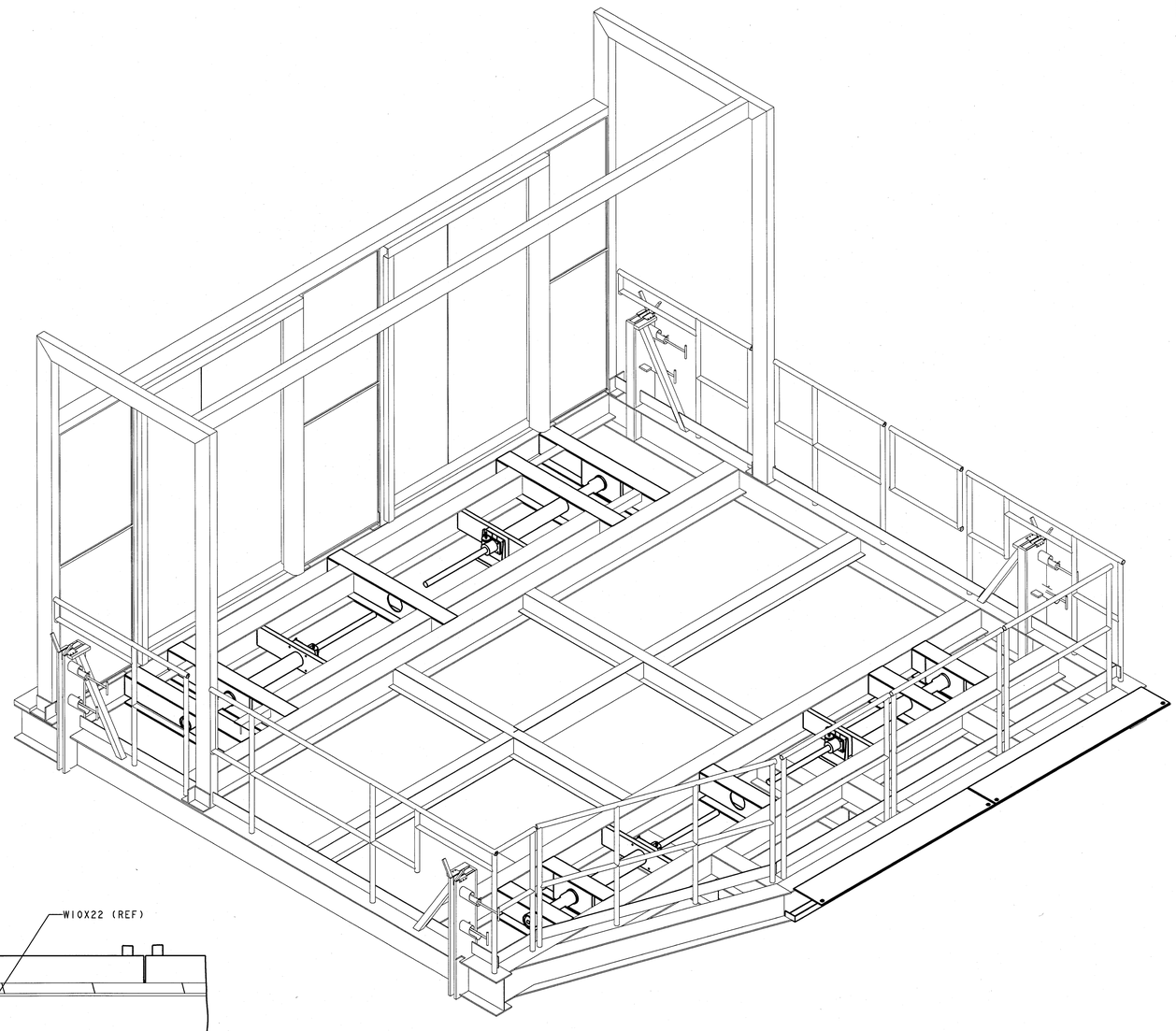

(DECK PLATE NOT SHOWN FOR CLARITY)

ELEVATOR PLATFORM LIFTING LUG ASSEMBLY ISO 4

SCALE: 3/4" = 1'-0"

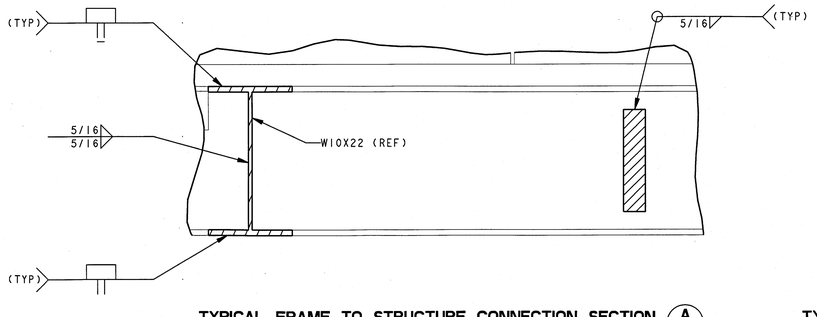

TYPICAL FRAME TO STRUCTURE CONNECTION SECTION A -

SCALE: 3" = 1'-0"

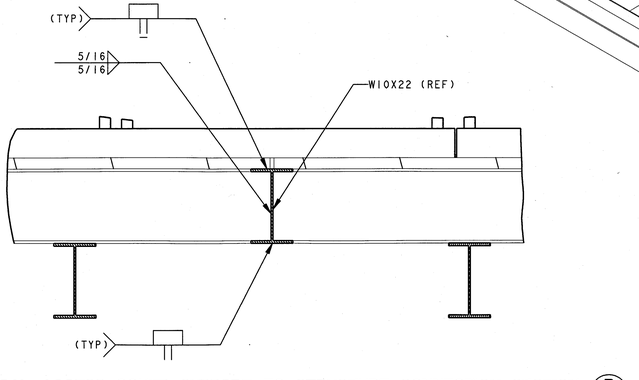

TYPICAL ACCESS COVER SUPPORT TO STRUCTURE CONNECTION SECTION B -

SCALE: 1 1/2" = 1'-0"

0 3" 6" 9" 1'
3 IN = 1 FT
1 9"6"3"0 1 2 3
3/4 IN = 1 FT
1 9" 6" 3" 0
1 1/2 IN = 1 FT

WHEN PRINTED FULL SIZE, THIS SHEET IS 34"X44"
THIS COMPUTER DRAWING WAS CREATED IN PRO/ENGINEER AND FILED UNDER THE DRAWING NUMBER

M-401

SYM	ZONE	DESCRIPTION	DATE	APPROVAL
		REVISIONS		

RS&H IMPROVING YOUR WORLD
Reynolds, Smith and Hills, Inc.
115 Alma Blvd, Suite 101
Merritt Island, Florida 32953-4101
(321) 453-0212 (321) 453-0223 FAX
www.rsandh.com

SIGNATURES		DATE
DRAWN:	JOE D'AMICO	08/20/2013
CHECKED:	DAVID KELLER	08/20/2013
SUBMITTED: ARCHIVING OF RECORD	ROBERT PRUSS	8/20/2013
ST OF LICENSURE: FL	LICENSE NO: 73357	
APPROVED:	STEVE MOORE FOR	8.20.13
	MIKE HARTNETT	11/5/13

NATIONAL AERONAUTICS AND SPACE ADMINISTRATION
JOHN F. KENNEDY SPACE CENTER, NASA
KENNEDY SPACE CENTER, FLORIDA

LAUNCH COMPLEX 39
VEHICLE ASSEMBLY BUILDING
MODIFY VEHICLE ASSEMBLY BUILDING
HIGH BAY 3 FOR SLS
ELEVATOR PLATFORM MECHANICAL
GENERAL NOTES/LIFTING LUG ASSEMBLY -1

FILE NO.	SIZE	DWG. NO.	REV
302-6058-043	E	79K39665	

PROJ. NO. PCN 99000.5 SHEET 22 OF

NOTICE -- WHEN GOVERNMENT DRAWINGS, SPECIFICATIONS, OR OTHER DATA ARE USED FOR ANY PURPOSE OTHER THAN IN CONNECTION WITH A DEFINITELY RELATED GOVERNMENT PROCUREMENT OPERATION, THE UNITED STATES GOVERNMENT THEREBY INCURS NO RESPONSIBILITY NOR ANY OBLIGATION WHATSOEVER; AND THE FACT THAT THE GOVERNMENT MAY HAVE FORMULATED, FURNISHED, OR IN ANY WAY SUPPLIED THE SAID DRAWINGS, SPECIFICATIONS OR ANY OTHER DATA IS NOT TO BE REGARDED BY IMPLICATION OR OTHERWISE IN ANY MANNER LICENSING THE HOLDER OR ANY OTHER PERSONS OR CORPORATION, OR CONVEYING ANY RIGHTS OR PERMISSION TO MANUFACTURE, USE, OR SELL ANY PATENTED INVENTION THAT IN ANY WAY BE RELATED THERETO.

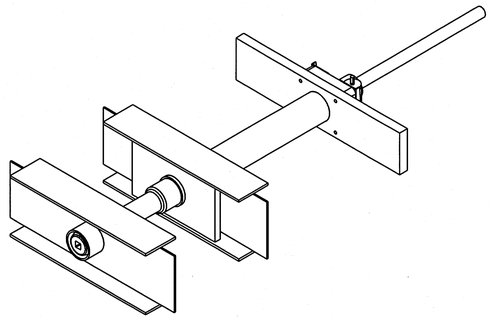

ELEVATOR PLATFORM LIFTING LUG ASSEMBLY - 1 ISO (1 / -)
SCALE: 1/2" = 1'-0"

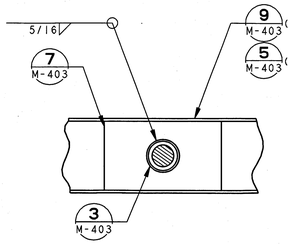

SECTION (A / -)
SCALE: 1 1/2" = 1'-0"

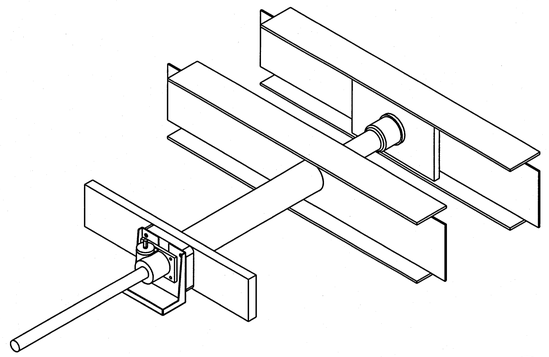

ELEVATOR PLATFORM LIFTING LUG ASSEMBLY - 2 ISO (2 / -)
SCALE: 1/2" = 1'-0"

SPECIFIC NOTES:

A. TO EXTEND AND RETRACT LIFTING LUG, ROTATE JACKSCREW HEX INPUT SHAFT USING APPROPRIATE SOCKET.

B. APPLY LOCTITE 242 OR EQUIVALENT PER MANUFACTURERS INSTRUCTION, TORQUE TO 780-790 IN/LBS.

C. APPLY LOCTITE 242 OR EQUIVALENT PER MANUFACTURERS INSTRUCTION, TORQUE TO 400-410 IN/LBS.

D. APPLY LOCTITE 242 OR EQUIVALENT PER MANUFACTURERS INSTRUCTION TO THREADS ON JACKSCREW PRIOR TO INSTALLING TO ITEM 8 (LIFTING LUG), TORQUE TO 655-685 IN/LBS. USE CAUTION WHEN TORQUEING ITEM 8 (LIFTING LUG) TO JACK SCREW SO NOT TO DAMAGE COMPONENTS.

E. TOP OF ITEM 10 AND 12 SHALL BE PARALLEL TO THE TOP FLANGE OF ITEMS 5 OR 9 PRIOR TO WELDING.

F. DUFF-NORTON JACK SCREW
P/N A1ESBTCNBB-024.0-02.4-A1IXA11
(OAE)
TYPE: MACHINE SCREW, 3 TON
MODEL SELECTION: INVERTED TRANSLATING
STROKE / LIFT (INCHES): 28.00
END CONDITION: 5/8"-18 UNF THREADED END WITH A COVER PIPE
CLOSED HEIGHT (INCHES): 2.100
DRIVE: (1) HEX INPUT SHAFT
SPECIAL FEATURE-BOTH WORM SHAFT HAVE HEX ENDS

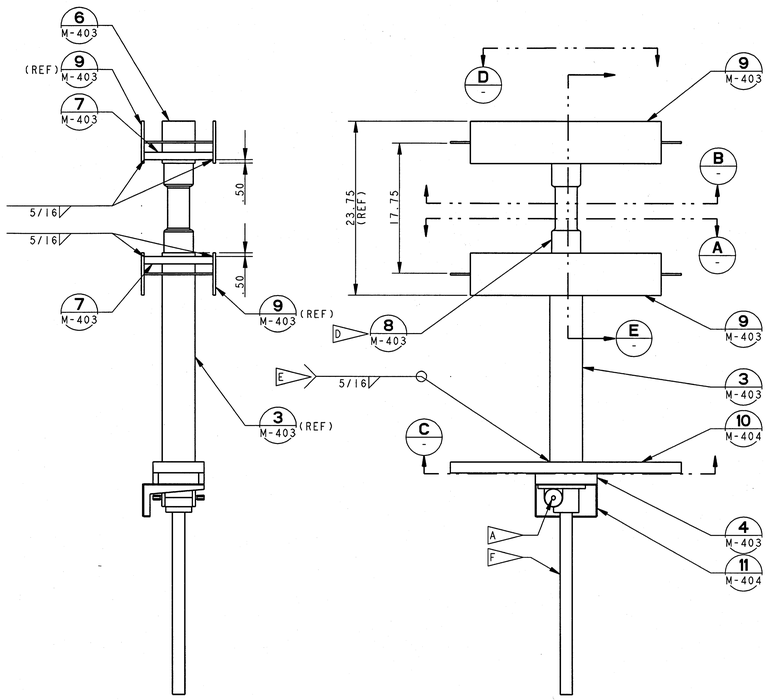

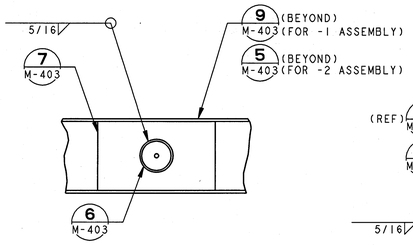

SECTION (B / -)
SCALE: 1 1/2" = 1'-0"

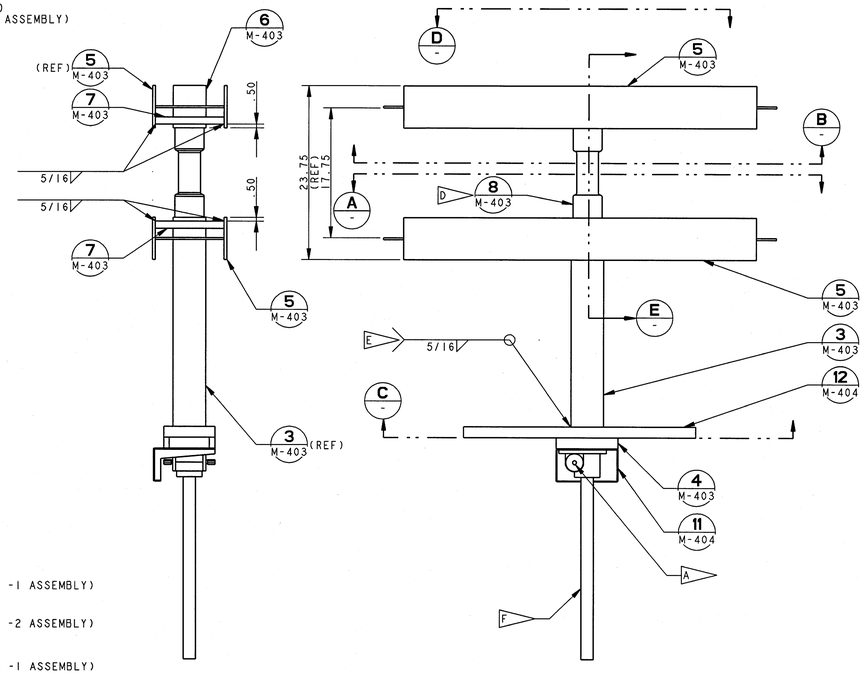

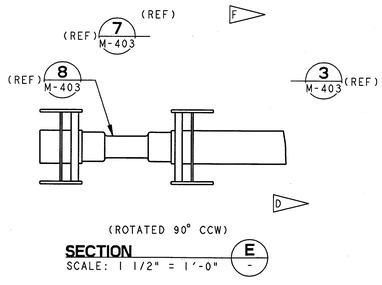

(ROTATED 90° CCW)

SECTION (E / -)
SCALE: 1 1/2" = 1'-0"

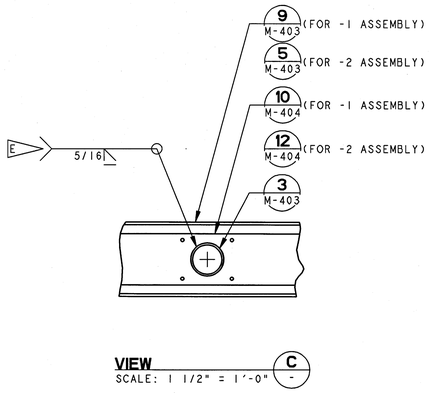

VIEW (C / -)
SCALE: 1 1/2" = 1'-0"

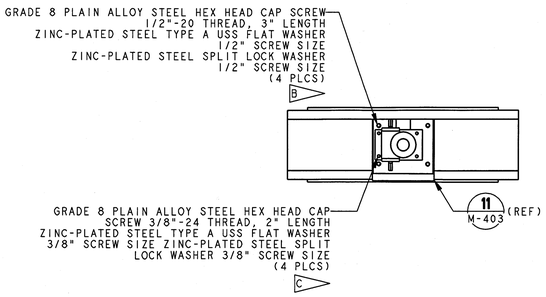

ELEVATOR PLATFORM LIFTING LUG ASSEMBLY - 1 (1 M-401 / 1 / -)
SCALE: 1/2" = 1'-0"

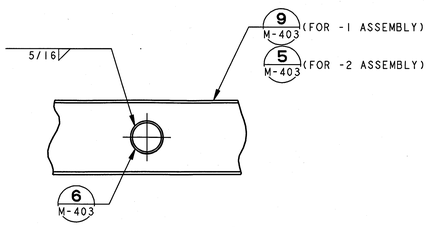

VIEW (D / -)
SCALE: 1 1/2" = 1'-0"

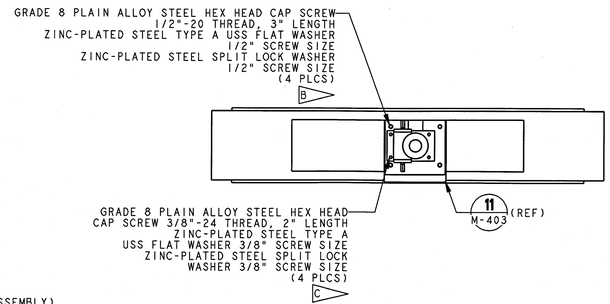

ELEVATOR PLATFORM LIFTING LUG ASSEMBLY - 2 (2 M-401 / 2 / -)
SCALE: 1/2" = 1'-0"

1 6" 0 1 2 3 4 5
1/2 IN = 1 FT

1 9" 6" 3" 0
1 1/2 IN = 1 FT

WHEN PRINTED FULL SIZE, THIS SHEET IS 34"X44"
THIS COMPUTER DRAWING WAS CREATED IN PRO/ENGINEER AND FILED UNDER THE DRAWING NUMBER

M-402

SYM	ZONE	DESCRIPTION	DATE	APPROVAL
		REVISIONS		

RS&H IMPROVING YOUR WORLD
Reynolds, Smith and Hills, Inc.
115 Alma Blvd, Suite 101
Merritt Island, Florida 32953-4101
(321) 453-0212 (321) 453-0223 FAX
www.rsandh.com

SIGNATURES	DATE
DRAWN: JOE D'AMICO	08/20/2013
CHECKED: DAVID KELLER	08/20/2013
SUBMITTER: ARCHIVING OF RECORD ROBERT PRUSS	8/20/2013
ST OF LICENSURE: FL	
LICENSE NO: 73550	
APPROVED: STEVE MOORE	8.20.13
MIKE HARTNETT	11/5/13

NATIONAL AERONAUTICS AND SPACE ADMINISTRATION
JOHN F. KENNEDY SPACE CENTER, NASA
KENNEDY SPACE CENTER, FLORIDA

LAUNCH COMPLEX 39
VEHICLE ASSEMBLY BUILDING
MODIFY VEHICLE ASSEMBLY BUILDING
HIGH BAY 3 FOR SLS
ELEVATOR PLATFORM
LIFTING LUG ASSEMBLY -2

FILE NO.	SIZE	DWG. NO.	REV
302-6058-043	E	79K39665	-
PROJ. NO. PCN 99000.5		SHEET 23 OF	

NOTICE -- WHEN GOVERNMENT DRAWINGS, SPECIFICATIONS, OR OTHER DATA ARE USED FOR ANY PURPOSE OTHER THAN IN CONNECTION WITH A DEFINITELY RELATED GOVERNMENT PROCUREMENT OPERATION, THE UNITED STATES GOVERNMENT THEREBY INCURS NO RESPONSIBILITY NOR ANY OBLIGATION WHATSOEVER; AND THE FACT THAT THE GOVERNMENT MAY HAVE FORMULATED, FURNISHED, OR IN ANY WAY SUPPLIED THE SAID DRAWINGS, SPECIFICATIONS OR ANY OTHER DATA, IS NOT TO BE REGARDED BY IMPLICATION OR OTHERWISE IN ANY MANNER LICENSING THE HOLDER OR ANY OTHER PERSONS OR CORPORATION, OR CONVEYING ANY RIGHTS OR PERMISSION TO MANUFACTURE, USE, OR SELL ANY PATENTED INVENTION THAT IN ANY WAY BE RELATED THERETO.

SPECIFIC NOTES:

A. ALL EDGES AND CORNERS SHALL BE FREE FROM BURRS.
B MATERIAL: STEEL PER ASTM A572 GRADE 50.
C MATERIAL: STEEL PER ASTM A992 GRADE 50.
D MATERIAL: 4" SCH 40 STEEL PIPE PER ASTM A500.
E MATERIAL: SOLID ROUND ROD PER ASTM 4140.

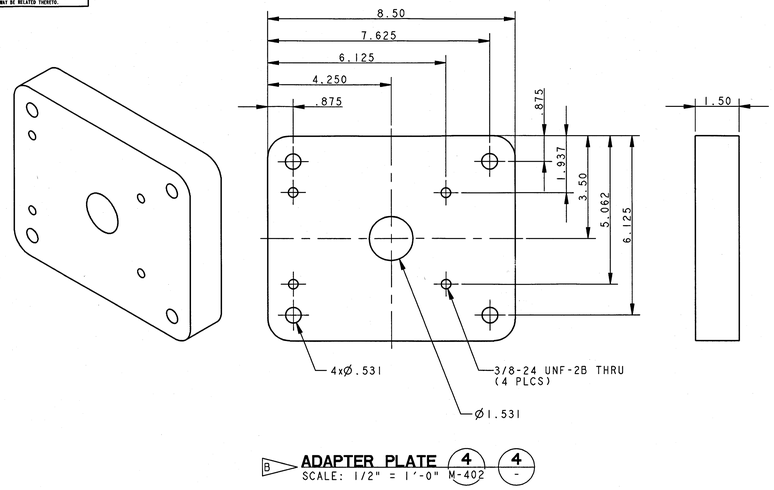

B **ADAPTER PLATE** (4) (4)
SCALE: 1/2" = 1'-0" M-402 -

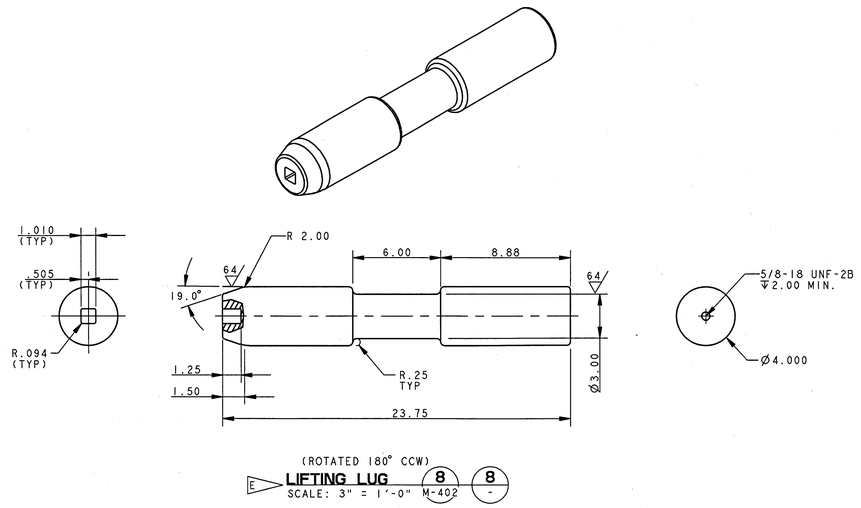

(ROTATED 180° CCW)
E **LIFTING LUG** (8) (8)
SCALE: 3" = 1'-0" M-402 -

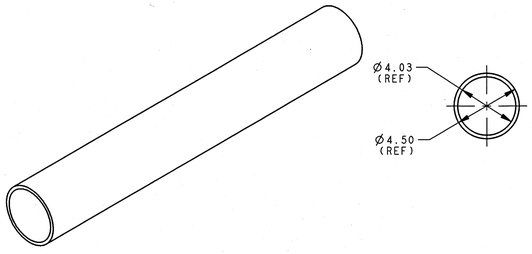

D **LIFTING LUG TRANSLATION TUBE** (3) (3)
SCALE: 3" = 1'-0" M-402 -

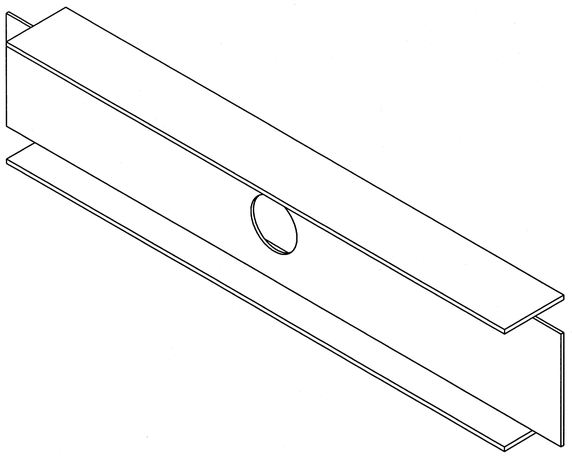

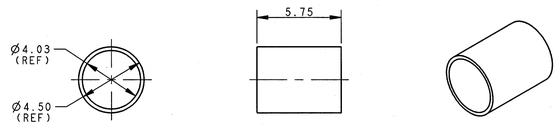

D **LIFTING LUG RECEIVING TUBE** (6) (6)
SCALE: 3" = 1'-0" M-402 -

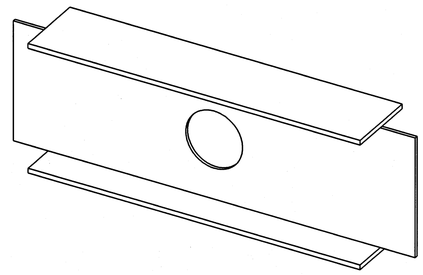

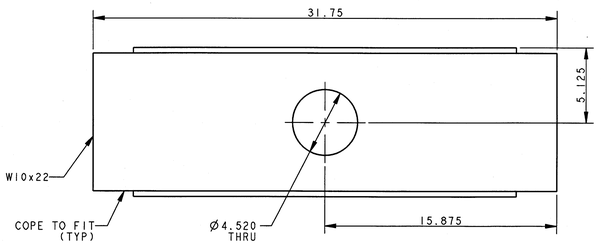

C **SHORT LIFTING LUG BEAM** (9) (9)
SCALE: 3" = 1'-0" M-402 -

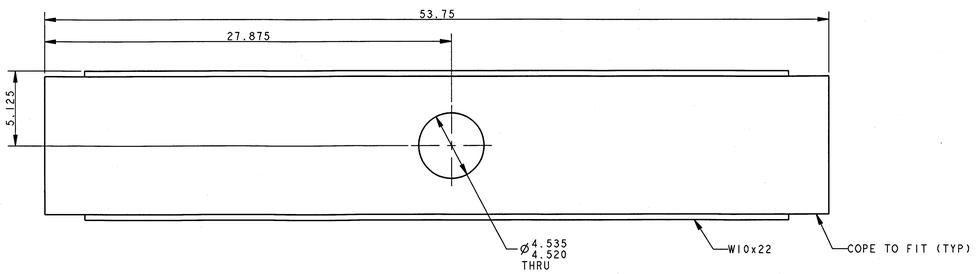

C **LIFTING LUG BEAM** (5) (5)
SCALE: 3" = 1'-0" M-402 -

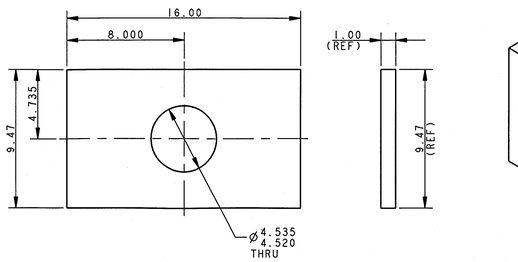

B **TUBE SUPPORT PLATE** (7) (7)
SCALE: 3" = 1'-0" M-402 -

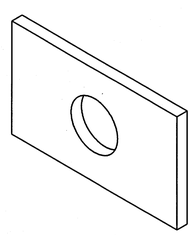

1 6" 0 1 2 3 4 5
1/2 IN = 1 FT
0 3" 6" 9" 1'
3 IN = 1 FT
0 3" 6"
6 IN = 1 FT

WHEN PRINTED FULL SIZE, THIS SHEET IS 34"X44"
THIS COMPUTER DRAWING WAS CREATED IN PRO/ENGINEER AND FILED UNDER THE DRAWING NUMBER

M-403

SYM	ZONE	DESCRIPTION	DATE	APPROVAL
REVISIONS				

RS+H IMPROVING YOUR WORLD
Reynolds, Smith and Hills, Inc.
115 Alma Blvd, Suite 101
Merritt Island, Florida 32953-4101
(321) 453-0212 (321) 453-0223 FAX
www.rsandh.com

SIGNATURES		DATE
DRAWN: JOE D'AMICO		08/20/2013
CHECKED: DAVID KELLER		08/20/2013
SUBMITTED: ARCH/ENG OF RECORD	ROBERT PRUSS	8/20/13
ST OF LICENSURE: FL LICENSE NO: 70350		
APPROVED	STEVE MOORE for	8.20.13
	MIKE HARTNETT	8/21/13

NATIONAL AERONAUTICS AND SPACE ADMINISTRATION
JOHN F. KENNEDY SPACE CENTER, NASA
KENNEDY SPACE CENTER, FLORIDA

LAUNCH COMPLEX 39
VEHICLE ASSEMBLY BUILDING
MODIFY VEHICLE ASSEMBLY BUILDING HIGH BAY 3 FOR SLS ELEVATOR PLATFORM LIFTING LUG ASSEMBLY DETAILS - 1

FILE NO. 302-6058-043 | SIZE E | DWG. NO. 79K39665 | REV
PROJ. NO. PCN 99000.5 | SHEET 24 OF

NOTICE -- WHEN GOVERNMENT DRAWINGS, SPECIFICATIONS, OR OTHER DATA ARE USED FOR ANY PURPOSE OTHER THAN IN CONNECTION WITH A DEFINITELY RELATED GOVERNMENT PROCUREMENT OPERATION, THE UNITED STATES GOVERNMENT THEREBY INCURS NO RESPONSIBILITY NOR ANY OBLIGATION WHATSOEVER; AND THE FACT THAT THE GOVERNMENT MAY HAVE FORMULATED, FURNISHED, OR IN ANY WAY SUPPLIED THE SAID DRAWINGS, SPECIFICATIONS OR ANY OTHER DATA IS NOT TO BE REGARDED BY IMPLICATION OR OTHERWISE IN ANY MANNER LICENSING THE HOLDER OR ANY OTHER PERSON OR CORPORATION, OR CONVEYING ANY RIGHTS OR PERMISSION TO MANUFACTURE, USE, OR SELL ANY PATENTED INVENTION THAT IN ANY WAY BE RELATED THERETO.

SPECIFIC NOTES:

A. ALL EDGES AND CORNERS SHALL BE FREE FROM BURRS.

B MATERIAL: STEEL PER ASTM A572 GRADE 50.

C MATERIAL: IIGA STEEL SHEET PER ASTM A1011.

D MATERIAL: STEEL PER ASTM A992 GRADE 50.

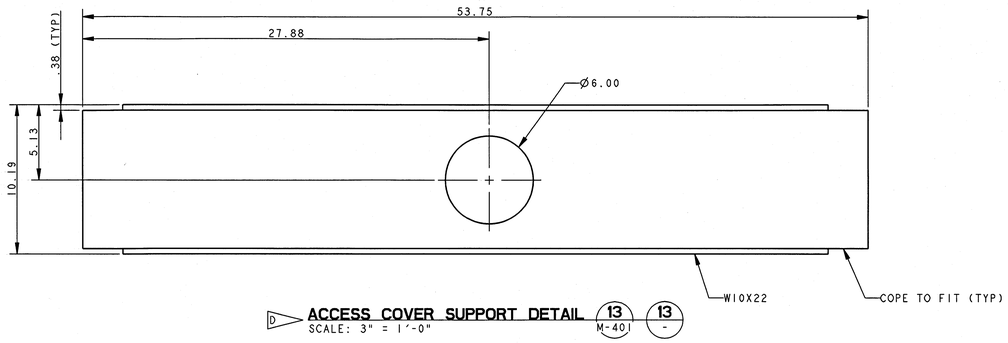

D ACCESS COVER SUPPORT DETAIL 13 / M-401 — 13 / -
SCALE: 3" = 1'-0"

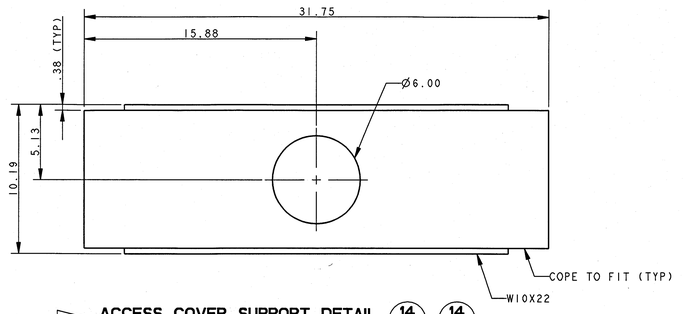

D ACCESS COVER SUPPORT DETAIL 14 / M-401 — 14 / -
SCALE: 3" = 1'-0"

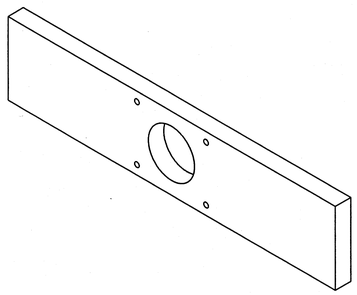

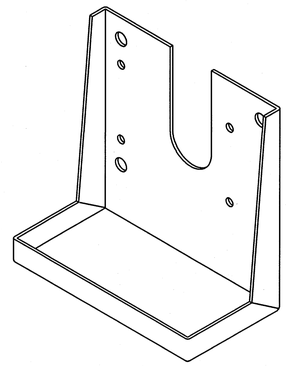

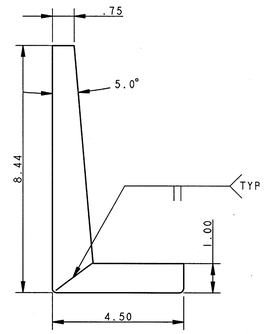

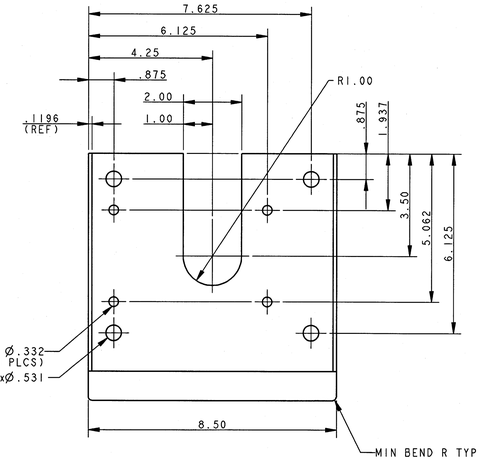

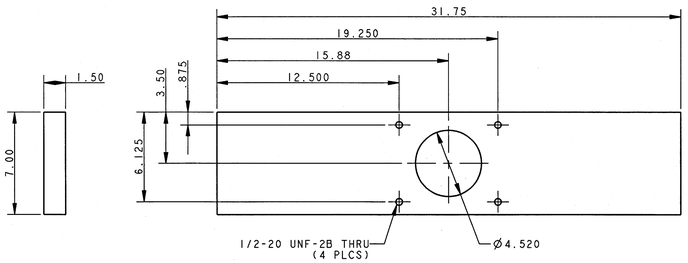

B END CAP MOUNTING PLATE 10 / M-402 — 10 / -
SCALE: 3" = 1'-0"

C GREASE CATCH PAN 11 / M-402 — 11 / -
SCALE: 6" = 1'-0"

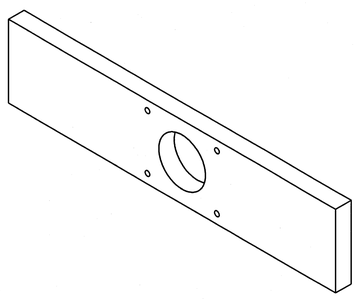

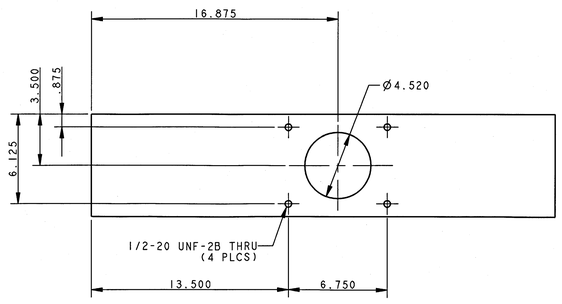

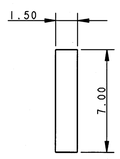

B END CAP MOUNTING PLATE 12 / M-402 — 12 / -
SCALE: 3" = 1'-0"

0 3" 6" 9" 1'
3 IN = 1 FT
0 3" 6"
6 IN = 1 FT
WHEN PRINTED FULL SIZE, THIS SHEET IS 34"X44"
THIS COMPUTER DRAWING WAS CREATED IN PRO/ENGINEER AND FILED UNDER THE DRAWING NUMBER

M-404

SYM	ZONE	DESCRIPTION	DATE	APPROVAL
		REVISIONS		

RS+H IMPROVING YOUR WORLD
Reynolds, Smith and Hills, Inc.
115 Alma Blvd, Suite 101
Merritt Island, Florida 32953-4101
(321) 453-0212 (321) 453-0223 FAX
www.rsandh.com

SIGNATURES	DATE
DRAWN: JOE D'AMICO	08/20/2013
CHECKED: DAVID KELLER	08/20/2013
SUBMITTED: AEOR/ENG OF RECORD ROBERT PRUSS	8/20/2013
ST OF LICENSURE: FL LICENSE NO: 73550	
APPROVED: STEVE MOORE	8.20.13
MIKE HARTNETT	8/5/13

NATIONAL AERONAUTICS AND SPACE ADMINISTRATION
JOHN F. KENNEDY SPACE CENTER, NASA
KENNEDY SPACE CENTER, FLORIDA

LAUNCH COMPLEX 39
VEHICLE ASSEMBLY BUILDING

MODIFY VEHICLE ASSEMBLY BUILDING HIGH BAY 3 FOR SLS ELEVATOR PLATFORM LIFTING LUG ASSEMBLY DETAILS - 2

FILE NO.	SIZE	DWG. NO.	REV
302-6058-043	E	79K39665	

PROJ. NO. PCN 99000.5 SHEET 25 OF

NOTICE – WHEN GOVERNMENT DRAWINGS, SPECIFICATIONS, OR OTHER DATA ARE USED FOR ANY PURPOSE OTHER THAN IN CONNECTION WITH A DEFINITELY RELATED GOVERNMENT PROCUREMENT OPERATION, THE UNITED STATES GOVERNMENT THEREBY INCURS NO RESPONSIBILITY NOR ANY OBLIGATION WHATSOEVER; AND THE FACT THAT THE GOVERNMENT MAY HAVE FORMULATED, FURNISHED, OR IN ANY WAY SUPPLIED THE SAID DRAWINGS, SPECIFICATIONS OR ANY OTHER DATA IS NOT TO BE REGARDED BY IMPLICATION OR OTHERWISE IN ANY MANNER LICENSING THE HOLDER OR ANY OTHER PERSONS OR CORPORATION, OR CONVEYING ANY RIGHTS OR PERMISSION TO MANUFACTURE, USE, OR SELL ANY PATENTED INVENTION THAT IN ANY WAY BE RELATED THERETO.

ABBREVIATIONS

AFF	ABOVE FINISHED FLOOR
AFG	ABOVE FINISHED GRADE
AIC	AMPERAGE INTERRUPTING CAPACITIES
C, COND	CONDUIT
CFP	CUSTOMER FACE PLATE
CID1	CLASS I, DIVISION 1
CID2	CLASS I, DIVISION 2
CB	CIRCUIT BREAKER
CKT	CIRCUIT
CORR	CORRIDOR
DR	DROP RESISTANT
ELEV	ELEVATOR
EST	ESTIMATED
FL	FLOOR
GEN	GENERAL
GFCI	GROUND FAULT CIRCUIT INTERRUPTER
GND	GROUND
HOA	HAND–OFF–AUTOMATIC
HOR	HAND–OFF–REMOTE
HVAC	HEATING, VENTILATING AND AIR CONDITIONING
IAW	IN ACCORDANCE WITH
KVA	KILO–VOLT AMPERE
LED	LIGHT EMITTING DIODE
LC	LIGHTING CONTACTOR
LCC	LAUNCH CONTROL CENTER
LP	LIGHTING PANEL
LGTS	LIGHTS
LTG	LIGHTING
LVL	LEVEL
MCB	MAIN CIRCUIT BREAKER
MCC	MOTOR CONTROL CENTER
MDP	MAIN DISTRIBUTION PANEL
MIC	MICROPHONE
MLO	MAIN LUG ONLY
NIC	NOT IN CONTRACT
PLAT	PLATFORM
RCP	RECEPTACLE PANEL
RECPT	RECEPTACLE
RGS	RIGID GALVANIZED STEEL
RM	ROOM
SOOW	SERVICE CORD, OIL RESISTANT OUTSIDE JACKET AND INSIDE INSULATION, WEATHER/WATER RESISTANT
SP	SYSTEMS PANEL
SPD	SURGE PROTECTION DEVICE
SS	STAINLESS STEEL
TC	TRAY CABLE
TOG	TOP OF GRATING
TOS	TOP OF STEEL
TWR	TOWER
UL	UNDERWRITERS LABORATORIES
W/H	WITH HARDWARE

SYMBOLS LEGEND

- DUPLEX RECEPTACLE, 120V, 20A, NEMA 5–20R
- Ø 20 — LOCKING RECEPTACLE, 120V, 20A, 2POLE, 3W, NEMA L5–20R
- L7–15 — SPECIAL PURPOSE RECEPTACLE, TYPE AS INDICATED
- x — LINEAR FLUORESCENT LIGHTING (X = FIXTURE TYPE, REFERENCE LIGHTING DETAILS)
- OS — CEILING OCCUPANCY SENSOR
- PARABOLIC LINEAR FLUORESCENT LIGHTING, EXISTING
- SPOT FLOOD LIGHTING, EXISTING
- FLEXIBLE CORD PLUG CONNECTION
- OS — WALL MOUNTED OCCUPANCY SENSOR
- HEAVY DUTY DISCONNECT SWITCH
- HEAVY DUTY FUSED DISCONNECT SWITCH
- J OR J — JUNCTION BOX

LINE TYPE LEGEND

- ——————— EXPOSED, POWER CIRCUITING
- LOW VOLTAGE (12V) POWER CIRCUITING

CIRCUITING LEGEND

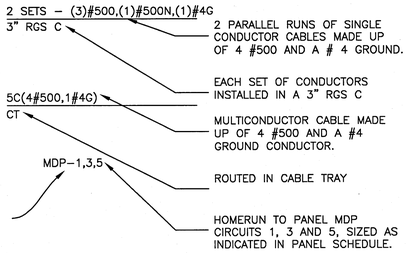

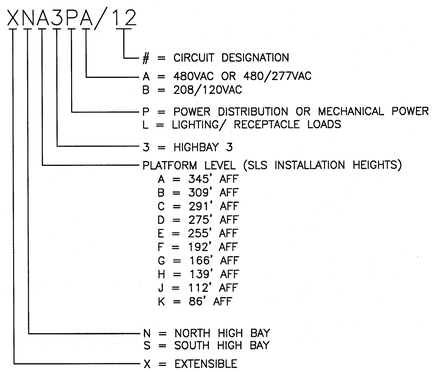

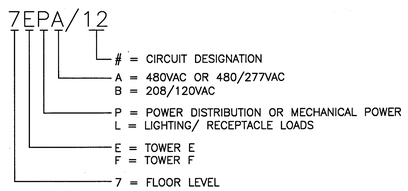

GENERAL NOTES

1. ALL ELECTRICAL PANELS, SWITCHBOARDS, SWITCHGEAR, AND OTHER ENCLOSURES OF ELECTRICAL EQUIPMENT, REQUIRING ACCESS FOR MAINTENANCE, TESTING, AND/OR TROUBLESHOOTING, SHALL BE LABELED WITH ARC FLASH WARNING LABELS. ARC FLASH CALCULATIONS SHALL BE PERFORMED FOR EACH OF THE ITEMS LISTED ABOVE. ARC FLASH LABELING SHALL IDENTIFY PROPER PPE AND CLEARANCES REQUIRED AND BE AFFIXED TO THE EQUIPMENT IAW THE LATEST EDITION OF NFPA 70E.
2. CONSTRUCTION OF THE ELECTRICAL SYSTEMS SHALL BE PERFORMED IAW WITH ALL LOCAL AND NATIONAL CODES, INCLUDING THE LATEST EDITIONS OF, BUT NOT LIMITED TO NFPA 70, NFPA 70E, NFPA 780 AND NFPA 497.
3. ALL ELECTRICAL DISCONNECTS, BREAKERS, OR ANY OTHER MEANS OF ISOLATING POWER SOURCES FROM THEIR LOADS, SHALL BE CAPABLE OF BEING LOCKED WITH A PAD LOCK. ITEMS SUCH AS BREAKER HANDLES UNABLE TO BE LOCKED DIRECTLY SHALL BE MANUFACTURED AND INSTALLED IN A MANNER IN WHICH AN OSHA APPROVED LOCKOUT/TAGOUT LOCKING MECHANISM IN CONJUNCTION WITH A PADLOCK WILL RENDER THEM INOPERATIVE.
4. POWER DISTRIBUTION EQUIPMENT LOCATION AND SCHEDULING ARE BASED ON ELECTRICAL AS–BUILT DRAWINGS 39K6150009 (LAUNCH COMPLEX 39 VAB TOWER E SECONDARY VOLTAGE POWER DISTRIBUTION SYSTEM) AND 39K6150010 (LAUNCH COMPLEX 39 SECONDARY VOLTAGE POWER DISTRIBUTION SYSTEM VAB – TOWER F).

GENERAL DEMOLITION NOTES

1. THE DEMOLITION PLAN IS INTENDED TO SHOW THE GENERAL SCOPE OF WORK AND DOES NOT SHOW EVERY DEVICE, BOX, CONDUIT, PANEL, ETC. TO BE REMOVED. FIELD VERIFY OTHER ELECTRICAL SERVICE THAT MAY BE ENCOUNTERED DURING DEMOLITION AND REMOVE THESE ITEMS AS REQUIRED.
2. REMOVE EXISTING LIGHTING FIXTURES, LIGHTING CONTROLS, POWER RECEPTACLES AND CONTROLS AS INDICATED ON ELECTRICAL DEMOLITION DRAWINGS. REMOVE ASSOCIATED BRANCH CIRCUITS AND CONDUITS BACK TO THE POINT OF ORIGIN.
3. QUANTITIES AND LOCATIONS OF EQUIPMENT AND DEVICES SHOWN ARE BASED ON AS–BUILT DRAWINGS DATED JANUARY 1967 AND INFORMATION GATHERED DURING SITE VISITS. CONTRACTOR TO FIELD VERIFY.
4. COORDINATE ELECTRICAL DEMOLITION WORK WITH MECHANICAL, STRUCTURAL AND ARCHITECTURAL.

SYM	ZONE	DESCRIPTION	DATE	APPROVAL
		REVISIONS		

WHEN PRINTED FULL SIZE, THIS SHEET IS 34"X44"
THIS COMPUTER DRAWING WAS CREATED IN AUTOCAD AND FILED UNDER THE DRAWING NUMBER

E–001

SIGNATURES	DATE
DRAWN: JOSEPH HAUER	08-20-2013
CHECKED: DANIEL VICEANT	08-20-2013
SUBMITTED: ARCHIVING OF RECORD KEVIN HARRIS	08-20-2013
ST OF LICENSURE: FL LICENSE NO: 68533	
APPROVED: JOHN KERCSMAR for	8.20.13
MIKE HARTNETT	11/5/13

Reynolds, Smith and Hills, Inc.
115 Alma Blvd, Suite 101
Merritt Island, Florida 32953-4101
(321) 453-0212 (321) 453-0223 FAX
www.rsandh.com

NATIONAL AERONAUTICS AND SPACE ADMINISTRATION
JOHN F. KENNEDY SPACE CENTER, NASA
KENNEDY SPACE CENTER, FLORIDA

LAUNCH COMPLEX 39
VEHICLE ASSEMBLY BUILDING

MODIFY VEHICLE ASSEMBLY BUILDING HIGH BAY 3 FOR SLS – ELEVATOR LANDINGS ELECTRICAL GENERAL NOTES, LEGEND AND ABBREVIATIONS

FILE NO.	SIZE	DWG. NO.	REV
302-6058-043	E	79K39665	

PROJ. NO. PCN 99000.5 SHEET 26 OF

NOTICE – WHEN GOVERNMENT DRAWINGS, SPECIFICATIONS, OR OTHER DATA ARE USED FOR ANY PURPOSE OTHER THAN IN CONNECTION WITH A DEFINITELY RELATED GOVERNMENT PROCUREMENT OPERATION, THE UNITED STATES GOVERNMENT THEREBY INCURS NO RESPONSIBILITY NOR ANY OBLIGATION WHATSOEVER; AND THE FACT THAT THE GOVERNMENT MAY HAVE FORMULATED, FURNISHED, OR IN ANY WAY SUPPLIED THE SAID DRAWINGS, SPECIFICATIONS OR ANY OTHER DATA IS NOT TO BE REGARDED BY IMPLICATION OR OTHERWISE IN ANY MANNER LICENSING THE HOLDER OR ANY OTHER PERSONS OR CORPORATION, OR CONVEYING ANY RIGHTS OR PERMISSION TO MANUFACTURE, USE, OR SELL ANY PATENTED INVENTION THAT IN ANY WAY BE RELATED THERETO.

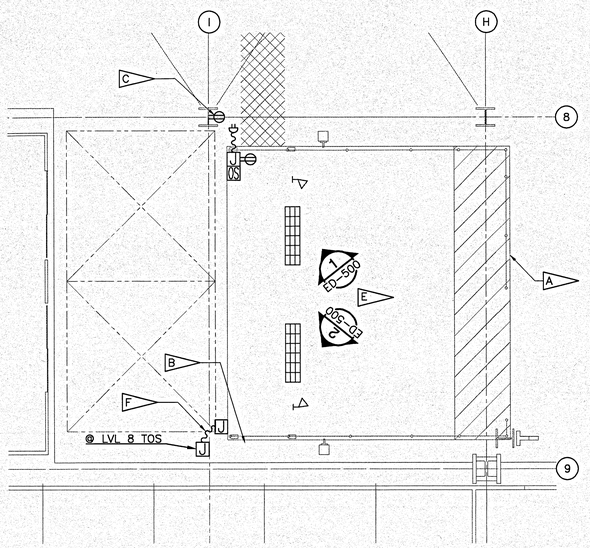

DEMOLITION PLAN - ELEVATOR LANDING - LEVEL 7 - TOWER E
SCALE: 1/4" = 1'-0"

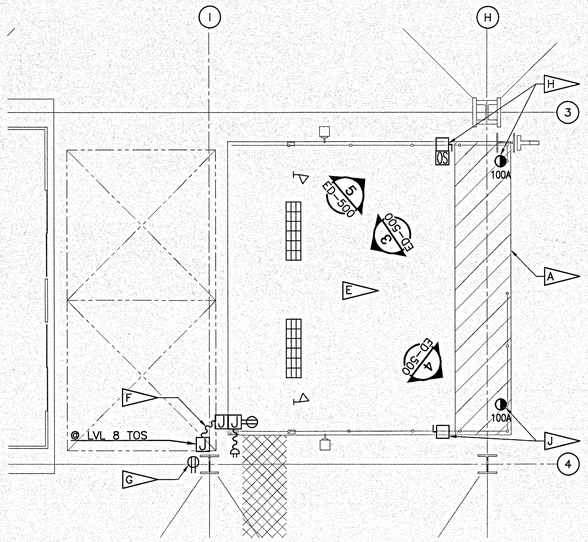

DEMOLITION PLAN - ELEVATOR LANDING - LEVEL 7 - TOWER F
SCALE: 1/4" = 1'-0"

SPECIFIC NOTES:

A. EXISTING AREA OF PLATFORM TO BE REMOVED.

B. REMOVE ABANDONED LOW VOLTAGE CABLING WOUND AROUND COLUMN BACK TO CABLE TRAY LOCATED ON LEVEL 8 OF TOWER E.

C. REMOVE EXISTING RECEPTACLE, ASSOCIATED RACEWAY AND CABLING SUPPLIED FROM PANEL 7ELB CIRCUIT 2 BACK TO NEAREST JUNCTION BOX LOCATED WITHIN TOWER E.

D. TYPICAL, EXISTING PLATFORMS THIS SHEET HAVE OCCUPANCY SENSORS THAT ARE SUPPLIED FROM POWER PACK WATTSTOPPER #B120E-P CONNECTED AT CONVENIENCE RECEPTACLE ON PLATFORM. LOW VOLTAGE CABLING EXTENDS FROM POWER PACK TO OCCUPANCY SENSORS, CABLE TIED TO HANDRAILS, CONDUITS AND/OR STRUCTURAL MEMBERS.

E. CONTRACTOR TO REMOVE FROM THIS PLATFORM ALL EXISTING LIGHTING, LIGHTING CONTROLS, CONVENIENCE RECEPTACLES AND THEIR ASSOCIATED RACEWAYS, JUNCTION BOXES, CORD PLUG CONNECTIONS AND CABLING IN THEIR ENTIRETY.

F. CONTRACTOR TO DISCONNECT ELEVATOR CONTROL CABLING ROUTING TO ELEVATOR PLATFORM FROM FACILITY SIDE ELEVATOR CONTROL JUNCTION BOX.

G. REMOVE EXISTING RECEPTACLE, ASSOCIATED RACEWAY AND CABLING SUPPLIED FROM PANEL 7FLB BACK TO NEAREST JUNCTION BOX LOCATED WITHIN TOWER F.

H. REMOVE EXISTING 480VAC, 100AMP DISCONNECT AND ASSOCIATED RECEPTACLE FROM ELEVATOR PLATFORM INCLUDING ALL ASSOCIATED RACEWAY AND CABLING BACK TO SOURCE PANEL 7FPA CIRCUIT 10.

J. REMOVE EXISTING 480VAC, 100AMP DISCONNECT AND ASSOCIATED RECEPTACLE FROM ELEVATOR PLATFORM INCLUDING ALL ASSOCIATED RACEWAY AND CABLING BACK TO SOURCE PANEL 7FPA CIRCUIT 3.

K. REMOVE EXISTING RECEPTACLES (3 INSTALLED AT APPROXIMATELY 10'-0" INTERVALS), ASSOCIATED RACEWAY AND CABLING SUPPLIED FROM PANEL 10ELB CIRCUIT 4 BACK TO NEAREST JUNCTION BOX LOCATED WITHIN TOWER E.

L. REMOVE APPROXIMATELY 5'-0" OF 18" WIDE VERTICAL CABLE TRAY, (2) 90 DEG ELBOWS, 18" OF HORIZONTAL CABLE TRAY AND FIRST TRAY SUPPORT FROM TRAY END.

M. REMOVE EXISTING RECEPTACLES (3 INSTALLED AT APPROXIMATELY 10'-0" INTERVALS), ASSOCIATED RACEWAY AND CABLING SUPPLIED FROM PANEL 10FLB CIRCUIT 4 BACK TO NEAREST JUNCTION BOX LOCATED WITHIN TOWER F.

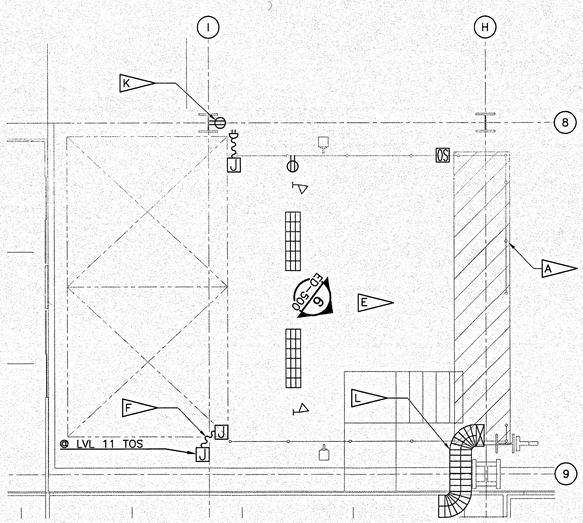

DEMOLITION PLAN - ELEVATOR LANDING - LEVEL 11 - TOWER E
SCALE: 1/4" = 1'-0"

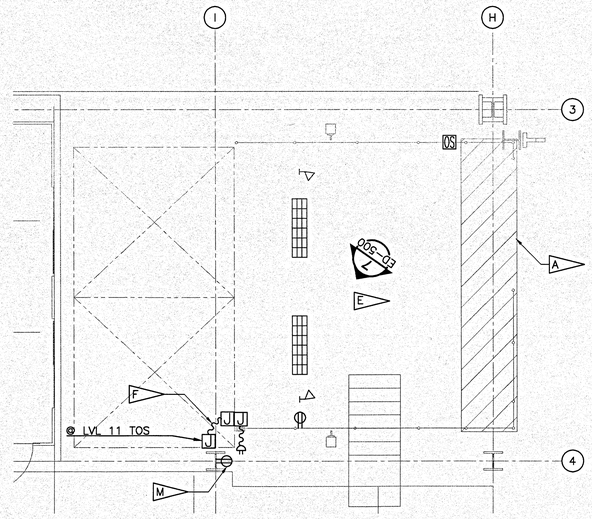

DEMOLITION PLAN - ELEVATOR LANDING - LEVEL 11 - TOWER F
SCALE: 1/4" = 1'-0"

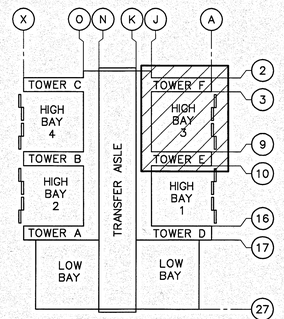

VAB KEY PLAN
SCALE: NTS

1/4 IN = 1 FT

WHEN PRINTED FULL SIZE, THIS SHEET IS 34"X44"
THIS COMPUTER DRAWING WAS CREATED IN AUTOCAD AND FILED UNDER THE DRAWING NUMBER

ED-100

SYM	ZONE	DESCRIPTION	DATE	APPROVAL
REVISIONS				

RS&H IMPROVING YOUR WORLD

Reynolds, Smith and Hills, Inc.
115 Alma Blvd, Suite 101
Merritt Island, Florida 32953-4101
(321) 453-0212 (321) 453-0223 FAX
www.rsandh.com

SIGNATURES	DATE
DRAWN: JOSEPH HAUER	08-20-2013
CHECKED: DANIEL VIGEANT	08-20-2013
SUBMITTED: ARCHENG OF RECORD KEVIN HARRIS	08-20-2013
ST OF LICENSURE: FL LICENSE NO: 69533	
APPROVED: for JOHN KERCSMAR	8.20.13
MIKE HARTNETT	11/5/13

NATIONAL AERONAUTICS AND SPACE ADMINISTRATION
JOHN F. KENNEDY SPACE CENTER, NASA
KENNEDY SPACE CENTER, FLORIDA

LAUNCH COMPLEX 39
VEHICLE ASSEMBLY BUILDING

MODIFY VEHICLE ASSEMBLY BUILDING HIGH BAY 3 FOR SLS – ELEVATOR LANDINGS ELEVATOR LANDINGS – ELECTRICAL DEMOLITION PLANS

FILE NO. 302-6058-043 | SIZE E | DWG. NO. 79K39665 | REV
PROJ. NO. PCN 99000.5 | SHEET 27 OF

Light

NOTICE – WHEN GOVERNMENT DRAWINGS, SPECIFICATIONS, OR OTHER DATA ARE USED FOR ANY PURPOSE OTHER THAN IN CONNECTION WITH A DEFINITELY RELATED GOVERNMENT PROCUREMENT OPERATION, THE UNITED STATES GOVERNMENT THEREBY INCURS NO RESPONSIBILITY NOR ANY OBLIGATION WHATSOEVER; AND THE FACT THAT THE GOVERNMENT MAY HAVE FORMULATED, FURNISHED, OR IN ANY WAY SUPPLIED THE SAID DRAWINGS, SPECIFICATIONS, OR OTHER DATA IS NOT TO BE REGARDED BY IMPLICATION OR OTHERWISE AS IN ANY MANNER LICENSING THE HOLDER OR ANY OTHER PERSON OR CORPORATION, OR CONVEYING ANY RIGHTS OR PERMISSION TO MANUFACTURE, USE, OR SELL ANY PATENTED INVENTION THAT IN ANY WAY BE RELATED THERETO.

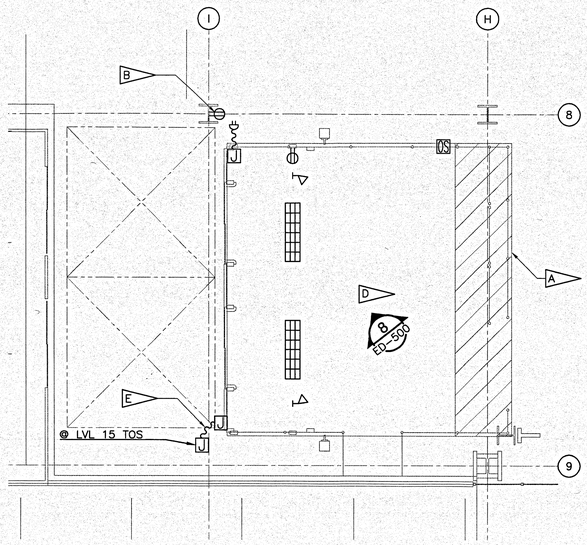

DEMOLITION PLAN - ELEVATOR LANDING - LEVEL 14 - TOWER E
SCALE: 1/4" = 1'-0"

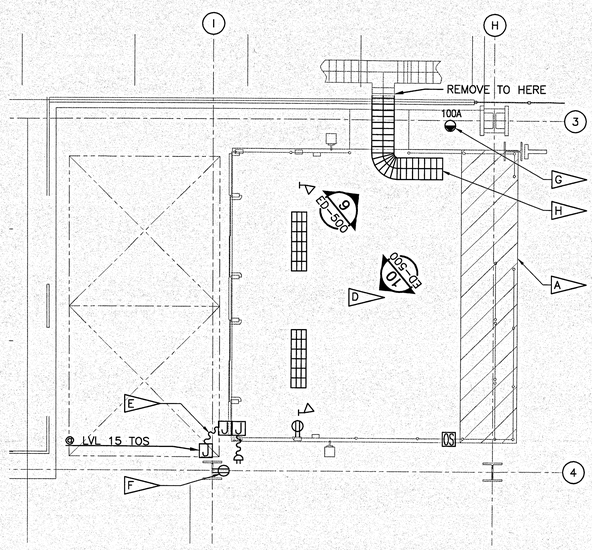

DEMOLITION PLAN - ELEVATOR LANDING - LEVEL 14 - TOWER F
SCALE: 1/4" = 1'-0"

SPECIFIC NOTES:

A. EXISTING AREA OF PLATFORM TO BE REMOVED.

B. REMOVE EXISTING RECEPTACLES (3 INSTALLED AT APPROXIMATELY 10'-0" INTERVALS), ASSOCIATED RACEWAY AND CABLING SUPPLIED FROM PANEL 14ELB CIRCUIT 23 BACK TO NEAREST JUNCTION BOX LOCATED WITHIN TOWER E.

C. TYPICAL, EXISTING PLATFORMS THIS SHEET HAVE OCCUPANCY SENSORS THAT ARE SUPPLIED FROM POWER PACK WATTSTOPPER #B120E-P CONNECTED AT CONVENIENCE RECEPTACLE ON PLATFORM. LOW VOLTAGE CABLING EXTENDS FROM POWER PACK TO OCCUPANCY SENSORS, CABLE TIED TO HANDRAILS, CONDUITS AND/OR STRUCTURAL MEMBERS.

D. CONTRACTOR TO REMOVE FROM THIS PLATFORM ALL EXISTING LIGHTING, LIGHTING CONTROLS, CONVENIENCE RECEPTACLES AND THEIR ASSOCIATED RACEWAYS, JUNCTION BOXES, CORD PLUG CONNECTIONS AND CABLING IN THEIR ENTIRETY.

E. CONTRACTOR TO DISCONNECT ELEVATOR CONTROL CABLING ROUTING TO ELEVATOR PLATFORM FROM FACILITY SIDE ELEVATOR CONTROL JUNCTION BOX.

F. REMOVE EXISTING RECEPTACLES (2 INSTALLED AT APPROXIMATELY 10'-0" INTERVALS), ASSOCIATED RACEWAY AND CABLING SUPPLIED FROM PANEL 14FLB CIRCUIT 6 BACK TO NEAREST JUNCTION BOX LOCATED WITHIN TOWER F.

G. EXISTING 480VAC, 100AMP RECEPTACLE SUPPLIED FROM PANEL 14FPA CIRCUIT MOUNTED TO BACK-SIDE OF ELEVATOR PLATFORM SUPPORT COLUMN (TO REMAIN).

H. REMOVE 18" WIDE CABLE TRAY BACK TO EXISTING 'TEE' FITTING AS SHOWN. REMOVE EXISTING STANCHION TRAY SUPPORT LOCATED ON PLATFORM D.

J. REMOVE EXISTING RECEPTACLES (3 INSTALLED AT APPROXIMATELY 10'-0" INTERVALS), ASSOCIATED RACEWAY AND CABLING SUPPLIED FROM PANEL 20ELB CIRCUIT 15 BACK TO NEAREST JUNCTION BOX LOCATED WITHIN TOWER E.

K. REMOVE EXISTING RECEPTACLES (3 INSTALLED AT APPROXIMATELY 10'-0" INTERVALS), ASSOCIATED RACEWAY AND CABLING SUPPLIED FROM PANEL 20FLB BACK TO NEAREST JUNCTION BOX LOCATED WITHIN TOWER F.

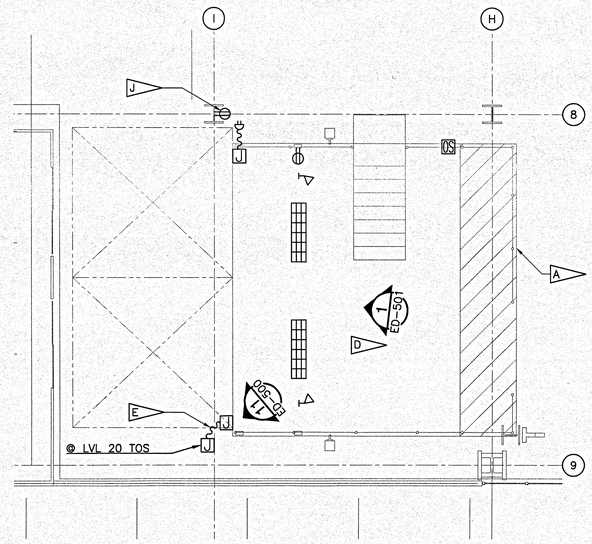

DEMOLITION PLAN - ELEVATOR LANDING - LEVEL 19 - TOWER E
SCALE: 1/4" = 1'-0"

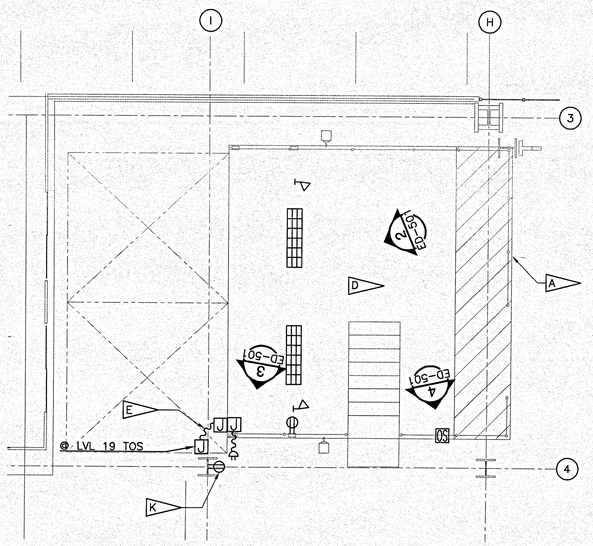

DEMOLITION PLAN - ELEVATOR LANDING - LEVEL 19 - TOWER F
SCALE: 1/4" = 1'-0"

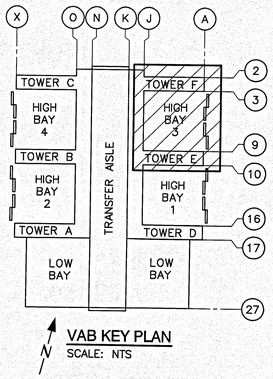

VAB KEY PLAN
SCALE: NTS

2 1 0 2 4 6 8 10
1/4 IN = 1 FT

WHEN PRINTED FULL SIZE, THIS SHEET IS 34"X44"
THIS COMPUTER DRAWING WAS CREATED IN AUTOCAD AND FILED UNDER THE DRAWING NUMBER ED-101

SYM	ZONE	DESCRIPTION	DATE	APPROVAL

REVISIONS

RS&H IMPROVING YOUR WORLD

Reynolds, Smith and Hills, Inc.
115 Alma Blvd, Suite 101
Merritt Island, Florida 32953-4101
(321) 453-0212 (321) 453-0223 FAX
www.rsandh.com

SIGNATURES		DATE
DRAWN:	JOSEPH HAUER	08-20-2013
CHECKED:	DANIEL VIGEANT	08-20-2013
SUBMITTED: ARCHENG OF RECORD	KEVIN HARRIS	08-20-2013
ST OF LICENSURE: FL		
LICENSE NO: 68533		
APPROVED:	JOHN KERCSMAR	8.20.13
	MIKE HARTNETT	11/5/13

NATIONAL AERONAUTICS AND SPACE ADMINISTRATION
JOHN F. KENNEDY SPACE CENTER, NASA
KENNEDY SPACE CENTER, FLORIDA

LAUNCH COMPLEX 39
VEHICLE ASSEMBLY BUILDING

MODIFY VEHICLE ASSEMBLY BUILDING HIGH BAY 3 FOR SLS – ELEVATOR LANDINGS
ELEVATOR LANDINGS – ELECTRICAL DEMOLITION PLANS

FILE NO.	SIZE	DWG. NO.	REV
302-6058-043	E	79K39665	

PROJ. NO. PCN 99000.5 SHEET 28 OF

Light

NOTICE – WHEN GOVERNMENT DRAWINGS, SPECIFICATIONS, OR OTHER DATA ARE USED FOR ANY PURPOSE OTHER THAN IN CONNECTION WITH A DEFINITELY RELATED GOVERNMENT PROCUREMENT OPERATION, THE UNITED STATES GOVERNMENT THEREBY INCURS NO RESPONSIBILITY NOR ANY OBLIGATION WHATSOEVER; AND THE FACT THAT THE GOVERNMENT MAY HAVE FORMULATED, FURNISHED, OR IN ANY WAY SUPPLIED THE SAID DRAWINGS, SPECIFICATIONS OR ANY OTHER DATA IS NOT TO BE REGARDED BY IMPLICATION OR OTHERWISE AS IN ANY MANNER LICENSING THE HOLDER OR ANY OTHER PERSON OR CORPORATION, OR CONVEYING ANY RIGHTS OR PERMISSION TO MANUFACTURE, USE, OR SELL ANY PATENTED INVENTION THAT IN ANY WAY BE RELATED THERETO.

SPECIFIC NOTES:

A. EXISTING AREA OF PLATFORM TO BE REMOVED.

B. EXISTING PLATFORM THIS SHEET HAS AN OCCUPANCY SENSOR THAT IS SUPPLIED FROM POWER PACK WATTSTOPPER #B120E–P CONNECTED AT JUNCTION BOX NEAR ELEVATOR FRONT LOBBY. LOW VOLTAGE CABLING EXTENDS FROM POWER PACK TO OCCUPANCY SENSOR, CABLE TIED TO HANDRAILS, CONDUITS AND/OR STRUCTURAL MEMBERS.

C. CONTRACTOR TO REMOVE FROM THIS PLATFORM ALL EXISTING LIGHTING, LIGHTING CONTROLS, AND THEIR ASSOCIATED RACEWAYS, JUNCTION BOXES AND CABLING IN THEIR ENTIRETY.

D. CONTRACTOR TO DISCONNECT ELEVATOR CONTROL CABLING ROUTING TO ELEVATOR PLATFORM FROM HARD–PIPED CONNECTION TO ELEVATOR FRONT LOBBY WIREWAY.

E. CIRCUITING EXTEND TO EXISTING COMMUNICATIONS PLATFORM LOCATED ON LEVEL 10, TOWER E. REMOVE CONDUIT AND CABLING TO NEAREST JUNCTION BEYOND ELEVATOR PLATFORM.

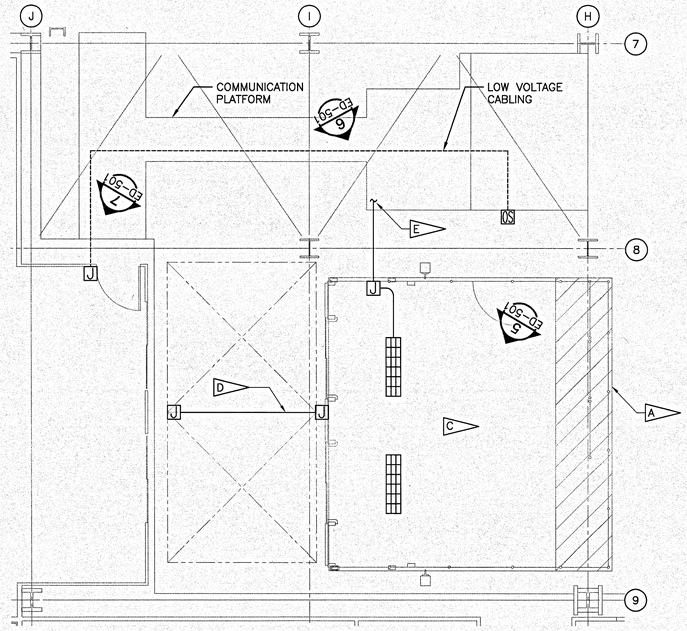

DEMOLITION PLAN - ELEVATOR LANDING - LEVEL 10 - TOWER E
SCALE: 1/4" = 1'–0"

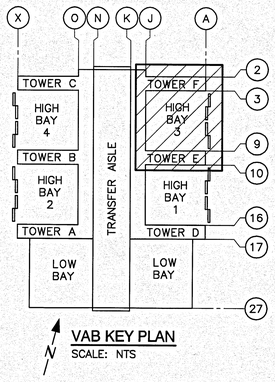

VAB KEY PLAN
SCALE: NTS

2 1 0 2 4 6 8 10
1/4 IN = 1 FT

WHEN PRINTED FULL SIZE, THIS SHEET IS 34"X44"
THIS COMPUTER DRAWING WAS CREATED IN AUTOCAD AND FILED UNDER THE DRAWING NUMBER

ED–102

SYM	ZONE	DESCRIPTION	DATE	APPROVAL
		REVISIONS		

RS&H IMPROVING YOUR WORLD
Reynolds, Smith and Hills, Inc.
115 Alma Blvd, Suite 101
Merritt Island, Florida 32953-4101
(321) 453-0212 (321) 453-0223 FAX
www.rsandh.com

SIGNATURES		DATE
DRAWN:	JOSEPH HAUER	08-20-2013
CHECKED:	DANIEL VICENT	08-20-2013
SUBMITTED: ARCHIENG OF RECORD	KEVIN HARRIS	08-20-2013
ST OF LICENSURE: FL	LICENSE NO: 68533	
APPROVED:	JOHN KERCSMAR	8.20.13
	MIKE HARTNETT	11/5/13

NATIONAL AERONAUTICS AND SPACE ADMINISTRATION
JOHN F. KENNEDY SPACE CENTER, NASA
KENNEDY SPACE CENTER, FLORIDA

LAUNCH COMPLEX 39
VEHICLE ASSEMBLY BUILDING
MODIFY VEHICLE ASSEMBLY BUILDING HIGH BAY 3 FOR SLS – ELEVATOR LANDINGS
ELEVATOR LANDINGS –
ELECTRICAL DEMOLITION PLANS

FILE NO.	SIZE	DWG. NO.	REV
302-6058-043	E	79K39665	

PROJ. NO. PCN 99000.5 SHEET 29 OF

Light

NOTICE -- WHEN GOVERNMENT DRAWINGS, SPECIFICATIONS, OR OTHER DATA ARE USED FOR ANY PURPOSE OTHER THAN IN CONNECTION WITH A DEFINITELY RELATED GOVERNMENT PROCUREMENT OPERATION, THE UNITED STATES GOVERNMENT THEREBY INCURS NO RESPONSIBILITY NOR ANY OBLIGATION WHATSOEVER; AND THE FACT THAT THE GOVERNMENT MAY HAVE FORMULATED, FURNISHED, OR IN ANY WAY SUPPLIED THE SAID DRAWINGS, SPECIFICATIONS, OR OTHER DATA IS NOT TO BE REGARDED BY IMPLICATION OR OTHERWISE IN ANY MANNER LICENSING THE HOLDER OR ANY OTHER PERSONS OR CORPORATION, OR CONVEYING ANY RIGHTS OR PERMISSION TO MANUFACTURE, USE, OR SELL ANY PATENTED INVENTION THAT IS ANY WAY BE RELATED THERETO.

PLATFORM D TOWER E (1)
SCALE: NTS ED-100 | ED-500

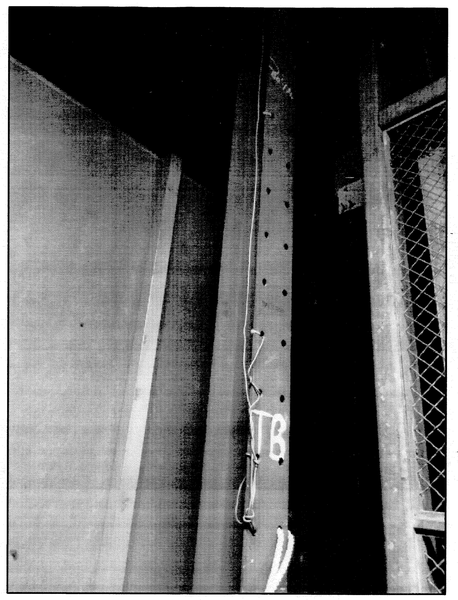

PLATFORM D TOWER E (2)
SCALE: NTS ED-100 | ED-500

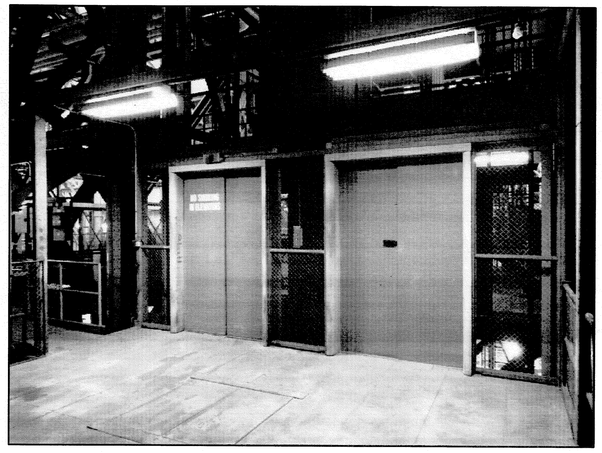

PLATFORM D TOWER F (3)
SCALE: NTS ED-100 | ED-500

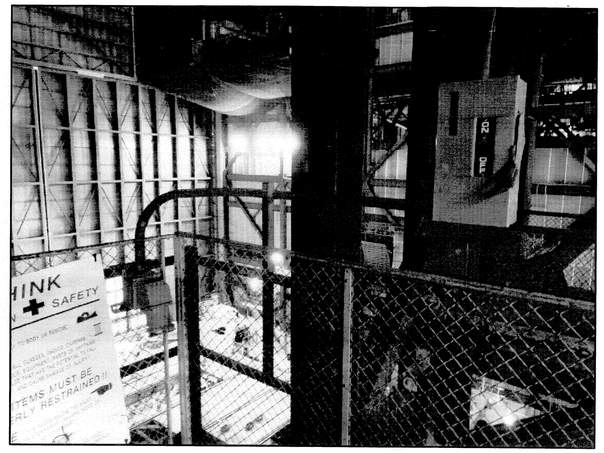

PLATFORM D TOWER F (4)
SCALE: NTS ED-100 | ED-500

PLATFORM D TOWER F (5)
SCALE: NTS ED-100 | ED-500

PLATFORM B TOWER E (6)
SCALE: NTS ED-100 | ED-500

PLATFORM B TOWER F (7)
SCALE: NTS ED-100 | ED-500

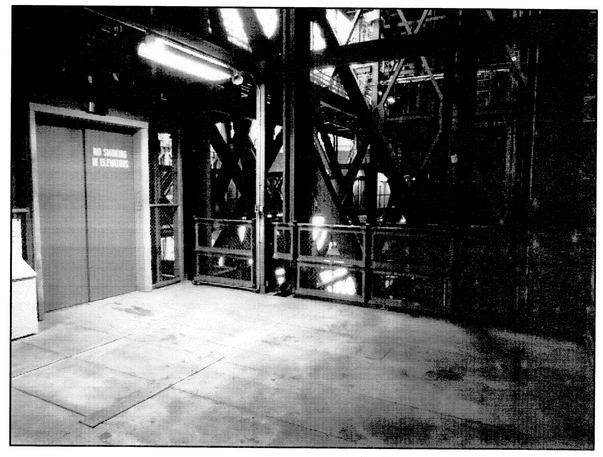

PLATFORM E TOWER E (8)
SCALE: NTS ED-101 | ED-500

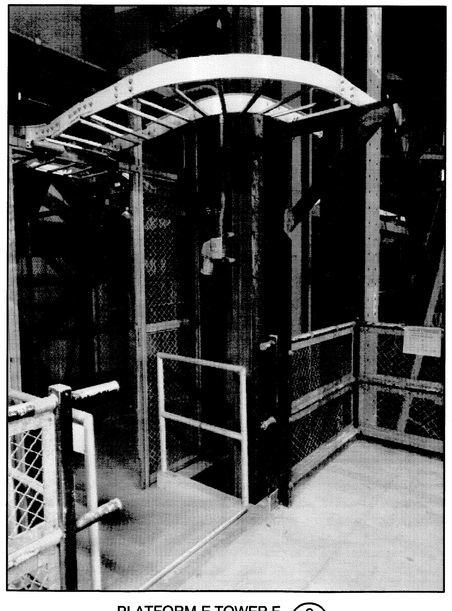

PLATFORM E TOWER F (9)
SCALE: NTS ED-101 | ED-500

PLATFORM E TOWER F (10)
SCALE: NTS ED-101 | ED-500

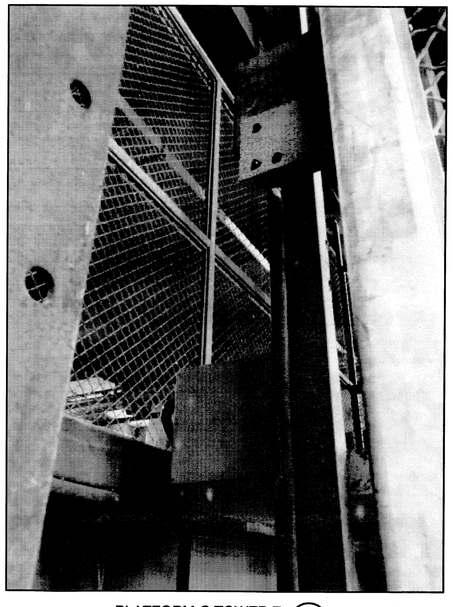

PLATFORM C TOWER E (11)
SCALE: NTS ED-101 | ED-500

WHEN PRINTED FULL SIZE, THIS SHEET IS 34"X44"
THIS COMPUTER DRAWING WAS CREATED IN AUTOCAD AND FILED UNDER THE DRAWING NUMBER

ED-500

SYM	ZONE	DESCRIPTION	DATE	APPROVAL
		REVISIONS		

RS&H IMPROVING YOUR WORLD
Reynolds, Smith and Hills, Inc.
115 Alma Blvd, Suite 101
Merritt Island, Florida 32953-4101
(321) 453-0212 (321) 453-0223 FAX
www.rsandh.com

SIGNATURES		DATE
DRAWN:	JOSEPH HAUER	08-20-2013
CHECKED:	DANIEL VICEANT	08-20-2013
SUBMITTED: ARCHIVING OF RECORD	KEVIN HARRIS	08-20-2013
ST OF LICENSURE: FL LICENSE NO: 68533		
APPROVED:	JOHN KERCSMAR	8.20.13
	MIKE HARTNETT	11/5/13

NATIONAL AERONAUTICS AND SPACE ADMINISTRATION
JOHN F. KENNEDY SPACE CENTER, NASA
KENNEDY SPACE CENTER, FLORIDA

LAUNCH COMPLEX 39
VEHICLE ASSEMBLY BUILDING

MODIFY VEHICLE ASSEMBLY BUILDING HIGH BAY 3 FOR SLS – ELEVATOR LANDINGS ELECTRICAL DEMOLITION ELEVATOR PLATFORM – DETAILS 1

FILE NO. 302-6058-043 | SIZE E | DWG. NO. 79K39665 | REV
PROJ. NO. PCN 99000.5 | SHEET 30 OF

NOTICE -- WHEN GOVERNMENT DRAWINGS, SPECIFICATIONS, OR OTHER DATA ARE USED FOR ANY PURPOSE OTHER THAN IN CONNECTION WITH A DEFINITELY RELATED GOVERNMENT PROCUREMENT OPERATION, THE UNITED STATES GOVERNMENT INCURS NO RESPONSIBILITY NOR ANY OBLIGATION WHATSOEVER; AND THE FACT THAT THE GOVERNMENT MAY HAVE FORMULATED, FURNISHED, OR IN ANY WAY SUPPLIED THE SAID DRAWINGS, SPECIFICATIONS OR ANY OTHER DATA IS NOT TO BE REGARDED BY IMPLICATION OR OTHERWISE IN ANY MANNER LICENSING THE HOLDER OR ANY OTHER PERSONS OR CORPORATION, OR CONVEYING ANY RIGHTS OR PERMISSION TO MANUFACTURE, USE, OR SELL ANY PATENTED INVENTION THAT IN ANY WAY BE RELATED THERETO.

PLATFORM C TOWER E (1)
SCALE: NTS ED-101 | ED-501

PLATFORM C TOWER F (2)
SCALE: NTS ED-101 | ED-501

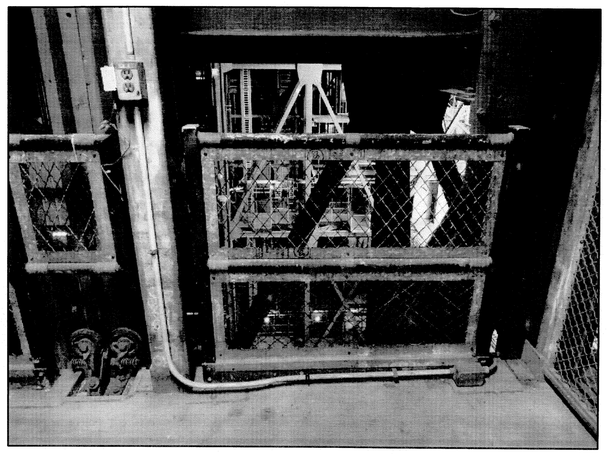

PLATFORM C TOWER F (3)
SCALE: NTS ED-101 | ED-501

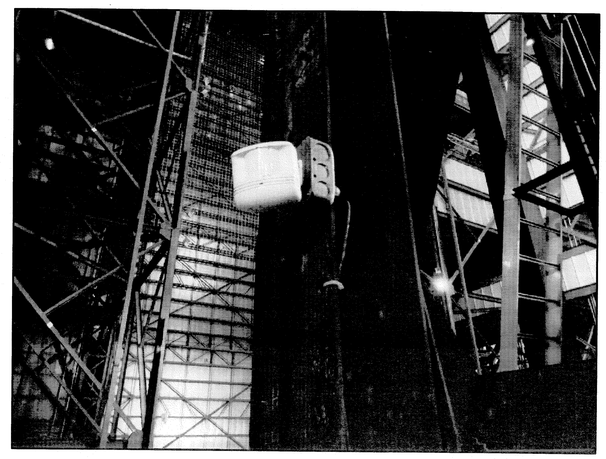

PLATFORM C TOWER F (4)
SCALE: NTS ED-101 | ED-501

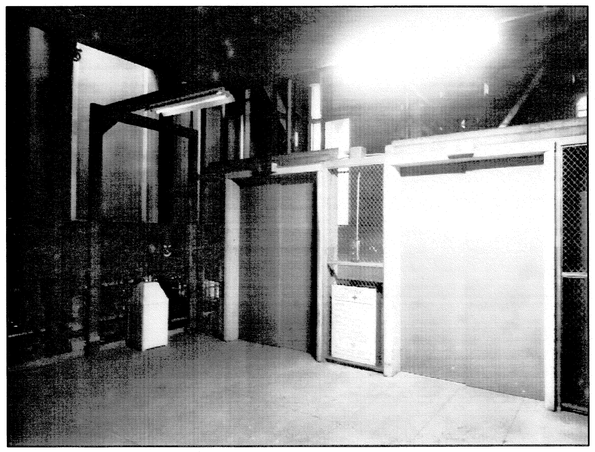

PLATFORM F TOWER E (5)
SCALE: NTS ED-102 | ED-501

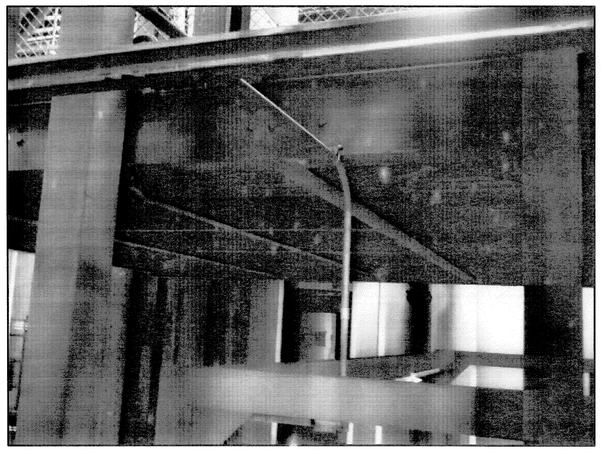

PLATFORM F TOWER E (6)
SCALE: NTS ED-102 | ED-501

PLATFORM F TOWER E (7)
SCALE: NTS ED-102 | ED-501

WHEN PRINTED FULL SIZE, THIS SHEET IS 34"X44"
THIS COMPUTER DRAWING WAS
CREATED IN AUTOCAD AND
FILED UNDER THE DRAWING NUMBER

ED-501

SYM	ZONE	DESCRIPTION	DATE	APPROVAL
		REVISIONS		

RS&H IMPROVING YOUR WORLD
Reynolds, Smith and Hills, Inc.
115 Alma Blvd, Suite 101
Merritt Island, Florida 32953-4101
(321) 453-0212 (321) 453-0223 FAX
www.rsandh.com

SIGNATURES	DATE
DRAWN: JOSEPH HAUER	08-20-2013
CHECKED: DANIEL VICEANT	08-20-2013
SUBMITTED: ARCHIVING OF RECORD: KEVIN HARRIS	08-20-2013
ST OF LICENSURE: FL LICENSE NO: 68533	
APPROVED: JOHN KERCSMAR	8.20.13
MIKE HARTNETT	11/5/13

NATIONAL AERONAUTICS AND SPACE ADMINISTRATION
JOHN F. KENNEDY SPACE CENTER, NASA
KENNEDY SPACE CENTER, FLORIDA

LAUNCH COMPLEX 39
VEHICLE ASSEMBLY BUILDING
MODIFY VEHICLE ASSEMBLY BUILDING HIGH BAY 3 FOR SLS – ELEVATOR LANDINGS ELECTRICAL DEMOLITION ELEVATOR PLATFORM – DETAILS 2

FILE NO. 302-6058-043 | SIZE E | DWG. NO. 79K39665 | REV
PROJ. NO. PCN 99000.5 | SHEET 31 OF

NOTICE – WHEN GOVERNMENT DRAWINGS, SPECIFICATIONS, OR OTHER DATA ARE USED FOR ANY PURPOSE OTHER THAN IN CONNECTION WITH A DEFINITELY RELATED GOVERNMENT PROCUREMENT OPERATION, THE UNITED STATES GOVERNMENT THEREBY INCURS NO RESPONSIBILITY NOR ANY OBLIGATION WHATSOEVER; AND THE FACT THAT THE GOVERNMENT MAY HAVE FORMULATED, FURNISHED, OR IN ANY WAY SUPPLIED THE SAID DRAWINGS, SPECIFICATIONS, OR OTHER DATA IS NOT TO BE REGARDED BY IMPLICATION OR OTHERWISE IN ANY MANNER LICENSING THE HOLDER OR ANY OTHER PERSON OR CORPORATION, OR CONVEYING ANY RIGHTS OR PERMISSION TO MANUFACTURE, USE, OR SELL ANY PATENTED INVENTION THAT IN ANY WAY BE RELATED THERETO.

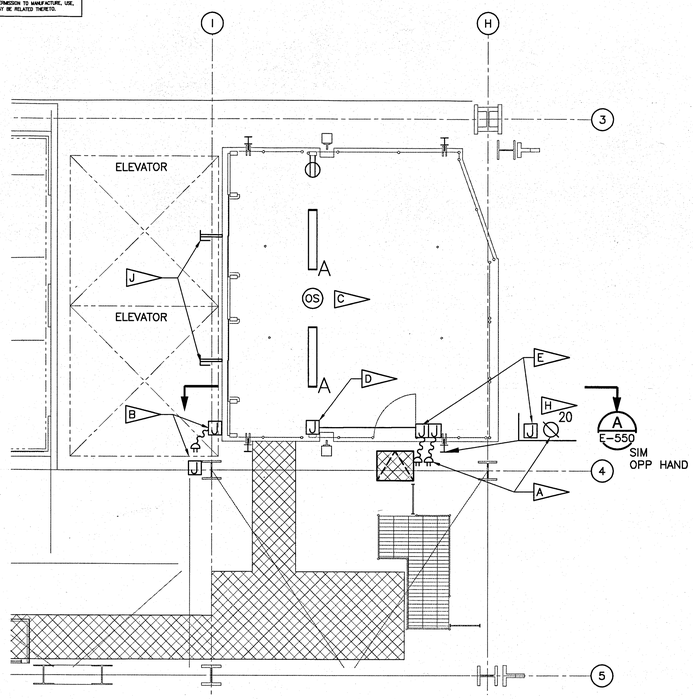

EXISTING ELEVATOR LANDING PLATFORMS TO BE MODIFIED - TOWER F
SCALE: 1/4" = 1'-0"

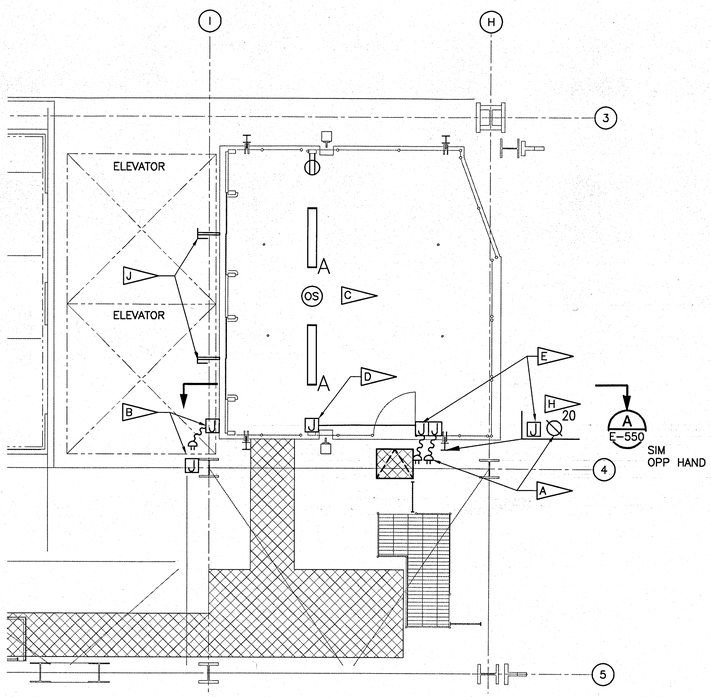

NEW ELEVATOR LANDING PLATFORMS - TOWER F
SCALE: 1/4" = 1'-0"

SPECIFIC NOTES:

A. PROVIDE NEMA L5-20R RECEPTACLES SUPPORTED FROM COLUMN. LOCATE RECEPTACLES AT 48" ABOVE TOS BEGINNING WITH LEVEL 6 THRU 34. MATING OF POWER SHALL BE FROM FLIP PLATFORM ACCESS (NIC). PROVIDE MATING PLUG WITH 30' SLACK CABLE, YELLOW INSULATED TYPE SOOW. PROVIDE CORD GRIP SUPPORT AT ELEVATOR PLATFORM POWER JUNCTION BOX AND AT MATING RECEPTACLE TO SUPPORT SLACK CABLE.

B. COORDINATE ELEVATOR PLATFORM ELEVATOR CONTROL REQUIREMENTS WITH SPECIFICATIONS AND EXISTING ELEVATOR MACHINERY. FOR EACH ELEVATOR PLATFORM, PROVIDE 30' SLACK MULTI-CONDUCTOR CONTROL CABLE FOR INTERFACING WITH THE EXISTING/ REWORKED ELEVATOR CONTROL RISER. CONNECTIONS SHALL BE PERFORMED WITH LOCKING TYPE PIN AND SLEEVE CONTROL CABLE PLUGS AND MATCHING RECEPTACLES. COORDINATE THE ELEVATOR CONTROLS SUCH THAT A PROVIDED ELEVATOR PLATFORM PIN AND SLEEVE RECEPTACLE IS INSTALLED ALONG THE ELEVATOR CONTROL RISER AT EVERY OTHER FLOOR FOR INTERFACING THE PLATFORM ELEVATOR CONTROL REQUIREMENTS (I.E. CALL STATIONS, DIRECTION INDICATORS AND HATCHWAY DOOR CONTROLS). PROVIDE MATING PLUG AND STRAIN RELIEF FITTINGS AT PLATFORM JUNCTION BOX FOR INTERFACING WITH ELEVATOR CONTROL RISER. SERIAL CIRCUITING ALONG THE ELEVATOR RISER SHALL BE PROVIDED WITH SHORTING PLUGS AS REQUIRED FOR PROPER OPERATION. ACCESS FOR MATING AND DEMATING ELEVATOR CONTROLS SHALL BE FROM ELEVATOR CAR TOPS AND SHALL BE PERFORMED BY QUALIFIED ELEVATOR TECHNICIANS ONLY.

C. PROVIDE TWO TYPE A LIGHT FIXTURE WITH OCCUPANCY SENSOR, MOUNTED TO THE STRUCTURAL TUBE FRAMING OF THE ELEVATOR PLATFORM. POWER FOR LIGHTING AND CONVENIENCE RECEPTACLE IS SHARED AND SUPPLIED FROM FACILITY MOUNTED NEMA L5-20R MENTIONED IN NOTE 'A'.

D. PROVIDE EMERGENCY STOP RECEPTACLE AND JUNCTION BOX TO BE USED FOR ELEVATOR PLATFORM HOIST EMERGENCY STOP PENDANT INTERFACE. SEE DETAIL ON E-550 FOR CLARIFICATION.

E. PROVIDE HOIST EMERGENCY STOP CABLING, CORD PLUG AND FACILITY INTERFACE RISER. FACILITY INTERFACE RISER SHALL CONSIST OF EMERGENCY STOP RECEPTACLES AT 48" ABOVE TOS BEGINNING WITH LEVEL 6 THRU 34. MATING OF EMERGENCY STOP INTERFACE SHALL BE ADJACENT TO POWER INTERFACE AND BE FROM FLIP PLATFORM ACCESS (NIC). PROVIDE MATING PLUG WITH 30' SLACK CABLE, YELLOW INSULATED TYPE SOOW. PROVIDE CORD GRIP SUPPORT AT ELEVATOR PLATFORM E-STOP JUNCTION BOX AND AT MATING RECEPTACLE TO SUPPORT SLACK CABLE. EXTEND FACILITY RISER EMERGENCY STOP CIRCUITING FROM LEVEL 34, TO ELEVATOR HOIST CONTROLLER (NIC). PROVIDE INTERFACE WITH EXISTING EMERGENCY STOP CIRCUIT AND CONTROL CIRCUIT FOR PENDANT CONTINUITY INDICATION.

F. SEE PANEL SCHEDULES ON SHEETS E-670 AND E-671 FOR INCLUSION OF NEW CIRCUITRY SHOWN IN TABLE. PANELS IN TOWER E ARE LOCATED BETWEEN COLUMN LINES 10 AND 11 WEST OF TOWER E HIGH BAY 1 ELEVATOR LOBBY. PANELS IN TOWER F ARE LOCATED BETWEEN COLUMN LINES 3 AND 4 WEST OF TOWER F ELEVATOR LOBBY.

G. SLACK CABLES SHALL BE FREE TO TRAVEL 30'-0" UP OR DOWN FROM THEIR INSTALLED LOCATIONS. INSTALLATION METHODS SHALL PREVENT CABLES BEING ROUTED OVER SHARP EDGES AND SHALL BE FREE OF OBSTRUCTIONS THROUGHOUT PLATFORM TRAVEL OF 30'-0" OR LESS.

H. ACCESS FOR MATING OR DEMATING POWER AND HOIST EMERGENCY STOP CIRCUITING SHALL BE FROM FLIP PLATFORM ACCESS.

J. REPLACE EXISTING FIXED POSITION ELEVATOR VANES WITHIN THE ELEVATOR SHAFT FOR THE OPERATIONS OF REAR (VEHICLE) PLATFORMS. NEW VANES SHALL BE PROVIDE FOR EACH CAR ON EACH MODIFIED OR NEW ELEVATOR PLATFORM. SUPPORT VANES FROM ADJUSTABLE PLATFORMS STRUCTURE. COORDINATE MOUNTING AND LOCATIONS WITH CONTRACTING OFFICER'S TECHNICAL REPRESENTATIVE FOR ELEVATORS.

POWER CIRCUITING (F)		
MOUNT AT 48" ABOVE TOS	TOWER E	TOWER F
LEVELS 6, 7 & 8	PANEL 7ELB-2	PANEL 10FLB-16
LEVELS 9, 10 & 11	PANEL 11ELB-1	PANEL 10FLB-18
LEVELS 12, 13 & 14	PANEL 11ELB-2	PANEL 16FLB-9
LEVELS 15, 16 & 17	PANEL 16ELB-15	PANEL 16FLB-11
LEVELS 18, 19 & 20	PANEL 20ELB-2	PANEL 16FLB-13
LEVELS 21, 22 & 23	PANEL 20ELB-4	PANEL 25FLB-14
LEVELS 24, 25 & 26	PANEL 24ELB-16	PANEL 25FLB-16
LEVELS 27, 28 & 29	PANEL 30ELB-4	PANEL 28ELB-12
LEVELS 30, 31 & 32	PANEL 32ELB-1	PANEL 32FLB-2
LEVELS 33 & 34	PANEL 32ELB-3	PANEL 32FLB-10

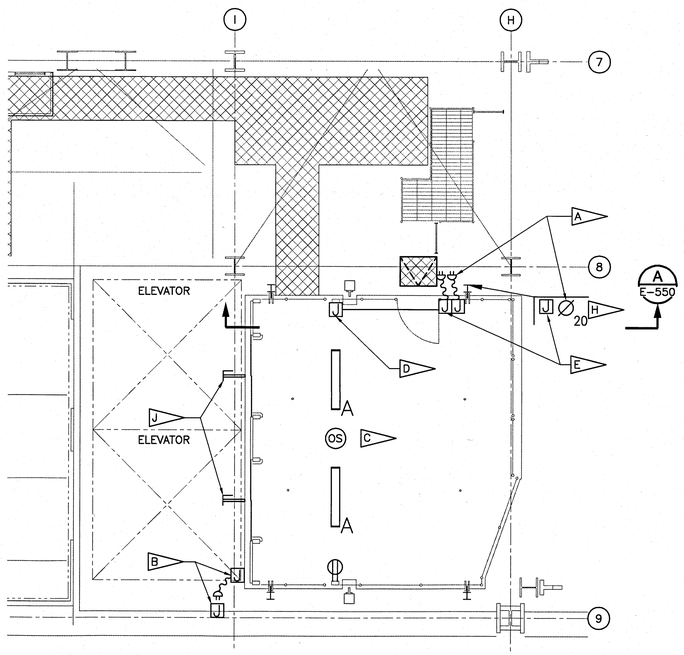

EXISTING ELEVATOR LANDING PLATFORMS TO BE MODIFIED - TOWER E
SCALE: 1/4" = 1'-0"

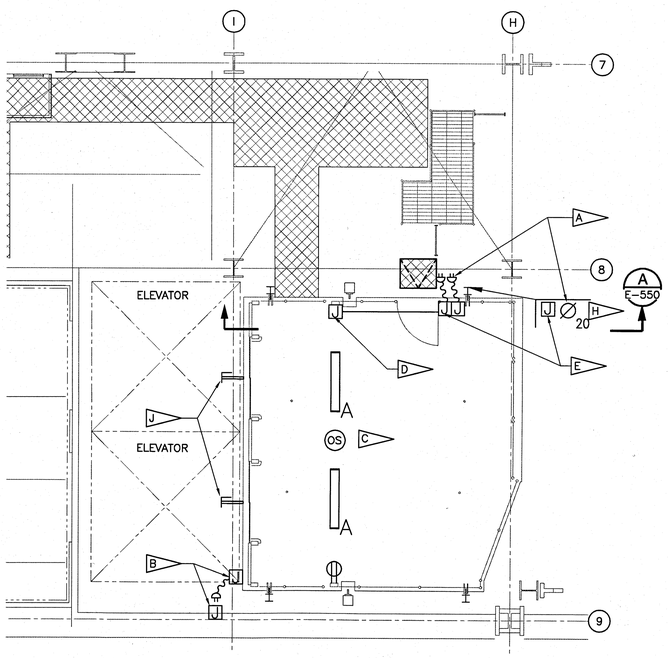

NEW ELEVATOR LANDING PLATFORMS - TOWER E
SCALE: 1/4" = 1'-0"

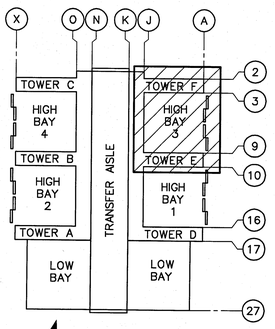

VAB KEY PLAN
SCALE: NTS

2 1 0 2 4 6 8 10
1/4 IN = 1 FT

WHEN PRINTED FULL SIZE, THIS SHEET IS 34"X44"
THIS COMPUTER DRAWING WAS CREATED IN AUTOCAD AND FILED UNDER THE DRAWING NUMBER E-100

SYM	ZONE	DESCRIPTION	DATE	APPROVAL
		REVISIONS		

RS&H IMPROVING YOUR WORLD
Reynolds, Smith and Hills, Inc.
115 Alma Blvd, Suite 101
Merritt Island, Florida 32953-4101
(321) 453-0212 (321) 453-0223 FAX
www.rsandh.com

SIGNATURES	DATE
DRAWN: JOSEPH HAUER	08-20-2013
CHECKED: DANIEL VICEANT	08-20-2013
SUBMITTED: ARCHENG OF RECORD KEVIN HARRIS	08-20-2013
ST OF LICENSURE: FL LICENSE NO: 68533	
APPROVED: JOHN KERCSMAR	8.20.13
MIKE HARTNETT	11/5/13

NATIONAL AERONAUTICS AND SPACE ADMINISTRATION
JOHN F. KENNEDY SPACE CENTER, NASA
KENNEDY SPACE CENTER, FLORIDA

LAUNCH COMPLEX 39
VEHICLE ASSEMBLY BUILDING
MODIFY VEHICLE ASSEMBLY BUILDING HIGH BAY 3 FOR SLS – ELEVATOR LANDINGS
ELEVATOR LANDINGS – ELECTRICAL PLAN

FILE NO. 302-6058-043 | SIZE E | DWG. NO. 79K39665 | REV
PROJ. NO. PCN 99000.5 | SHEET 32 OF

NOTICE – WHEN GOVERNMENT DRAWINGS, SPECIFICATIONS, OR OTHER DATA ARE USED FOR ANY PURPOSE OTHER THAN IN CONNECTION WITH A DEFINITELY RELATED GOVERNMENT PROCUREMENT OPERATION, THE UNITED STATES GOVERNMENT THEREBY INCURS NO RESPONSIBILITY NOR ANY OBLIGATION WHATSOEVER; AND THE FACT THAT THE GOVERNMENT MAY HAVE FORMULATED, FURNISHED, OR IN ANY WAY SUPPLIED THE SAID DRAWINGS, SPECIFICATIONS OR ANY OTHER DATA IS NOT TO BE REGARDED BY IMPLICATION OR OTHERWISE IN ANY MANNER LICENSING THE HOLDER OR ANY OTHER PERSONS OR CORPORATION, OR CONVEYING ANY RIGHTS OR PERMISSION TO MANUFACTURE, USE, OR SELL ANY PATENTED INVENTION THAT IN ANY WAY BE RELATED THERETO.

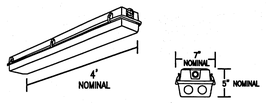

LUMINAIRE REQUIREMENTS:

1. HOUSING – ONE–PIECE, IMPACT–RESISTANT, FIBERGLASS REINFORCED POLYESTER WITH ENCLOSED COLD–ROLLED STEEL WIREWAY.
2. FINISH – STEEL REFLECTOR WITH MULTI–STAGE PHOSPHATE BONDING TREATMENT FINISHED WITH HIGH REFLECTANCE (MINIMUM 85%), BAKED WHITE ENAMEL FINISH.
3. LENS – 100% CLEAR ACRYLIC/DR OPTICAL DIFFUSER. STIPPLED INTERIOR SURFACES AND SMOOTH EXTERIOR. CLOSED CELL NEOPRENE GASKET WITH CAPTIVE NONMETALLIC, SNAP ACTION CAM LATCHES TO SECURE LENS TO HOUSING.
4. LAMPS – LINEAR FLUORESCENT T5, TYPICALLY WITH (2) 54W HIGH OUTPUT LAMPS.
5. BALLAST – CLASS P, THERMALLY–PROTECTED, HIGH POWER FACTOR (.95), ELECTRONIC TYPE WITH SOUND RATING A. SEE SPECIFICATION OR LIGHTING FIXTURE SCHEDULE FOR BALLAST OPTIONS AND SPECIFICS.
6. CERTIFICATION – UL LISTED AND LABELED. SUITABLE FOR DAMP OR WET LOCATION.
7. INSTALLATION – SURFACE CEILING MOUNTING ON ELEVATOR STRUCTURAL STEEL TUBE FRAMING (SIMILAR TO EXISTING).

TYPE A: WET LOCATION INDUSTRIAL FLUORESCENT
SCALE: NTS

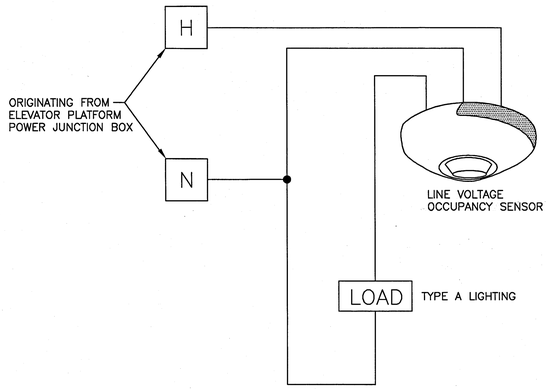

TYPICAL ELEVATOR PLATFORM LIGHTING CONTROL DETAIL
SCALE: NTS

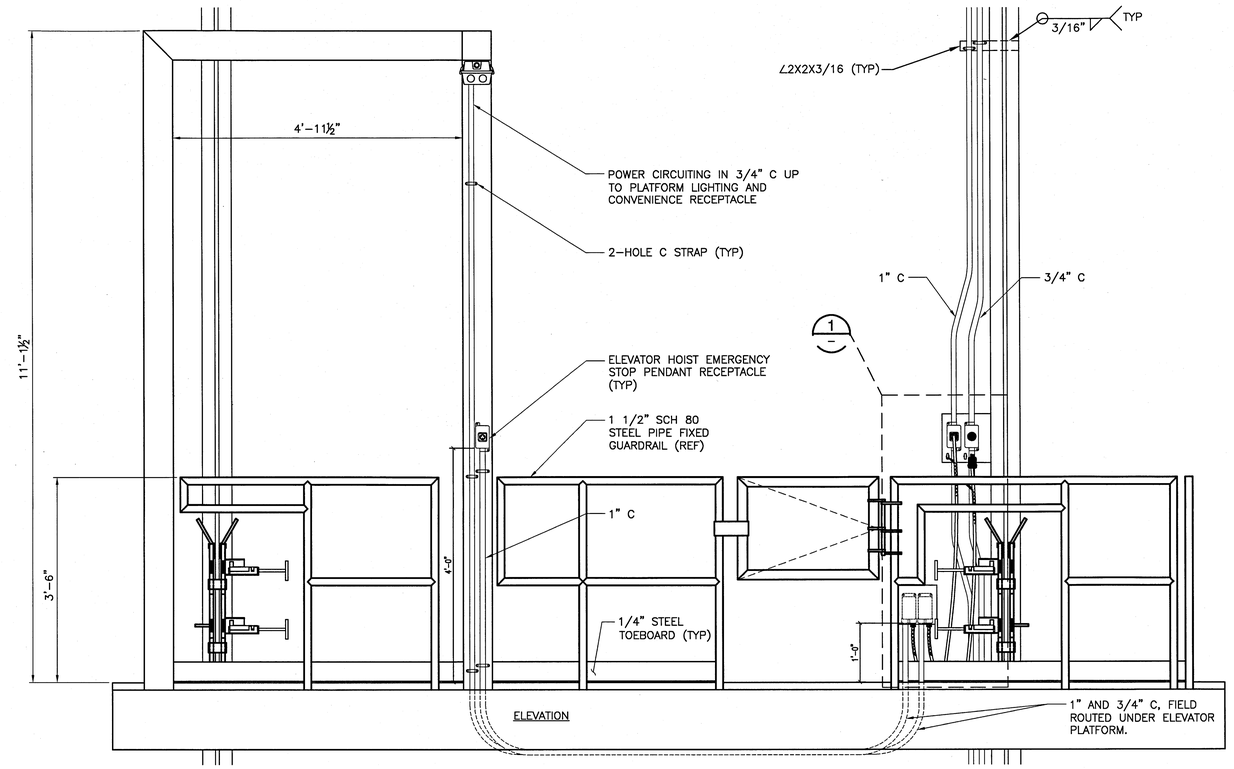

ELECTRICAL INTERFACE ELEVATOR LANDING PLATFORM (A / E–100)
SCALE: 1" = 1'–0"

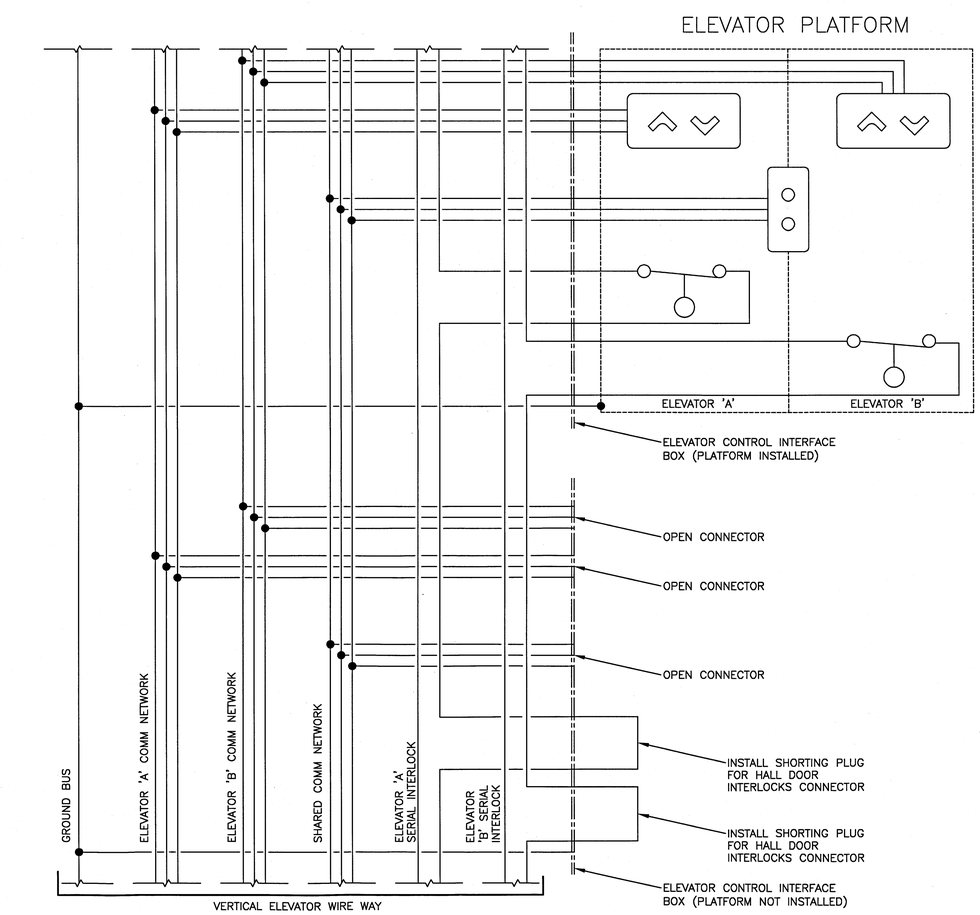

TYPICAL ELEVATOR CONTROL INTERFACE WIRING DIAGRAM
SCALE: NTS

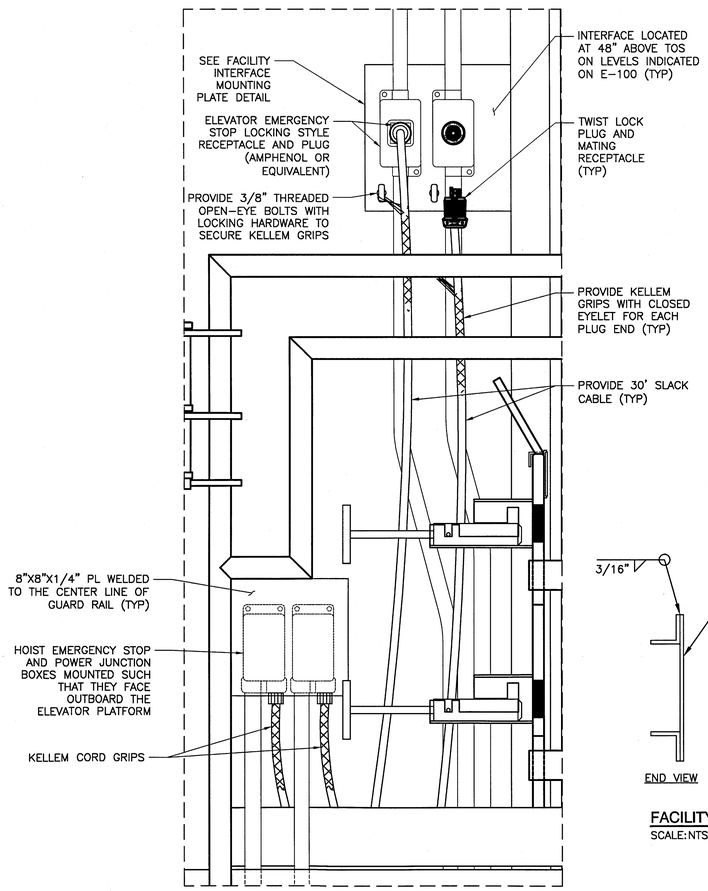

ENLARGED VIEW (1 / –)
SCALE: 3" = 1'–0"

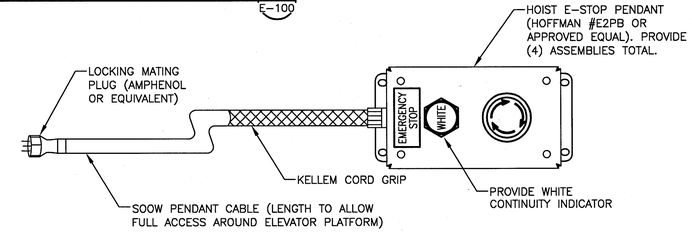

HOIST EMERGENCY STOP PENDANT DETAIL
SCALE: NTS

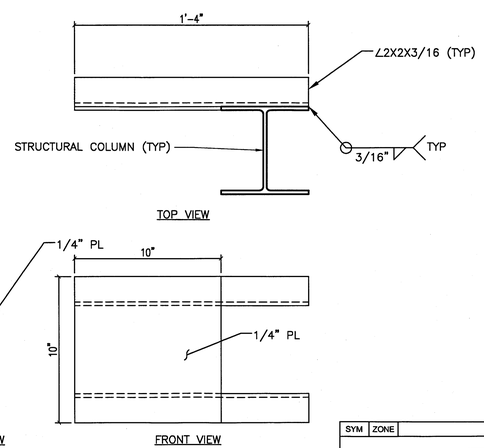

FACILITY INTERFACE MOUNTING PLATE DETAIL
SCALE: NTS

SYM	ZONE	DESCRIPTION	DATE	APPROVAL
		REVISIONS		

RS&H IMPROVING YOUR WORLD
Reynolds, Smith and Hills, Inc.
115 Alma Blvd, Suite 101
Merritt Island, Florida 32953–4101
(321) 453-0212 (321) 453-0223 FAX
www.rsandh.com

SIGNATURES	DATE
DRAWN: JOSEPH HAUER	08-20-2013
CHECKED: DANIEL VICENT	08-20-2013
SUBMITTED: ARCHIVING OF RECORD: KEVIN HARRIS	08-20-2013
ST OF LICENSURE: FL LICENSE NO: 68533	
APPROVED: JOHN KERCSMAR	8.20.13
MIKE HARTNETT	11/5/13

NATIONAL AERONAUTICS AND SPACE ADMINISTRATION
JOHN F. KENNEDY SPACE CENTER, NASA
KENNEDY SPACE CENTER, FLORIDA

LAUNCH COMPLEX 39
VEHICLE ASSEMBLY BUILDING

MODIFY VEHICLE ASSEMBLY BUILDING HIGH BAY 3 FOR SLS – ELEVATOR LANDINGS ELEVATOR PLATFORM – ELECTRICAL DETAILS

FILE NO. 302-6058-043 | SIZE E | DWG. NO. 79K39665 | REV
PROJ. NO. PCN 99000.5 | SHEET 33 OF

WHEN PRINTED FULL SIZE, THIS SHEET IS 34"X44"
THIS COMPUTER DRAWING WAS CREATED IN AUTOCAD AND FILED UNDER THE DRAWING NUMBER

E–550

NOTICE – WHEN GOVERNMENT DRAWINGS, SPECIFICATIONS, OR OTHER DATA ARE USED FOR ANY PURPOSE OTHER THAN IN CONNECTION WITH A DEFINITELY RELATED GOVERNMENT PROCUREMENT OPERATION, THE UNITED STATES GOVERNMENT THEREBY INCURS NO RESPONSIBILITY NOR ANY OBLIGATION WHATSOEVER; AND THE FACT THAT THE GOVERNMENT MAY HAVE FORMULATED, FURNISHED, OR IN ANY WAY SUPPLIED THE SAID DRAWINGS, SPECIFICATIONS, OR OTHER DATA IS NOT TO BE REGARDED BY IMPLICATION OR OTHERWISE AS IN ANY MANNER LICENSING THE HOLDER OR ANY OTHER PERSON OR CORPORATION, OR CONVEYING ANY RIGHTS OR PERMISSION TO MANUFACTURE, USE, OR SELL ANY PATENTED INVENTION THAT IN ANY WAY BE RELATED THERETO.

PANEL 7ELB

GE NLAB

120/208□ VOLTS, 3 PHASE, SURFACE MOUNT, 4 WIRE, 225 AMP BUS, 200 MCB (TOP)

LOCATION: TOWER E - CORRIDOR 7TH FL
FED FROM: PNL 10EPA CKT 16
ENCLOSURE: NEMA 1

CKT	TRIP	PHASE	NEUTRAL	GND	COND	DEMAND HVAC	DEMAND LGTS	DEMAND RECP	DEMAND GEN	KVA	NOTES	LOAD	A	B	C	LOAD	NOTES	KVA	DEMAND HVAC	DEMAND LGTS	DEMAND RECP	DEMAND GEN	COND	GND	NEUTRAL	PHASE	TRIP	CKT
1	20	#12	#12	#12	3/4"		X					LTG-RM 7E1,7E1A & 7E2	X			ELEV PLAT LVL 6, 7 & 8		0.4		X			3/4"	#10	#10	#10	20	2
3	20	#12	#12	#12	3/4"		X					LTG-RM 7E3, 7E4,7E5, 7E5A		X		RECPT-ALCOVE W END CORR					X		3/4"	#12	#12	#12	20	4
5	20	#12	#12	#12	3/4"		X					LTG-FAN RM Y			X	RECPT-ALCOVE W END CORR					X		3/4"	#12	#12	#12	20	6
7	20	#12	#12	#12	3/4"			X				RECPT-CORRIDOR	X			RECPT-RM 7E1A					X		3/4"	#12	#12	#12	20	8
9	20	#12	#12	#12	3/4"			X				RECPT-ALCOVE W END CORR		X		RECPT-RM 7E2					X		3/4"	#12	#12	#12	20	10
11	20	#12	#12	#12	3/4"			X				RECPT-RM 7E1A			X	RECPT-RM 7E1A					X		3/4"	#12	#12	#12	20	12
13	20	#12	#12	#12	1/2"			X				RECPT-RM 7E1	X			RECPT-S CROSSWALK, TWR D					X		1/2"	#12	#12	#12	20	14
15	20	#12	#12	#12	3/4"			X				RECPT-RM 7E1		X		RECPT N CROSSWALK, CATWALK					X		1/2"	#12	#12	#12	20	16
17	20	#12	#12		1/2"			X				RECPT-RM 7E15, VENDING			X	RECPT-RM 7E2,7E4,7E15 & CORR					X		3/4"		#12	#12	20	18
19	20	#12	#12		1/2"			X				RECPT-RM 7E15, VENDING	X			RECPT-RM 7E2,7E4,7E15 & CORR					X		3/4"	#12		#12	20	20
21	20	#12	#12	#12	3/4"			X				RECPT-FAN RM Y		X							X					#12		22
23	20	#12	#12	#12	3/4"			X				RECPT-RM 7E1 & 7E2			X	RECPT-N JIB CRANE, CATWALK					X		3/4"	#12	#12	#12	20	24
25	20	#12	#12	#12	3/4"			X				RECPT-CLOCKS	X			RECPT-S JIB CRANE, CATWALK					X		3/4"	#12	#12	#12	20	26
27	20	#12	#12	#12	3/4"			X				RECPT-RM 7E7, 7E9 & 7E13		X		RECPT - N 7E15					X		1/2"	#12	#12	#12	20	28
29	20	#12	#12	#12	1/2"			X				RECPT-RM 7E7, 7E9, &7E13			X	RECPT - N 7E15					X		1/2"	#12	#12	#12	20	30
31	20	#12	#12	#12	1/2"			X				RECPT-RM 7E9	X			RECPT - N 7E15					X		1/2"	#12	#12	#12	20	32
33	20	#12	#12	#12	3/4"			X				RECPT-RM 7E7 & 7E9		X		RECPT-RM 7E6, 7E8, 7E10 & 7E12					X		3/4"	#12	#12	#12	20	34
35	20	#12	#12	#12	1/2"			X				RECPT-RM 7E7 & 7E11			X	RECPT-RM 7E6, 7E8, 7E10 & 7E12					X		3/4"	#12	#12	#12	20	36
37	20	#12	#12	#12	3/4"			X				REC-RM 7E9,7E10,7E11,7E12&7E13	X			RECPT-RM 7E6, 7E8, 7E10 & 7E12					X		3/4"	#12	#12	#12	20	38
39	20	#12	#12	#12	3/4"			X				RECPT-RM 7E11 & 7E12		X		RECPT-RM 7E8 & 7E8					X		3/4"	#12	#12	#12	20	40
41	20											SPARE			X	RECPT-RM 7E6					X		3/4"	#12	#12	#12	20	42

Notes:

NEC 220.51	100%	EST DEMAND LOAD HVAC (KVA):	0.0
NEC 220.42 for All others	100%	EST DEMAND LOAD LGTS (KVA):	0.4
NEC 220.44 (0-10KVA@100%, X>10KVA@50%		EST DEMAND LOAD RECP (KVA):	0.0
NEC 220.14	100%	EST DEMAND LOAD GEN (KVA):	0.0
		TOTAL ESTIMATED DEMAND LOAD (KVA):	0.4

PHASE A CONNECTED LOAD (KVA):	0.4
PHASE B CONNECTED LOAD (KVA):	0.0
PHASE C CONNECTED LOAD (KVA):	0.0
TOTAL CONNECTED LOAD (KVA):	**0.4**
TOTAL CONNECTED LOAD (AMPS):	**1.2**

PANEL 16ELB

GE NLAB

120/208□ VOLTS, 3 PHASE, SURFACE MOUNT, 4 WIRE, 225 AMP BUS, 200 MCB (BOTTOM)

LOCATION: TOWER E -CORRIDOR 16TH FL
FED FROM: PNL 16EPA CKT 28 (SEC 1)
ENCLOSURE: NEMA 1

CKT	TRIP	PHASE	NEUTRAL	GND	COND	DEMAND HVAC	DEMAND LGTS	DEMAND RECP	DEMAND GEN	KVA	NOTES	LOAD	A	B	C	LOAD	NOTES	KVA	DEMAND HVAC	DEMAND LGTS	DEMAND RECP	DEMAND GEN	COND	GND	NEUTRAL	PHASE	TRIP	CKT
1	20	#12	#12	#12	1/2"		X					LTG-RM 16E3,4,4A,5	X			RECPT-CATWALK N ON COL					X		1/2"	#12	#12	#12	20	2
3	20	#12	#12	#12	1/2"		X					LTG-RM 16E1,2, UTILITY RM		X		RECPT-CATWALK N					X		1/2"	#12	#12	#12	20	4
5	20	#12	#12	#12	1/2"			X				RECPT-CATWALK S ON COL			X	LTG-CATWALK N				X			1/2"	#12	#12	#12	20	6
7	20	#12	#12	#12	1/2"			X				RECPT-CATWALK	X			LTG-N FRAN RM				X			1/2"	#12	#12	#12	20	8
9	20	#12	#12	#12	3/4"	X						LTG- S CATWALK		X		FAN-RM 16E13						X	3/4"	#12	#12	#12	20	10
11	20	#12	#12	#12	3/4"				X			FAN-RM 16E15			X	SPARE											20	12
13	20	#12	#12	#12	3/4"				X			FIRE ALARM RELAY	X			RECPT-VENDING					X		3/4"	#12	#12	#12	20	14
15	20	#10	#10	#10	3/4"	X				0.4		ELEV PLAT LVL 15, 16 &17		X		RECPT-VENDING					X		3/4"	#12	#12	#12	20	16
17	20	#12	#12	#12	3/4"			X				RECPT-CATWALK W			X	SPARE											20	18
19	20	#12	#12	#12	3/4"			X				RECPT-STORAGE RM	X			RECPT-RM 16E4, CLEANING					X		3/4"	#12	#12	#12	20	20
21	20	#12	#12	#12	3/4"			X				RECPT-FAN RM N				RECPT-CLEANING					X		3/4"	#12		#12	20	22
23	20	#12	#12	#12	1/2"			X				RECPT-RM 16E1,2			X						X					#12		24
25	20	#12	#12	#12	1/2"			X				RECPT-STORAGE RM	X			RECPT-CLOCKS					X		3/4"	#12	#12	#12	20	26
27	20											SPARE			X	RECPT-STORAGE RM					X		1/2"	#12	#12	#12	20	28
29												SPACE			X	SPACE												30

Notes:

NEC 220.51	100%	EST DEMAND LOAD HVAC (KVA):	0.0
NEC 220.42 for All others	100%	EST DEMAND LOAD LGTS (KVA):	0.4
NEC 220.44 (0-10KVA@100%, X>10KVA@50%		EST DEMAND LOAD RECP (KVA):	0.0
NEC 220.14	100%	EST DEMAND LOAD GEN (KVA):	0.0
		TOTAL ESTIMATED DEMAND LOAD (KVA):	0.4

PHASE A CONNECTED LOAD (KVA):	0.4
PHASE B CONNECTED LOAD (KVA):	0.4
PHASE C CONNECTED LOAD (KVA):	0.0
TOTAL CONNECTED LOAD (KVA):	**0.4**
TOTAL CONNECTED LOAD (AMPS):	**1.2**

PANEL 24ELB

GE NLAB

120/208□ VOLTS, 3 PHASE, SURFACE MOUNT, 4 WIRE, 225 AMP BUS, 200 MCB (BOTTOM)

LOCATION: TOWER E - CORRIDOR 24TH FL
FED FROM: PNL 22EPA CKT 22
ENCLOSURE: NEMA 1

CKT	TRIP	PHASE	NEUTRAL	GND	COND	DEMAND HVAC	DEMAND LGTS	DEMAND RECP	DEMAND GEN	KVA	NOTES	LOAD	A	B	C	LOAD	NOTES	KVA	DEMAND HVAC	DEMAND LGTS	DEMAND RECP	DEMAND GEN	COND	GND	NEUTRAL	PHASE	TRIP	CKT
1	20	#12	#12	#12	1/2"		X					LTG-RM 24E1,1A,2, CLOSET	X			RECPT-RM 24E16A					X		1/2"	#12	#12	#12	20	2
3	20	#12	#12	#12	1/2"		X					LTG-RM 24E3,4,5,5A		X		RECPT-RM 24E16A					X		1/2"	#12	#12	#12	20	4
5	20	#12	#12	#12	1/2"			X				RECPT-RM 24E1A			X	RECPT-RM 24E2					X		1/2"	#12	#12	#12	20	6
7	20	#12	#12	#12	1/2"			X				RECPT-RM 24E1	X			RECPT-RM 24E1A					X		1/2"	#12	#12	#12	20	8
9	20	#12	#12	#12	1/2"			X				RECPT-RM 24E1		X		RECPT-RM 24E1A					X		1/2"	#12	#12	#12	20	10
11	20	#12	#12	#12	1/2"				X			RECPT-VEND, W CORR, RM C24F1S			X	XEROX JBOX, W CORR, RM C24E1N					X		1/2"	#12	#12	#12	20	12
13	20	#12	#12	#12	1/2"				X			RECPT-VEND, W CORR, RM C24E1S	X			RECPT-VEND, W CORR, RM C24E1N					X		3/4"	#12	#12	#12	20	14
15	20	#12	#12	#12	3/4"			X				RECPT-CLEANING RM 24E1		X		ELEV PLAT LVL 24, 25 & 26		0.4		X			3/4"	#10	#10	#10	20	16
17	20	#12	#12	#12	3/4"			X				RECPT-CLEANING RM 24E23, CORR			X	RECPT-RM 24E2,16, CORR					X		2"	#12	#12	#12	20	18
19		#12						X					X			RECPT-CLEANING					X		1/2"	#12	#12	#12	20	20
21	20	#12	#12	#12	3/4"			X				RECPT-RM 24E16A		X		RECPT-RM 24E16A					X		3/4"	#12	#12	#12	20	22
23												SPACE			X	SPACE												24

Notes:

NEC 220.51	100%	EST DEMAND LOAD HVAC (KVA):	0.0
NEC 220.42 for All others	100%	EST DEMAND LOAD LGTS (KVA):	0.4
NEC 220.44 (0-10KVA@100%, X>10KVA@50%		EST DEMAND LOAD RECP (KVA):	0.0
NEC 220.14	100%	EST DEMAND LOAD GEN (KVA):	0.0
		TOTAL ESTIMATED DEMAND LOAD (KVA):	0.4

PHASE A CONNECTED LOAD (KVA):	0.0
PHASE B CONNECTED LOAD (KVA):	0.4
PHASE C CONNECTED LOAD (KVA):	0.0
TOTAL CONNECTED LOAD (KVA):	**0.4**
TOTAL CONNECTED LOAD (AMPS):	**1.2**

PANEL 11ELB

GE NLAB

120/208□ VOLTS, 3 PHASE, SURFACE MOUNT, 4 WIRE, 225 AMP BUS, 200 MCB (BOTTOM)

LOCATION: TOWER E -RM 11E1 11TH FL
FED FROM: PNL 10EPA CKT 16
ENCLOSURE: NEMA 1

CKT	TRIP	PHASE	NEUTRAL	GND	COND	DEMAND HVAC	DEMAND LGTS	DEMAND RECP	DEMAND GEN	KVA	NOTES	LOAD	A	B	C	LOAD	NOTES	KVA	DEMAND HVAC	DEMAND LGTS	DEMAND RECP	DEMAND GEN	COND	GND	NEUTRAL	PHASE	TRIP	CKT
1	20	#10	#10	#10	3/4"		X			0.4		ELEV PLAT LVL 9, 10 & 11	X			ELEV PLAT LVL 12, 13 & 14		0.4		X			3/4"	#10	#10	#10	20	2
3	20											SPARE		X		SPARE											20	4
5	20	#12	#12	#12	3/4"				X			RECPT-ELEV CORR, CLEANING			X	RECPT-ELEV CORR, RM 11E1					X		3/4"	#12	#12	#12	20	6
7	20	#12	#12		3/4"				X			RECPT-CLEANING (2@ 208V)	X			RECPT-UTILITY SHAFT					X		3/4"	#12	#12	#12	20	8
9		#12							X					X		SPARE											20	10
11												SPACE			X	SPACE												12

Notes:

NEC 220.51	100%	EST DEMAND LOAD HVAC (KVA):	0.0
NEC 220.42 for All others	100%	EST DEMAND LOAD LGTS (KVA):	0.8
NEC 220.44 (0-10KVA@100%, X>10KVA@50%		EST DEMAND LOAD RECP (KVA):	0.0
NEC 220.14	100%	EST DEMAND LOAD GEN (KVA):	0.0
		TOTAL ESTIMATED DEMAND LOAD (KVA):	0.8

PHASE A CONNECTED LOAD (KVA):	0.8
PHASE B CONNECTED LOAD (KVA):	0.0
PHASE C CONNECTED LOAD (KVA):	0.0
TOTAL CONNECTED LOAD (KVA):	**0.8**
TOTAL CONNECTED LOAD (AMPS):	**2.3**

PANEL 20ELB

GE NLAB

120/208□ VOLTS, 3 PHASE, SURFACE MOUNT, 4 WIRE, 225 AMP BUS, 200 MCB (BOTTOM)

LOCATION: TOWER E -RM 20E2 20TH FL
FED FROM: PNL 16EPA CKT 28
ENCLOSURE: NEMA 1

CKT	TRIP	PHASE	NEUTRAL	GND	COND	DEMAND HVAC	DEMAND LGTS	DEMAND RECP	DEMAND GEN	KVA	NOTES	LOAD	A	B	C	LOAD	NOTES	KVA	DEMAND HVAC	DEMAND LGTS	DEMAND RECP	DEMAND GEN	COND	GND	NEUTRAL	PHASE	TRIP	CKT
1	20	#12	#12	#12	1/2"		X					LTG-RM 20E1,2, UTILITY ROOM	X			ELEV PLAT LVL 18, 19 & 20		0.4		X			3/4"	#10	#10	#10	20	2
3	20	#12	#12	#12	1/2"		X					LTG-RM 20E3,4,5,6		X		ELEV PLAT LVL 21, 22 & 23		0.4		X			3/4"	#10	#10	#10	20	4
5	20											SPARE			X	SPARE											20	6
7	20											SPARE	X			RECPT-RM 20E1,2					X		1/2"	#12	#12	#12	20	8
9	20	#12	#12	#12	1/2"			X				RECPT-CATWALK, BAY 3		X		RECPT-CLEANING, ELEV LOBBY					X		3/4"	#12	#12	#12	20	10
11	20											SPARE			X	RECPT-CLEANING, ELEV LOBBY					X		3/4"	#12		#12	20	12
13	20											SPARE	X								X					#12		14
15	20	#12	#12	#12	1/2"			X				RECPT-CATWALK, BAY 3, PLATF S			X	RECPT-CATWALK, BAY 1, PLATF N					X		1/2"	#12	#12	#12	20	16
17	20	#12	#12	#12	1/2"			X				RECPT-CATWALK, BAY 3, PLATF N			X	RECPT-CATWALK, BAY 1, PLATF N					X		1/2"	#12	#12	#12	20	18
19	20	#12	#12	#12	1/2"		X					LTG-CATWALK, BAY 3	X			LTG-CATWALK, BAY 1				X			1/2"	#12	#12	#12	20	20
21												SPACE		X		SPACE												22
23												SPACE			X	SPACE												24

Notes:

NEC 220.51	100%	EST DEMAND LOAD HVAC (KVA):	0.0
NEC 220.42 for All others	100%	EST DEMAND LOAD LGTS (KVA):	0.8
NEC 220.44 (0-10KVA@100%, X>10KVA@50%		EST DEMAND LOAD RECP (KVA):	0.0
NEC 220.14	100%	EST DEMAND LOAD GEN (KVA):	0.0
		TOTAL ESTIMATED DEMAND LOAD (KVA):	0.8

PHASE A CONNECTED LOAD (KVA):	0.4
PHASE B CONNECTED LOAD (KVA):	0.4
PHASE C CONNECTED LOAD (KVA):	0.0
TOTAL CONNECTED LOAD (KVA):	**0.8**
TOTAL CONNECTED LOAD (AMPS):	**2.3**

PANEL 30ELB

GE NLAB

120/208□ VOLTS, 3 PHASE, SURFACE MOUNT, 4 WIRE, 225 AMP BUS, 200 MCB (BOTTOM)

LOCATION: TOWER E - CORRIDOR 30TH FL
FED FROM: PNL 28EPA CKT 22
ENCLOSURE: NEMA 1

CKT	TRIP	PHASE	NEUTRAL	GND	COND	DEMAND HVAC	DEMAND LGTS	DEMAND RECP	DEMAND GEN	KVA	NOTES	LOAD	A	B	C	LOAD	NOTES	KVA	DEMAND HVAC	DEMAND LGTS	DEMAND RECP	DEMAND GEN	COND	GND	NEUTRAL	PHASE	TRIP	CKT
1	20	#12	#12	#12	3/4"		X					LTG-RM 30E12, UTILITY CLOSET	X			RECPT-CLOCKS					X		3/4"	#12	#12	#12	20	2
3	20	#12	#12	#12	3/4"		X					LTG-RM 30E3,4,5,6		X		ELEV PLAT LVL 27, 28 & 29	1	0.4		X			3/4"	#10	#10	#10	20	4
5	20	#12	#12	#12	1/2"			X				RECPT-RM 30E12			X	RECPT-RM 30E8					X		1/2"	#12	#12	#12	20	6
7	20	#12	#12	#12	1/2"			X				RECPT-RM 30E14	X			RECPT-RM 30E10,10A					X		1/2"	#12	#12	#12	20	8
9	20	#12	#12	#12	1/2"			X				RECPT-RM 30E16		X		RECPT-RM 30E7,9					X		1/2"	#12	#12	#12	20	10
11	20	#12	#12	#12	1/2"			X				RECPT-RM30E12,14			X	RECPT-RM 30E11					X		3/4"	#12	#12	#12	20	12
13	20	#12	#12	#12	1/2"			X				RECPT-RM 30E14	X			RECPT-RM 30E11					X		3/4"	#12	#12	#12	20	14
15	20	#12	#12	#12	1/2"			X				RECPT-RM 30E16		X		RECPT-RM 30313					X		3/4"	#12	#12	#12	20	16
17	20	#12	#12	#12	1/2"			X				RECPT-RM 30E8			X	RECPT-RM 30E15					X		3/4"	#12	#12	#12	20	18
19	20	#12	#12	#12	1/2"			X				RECPT-RM 30E10,10A	X			RECPT-RM30E1,3					X		3/4"	#12	#12	#12	20	20
21	20	#12	#12	#12	1/2"			X				RECPT-RM 30E11,13		X		RECPT-VENDING					X		3/4"	#12	#12	#12	20	22
23	20	#12	#12	#12	1/2"			X				RECPT-RM 30E13			X	RECPT-VENDING					X		3/4"	#12	#12	#12	20	24
25	20	#12	#12	#12	1/2"			X				RECPT-RM 30E15	X			RECPT-RM 30E2					X		1/2"	#12	#12	#12	20	26
27	20	#12	#12	#12	3/4"			X				RECPT-RM 30E7		X		SPARE											20	28
29	20	#12	#12	#12	3/4"			X				RECPT-RM 30E9			X	RECPT-CLEANING CORRIDOR					X		3/4"	#12		#12	20	30
31	20											SPARE	X								X					#12		32
33	20											SPARE		X		RECPT-CLEANING CORRIDOR					X		3/4"	#12	#12	#12	20	34
35	20											SPARE			X	SPARE											20	36
37	20											SPARE	X			SPARE											20	38
39	20											SPARE		X		SPARE											20	40
41	20											SPARE			X	SPARE											20	42
43	20											SPARE	X			SPARE											20	44
45	20											SPARE		X		SPARE											20	46
47	20											SPARE			X	SPARE											20	48

Notes:

NEC 220.51	100%	EST DEMAND LOAD HVAC (KVA):	0.0
NEC 220.42 for All others	100%	EST DEMAND LOAD LGTS (KVA):	0.4
NEC 220.44 (0-10KVA@100%, X>10KVA@50%		EST DEMAND LOAD RECP (KVA):	0.0
NEC 220.14	100%	EST DEMAND LOAD GEN (KVA):	0.0
		TOTAL ESTIMATED DEMAND LOAD (KVA):	0.4

PHASE A CONNECTED LOAD (KVA):	0.0
PHASE B CONNECTED LOAD (KVA):	0.4
PHASE C CONNECTED LOAD (KVA):	0.0
TOTAL CONNECTED LOAD (KVA):	**0.4**
TOTAL CONNECTED LOAD (AMPS):	**1.2**

SPECIFIC NOTES:

A. ALL PANELS THIS SHEET ARE EXISTING. FOR LOADS BEING MODIFIED UNDER THIS EFFORT, REFER TO KVA COLUMNS IN SCHEDULES FOR INDICATION OF NEW WORK. ALL LOADS WITH KVA SHOW, REQUIRES THE INSTALLATION OF NEW BREAKERS, CONDUIT AND WIRING AS INDICATED.

PANEL INDEX	
7ELB	11ELB
16ELB	20ELB
24ELB	30ELB

WHEN PRINTED FULL SIZE, THIS SHEET IS 34"X44"
THIS COMPUTER DRAWING WAS CREATED IN AUTOCAD AND FILED UNDER THE DRAWING NUMBER

E-670

SYM	ZONE	DESCRIPTION	DATE	APPROVAL
		REVISIONS		

RS&H IMPROVING YOUR WORLD
Reynolds, Smith and Hills, Inc.
115 Alma Blvd, Suite 101
Merritt Island, Florida 32953-4101
(321) 453-0212 (321) 453-0223 FAX
www.rsandh.com

SIGNATURES		DATE
DRAWN:	JOSEPH HAUER	08-20-2013
CHECKED:	DANIEL VIGEANT	08-20-2013
SUBMITTED: ARCHIVING OF RECORD	KEVIN HARRIS	08-20-2013
ST OF LICENSURE: FL	LICENSE NO: 68533	
APPROVED:	JOHN KERCSMAR	8.20.13
	MIKE HARTNETT	11/5/13

NATIONAL AERONAUTICS AND SPACE ADMINISTRATION
JOHN F. KENNEDY SPACE CENTER, NASA
KENNEDY SPACE CENTER, FLORIDA

LAUNCH COMPLEX 39
VEHICLE ASSEMBLY BUILDING
MODIFY VEHICLE ASSEMBLY BUILDING HIGH BAY 3 FOR SLS – ELEVATOR LANDINGS
PANEL SCHEDULES – SHEET 1

FILE NO. 302-6058-043 | SIZE E | DWG. NO. 79K39665 | REV
PROJ. NO. PCN 99000.5 | SHEET 34 OF

NOTICE — WHEN GOVERNMENT DRAWINGS, SPECIFICATIONS, OR OTHER DATA ARE USED FOR ANY PURPOSE OTHER THAN IN CONNECTION WITH A DEFINITELY RELATED GOVERNMENT PROCUREMENT OPERATION, THE UNITED STATES GOVERNMENT THEREBY INCURS NO RESPONSIBILITY NOR ANY OBLIGATION WHATSOEVER; AND THE FACT THAT THE GOVERNMENT MAY HAVE FORMULATED, FURNISHED, OR IN ANY WAY SUPPLIED THE SAID DRAWINGS, SPECIFICATIONS OR ANY OTHER DATA IS NOT TO BE REGARDED BY IMPLICATION OR OTHERWISE IN ANY MANNER LICENSING THE HOLDER OR ANY OTHER PERSONS OR CORPORATION, OR CONVEYING ANY RIGHTS OR PERMISSION TO MANUFACTURE, USE, OR SELL ANY PATENTED INVENTION THAT IN ANY WAY BE RELATED THERETO.

120/208□ VOLTS — 3 PHASE
SURFACE MOUNT — 4 WIRE
225 AMP BUS — 200 MCB (BOTTOM)

PANEL 32ELB

GE NLAB

LOCATION: TOWER E - 32ND FL
FED FROM: PNL 31EPA CKT 16
ENCLOSURE: NEMA 1

CKT	TRIP	PHASE	NEUTRAL	GND	COND	DEMAND HVAC	DEMAND LGTS	DEMAND RECP	DEMAND GEN	KVA	NOTES	LOAD	A	B	C	LOAD	NOTES	KVA	DEMAND HVAC	DEMAND LGTS	DEMAND RECP	DEMAND GEN	COND	GND	NEUTRAL	PHASE	TRIP	CKT
1	20	#10	#10	#10	3/4"		X			0.4		ELEV PLAT LVL 30, 31 & 32	X			RECPT-RM 32E1, PLATFORM					X		1/2"	#12	#12	#12	20	2
3	20	#10	#10	#10	3/4"		X			0.4		ELEV PLAT LVL 33 &34		X		RECPT-CLEANING, ELEV LOBBY					X		3/4"	#12	#12	#12	20	4
5	20											SPARE			X	RECPT-CLEANING, ELEV LOBBY					X		3/4"	#12		#12	20	6
7		#10							X				X								X						#12		8
9	30	#10			3/4"				X			WATER PUMP, 32ND FL		X		SPARE											20	10
11		#10							X						X													12

Notes:

NEC 220.51	100%	EST DEMAND LOAD HVAC (KVA):	0.0
NEC 220.42 for All others	100%	EST DEMAND LOAD LGTS (KVA):	0.8
NEC 220.44 (0-10KVA@100%, X>10KVA@50%		EST DEMAND LOAD RECP (KVA):	0.0
NEC 220.14	100%	EST DEMAND LOAD GEN (KVA):	0.0
		TOTAL ESTIMATED DEMAND LOAD (KVA):	0.8

PHASE A CONNECTED LOAD (KVA):	0.4
PHASE B CONNECTED LOAD (KVA):	0.4
PHASE C CONNECTED LOAD (KVA):	0.0
TOTAL CONNECTED LOAD (KVA):	**0.8**
TOTAL CONNECTED LOAD (AMPS):	**2.3**

120/208□ VOLTS — 3 PHASE
SURFACE MOUNT — 4 WIRE
225 AMP BUS — 200 MCB (BOTTOM)

PANEL 16FLB

GE NLAB

LOCATION: TOWER F - RM 16F2 VAB
FED FROM: 16FPA CKT 4
ENCLOSURE: NEMA 1

CKT	TRIP	PHASE	NEUTRAL	GND	COND	DEMAND HVAC	DEMAND LGTS	DEMAND RECP	DEMAND GEN	KVA	NOTES	LOAD	A	B	C	LOAD	NOTES	KVA	DEMAND HVAC	DEMAND LGTS	DEMAND RECP	DEMAND GEN	COND	GND	NEUTRAL	PHASE	TRIP	CKT
1	20	#12	#12	#12	1/2"		X					LTG-RM 16F1, 2, UTIL SHAFT	X			LTG-CATWALK, BAY 3, NO. 18				X			1/2"	#12	#12	#12	20	2
3	20	#12	#12	#12	3/4"			X				RECPT-RM 16F2		X		RECPT-LTG, MOVABLE PLATFORM					X		3/4"	#12	#12	#12	20	4
5	20	#12	#12	#12	3/4"			X				RECPT-RM 16F1			X	RECPT-CATWALK, BAY 3, NO.18					X		3/4"	#12	#12	#12	20	6
7	20	#12	#12	#12	1/2"			X				RECPT-CATWALK TO TOWER C	X			RECPT-CATWALK ACROSS TWR					X		3/4"	#12	#12	#12	20	8
9	20	#10	#10	#10	3/4"	X				0.4		ELEV PLAT LVL 12, 13 & 14		X		RECPT-CLEANING, ELEV LOBBY					X		3/4"	#12	#12	#12	20	10
11	20	#10	#10	#10	3/4"	X				0.4		ELEV PLAT LVL 15, 16 & 17			X	RECPT-208V CLEAN, ELEV LOBBY								#12		#12	20	12
13	20	#10	#10	#10	3/4"	X				0.4		ELEV PLAT LVL 18, 19 & 20	X								X		3/4"	#12		#12		14
15												SPACE, NO HARDWARE		X		SPACE, NO HARDWARE												16
17												SPACE, NO HARDWARE			X	SPACE, NO HARDWARE												18
19												SPACE W/H	X			SPACE W/H												20
21												SPACE W/H		X		SPACE W/H												22
23												SPACE			X	SPACE												24

Notes:

NEC 220.51	100%	EST DEMAND LOAD HVAC (KVA):	0.0
NEC 220.42 for All others	100%	EST DEMAND LOAD LGTS (KVA):	1.3
NEC 220.44 (0-10KVA@100%, X>10KVA@50%		EST DEMAND LOAD RECP (KVA):	0.0
NEC 220.14	100%	EST DEMAND LOAD GEN (KVA):	0.0
		TOTAL ESTIMATED DEMAND LOAD (KVA):	1.3

PHASE A CONNECTED LOAD (KVA):	0.4
PHASE B CONNECTED LOAD (KVA):	0.4
PHASE C CONNECTED LOAD (KVA):	0.4
TOTAL CONNECTED LOAD (KVA):	**1.3**
TOTAL CONNECTED LOAD (AMPS):	**3.5**

120/208□ VOLTS — 3 PHASE
SURFACE MOUNT — 4 WIRE
225 AMP BUS — 200 MCB (BOTTOM)

PANEL 28FLB

GE NLAB

LOCATION: TOWER F - RM 28F2 VAB
FED FROM: 32FPA CKT 9
ENCLOSURE: NEMA 1

CKT	TRIP	PHASE	NEUTRAL	GND	COND	DEMAND HVAC	DEMAND LGTS	DEMAND RECP	DEMAND GEN	KVA	NOTES	LOAD	A	B	C	LOAD	NOTES	KVA	DEMAND HVAC	DEMAND LGTS	DEMAND RECP	DEMAND GEN	COND	GND	NEUTRAL	PHASE	TRIP	CKT
1	20	#12	#12	#12	1/2"		X					LTG-RM 28F1, 2, 3, 4	X			LTG-CATWALK BAY 3				X			3/4"	#12	#12	#12	20	2
3	20	#12	#12	#12	1/2"				X			RECPT-DRINKING FOUNTAIN		X		RECPT-CATWALK ABY 3					X		3/4"	#12	#12	#12	20	4
5	20	#12	#12	#12	1/2"		X					RECPT-RM 28F1 AND 28F4			X	RECPT-CATWALK ABY 3					X		3/4"	#12	#12	#12	20	6
7	20	#12	#12	#12	1/2"				X			RECPT-VENDING	X			RECPT-CLEANING FL 27					X		3/4"	#12	#12	#12	20	8
9	20	#12	#12	#12	1/2"				X			RECPT-VENDING		X		RECPT-VENDING					X	X	1/2"	#12	#12	#12	20	10
11	20	#10	#10	#12	3/4"		X					RECPT-CLEANING LOBBY 120V			X	ELEV PLAT LVL 27, 28 & 29		0.4		X			3/4"	#10	#10	#10	20	12
13	20	#10		#12	3/4"		X					RECPT-CLEANING LOBBY 208V	X			WATER HEATER 28F1						X	3/4"	#12		#12	20	14
15		#10					X							X								X				#12		16
17	20	#12	#12	#12	1/2"				X			EXHAUST FAN MENS RM			X	SPARE											20	18

Notes:

NEC 220.51	100%	EST DEMAND LOAD HVAC (KVA):	0.0
NEC 220.42 for All others	100%	EST DEMAND LOAD LGTS (KVA):	0.4
NEC 220.44 (0-10KVA@100%, X>10KVA@50%		EST DEMAND LOAD RECP (KVA):	0.0
NEC 220.14	100%	EST DEMAND LOAD GEN (KVA):	0.0
		TOTAL ESTIMATED DEMAND LOAD (KVA):	0.4

PHASE A CONNECTED LOAD (KVA):	0.0
PHASE B CONNECTED LOAD (KVA):	0.0
PHASE C CONNECTED LOAD (KVA):	0.4
TOTAL CONNECTED LOAD (KVA):	**0.4**
TOTAL CONNECTED LOAD (AMPS):	**1.2**

120/208□ VOLTS — 3 PHASE
SURFACE MOUNT — 4 WIRE
225 AMP BUS — 200 MCB (BOTTOM)

PANEL 10FLB

GE NLAB

LOCATION: TOWER F - RM 10F1 VAB
FED FROM: 10FPA CKT 9
ENCLOSURE: NEMA 1

CKT	TRIP	PHASE	NEUTRAL	GND	COND	DEMAND HVAC	DEMAND LGTS	DEMAND RECP	DEMAND GEN	KVA	NOTES	LOAD	A	B	C	LOAD	NOTES	KVA	DEMAND HVAC	DEMAND LGTS	DEMAND RECP	DEMAND GEN	COND	GND	NEUTRAL	PHASE	TRIP	CKT
1	20	#12	#12	#12	3/4"			X				LTG-FL 9, RECPT, AC RM	X			LTG-RM 10F1,2,3,4, CATWALK, UTIL				X			3/4"	#12	#12	#12	20	2
3	20	#12	#12	#12	3/4"			X				RECPT-RM 10F1		X		RECPT-BAY 3 FL 9					X		3/4"	#12	#12	#12	20	4
5	20	#12	#12	#12	3/4"				X			WATER COOLER			X	RECPT-CATWALK BAY 3					X		3/4"	#12	#12	#12	20	6
7	20	#12	#12	#12	3/4"			X				RECPT-AC RM, FAN RM	X			EXH FAN, AC RM, MENS RM						X	3/4"	#12	#12	#12	20	8
9	20	#12	#12	#12	3/4"				X			LTG-FL 9		X		RECPT-CLEAN RM, FL 9 AND 10					X		3/4"	#12	#12	#12	20	10
11	20	#12	#12	#12	3/4"			X				RECPT-FL 9			X	RECPT-CLEAN RM, FL 9 AND 10					X		3/4"	#12		#12	20	12
13	20	#12	#12	#12	3/4"				X			FIRE ALARM RELAYS, SE AREA	X								X			#12		#12		14
15	20	#12	#12	#12	3/4"				X			LTG-AC RM, FAN RM		X		ELEV PLAT LVL 6, 7 & 8	1	0.4		X			3/4"	#10	#10	#10	20	16
17	20											SPARE			X	ELEV PLAT LVL 9, 10 & 11	1	0.4		X			3/4"	#10	#10	#10	20	18
19												SPACE	X			SPACE												20
21												SPACE		X		SPACE												22
23												SPACE			X	SPACE												24

Notes:

NEC 220.51	100%	EST DEMAND LOAD HVAC (KVA):	0.0
NEC 220.42 for All others	100%	EST DEMAND LOAD LGTS (KVA):	0.8
NEC 220.44 (0-10KVA@100%, X>10KVA@50%		EST DEMAND LOAD RECP (KVA):	0.0
NEC 220.14	100%	EST DEMAND LOAD GEN (KVA):	0.0
		TOTAL ESTIMATED DEMAND LOAD (KVA):	0.8

PHASE A CONNECTED LOAD (KVA):	0.4
PHASE B CONNECTED LOAD (KVA):	0.4
PHASE C CONNECTED LOAD (KVA):	0.4
TOTAL CONNECTED LOAD (KVA):	**0.8**
TOTAL CONNECTED LOAD (AMPS):	**2.3**

120/208□ VOLTS — 3 PHASE
SURFACE MOUNT — 4 WIRE
225 AMP BUS — 200 MCB (BOTTOM)

PANEL 25FLB

GE NLAB

LOCATION: TOWER F - RM 25F3 VAB
FED FROM: 32FPA CKT 9
ENCLOSURE: NEMA 1

CKT	TRIP	PHASE	NEUTRAL	GND	COND	DEMAND HVAC	DEMAND LGTS	DEMAND RECP	DEMAND GEN	KVA	NOTES	LOAD	A	B	C	LOAD	NOTES	KVA	DEMAND HVAC	DEMAND LGTS	DEMAND RECP	DEMAND GEN	COND	GND	NEUTRAL	PHASE	TRIP	CKT
1	20	#12	#12	#12	1/2"		X					LTG-RM 25F1, F2, F3	X			LTG-CATWALK, NO. 18				X			3/4"	#12	#12	#12	20	2
3	20	#12	#12	#12	1/2"			X				RECPT-RM 25F3		X		RECPT-CATWALK, NO. 18					X		3/4"	#12	#12	#12	20	4
5	20	#12	#12	#12	3/4"				X			RECPT-VENDING			X	RECPT-MOVABLE PLATFORM					X		3/4"	#12	#12	#12	20	6
7	20	#12	#12	#12	3/4"				X			RECPT-VENDING	X			RECPT-RM 25F3					X		3/4"	#12	#12	#12	20	8
9	20	#12	#12	#12	3/4"				X			RECPT-WATER COOLER, VENDING		X		RECPT-RM 25F5					X		3/4"	#12	#12	#12	20	10
11	20	#12	#12	#12	1/2"							RECPT-RM 25F4			X	RECPT-CLOCK						X	1/2"	#12	#12	#12	20	12
13	20	#12	#12	#12	3/4"				X			RECPT-VENDING	X			ELEV PLAT LVL 21, 22 & 23		0.4		X			3/4"	#10	#10	#10	20	14
15	20	#12	#12	#12	3/4"				X			RECPT-TELEPHONE CABINET		X		ELEV PLAT LVL 24, 25 & 26		0.4		X			3/4"	#10	#10	#10	20	16
17	20	#12	#12	#12	3/4"				X			RECPT-VENDING			X	SPARE											20	18
19	20	#12	#12	#12	3/4"				X			EXHAUST FANS IN RESTROOMS	X			RECPT-CLEANING (120V)					X		3/4"	#12	#12	#12	20	20
21	20											SPARE		X		RECPT-CLEANING (208V)					X		3/4"	#12		#12	20	22
23	20											SPARE			X						X					#12		24

Notes:

NEC 220.51	100%	EST DEMAND LOAD HVAC (KVA):	0.0
NEC 220.42 for All others	100%	EST DEMAND LOAD LGTS (KVA):	0.8
NEC 220.44 (0-10KVA@100%, X>10KVA@50%		EST DEMAND LOAD RECP (KVA):	0.0
NEC 220.14	100%	EST DEMAND LOAD GEN (KVA):	0.0
		TOTAL ESTIMATED DEMAND LOAD (KVA):	0.8

PHASE A CONNECTED LOAD (KVA):	0.4
PHASE B CONNECTED LOAD (KVA):	0.4
PHASE C CONNECTED LOAD (KVA):	0.0
TOTAL CONNECTED LOAD (KVA):	**0.8**
TOTAL CONNECTED LOAD (AMPS):	**2.3**

120/208□ VOLTS — 3 PHASE
SURFACE MOUNT — 4 WIRE
225 AMP BUS — 200 MCB (BOTTOM)

PANEL 32FLB

LOCATION: TOWER F - RM 32F2 VAB
FED FROM: 32FPA CKT 9
ENCLOSURE: NEMA 1

CKT	TRIP	PHASE	NEUTRAL	GND	COND	DEMAND HVAC	DEMAND LGTS	DEMAND RECP	DEMAND GEN	KVA	NOTES	LOAD	A	B	C	LOAD	NOTES	KVA	DEMAND HVAC	DEMAND LGTS	DEMAND RECP	DEMAND GEN	COND	GND	NEUTRAL	PHASE	TRIP	CKT
1	20	#12	#12	#12	1/2"		X					LTG-RM 28FL AND UTIL SHAFT	X			ELEV PLAT LVL 30, 31 & 32		0.4		X			3/4"	#10	#10	#10	20	2
3	20	#12	#12	#12	1/2"				X			RECPT-RM 32F1		X		RECPT-CLEANING, 120V						X	3/4"	#12	#10	#10	20	4
5	20	#12	#12	#12	3/4"							LTG-CATWALK, 31F1			X	RECPT-CLEANING, 208V						X				#10		6
7	20	#12	#12	#12	3/4"							RECPT-CATWALK, 31F1	X									X	3/4"	#12	#10	#10	20	8
9	20	#12	#12	#12	3/4"							RECPT-MOVABLE PLATFORM		X		ELEV PLAT LVL 33 & 34		0.4		X			3/4"	#10	#10	#10	20	10
11	20											SPARE			X	SPARE											20	12
13												SPACE	X			SPACE												14
15												SPACE		X		SPACE												16
17												SPACE			X	SPACE												18
19												SPACE	X			SPACE												20
21												SPACE		X		SPACE												22
23												SPACE			X	SPACE												24
25												SPACE	X			SPACE												26
27												SPACE		X		SPACE												28
29												SPACE			X	SPACE												30
31												SPACE	X			SPACE												32
33												SPACE		X		SPACE												34
35												SPACE			X	SPACE												36
37												SPACE	X			SPACE												38
39												SPACE		X		SPACE												40
41												SPACE			X	SPACE												42

Notes:

NEC 220.51	100%	EST DEMAND LOAD HVAC (KVA):	0.0
NEC 220.42 for All others	100%	EST DEMAND LOAD LGTS (KVA):	0.8
NEC 220.44 (0-10KVA@100%, X>10KVA@50%		EST DEMAND LOAD RECP (KVA):	0.0
NEC 220.14	100%	EST DEMAND LOAD GEN (KVA):	0.0
		TOTAL ESTIMATED DEMAND LOAD (KVA):	0.8

PHASE A CONNECTED LOAD (KVA):	0.4
PHASE B CONNECTED LOAD (KVA):	0.4
PHASE C CONNECTED LOAD (KVA):	0.0
TOTAL CONNECTED LOAD (KVA):	**0.8**
TOTAL CONNECTED LOAD (AMPS):	**2.3**

SPECIFIC NOTES:

A. ALL PANELS THIS SHEET ARE EXISTING. FOR LOADS BEING MODIFIED UNDER THIS EFFORT, REFER TO KVA COLUMNS IN SCHEDULES FOR INDICATION OF NEW WORK. ALL LOADS WITH KVA SHOW, REQUIRES THE INSTALLATION OF NEW BREAKERS, CONDUIT AND WIRING AS INDICATED.

PANEL INDEX	
32ELB	10FLB
16FLB	25FLB
28FLB	32FLB

WHEN PRINTED FULL SIZE, THIS SHEET IS 34"X44"
THIS COMPUTER DRAWING WAS CREATED IN AUTOCAD AND FILED UNDER THE DRAWING NUMBER

E-671

SYM	ZONE	DESCRIPTION	DATE	APPROVAL
		REVISIONS		

RS+H IMPROVING YOUR WORLD
Reynolds, Smith and Hills, Inc.
115 Alma Blvd, Suite 101
Merritt Island, Florida 32953-4101
(321) 453-0212 (321) 453-0223 FAX
www.rsandh.com

SIGNATURES		DATE
DRAWN:	JOSEPH HAUER	08-20-2013
CHECKED:	DANIEL VICEANT	08-20-2013
SUBMITTED: ARCHENG OF RECORD	KEVIN HARRIS	08-20-2013
ST OF LICENSURE: FL LICENSE NO: 68533		
APPROVED:	JOHN KERCSMAR FOR	8.20.13
	MIKE HARTNETT	11/5/13

NATIONAL AERONAUTICS AND SPACE ADMINISTRATION
JOHN F. KENNEDY SPACE CENTER, NASA
KENNEDY SPACE CENTER, FLORIDA

LAUNCH COMPLEX 39
VEHICLE ASSEMBLY BUILDING

MODIFY VEHICLE ASSEMBLY BUILDING HIGH BAY 3 FOR SLS – ELEVATOR LANDINGS PANEL SCHEDULES – SHEET 2

FILE NO. 302-6058-043 | SIZE E | DWG. NO. 79K39665 | REV
PROJ. NO. PCN 99000.5 | SHEET 35 OF 35