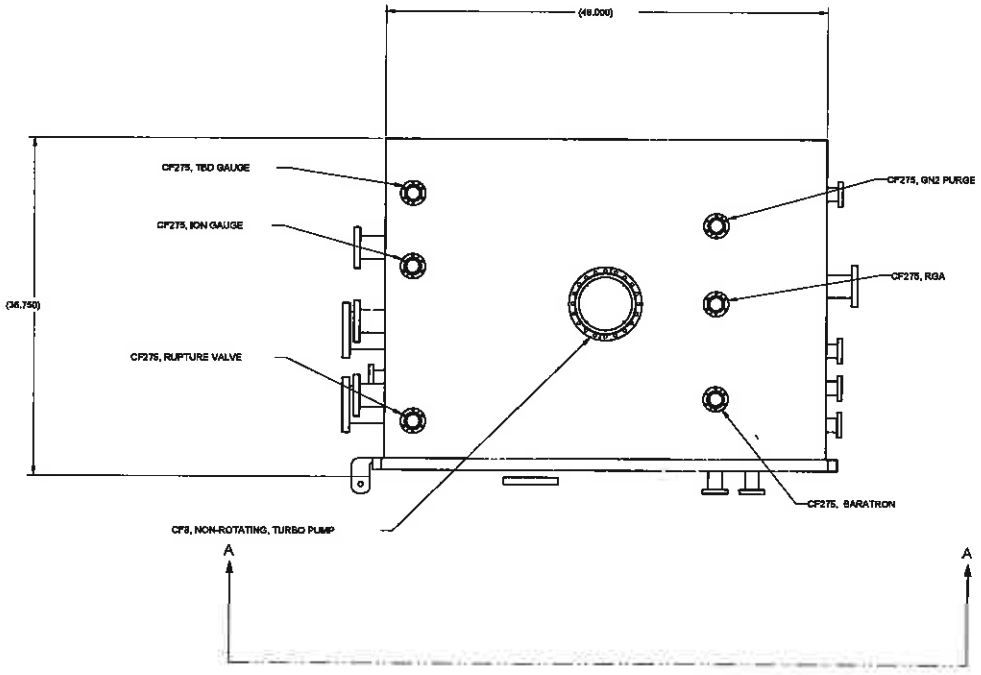

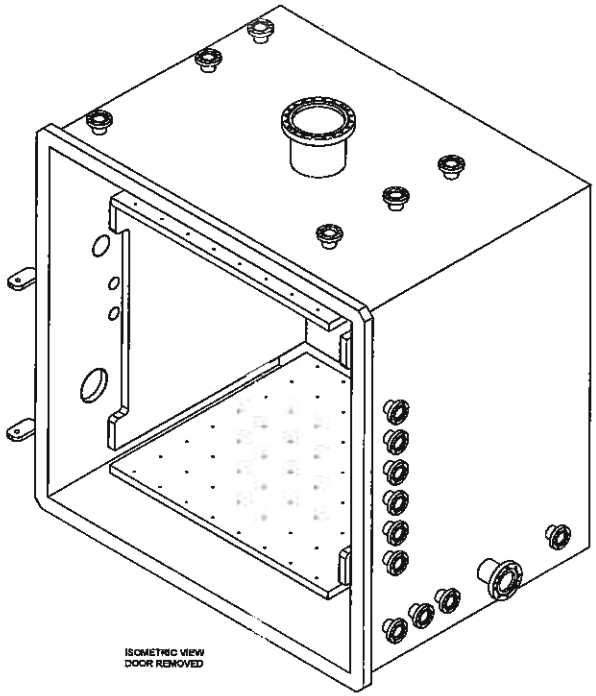

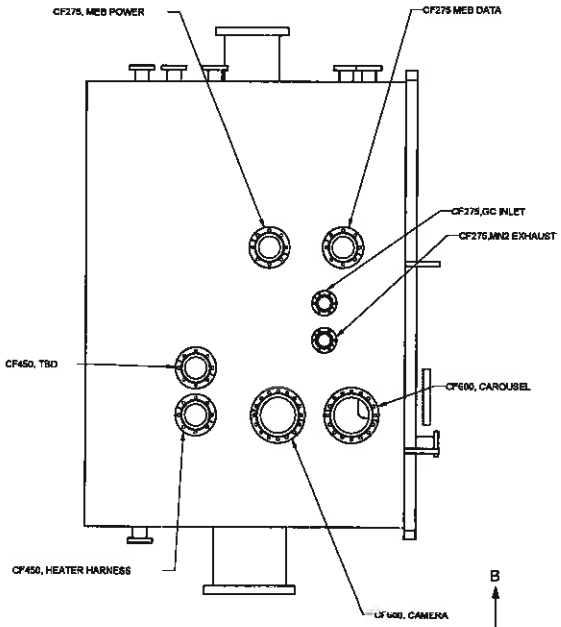

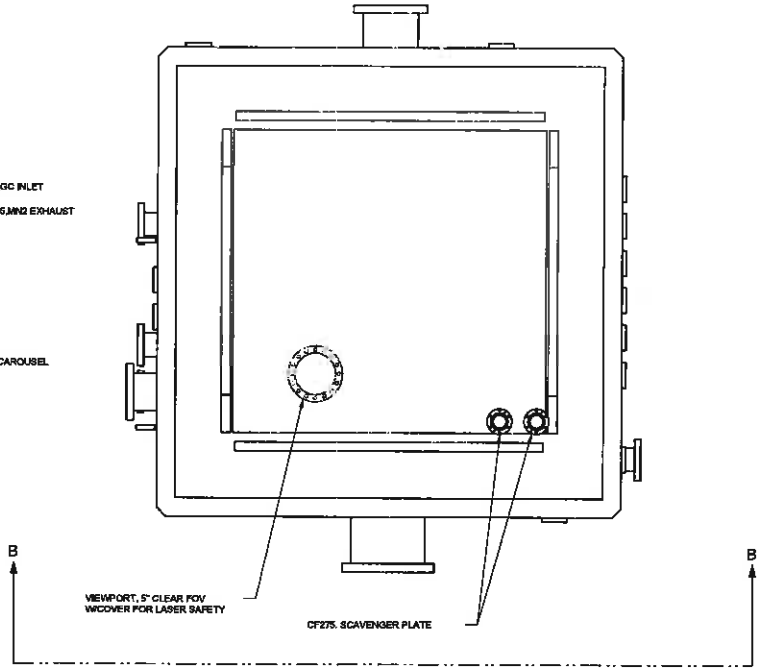

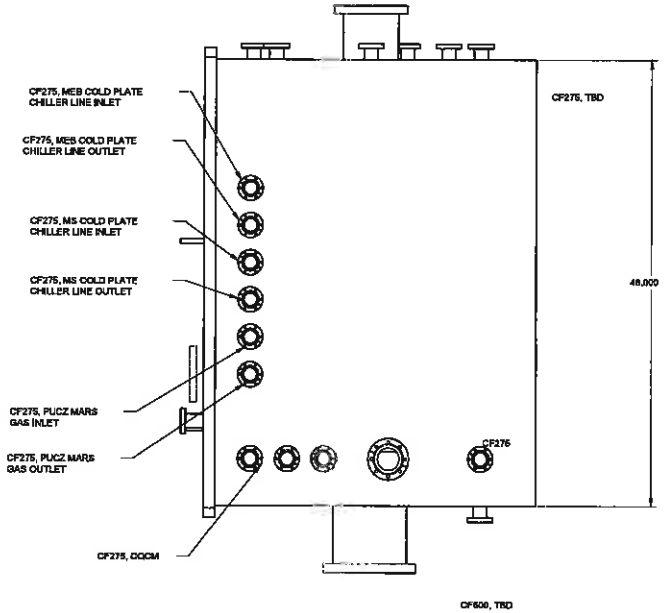

MOMA SKETCH 001
07-06-2013
PAGE 1

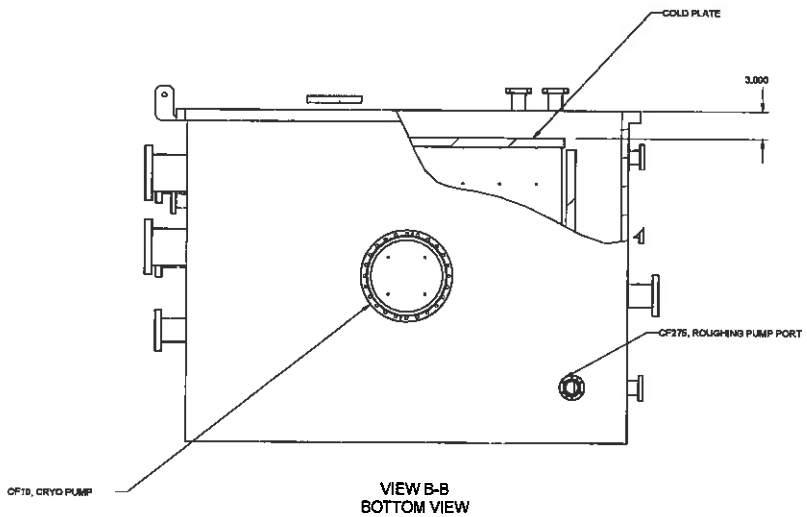

VIEW B-B
BOTTOM VIEW

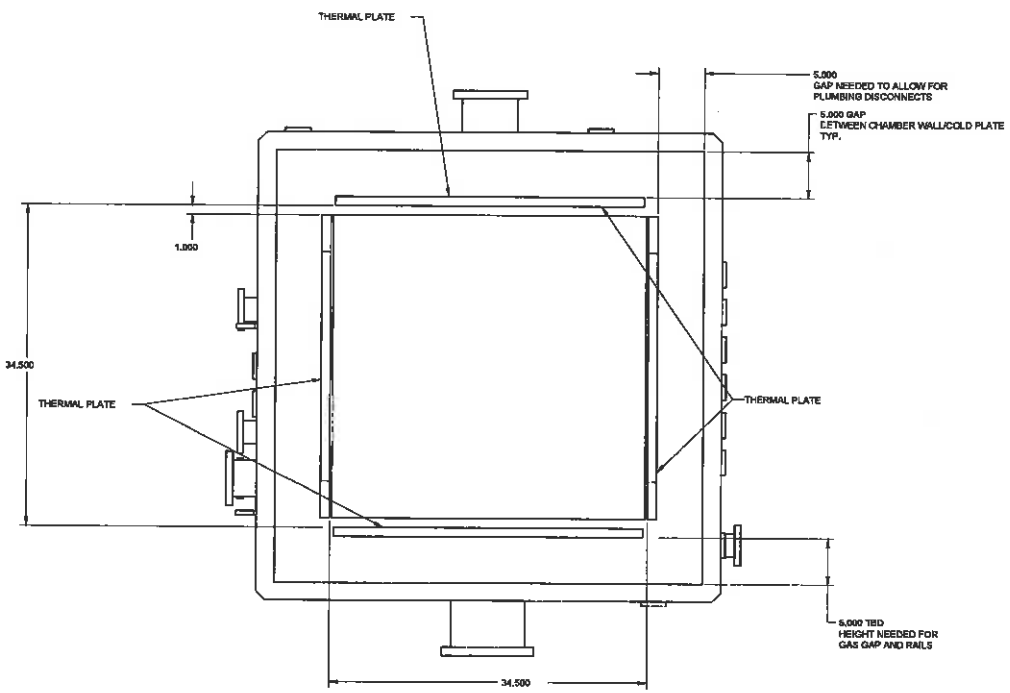

VIEW A-A
DOOR REMOVED FOR CLARITY

MOMA SKETCH 001
07-06-2013
PAGE 2

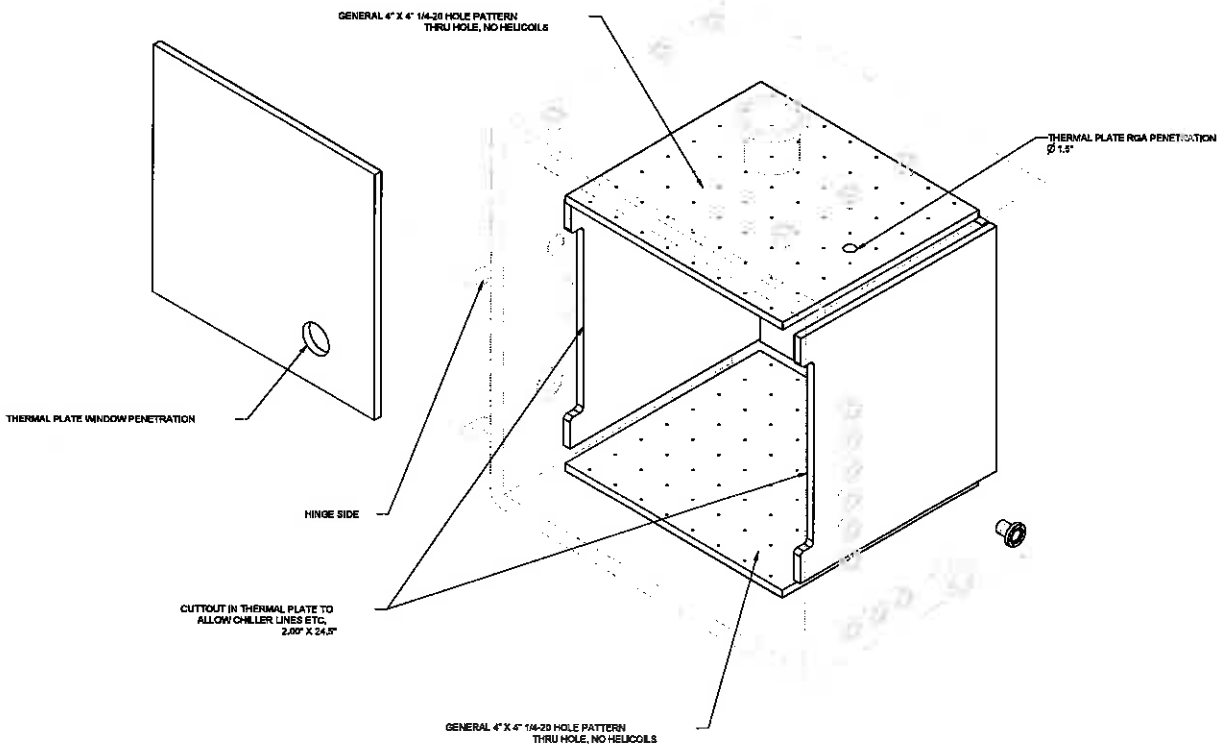

MOMA SKETCH 001
07-06-2013
PAGE 3

SIDE VIEW

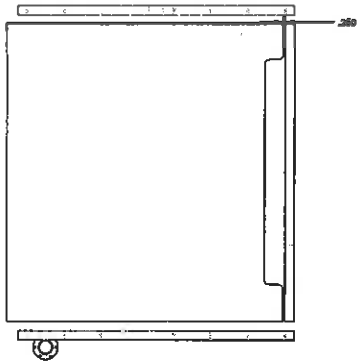

FRONT VIEW

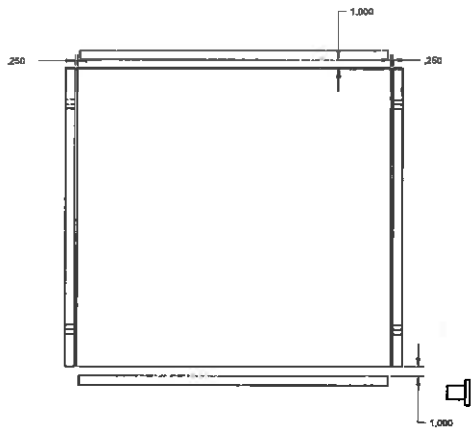

TOP THERMAL PLATE

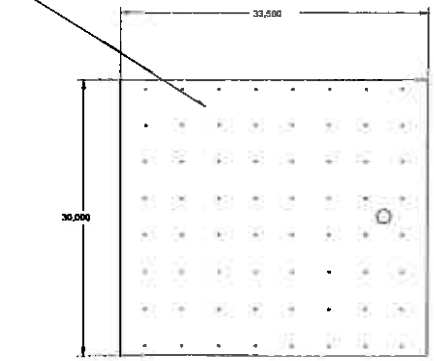

REFER TO ATTATCHED MECHANICAL AND THERMAL SPECIFICATION FOR THERMAL PLATE THICKNESS

TOP AND BOTTOM THERMAL PLATE TO HAVE IDENTIAL HEIGHT AND WIDTH DIMENSIONS

SIDE THERMAL PLATES TO BE SAME HEIGHT AND WIDTH DIMENSIONS

SIDE THERMAL PLATE

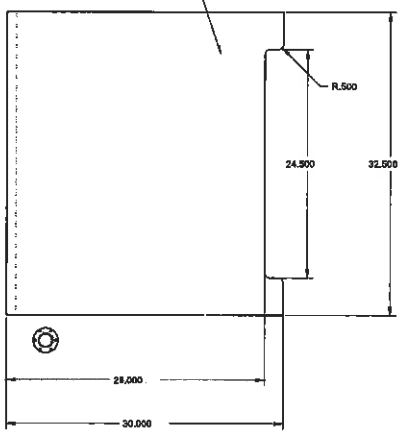

FRONT THERMAL PLATE
OPEN DOOR VIEW

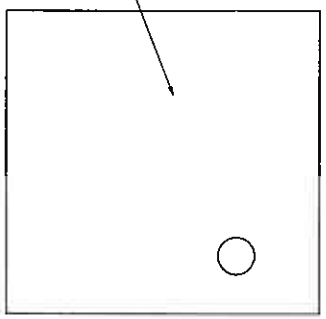

FRONT AND BACK THERMAL PLATES TO HAVE IDENTIAL HEIGHT WIDTH DIMENSION

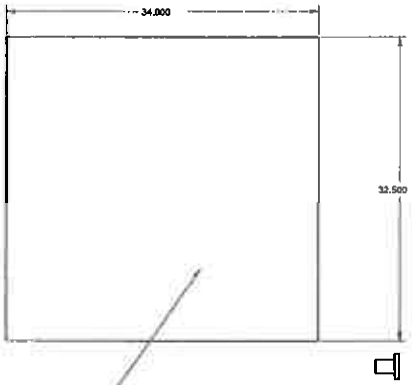

BACK THERMAL PLATE

MOMA SKETCH 001
07-08-2013
PAGE 4