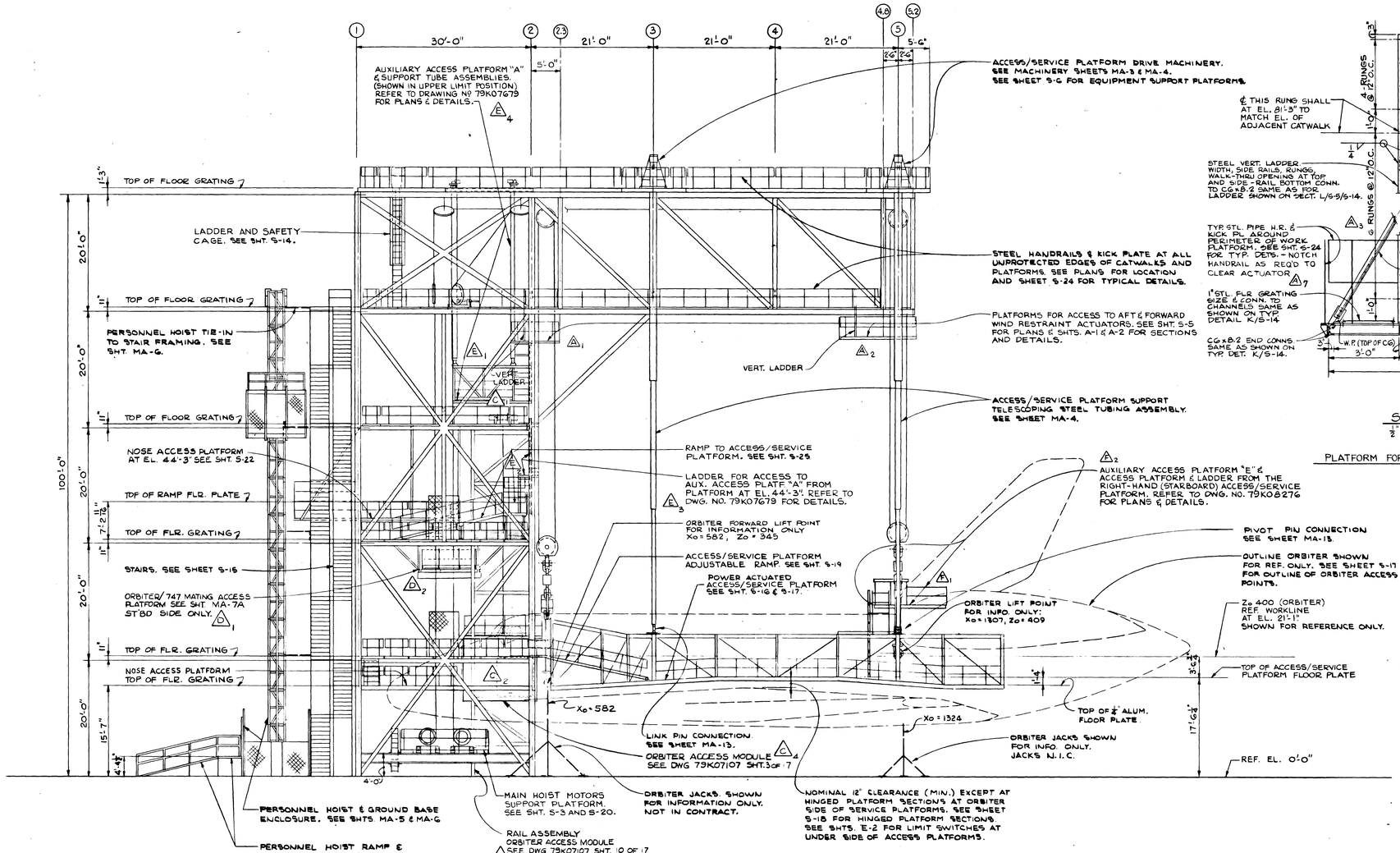

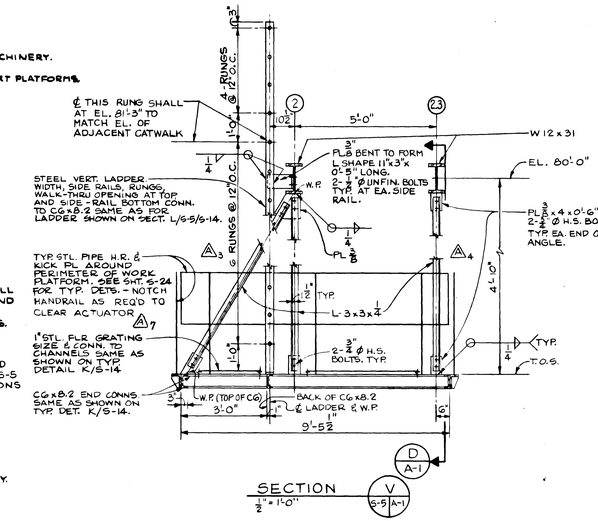

PLATFORM FOR ACCESS TO FORWARD WIND RESTRAINT ACTUATOR

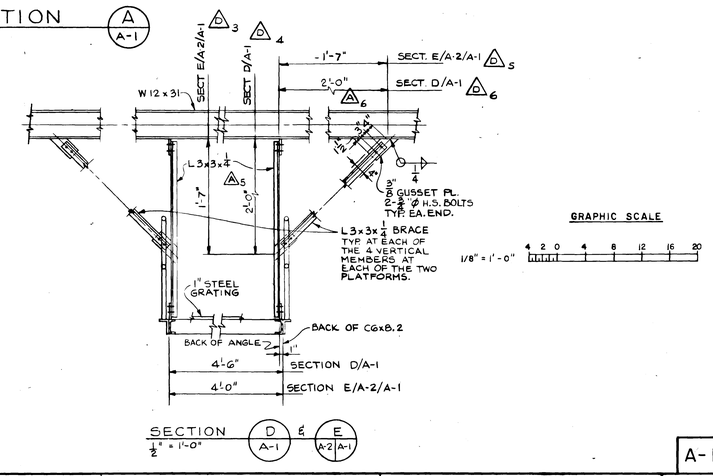

AUXILIARY ACCESS PLATFORM "E" & ACCESS PLATFORM & LADDER FROM THE RIGHT-HAND (STARBOARD) ACCESS/SERVICE PLATFORM. REFER TO DWG. NO. 79K08276 FOR PLANS & DETAILS.

PIVOT PIN CONNECTION SEE SHEET MA-13.

OUTLINE ORBITER SHOWN FOR REF. ONLY. SEE SHEET S-17 FOR OUTLINE OF ORBITER ACCESS POINTS.

Zo 400 (ORBITER) REF. WORKLINE AT EL. 21'-1" SHOWN FOR REFERENCE ONLY.

TOP OF ACCESS/SERVICE PLATFORM FLOOR PLATE

NOTE: ALL ELEVATIONS INDICATED REFER TO TOP OF COL. CONC. PEDESTAL AS REFERENCE EL. 0'-0".

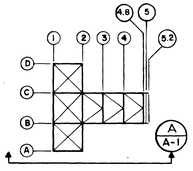

KEY PLAN
NO SCALE

GRAPHIC SCALE
1/8" = 1'-0"

SYM.	ZONE		DATE	APPROVED
△2	D4, E3	AUX. ACCESS PLATFORM "E" ADDED	9-27-76	WHB
△4	E5-D5, E6-D6	AUX. ACCESS PLATFORM "A" ADDED	7-27-76	WHB
△6	E6-E7, C5-C6	ROLLING PLATFORM & MISC. REVISIONS	5-13-76	WHB
△4	C5-D5, E5-D5	ORBITER ACCESS MODULE ADDED.	5-6-76	WHB
△7	D-4, G-2, F-4 & F-6	PLATFORM LEVEL REV. FOR ADD'L. CLEARANCE	8-7-75	WHB

REVISIONS

CONNELL ASSOCIATES, INC.
ARCHITECTS / ENGINEERS / PLANNERS
CORAL GABLES, FLORIDA

SIGNATURES	DATE
DESIGNED	7-18-75
DRAWN	7-18-75
CHECKED	7-18-75
SUBMITTED	7-18-75
APPROVED	7-22-75
APPROVED	
APPROVED	
APPROVED	
APPROVED	
APPROVED	8-24-76

NATIONAL AERONAUTICS AND SPACE ADMINISTRATION
JOHN F. KENNEDY SPACE CENTER, NASA
KENNEDY SPACE CENTER, FLORIDA

NASA FLIGHT RESEARCH CENTER
EDWARDS AIR FORCE BASE CALIFORNIA

ORBITER MATING DEVICE

ARCHITECTURAL ELEVATION ORBITER POSITIONED ON JACKS

FILE NO. | SIZE F | DWG. NO. 79K05459 | REV.
PROJ. NO. PCN 77211 | SHEET 2 OF 63

A-1

Orbiter Mating Device Arch. Elevation Orbiter Positioned on Jacks

79K05459 SHT. 2 of 63

ASC FORM (P) 1-11A (REV. 1-68)

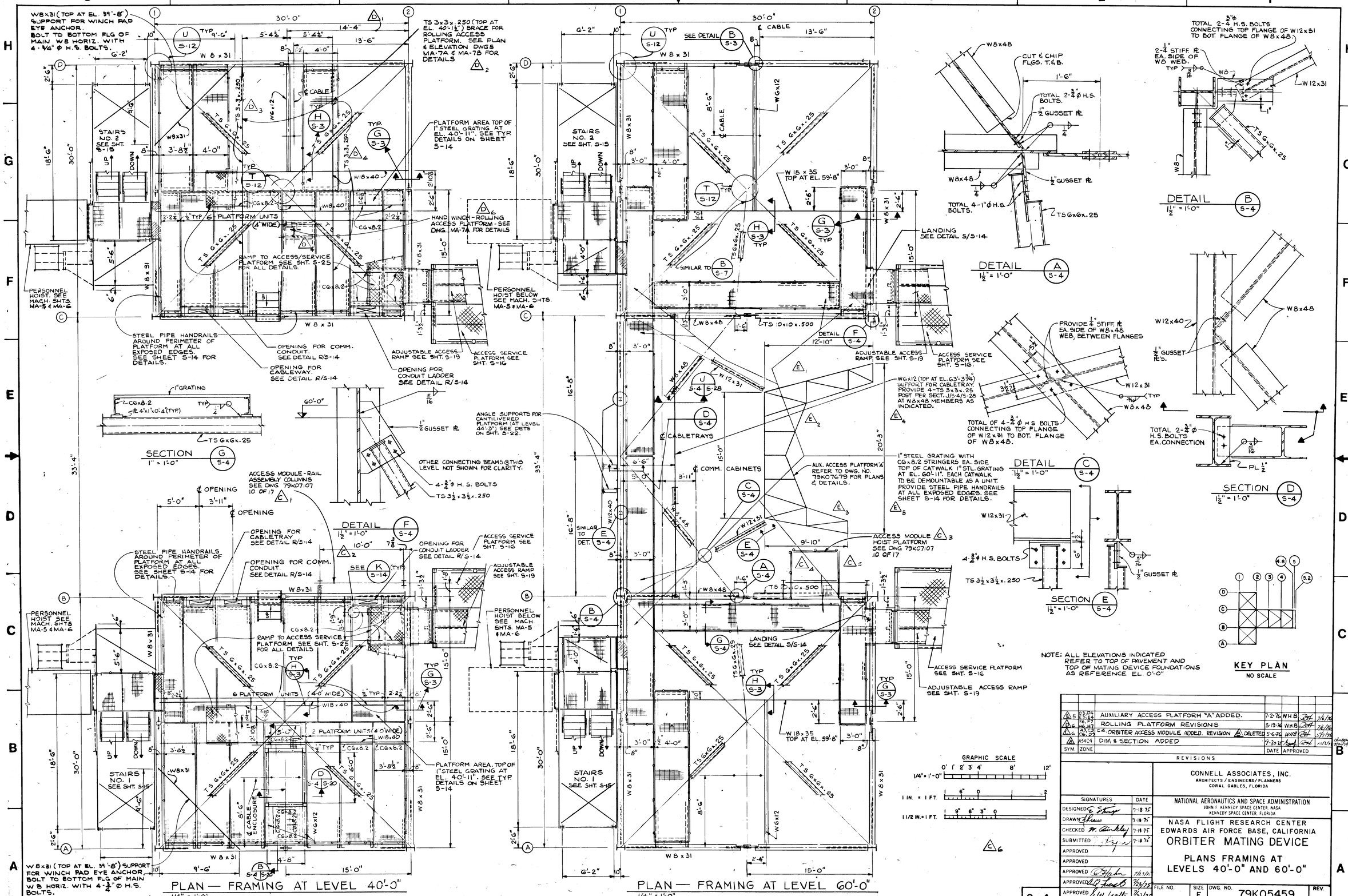

SYM.	ZONE			DATE	APPROVED
5	D3-D4 E3-E4 F4-F7	AUXILIARY ACCESS PLATFORM "A" ADDED.	7-2-76	W.H.B.	7/6/76
6	H6-H7 A3-C3 C6-D3	ROLLING PLATFORM REVISIONS	5-19-76	W.H.B.	7/6/76
4	C4	ORBITER ACCESS MODULE ADDED. REVISION 3 DELETED	5-6-76	W.H.B.	5/7/76
3	A3&C4	DIM. & SECTION ADDED	9-30-75		11/17/75

REVISIONS

CONNELL ASSOCIATES, INC.
ARCHITECTS / ENGINEERS / PLANNERS
CORAL GABLES, FLORIDA

NATIONAL AERONAUTICS AND SPACE ADMINISTRATION
JOHN F. KENNEDY SPACE CENTER, NASA
KENNEDY SPACE CENTER, FLORIDA

NASA FLIGHT RESEARCH CENTER
EDWARDS AIR FORCE BASE, CALIFORNIA

ORBITER MATING DEVICE

PLANS FRAMING AT LEVELS 40'-0" AND 60'-0"

SIGNATURES	DATE
DESIGNED	7-18-75
DRAWN	7-18-75
CHECKED	7-18-75
SUBMITTED	7-18-75
APPROVED	
APPROVED	
APPROVED	7/23/75
APPROVED	7/23/75
APPROVED	7/23/75
APPROVED	7-24-75

S-4

FILE NO.	SIZE	DWG. NO.	REV.
	F	79K05459	
PROJ. NO. PCN 77211		SHEET 10 OF 63	

Orbiter Mating Device Plans Framing @ Levels 40'-0" and 60'-0"

79K05459 SHT 10 of 63

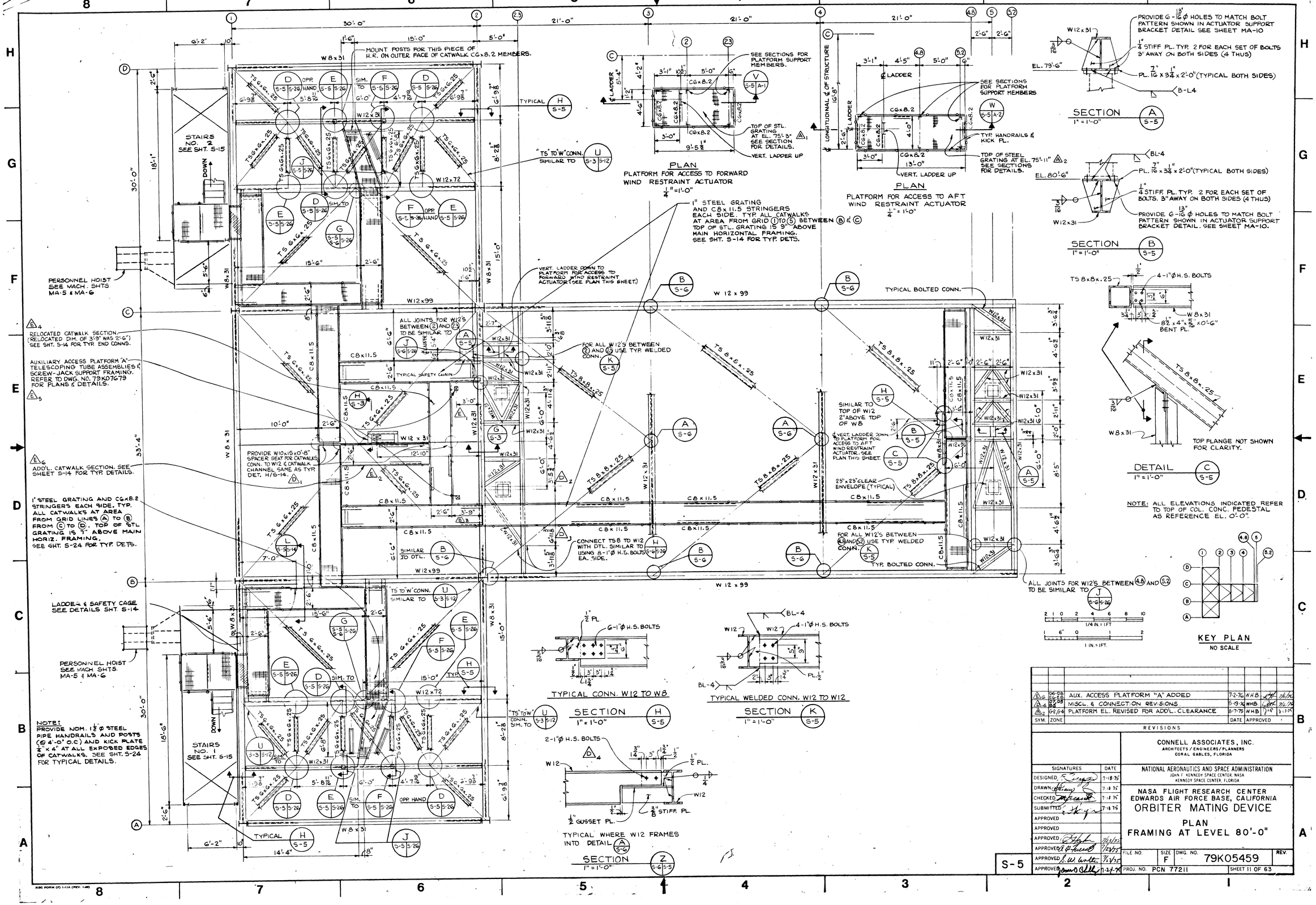

SYM.	ZONE	REVISIONS	DATE	APPROVED
△6	D6-D8 E6-E8	AUX. ACCESS PLATFORM "A" ADDED	7-2-76	WHB
△4	D7-D8 B6	MISCL. & CONNECTION REVISIONS	5-19-76	WHB
△2	G-2, G-4	PLATFORM EL. REVISED FOR ADD'L. CLEARANCE	8-7-75	WHB

CONNELL ASSOCIATES, INC.
ARCHITECTS / ENGINEERS / PLANNERS
CORAL GABLES, FLORIDA

SIGNATURES	DATE
DESIGNED	7-18-75
DRAWN	7-18-75
CHECKED	7-18-75
SUBMITTED	7-18-75
APPROVED	
APPROVED	
APPROVED	7/23/75
APPROVED	7/23/75
APPROVED	7/23/75
APPROVED	7-27-76

NATIONAL AERONAUTICS AND SPACE ADMINISTRATION
JOHN F. KENNEDY SPACE CENTER, NASA
KENNEDY SPACE CENTER, FLORIDA

NASA FLIGHT RESEARCH CENTER
EDWARDS AIR FORCE BASE, CALIFORNIA

ORBITER MATING DEVICE

PLAN
FRAMING AT LEVEL 80'-0"

FILE NO.	SIZE	DWG. NO.	REV.
	F	79K05459	
PROJ. NO. PCN 77211		SHEET 11 OF 63	

S-5

Orbiter Mating Device
Plan Framing @ Level
80'-0"

79K05459
SHT. 11 of 63

KBC FORM (F) 1-11A (REV. 1-69)

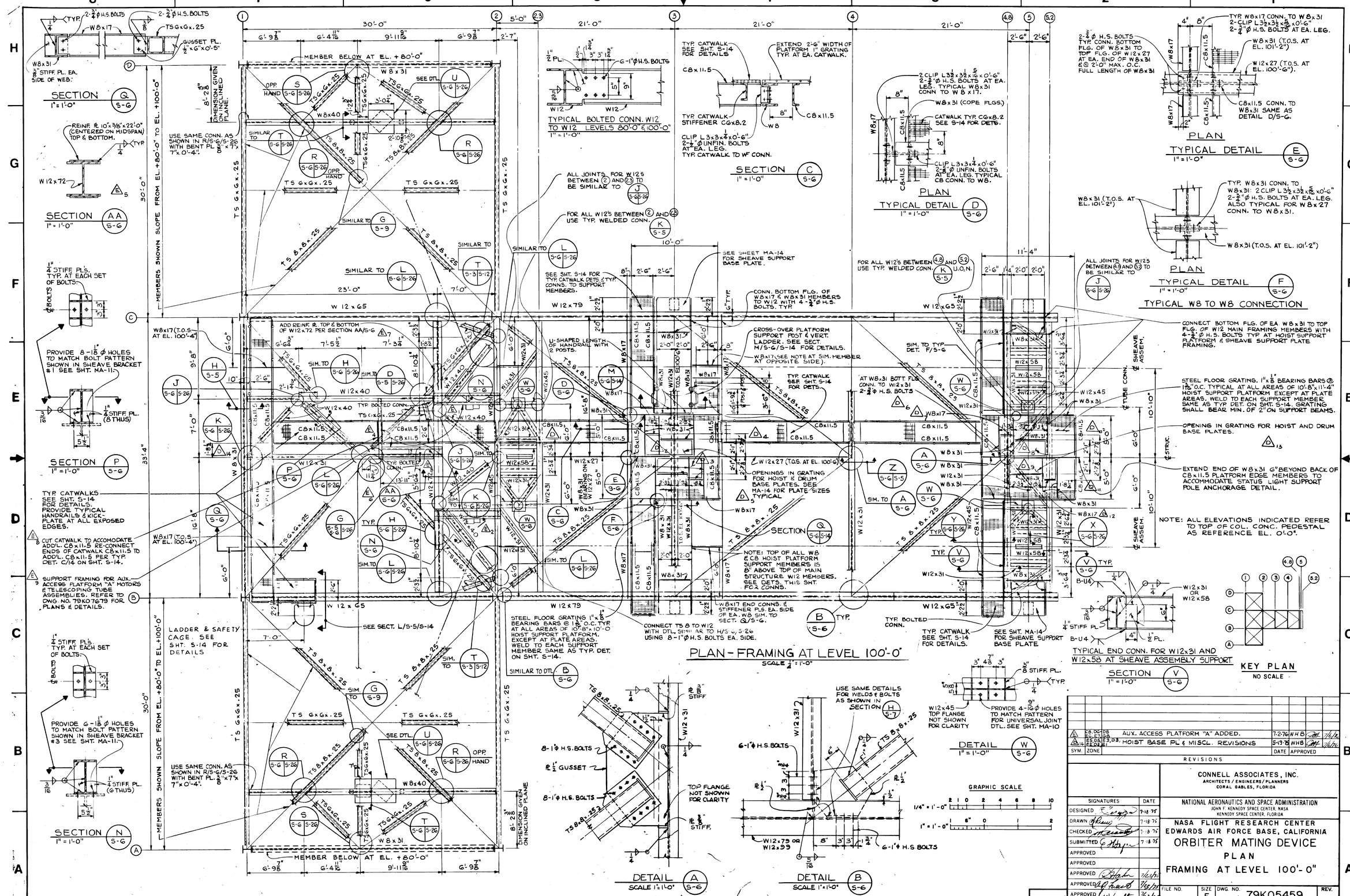
SECTION Q S-6 1"=1'-0"
SECTION AA S-6 1"=1'-0"
SECTION P S-6 1"=1'-0"
SECTION N S-6 1"=1'-0"
TYPICAL BOLTED CONN. W12 TO W12 LEVELS 80'-0" & 100'-0" 1"=1'-0"
SECTION C S-6 1"=1'-0"
PLAN
TYPICAL DETAIL D S-6 1"=1'-0"
TYPICAL DETAIL E S-6 1"=1'-0"
TYPICAL DETAIL F S-6 1"=1'-0"
TYPICAL W8 TO W8 CONNECTION
PLAN-FRAMING AT LEVEL 100'-0"
SCALE 1/4"=1'-0"
DETAIL A S-6 SCALE 1"=1'-0"
DETAIL B S-6 SCALE 1"=1'-0"
DETAIL W S-6 1"=1'-0"
SECTION V S-6 1"=1'-0"
TYPICAL END CONN. FOR W12x31 AND W12x58 AT SHEAVE ASSEMBLY SUPPORT
KEY PLAN NO SCALE
GRAPHIC SCALE
MEMBER BELOW AT EL. +80'-0"
MEMBERS SHOWN SLOPE FROM EL. +80'-0" TO EL. +100'-0"
LADDER & SAFETY CAGE. SEE SHT. S-14 FOR DETAILS
NOTE: ALL ELEVATIONS INDICATED REFER TO TOP OF COL. CONC. PEDESTAL AS REFERENCE EL. 0'-0".
NOTE: TOP OF ALL W8 & C8 HOIST PLATFORM SUPPORT MEMBERS IS 8" ABOVE TOP OF MAIN STRUCTURE W12 MEMBERS. SEE DETS. THIS SHT. FOR CONNS.
STEEL FLOOR GRATING 1"x 1/8" BEARING BARS @ 1 3/16" O.C. TYP. AT ALL AREAS OF 10'-8"x 10'-0" HOIST SUPPORT PLATFORM. EXCEPT AT PLATE AREAS. WELD TO EACH SUPPORT MEMBER SAME AS TYP. DET. ON SHT. S-14.
CONNECT TS 8 TO W12 WITH DTL. SIMILAR TO H/S 4/S-26 USING 8-1"Ø H.S. BOLTS EA. SIDE.
W8x17 END CONNS. & STIFFENER PLS. EA. SIDE OF EA. W8 SIM. TO SECT. Q/S-6.
CONNECT BOTTOM FLG. OF EA W8x31 TO TOP FLG. OF W12 MAIN FRAMING MEMBERS WITH 4-3/4"Ø H.S. BOLTS TYP AT HOIST SUPPORT PLATFORM & SHEAVE SUPPORT PLATE FRAMING.
STEEL FLOOR GRATING. 1"x 1/8" BEARING BARS @ 1 3/16" O.C. TYPICAL AT ALL AREAS OF 10'-8"x 11'-4" HOIST SUPPORT PLATFORM EXCEPT AT PLATE AREAS. WELD TO EACH SUPPORT MEMBER SAME AS TYP DET. ON SHT. S-14. GRATING SHALL BEAR MIN. OF 2" ON SUPPORT BEAMS.
OPENING IN GRATING FOR HOIST AND DRUM BASE PLATES.
EXTEND END OF W8x31 6" BEYOND BACK OF C8x11.5 PLATFORM EDGE MEMBERS TO ACCOMMODATE STATUS LIGHT SUPPORT POLE ANCHORAGE DETAIL.
ALL JOINTS FOR W12'S BETWEEN ② AND ㉓ TO BE SIMILAR TO J S-6 S-26
FOR ALL W12'S BETWEEN ② AND ㉓ USE TYP. WELDED CONN. K S-5
FOR ALL W12'S BETWEEN ④.8 AND ⑤.2 USE TYP. WELDED CONN. K S-5 U.O.N.
SEE SHEET MA-14 FOR SHEAVE SUPPORT BASE PLATE.
SEE SHT. S-14 FOR TYP. CATWALK DETS. & TYP. CONNS. TO SUPPORT MEMBERS.
TYP. CATWALKS SEE SHT. S-14 FOR DETAILS. PROVIDE TYPICAL HANDRAILS & KICK-PLATE AT ALL EXPOSED EDGES.
CUT CATWALK TO ACCOMODATE ADD'L. C8x11.5 RE-CONNECT ENDS OF CATWALK C8x11.5 TO ADD'L. C8x11.5 PER TYP. DET. C/14 ON SHT. S-14.
SUPPORT FRAMING FOR AUX. ACCESS PLATFORM "A" MOTORS & TELESCOPING TUBE ASSEMBLIES. REFER TO DWG. NO. 79K07679 FOR PLANS & DETAILS.
ADD REINF. PL. TOP & BOTTOM OF W12x72 PER SECTION AA/S-6
PROVIDE 8-1 1/8" Ø HOLES TO MATCH BOLT PATTERN SHOWN IN SHEAVE BRACKET #1 SEE SHT. MA-11.
PROVIDE 6-1 1/8" Ø HOLES TO MATCH BOLT PATTERN SHOWN IN SHEAVE BRACKET #3 SEE SHT. MA-11.
USE SAME CONN. AS SHOWN IN R/S-6/S-26 WITH BENT PL. 3/8"x 7"x 7"x 0'-4".
SEE SECT. L/S-5/S-14
SEE DTL.
SIMILAR TO DTL. B S-6
SIM. TO TYP. DET. F/S-6
AT W8x31 BOTT FLG. CONN. TO W12x31 2-3/4" Ø H.S. BOLTS
TYP. CATWALK SEE SHT. S-14 FOR DETS.
TYP. BOLTED CONN.
SEE SHT. MA-14 FOR SHEAVE SUPPORT BASE PLATE
W12x45 TOP FLANGE NOT SHOWN FOR CLARITY
PROVIDE 4-1 6/8" Ø HOLES TO MATCH PATTERN FOR UNIVERSAL JOINT DTL. SEE SHT. MA-10
USE SAME DETAILS FOR WELDS & BOLTS AS SHOWN IN SECTION H S-7
6-1" Ø H.S. BOLTS
8-1" Ø H.S. BOLTS
PL 1/2" GUSSET
TOP FLANGE NOT SHOWN FOR CLARITY
W12x79 OR W12x99
AUX. ACCESS PLATFORM "A" ADDED.
HOIST BASE PL & MISCL. REVISIONS
REVISIONS
CONNELL ASSOCIATES, INC.
ARCHITECTS / ENGINEERS / PLANNERS
CORAL GABLES, FLORIDA
SIGNATURES
DATE
DESIGNED 7-18-75
DRAWN 7-18-75
CHECKED 7-18-75
SUBMITTED 7-18-75
APPROVED
NATIONAL AERONAUTICS AND SPACE ADMINISTRATION
JOHN F. KENNEDY SPACE CENTER, NASA
KENNEDY SPACE CENTER, FLORIDA
NASA FLIGHT RESEARCH CENTER
EDWARDS AIR FORCE BASE, CALIFORNIA
ORBITER MATING DEVICE
PLAN
FRAMING AT LEVEL 100'-0"
FILE NO.
SIZE F
DWG. NO. 79K05459
REV.
PROJ. NO. PCN 77211
SHEET 12 OF 63
S-6
79K05459 SHT. 12 of 63
Orbiter Mating Device Plan: Framing @ Level 100'-0"

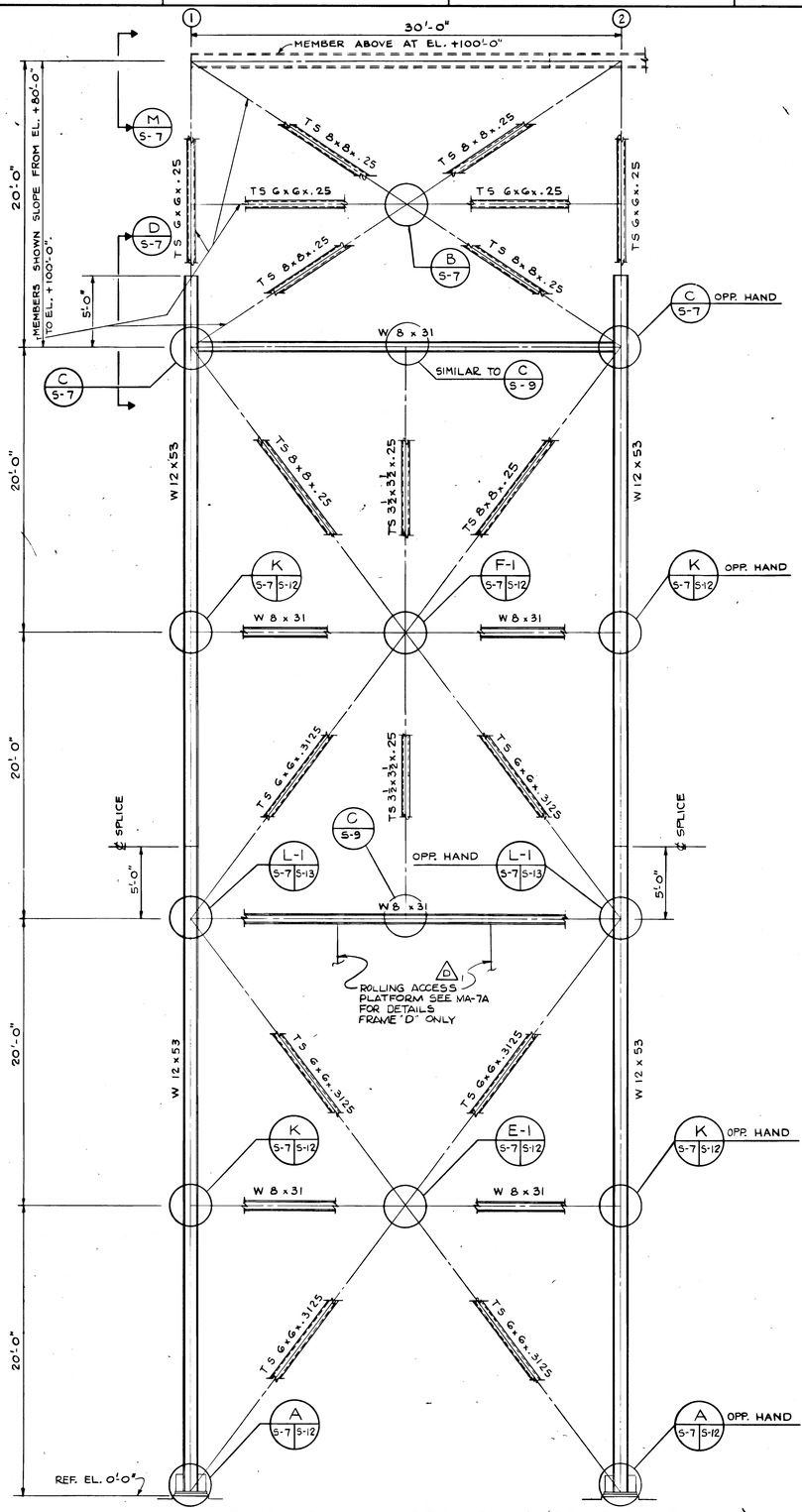

ELEVATION — FRAME A (FRAME D OPP. HAND)
1/4" = 1'-0"

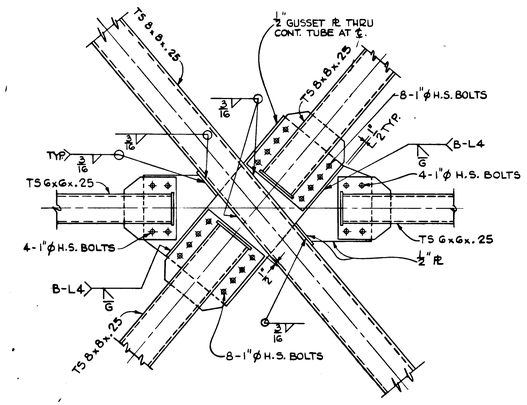

DETAIL B S-7
1" = 1'-0"

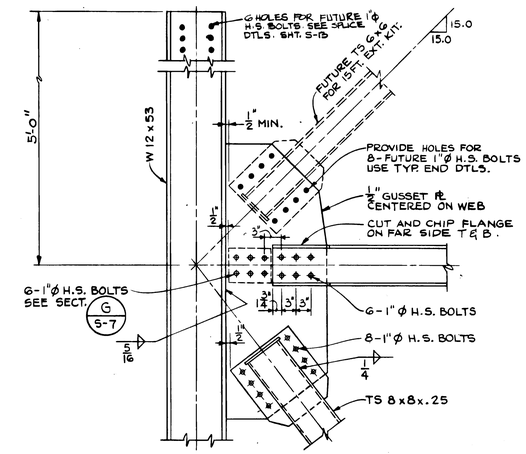

DETAIL C S-7
1" = 1'-0"

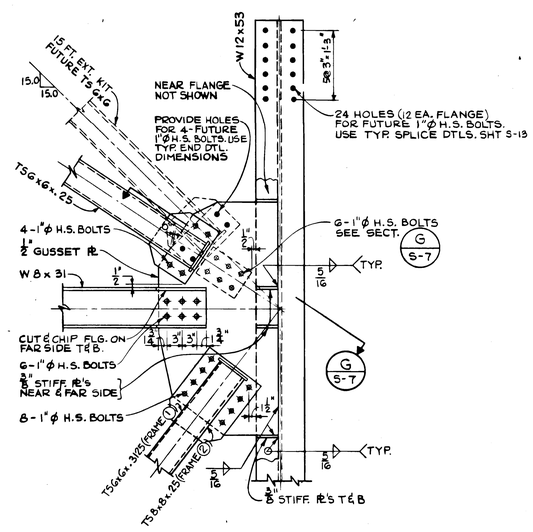

SECTION D S-7
1" = 1'-0"

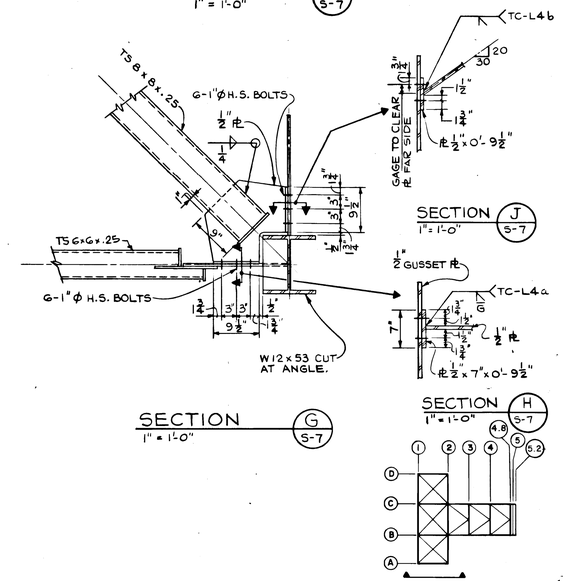

SECTION J S-7
1" = 1'-0"

SECTION G S-7
1" = 1'-0"

SECTION H S-7
1" = 1'-0"

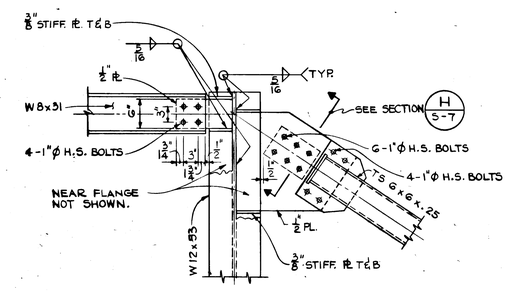

SECTION M S-7
1" = 1'-0"

GRAPHIC SCALE
1/4" = 1'-0"
1" = 1'-0"

SYM.	ZONE	REVISIONS	DATE	APPROVED
1	C7	ROLLING ACCESS PLATFORM REVISIONS	5-19-76	W.H.B.

CONNELL ASSOCIATES, INC.
ARCHITECTS / ENGINEERS / PLANNERS
CORAL GABLES, FLORIDA

SIGNATURES	DATE
DESIGNED	7-18-75
DRAWN	7-18-75
CHECKED	7-18-75
SUBMITTED	7-18-75
APPROVED	
APPROVED	
APPROVED	7/23/75
APPROVED	7/23/75
APPROVED	7/23/75
APPROVED	7-23-75

NATIONAL AERONAUTICS AND SPACE ADMINISTRATION
JOHN F. KENNEDY SPACE CENTER, NASA
KENNEDY SPACE CENTER, FLORIDA

NASA FLIGHT RESEARCH CENTER
EDWARDS AIR FORCE BASE, CALIFORNIA

ORBITER MATING DEVICE

ELEVATION FRAME "A" AND FRAME "D"

FILE NO.	SIZE	DWG. NO.	REV.
	F	79K05459	
PROJ. NO. PCN 77211		SHEET 13 OF 63	

S-7

Orbiter Mating Device
Elevation Frame A and Frame D

79K05459
SHT. 13 of 63

NBC FORM (F) 1-11A (REV. 1-68)

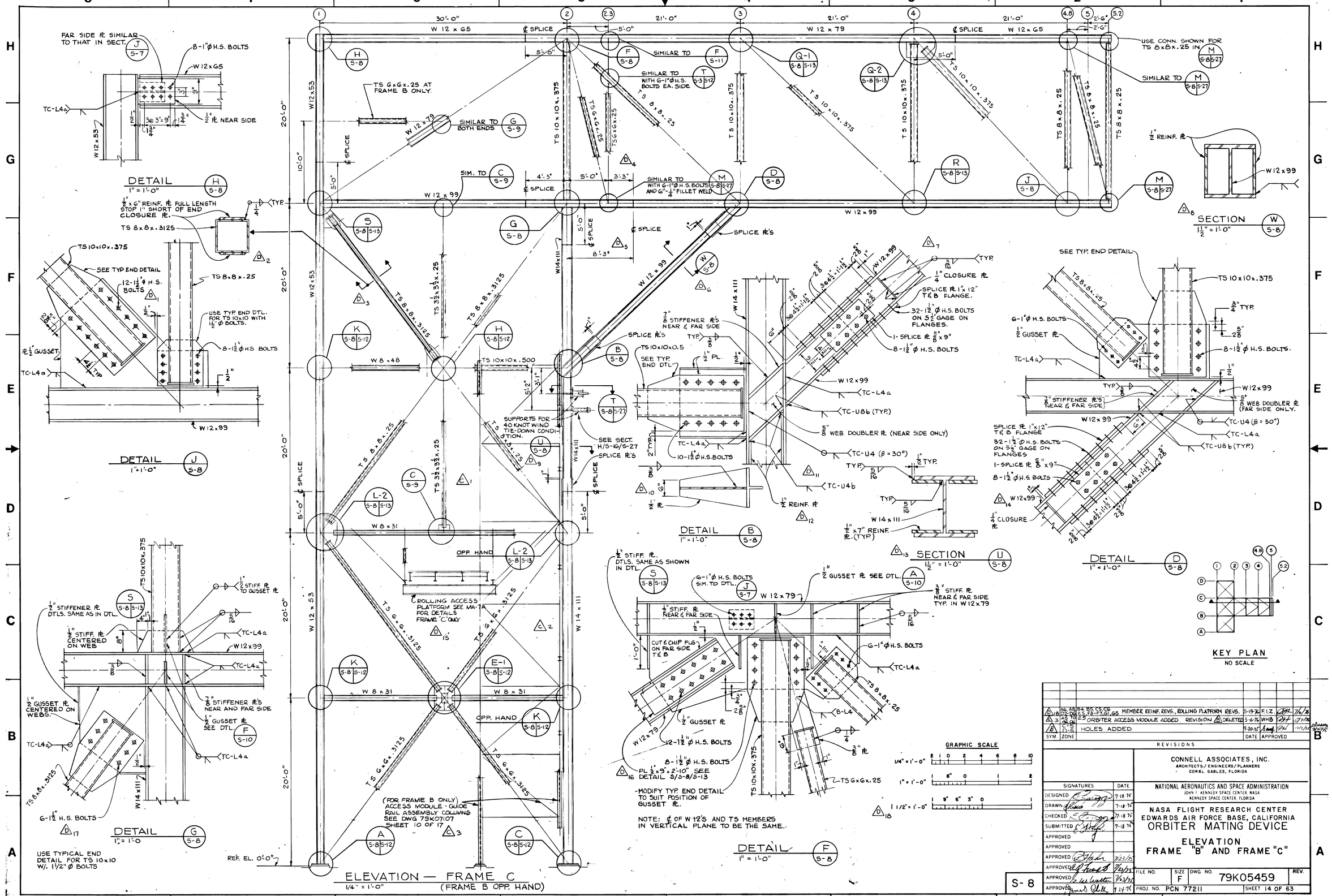
ELEVATION — FRAME C
1/4" = 1'-0"
(FRAME B OPP. HAND)
DETAIL H S-8
1" = 1'-0"
DETAIL J S-8
1" = 1'-0"
DETAIL G S-8
1" = 1'-0"
DETAIL B S-8
1" = 1'-0"
DETAIL F S-8
1" = 1'-0"
SECTION U S-8
1 1/2" = 1'-0"
SECTION W S-8
1 1/2" = 1'-0"
DETAIL D S-8
1" = 1'-0"
KEY PLAN
NO SCALE
GRAPHIC SCALE
USE TYPICAL END DETAIL FOR TS 10x10 W/. 1 1/2" Ø BOLTS
(FOR FRAME B ONLY) ACCESS MODULE - GUIDE RAIL ASSEMBLY COLUMNS SEE DWG 79K07107 SHEET 10 OF 17
ROLLING ACCESS PLATFORM SEE MA-7A FOR DETAILS FRAME "C" ONLY
SUPPORTS FOR 40 KNOT WIND TIE-DOWN CONDITION.
NOTE: ℄ OF W 12'S AND TS MEMBERS IN VERTICAL PLANE TO BE THE SAME.
-MODIFY TYP. END DETAIL TO SUIT POSITION OF GUSSET PL.
REF. EL. 0'-0"
CONNELL ASSOCIATES, INC.
ARCHITECTS/ ENGINEERS/PLANNERS
CORAL GABLES, FLORIDA
NATIONAL AERONAUTICS AND SPACE ADMINISTRATION
JOHN F. KENNEDY SPACE CENTER, NASA
KENNEDY SPACE CENTER, FLORIDA
NASA FLIGHT RESEARCH CENTER
EDWARDS AIR FORCE BASE, CALIFORNIA
ORBITER MATING DEVICE
ELEVATION
FRAME "B" AND FRAME "C"
REVISIONS
MEMBER REINF. REVS., ROLLING PLATFORM REVS.
ORBITER ACCESS MODULE ADDED
HOLES ADDED
SIGNATURES
DATE
DESIGNED
DRAWN
CHECKED
SUBMITTED
APPROVED
FILE NO.
SIZE F
DWG. NO. 79K05459
REV.
PROJ. NO. PCN 77211
SHEET 14 OF 63
S-8
Orbiter Mating Device Elevation Frame B and Frame C
79K05459 SHT. 14 OF 63

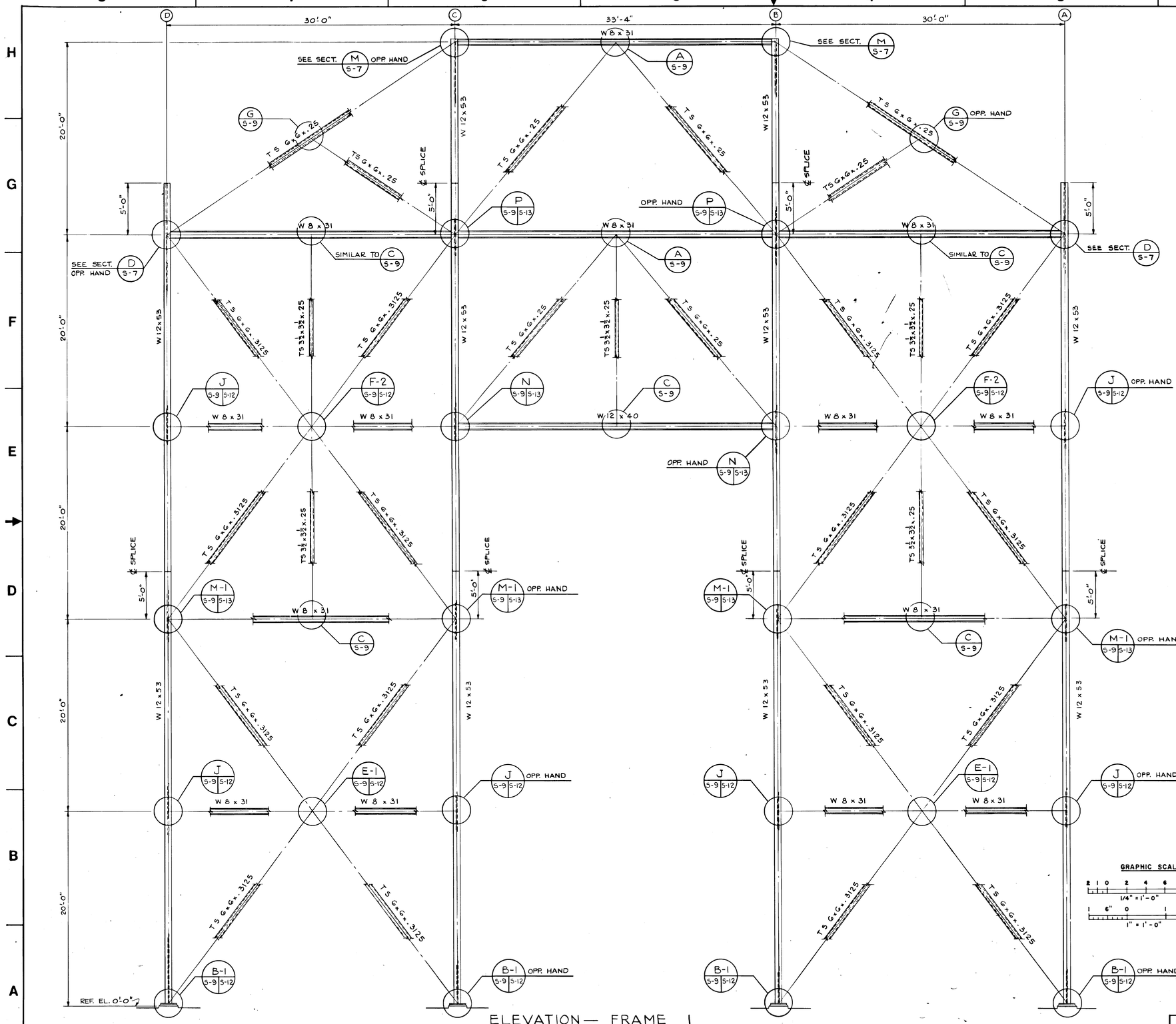

ELEVATION — FRAME 1
1/4" = 1'-0"

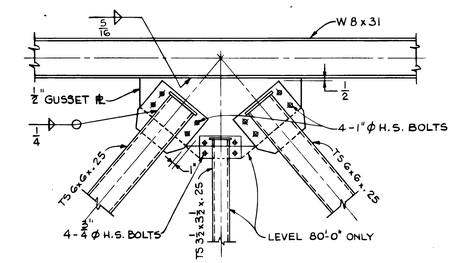

DETAIL A 5-9
1" = 1'-0"

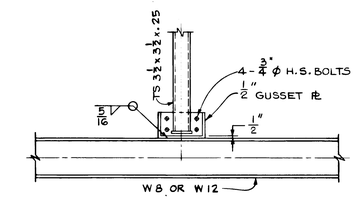

TYPICAL DETAIL C 5-9
1" = 1'-0"

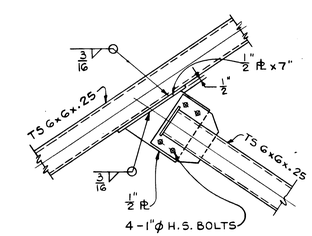

DETAIL G 5-9
1" = 1'-0"

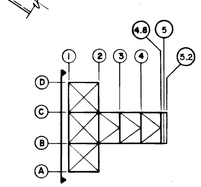

KEY PLAN
NO SCALE

GRAPHIC SCALE
1/4" = 1'-0"
1" = 1'-0"

SYM.	ZONE		DATE	APPROVED

REVISIONS

CONNELL ASSOCIATES, INC.
ARCHITECTS / ENGINEERS / PLANNERS
CORAL GABLES, FLORIDA

SIGNATURES	DATE
DESIGNED	7-18-75
DRAWN	7-18-75
CHECKED	7-18-75
SUBMITTED	7-18-75
APPROVED	
APPROVED	
APPROVED	7/23/75
APPROVED	7/23/75
APPROVED	7/23/75
APPROVED	7-24-75

NATIONAL AERONAUTICS AND SPACE ADMINISTRATION
JOHN F. KENNEDY SPACE CENTER, NASA
KENNEDY SPACE CENTER, FLORIDA

NASA FLIGHT RESEARCH CENTER
EDWARDS AIR FORCE BASE, CALIFORNIA

ORBITER MATING DEVICE

ELEVATION
FRAME 1

S-9

FILE NO.	SIZE	DWG. NO.	REV.
	F	79K05459	
PROJ. NO. PCN 77211		SHEET 15 OF 63	

KSC FORM (F) 1-11A (REV. 1-68)

Orbiter Mating Device
Elevation Frame 1

79K05459
SHT. 15 of 63

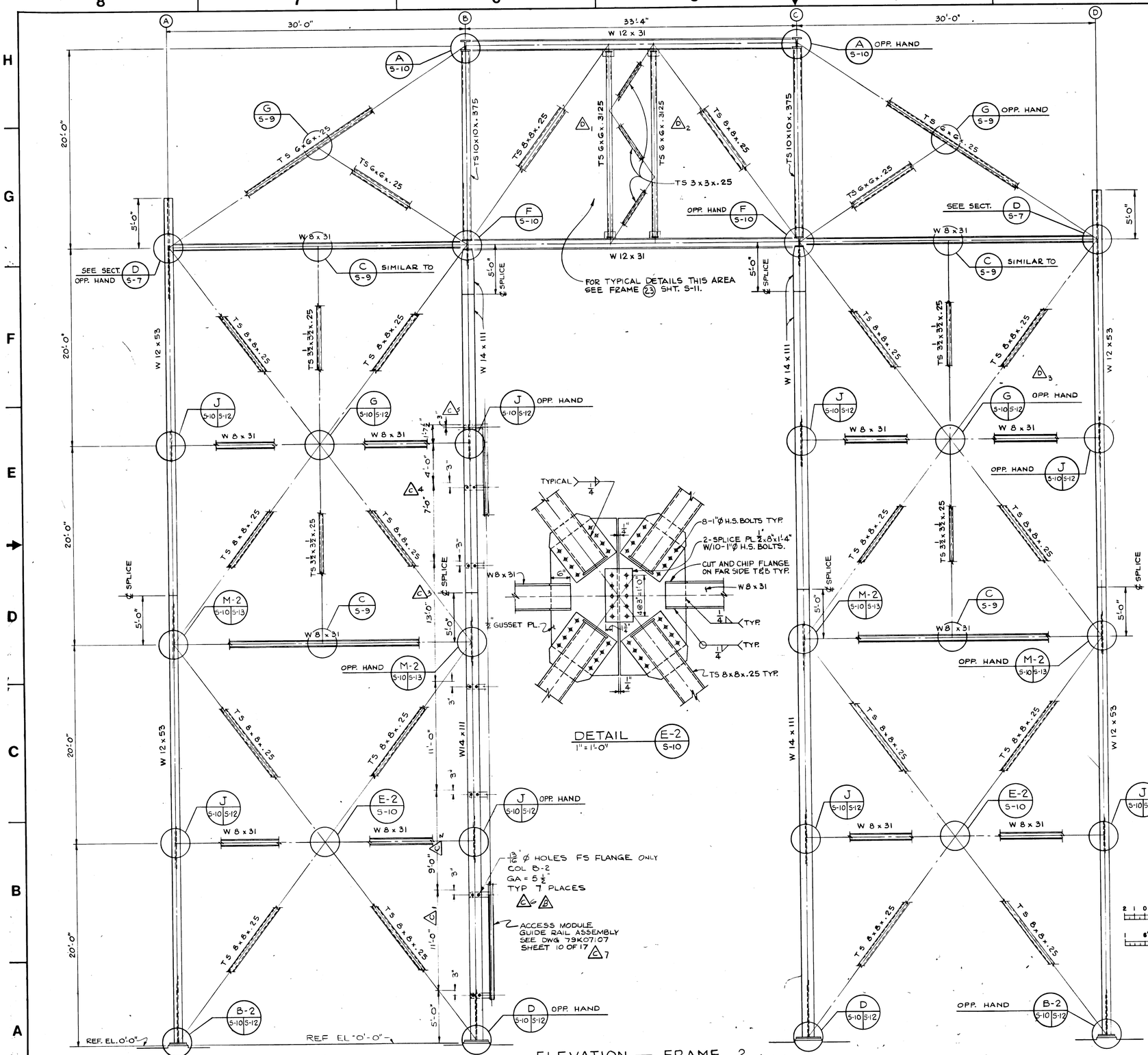

ELEVATION — FRAME 2
1/4" = 1'-0"

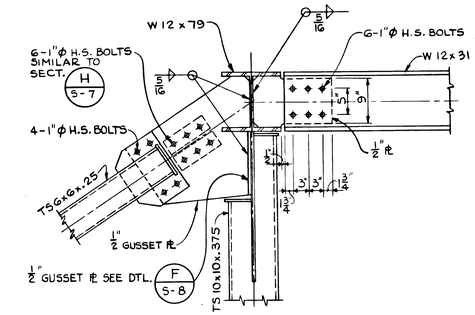

DETAIL A 5-10
1" = 1'-0"

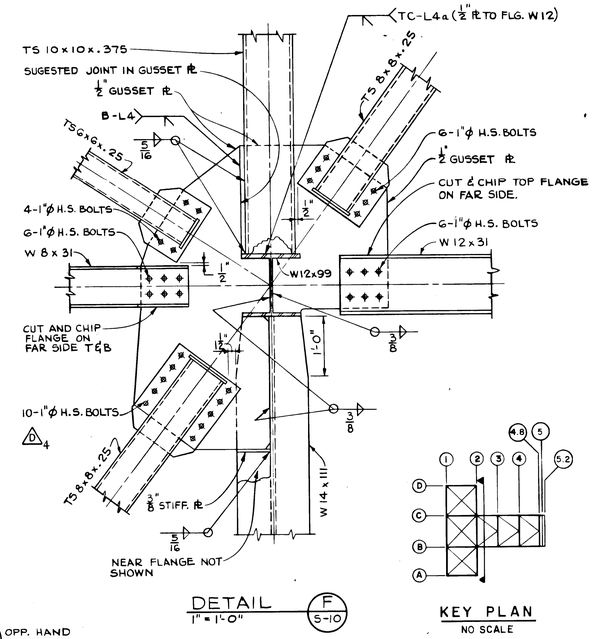

DETAIL F 5-10
1" = 1'-0"

KEY PLAN
NO SCALE

SYM.	ZONE			DATE	APPROVED
4	D2.53 G5.06 AC TO E.G.	MEMBER REINF. REVS. MISC. REVISIONS	5-19-76	F.I.Z.	7/6/76
7	E6	ORBITER-ACCESS MODULE DET. ADDED & HOLE SPA. REV.	5-6-76	WHB	5/7/76
6	AC TO E.G.	DIM & NOTE ADDED	9-30-75		10/3/75

REVISIONS

CONNELL ASSOCIATES, INC.
ARCHITECTS / ENGINEERS / PLANNERS
CORAL GABLES, FLORIDA

NATIONAL AERONAUTICS AND SPACE ADMINISTRATION
JOHN F. KENNEDY SPACE CENTER NASA
KENNEDY SPACE CENTER FLORIDA

NASA FLIGHT RESEARCH CENTER
EDWARDS AIR FORCE BASE, CALIFORNIA

ORBITER MATING DEVICE

ELEVATION
FRAME 2

SIGNATURES	DATE
DESIGNED	
DRAWN	
CHECKED	
SUBMITTED	
APPROVED	
APPROVED	
APPROVED	7/6/75
APPROVED	7/29/75
APPROVED	7/29/75
APPROVED	11-24-75

FILE NO.	SIZE	DWG. NO.	REV.
	F	79K05459	
PROJ. NO. PCN 77211		SHEET 16 OF 63	

S-10

Orbiter Mating Device
Elevation Frame 2

79K05459
SHT. 16 of 63

KSC FORM (F) 1-11A (REV. 1-68)

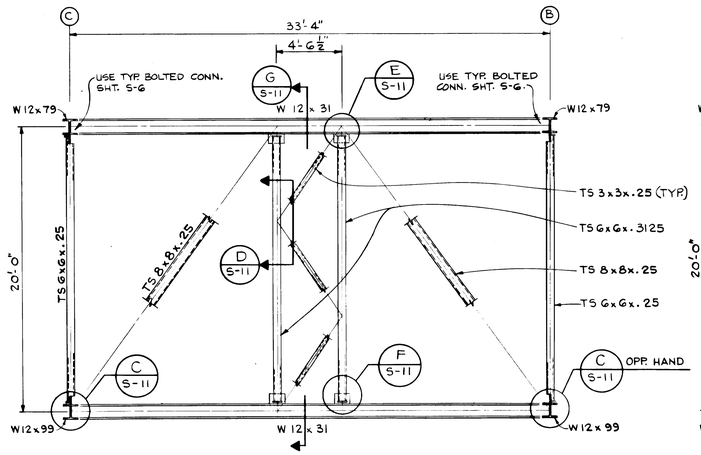

ELEVATION - FRAME (2.3)
1/4" = 1'-0"

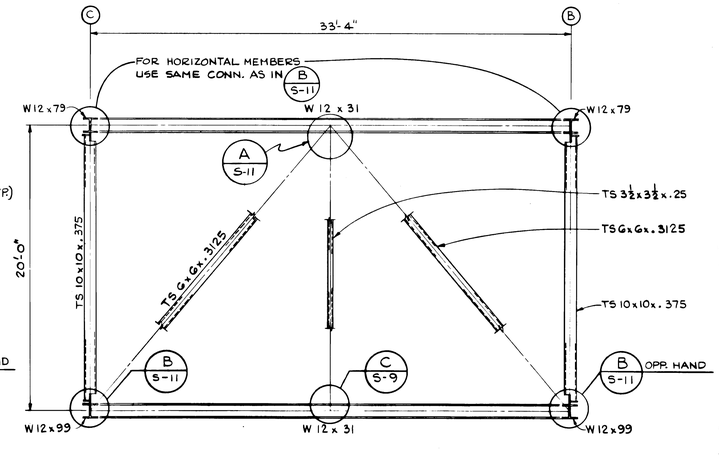

ELEVATION - FRAME (3)
1/4" = 1'-0"

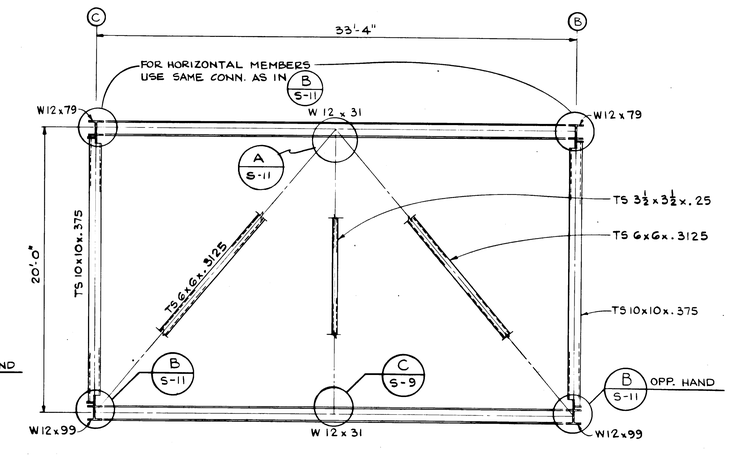

ELEVATION - FRAME (4)
1/4" = 1'-0"

NOTE: ALL FRAME DTL'S. GIVEN ARE SYMM. @ ℄ STRUCTURE

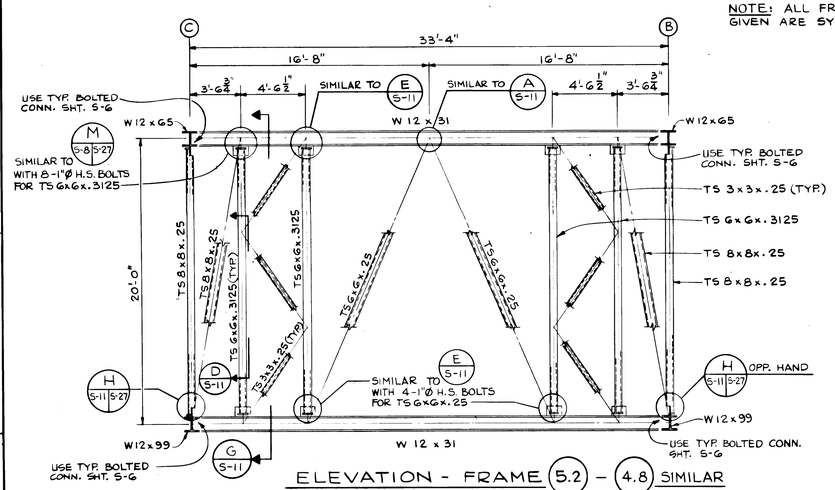

ELEVATION - FRAME (5.2) - (4.8) SIMILAR
1/4" = 1'-0"

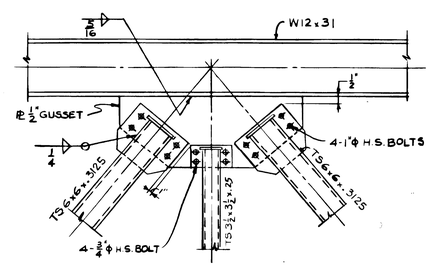

DETAIL (A) S-11
1" = 1'-0"

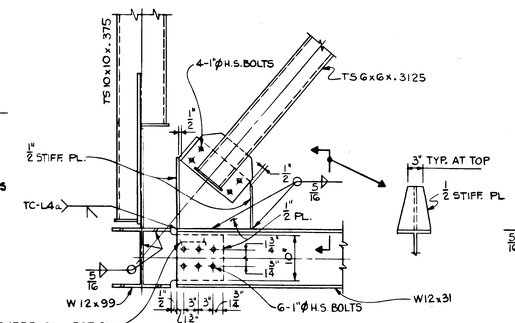

DETAIL (B) S-11
1" = 1'-0"

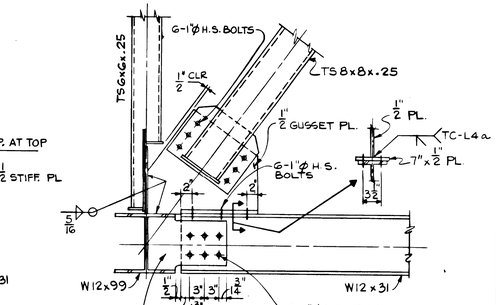

DETAIL (C) S-11
1" = 1'-0"

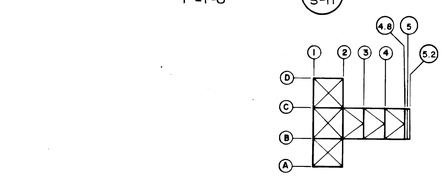

KEY PLAN
NO SCALE

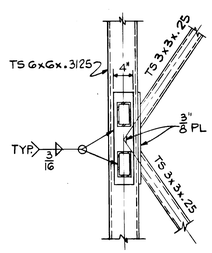

DETAIL (D) S-11
1" = 1'-0"

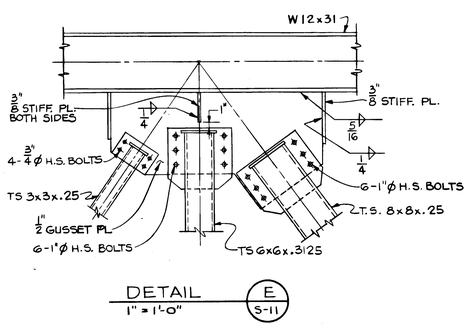

DETAIL (E) S-11
1" = 1'-0"

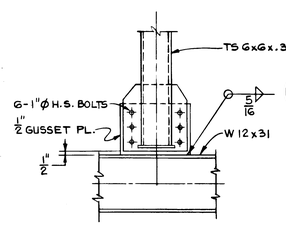

DETAIL (F) S-11
1" = 1'-0"

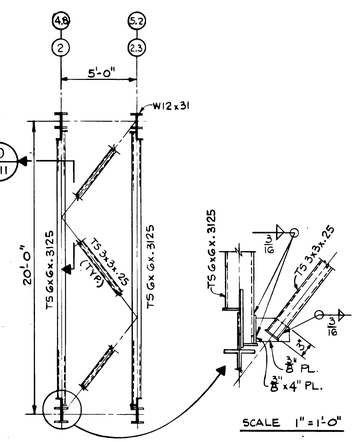

SCALE 1" = 1'-0"

SECTION (G) S-11 TYPICAL 2-FACES
1/4" = 1'-0"

GRAPHIC SCALE
1/4" = 1'-0" 2 1 0 2 4 6 8 10
1" = 1'-0" 1 6" 0 1 2

SYM.	ZONE				DATE	APPROVED

REVISIONS

CONNELL ASSOCIATES, INC.
ARCHITECTS / ENGINEERS / PLANNERS
CORAL GABLES, FLORIDA

SIGNATURES	DATE
DESIGNED	
DRAWN	
CHECKED	
SUBMITTED	
APPROVED	
APPROVED	
APPROVED	7/23/75
APPROVED	7/23/75
APPROVED	7/23/75
APPROVED	7/23/75

NATIONAL AERONAUTICS AND SPACE ADMINISTRATION
JOHN F. KENNEDY SPACE CENTER, NASA
KENNEDY SPACE CENTER, FLORIDA

NASA FLIGHT RESEARCH CENTER
EDWARDS AIR FORCE BASE, CALIFORNIA

ORBITER MATING DEVICE

ELEVATIONS - FRAMES 2.3, 3, 4, 4.8 AND 5.2

S-11

FILE NO.	SIZE	DWG. NO.	REV.
	F	79K05459	
PROJ. NO. PCN 77421		SHEET 17 OF 63	

Orbiter Mating Device
Elevations Frames 2.3, 3, 4, 4.8 and 5.2

79K05459
SHT. 17 of 63

KSC FORM (F) 1-11A (REV. 1-68)

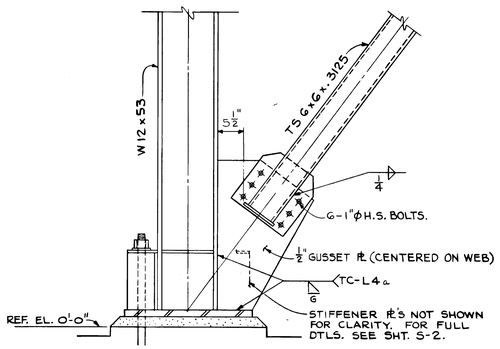

DETAIL A
1" = 1'-0"
S-7 S-8 | S-12

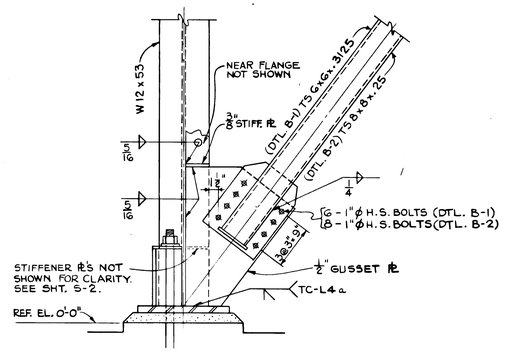

DETAIL B-1 B-2
1" = 1'-0"
S-9 S-12 | S-10 S-12

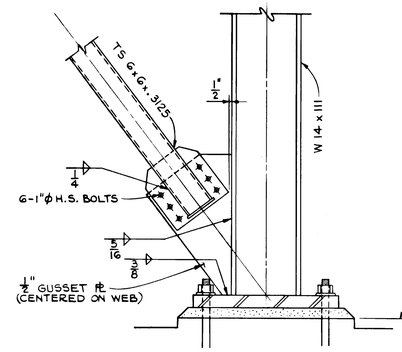

DETAIL C
1" = 1'-0"
S-8 S-12

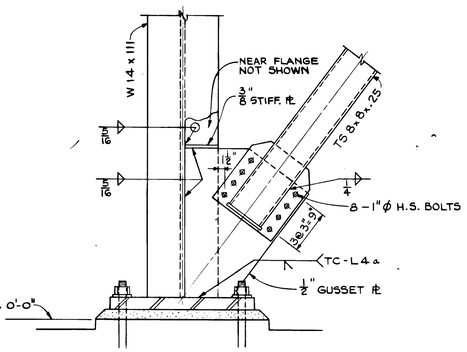

DETAIL D
1" = 1'-0"
S-10 S-12

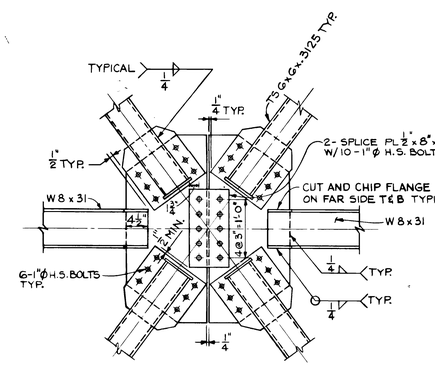

DETAIL E-1
1" = 1'-0"
S-7 S-8 S-9 | S-12

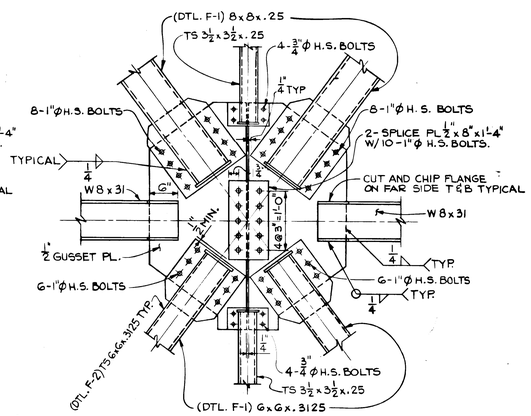

DETAIL F-1 F-2
1" = 1'-0"
S-7 S-12 | S-9 S-12

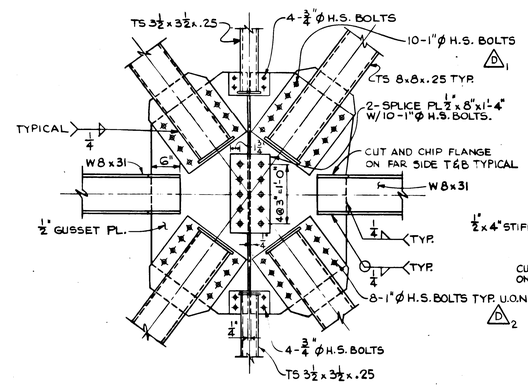

DETAIL G
1" = 1'-0"
S-10 S-12

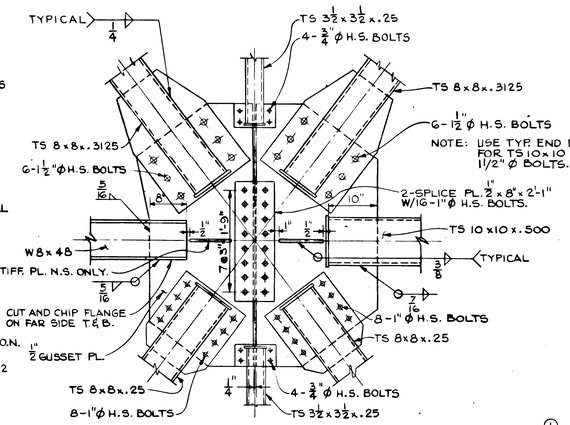

D 3
DETAIL H
1" = 1'-0"
S-8 S-12

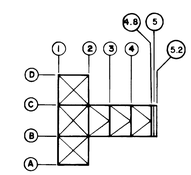

KEY PLAN
NO SCALE

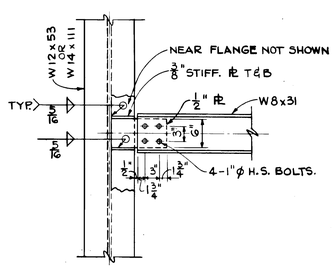

DETAIL J
1" = 1'-0"
S-9 S-10 | S-12

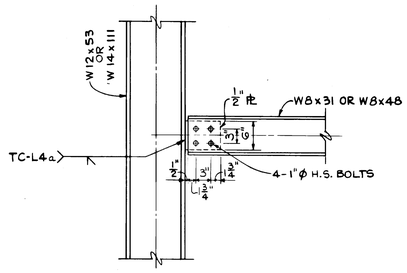

DETAIL K
1" = 1'-0"
S-7 S-8 | S-12

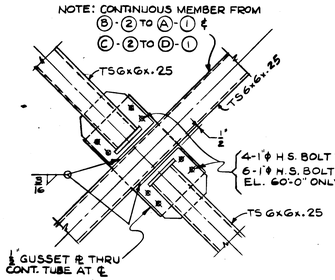

DETAIL T
1" = 1'-0"
S-3 S-4 | S-12

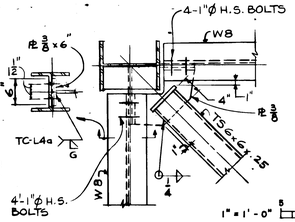

DETAIL U
1" = 1'-0"
S-3 S-4 | S-12

HORIZONTAL BRACING - CORNER

GRAPHIC SCALE
1" = 1'-0"
5 0 5 10

SYM.	ZONE		DATE	APPROVED
D 3	E2, D2, D3 E1-E4	MEMBER REINF. REVISIONS	5-19-76	F.I.Z. 7/6/76

REVISIONS

CONNELL ASSOCIATES, INC.
ARCHITECTS / ENGINEERS / PLANNERS
CORAL GABLES, FLORIDA

SIGNATURES	DATE
DESIGNED	
DRAWN	
CHECKED	
SUBMITTED	
APPROVED	
APPROVED	
APPROVED	11-22-75
APPROVED	7/23/75
APPROVED	7/23/75
APPROVED	7-23-75

NATIONAL AERONAUTICS AND SPACE ADMINISTRATION
JOHN F. KENNEDY SPACE CENTER NASA
KENNEDY SPACE CENTER, FLORIDA

NASA FLIGHT RESEARCH CENTER
EDWARDS AIR FORCE BASE, CALIFORNIA

ORBITER MATING DEVICE

FRAME CONNECTION DETAILS I

S-12

FILE NO.	SIZE	DWG. NO.	REV.
	F	79K05459	
PROJ. NO. PCN 77421		SHEET 18 OF 63	

Orbiter Mating Device
Frame Connections Details I

79K05459
SHT. 18 of 63

KSC FORM (F) 1-11A (REV. 1-68)

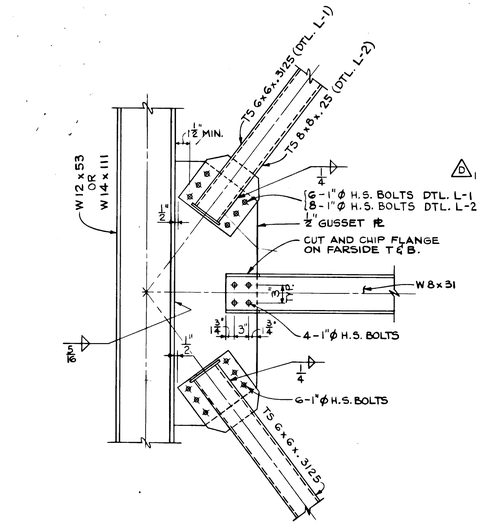

DETAIL L-1 L-2
1" = 1'-0"

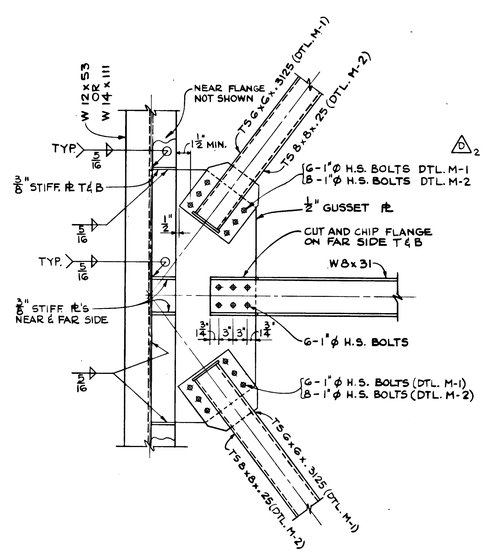

DETAIL M-1 M-2
1" = 1'-0"

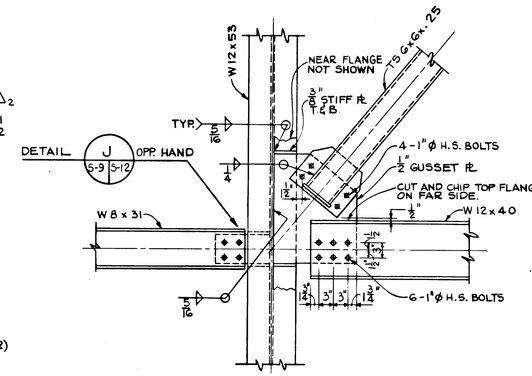

DETAIL J
S-9 S-12
OPP. HAND

DETAIL N
1" = 1'-0"
S-9 S-13

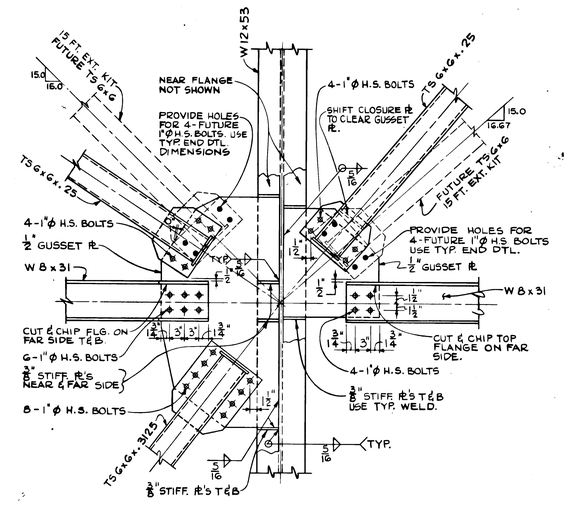

DETAIL P
1" = 1'-0"
S-9 S-13

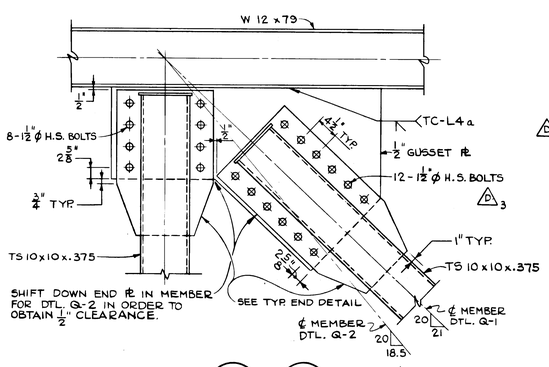

DETAIL Q-1 Q-2
1" = 1'-0"
S-8 S-13

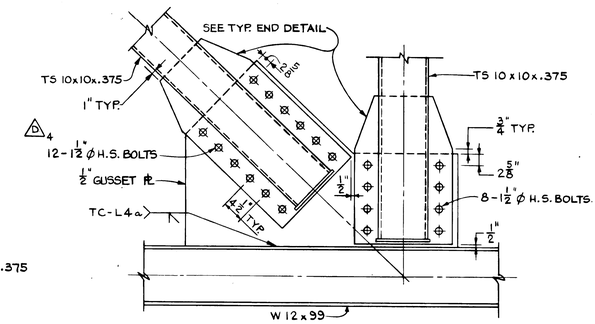

DETAIL R
1" = 1'-0"
S-8 S-13

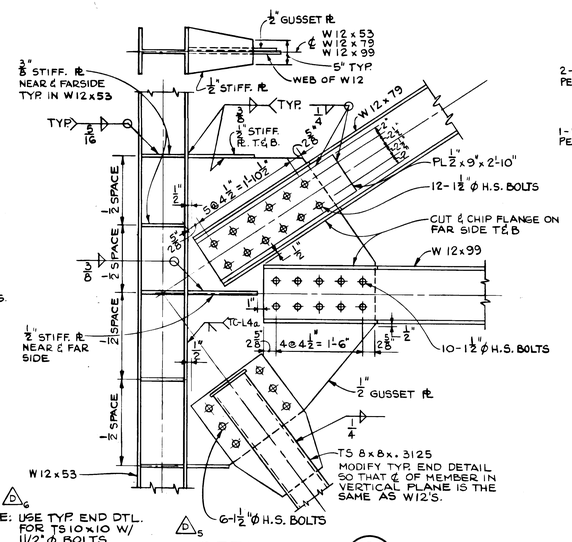

NOTE: USE TYP. END DTL. FOR TS10x10 W/ 1½"ϕ BOLTS.

DETAIL S
1" = 1'-0"
S-8 S-13

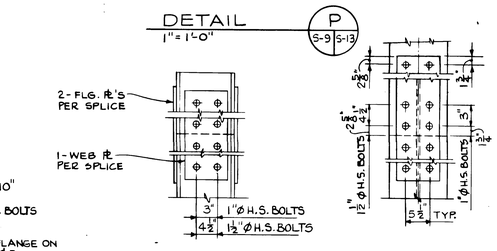

SPLICE SUMMARY TABLE

MEMBER	FLG. PL'S	FLANGE H.S. BOLTS	WEB PL	WEB H.S. BOLTS
W 14 x 111	1" x 14" x 3'-10½"	40 - 1½"ϕ	⅝" x 11" x 1'-7½"	8 - 1½"ϕ
W 12 x 99	1" x 12" x 3'-1½"	32 - 1½"ϕ	⅝" x 9½" x 1'-7½"	8 - 1½"ϕ
W 12 x 53	⅝" x 10" x 3'-1"	48 - 1"ϕ	½" x 9½" x 1'-7"	12 - 1"ϕ
W 12 x 79 TO W 12 x 65	⅝" x 10" x 2'-1"	32 - 1"ϕ	½" x 9½" x 1'-7"	12 - 1"ϕ

NOTE: H.S. BOLTS GIVEN ARE TOTAL FOR ONE SPLICE, ONE HALF TO GO ON EACH SIDE OF SPLICE.

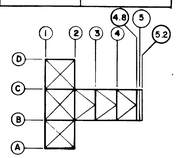

KEY PLAN
NO SCALE

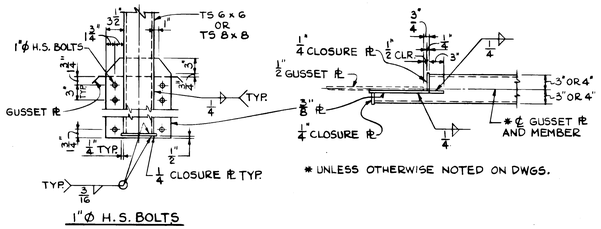

* UNLESS OTHERWISE NOTED ON DWGS.

1"ϕ H.S. BOLTS

TYPICAL END DETAIL FOR TS 6x6 OR TS 8x8 MEMBERS WITH 1"ϕ H.S. BOLTS.

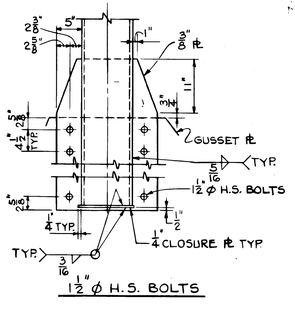

1½"ϕ H.S. BOLTS

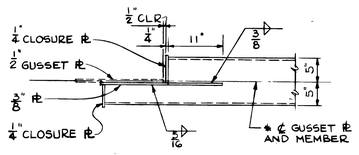

* UNLESS OTHERWISE NOTED ON DWGS.

TYPICAL END DETAIL FOR TS 10x10 WITH 1½"ϕ H.S. BOLTS

GRAPHIC SCALE
1" = 1'-0"

SYM.	ZONE		DATE	APPROVED
△G	C3, C4, D5, D6, D7, G5, G7.	MEMBER REINF. REVISIONS	5-19-76	F.I.Z.

REVISIONS

CONNELL ASSOCIATES, INC.
ARCHITECTS / ENGINEERS / PLANNERS
CORAL GABLES, FLORIDA

NATIONAL AERONAUTICS AND SPACE ADMINISTRATION
JOHN F. KENNEDY SPACE CENTER NASA
KENNEDY SPACE CENTER, FLORIDA

NASA FLIGHT RESEARCH CENTER
EDWARDS AIR FORCE BASE, CALIFORNIA

ORBITER MATING DEVICE

FRAME CONNECTION DETAILS II

SIGNATURES	DATE
DESIGNED	7-18-75
DRAWN	7-18-75
CHECKED	7-18-75
SUBMITTED	7-18-75
APPROVED	
APPROVED	
APPROVED	7/23/75
APPROVED	7/24/75
APPROVED	7-24-75
APPROVED	7-24-75

FILE NO.	SIZE	DWG. NO.	REV.
	F	79K05459	
PROJ. NO. PCN 77		SHEET 19 OF 63	

S-13

Orbiter Mating Device
Frame Connection Details II

79K05459
SHT. 19 of 63

KBC FORM (P) 1-11A (REV. 1-80)

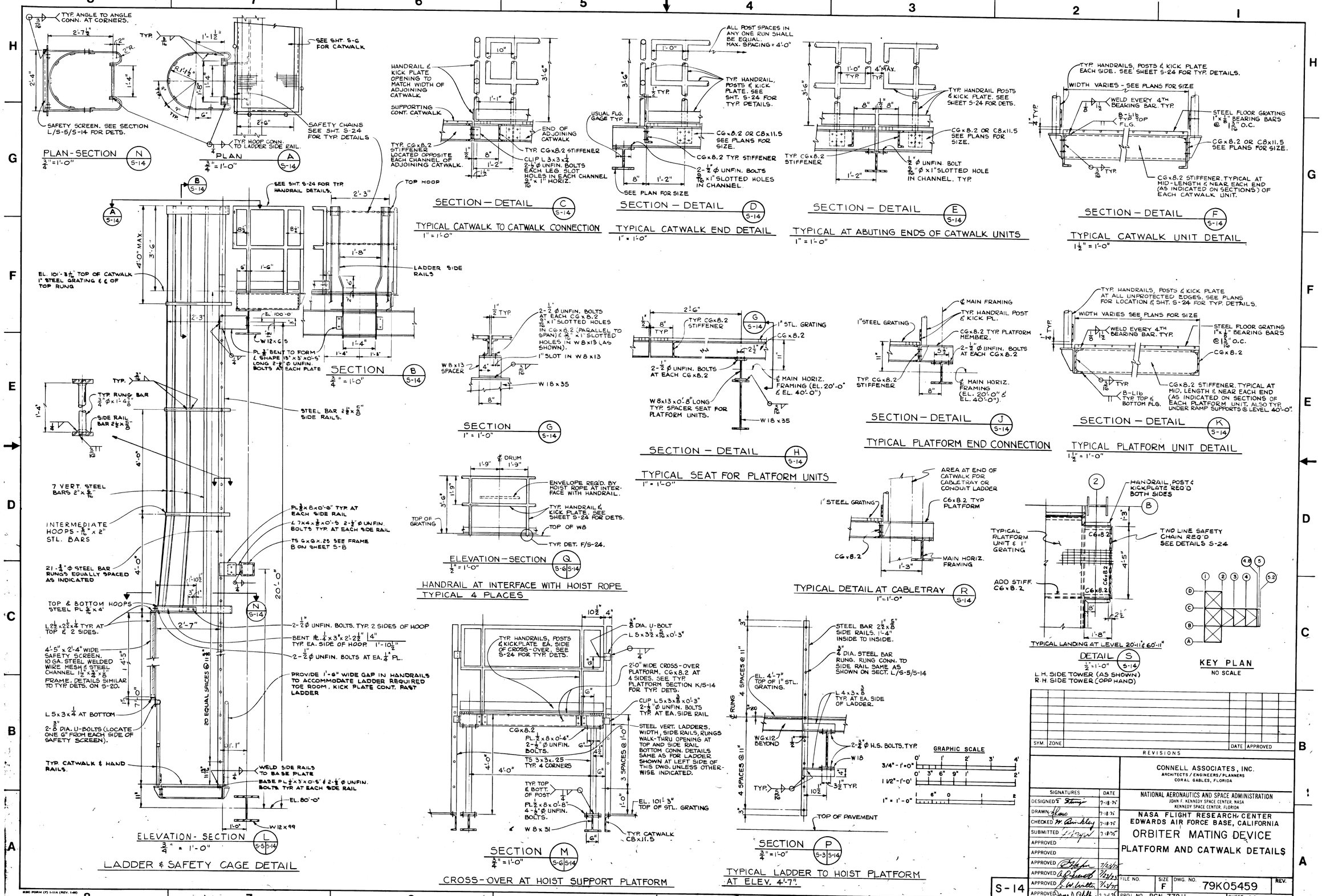

SYM.	ZONE		DATE	APPROVED

REVISIONS

CONNELL ASSOCIATES, INC.
ARCHITECTS/ENGINEERS/PLANNERS
CORAL GABLES, FLORIDA

NATIONAL AERONAUTICS AND SPACE ADMINISTRATION
JOHN F. KENNEDY SPACE CENTER, NASA
KENNEDY SPACE CENTER, FLORIDA

NASA FLIGHT RESEARCH CENTER
EDWARDS AIR FORCE BASE, CALIFORNIA

ORBITER MATING DEVICE
PLATFORM AND CATWALK DETAILS

SIGNATURES	DATE
DESIGNED	7-18-75
DRAWN	7-18-75
CHECKED	7-18-75
SUBMITTED	7-18-75
APPROVED	
APPROVED	
APPROVED	7/24/75
APPROVED	7/24/75
APPROVED	7/24/75
APPROVED	7-24-75

S-14

FILE NO.	SIZE	DWG. NO.	REV.
	F	79K05459	
PROJ. NO. PCN 77211		SHEET 20 OF 63	

Orbiter Mating Device Platform & Catwalk Details

79K05459 SHT. 20 of 63

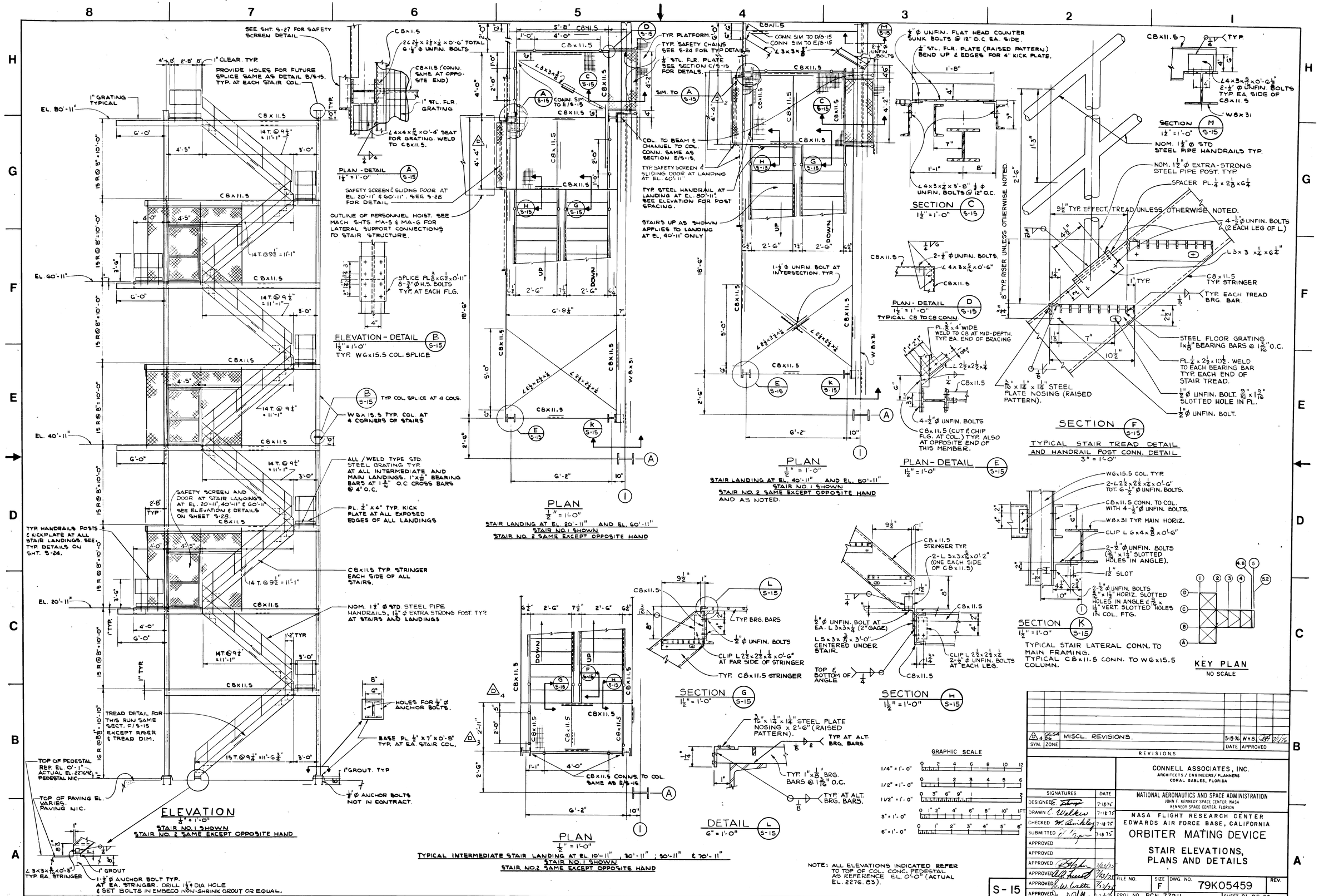
ELEVATION
1/4" = 1'-0"
STAIR NO. 1 SHOWN
STAIR NO. 2 SAME EXCEPT OPPOSITE HAND
PLAN
1/2" = 1'-0"
STAIR LANDING AT EL. 20'-11" AND EL. 60'-11"
STAIR NO. 1 SHOWN
STAIR NO. 2 SAME EXCEPT OPPOSITE HAND
PLAN
1/2" = 1'-0"
STAIR LANDING AT EL. 40'-11" AND EL. 80'-11"
STAIR NO. 1 SHOWN
STAIR NO. 2 SAME EXCEPT OPPOSITE HAND AND AS NOTED.
PLAN
1/2" = 1'-0"
TYPICAL INTERMEDIATE STAIR LANDING AT EL. 10'-11", 30'-11"; 50'-11" & 70'-11"
STAIR NO. 1 SHOWN
STAIR NO. 2 SAME EXCEPT OPPOSITE HAND
ELEVATION - DETAIL
1/2" = 1'-0"
TYP. W6x15.5 COL. SPLICE
PLAN - DETAIL
1/2" = 1'-0"
SAFETY SCREEN & SLIDING DOOR AT EL. 20'-11" & 60'-11". SEE S-28 FOR DETAIL
SECTION
1/2" = 1'-0"
PLAN - DETAIL
1/2" = 1'-0"
TYPICAL C8 TO C8 CONN.
PLAN - DETAIL
1/2" = 1'-0"
SECTION
1/2" = 1'-0"
SECTION
1/2" = 1'-0"
SECTION
1/2" = 1'-0"
SECTION
1/2" = 1'-0"
TYPICAL STAIR TREAD DETAIL AND HANDRAIL POST CONN. DETAIL
3" = 1'-0"
SECTION
1/2" = 1'-0"
TYPICAL STAIR LATERAL CONN. TO MAIN FRAMING. TYPICAL C8x11.5 CONN. TO W6x15.5 COLUMN.
KEY PLAN
NO SCALE
DETAIL
6" = 1'-0"
GRAPHIC SCALE
NOTE: ALL ELEVATIONS INDICATED REFER TO TOP OF COL. CONC. PEDESTAL AS REFERENCE EL. 0'-0" (ACTUAL EL. 2276.83).
MISCL. REVISIONS.
REVISIONS
CONNELL ASSOCIATES, INC.
ARCHITECTS / ENGINEERS / PLANNERS
CORAL GABLES, FLORIDA
NATIONAL AERONAUTICS AND SPACE ADMINISTRATION
JOHN F. KENNEDY SPACE CENTER, NASA
KENNEDY SPACE CENTER, FLORIDA
NASA FLIGHT RESEARCH CENTER
EDWARDS AIR FORCE BASE, CALIFORNIA
ORBITER MATING DEVICE
STAIR ELEVATIONS, PLANS AND DETAILS
SIGNATURES
DESIGNED
DRAWN
CHECKED
SUBMITTED
APPROVED
FILE NO.
SIZE F
DWG. NO. 79K05459
REV.
PROJ. NO. PCN 77211
SHEET 21 OF 63
S-15

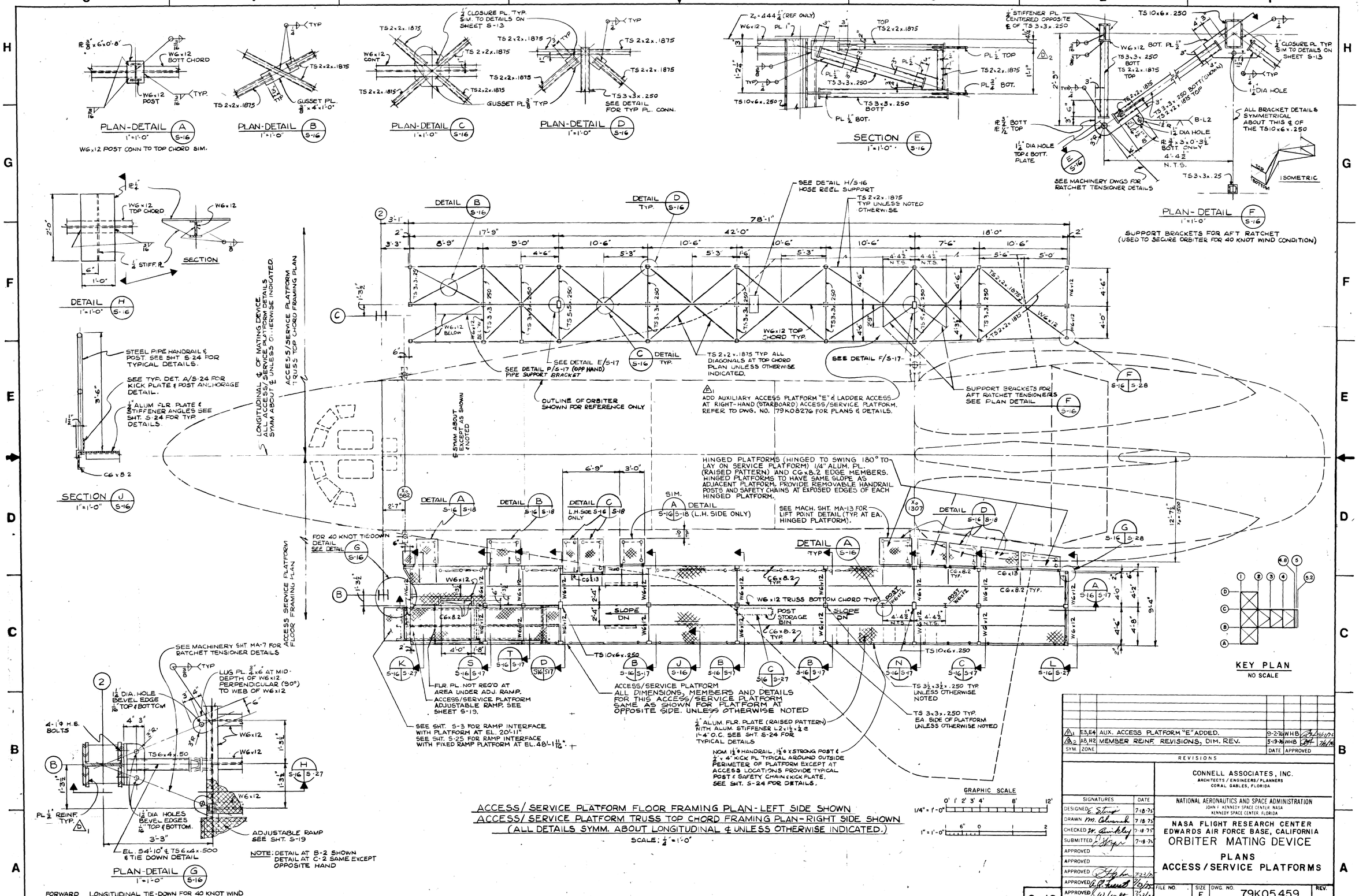
PLAN-DETAIL A 1"=1'-0" S-16
W6x12 POST CONN TO TOP CHORD SIM.
PLAN-DETAIL B 1"=1'-0" S-16
PLAN-DETAIL C 1"=1'-0" S-16
PLAN-DETAIL D 1"=1'-0" S-16
SEE DETAIL FOR TYP PL. CONN.
SECTION E 1"=1'-0" S-16
PLAN-DETAIL F 1"=1'-0" S-16
SUPPORT BRACKETS FOR AFT RATCHET (USED TO SECURE ORBITER FOR 40 KNOT WIND CONDITION)
ISOMETRIC
SEE MACHINERY DWGS FOR RATCHET TENSIONER DETAILS
DETAIL H 1"=1'-0" S-16
SECTION
SEE DETAIL H/S-16 HOSE REEL SUPPORT
TS 2x2x.1875 TYP UNLESS NOTED OTHERWISE
SEE DETAIL E/S-17
SEE DETAIL P/S-17 (OPP HAND) PIPE SUPPORT BRACKET
OUTLINE OF ORBITER SHOWN FOR REFERENCE ONLY
TS 2x2x.1875 TYP. ALL DIAGONALS AT TOP CHORD PLAN UNLESS OTHERWISE INDICATED.
SEE DETAIL F/S-17
ADD AUXILIARY ACCESS PLATFORM "E" & LADDER ACCESS AT RIGHT-HAND (STARBOARD) ACCESS/SERVICE PLATFORM. REFER TO DWG. NO. 79K08276 FOR PLANS & DETAILS.
SUPPORT BRACKETS FOR AFT RATCHET TENSIONERS SEE PLAN DETAIL F/S-16
HINGED PLATFORMS (HINGED TO SWING 180° TO LAY ON SERVICE PLATFORM) 1/4" ALUM. PL. (RAISED PATTERN) AND C6x8.2 EDGE MEMBERS. HINGED PLATFORMS TO HAVE SAME SLOPE AS ADJACENT PLATFORM. PROVIDE REMOVABLE HANDRAIL POSTS AND SAFETY CHAINS AT EXPOSED EDGES OF EACH HINGED PLATFORM.
SEE MACH. SHT. MA-13 FOR LIFT POINT DETAIL (TYP. AT EA. HINGED PLATFORM).
FOR 40 KNOT TIE-DOWN DETAIL SEE DETAIL G/S-16
SEE MACHINERY SHT MA-7 FOR RATCHET TENSIONER DETAILS
LUG PL 3/8"x6" AT MID-DEPTH OF W6x12 PERPENDICULAR (90°) TO WEB OF W6x12
FLR. PL. NOT REQ'D AT AREA UNDER ADJ. RAMP.
ACCESS/SERVICE PLATFORM ADJUSTABLE RAMP. SEE SHEET S-19.
SEE SHT. S-3 FOR RAMP INTERFACE WITH PLATFORM AT EL. 20'-11"
SEE SHT. S-25 FOR RAMP INTERFACE WITH FIXED RAMP PLATFORM AT EL. 48'-11 11/16".
ACCESS/SERVICE PLATFORM ALL DIMENSIONS, MEMBERS AND DETAILS FOR THIS ACCESS/SERVICE PLATFORM SAME AS SHOWN FOR PLATFORM AT OPPOSITE SIDE. UNLESS OTHERWISE NOTED
1/4" ALUM. FLR. PLATE (RAISED PATTERN) WITH ALUM. STIFFENER L2x1 1/2x1/4 @ 1'-4" O.C. SEE SHT S-24 FOR TYPICAL DETAILS
NOM 1 1/2" ø HANDRAIL, 1 1/2" ø X STRONG POST & 1/4"x 4" KICK PL TYPICAL AROUND OUTSIDE PERIMETER OF PLATFORM EXCEPT AT ACCESS LOCATIONS PROVIDE TYPICAL POST & SAFETY CHAIN & KICK PLATE. SEE SHT. S-24 FOR DETAILS.
TS 3 1/2x3 1/2x.250 TYP. UNLESS OTHERWISE NOTED
TS 3x3x.250 TYP. EA. SIDE OF PLATFORM UNLESS OTHERWISE NOTED
W6x12 TRUSS BOTTOM CHORD TYP.
W6x12 TOP CHORD TYP.
SLOPE DN
POST STORAGE BIN
ADJUSTABLE RAMP SEE SHT. S-19
EL. 54'-10" & TS 6x4x.500 & TIE DOWN DETAIL
NOTE: DETAIL AT B-2 SHOWN DETAIL AT C-2 SAME EXCEPT OPPOSITE HAND
PLAN-DETAIL G 1"=1'-0" S-16
FORWARD LONGITUDINAL TIE-DOWN FOR 40 KNOT WIND
LONGITUDINAL ℄ OF MATING DEVICE ALL ACCESS/SERVICE PLATFORM DETAILS SYMM ABOUT ℄ UNLESS OTHERWISE INDICATED.
ACCESS/SERVICE PLATFORM TRUSS TOP CHORD FRAMING PLAN
ACCESS SERVICE PLATFORM FLOOR FRAMING PLAN
℄ SYMM ABOUT EXCEPT AS SHOWN & NOTED
KEY PLAN NO SCALE
ACCESS/SERVICE PLATFORM FLOOR FRAMING PLAN-LEFT SIDE SHOWN
ACCESS/SERVICE PLATFORM TRUSS TOP CHORD FRAMING PLAN-RIGHT SIDE SHOWN
(ALL DETAILS SYMM. ABOUT LONGITUDINAL ℄ UNLESS OTHERWISE INDICATED.)
SCALE: 1/8"=1'-0"
GRAPHIC SCALE
A1 E3,E4 AUX. ACCESS PLATFORM "E" ADDED. 9-27-76 WHB
A2 A8,H2 MEMBER REINF. REVISIONS, DIM. REV. 5-19-76 WHB
REVISIONS
CONNELL ASSOCIATES, INC. ARCHITECTS/ENGINEERS/PLANNERS CORAL GABLES, FLORIDA
NATIONAL AERONAUTICS AND SPACE ADMINISTRATION JOHN F. KENNEDY SPACE CENTER NASA KENNEDY SPACE CENTER, FLORIDA
NASA FLIGHT RESEARCH CENTER EDWARDS AIR FORCE BASE, CALIFORNIA
ORBITER MATING DEVICE
PLANS
ACCESS/SERVICE PLATFORMS
SIGNATURES DATE
DESIGNED 7-18-75
DRAWN 7-18-75
CHECKED 7-18-75
SUBMITTED 7-18-75
APPROVED
APPROVED
APPROVED 7-22-75
APPROVED 7/23/75
APPROVED 7-23-75
APPROVED 12-4-75
S-16
FILE NO. SIZE F DWG. NO. 79K05459 REV.
PROJ. NO. PCN 77211 SHEET 22 OF 63
Orbiter Mating Device Plans, Access/Service Platforms
79K05459 SHT. 22 of 63

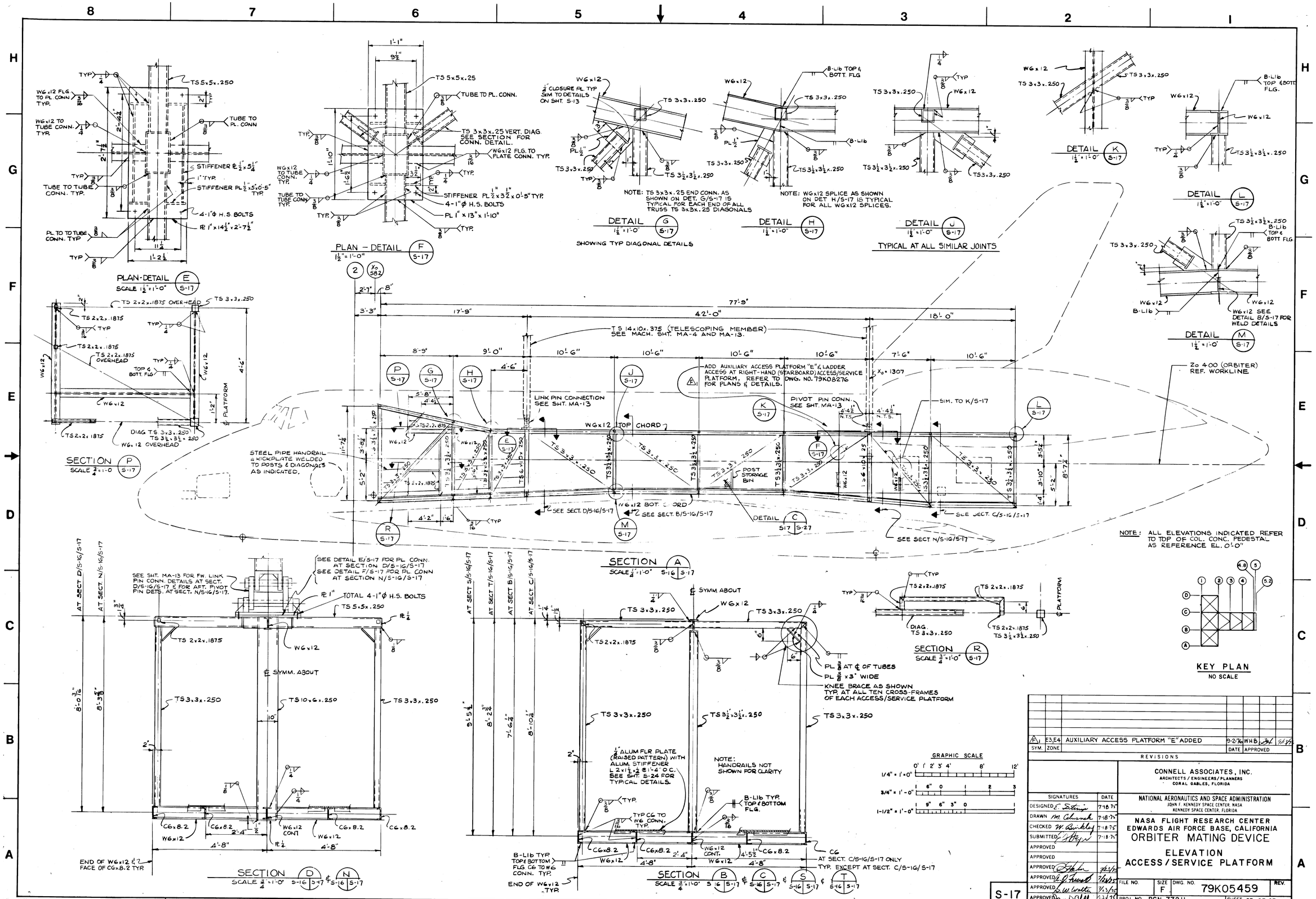
PLAN-DETAIL E S-17
SCALE 1½"=1'-0"
PLAN – DETAIL F S-17
1½"=1'-0"
DETAIL G S-17
1½"=1'-0"
SHOWING TYP DIAGONAL DETAILS
NOTE: TS 3x3x.25 END CONN. AS SHOWN ON DET. G/S-17 IS TYPICAL FOR EACH END OF ALL TRUSS TS 3x3x.25 DIAGONALS
DETAIL H S-17
1½"=1'-0"
NOTE: WG x12 SPLICE AS SHOWN ON DET H/S-17 IS TYPICAL FOR ALL WG x12 SPLICES.
DETAIL J S-17
1½"=1'-0"
TYPICAL AT ALL SIMILAR JOINTS
DETAIL K S-17
1½"=1'-0"
DETAIL L S-17
1½"=1'-0"
DETAIL M S-17
1½"=1'-0"
SECTION P S-17
SCALE ¾"=1'-0"
SECTION A S-16 S-17
SCALE ¾"=1'-0"
SECTION R S-17
SCALE ¾"=1'-0"
SECTION D S-16 S-17 & N S-16 S-17
SCALE ¾"=1'-0"
SECTION B S-16 S-17 & C S-16 S-17 & S S-16 S-17 & T S-16 S-17
SCALE ¾"=1'-0"
TS 14x10x.375 (TELESCOPING MEMBER) SEE MACH. SHT. MA-4 AND MA-13.
ADD AUXILIARY ACCESS PLATFORM "E" & LADDER ACCESS AT RIGHT-HAND (STARBOARD) ACCESS/SERVICE PLATFORM. REFER TO DWG. NO. 79K08276 FOR PLANS & DETAILS.
LINK PIN CONNECTION SEE SHT. MA-13
PIVOT PIN CONN. SEE SHT. MA-13
SIM. TO K/S-17
WG x12 TOP CHORD
WG x12 BOT. CHORD
STEEL PIPE HANDRAIL & KICKPLATE WELDED TO POSTS & DIAGONALS AS INDICATED.
POST STORAGE BIN
Zo 400 (ORBITER) REF. WORKLINE
NOTE: ALL ELEVATIONS INDICATED REFER TO TOP OF COL. CONC. PEDESTAL AS REFERENCE EL. 0'-0"
KEY PLAN
NO SCALE
GRAPHIC SCALE
SEE SHT. MA-13 FOR FW. LINK PIN CONN. DETAILS AT SECT. D/S-16/S-17 & FOR AFT. PIVOT PIN DETS. AT SECT. N/S-16/S-17.
SEE DETAIL E/S-17 FOR PL CONN. AT SECTION D/S-16/S-17
SEE DETAIL F/S-17 FOR PL CONN AT SECTION N/S-16/S-17
TOTAL 4-1"Φ H.S. BOLTS
℄ SYMM. ABOUT
PL AT ℄ OF TUBES
PL ⅜" x 3" WIDE
KNEE BRACE AS SHOWN TYP. AT ALL TEN CROSS-FRAMES OF EACH ACCESS/SERVICE PLATFORM
¼" ALUM FLR PLATE (RAISED PATTERN) WITH ALUM. STIFFENER L 2x1½x¼ @1'-4" O.C. SEE SHT. S-24 FOR TYPICAL DETAILS.
NOTE: HANDRAILS NOT SHOWN FOR CLARITY
END OF WG x12 & FACE OF CG x 8.2 TYP.
END OF WG x12 TYP.
AT SECT. C/S-16/S-17 ONLY
TYP. EXCEPT AT SECT. C/S-16/S-17
E3,E4 AUXILIARY ACCESS PLATFORM "E" ADDED
REVISIONS
CONNELL ASSOCIATES, INC.
ARCHITECTS / ENGINEERS / PLANNERS
CORAL GABLES, FLORIDA
NATIONAL AERONAUTICS AND SPACE ADMINISTRATION
JOHN F. KENNEDY SPACE CENTER, NASA
KENNEDY SPACE CENTER, FLORIDA
NASA FLIGHT RESEARCH CENTER
EDWARDS AIR FORCE BASE, CALIFORNIA
ORBITER MATING DEVICE
ELEVATION
ACCESS / SERVICE PLATFORM
S-17
79K05459
PCN 77211
SHEET 23 OF 63
Orbiter Mating Device Elevation Access/Service Platform
79K05459 SHT 23 of 63

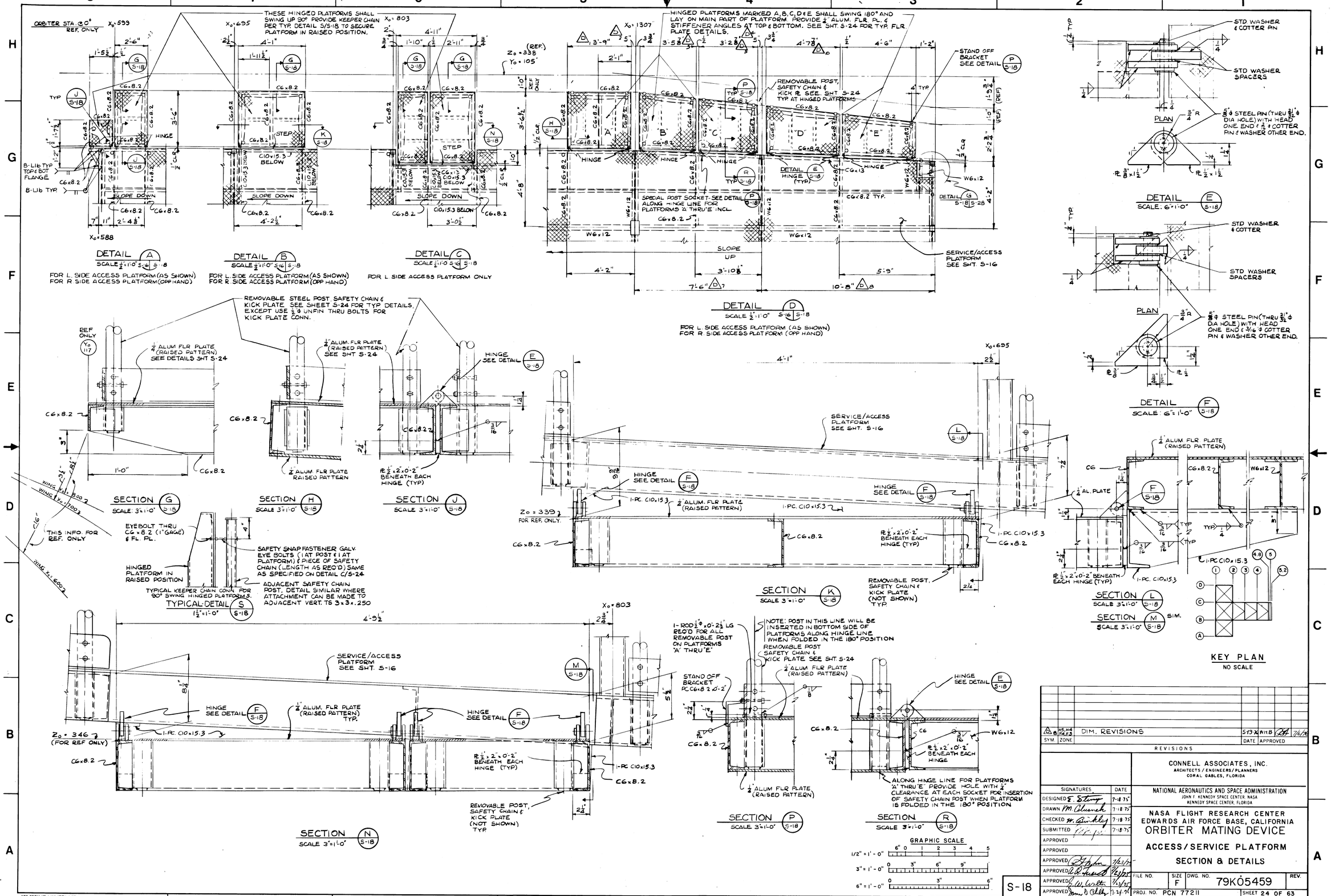

SYM.	ZONE		DATE	APPROVED
B	H5, H4 F4, F3	DIM. REVISIONS	5-19-76	W.H.B. 7/6/76

REVISIONS

CONNELL ASSOCIATES, INC.
ARCHITECTS / ENGINEERS / PLANNERS
CORAL GABLES, FLORIDA

NATIONAL AERONAUTICS AND SPACE ADMINISTRATION
JOHN F. KENNEDY SPACE CENTER, NASA
KENNEDY SPACE CENTER, FLORIDA

NASA FLIGHT RESEARCH CENTER
EDWARDS AIR FORCE BASE, CALIFORNIA

ORBITER MATING DEVICE

ACCESS/SERVICE PLATFORM SECTION & DETAILS

SIGNATURES	DATE
DESIGNED E. Strong	7-18-75
DRAWN M. Clausch	7-18-75
CHECKED W. Buckley	7-18-75
SUBMITTED	7-18-75
APPROVED	
APPROVED	
APPROVED	7/23/76
APPROVED	7/23/76
APPROVED	7/23/76
APPROVED	7-23-76

S-18

FILE NO. | SIZE F | DWG. NO. 79K05459 | REV.

PROJ. NO. PCN 77211 | SHEET 24 OF 63

KSC FORM (F) 1-11A (REV. 1-66)

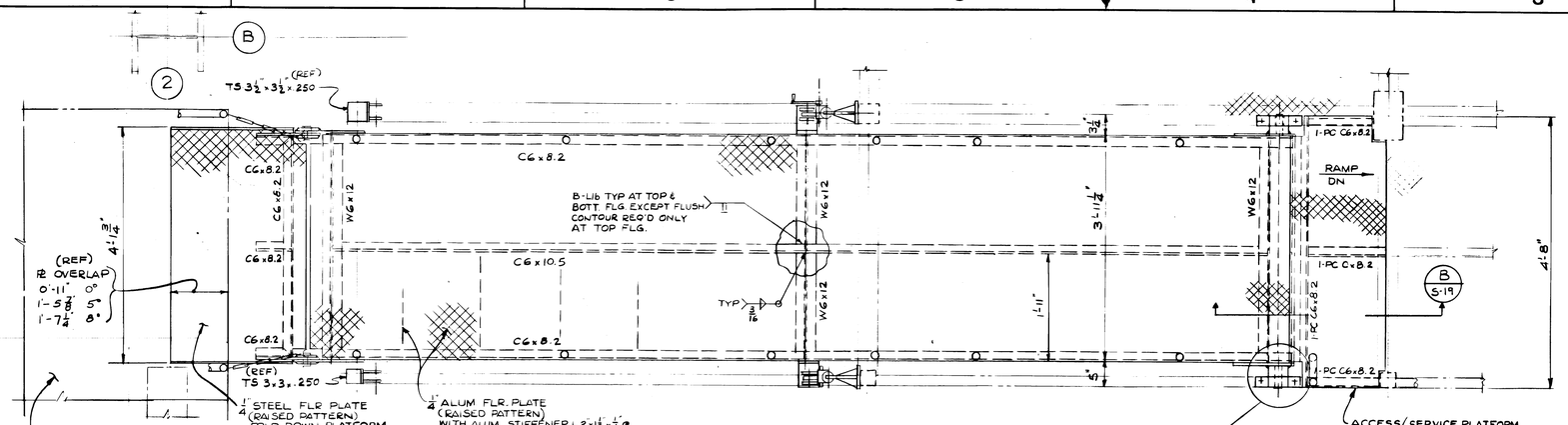

ADJUSTABLE RAMP PLAN

SCALE 1"=1'-0"

L.H. ACCESS/SERVICE PLATFORM (AS SHOWN)
R.H. ACCESS/SERVICE PLATFORM (OPP HAND)

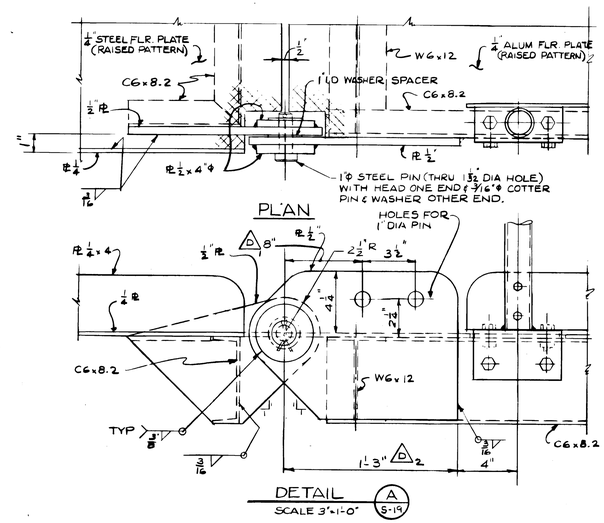

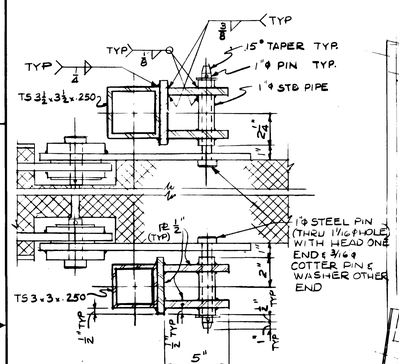

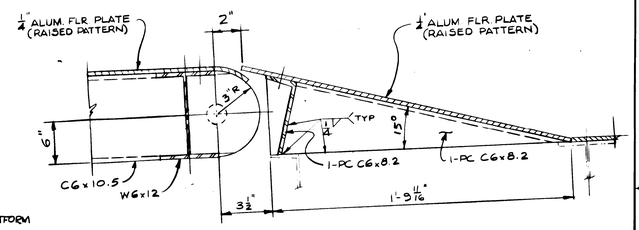

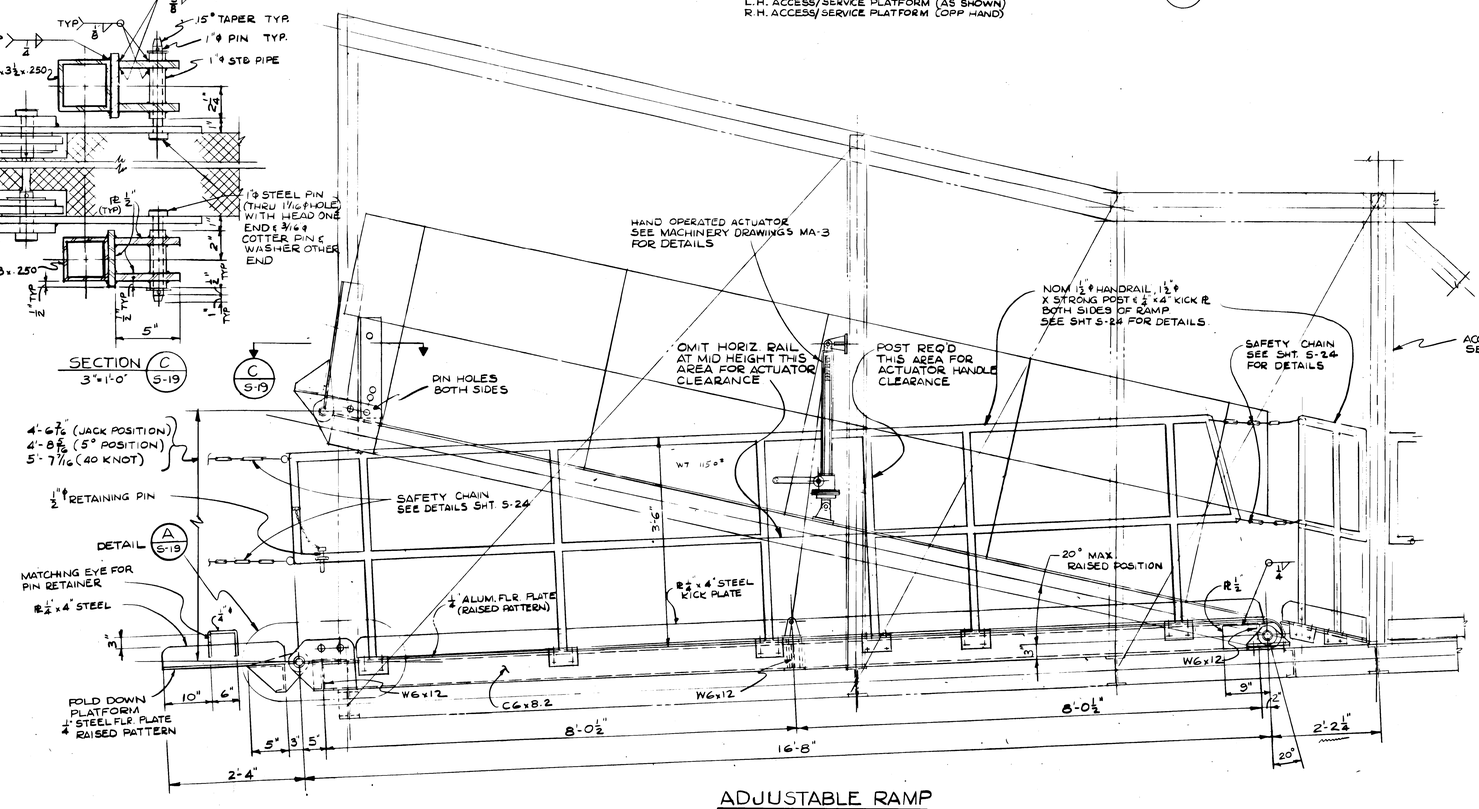

ADJUSTABLE RAMP ELEVATION

SCALE: 1"=1'-0"

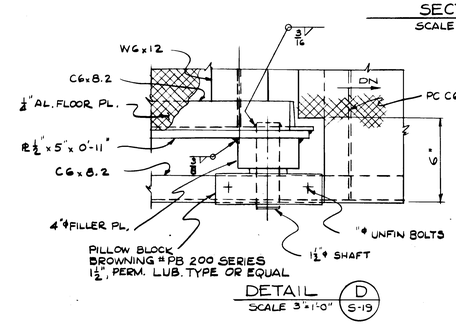

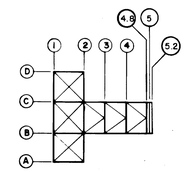

GRAPHIC SCALE

1" = 1'-0"

3" = 1'-0"

SYM.	ZONE	REVISIONS	DATE	APPROVED
2	G2-F1	DIM. REVISIONS	5-19-76	WHB 7/6/76

CONNELL ASSOCIATES, INC.
ARCHITECTS / ENGINEERS / PLANNERS
CORAL GABLES, FLORIDA

SIGNATURES	DATE
DESIGNED E. Stang	7-18-75
DRAWN M. Glusnick	7-18-75
CHECKED W. Buckley	7-18-75
SUBMITTED E. Stang	7-18-75
APPROVED	
APPROVED	
APPROVED E. Stang	7/23/75
APPROVED A.C. Fuessel	7/24/75
APPROVED E.W. Watts	7/24/75
APPROVED John D. Shelly	7-24-75

NATIONAL AERONAUTICS AND SPACE ADMINISTRATION
JOHN F. KENNEDY SPACE CENTER, NASA
KENNEDY SPACE CENTER, FLORIDA

NASA FLIGHT RESEARCH CENTER
EDWARDS AIR FORCE BASE, CALIFORNIA

ORBITER MATING DEVICE

ACCESS/SERVICE PLATFORM
ADJUSTABLE RAMP

FILE NO.	SIZE	DWG. NO.	REV.
	F	79K05459	
PROJ. NO. PCN 77211		SHEET 25 OF 63	

S-19

KSC FORM (F) 1-11A (REV. 1-68)

Orbiter Mating Device
Access/Service Platform
Adjustable Ramp

79K05459
SHT 25 of 63

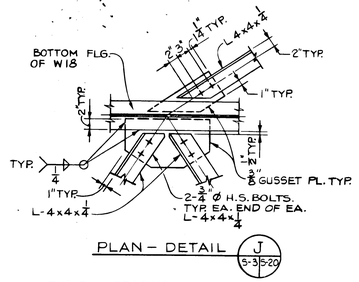

PLAN – DETAIL J (S-3/S-20)

TYPICAL BRACING END CONNECTION TO W18

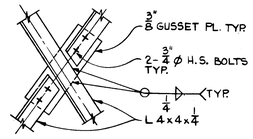

PLAN – DETAIL K (S-3/S-20)

TYPICAL BRACING INTERSECTION CONNECTION

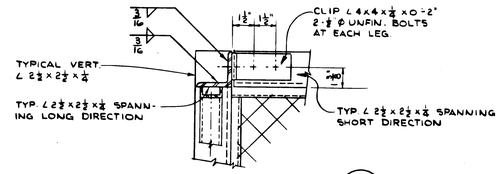

SECTION - TYPICAL DETAIL A (S-20)

3" = 1'-0"

TYPICAL ANGLE TO ANGLE CONNECTION AT TOP AND BOTTOM OF ENCLOSURE

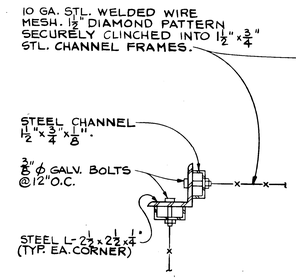

TYPICAL CORNER DETAIL

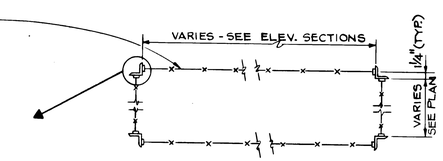

TYPICAL PLAN - SECTION OF CABLE ENCLOSURE

NO SCALE

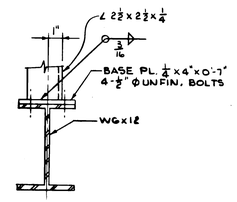

SECTION - TYPICAL DETAIL B (S-20)

3" = 1'-0"

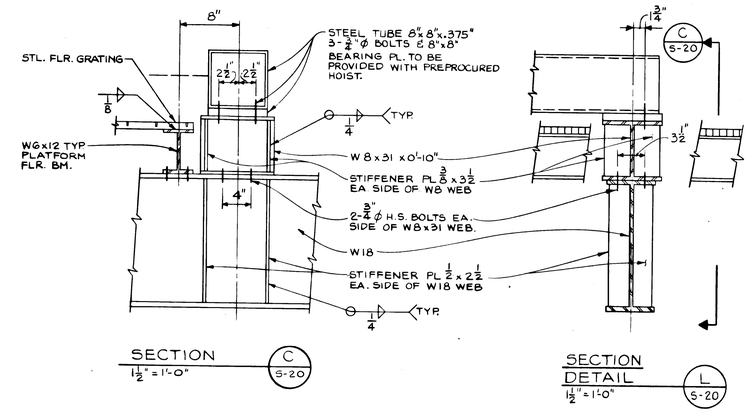

SECTION C (S-20)

1 1/2" = 1'-0"

SECTION DETAIL L (S-20)

1 1/2" = 1'-0"

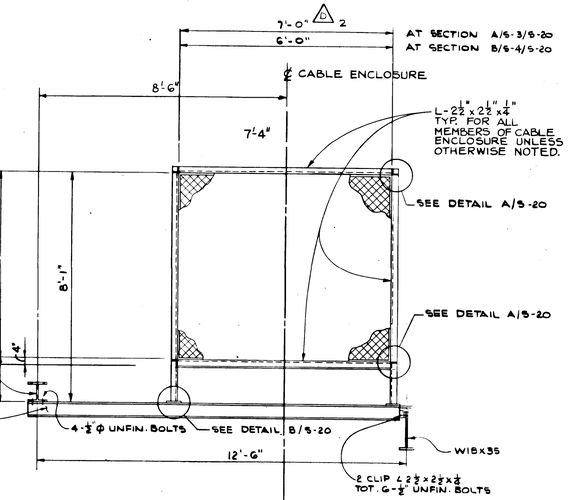

SECTION ELEVATION A (S-3/S-20) B (S-4/S-20)

1/2" = 1'-0"

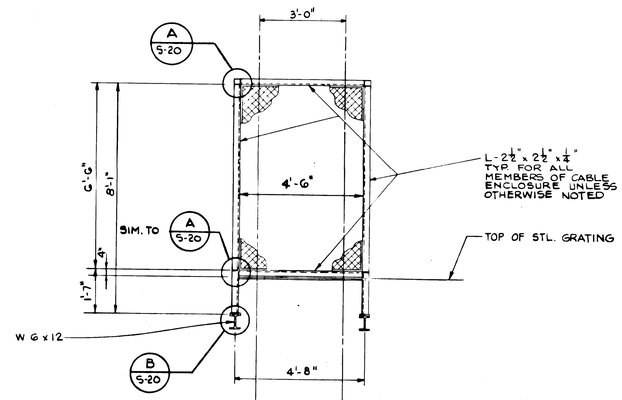

SECTION ELEVATION D (S-3/S-20) D (S-4/S-20)

1/2" = 1'-0"

SECTION AT LEVEL 20'-0" SHOWN
SAME AT LEVEL 40'-0"

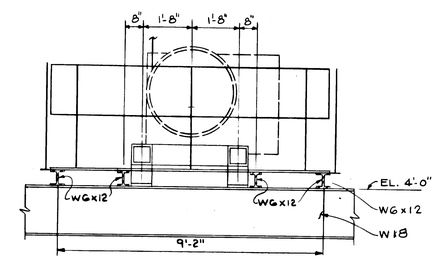

SECTION ELEVATION H (S-3/S-20)

1/2" = 1'-0"

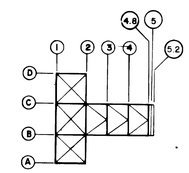

KEY PLAN

NO SCALE

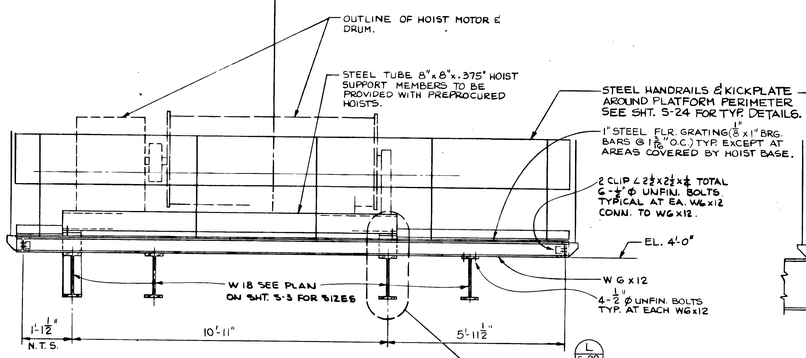

SECTION ELEVATION F (S-3/S-20)

1/2" = 1'-0"

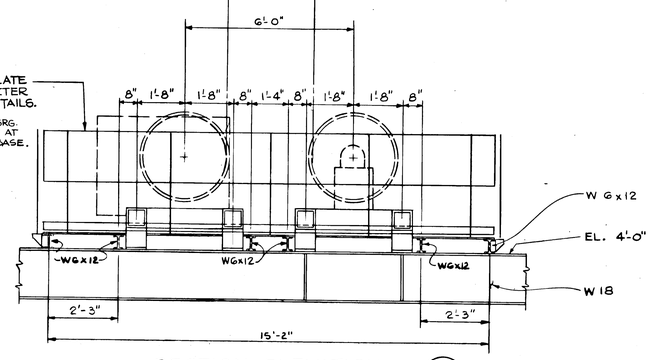

SECTION ELEVATION G (S-3/S-20)

1/2" = 1'-0"

GRAPHIC SCALE

1/2" = 1'-0" 6" 0 1 2 3 4 5

1-1/2" = 1'-0" 9" 6" 3" 0

3" = 1'-0" 0 3" 6" 9" 1

SYM.	ZONE	REVISIONS	DATE	APPROVED
2	DB,F7	DIM. REVISIONS	5-19-76	W.H.B. 7/6/76

CONNELL ASSOCIATES, INC.
ARCHITECTS / ENGINEERS / PLANNERS
CORAL GABLES, FLORIDA

SIGNATURES	DATE
DESIGNED E. Salinas	7-18-75
DRAWN	7-18-75
CHECKED W. Burkley	7-18-75
SUBMITTED	7-18-75
APPROVED	
APPROVED	
APPROVED	7/23/75
APPROVED	7/23/75
APPROVED	7/23/75
APPROVED	7-24-75

NATIONAL AERONAUTICS AND SPACE ADMINISTRATION
JOHN F. KENNEDY SPACE CENTER, NASA
KENNEDY SPACE CENTER, FLORIDA

NASA FLIGHT RESEARCH CENTER
EDWARDS AIR FORCE BASE, CALIFORNIA

ORBITER MATING DEVICE

CABLE ENCLOSURE PLANS, ELEVATIONS AND DETAILS

S-20

FILE NO.	SIZE	DWG. NO.	REV.
	F	79K05459	
PROJ. NO. PCN 77211		SHEET 26 OF 63	

Orbiter Mating Device
Cable Enclosure Plans, Elevations & Details

79K05459
SHT 26 of 63

KSC FORM (F) 1-11A (REV. 1-68)

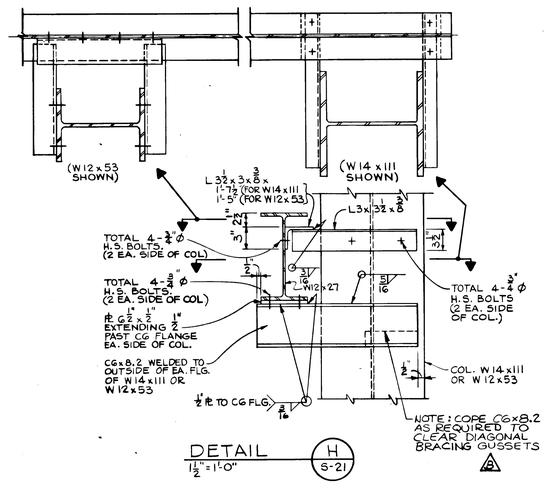

DETAIL H S-21
1½" = 1'-0"

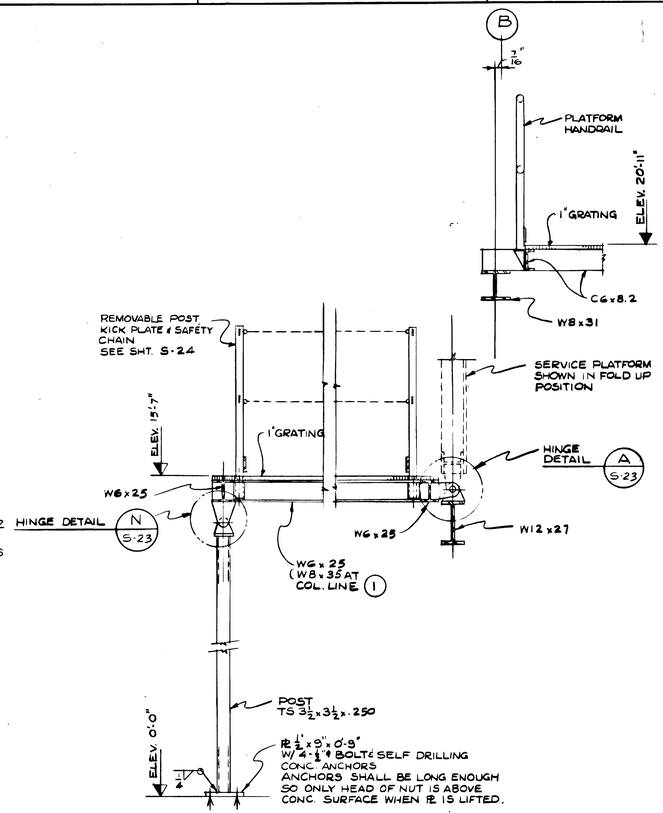

SECTION A S-21
SCALE 3/4" = 1'-0"

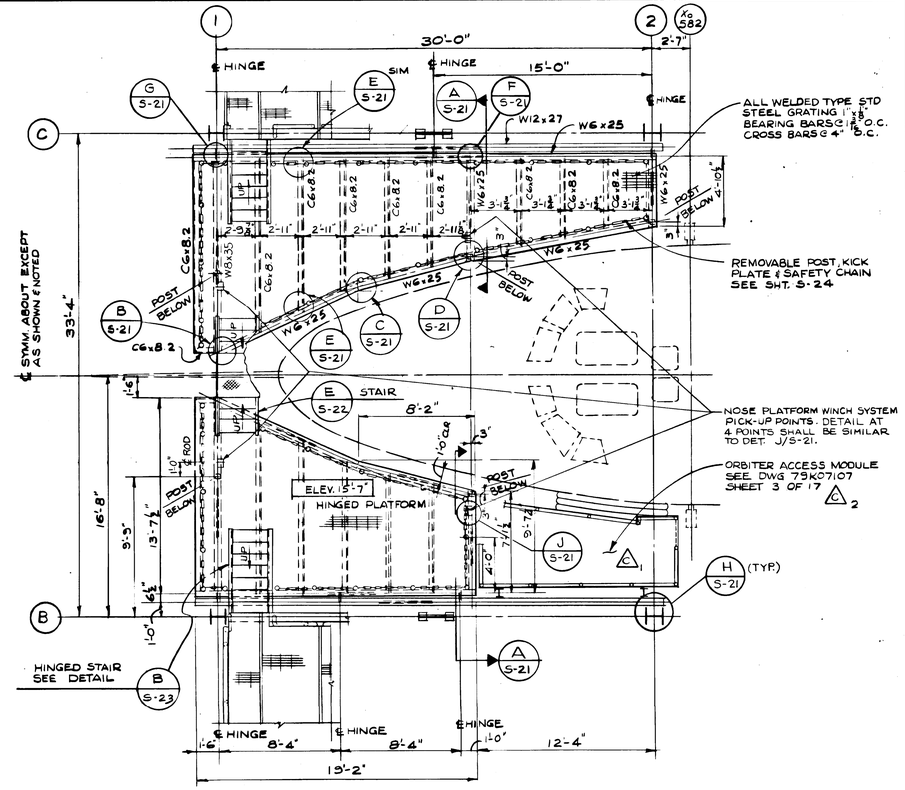

PLAN-ELEVATION 15'-7"
SCALE 1/4" = 1'-0"

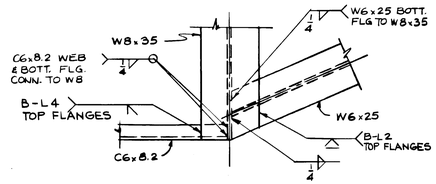

DETAIL B S-21 S-22
SCALE 1½" = 1'-0"

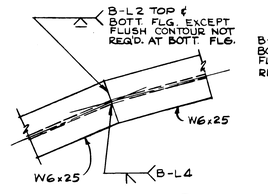

DETAIL C S-21 S-22
SCALE 1½" = 1'-0"
TYP. SPLICE AT BEND IN EDGE MEMBER

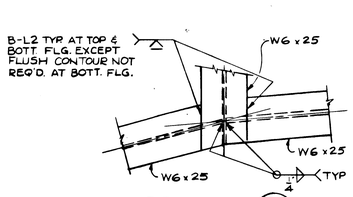

DETAIL D S-21 S-22
SCALE 1½" = 1'-0"

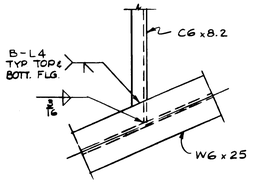

DETAIL E S-21 S-22
SCALE 1½" = 1'-0"

NOTE: ALL ELEVATIONS INDICATED REFER TO TOP OF COL. CONC. PEDESTAL AS REFERENCE EL. 0'-0"

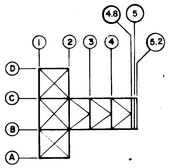

KEY PLAN
NO SCALE

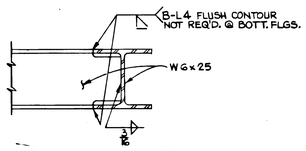

DETAIL F S-21
1½" = 1'-0"

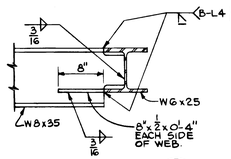

DETAIL G S-21
1½" = 1'-0"

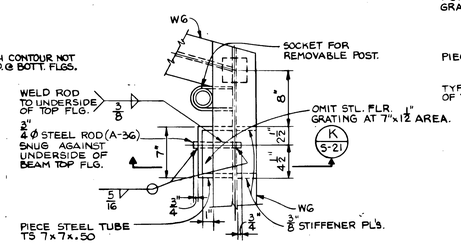

PLAN — DETAIL J S-21
1½" = 1'-0"

TYPICAL PICK UP POINT DETAIL

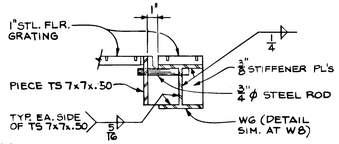

SECTION K S-21
1½" = 1'-0"

GRAPHIC SCALE

1/4" = 1'-0" 0 1' 2' 4' 6' 8' 10' 12'
3/4" = 1'-0" 0 6" 1' 2' 3' 4'
1-1/2" = 1'-0" 1 9" 6" 3" 0

SYM	ZONE	REVISIONS	DATE	APPROVED
2	F-7	ORBITER ACCESS MODULE ADDED	5-6-76	WHB
1	F-7	NOTE ADDED	9-30-75	

CONNELL ASSOCIATES, INC.
ARCHITECTS / ENGINEERS / PLANNERS
CORAL GABLES, FLORIDA

SIGNATURES	DATE
DESIGNED	7-18-75
DRAWN	7-18-75
CHECKED	7-18-75
SUBMITTED	7-18-75
APPROVED	
APPROVED	
APPROVED	7/24/75
APPROVED	7/25/75
APPROVED	7/25/75
APPROVED	7-24-75

NATIONAL AERONAUTICS AND SPACE ADMINISTRATION
JOHN F. KENNEDY SPACE CENTER, NASA
KENNEDY SPACE CENTER, FLORIDA

NASA FLIGHT RESEARCH CENTER
EDWARDS AIR FORCE BASE, CALIFORNIA

ORBITER MATING DEVICE

NOSE ACCESS PLATFORM
ELEVATION 15'-7"

S-21

FILE NO.	SIZE	DWG. NO.	REV.
	F	79K05459	
PROJ. NO. PCN 77211		SHEET 27 OF 63	

Orbiter Mating Device
Nose Access Platform
Elevation 15'-7"

79K05459
SHT. 27 of 63

KBC FORM (F) 1-11A (REV. 1-68)

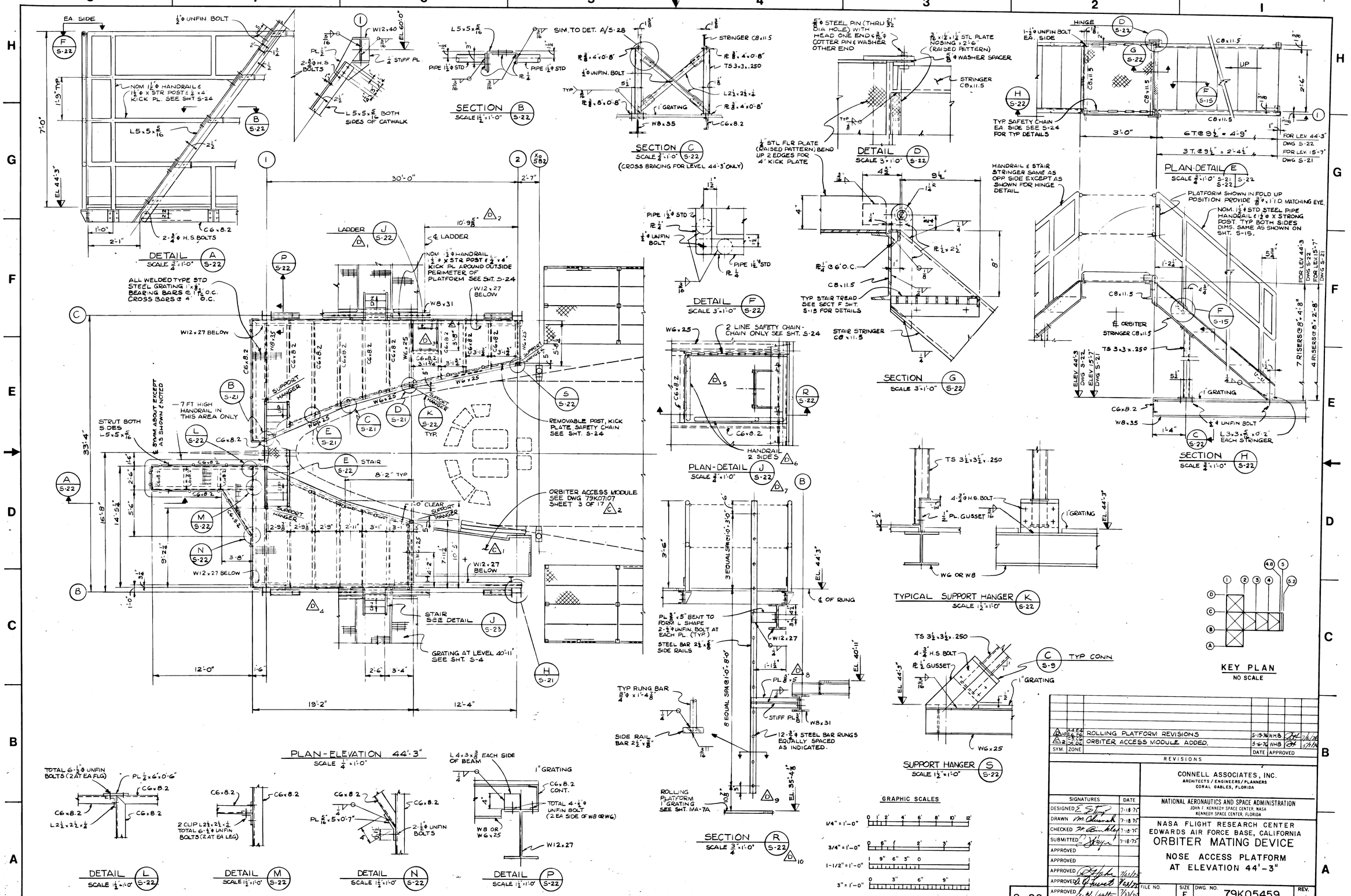

Orbiter-Mating Device
Nose Access Platform @
Elevation 44'-3"

79K05459
SHT 28 of 63

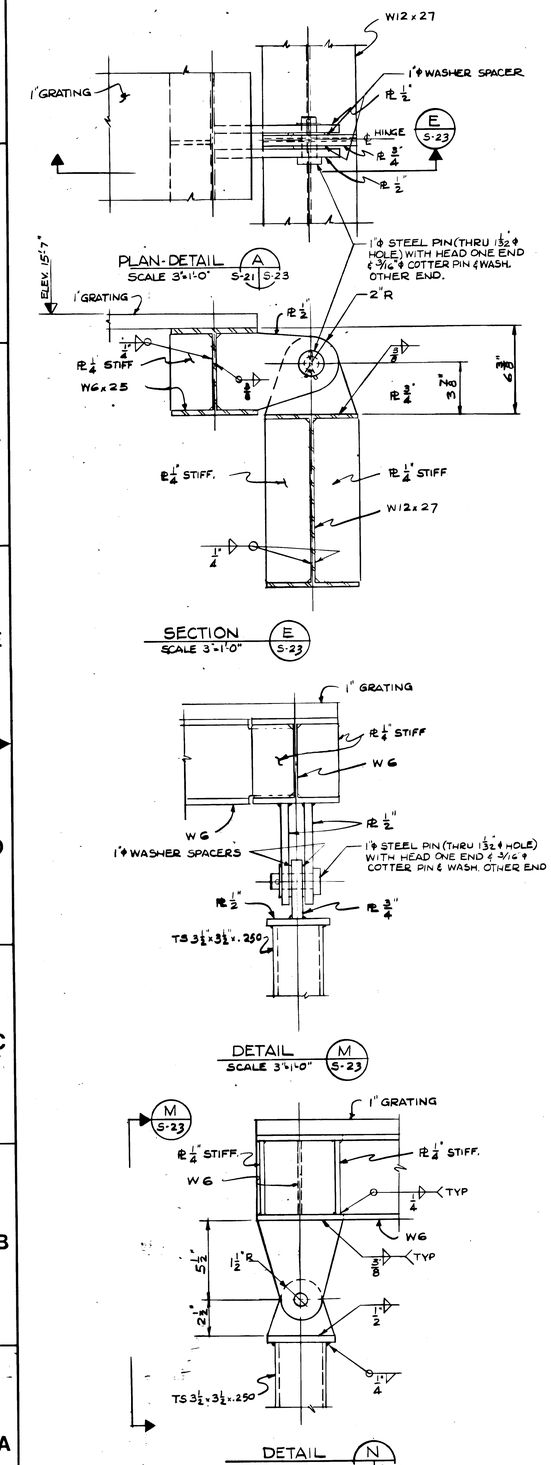

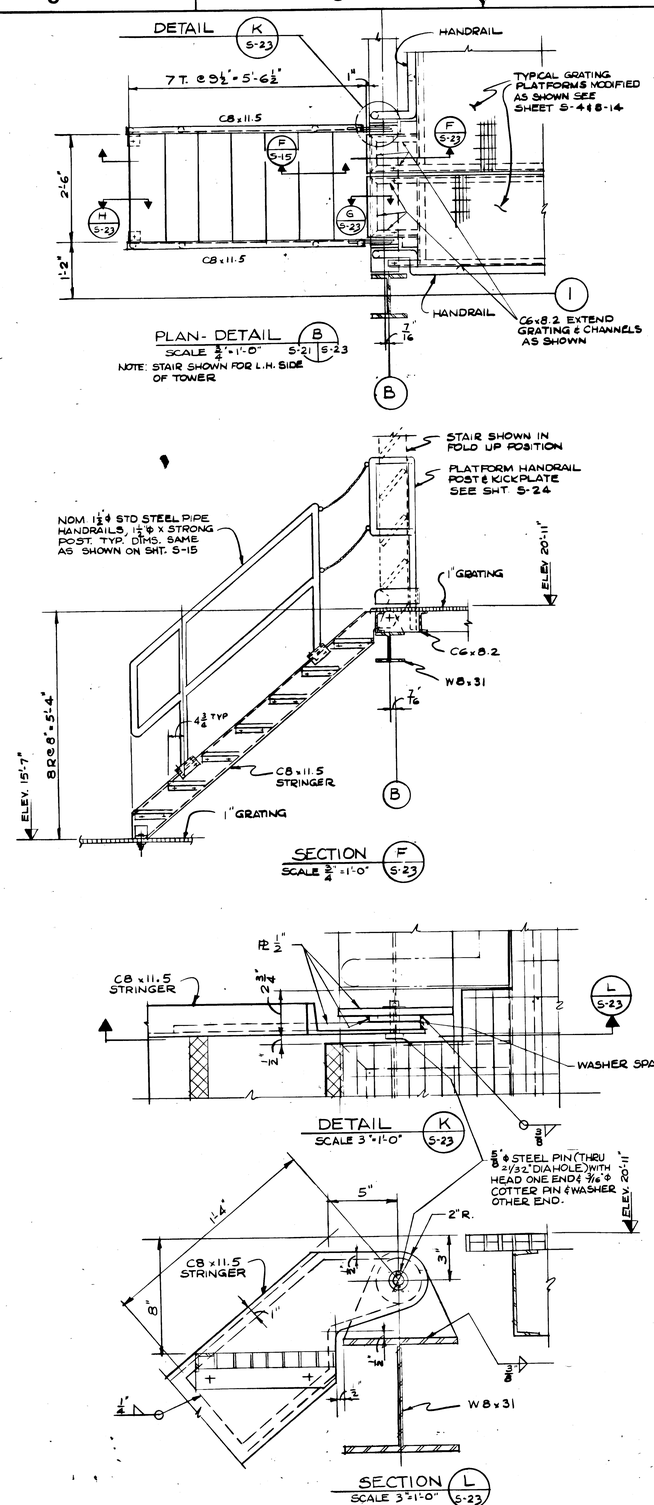

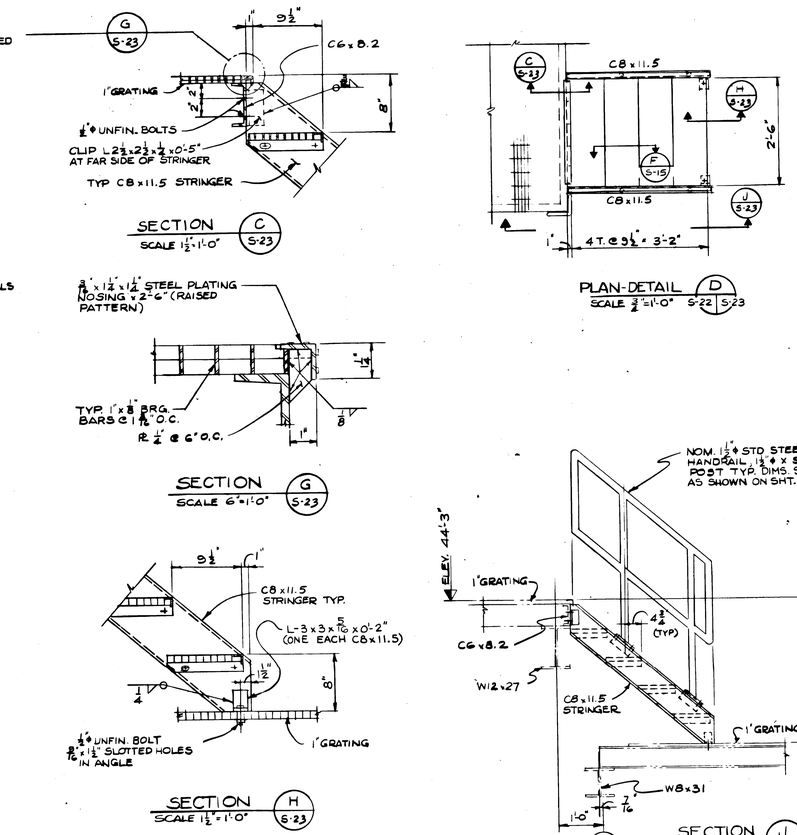

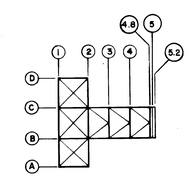

KEY PLAN
NO SCALE

GRAPHIC SCALE

3/4" = 1'-0"
1 1/2" = 1'-0"
3" = 1'-0"
6" = 1'-0"

SYM.	ZONE		DATE	APPROVED

REVISIONS

CONNELL ASSOCIATES, INC.
ARCHITECTS / ENGINEERS / PLANNERS
CORAL GABLES, FLORIDA

SIGNATURES	DATE
DESIGNED	7-18-75
DRAWN	7-18-75
CHECKED	7-18-75
SUBMITTED	7-18-75
APPROVED	
APPROVED	
APPROVED	7/23/75
APPROVED	7/23/75
APPROVED	7/23/75
APPROVED	7-24-75

NATIONAL AERONAUTICS AND SPACE ADMINISTRATION
JOHN F. KENNEDY SPACE CENTER NASA
KENNEDY SPACE CENTER, FLORIDA

NASA FLIGHT RESEARCH CENTER
EDWARDS AIR FORCE BASE, CALIFORNIA

ORBITER MATING DEVICE

NOSE ACCESS PLATFORM STAIRS & TYPICAL DETAILS

FILE NO.	SIZE	DWG. NO.	REV.
	F	79K05459	
PROJ. NO. PCN 77211		SHEET 29 OF 63	

S-23

Orbiter Mating Device
Nose Access Platform @
Stairs + Typical Details

79K05459
SHT 29 of 63

KSC FORM (F) 1-11A (REV. 1-68)

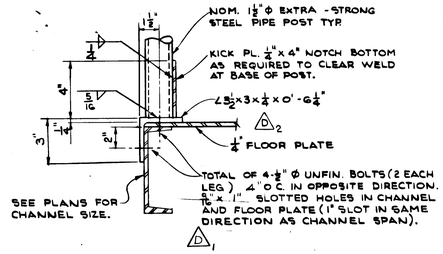

SECTION - TYPICAL DETAIL (A / S-24)

TYPICAL HANDRAIL POST CONNECTION TO RAMPS AND PLATFORMS WITH ¼" FL. PLATE

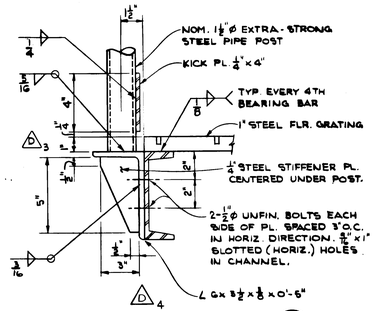

SECTION - TYPICAL DETAIL (B / S-24)
3" = 1'-0"

TYPICAL HANDRAIL POST CONNECTION TO CATWALK AND PLATFORM UNITS WITH 1" STEEL FLOOR GRATING

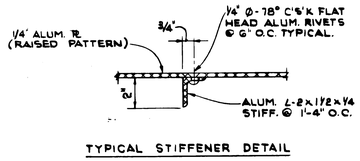

TYPICAL STIFFENER DETAIL

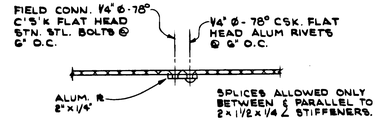

FIELD SPLICE

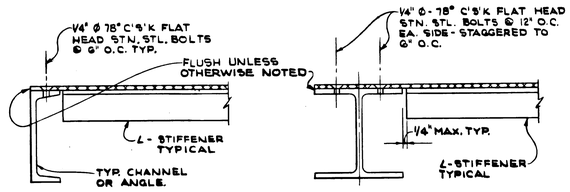

AT EDGE MEMBERS

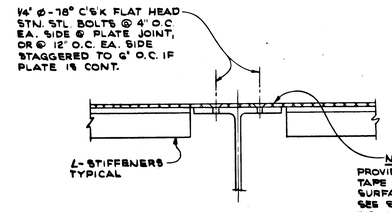

AT INTERIOR MEMBERS

NOTE: AT ALL ALUM. PLATE PROVIDE DIELECTRIC INSULATION SHEET OR TAPE MATERIAL BETWEEN ALL CONTACT SURFACES OF ALUMINUM AND CARBON STEEL. SEE SPECIFICATIONS FOR THE DIELECTRIC INSULATION MATERIAL REQUIREMENTS. AFTER ASSEMBLY ALL FAYING SURFACES & EDGES BETWEEN ALUM. & CARBON STEEL SHALL BE CONT. SEALED WITH SEALANT PER SPECIFICATIONS.

TYPICAL ALUMINUM FLOOR PLATE DETAILS

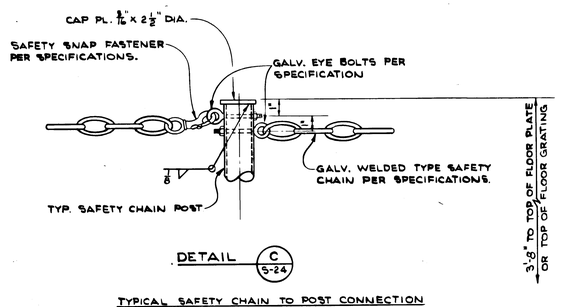

DETAIL (C / S-24)

TYPICAL SAFETY CHAIN TO POST CONNECTION CONN. TO STRUCTURAL SHAPES & TUBING SIMILAR

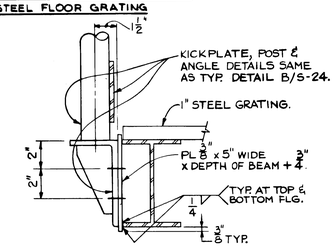

SECTION – TYPICAL DETAIL (F / S-24)
3" = 1'-0"

TYPICAL HANDRAIL POST CONN. TO W6x12 DETAIL SIMILAR AT W8 MEMBERS.

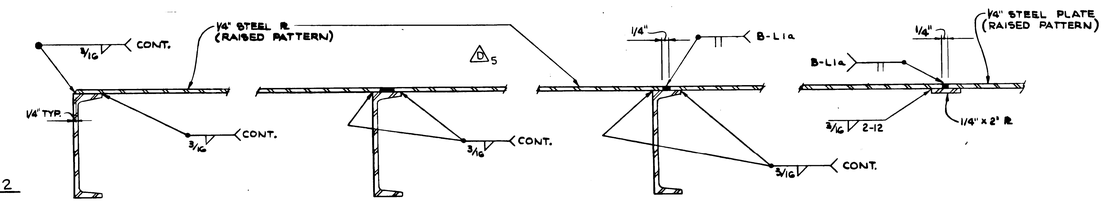

AT PERIMETER BEAM — CONTINUOUS OVER INTERIOR MEMBERS — DISCONTINUOUS OVER INTERIOR MEMBERS — FIELD SPLICE

TYPICAL STEEL FLOOR PLATE DETAILS
NO SCALE

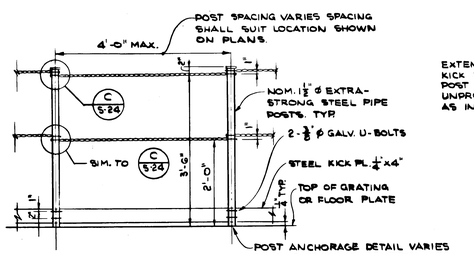

ELEVATION
TYPICAL SAFETY CHAIN AND POST DETAILS
¾" = 1'-0"

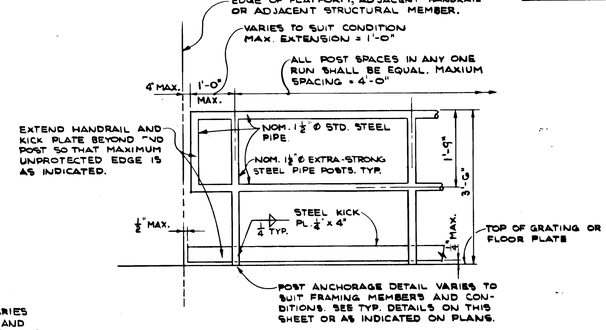

ELEVATION
TYPICAL STEEL HANDRAIL DETAILS
¾" = 1'-0"

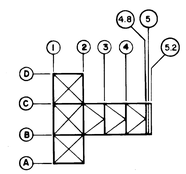

KEY PLAN
NO SCALE

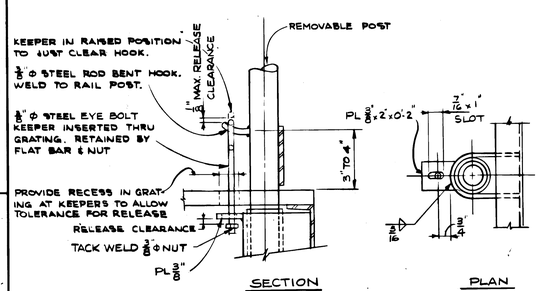

TYPICAL SAFETY KEEPER DETAIL FOR REMOVABLE POSTS (D / S-24)

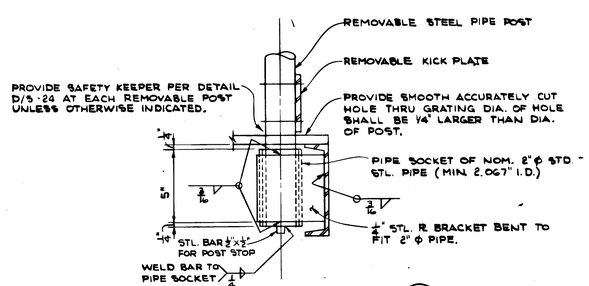

SECTION TYPICAL DETAIL (E / S-24)

TYPICAL SOCKET DETAIL FOR REMOVABLE POSTS DETAIL AT CHANNEL SHOWN TYPICAL AT WIDE FLANGE SHAPES

GRAPHIC SCALE
3/4" = 1'-0"
3" = 1'-0"

SYM.	ZONE		DATE	APPROVED
5	E-6 G-6	MISCL. REVISIONS.	5-13-76	WHB

REVISIONS

CONNELL ASSOCIATES, INC.
ARCHITECTS / ENGINEERS / PLANNERS
CORAL GABLES, FLORIDA

NATIONAL AERONAUTICS AND SPACE ADMINISTRATION
JOHN F. KENNEDY SPACE CENTER, NASA
KENNEDY SPACE CENTER, FLORIDA

NASA FLIGHT RESEARCH CENTER
EDWARDS AIR FORCE BASE, CALIFORNIA

ORBITER MATING DEVICE

TYPICAL DETAILS & MISCELLANEOUS DETAILS

SIGNATURES	DATE
DESIGNED	7-18-75
DRAWN	7-18-75
CHECKED	7-18-75
SUBMITTED	7-18-75
APPROVED	
APPROVED	
APPROVED	7/23/76
APPROVED	7/23/75
APPROVED	7/23/76
APPROVED	7-24-76

S-24

FILE NO.	SIZE	DWG. NO.	REV.
	F	79K05459	
PROJ. NO. PCN 77211		SHEET 30 OF 63	

Orbiter Mating Device
Typical Details & Miscellaneous Details

79K05459
SHT. 30 of 63

KSC FORM (F) 1-11A (REV. 1-68)

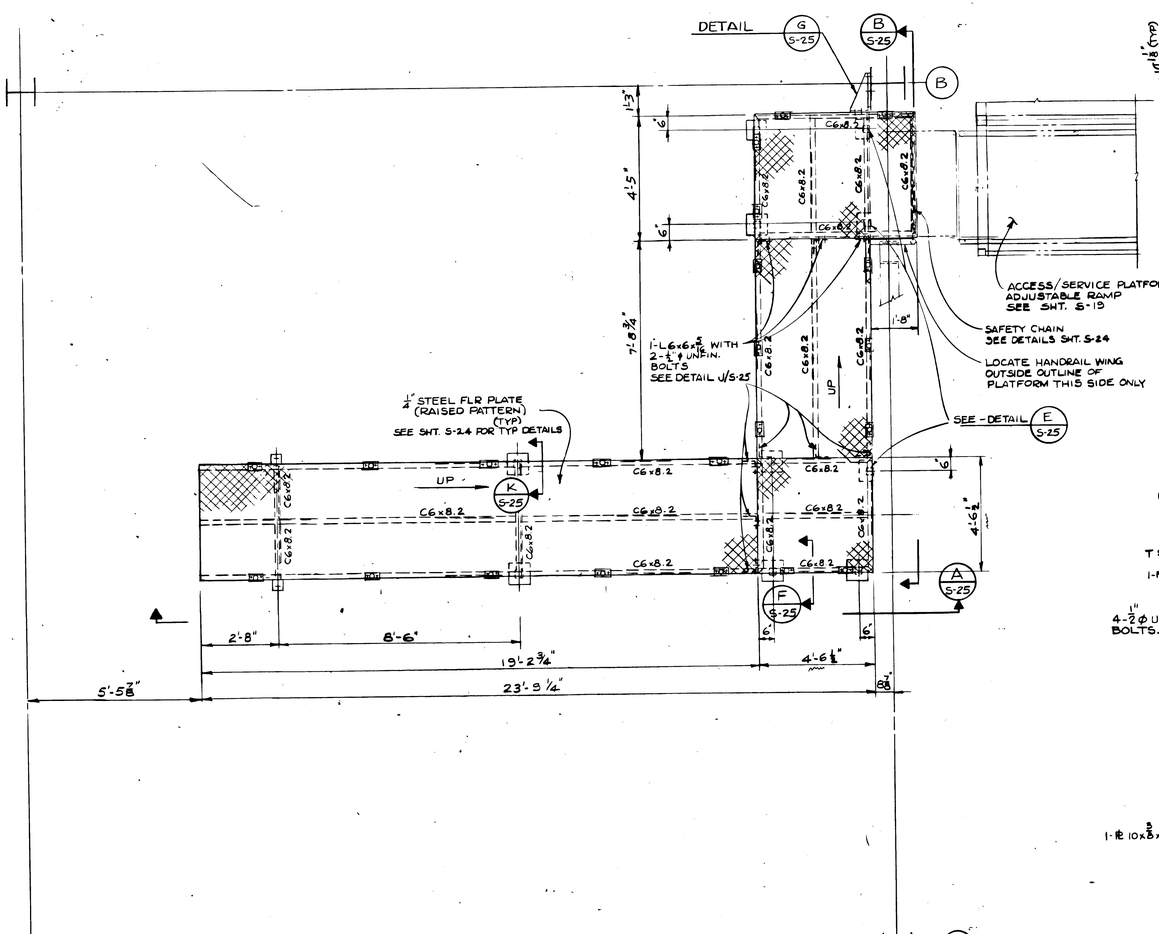

PLAN
RAMP TO ACCESS/SERVICE PLATFORM
SCALE 1/2" = 1'-0"
L.H. SIDE OF TOWER (AS SHOWN)
R.H. SIDE OF TOWER (OPP. HAND)

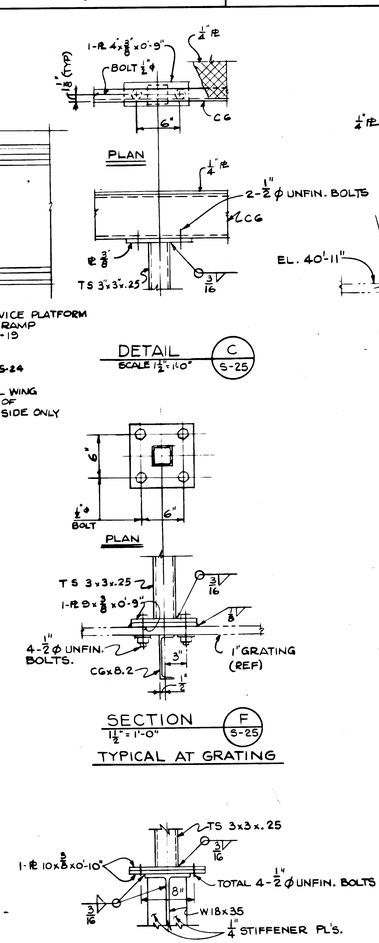

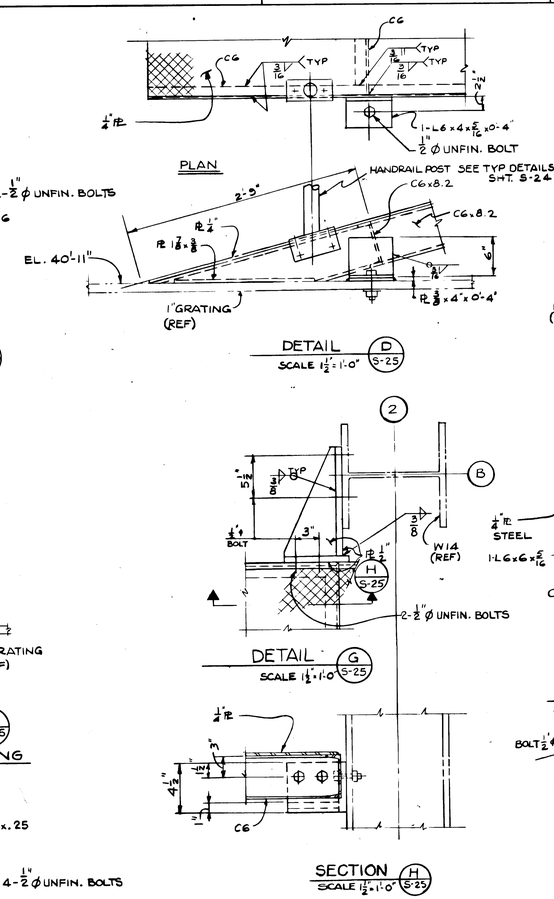

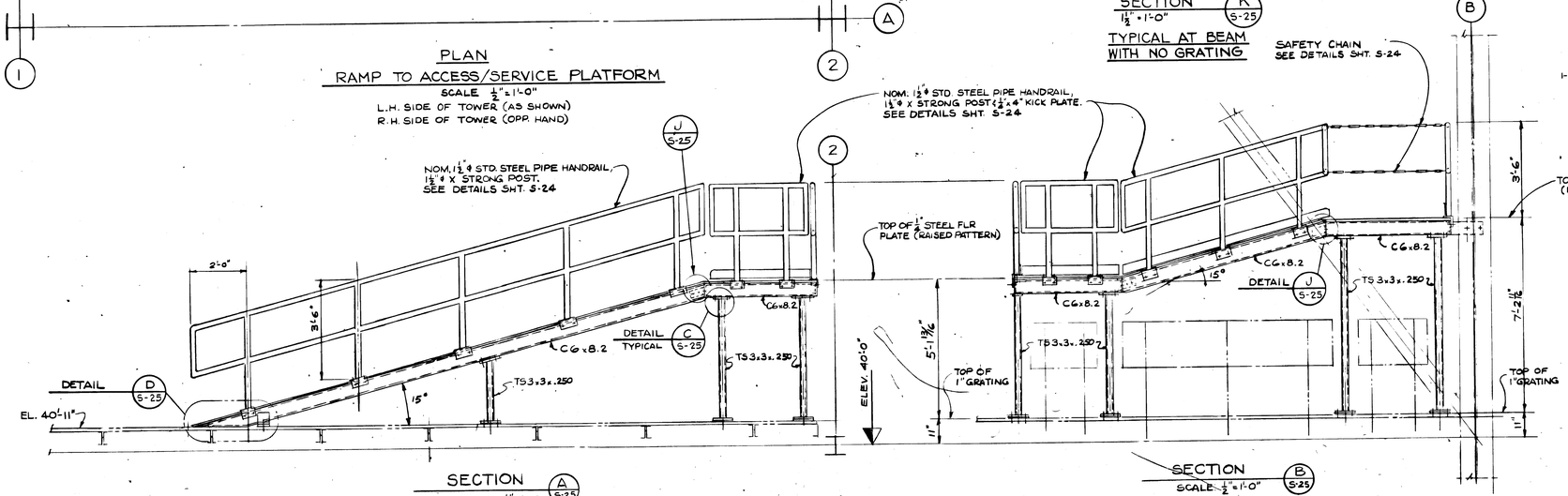

GRAPHIC SCALE
1/2" = 1'-0"
1-1/2" = 1'-0"

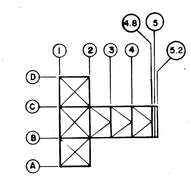

SYM.	ZONE	REVISIONS	DATE	APPROVED

CONNELL ASSOCIATES, INC.
ARCHITECTS / ENGINEERS / PLANNERS
CORAL GABLES, FLORIDA

SIGNATURES	DATE
DESIGNED E. Fahy	7-18-75
DRAWN M. Chusak	7-18-75
CHECKED M. Quinlivy	7-18-75
SUBMITTED J. Hooper	
APPROVED	
APPROVED	
APPROVED	7/23/75
APPROVED	7/23/75
APPROVED	7/23/75
APPROVED	7-24-75

NATIONAL AERONAUTICS AND SPACE ADMINISTRATION
JOHN F. KENNEDY SPACE CENTER, NASA
KENNEDY SPACE CENTER, FLORIDA

NASA FLIGHT RESEARCH CENTER
EDWARDS AIR FORCE BASE, CALIFORNIA

ORBITER MATING DEVICE
RAMP TO ACCESS/SERVICE PLATFORM
PLAN & DETAILS

S-25

FILE NO.	SIZE	DWG. NO.	REV.
	F	79K05459	
PROJ. NO. PCN 77211		SHEET 31 OF 63	

Orbiter Mating Device
Ramp to Access/Service
Platform Plan + Details

79K05459
SHT 31 of 63

KSC FORM (F) 1-11A (REV. 1-68)

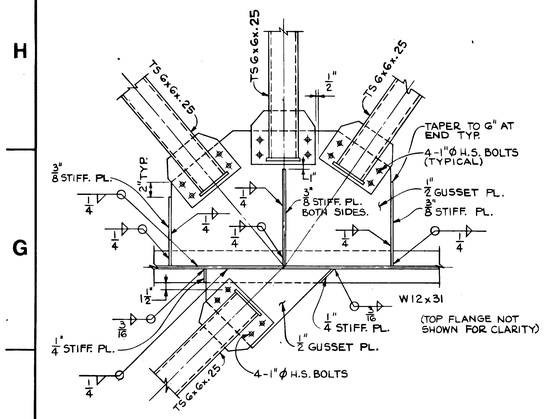

DETAIL D (5-5 | 5-26) 1" = 1'-0"

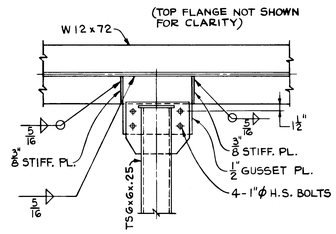

DETAIL E (5-5 | 5-26) 1" = 1'-0"

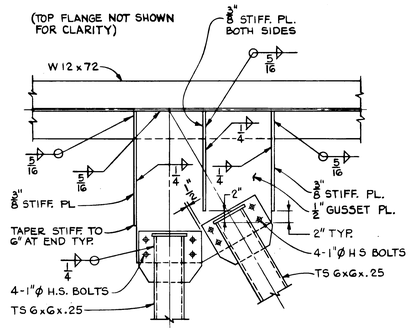

DETAIL F (5-5 | 5-26) 1" = 1'-0"

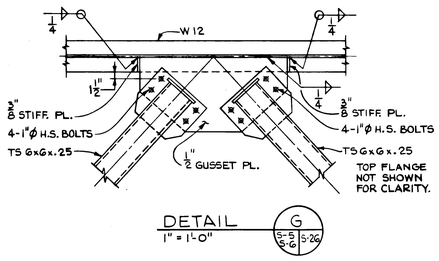

DETAIL G (5-5 | 5-26) 1" = 1'-0"

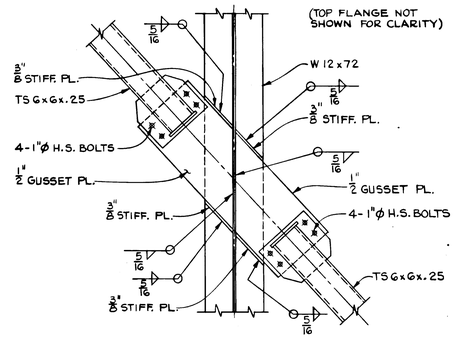

DETAIL H (5-6 | 5-26) 1" = 1'-0"

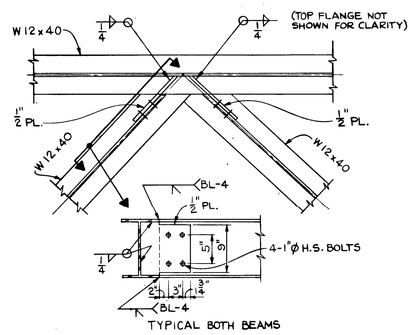

TYPICAL BOTH BEAMS

DETAIL J (5-6 | 5-26) 1" = 1'-0"

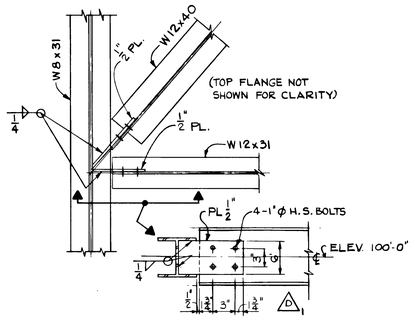

DETAIL K (5-6 | 5-26) 1" = 1'-0"

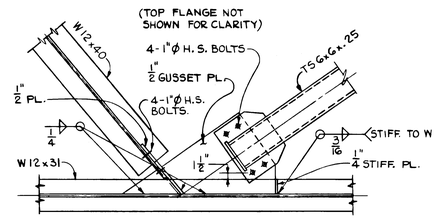

SEE STD. W12 TO W12 CONNECTION

DETAIL L (5-6 | 5-26) 1" = 1'-0"

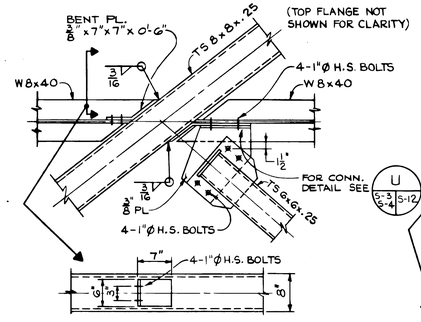

DETAIL R (5-6 | 5-26) 1" = 1'-0"

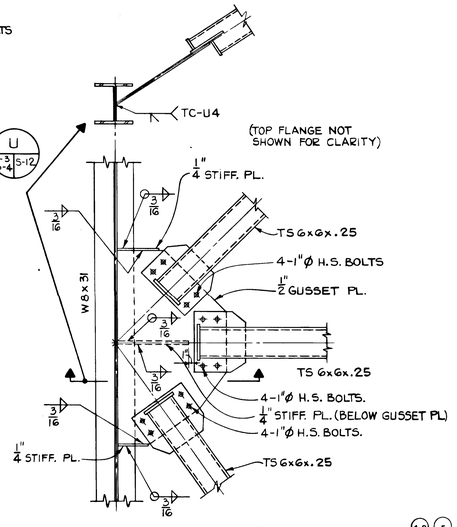

DETAIL S (5-6 | 5-26) 1" = 1'-0"

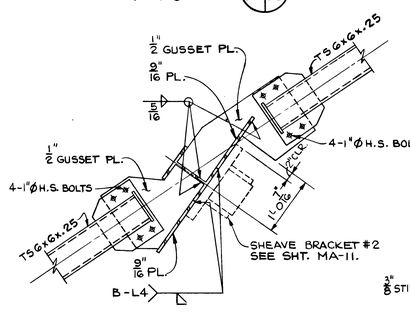

DETAIL T (5-6 | 5-26) 1" = 1'-0"

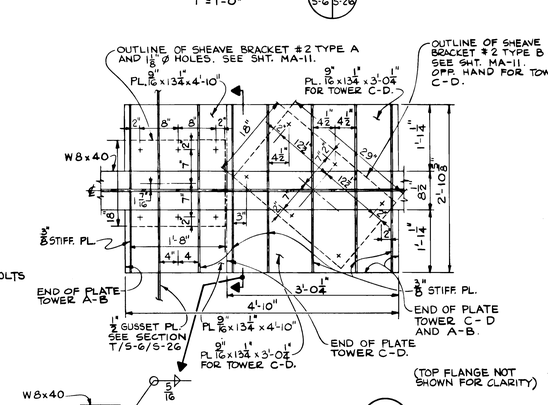

DETAIL U (5-6 | 5-26) 1" = 1'-0"

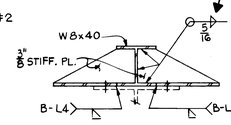

TYPICAL SECTION AT STIFFENER PL
1" = 1'-0"

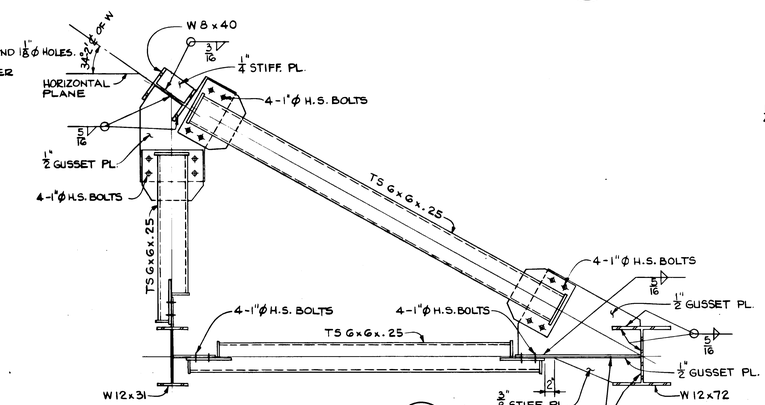

DETAIL J (5-5 | 5-26) 1" = 1'-0"

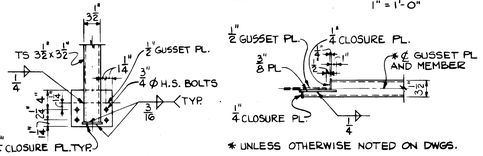

TYPICAL END DETAIL FOR TS $3\frac{1}{2}$ x $3\frac{1}{2}$ OR TS 3x3 WITH $\frac{3}{4}$" ϕ H.S. BOLTS

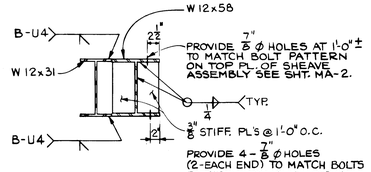

SECTION X (5-6 | 5-26) 1" = 1'-0"

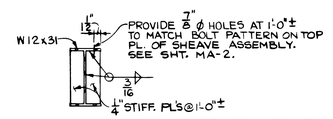

TYPICAL AT SHEAVE ASSEMBLY PL.

SECTION Y (5-6 | 5-26) 1" = 1'-0"

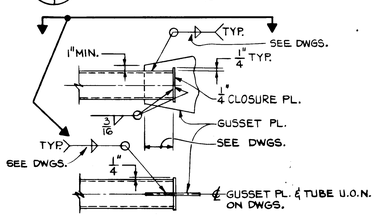

TYPICAL WELDED TUBING END
1" = 1'-0"

GRAPHIC SCALE
1" = 1'-0" 6" 0 2

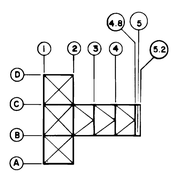

KEY PLAN
NO SCALE

SYM.	ZONE		DATE	APPROVED
1	E6	MISCL. REVISION ℄ ELEV. OF MEMBER REV.	5-13-76	W.H.B. 7/6/76

REVISIONS

CONNELL ASSOCIATES, INC.
ARCHITECTS / ENGINEERS / PLANNERS
CORAL GABLES, FLORIDA

SIGNATURES	DATE
DESIGNED	7-18-75
DRAWN	7-18-75
CHECKED	7-18-75
SUBMITTED	7-18-75
APPROVED	
APPROVED	
APPROVED	7/23/75
APPROVED	7/23/75
APPROVED	7/23/75
APPROVED	7-24-75

NATIONAL AERONAUTICS AND SPACE ADMINISTRATION
JOHN F. KENNEDY SPACE CENTER, NASA
KENNEDY SPACE CENTER, FLORIDA

NASA FLIGHT RESEARCH CENTER
EDWARDS AIR FORCE BASE, CALIFORNIA

ORBITER MATING DEVICE

STRUCTURAL SECTIONS AND DETAILS

S-26

FILE NO.	SIZE	DWG. NO.	REV.
	F	79K05459	
PROJ. NO. PCN 77211		SHEET 32 OF 63	

Orbiter Mating Device
Structural Sections and Details

79K05459
SHT. 32 of 63

KBC FORM (P) 1-11A (REV. 1-68)

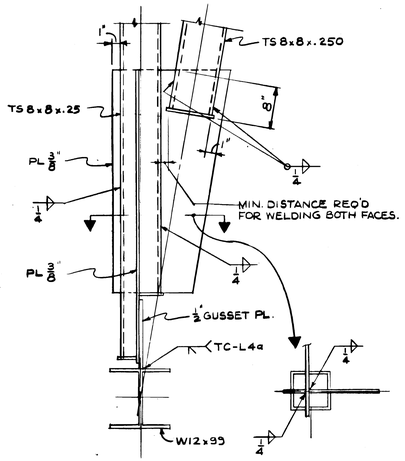

SECTION H (S11 | S27)
1"=1'-0"

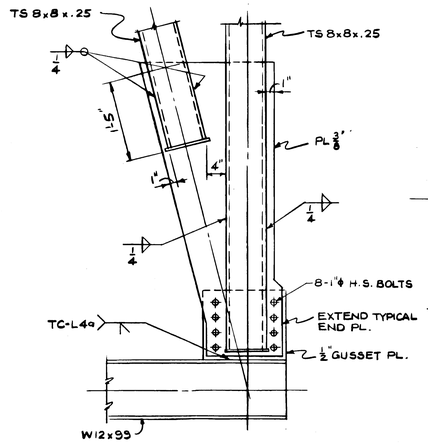

SECTION M (S8 | S27)
1"=1'-0"

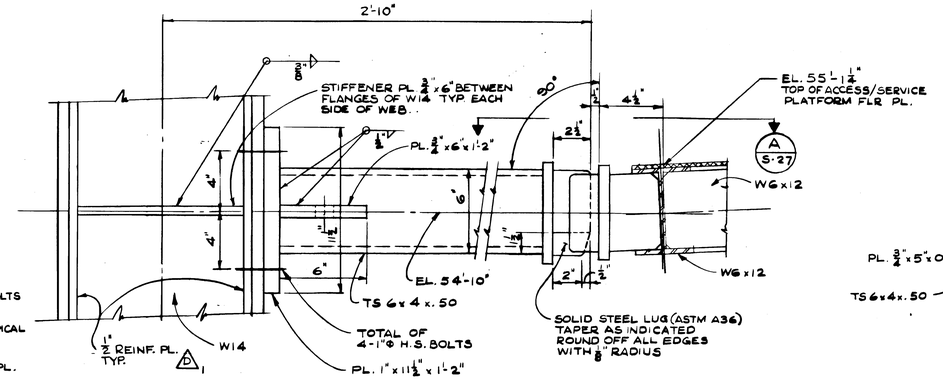

SECTION H (S-16 | S-27)
3"=1'-0"

FWD LONGITUDINAL TIE DOWN FOR 40 KNOT WIND

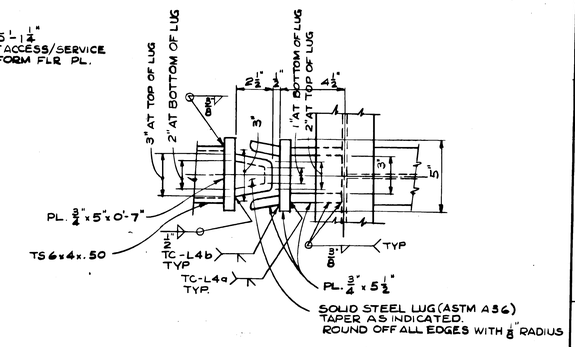

PLAN A (S-27)
3"=1'-0"

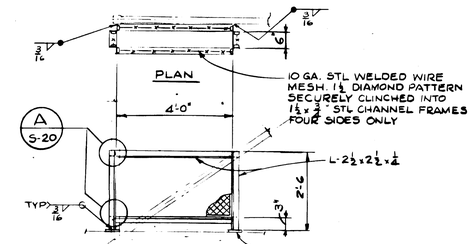

DETAIL C (S16 | S27 | S17)
1/2"=1'-0"

POST STORAGE BIN

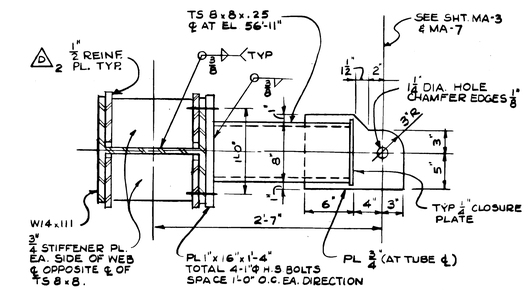

PLAN - SECTION T (S8 | S27)
1 1/2"=1'-0"

FORWARD HORIZONTAL TIE-DOWN SUPPORT BRACKET FOR 40 KNOT WIND CONDITION

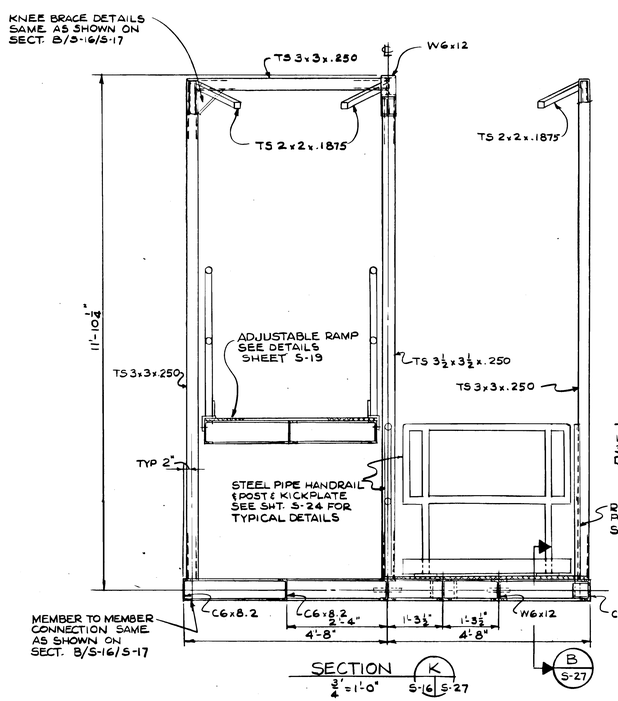

SECTION K (S-16 | S-27)
3/4"=1'-0"

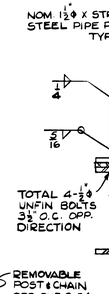

SECTION B (S-27)
3"=1'-0"

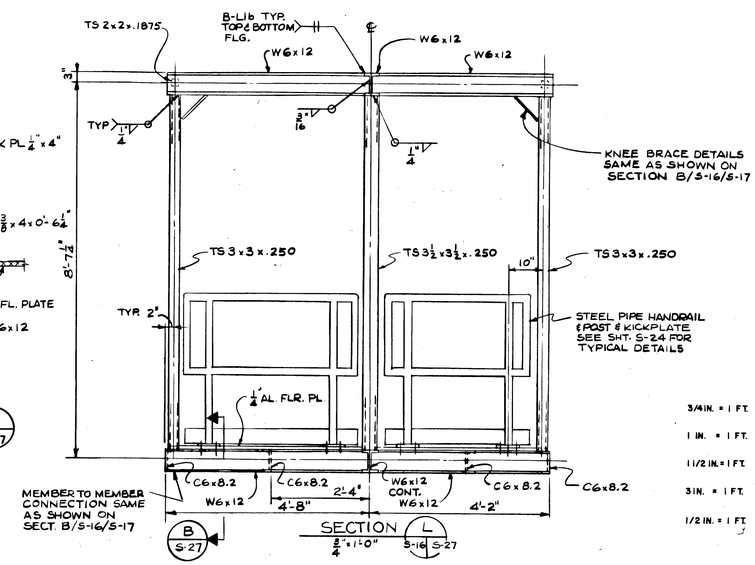

SECTION L (S-16 | S-27)
3/4"=1'-0"

GRAPHIC SCALE

3/4 IN. = 1 FT.
1 IN. = 1 FT.
1 1/2 IN. = 1 FT.
3 IN. = 1 FT.
1/2 IN. = 1 FT.

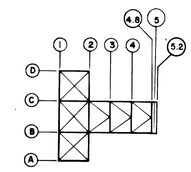

KEY PLAN
NO SCALE

SYM.	ZONE		DATE	APPROVED
2	F5, E2	MEMBER REINF. REVISIONS.	5-19-76	W.H.B. 7/6/76

REVISIONS

CONNELL ASSOCIATES, INC.
ARCHITECTS / ENGINEERS / PLANNERS
CORAL GABLES, FLORIDA

SIGNATURES	DATE
DESIGNED E. String	7-18-75
DRAWN M. Chinnah	7-18-75
CHECKED M. Winkley	7-18-75
SUBMITTED D. Harper	7-18-75
APPROVED	
APPROVED	
APPROVED	7/22/75
APPROVED	7/22/75
APPROVED	7/24/75
APPROVED	7-24-75

NATIONAL AERONAUTICS AND SPACE ADMINISTRATION
JOHN F. KENNEDY SPACE CENTER, NASA
KENNEDY SPACE CENTER, FLORIDA

NASA FLIGHT RESEARCH CENTER
EDWARDS AIR FORCE BASE, CALIFORNIA

ORBITER MATING DEVICE

STRUCTURAL SECTIONS & DETAILS

S-27

TILE NO.	SIZE	DWG. NO.	REV.
	F	79K05459	
PROJ. NO. PCN 77211		SHEET 33 of 63	

KBC FORM (F) 1-11A (REV. 1-69)

Orbiter Mating Device
Structural Sections and Details

79K05459
SHT. 33 of 63

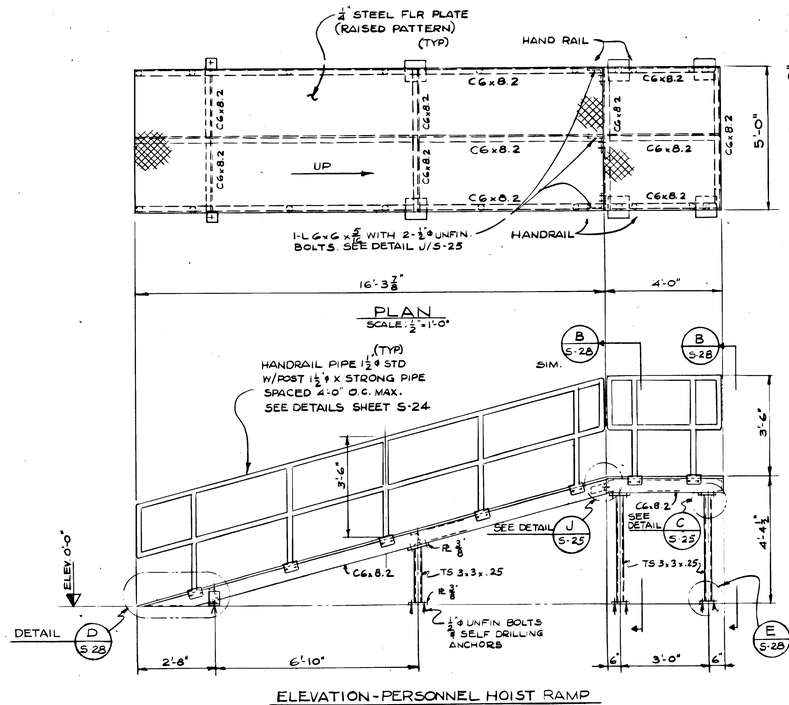

PLAN
SCALE: 1/2"=1'-0"

ELEVATION - PERSONNEL HOIST RAMP
SCALE 1/2"=1'-0"

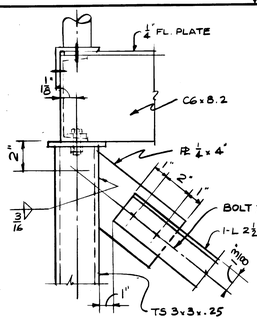

DETAIL A S-28
SCALE: 3"=1'-0"

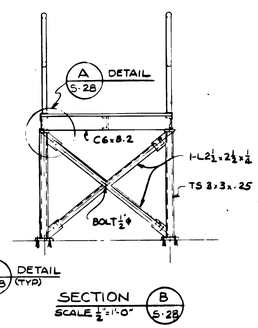

SECTION B S-28
SCALE 1/2"=1'-0"

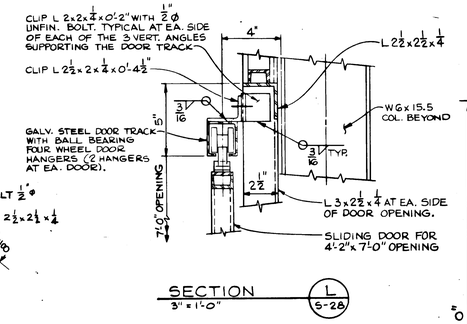

SECTION L S-28
3" = 1'-0"

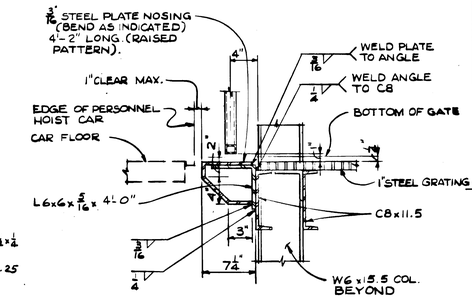

SECTION C S-28
SCALE 1 1/2"=1'-0"

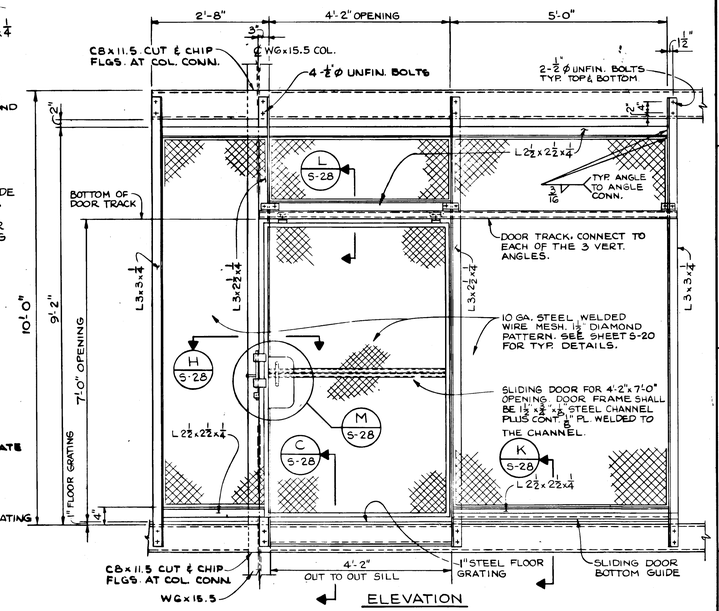

ELEVATION

TYPICAL SAFETY SCREEN & HOISTWAY SLIDING DOOR AT PERSONNEL HOIST LANDINGS AT EL. 20'-11", 40'-11" & 60'-11"
3/4" = 1'-0"

NOTE: THE SLIDING DOOR CONSTRUCTION & ITS COMPONENTS AS SHOWN ARE TO INDICATE GENERAL REQUIREMENTS ONLY. ACTUAL DOOR CONSTRUCTION AND SLIDING DOOR COMPONENTS SUCH AS THE DOOR TRACK, BALL BEARING DOOR HANGERS, BOTTOM GUIDE, REINFORCING PLATES, SLIDING BAR LOCK, GUIDES & KEEPERS, ETC SHALL BE DOOR MANUFACTURER'S STANDARD PRODUCTS FOR HEAVY DUTY, EXPOSED-TO-WEATHER SERVICE.

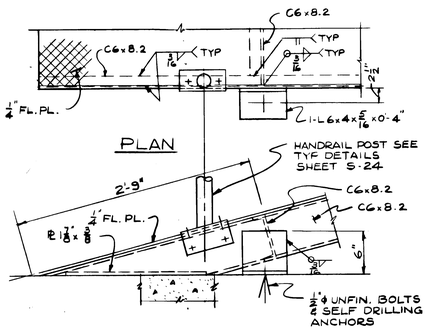

PLAN

DETAIL D S-28
SCALE 1 1/2"=1'-0"

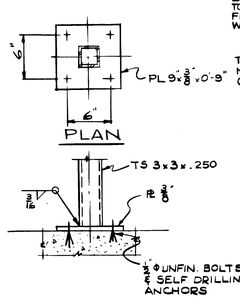

PLAN

DETAIL E S-28
SCALE 1 1/2"=1'-0"

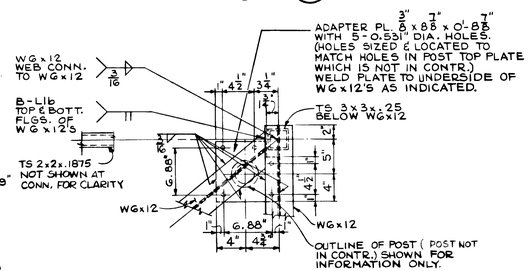

PLAN - DETAIL F S-16 S-28
1 1/2" = 1'-0"

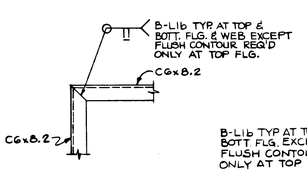

TYPICAL DETAIL
1 1/2" = 1'-0"

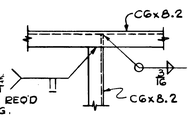

TYPICAL DETAIL
1 1/2" = 1'-0"

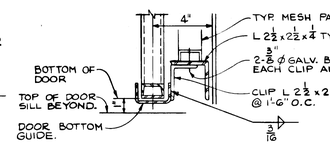

SECTION K S-28
3" = 1'-0"

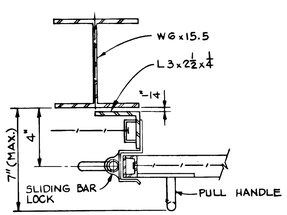

PLAN — SECTION H S-28
3" = 1'-0"

NOTE: ALL ELEVATIONS INDICATED REFER TO TOP OF COL. CONC. PEDESTAL AS REFERENCE EL. 0'-0".

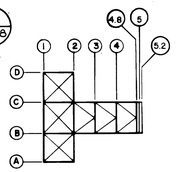

KEY PLAN
NO SCALE

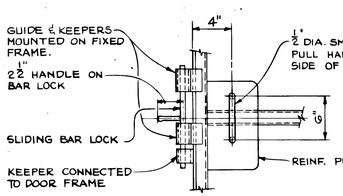

ELEVATION — DETAIL M S-28
1 1/2" = 1'-0"

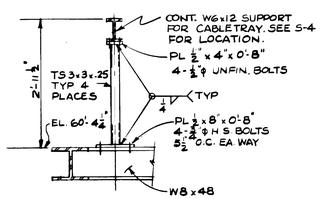

SECTION J S-4 S-28
3/4" = 1'-0"

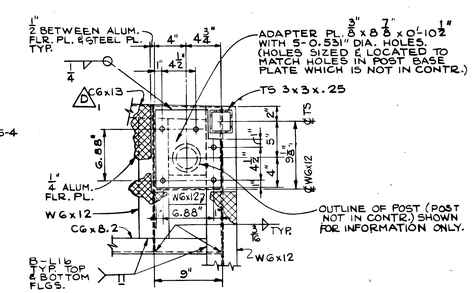

PLAN - DETAIL G S-16 S-28
1 1/2" = 1'-0"

TOP AND BOTTOM SUPPORT PLATE DETAILS FOR RETRACTABLE SUPPORT MECHANISM (SUPPORT MECHANISM NOT IN CONTRACT)
DETAILS FOR LEFT SIDE ACCESS/SERVICE PLATFORM SHOWN
DETAILS FOR RIGHT SIDE SAME EXCEPT OPPOSITE HAND

GRAPHIC SCALE

1/2" = 1'-0"
3/4" = 1'-0"
3" = 1'-0"

SYM.	ZONE	REVISIONS	DATE	APPROVED
1	B5	MISCL REVISIONS	5-19-76	WHB 7/6/76

CONNELL ASSOCIATES, INC.
ARCHITECTS / ENGINEERS / PLANNERS
CORAL GABLES, FLORIDA

SIGNATURES	DATE
DESIGNED	7-18-75
DRAWN	7-18-75
CHECKED	7-18-75
SUBMITTED	7-18-75
APPROVED	
APPROVED	
APPROVED	7/23/75
APPROVED	7/23/75
APPROVED	7/23/75
APPROVED	7/24/75

NATIONAL AERONAUTICS AND SPACE ADMINISTRATION
JOHN F. KENNEDY SPACE CENTER, NASA
KENNEDY SPACE CENTER, FLORIDA

NASA FLIGHT RESEARCH CENTER
EDWARDS AIR FORCE BASE, CALIFORNIA

ORBITER MATING DEVICE

PERSONNEL HOIST RAMP AND MISCELLANEOUS DETAILS

FILE NO.	SIZE	DWG. NO.	REV.
	F	79K05459	
PROJ. NO. PCN 77211		SHEET 34 OF 63	

S-28

Orbiter Mating Device
Personnel Hoist Ramp and Miscellaneous Details

79K05459
SHT. 34 of 63

REC FORM (F) 5-11A (REV. 1-68)

ABBREVIATIONS

AB	ANCHOR BOLT
ABT	ABOUT
AL	ALUMINUM
ASTM	AMERICAN SOCIETY FOR TESTING MATERIALS
B TO B	BACK TO BACK
BC	BOTTOM CHORD
BF	BOTH FACES
BM	BEAM
BOT	BOTTOM
BP	BASE PLATE
BRG	BEARING
BS	BOTH SIDES
C TO C	CENTER TO CENTER
CAM	CAMBER
CG	CENTER OF GRAVITY
CJ	CONSTRUCTION JOINT
CL	CENTERLINE OR CLEARANCE
CLR	CLEAR
COL	COLUMN
CONC	CONCRETE
CONN	CONNECTION
CONSTR	CONSTRUCTION
CONT	CONTINUOUS
COR	CORNER
CRN	CRANE
CSK	COUNTERSINK
CTSK	COUNTERSUNK
CTR	CENTER
DBL	DOUBLE
DTL	DETAIL
DIA	DIAMETER
DIAG	DIAGONAL
DIM	DIMENSION
DIR	DIRECTION
DIST	DISTANCE
DWG	DRAWING
DWL	DOWEL
EA	EACH
EF	EACH FACE
EL	ELEVATION
EQPT	EQUIPMENT
EXT	EXTERIOR
EW	EACH WAY
ETC	ETCETERA
FAB	FABRICATE
FDN	FOUNDATION
FIN	FINISH
FL	FLOOR
FLG	FLANGE
FLR	FILLER
FR	FRAME
FT	FOOT (FEET)
FTG	FOOTING
FUT	FUTURE
GA	GAGE
GALV	GALVANIZED
GALVI	GALVANIZED IRON
GR	GRADE
HDW	HARDWARE
HGT	HEIGHT
HM	HOLLOW METAL
HORIZ	HORIZONTAL
HR	HOUR
ID	INSIDE DIAMETER
IN	INCH
IND	INDICATE
INTR	INTERIOR
JT	JOINT
KIPS	THOUSAND POUNDS
LONG	LONGITUDINAL
MATL	MATERIAL
MAX	MAXIMUM
MBR	MEMBER
MECH	MECHANICAL
MET	METAL
MFR	MANUFACTURER
MIN	MINIMUM
MISC	MISCELLANEOUS
NIC	NOT IN CONTRACT
NO	NUMBER
NS	NEAR SIDE
OC	ON CENTER
OD	OUTSIDE DIAMETER
OPNG	OPENING
OPP	OPPOSITE
OSL	OUTSTANDING LEG
PC	PIECE
PERP	PERPENDICULAR
PI	POINT OF INTERSECTION
PL	PLATE
PNL	PANEL
PP	PANEL POINT
PRL	PARALLEL
PSF	POUNDS PER SQUARE FOOT
PSI	POUND PER SQUARE INCH
QTY	QUANTITY
RAD	RADIUS
RC	REINFORCED CONCRETE
REF	REFER, REFERENCE
REINF	REINFORCE
REQ	REQUIRE
REQD	REQUIRED
SCHEM	SCHEMATIC
SECT	SECTION
SHT	SHEET
SIM	SIMILAR
SM	SHEET METAL
SOL	SOLID
SPEC	SPECIFICATION
SQ	SQUARE
SS	SAME SIZE
STL	STEEL
STRL	STRUCTURAL
SYM	SYMBOL
STIFF	STIFFENER
TC	TOP CHORD
THK	THICK
THKNS	THICKNESS
THRU	THROUGH
TOC	TOP OF CONCRETE
TOS	TOP OF STEEL
TOT	TOTAL
TRANSV	TRANSVERSE
TYP	TYPICAL
UON	UNLESS OTHERWISE NOTED
VERT	VERTICAL
VRFY	VERIFY
W/	WITH
WL	WORK LINE
WP	WORK POINT

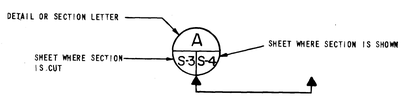

DETAIL OR SECTION SYMBOL

GENERAL NOTES

1. ALL ELEVATIONS INDICATED REFER TO TOP OF COLUMN CONCRETE PEDESTAL AS REFERENCE EL. 0'-0". ACTUAL EL. = 2276.83.
2. THE CONTRACTOR SHALL CHECK AND COMPARE THE DIMENSIONS ON THE DIFFERENT DRAWINGS THAT DIMENSION SAME ITEMS AND REPORT ANY DISCREPANCIES TO CONTRACTING OFFICER FOR COORDINATION.
3. STRUCTURAL STEEL SHALL BE FABRICATED AND ERECTED IN ACCORDANCE WITH THE LASTEST AISC AND A.W.S. D1.1-72 SPECIFICATIONS.
4. ALL BOLTS OF 1/2" DIAMETER OR LARGER. USED FOR CONNECTIONS BETWEEN STEEL MEMBERS SHALL BE NEW HIGH STRENGTH BOLTS CONFORMING TO ASTM SPEC. A325 UNLESS SPECIFICALLY NOTED OTHERWISE ON THE DRAWINGS.
5. DIELECTRIC INSULATION SHEET OR TAPE MATERIAL SHALL BE APPLIED BETWEEN ALL CONTACT SURFACES OF ALUMINUM AND CARBON STEEL. SEE SPECIFICATIONS FOR THE DIELECTRIC INSULATION MATERIAL REQUIREMENTS. ALL BOLTS, NUTS AND WASHERS USED TO CONNECT ALUMINUM TO CARBON STEEL SHALL BE STAINLESS STEEL. AFTER ASSEMBLY ALL FAYING SURFACES & EDGES BETWEEN ALUMINUM AND CARBON STEEL SHALL BE SEALED WITH SEALANT PER SPECIFICATIONS.
6. SHOP OR FIELD SPLICES OF STRUCTURAL MEMBERS ARE PROHIBITED EXCEPT AS DETAILED ON THESE DRAWINGS AND/OR PERMITTED IN THE SPECIFICATIONS. ALL PROPOSED SPLICES SHALL BE SPECIFICALLY DETAILED AND SUBMITTED FOR APPROVAL ON SHOP DRAWINGS PRIOR TO FABRICATION.
7. ONE HALF INCH DIAMETER MINIMUM WEEP HOLES SHALL BE PROVIDED IN ALL UPTURNED STRUCTURAL MEMBERS THAT WOULD BE INCLINED TO ENTRAP WATER. WEEP HOLES SHALL BE SPACED TO PREVENT ENTRAPMENT OF ANY WATER OR AT A MAXIMUM OF 2'-0" O.C.
8. BOLT HOLES IN MEMBERS AND PLATES SHALL NOT BE CUT OR ENLARGED BY FLAME CUTTING IN FIELD
9. ALL RE-ENTRANT CORNERS IN GUSSET PLATES SHALL BE SHAPED NOTCH-FREE TO A RADIUS OF AT LEAST 1 INCH.
10. 1/4" CLOSURE PLATES SHALL BE PROVIDED AT OPEN ENDS OF ALL TUBULAR MEMBERS. CLOSURE PLATES SHALL PROJECT 1/4" MINIMUM BEYOND CIRCUMFERENCE, AND SHALL BE SEALED TO TUBULAR MEMBERS AND FISH PLATES WITH CONTINUOUS 3/16" FILLET WELD.
11. WHERE JOINTS ARE NOT DETAILED OR REFERENCED TO, THEY SHALL BE SIMILAR TO TYPICAL DETAILS OR SPECIFIC DETAILS FOR SIMILAR MEMBERS. IF THE CONNECTION IS NOT SIMILAR TO ANY TYPICAL OR DETAILED CONNECTION, THE CONNECTION SHALL BE AS FOLLOWS.
    a. BOLTED CONNECTIONS NOT DETAILED SHALL BE DESIGNED TO TRANSFER DESIGNATED DESIGN LOADS OR 100% OF THE CONNECTED MEMBER'S CROSS SECTION CAPACITY IN TENSION WHICHEVER IS GREATER, UTILIZING HIGH STRENGTH BOLTS IN FRICTION TYPE CONNECTIONS. △1
    b. WELDED CONNECTIONS NOT DETAILED SHALL CONFORM TO ALL OF THE REQUIREMENTS OF THE AWS SPEC. D1.1-72.
12. THE FOLLOWING JOINTS SHALL BE SEALED AS SPECIFIED IN SECTION. CALKING AND SEALING.
    a. PERIMETER OF FAYING AND BEARING SURFACES OF STRUCTURAL MEMBERS.
    b. PERIMETER OF STRUCTURAL BOLT HEADS AND NUTS.
    c. JOINTS IN MEMBERS BETWEEN INTERMITTENT WELDS.
    d. PERIMETER OF BEARING SURFACES BETWEEN FLOOR PLATES AND SUPPORTING MEMBERS.
13. ALL METAL SHALL BE BONDED AND GROUNDED IN ACCORDANCE WITH THE SPECIFICATION SECTION BONDING AND GROUNDING OF METALS.
14. ALL WELDS SHALL BE CLASS "A" AS CLASSIFIED IN SPECIFICATIONS SECTION 17K OF THESE SPECIFICATIONS EXCEPT CONNECTION OF FLOOR GRATING, FLOOR PLATE, AND CABLE ENCLOSURE MEMBERS, WHICH SHALL BE CLASS B.
15. SIZES, SPACING AND QUANTITY OF BOLTS FOR EQUIPMENT TO BE FURNISHED BY SUBCONTRACTORS SHALL BE DETERMINED BY THE CONTRACTOR AND COORDINATED WITH ALL SUBCONTRACTORS PRIOR TO PREPARATION OF SHOP DRAWINGS.
16. DO NOT PAINT FAYING SURFACES OF BOLTED CONNECTIONS. CONNECTIONS TO BE PAINTED ONLY AFTER ASSEMBLY.
17. MATING DEVICE HAS BEEN DESIGNED FOR WIND AS AN OPEN STRUCTURE NOT INTENDED TO ACCOMMODATE ROOMS, ENCLOSURES OF EXTENSIVE GSE.
18. PLATFORM MEMBERS AND SUPPORTING BEAMS ARE UTILIZED IN PROVIDING LATERAL STABILITY TO STRUCTURE. REMOVAL OF PART OF ANY PLATFORM WILL REQUIRE STUDY TO DETERMINE EQUIVALENT SUPPORT.

DESIGN DATA

A. STRUCTURAL DESIGN IS IN ACCORDANCE WITH THE FOLLOWING CODES AND SPECIFICATIONS:
   1. KSC-STD-Z-0004, THE DESIGN OF STEEL BUILDINGS AND FRAMEWORK, STANDARD FOR
   2. TECHNICAL MANUAL D A 809-10. SEISMIC DESIGN FOR BUILDINGS
   3. KSC-STD-Z-0002, STANDARD FOR THE DESIGN REQUIREMENTS FOR LIFTING AND HOISTING EQUIPMENT
   4. AISC MANUAL OF STEEL CONSTRUCTION
   5. AWS STRUCTURAL WELDING CODE D1.1-72

B. MATERIALS
   1. STRUCTURAL STEEL SHAPES AND PLATES — ASTM A36 - F_y = 36 KSI
   2. STRUCTURAL STEEL TUBING — ASTM A500, GRADE B - - - - - - - - - - - - - - - - F_y = 46 KSI
   3. HIGH STRENGTH BOLTS — ASTM A325 (FRICTION TYPE CONNECTION)
   4. UNFINISHED BOLTS — ASTM A307
   5. STRUCTURAL ALUMINUM SHAPES & PLATES (INCL. FLOOR PLATE) - - - - - - - - - - - - - - - - - ALLOY 6061-T6

C. DESIGN CRITERIA
   1. LIVE LOADS (GSE IS INCLUDED IN THE LIVE LOADS):
      a. ACCESS/SERVICE PLATFORMS (LOAD ON EACH) - - - - 5000 LBS. CONCENTRATED ON ANY ONE 3'-0" x 6'-0" AREA OF MAIN PLATFORM PLUS 5000 LBS. TOTAL ALLOWANCE FOR GSE ON PLATFORM. MAXIMUM LIVE LOAD ON EACH CANTILEVERED HINGED PLATFORM-50 P.S.F. OR 400 LBS. CONCENTRATED AT OUT EDGE. (WHICHEVER GOVERNS).
      b. CATWALKS - 60 P.S.F.
      c. ALL OTHER PLATFORM AREAS - 100 P.S.F.
      d. STAIRS - - - - - - - - - - - 100 P.S.F. or 300 LBS CONCENTRATED AT CENTER OF TREAD OR 1,000 LBS. OVER AN AREA 2.5 FT. SQUARE WHICHEVER GOVERNS.
      e. FORWARD MATING ACCESS ROLLING PLATFORM--- 1,000 LB. CONCENTRATED LOAD AT END OF CANTILEVERED PLATFORM PLUS UNIFORM LIVE LOAD OF 60 P.S.F. △2 E2
   2. HOIST LOADS
      a. TOTAL ORBITER WEIGHT = 225 KIPS (ASSUMED DISTRIBUTED 30% (67.5 KIPS) TO FORWARD HOOK AND 70% (157.5 KIPS) TO THE TWO AFT HOOKS (78.75 KIPS EACH).
      b. RATED LOAD = 100 KIPS PER HOOK
         IMPACT OF RATED LOAD = 0.25 X 100 = 25 KIPS PER HOOK
         RATED LOAD + IMPACT = 100 + 25 = 125 KIPS PER HOOK
   3. WIND
      a. DESIGN VELOCITY AT 30 FT. ABOVE GROUND LEVEL - - - - - - - - - - - - - - - - - - 125 MPH
      b. MAX. WIND DESIGN FOR OPERATIONS - 12 KNOTS (13.8 MPH)
         LATERAL CONTROLS CAPABLE OF HOLDING ORBITER STEADY.
      c. MAX. WIND ON ORBITER WHILE SUSPENDED AT UPPER LOCATION - - - - - - - - - - - - - 40 KNOTS (46 MPH)
         SAFETY TIES PROVIDED TO WITHSTAND LOADS.
   * 4. SEISMIC - ZONE 4, Z=1
   5. ALLOWABLE STRESSES
      ALLOWABLE STRESSES IN ACCORDANCE WITH AISC "SPECIFICATIONS FOR THE DESIGN, FABRICATION AND ERECTION OF STRUCTURAL STEEL FOR BUILDINGS ADOPTED FEB. 12, 1969, AND WITH 1/3 INCREASE IN ALLOWABLE FOR WIND & EARTHQUAKE, WHERE APPLICABLE.

* NOTE: FOR STATIC ANALYSIS USE 0.25 x GRAVITY FORCE

△1 E1 6. AUXILIARY ACCESS PLATFORM "A"
LIVE LOADS (GSE IS INCLUDED IN THE LOADS) - - - - - - - - 1000 LBS. CONCENTRATED ON ANY ONE 3'-0" X 3'-0" AREA OF PLATFORM OR 60 P.S.F. UNIFORM LOAD

SPECIAL PAINTING REQUIREMENT

THE UPPER PORTION OF THE ORBITER MATING DEVICE, FROM ELEVATION 41'-0" UP, SHALL BE GIVEN A TOP COAT OF "INTERNATIONAL ORANGE" PAINT IN ADDITION TO THE PROTECTIVE COATING AS DESCRIBED IN SPECIFICATION SECTION 9L.

△2 E2 NOTE:
SPECIFICATIONS FOR ORBITER MATING DEVICE, FRC (PCN 77211, DWG. Nº 79K05459)
ALSO APPLY FOR THE AUXILIARY ACCESS PLATFORM "A" (PCN 77211, DWG. 79K07679)

SYM.	ZONE	REVISIONS	DATE	APPROVED
△2	C1-C3 D1-D3	AUXILIARY ACCESS PLATFORM "A" INFO. ADDED	7-2-76	W.H.B. 7/6/76
△2	F1-F3 F-9	ROLLING ACCESS PLATFORM DESIGN LOAD ADDED	5-13-76	W.H.B. 7/6/76

CONNELL ASSOCIATES, INC.
ARCHITECTS / ENGINEERS / PLANNERS
CORAL GABLES, FLORIDA

SIGNATURES	DATE
DESIGNED	7-18-75
DRAWN	7-18-75
CHECKED	7-18-75
SUBMITTED	7-18-75
APPROVED	
APPROVED	
APPROVED	7/22/75
APPROVED	7/24/75
APPROVED	7-24-75
APPROVED	7-24-75

NATIONAL AERONAUTICS AND SPACE ADMINISTRATION
JOHN F. KENNEDY SPACE CENTER, NASA
KENNEDY SPACE CENTER, FLORIDA

NASA FLIGHT RESEARCH CENTER
EDWARDS AIR FORCE BASE, CALIFORNIA

ORBITER MATING DEVICE
GENERAL NOTES, DESIGN DATA

S-1

FILE NO.	SIZE	DWG. NO.	REV.
	F	79K05459	
PROJ. NO. PCN 77211		SHEET 6 OF 63	

Orbiter Mating Device General Notes, Design Data

79K05459 SHT 6 of 63

KSC FORM (F) 1-11A (REV. 1-68)

SCHEDULE OF REACTIONS AT COLUMN BASE FOR 115'-0" STRUCTURE (KIPS)

COMPUTER ANALYSIS JOINT NO.	COLUMN BASE AT GRID LINES:	CASE 1 DEAD LOAD OF STRUCTURE			CASE 2 D.L. ORBITER + SLING			CASE 3 RATED HOIST LOAD + IMPACT			CASE 4 125 M.P.H. LONGIT. WIND			CASE 5 125 M.P.H. TRANSVERSE WIND			CASE 7 LONGITUDINAL EARTHQUAKE			CASE 8 TRANSVERSE EARTHQUAKE			CASE 9 125 M.P.H. WIND AT 45°			CASE 10 EARTHQUAKE AT 45°		
		Fx	Fy	Fz	Fx	Fy	Fz	Fx	Fy	Fz	Fx	Fy	Fz	Fx	Fy	Fz	Fx	Fy	Fz	Fx	Fy	Fz	Fx	Fy	Fz	Fx	Fy	Fz
133	2-D	-12.9	4.1	-92.0	-13.7	1.7	-92.5	-21.9	2.7	-146.3	-13.7	42.0	-169.1	-58.2	1.2	-160.5	-8.1	20.6	-86.8	-32.7	-16.0	-36.9	-56.8	34.2	-260.4	-28.8	3.3	-87.5
134	2-C	10.5	3.5	-187.4	12.2	-0.4	-201.6	18.1	-0.5	-319.4	14.3	43.1	-233.9	-54.0	-10.6	197.1	6.3	23.6	-118.8	-39.7	-6.4	179.7	-31.3	25.7	-29.1	-23.6	12.2	43.1
135	2-B	-11.1	3.7	-194.3	-12.4	-0.4	-202.1	-19.4	-0.4	-320.4	-14.3	43.1	-233.9	-54.0	10.6	-197.1	-6.8	24.7	-121.4	-41.0	6.3	-180.6	-54.0	42.4	-340.4	-33.8	22.0	-213.6
136	2-A	13.4	4.8	-100.8	14.0	2.0	-93.9	22.4	3.2	-148.8	13.7	42.0	-169.1	-58.2	-1.2	160.5	7.7	22.6	-89.3	-33.9	16.0	37.9	-35.2	32.2	-6.8	-18.5	27.3	-36.4
137	1-D	1.5	-2.6	19.4	9.5	1.1	88.0	14.7	1.6	137.0	19.8	43.8	196.4	-49.1	-30.8	-231.7	11.0	21.8	99.8	-19.0	-32.3	-158.9	-23.2	10.3	-27.9	-5.6	-7.4	-41.8
138	1-C	-4.2	-5.0	14.3	-11.5	-2.1	88.6	-18.0	-3.5	137.5	-15.5	49.3	206.6	-33.5	0.4	63.0	-6.9	27.0	105.9	-3.1	0.2	-9.1	-38.7	39.3	213.0	-7.1	19.2	68.4
139	1-B	3.8	-5.4	9.9	11.2	-2.2	88.5	17.5	-3.7	137.3	15.5	49.3	206.6	-33.5	-0.4	-63.0	7.4	28.1	108.3	-4.2	-0.1	8.1	-14.2	38.6	113.4	2.2	19.8	82.3
140	1-A	-1.0	-3.2	10.9	-8.3	0.6	86.6	-18.4	0.6	134.4	-19.8	43.8	196.4	-49.1	30.8	231.7	-10.7	23.8	102.4	-20.0	32.2	159.9	-54.4	59.0	338.2	-21.7	39.6	185.4

NOTE: SEE SHEET S-2A FOR SCHEDULE OF REACTIONS.

SCHEDULE NOTES:

1) REACTIONS GIVEN ARE AT TOP OF BASE PLATE.
2) REACTIONS GIVEN ACTING ON FOOTING ACCORDING TO SIGN CONVENTION IN GROUND LEVEL PLAN BELOW.
3) REACTIONS FOR WIND AND EARTHQUAKE LOAD CASES CAN BE CONSIDERED POSITIVE OR NEGATIVE (±)
4) EARTHQUAKE LOAD CASES 7, 8 & 10 ASSUME THE ORBITER IS SUPPORTED BY THE MATING DEVICE STRUCTURE. THEREFORE TO OBTAIN THE TOTAL REACTIONS CASES 7, 8 OR 10 MUST BE ADDED TO CASES 1 AND 2.
5) CASES 4, 5 & 9 CONSIDER ONLY WIND LOADS ON THE STRUCTURE. TO OBTAIN TOTAL REACTIONS THEY MUST BE ADDED TO CASE 1 (DEAD LOAD OF STRUCTURE).

ANCHOR BOLT NOTES:

1) ALL ANCHOR BOLTS SHALL BE 1 3/4" ϕ STEEL BOLTS OF F_y = 60.0 KSI MATERIAL.
2) ALL ANCHOR BOLTS, EXCEPT AT COLS. E-B AND 2-C, SHALL BE COATED OR WRAPPED IN SUCH A MANNER SO AS NOT TO DEVELOP ANY BOND WITH THE FOOTING CONCRETE AND PRETENSIONED TO A STRESS OF 18.0 KSI. (34.0 K/BOLT)
3) PRETENSIONING OF BOLTS SHALL BE PERFORMED WITH A CALIBRATED TORQUE WRENCH. MEASUREMENT OF STRESS IN BOLTS SHALL BE PERFORMED AT REGULAR INTERVALS BY MEANS OF STRAIN GAGES TO DETERMINE ANY LOSS IN PRETENSIONING.

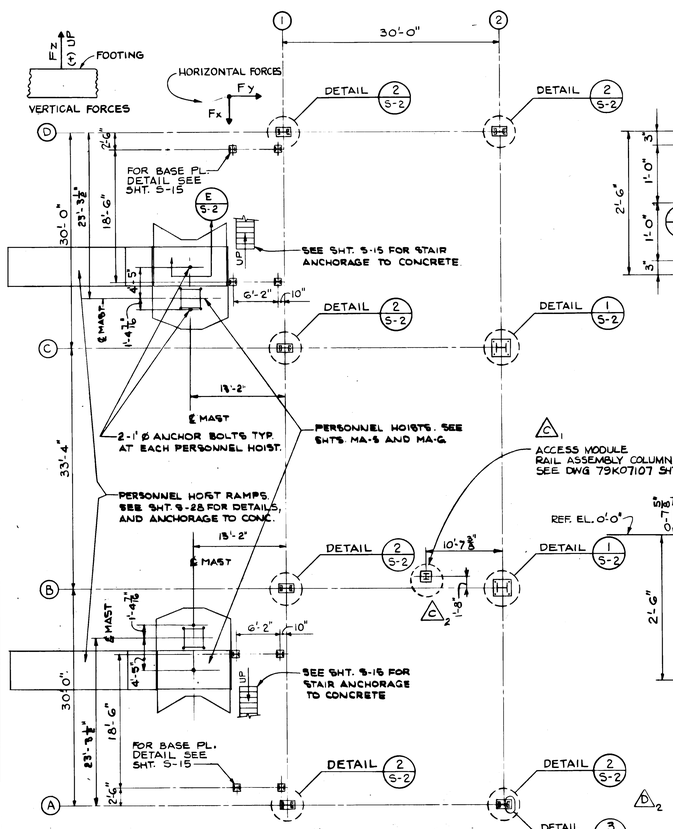

GROUND LEVEL PLAN
1/8" = 1'-0"

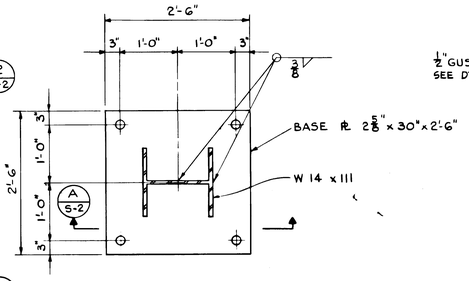

DETAIL 1 S-2
1" = 1'-0"

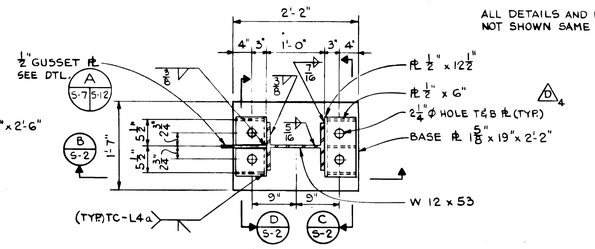

DETAIL 2 S-2
1" = 1'-0"

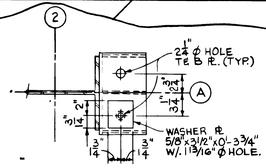

DETAIL 3 S-2
1 1/2" = 1'-0"

ALL DETAILS AND DIMENSIONS NOT SHOWN SAME AS DETAIL 2 S-2

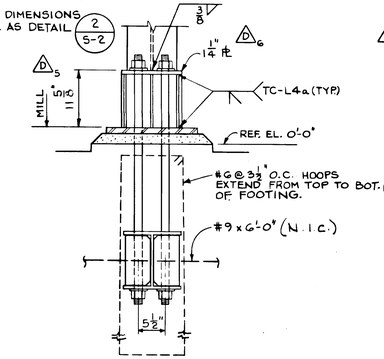

SECTION C S-2
1" = 1'-0"

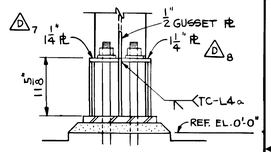

SECTION D S-2
1" = 1'-0"

NOTE: ALL REINFORCEMENT BARS SHOWN (N.I.C.) SHALL BE ASTM A615-GR 60 F_y = 60.0 KSI

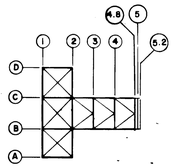

KEY PLAN
NO SCALE

SECTION A S-2
1" = 1'-0"

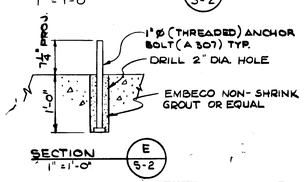

SECTION E S-2
1" = 1'-0"

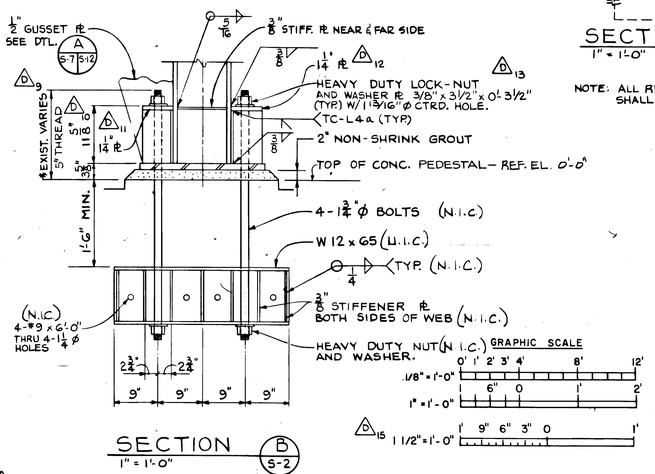

SECTION B S-2
1" = 1'-0"

GRAPHIC SCALE
1/8" = 1'-0" 0' 1' 2' 3' 4' 8' 12'
1" = 1'-0" 6" 0 1' 2'
1 1/2" = 1'-0" 1' 9" 6" 3" 0 1'

DTLS. DEVELOPED USING MIN. BOLT EXTENSION (1'-5 5/8") DETERMINED FROM "AS BUILT" SURVEY OF BOLTS AND PEDESTALS IN VTN SHT. S-23.

SYM.	ZONE	REVISIONS	DATE	APPROVED
D15	A3-A4, A6-C5, C7-A, E5-E6, E8-G8, H5-H8	BASE PLATE REV5, SCHEDULE OF REACTIONS DELETED	5-19-76	F.I.Z.
2	C5	ORBITER ACCESS MODULE ADDED.	5-6-76	

CONNELL ASSOCIATES, INC.
ARCHITECTS / ENGINEERS / PLANNERS
CORAL GABLES, FLORIDA

NATIONAL AERONAUTICS AND SPACE ADMINISTRATION
JOHN F. KENNEDY SPACE CENTER, NASA
KENNEDY SPACE CENTER, FLORIDA

NASA FLIGHT RESEARCH CENTER
EDWARDS AIR FORCE BASE, CALIFORNIA

ORBITER MATING DEVICE
GROUND LEVEL PLAN, COLUMN BASE PLATE AND ANCHORAGE DETAILS, SCHEDULE OF REACTIONS AT BASE OF COLUMNS

SIGNATURES	DATE
DESIGNED	7-18-75
DRAWN	7-18-75
CHECKED	7-18-75
SUBMITTED	7-18-75
APPROVED	7-23-75
APPROVED	
APPROVED	7/23/75
APPROVED	7/23/75
APPROVED	7/23/75
APPROVED	7-24-75

S-2 | FILE NO. | SIZE F | DWG. NO. 79K05459 | REV.
PROJ. NO. PCN 77211 | SHEET 7 OF 63

79K05459
SHT 7 of 63

Orbiter Mating Device
Ground Level Plan, Column Base Plate + Anchorage Details

Orbiter Mating Device
Schedule of Reactions @ Base
of Columns 100' High Structure

79K05459
SHT. 8 of 63

△D1

SCHEDULE OF REACTIONS AT COLUMN BASE FOR 100'-0" STRUCTURE (KIPS)

COMPUTER ANALYSIS JOINT NO.	COLUMN BASE AT GRID LINES:	CASE ① DEAD LOAD OF STRUCTURE			CASE ② D.L. ORBITER + SLING			CASE ③ RATED HOIST LOAD + IMPACT			CASE ④ 75 M.P.H. LONGITUDINAL WIND			CASE ⑤ 75 M.P.H. TRANSVERSE WIND						CASE ⑦ LONGITUDINAL EARTHQUAKE			CASE ⑧ TRANSVERSE EARTHQUAKE			CASE ⑨ 75 M.P.H. WIND AT 45°			CASE ⑩ EARTHQUAKE AT 45°		
		Fx	Fy	Fz	Fx	Fy	Fz	Fx	Fy	Fz	Fx	Fy	Fz	Fx	Fy	Fz				Fx	Fy	Fz	Fx	Fy	Fz	Fx	Fy	Fz	Fx	Fy	Fz
133	②-Ⓓ	-16.0	6.5	-123.8	-12.2	2.9	-89.6	-19.6	4.5	-141.7	-3.4	12.5	-44.6	-17.9	-0.7	-46.0				-9.8	22.7	-96.1	-34.7	-19.1	-39.4	-16.8	9.3	-71.6	-31.5	2.6	-95.6
134	②-Ⓒ	16.4	2.8	-257.6	13.9	-1.6	-204.7	21.6	-2.2	-324.4	3.5	12.9	-59.5	-17.6	-4.5	71.1				5.8	26.9	-128.9	-43.5	-10.7	212.4	-11.2	6.6	9.2	-26.5	11.4	59.0
135	②-Ⓑ	-16.6	2.7	-258.3	-14.1	-1.6	-204.4	-21.9	-2.2	-323.9	-3.5	12.9	-59.5	-17.6	4.5	-71.1				-6.0	26.9	-129.2	-43.4	10.7	-212.4	-16.7	13.7	-103.2	-34.9	26.6	-241.5
136	②-Ⓐ	16.1	6.9	-130.3	12.5	3.1	-91.3	20.2	4.9	-144.7	3.4	12.5	-44.6	-17.9	0.7	46.0				9.7	23.1	-96.5	-34.9	19.1	39.5	-11.4	10.4	1.0	-17.8	29.8	-40.3
137	①-Ⓓ	3.3	-1.3	37.7	9.5	2.7	88.0	14.6	3.9	137.0	4.9	12.8	50.6	-15.5	-10.2	-71.6				12.3	23.4	107.6	-21.7	-37.3	-177.8	-8.4	2.1	-16.6	-6.7	-9.6	-49.7
138	①-Ⓒ	-7.5	-8.0	33.7	-11.7	-3.7	88.4	-18.4	-5.9	137.2	-3.7	14.3	53.5	-11.1	-0.40	21.0				-7.2	30.8	117.5	-4.5	-2.2	-9.2	-11.7	11.0	58.9	-8.2	20.2	76.6
139	①-Ⓑ	7.4	-7.9	33.0	11.5	-3.8	88.8	17.8	-6.0	137.9	3.7	14.3	53.5	-11.1	0.40	-21.0				7.3	30.8	117.8	-4.6	2.2	9.1	-5.8	11.6	25.7	1.9	23.3	89.7
140	①-Ⓐ	-3.2	-1.7	31.3	-9.3	2.2	86.4	-14.3	3.1	134.0	-4.9	12.8	50.6	-15.5	10.2	71.6				-12.1	24.2	107.9	-21.8	37.3	177.9	-16.1	18.1	96.6	-24.0	43.5	202.1

SCHEDULE NOTES:

1) REACTIONS GIVEN ARE AT TOP OF BASE PLATE.
2) REACTIONS GIVEN ACTING ON FOOTING ACCORDING TO SIGN CONVENTION IN GROUND LEVEL PLAN IN SHT. S-2.
3) REACTIONS FOR WIND AND EARTHQUAKE LOAD CASES CAN BE CONSIDERED POSITIVE OR NEGATIVE (±).
4) EARTHQUAKE LOAD CASES ⑦, ⑧ & ⑩ ASSUME THE ORBITER IS SUPPORTED BY THE MATING DEVICE STRUCTURE. THEREFORE TO OBTAIN THE TOTAL REACTIONS CASES ⑦, ⑧ OR ⑩ MUST BE ADDED TO CASES ① AND ②.
5) CASES ④, ⑤ & ⑨ CONSIDER ONLY WIND LOADS ON THE STRUCTURE. TO OBTAIN TOTAL REACTIONS THEY MUST BE ADDED TO CASE ① (DEAD LOAD OF STRUCTURE).

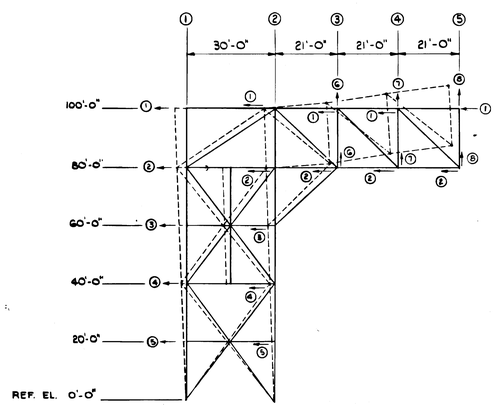

CAMBER DIAGRAM

NOTE:
CAMBER DIAGRAM GIVEN SO THAT TRUSS IS HORIZONTAL UNDER D.L. OF STRUCTURE PLUS D.L. OF ACCESS SERVICE PLATFORM (INCLUDING G.S.E.)

△D2

CAMBER TABLE	
NUMBER	CAMBER (INCHES)
①	7/8
②	1/2
③	3/16
④	3/32
⑤	1/32
⑥	3/4
⑦	1 3/8
⑧	2

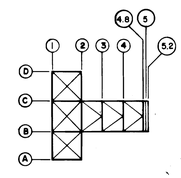

KEY PLAN
NO SCALE

SYM.	ZONE			DATE	APPROVED
△2	BS. CC H1-H8	G1-G8	SCHEDULE OF REACTIONS REV. & CAMBER TABLE REV.	5-19-76	F.L.Z. 7/6/76

REVISIONS

CONNELL ASSOCIATES, INC.
ARCHITECTS / ENGINEERS / PLANNERS
CORAL GABLES, FLORIDA

SIGNATURES	DATE
DESIGNED F. Barrera	7-18-75
DRAWN	7-18-75
CHECKED	7-18-75
SUBMITTED	7-18-75
APPROVED	
APPROVED	
APPROVED	7/24/75
APPROVED	7/23/75
APPROVED	7/23/75
APPROVED	7-24-75

NATIONAL AERONAUTICS AND SPACE ADMINISTRATION
JOHN F. KENNEDY SPACE CENTER, NASA
KENNEDY SPACE CENTER, FLORIDA

NASA FLIGHT RESEARCH CENTER
EDWARDS AIR FORCE BASE, CALIFORNIA

ORBITER MATING DEVICE

SCHEDULE OF REACTIONS AT BASE OF COLUMNS 100 FOOT HIGH STRUCTURE

S-2A

FILE NO.	SIZE	DWG. NO.	REV.
	F	79K05459	
PROJ. NO. PCN 77211		SHEET 8 OF 63	

KBC FORM (F) 5-15A (REV. 1-68)

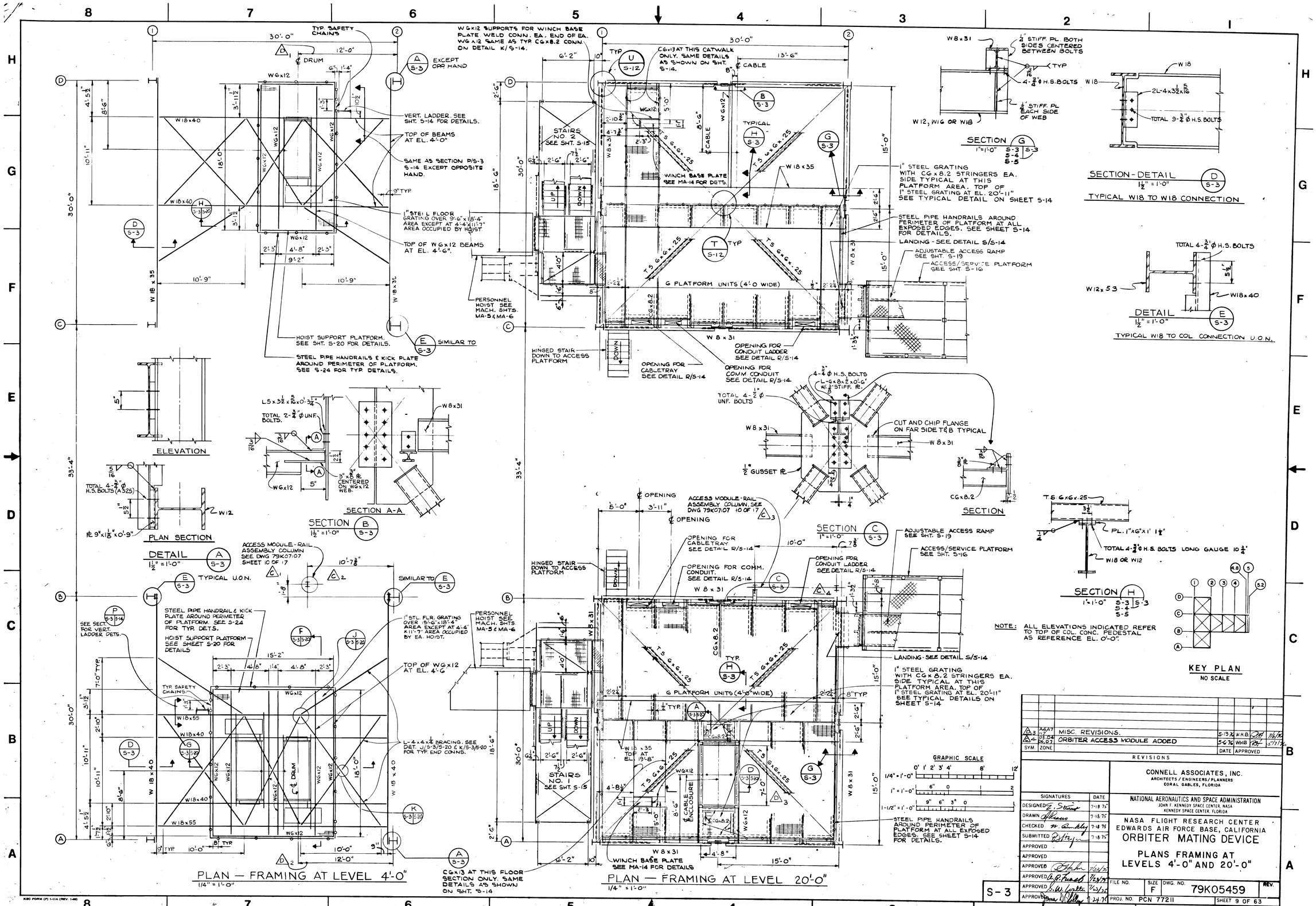

SYM.	ZONE		DATE	APPROVED
3	A4A7 17	MISC. REVISIONS.	5-19-76	WHB
4	B3D4 B6D7	ORBITER ACCESS MODULE ADDED	5-6-76	WHB

REVISIONS

CONNELL ASSOCIATES, INC.
ARCHITECTS / ENGINEERS / PLANNERS
CORAL GABLES, FLORIDA

SIGNATURES	DATE
DESIGNED	7-18-75
DRAWN	7-18-75
CHECKED	7-18-75
SUBMITTED	7-18-75
APPROVED	
APPROVED	
APPROVED	7/23/75
APPROVED	7/24/75
APPROVED	7/24/75
APPROVED	7-24-76

NATIONAL AERONAUTICS AND SPACE ADMINISTRATION
JOHN F. KENNEDY SPACE CENTER, NASA
KENNEDY SPACE CENTER, FLORIDA

NASA FLIGHT RESEARCH CENTER
EDWARDS AIR FORCE BASE, CALIFORNIA

ORBITER MATING DEVICE

PLANS FRAMING AT LEVELS 4'-0" AND 20'-0"

S-3

FILE NO. | SIZE F | DWG. NO. 79K05459 | REV.
PROJ. NO. PCN 77211 | SHEET 9 OF 63

Orbiter Mating Device
Plans Framing @ Levels
4'-0" and 20'-0"

79K05459
SHT. 9 of 63

KBC FORM (F) 1-11A (REV. 1-68)