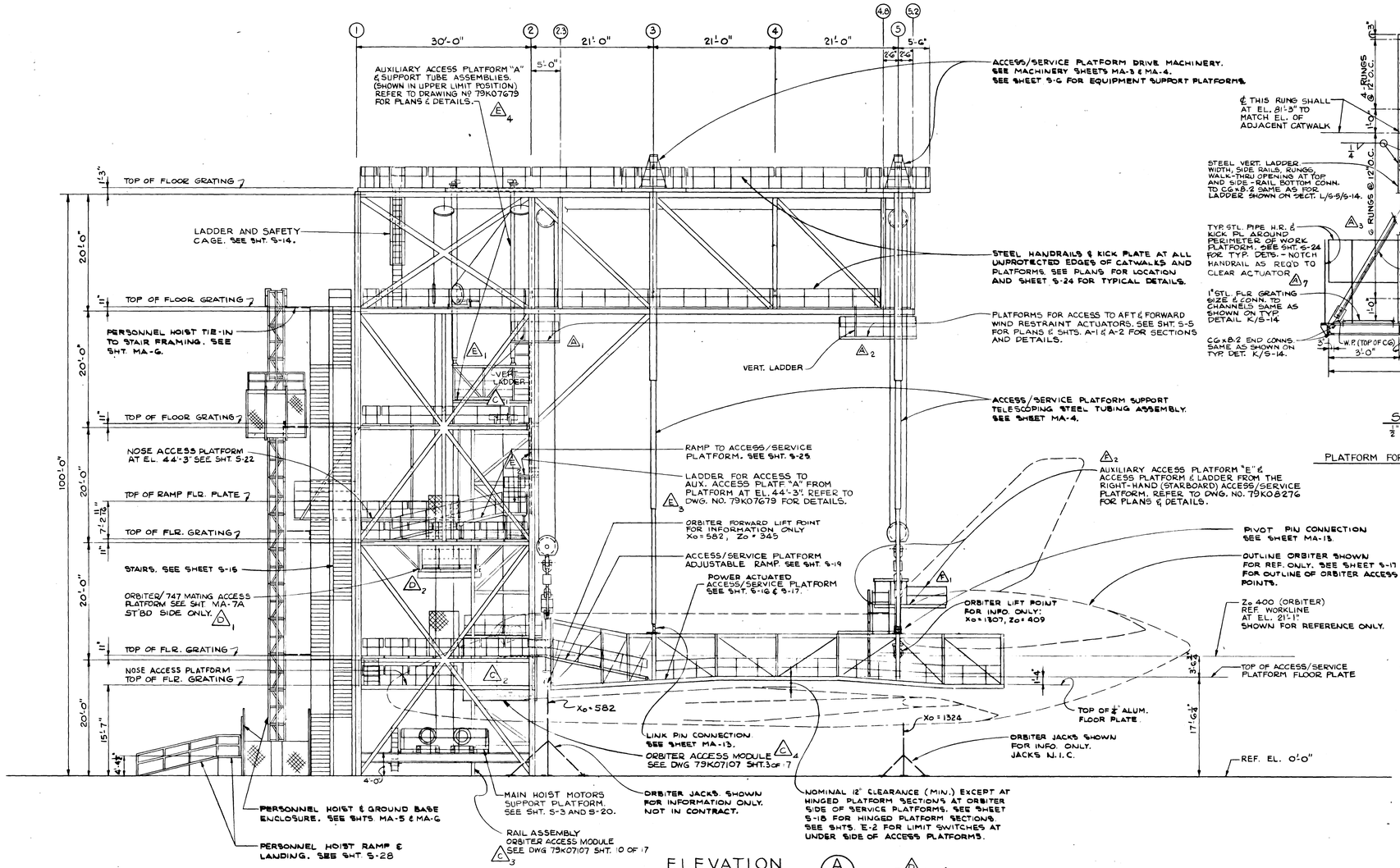


ELEVATION
1/8" = 1'-0"
A / A-1

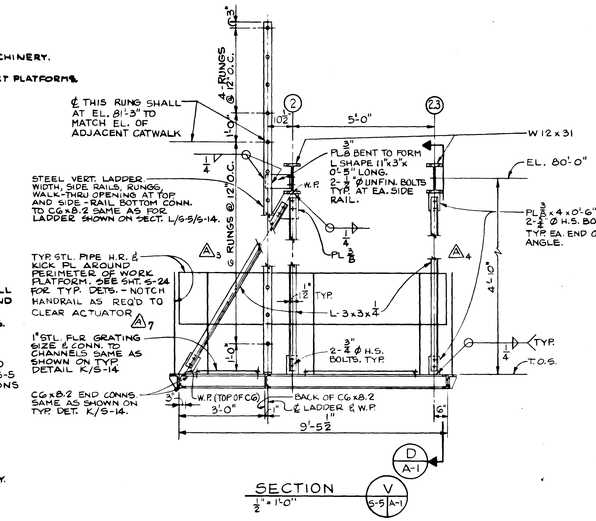


SECTION
1/2" = 1'-0"
D / A-1 — V / S-5 / A-1

PLATFORM FOR ACCESS TO FORWARD WIND RESTRAINT ACTUATOR

NOTE: ALL ELEVATIONS INDICATED REFER TO TOP OF COL. CONC. PEDESTAL AS REFERENCE EL. 0'-0".

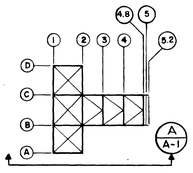

KEY PLAN
NO SCALE

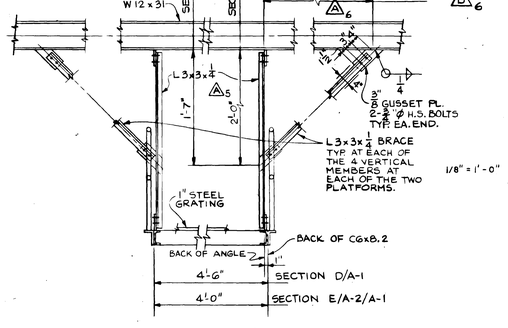


SECTION
1/2" = 1'-0"
D / A-1 & E / A-2 / A-1

GRAPHIC SCALE
1/8" = 1'-0"
4 2 0 4 8 12 16 20

[redacted]

A-1

Orbiter Mating Device
Arch. Elevation Orbiter
Positioned on Jacks

79K05159
SHT. 2 of 63

ASC FORM (F) 1-11A (REV. 1-68)