NOTICE: When Government drawings, specifications, or other data are used for any purpose other than in connection with a definitely related Government procurement operation, the United States Government thereby incurs no responsibility nor obligation whatsoever; and the fact that the Government may have formulated, furnished, or in any way supplied the said drawings, specifications or other data is not to be regarded by implication or otherwise as in any manner licensing the holder or any other person or corporation, or conveying any rights or permission to manufacture, use, or sell any patented invention that may in any way be related thereto.

AIR HANDLERS UPGRADES
BOOSTER FABRICATION FACILITY, BFF

SPECIFICATION REFERENCE 79K39342

NATIONAL AERONAUTICS AND SPACE ADMINISTRATION
KENNEDY SPACE CENTER, FLORIDA

JOHNSON, LEVINSON
RAGAN, DAVIDA, INC.
CONSULTING ENGINEERS
1450 Centrepark Boulevard, Suite 350
West Palm Beach, Florida 33401
(561) 689-2303 • (561) 689-2302 Fax
www.jlrdinc.com
Certification Number 6059

Michael D. Davila 36066 Charles C. Gableman 51936 Michael P. Linden 58094
Jason L. Compton 66459 Harold L. Ragan 48983

DOCUMENT INFORMATION: (TITLE, NUMBER, REV, DATE)

AIR HANDLERS UPGRADES - BOOSTER FABRICATION FACILITY, BFF, 79K39690, 6-13-13

SENSITIVE BUT UNCLASSIFIED (SBU)
INSTRUCTIONS: This item must be reviewed under the requirements for "Sensitive But Unclassified Information" as described in NPR 1600.1, Chapter 5.
http://nodis-dms.gsfc.nasa.gov

	Yes	No	SBU Reviewer's Signature	Date	Company / Org
Document contains SBU?	☐	☒	C.P. Bennardo	6/17/13	NASA/ TA-833

EXPORT CONTROL (EC)
INSTRUCTIONS: Attach the document requiring an export determination. Contact the KSC ECO Help Desk (867-9209) for help in completing this form.
http://exportcontrol.ksc.nasa.gov/index.cfm

Contractor EC Reviewer's Name and Organization	Contractor EC Reviewer's Signature	Date

NASA ECO Reviewer's Name and Organization	NASA ECO Reviewer's Signature	Date
C.P. BENNARDO TA-833	C.P. Bennardo	6/17/13

	EXPORT DETERMINATION (Check one box only)	
EAR 99	☒ NLR	The information contained in the document is technical in content, but is not technical data as defined by the ITAR or the EAR, and therefore is EAR 99 NLR (no export license required). [General Prohibition Six (Embargo) applies to all items subject to the EAR, i.e. items on the CCL and within EAR 99 NLR. You may not make an export or re-export contrary to the provisions of part 746 (Embargos and Other Special Controls) of the EAR and 22 CFR part 126.1 of the ITAR.]
EAR Controlled	☐	This document is within the purview of the Export Administration Regulations (EAR), 15 CFR 730-774, and is export controlled. It may not be transferred to foreign nationals in the U.S. or abroad without specific approval of a knowledgeable NASA export control official, and/or unless an export license or license exception is obtained/available from the Bureau of Industry and Security, United States Department of Commerce. Violations of these regulations are punishable by fine, imprisonment, or both.
ITAR Controlled	☐	This document contains information which falls under the purview of the U.S. Munitions List (USML), as defined in the International Traffic in Arms Regulations (ITAR), 22 CFR 120-130, and is export controlled. It shall not be transferred to foreign nationals, in the U.S. or abroad, without specific approval of a knowledgeable NASA export control official, and/or unless an export license or license exemption is obtained/available from the United States Department of State. *Violations of these regulations are punishable by fine, imprisonment, or both.*

KSC FORM 7-657V2 NS (REV. 09/11) PREVIOUS EDITIONS ARE OBSOLETE

THIS DRAWING CREATED ON AUTOCAD 2011 AND WILL BE REVISED ONLY ON AUTOCAD 2011 SYSTEM. FILE: 79K39690– V-01 .DWG

V-01

SYM	ZONE	DESCRIPTION	DATE	APPROVED
		REVISIONS		

JOHNSON, LEVINSON RAGAN, DAVILA, INC. CONSULTING ENGINEERS
1450 Centrepark Boulevard, Suite 350 West Palm Beach, Florida 33401 (561) 689-2303 • (561) 689-2302 Fax www.jlrdinc.com
Certification Number 6059

SIGNATURES		DATE
DRAWN	K. GOMEZ	6/13/13
CHECKED	T. FEAGANS	6/13/13
SUBMITTED: AE PRJ MNGR– C. GABLEMAN	C Gable	6.13.13
APPROVED: AE OFF MNGR– M. DAVILA		6/13/13
APPROVED: NASA PRJ MNGR– D. SUMNER		6/17/13
APPROVED: NASA BR MNGR– P. BENNARDO	P. Bennardo	6/17/13

NATIONAL AERONAUTICS AND SPACE ADMINISTRATION
JOHN F. KENNEDY SPACE CENTER, NASA
KENNEDY SPACE CENTER, FLORIDA

AIR HANDLERS UPGRADES
BOOSTER FABRICATION FACILITY, BFF

TITLE SHEET

FILE. NO.	SIZE	DWG. NO.	REV
	F	79K39690	
PROJ. NO. 98889.2a		SHEET 1 OF 39	

KSC FORM 1-11 (3/76)(C/G 3/94)

NOTICE: When Government drawings, specifications, or other data are used for any purpose other than in connection with a definitely related Government procurement operation, the United States Government thereby incurs no responsibility nor obligation whatsoever; and the fact that the Government may have formulated, furnished, or in any way supplied the said drawings, specifications or other data is not to be regarded by implication or otherwise as in any manner licensing the holder or any other person or corporation, or conveying any rights or permission to manufacture, use, or sell any patented invention that may in any way be related thereto.

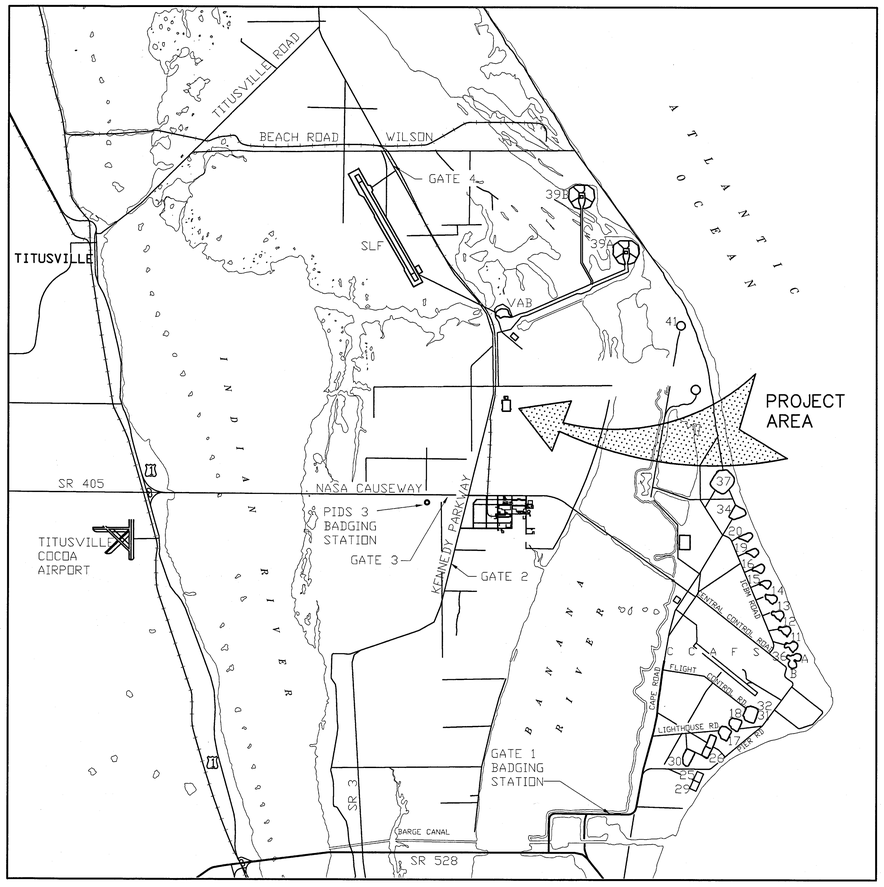

VICINITY MAP
SCALE: NONE

N

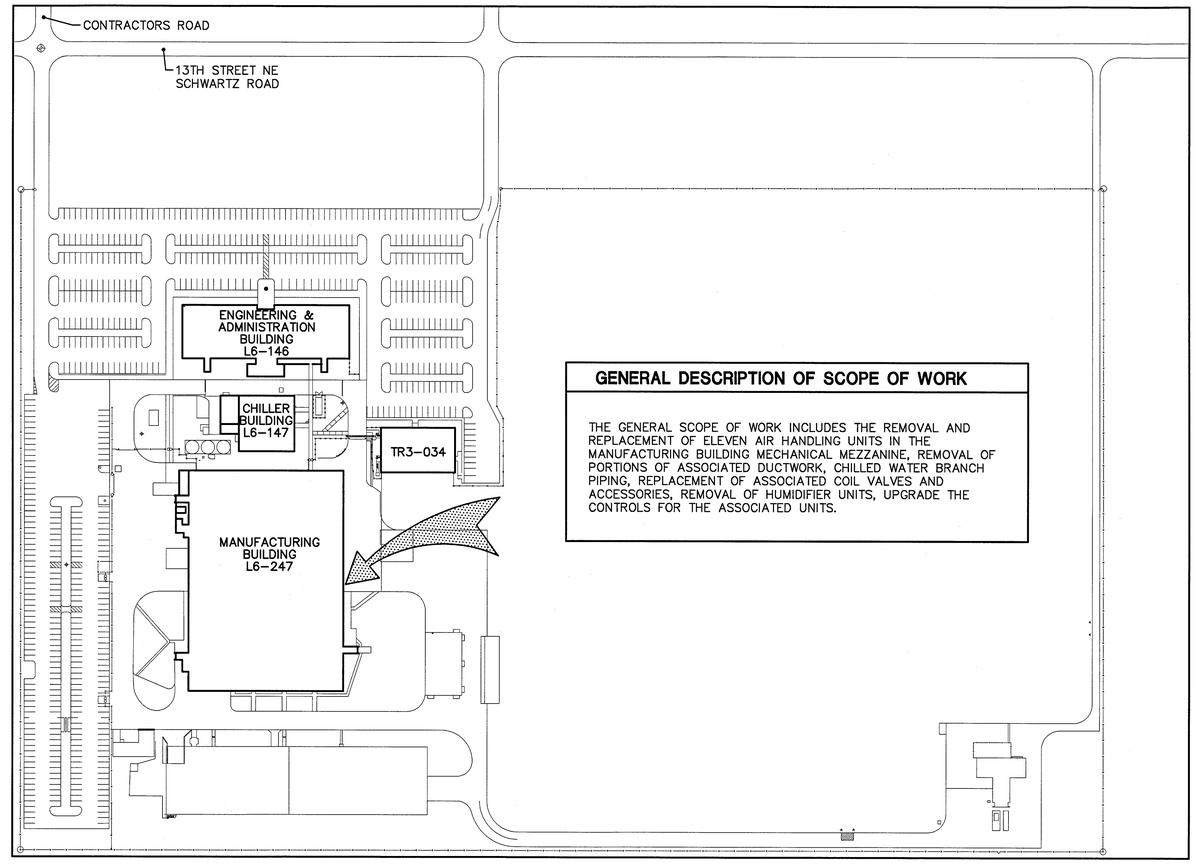

GENERAL DESCRIPTION OF SCOPE OF WORK

THE GENERAL SCOPE OF WORK INCLUDES THE REMOVAL AND REPLACEMENT OF ELEVEN AIR HANDLING UNITS IN THE MANUFACTURING BUILDING MECHANICAL MEZZANINE, REMOVAL OF PORTIONS OF ASSOCIATED DUCTWORK, CHILLED WATER BRANCH PIPING, REPLACEMENT OF ASSOCIATED COIL VALVES AND ACCESSORIES, REMOVAL OF HUMIDIFIER UNITS, UPGRADE THE CONTROLS FOR THE ASSOCIATED UNITS.

AREA MAP
SCALE: NONE

N

NOTES:

1. ALL SCALES NOTED THROUGHOUT THE DOCUMENTS ARE BASED UPON FULL SIZE "F" (28"x40") SHEETS. WHERE REDUCED SIZE DRAWINGS ARE USED THE GRAPHIC SCALES SHALL BE APPLIED TO DETERMINE THE RELATIVE SCALE OF THE REDUCED DRAWINGS. DRAWINGS SHOULD NOT BE SCALED, DIMENSIONED ELEMENTS SHALL BE USED TO DETERMINE SIZE AND LOCATION. ALL DIMENSIONS SHALL BE FIELD VERIFIED.

THIS DRAWING CREATED ON AUTOCAD 2011 AND WILL BE REVISED ONLY ON AUTOCAD 2011 SYSTEM. FILE: 79K39690- V-02 .DWG

V-02

SYM	ZONE	DESCRIPTION	DATE	APPROVED
		REVISIONS		

JOHNSON, LEVINSON RAGAN, DAVILA, INC. CONSULTING ENGINEERS
1450 Centrepark Boulevard, Suite 350 West Palm Beach, Florida 33401 (561) 689-2303 •(561) 689-2302 Fax www.jldinc.com
Certification Number 6059

SIGNATURES		DATE
DRAWN	K. GOMEZ	6/13/13
CHECKED	T. FEAGANS	6/13/13
SUBMITTED: ARCH/ENG OF RECORD MICHAEL D. DAVILA		6/13/13
ST OF LICENSURE: FL LICENSE NO: 36066		
APPROVED: T. Feagans AE DEPT HEAD- T. FEAGANS		6/13/13
NASA SYS/LDE- S. MEHTA		6/17/13

NATIONAL AERONAUTICS AND SPACE ADMINISTRATION
JOHN F. KENNEDY SPACE CENTER, NASA
KENNEDY SPACE CENTER, FLORIDA

AIR HANDLERS UPGRADES
BOOSTER FABRICATION FACILITY, BFF

VICINITY MAPS

FILE. NO.	SIZE	DWG. NO.	REV
	F	79K39690	
PROJ. NO. 98889.2a		SHEET 2	

KSC FORM 1-11 (3/76)(C/G 3/94)

NOTICE: When Government drawings, specifications, or other data are used for any purpose other than in connection with a definitely related Government procurement operation, the United States Government thereby incurs no responsibility nor obligation whatsoever; and the fact that the Government may have formulated, furnished, or in any way supplied the said drawings, specifications or other data is not to be regarded by implication or otherwise as in any manner licensing the holder or any other person or corporation, or conveying any rights or permission to manufacture, use, or sell any patented invention that may in any way be related thereto.

SHEET LISTING

SHEET NUMBER	SHEET IDENTIFICATION	DRAWING TITLE	REVISION STATUS
1	V-01	TITLE SHEET	
2	V-02	VICINITY MAPS	
3	V-03	SHEET LISTING	
4	V-04	CONSTRUCTION PHASING PLAN	
5	V-05	HAZARDOUS MATERIALS AND TESTING RESULTS	
6	M-101	LEGEND AND GENERAL NOTES	
7	M-102	MECHANICAL SCHEDULES	
8	M-103	MECHANICAL SCHEDULES	
9	M-104	MECHANICAL SCHEDULES	
10	M-105	MECHANICAL SCHEDULES	
11	M-201	MEZZANINE LEVEL AHU HVAC PLAN – DEMOLITION	
12	M-202	MEZZANINE LEVEL AHU PIPING PLAN – DEMOLITION	
13	M-203	MEZZANINE LEVEL AHU HVAC PLAN – NEW WORK	
14	M-204	MEZZANINE LEVEL AHU PIPING PLAN – NEW WORK	
15	M-205	AIR HANDLING UNIT SECTIONS	
16	M-301	MECHANICAL DETAILS	
17	M-302	MECHANICAL DETAILS	
18	M-600	INSTRUMENTATION LEGEND AND GENERAL NOTES	
19	M-601	MECHANICAL CONTROLS	
20	M-602	MECHANICAL CONTROLS	
21	M-603	MECHANICAL CONTROLS	
22	M-604	MECHANICAL CONTROLS	
23	M-605	MECHANICAL CONTROLS	
24	M-606	DETAILS	
25	PH-101	AHU EXISTING CONDITIONS PHOTOGRAPHS	
26	PH-102	AHU EXISTING CONDITIONS PHOTOGRAPHS	
27	FA-001	FIRE ALARM SITE PLAN, LEGEND AND GENERAL NOTES	
28	FA-100	MEZZANINE FIRE ALARM FLOOR PLAN – DEMOLITION	
29	E-001	ELECTRICAL LEGEND AND GENERAL NOTES	
30	E-002	ELECTRICAL SITE PLAN	
31	E-003	CONDUIT ROUTING SCHEDULE	
32	E-101	MEZZANINE LIGHTING FLOOR PLAN – DEMOLITION	
33	E-102	MEZZANINE POWER FLOOR PLAN – DEMOLITION	
34	E-103	MEZZANINE LIGHTING FLOOR PLAN – NEW WORK	
35	E-104	MEZZANINE POWER FLOOR PLAN – NEW WORK	
36	E-201	ONE-LINE DIAGRAM 'NA-MCC' AND 'NB-MCC' – EXISTING	
37	E-202	ONE-LINE DIAGRAM 'NA-MCC' AND 'NB-MCC' – NEW WORK	
38	E-301	ELECTRICAL DETAILS	
39	E-401	PANEL SCHEDULES	

THIS DRAWING CREATED ON AUTOCAD 2011 AND WILL BE REVISED ONLY ON AUTOCAD 2011 SYSTEM. FILE: 79K39690- V-03 .DWG

V-03

SYM	ZONE	DESCRIPTION	DATE	APPROVED
		REVISIONS		

JOHNSON, LEVINSON RAGAN, DAVILA, INC. CONSULTING ENGINEERS
1450 Centrepark Boulevard, Suite 350 West Palm Beach, Florida 33401 (561) 689-2303 • (561) 689-2302 Fax www.jldinc.com
Certification Number 6059

SIGNATURES		DATE
DRAWN	K. GOMEZ	6/13/13
CHECKED	T. FEAGANS	6/13/13
SUBMITTED: ARCH/ENG OF RECORD MICHAEL D. DAVILA		6/13/13
ST OF LICENSURE: FL LICENSE NO:	36066	
APPROVED: AE DEPT HEAD-	T. FEAGANS	6/13/13
NASA SYS/LDE-	S. MEHTA	6/17/13

NATIONAL AERONAUTICS AND SPACE ADMINISTRATION
JOHN F. KENNEDY SPACE CENTER, NASA
KENNEDY SPACE CENTER, FLORIDA

AIR HANDLERS UPGRADES
BOOSTER FABRICATION FACILITY, BFF

SHEET LISTING

FILE. NO.	SIZE	DWG. NO.	REV
	F	79K39690	
PROJ. NO. 98889.2a		SHEET 3	

KSC FORM 1-11 (3/76)(C/G 3/94)

NOTICE: When Government drawings, specifications, or other data are used for any purpose other than in connection with a definitely related Government procurement operation, the United States Government thereby incurs no responsibility nor obligation whatsoever; and the fact that the Government may have formulated, furnished, or in any way supplied the said drawings, specifications or other data is not to be regarded by implication or otherwise as in any manner licensing the holder or any other person or corporation, or conveying any rights or permission to manufacture, use, or sell any patented invention that may in any way be related thereto.

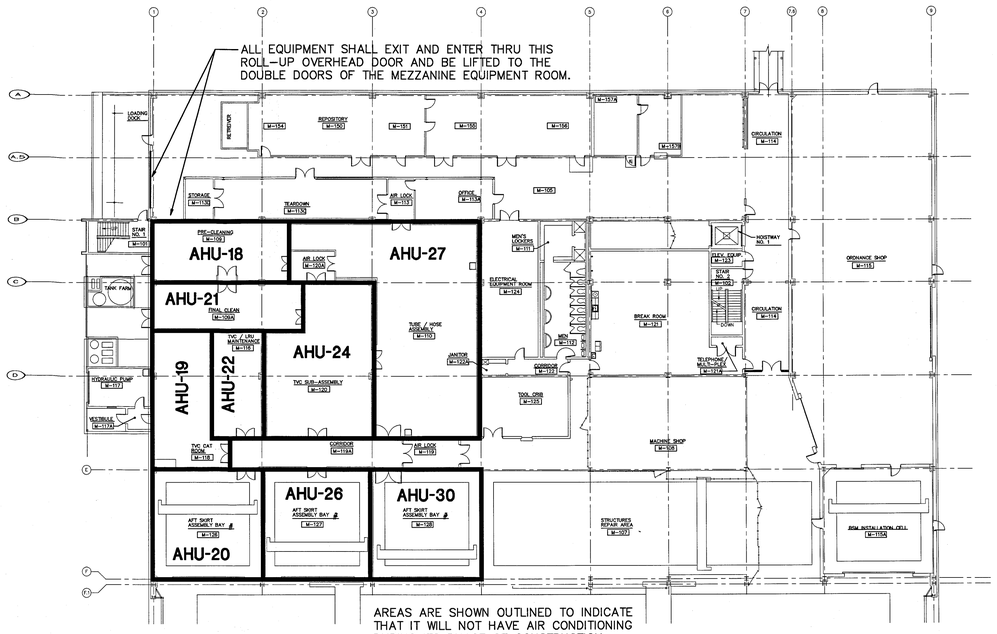

BFF GROUND FLOOR
SCALE: 1" = 30'-0"

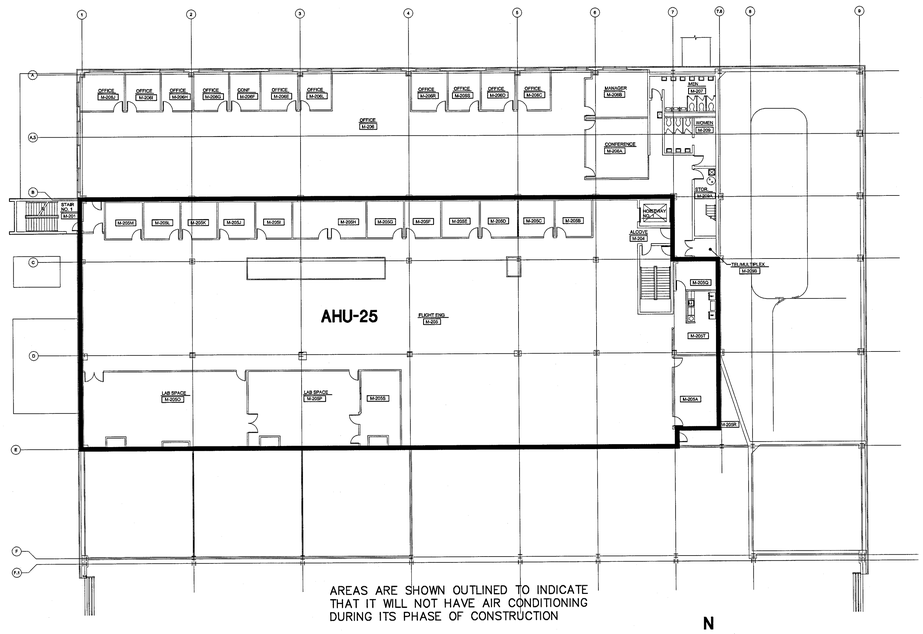

BFF SECOND FLOOR
SCALE: 1" = 30'-0"

AIR HANDLING UNIT REPLACEMENT PHASING

PHASE 1:

REMOVE AHU'S 18 AND 19 AND ASSOCIATED DUCTWORK AND PIPING AS SHOWN ON SHEET M-201 AND M202. THESE AHU'S WILL REMAIN OUT OF SERVICE UNTIL THE FINAL PHASE TO PROVIDE FLOOR CLEARANCE TO ACHIEVE PHASE 2 AND PHASE 3.

PHASE 2:

REMOVE AHU'S 21, 23 AND 25, AND ASSOCIATED DUCTWORK AND PIPING (IN ASCENDING ORDER) AND INSTALL NEW AHU'S 25, 23, AND 21 (IN DESCENDING ORDER). RETURN THESE UNITS TO NORMAL OPERATION.

PHASE 3:

REMOVE AHU'S 20, 22, 24, 26, 27, AND 30 AND ASSOCIATED DUCTWORK AND PIPING (IN ASCENDING ORDER) AND INSTALL NEW AHU'S 30, 27, 26, 25, 24, 22, AND 20 (IN DESCENDING ORDER). RETURN THESE UNITS TO NORMAL OPERATION.

PHASE 4:

INSTALL NEW AHU'S 18 AND 19. RETURN THESE UNITS TO NORMAL OPERATION.

GENERAL:

1. A TEMPORARY SHUT DOWN OF THE CHW AND HW SYSTEMS SERVING ALL OF THESE UNITS IS REQUIRED FOR PHASES 1, 2, AND 3 TO ALLOW PIPING TO BE REMOVED AND NEW SHUT OFF VALVES TO BE INSTALLED, TO CREATE A WIDE ENOUGH PATHWAY TO REMOVE EXISTING AHU'S AND INSTALL THE NEW AHU'S. ALL OF THESE EXISTING AND NEW VALVES ARE LOCATED IN THE EQUIPMENT ROOM AND ARE SHOW ON DRAWINGS M-202 AND M-204.
2. AHU'S 28, 29, 31, AND 34 SHALL REMAIN UNDISTURBED.

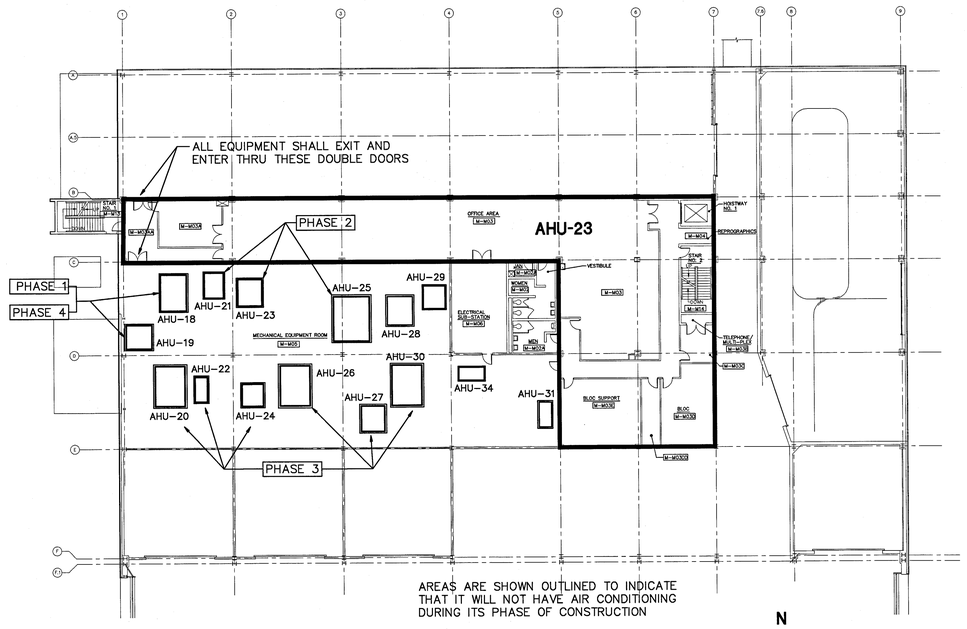

BFF MEZZANINE
SCALE: 1" = 30'-0"

THIS DRAWING CREATED ON AUTOCAD 2011 AND WILL BE REVISED ONLY ON AUTOCAD 2011 SYSTEM. FILE: 79K39690- V-04 .DWG

V-04

SYM	ZONE	DESCRIPTION	DATE	APPROVED
		REVISIONS		

JOHNSON, LEVINSON RAGAN, DAVILA, INC. CONSULTING ENGINEERS
1450 Centrepark Boulevard, Suite 350 West Palm Beach, Florida 33401 (561) 689-2303 • (561) 689-2302 Fax www.jldinc.com
Certification Number 6059

SIGNATURES		DATE
DRAWN	K. GOMEZ	6/13/13
CHECKED	T. FEAGANS	6/13/13
SUBMITTED: ARCH/ENG OF RECORD	MICHAEL D. DAVILA	6/13/13
ST OF LICENSURE:	FL	
LICENSE NO:	36066	
APPROVED:	AE DEPT HEAD- T. FEAGANS	6/13/13
	NASA SYS/LDE- S. MEHTA	6/17/13

NATIONAL AERONAUTICS AND SPACE ADMINISTRATION
JOHN F. KENNEDY SPACE CENTER, NASA
KENNEDY SPACE CENTER, FLORIDA

AIR HANDLERS UPGRADES
BOOSTER FABRICATION FACILITY, BFF

CONSTRUCTION PHASING PLAN

FILE. NO.	SIZE	DWG. NO.	REV
	F	79K39690	
PROJ. NO. 98889.2a		SHEET 4	

KSC FORM 1-11 (3/76)(C-/G 3/94)

NOTICE: When Government drawings, specifications, or other data are used for any purpose other than in connection with a definitely related Government procurement operation, the United States Government thereby incurs no responsibility nor obligation whatsoever; and the fact that the Government may have formulated, furnished, or in any way supplied the said drawings, specifications or other data is not to be regarded by implication or otherwise as in any manner licensing the holder or any other person or corporation, or conveying any rights or permission to manufacture, use, or sell any patented invention that may in any way be related thereto.

ASBESTOS TEST RESULTS

JOB LOCATION	SAMPLE NO.	COMPONENT SAMPLED	LOCATION	DESCRIPTION	ASBESTOS MATERIAL
AHU MEZZANINE	BFFA-04	WHITE DUCT MASTIC	SUPPLY DUCT	WHITE SOFT	NONE DETECTED
AHU MEZZANINE	BFFA-05	WHITE DUCT MASTIC	SUPPLY DUCT	WHITE SOFT	NONE DETECTED
AHU MEZZANINE	BFFA-06	WHITE DUCT MASTIC	SUPPLY DUCT	WHITE SOFT	NONE DETECTED
AHU MEZZANINE	BFFA-07	TAN DUCT MASTIC	DUCT INSULATION PINS	TAN SOFT	NONE DETECTED
AHU MEZZANINE	BFFA-08	TAN DUCT MASTIC	DUCT INSULATION PINS	TAN SOFT	NONE DETECTED
AHU MEZZANINE	BFFA-09	TAN DUCT MASTIC	DUCT INSULATION PINS	TAN SOFT	NONE DETECTED
AHU MEZZANINE	BFFA-10	WHITE DUCT MASTIC	OUTDOOR AIR DUCT	WHITE SOFT	NONE DETECTED
AHU MEZZANINE	BFFA-11	WHITE DUCT MASTIC	OUTDOOR AIR DUCT	WHITE SOFT	NONE DETECTED
AHU MEZZANINE	BFFA-12	WHITE DUCT MASTIC	OUTDOOR AIR DUCT	WHITE SOFT	NONE DETECTED
AHU MEZZANINE	BFFA-13	RED DUCT MASTIC	RETURN AIR DUCT	RED SOFT	NONE DETECTED
AHU MEZZANINE	BFFA-14	RED DUCT MASTIC	RETURN AIR DUCT	RED SOFT	NONE DETECTED
AHU MEZZANINE	BFFA-15	RED DUCT MASTIC	RETURN AIR DUCT	RED SOFT	NONE DETECTED
AHU MEZZANINE	BFFA-16	WHITE DUCT MASTIC	RETURN AIR DUCT	WHITE SOFT	NONE DETECTED
AHU MEZZANINE	BFFA-17	WHITE DUCT MASTIC	RETURN AIR DUCT	WHITE SOFT	NONE DETECTED
AHU MEZZANINE	BFFA-18	WHITE DUCT MASTIC	RETURN AIR DUCT	WHITE SOFT	NONE DETECTED
AHU MEZZANINE	BFFA-19	PIPE FITTING INSULATION	HW PIPE	YELLOW FIBROUS	NONE DETECTED
AHU MEZZANINE	BFFA-20	PIPE FITTING INSULATION	HW PIPE	WHITE SOFT	NONE DETECTED
AHU MEZZANINE	BFFA-21	PIPE FITTING INSULATION	HW PIPE	YELLOW FIBROUS	NONE DETECTED
AHU MEZZANINE	BFFA-22	PIPE FITTING INSULATION	CHW PIPE	WHITE SOFT	NONE DETECTED
AHU MEZZANINE	BFFA-23	PIPE FITTING INSULATION	CHW PIPE	WHITE SOFT	NONE DETECTED
AHU MEZZANINE	BFFA-24	PIPE FITTING INSULATION	CHW PIPE	WHITE SOFT	NONE DETECTED

SPECIFIC NOTES

A. REFER TO M SERIES SHEETS FOR APPROXIMATE SAMPLE LOCATIONS.

B. THE EXTENT OF TESTING IS LIMITED TO ACCESSIBLE, NON-CONCEALED ITEMS AT THE LOCATIONS IDENTIFIED. ACCORDINGLY IT CANNOT BE CONSTRUED AS BEING A COMPREHENSIVE, DEFINITIVE REPRESENTATION OF ALL HAZARDOUS MATERIALS WHICH MAY BE PRESENT.

C. THE GOVERNMENT DOES NOT GUARANTEE NOR WARRANT THAT ALL POSSIBLE ADVERSE MATERIALS HAVE BEEN DEFINED.

D. WHERE THERE IS ANY DOUBT AS TO THE COMPOSITION OF MATERIALS OR COATINGS SCHEDULED FOR DEMOLITION REQUEST DIRECTION FROM THE CONTRACTING OFFICER PRIOR TO PROCEEDING WITH THE WORK.

HAZARDOUS MATERIALS

HAZARDOUS MATERIALS ARE PRESENT IN THE LOCATIONS TO BE WORKED IN UNDER THIS PROJECT, KNOWN MATERIALS ARE IDENTIFIED BELOW. REFER TO THE PROJECT SPECIFICATIONS FOR ADDITIONAL INFORMATION AND REQUIREMENTS WHERE HAZARDOUS MATERIALS ARE ENCOUNTERED.

ASBESTOS:

EXISTING PIPE GASKETS SHALL BE ASSUMED TO BE ASBESTOS CONTAINING MATERIAL (ACM).

LIMITED CAULKING, SEALANTS, AND INSULATION HAS BEEN TESTED FOR ASBESTOS AND THE RESULTS NOTED ON THIS SHEET. WHERE SIMILAR NON-TESTED CONDITIONS ARE ENCOUNTERED THEY SHALL BE ASSUMED TO BE THE SAME AS THE TESTED MATERIALS.

SHOULD ASBESTOS BE SUSPECTED/DETECTED AND MUST BE DISTURBED IT SHALL BE ABATED AND DISPOSED OF IN CONFORMANCE WITH SPECIFICATIONS SECTION 02 82 13.00 98 "ASBESTOS ABATEMENT". ABATEMENT IS LIMITED TO THE AREA OF DISTURBANCE.

ASBESTOS WASTE SHALL BE PROPERLY PACKAGED AND DISPOSED OF IN ACCORDANCE WITH THE CONTRACTORS APPROVED ASBESTOS ABATEMENT IMPLEMENTATION PLAN.

WHERE DRILLING OF ANY CONCRETE OR BLOCK WALLS OR FLOORS IS REQUIRED, NASA REQUIREMENTS FOR CONTROL OF, AND PERSONAL PROTECTIVE EQUIPMENT FOR AIRBORNE SILICA SHALL BE FOLLOWED. IF DISTURBANCE WILL OCCUR, A SITE SPECIFIC HEALTH AND SAFETY PLAN MUST BE SUBMITTED TO THE INDUSTRIAL HYGIENE OFFICE FOR REVIEW PRIOR TO START OF WORK. ONCE REVIEWED, RECOMMENDATIONS TO ASSURE COMPLIANCE WITH ALL OSHA AND NASA REQUIREMENTS WILL BE OFFERED, IF NEEDED.

	YES	NO		YES	NO
SUSPECTED HEAVY METALS	☒	☐	SUSPECTED ASBESTOS	☐	☒

THIS DRAWING CREATED ON AUTOCAD 2011 AND WILL BE REVISED ONLY ON AUTOCAD 2011 SYSTEM. FILE: 79K39690- V-05 .DWG

V-05

SYM	ZONE	DESCRIPTION	DATE	APPROVED
		REVISIONS		

JOHNSON, LEVINSON RAGAN, DAVILA, INC. CONSULTING ENGINEERS
1650 Centrepark Boulevard, Suite 350 West Palm Beach, Florida 33401 (561) 689-2303 • (561) 689-2302 Fax www.jldlinc.com
Certification Number 6059

SIGNATURES		DATE
DRAWN	K. GOMEZ	6/13/13
CHECKED	T. FEAGANS	6/13/13
SUBMITTED: ARCH/ENG OF RECORD MICHAEL D. DAVILA		6/13/13
ST OF LICENSURE: FL LICENSE NO: 36066		
APPROVED: T. Feagans AE DEPT HEAD- T. FEAGANS		6/13/13
Sunita Mehta NASA SYS/LDE- S. MEHTA		6/17/13

NATIONAL AERONAUTICS AND SPACE ADMINISTRATION
JOHN F. KENNEDY SPACE CENTER, NASA
KENNEDY SPACE CENTER, FLORIDA

AIR HANDLERS UPGRADES
BOOSTER FABRICATION FACILITY, BFF

HAZARDOUS MATERIALS AND TESTING RESULTS

FILE. NO.	SIZE	DWG. NO.	REV
	F	79K39690	

PROJ. NO. 98889.2a SHEET 5

KSC FORM 1-11 (3/76)(C/G 3/94)

NOTICE: When Government drawings, specifications, or other data are used for any purpose other than in connection with a definitely related Government procurement operation, the United States Government thereby incurs no responsibility nor obligation whatsoever; and the fact that the Government may have formulated, furnished, or in any way supplied the said drawings, specifications or other data is not to be regarded by implication or otherwise as in any manner licensing the holder or any other person or corporation, or conveying any rights or permission to manufacture, use, or sell any patented invention that may in any way be related thereto.

MECHANICAL LEGEND

AD	ACCESS DOOR
AFF	ELEVATION – ABOVE FINISHED FLOOR
AHU	AIR HANDLING UNIT
AP	ACCESS PANEL
BHP	BRAKE HORSE POWER
BOD	ELEVATION – BOTTOM OF DUCT
CE	CENTER ELEVATION ABOVE FINISHED FLOOR
CFM	CUBIC FEET PER MINUTE
CHW	CHILLED WATER
DB/WB	DRY BULB/WET BULB
DIA OR ø	DIAMETER
DN	DOWN
EF	EXHAUST FAN
ENT	ENTERING
ESP	EXTERNAL STATIC PRESSURE (INCHES WATER)
EWT	ENTERING WATER TEMPERATURE
EX	EXISTING
EXT	EXTERNAL
EX–FB	EXISTING FILTER BANK
FD	FLOOR DRAIN
FM	FLOW METER
FMS	FACILITY MANAGEMENT SYSTEM
FPM	FEET PER MINUTE
FOB	FLAT ON BOTTOM
FOT	FLAT ON TOP
FT	FEET
GPM	GALLONS PER MINUTE
HC	HEATING COIL
HP	HORSEPOWER
I.D.	INTERNAL DIMENSION
KW	KILOWATTS
LBS	POUNDS
LWT	LEAVING WATER TEMPERATURE
MAX	MAXIMUM
MBH	1000 BRITISH THERMAL UNITS
MIN	MINIMUM
NC	NORMALLY CLOSED
NO	NORMALLY OPEN
OA	OUTDOOR AIR
PD	PRESSURE DROP
PH	PHASE
PSI(G)	POUNDS PER SQUARE INCH (GAUGE)
R	RISE
RA	RETURN AIR
RLA	RUNNING LOAD AMPS
RHC	REHEAT COIL
RG	RETURN GRILLE
RPM	REVOLUTIONS PER MINUTE
SA	SUPPLY AIR
SENS	SENSIBLE
SH	SPRINKLER HEAD
SP	STATIC PRESSURE
TE	TOP ELEVATION
TEFC	TOTALLY ENCLOSED FAN COOLED
TEMP	TEMPERATURE
TOD	TOP OF DUCT
T.S.P.	TOTAL STATIC PRESSURE
VAC	VOLTS ALTERNATING CURRENT
VAV	VARIBLE AIR VOLUME
WPD	WATER PRESSURE DROP (INCHES WATER)

MARK / UNIT NO.	NEW EQUIPMENT DESIGNATION
AHU 8	EXISTING EQUIPMENT DESIGNATION
DETAIL / SHEET WHERE TAKEN / SHEET WHERE SHOWN	SECTION / DETAIL DESIGNATION
EX–SG XX–CFM	EXISTING SUPPLY GRILLE
EX–RG XX–CFM	EXISTING RETURN GRILLE
EX–CD XX–CFM	EXISTING CEILING GRILLE
	REVISIONS
	NEW TO EXISTING CONNECTION DESIGNATION
A	FLAG NOTE DESIGNATION
C	CONDENSATE DRAIN LINE
CHWS	CHILLED WATER SUPPLY
CHWR	CHILLED WATER RETURN
HWS	HEATING WATER SUPPLY
HWR	HEATING WATER RETURN
T	TEMPERATURE SENSOR
DPS	DIFFERENTIAL PRESSURE SENSOR
	PRESSURE GAUGE
P	SMOKE DETECTOR (PHOTOELECTRIC)
DP	DIFFERENTIAL PRESSURE SWITCH
	PIPE BREAK (SINGLE AND DOUBLE LINE)
	BREAK IN DUCTWORK
	RISE OR DROP (DOUBLE LINE)
	RETURN, EXHAUST OR OUTSIDE AIR DUCT
	SUPPLY DUCT
	BUTTERFLY VALVE IN RISE (DOUBLE LINE)
	UNION JOINT (SINGLE LINE)
	UNION JOINT (DOUBLE LINE)
	EXISTING PIPING (DOUBLE LINE)
	EXISTING PIPING (SINGLE LINE)
	EXISTING PIPING TO BE REMOVED (DOUBLE LINE)
	EXISTING PIPING TO BE REMOVED (SINGLE LINE)
M	CONTROL VALVE MOTORIZED (DOUBLE LINE)
	GATE VALVE (DOUBLE LINE)
	FLOW MEASUREMENT/BALANCE VALVE (DOUBLE LINE)
	TEE BRANCH
	BRANCH OUT OF BOTTOM
	BRANCH OUT OF TOP
	MANUAL BUTTERFLY SHUTOFF VALVE (SINGLE LINE)
M	BUTTERFLY CONTROL VALVE (CV) ELECTRIC MOTORIZED
	MANUAL BUTTERFLY SHUTOFF VALVE (DOUBLE LINE)
	ELBOW – UP
	ELBOW – DOWN
	RISE OR DROP (SINGLE LINE)
	NEW PIPING (SINGLE LINE)
	DIRECTION OF FLOW
	CONCENTRIC PIPE INCREASER / REDUCER

	NEW PIPING (DOUBLE LINE)
	PIPE WITH FLANGE, BLIND FLANGE
	GATE VALVE IN RISE
	BUTTERFLY VALVE IN RISE
	BALL VALVE
	DIRECTION OF DOWNWARD PITCH
	FLOW METER – VENTURI (SINGLE LINE)
	FLOW METER – VENTURI (DOUBLE LINE)
	GAUGE COCK
	FLEXIBLE PIPE CONNECTOR (EXPANSION JOINT)
	GATE VALVE (SINGLE LINE)
	THERMOMETER WITH WELL (DIRECT READING)
M	AUTOMATIC CONTROL VALVE 2–WAY OR 3–WAY AS INDICATED
	FLOW MEASUREMENT/BALANCE VALVE (SINGLE LINE)
	AIR VENT, MANUAL (MAV)
	THERMOMETER WELL
	"Y" STRAINER, CAPPED HOSE END BALL BLOWDOWN
	CAP ON END OF PIPE
	TEE – UP, BRANCH OUT OF TOP
	TEE – DOWN, BRANCH OUT OF BOTTOM
(0–60)	PRESSURE GAUGE WITH GAUGE COCK (DIAL RANGE WHERE NOTED)
	CEILING SUPPLY AIR DEVICE → ARROW DENOTES DIRECTION OF THROW
24x12	RECTANGULAR DUCT SIZE DESIGNATION. FIRST DESIGNATION IS SIDE SHOWN.
	TURNING VANES (NUMBER OF VANES BASED ON ACTUAL DUCT SIZE & NOT ON SCHEMATIC SYMBOL ON DRAWING – SEE SMACNA)
	FLEXIBLE DUCT CONNECTION
	MANUAL VOLUME DAMPER (MD)
AP	FIRE DAMPER WITH DUCT ACCESS PANEL (DOOR)
DN	DROP IN DIRECTION OF AIR FLOW
R	RISE IN DIRECTION OF AIR FLOW
M	AUTOMATIC MOTORIZED DAMPER
	TRANSITIONS: F. O. T. = FLAT ON TOP OR F. O. B. = FLAT ON BOTTOM
	SQUARE TO ROUND DUCT TRANSITION
	DOUBLE DASHED LINE INDICATES EXISTING
	CONTINUOUS BOLD LINE INDICATES NEW
	HATCHING INDICATES DEMOLITION WORK
H	HUMIDITY SENSOR
T	THERMOSTAT/TEMPERATURE SENSOR
BFFA–4,5,6	ASBESTOS SAMPLE TEST NUMBER AND LOCATION

GENERAL PROJECT NOTES

A. DEMOLITION AND INSTALLATION TASKS SHALL BE PERFORMED IN PHASES. REFER TO PROJECT PHASING NOTES ON SHEET V–4, AND SEE SPECIFICATIONS.

B. REFER TO THE SPECIAL CONDITIONS FOR LIMITATIONS ASSOCIATED WITH SHUTDOWN OF EXISTING SYSTEMS. SYSTEM–WIDE OUTAGES WILL BE LIMITED, AND THE FACILITIES AND SYSTEMS WILL BE OCCUPIED AND REMAIN IN USE THROUGHOUT CONSTRUCTION. THE CONTRACTOR SHALL SUBMIT A DETAILED CONSTRUCTION PHASING PLAN DETAILING ALL PROPOSED OUTAGE IMPACTS AND DURATIONS FOR APPROVAL PRIOR TO THE START OF CONSTRUCTION.

C. WHERE ISOLATION VALVES ARE NOT PRESENT, OR ARE BEING REMOVED, A SHUT DOWN WILL BE REQUIRED. COORDINATE SHUT–DOWNS TO MINIMIZE DURATION AND TO ENCOMPASS AS MUCH NEW WORK AS POSSIBLE.

D. DEMOLITION DRAWINGS ARE INTENDED TO GRAPHICALLY REPRESENT THE MAJOR TASKS TO BE PERFORMED. MINOR ELEMENTS OF THE WORK SUCH AS SUPPORTS, HANGERS, SMALL DIAMETER PIPING, CONTROLS CONDUIT, TUBING AND SIMILAR RELATED WORK WITHIN AREAS TO BE DEMOLISHED MAY NOT BE INDICATED, BUT SHALL BE REMOVED OR CAPPED WITH MATERIALS AND JOINING METHODS TO MATCH THE EXISTING AS DIRECTED BY THE CONTRACTING OFFICER. DRAWINGS DO NOT INDICATE ALL ITEMS PRESENT IN EACH SPACE.

E. EXISTING PIPE SIZES AND LOCATIONS SHOWN ARE APPROXIMATE AND SHALL BE CONFIRMED BY THE CONTRACTOR PRIOR TO FABRICATION OF NEW WORK.

F. ELEVATIONS GIVEN: B.E. = BOTTOM ELEVATION; T.E. = TOP ELEVATION; C.E. = CENTERLINE ELEVATION ARE APPROXIMATE, PROVIDED FOR THE CONTRACTORS CONVENIENCE, AND SHALL BE FIELD VERIFIED PRIOR TO FABRICATION OR INSTALLATION OF WORK.

G. THESE DRAWINGS SHOW THE GENERAL ARRANGEMENT OF PIPING AND EQUIPMENT ONLY, ARE NOT SUITABLE AS USE FOR FABRICATION AND DO NOT INDICATE EVERY OFFSET, BEND, FITTING OR MODIFICATION OF PIPING REQUIRED FOR INSTALLATION, AND TO MAINTAIN THE MANUFACTURERS RECOMMENDED CLEARANCES. THE CONTRACTOR SHALL PREPARE SHOP DRAWINGS INDICATING THE PROPOSED INSTALLATION ROUTING AND SUPPORT DETAILS WITH DISTANCES FROM FIXED STRUCTURAL ELEMENTS SUCH AS BEAMS, COLUMNS AND ELEVATIONS NOTED TO CLEARLY DEMONSTRATE CONTRACTOR COORDINATION WITH EXISTING FIELD CONDITIONS.

H. THE CONTRACTOR SHALL CAREFULLY EXAMINE THE AREAS AND EXISTING CONDITIONS ASSOCIATED WITH THE WORK TO BE PERFORMED TO THOROUGHLY FAMILIARIZE HIMSELF WITH EXISTING FIELD CONDITIONS AND DIFFICULTIES THAT AFFECT EXECUTION OF THE WORK, AS WELL AS TO IDENTIFY SYSTEMS AND EQUIPMENT WHICH ARE TO REMAIN IN PLACE AND MUST BE PROTECTED FROM HIS ACTIVITIES.

I. WHERE SECTIONS OF PIPING ARE BEING REMOVED FOR REWORK THE CONTRACTOR SHALL PROVIDE TEMPORARY BRACING/HANGERS FOR PIPING WHICH IS TO REMAIN. WHERE PIPING IS BEING DEMOLISHED, THE EXISTING PIPING WHICH IS TO REMAIN SHALL BE SUPPORTED.

J. TYPICAL SUPPORT DETAILS ARE INDICATED. THE CONTRACTOR SHALL COORDINATE EXACT CONFIGURATION, QUANTITY, AND DIMENSIONS WITH THE ACTUAL ROUTING AND EQUIPMENT FURNISHED.

K. PROVIDE MANUAL AIR VENTS AT PIPING SYSTEM HIGH POINTS, AND MANUAL AIR VENTS AND DRAINS IN SECTIONS OF PIPING WHICH MAY BE ISOLATED TO FACILITATE TESTING, DRAINING AND REFILLING THE PIPING SYSTEM.

L. THE EXACT EQUIPMENT SIZE, CONFIGURATION, MAINTENANCE SERVICE AREAS, PIPING, AND ELECTRICAL CONNECTIONS VARY BY MANUFACTURER, THE COORDINATION OF WHICH SHALL BE THE EXCLUSIVE RESPONSIBILITY OF THE CONTRACTOR. THE LAYOUT SHOWN ON THE DRAWINGS IS BASED UPON THE REQUIREMENTS OF A PARTICULAR MANUFACTURER AS SELECTED BY THE ENGINEER AS THE BASIS OF DESIGN. THE CONTRACTOR SHALL SUBMIT EQUIPMENT ROOM COORDINATION DRAWINGS INDICATING THE ACTUAL SIZE AND CONFIGURATION OF PROPOSED EQUIPMENT DRAWN TO SCALE INCLUDING THE MANUFACTURER'S RECOMMENDED MAINTENANCE SERVICE AREAS AND MECHANICAL AND ELECTRICAL INTERFACE REQUIREMENTS INCLUDING PIPING AND ELECTRICAL CONNECTIONS AT THE TIME OF EQUIPMENT SHOP DRAWING SUBMITTAL.

M. THE CONTRACTOR SHALL PROVIDE ALL NECESSARY COORDINATION BETWEEN ALL INVOLVED TRADES AND PARTICIPATE IN SYSTEM COMMISSIONING.

N. EXISTING ROUTING AND SIZES OF PIPING AND DUCTWORK HAS BEEN TAKEN FROM EXISTING PLANS AND SHALL BE FIELD VERIFIED.

O. WHERE INSULATED PIPING IS INDICATED TO REMAIN AND BE RECONNECTED, THE INSULATION/JACKETING ON THE WORK TO REMAIN SHALL BE REMOVED BACK TO THE FIRST FULL SECTION (JOINT) NOT OTHERWISE DISTURBED BY THE DEMOLITION AND BE REPLACED. NEW INSULATION THICKNESS AND JACKETING SHALL MATCH THE EXISTING.

AIR HANDLING UNIT SCHEDULE NOTE

THREE AIR HANDLING UNIT MANUFACTURERS HAVE BEEN SCHEDULED.

ONE MANUFACTURER SHALL BE SELECTED FOR ALL AIR HANDLERS.

THE CONTRACTOR SHALL BE RESPONSIBLE FOR COORDINATING THE EXACT UNIT SIZE WITH EXISTING AVAILABLE SPACE, AS WELL AS EXISTING DUCT AND PIPE CONNECTION CONFIGURATIONS.

DETAIL CALL-OUT DESIGNATION

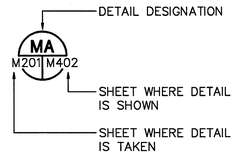

PHOTOGRAPH CALL-OUT DESIGNATION

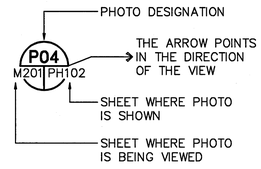

SYM	ZONE	DESCRIPTION	DATE	APPROVED
		REVISIONS		

JOHNSON, LEVINSON RAGAN, DAVILA, INC. CONSULTING ENGINEERS
1450 Centrepark Boulevard, Suite 350 West Palm Beach, Florida 33401 (561) 689-2303 •(561) 689-2302 Fax www.jldinc.com
Certification Number 6059

SIGNATURES		DATE
DRAWN	K. GOMEZ	6/13/13
CHECKED	T. FEAGANS	6/13/13
SUBMITTED: ARCHITECT OF RECORD MICHAEL D. DAVILA		6/13/13
ST OF LICENSURE:	FL	
LICENSE NO:	36066	
APPROVED: AE DEPT HEAD– T. FEAGANS		6/13/13
NASA SYS/LDE– S. MEHTA		6/17/13

NATIONAL AERONAUTICS AND SPACE ADMINISTRATION
JOHN F. KENNEDY SPACE CENTER, NASA
KENNEDY SPACE CENTER, FLORIDA

AIR HANDLERS UPGRADES
BOOSTER FABRICATION FACILITY, BFF

LEGEND AND GENERAL NOTES

FILE. NO.	SIZE	DWG. NO.	REV
	F	79K39690	
PROJ. NO. 98889.2a		SHEET 6	

THIS DRAWING CREATED ON AUTOCAD 2011 AND WILL BE REVISED ONLY ON AUTOCAD 2011 SYSTEM. FILE: 79K39690– M–101.DWG

M-101

KSC FORM 1–11 (3/76)(C/G 3/94)

NOTICE: When Government drawings, specifications, or other data are used for any purpose other than in connection with a definitely related Government procurement operation, the United States Government thereby incurs no responsibility nor obligation whatsoever; and the fact that the Government may have formulated, furnished, or in any way supplied the said drawings, specifications or other data is not to be regarded by implication or otherwise as in any manner licensing the holder or any other person or corporation, or conveying any rights or permission to manufacture, use, or sell any patented invention that may in any way be related thereto.

AIR HANDLING UNIT SCHEDULE

	BLOWER UNIT													CHILLED WATER COOLING COIL															HOT WATER HEATING COIL										
PLAN MARK	MAKE	MODEL NUMBER	OUTDOOR AIR CFM	SUPPLY AIR CFM	STATIC PRESSURE INCHES OF WATER		BLOWER RPM	MOTOR					UNIT TYPE	FACE AREA FT^2	FACE VELOCITY FPM	AIR TEMP F				TOTAL CAPACITY MBH	SENSIBLE CAPACITY MBH	WATER TEMP F		GPM	WATER PRESSURE DROP FEET H_2O	NUMBER OF ROWS	FINS PER INCH	AIR SIDE PRESSURE DROP INCHES H_2O	ROWS	FINS/ INCH	FACE VEL.	MAX PD (IN)		GPM	TOTAL MBH	AIR DB		WATER TEMP		REMARKS
					EXTERNAL	TOTAL		HP	BHP	RPM	VOLTS	PH				ENTER		LEAVE				ENTER	LEAVE									AIR	WATER			ENTER	LEAVE	ENTER	LEAVE	
																DB	WB	DB	WB																					
AHU-18	CARRIER	39M-25	80	12400	1.20	3.53	1999	15	13.7	1750	460	3	SZ C	24.4	508	75.1	61.8	51.0	50.8	391	314	44	54	79	3	8	11	1.11	2	8	508	0.21	0.9	51	508	53.1	83.5	200	165	1 2 3 4 5 7 8 9 10 11 12 14 15
AHU-19	CARRIER	39M-17	740 / 1440	7390	2.40	4.46	2380	10	9.2	1750	460	3	SZ B	16.9	436	78.0	64.8	50.2	50.0	306	213	44	54	62	11	8	11	0.96	2	8	436	0.16	0.2	26	257	51.0	84.4	200	165	1 2 3 4 5 7 8 9 10 11 12 13 14 15
AHU-20	CARRIER	39M-36	1840	18360	2.75	4.85	2131	25	24.7	1750	460	3	SZ A	36.6	500	76.5	63.5	53.8	53.2	479	426	44	54	96	4	8	8	0.94	2	8	500	0.21	3.1	62	622	52.3	83.6	200	165	1 2 3 4 5 7 8 9 10 11 12 14 15
AHU-21	CARRIER	39M-08	155 / 3255	3255	2.90	4.94	3243	7.5	5.2	1750	460	3	SZ D	7.6	426	90.0	80.0	52.7	52.7	300	120	44	54	61	19	8	11	0.98	1 2	8 8	426 426	0.06 0.10	0.4 0.4	5.6 10.5	56 105	35.0 51.0	51.0 79.4	200	165	1 2 3 4 5 6 7 8 9 10 11 12 13 14 15
AHU-22	CARRIER	39M-03	180	1815	1.40	3.78	2366	3	2.7	1750	460	3	SZ A	3.5	523	76.5	64.5	54.0	53.8	59	43	44	54	12	1	8	11	1.20	2	8	523	0.22	0.3	8.7	87	44.6	89.0	200	165	1 2 3 4 5 7 8 9 10 11 12 14 15
AHU-23	CARRIER	39M-17	955	7755	1.65	3.79	2323	10	8.6	1750	460	3	SZ B	16.9	458	76.8	63.8	50.3	50.1	293	213	44	54	59	10	8	11	1.01	2	8	458	0.18	0.4	16.1	162	65.7	85.0	200	165	1 2 3 4 5 7 8 9 10 11 12 14 15
AHU-24	CARRIER	39M-12	505 / 1225	5045	2.75	4.55	2484	7.5	6.4	1750	460	3	SZ A	12.6	399	78.7	67.7	54.5	54.1	216	129	44	54	44	2	8	8	0.73	2	8	399	0.14	1.1	18.4	184	53.2	86.9	200	165	1 2 3 4 5 7 8 9 10 11 12 13 14 15
AHU-25	CARRIER	39M-50	780	23050	1.65	3.57	1433	25	23.8	1750	460	3	SZ A	50.5	456	75.5	62.3	51.9	51.4	726	583	44	54	146	5	8	8	0.81	2	8	456	0.18	0.2	25	250	73.6	83.6	200	165	1 2 3 4 5 7 8 9 10 11 12 14 15
AHU-26	CARRIER	39M-36	1840	18360	2.75	4.85	2131	25	24.7	1750	460	3	SZ A	36.6	500	76.5	63.5	53.8	53.2	479	426	44	54	96	4	8	8	0.94	2	8	500	0.21	3.1	62	622	52.3	83.6	200	165	1 2 3 4 5 7 8 9 10 11 12 14 15
AHU-27	CARRIER	39M-21	970 / 1770	9720	2.65	4.63	2141	15	11.6	1750	460	3	SZ A	21.4	453	77.7	65.8	54.5	54.1	328	228	44	54	66	2	8	8	0.86	2	8	453	0.18	3.4	34	335	52.5	84.4	200	165	1 2 3 4 5 7 8 9 10 11 12 13 14 15
AHU-30	CARRIER	39M-36	1840	18360	2.75	4.85	2131	25	24.7	1750	460	3	SZ A	36.6	500	76.5	63.5	53.8	53.2	479	426	44	54	96	4	8	8	0.94	2	8	500	0.21	3.1	62	622	52.3	83.6	200	165	1 2 3 4 5 7 8 9 10 11 12 14 15

1. DOUBLE WALL PRE-INSULATED CONSTRUCTION FOR ALL UNIT MODULES
2. HORIZONTAL DRAW THRU FOR ALL UNITS
3. TEFC PREMIUM EFFICIENCY FAN MOTOR
4. FILTER MIXING BOX SECTION WITH ACCESS DOOR AND 30% EFFICIENT 2" THICK FILTERS
5. COOLING COIL SECTION WITH SLOPED STAINLESS STEEL DRAIN PAN
6. AHU-21 CONTAINS A PRE-HEAT COIL UPSTREAM OF THE COOLING COIL, UPPER INFORMATION IS THE PRE-HEAT COIL AND LOWER INFORMATION IS THE REHEAT COIL
7. HOT WATER REHEAT COIL SECTION WITH SLOPED STAINLESS STEEL DRAIN PAN
8. FAN SECTION WITH AIRFOIL TYPE BLOWER AND ACCESS DOORS ON BOTH SIDES OF UNIT
9. SEE FLOOR PLAN FOR SUPPLY DUCT DISCHARGE CONFIGURATION AND FOR RETURN DUCT INLET CONFIGURATION
10. SEE FLOOR PLAN FOR LEFT HAND OR RIGHT HAND PIPING AND DRAIN CONNECTIONS
11. FAN MOTOR AND DRIVE SHALL BE INTERNALLY ISOLATED
12. PROVIDE DIFFERENTIAL PRESSURE GAUGE AND TUBING ACROSS ALL FILTER MODULES
13. TWO NUMBERS IN THE OUTDOOR AIR COLUMN INDICATED MINIMUM / MAXIMUM AIRFLOW RATES
14. THIS AHU SCHEDULE INFORMATION IS A LIKE-FOR-LIKE REPLACEMENT, ALL INFORMATION IS TAKEN FROM AS-BUILT DOCUMENTS
15. AHU COMPONENTS AND MODULE SECTIONS MUST FIT THRU AN EXISTING DOUBLE DOOR OPENING WHICH MEASURES 70" WIDE BY 83" HIGH

HC = HEATING COIL
CC = COOLING COIL
PHC = PREHEAT COIL
FMB = ANGLED FILTER MIXING BOX
SA = SUPPLY AIR
RA = RETURN AIR

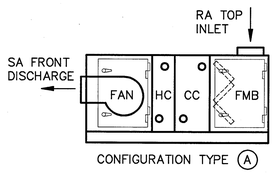

CONFIGURATION TYPE A

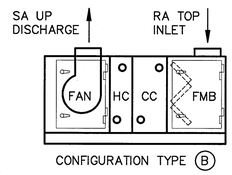

CONFIGURATION TYPE B

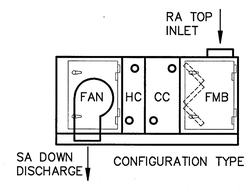

CONFIGURATION TYPE C

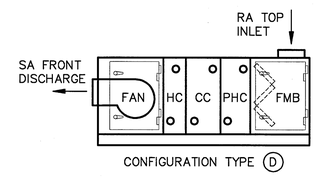

CONFIGURATION TYPE D

THIS DRAWING CREATED ON AUTOCAD 2011 AND WILL BE REVISED ONLY ON AUTOCAD 2011 SYSTEM. FILE: 79K39690-M-102.DWG

M-102

SYM	ZONE	DESCRIPTION	DATE	APPROVED
		REVISIONS		

JOHNSON, LEVINSON RAGAN, DAVILA, INC. CONSULTING ENGINEERS
1650 Centerpark Boulevard, Suite 350 West Palm Beach, Florida 33401 (561) 689-2303 • (561) 689-2302 Fax www.jldinc.com
Certification Number 6039

SIGNATURES		DATE
DRAWN	K. GOMEZ	6/13/13
CHECKED	T. FEAGANS	6/13/13
SUBMITTED: ARCH/ENG OF RECORD MICHAEL D. DAVILA		6/13/13
ST OF LICENSURE: FL		
LICENSE NO: 36066		
APPROVED: T. Feagans AE DEPT HEAD- T. FEAGANS		6/13/13
NASA SYS/LDE- S. MEHTA		6/13/13

NATIONAL AERONAUTICS AND SPACE ADMINISTRATION
JOHN F. KENNEDY SPACE CENTER, NASA
KENNEDY SPACE CENTER, FLORIDA

AIR HANDLERS UPGRADES
BOOSTER FABRICATION FACILITY, BFF

MECHANICAL SCHEDULES

FILE. NO.	SIZE	DWG. NO.	REV
	F	79K39690	
PROJ. NO. 98889.2a		SHEET 7	

KSC FORM 1-11 (3/76)(C/G 3/94)

NOTICE: When Government drawings, specifications, or other data are used for any purpose other than in connection with a definitely related Government procurement operation, the United States Government thereby incurs no responsibility nor obligation whatsoever; and the fact that the Government may have formulated, furnished, or in any way supplied the said drawings, specifications or other data is not to be regarded by implication or otherwise as in any manner licensing the holder or any other person or corporation, or conveying any rights or permission to manufacture, use, or sell any patented invention that may in any way be related thereto.

AIR HANDLING UNIT SCHEDULE

BLOWER UNIT														CHILLED WATER COOLING COIL														HOT WATER HEATING COIL										
PLAN MARK	MAKE	MODEL NUMBER	OUTDOOR AIR CFM	SUPPLY AIR CFM	STATIC PRESSURE INCHES OF WATER		BLOWER RPM	MOTOR					UNIT TYPE	FACE AREA FT^2	FACE VELOCITY FPM	AIR TEMP F				TOTAL CAPACITY MBH	SENSIBLE CAPACITY MBH	WATER TEMP F		GPM	WATER PRESSURE DROP FEET H_2O	NUMBER OF ROWS	FINS PER FOOT	AIR SIDE PRESSURE DROP INCHES H_2O	ROWS	FINS/ FOOT	FACE VEL.	MAX PD (IN)		GPM	TOTAL MBH	AIR DB		WATER TEMP		REMARKS
					EXTERNAL	TOTAL		HP	BHP	RPM	VOLTS	PH				ENTER		LEAVE				ENTER	LEAVE									AIR	WATER			ENTER	LEAVE	ENTER	LEAVE	
																DB	WB	DB	WB																					
AHU-18	TRANE	MCC-25	80	12400	1.20	2.79	1857	15	11.7	1750	460	3	SZ (C)	25.0	497	75.1	61.8	51.5	51.2	391	314	44	54	79	7	6	117	0.67	2	72	497	0.15	3.8	51	508	53.1	83.5	200	180	1 2 3 4 5 7 8 9 10 11 12 14 15
AHU-19	TRANE	MCC-17	740 / 1440	7390	2.40	3.93	2550	10	9.5	1750	460	3	SZ (B)	16.8	440	78.0	64.8	51.0	50.9	306	213	44	54	62	7	6	143	0.68	1	80	493	0.07	1.9	26	257	51.0	84.4	200	180	1 2 3 4 5 7 8 9 10 11 12 13 14 15
AHU-20	TRANE	MCC-40	1840	18360	2.75	3.98	1937	25	22.8	1750	460	3	SZ (A)	40.0	460	76.5	63.5	55.0	54.0	479	426	44	54	96	10	4	116	0.41	1	80	490	0.07	8.7	62	622	52.3	83.6	200	180	1 2 3 4 5 7 8 9 10 11 12 14 15
AHU-21	TRANE	MCC-08	155 / 3255	3255	2.90	4.36	2783	7.5	3.9	1750	460	3	SZ (D)	8.0	408	90.0	80.0	55.5	55.4	300	120	44	54	61	10	6	128	0.54	1 1	80 80	445 445	0.05 0.06	0.3 0.4	5.6 10.5	56 105	35.0 51.0	51.0 79.4	200	180	1 2 3 4 5 6 7 8 9 10 11 12 13 14 15
AHU-22	TRANE	MCC-04	180	1815	1.40	2.81	2733	3	1.6	1750	460	3	SZ (A)	4.5	402	76.5	64.5	54.4	53.7	59	43	44	54	12	3	6	81	0.42	1	101	454	0.07	6.5	8.7	87	44.6	89.0	200	180	1 2 3 4 5 7 8 9 10 11 12 14 15
AHU-23	TRANE	MCC-17	955	7755	1.65	3.22	2537	10	9.4	1750	460	3	SZ (B)	16.8	461	76.8	63.8	51.0	50.9	293	213	44	54	59	7	6	139	0.70	1	80	517	0.08	0.7	16.1	162	65.7	85.0	200	180	1 2 3 4 5 7 8 9 10 11 12 14 15
AHU-24	TRANE	MCC-10	505 / 1225	5045	2.75	4.53	2272	7.5	6.3	1750	460	3	SZ (A)	10.0	505	78.7	67.7	54.3	54.0	216	129	44	54	44	7	6	121	0.72	1	88	549	0.09	1.22	18.4	184	53.2	86.9	200	180	1 2 3 4 5 7 8 9 10 11 12 13 14 15
AHU-25	TRANE	MCC-50	780	23050	1.65	3.19	1619	25	23.8	1750	460	3	SZ (A)	49.0	470	75.5	62.3	51.4	51.1	726	583	44	54	146	6	8	84	0.71	1	80	490	0.07	7.2	25	250	73.6	83.6	200	180	1 2 3 4 5 7 8 9 10 11 12 14 15
AHU-26	TRANE	MCC-40	1840	18360	2.75	3.98	1937	25	22.8	1750	460	3	SZ (A)	40.0	460	76.5	63.5	55.0	54.0	479	426	44	54	96	10	4	116	0.41	1	80	490	0.07	8.7	62	622	52.3	83.6	200	180	1 2 3 4 5 7 8 9 10 11 12 14 15
AHU-27	TRANE	MCC-21	970 / 1770	9720	2.65	3.95	1503	15	9.6	1750	460	3	SZ (A)	20.8	467	77.7	65.8	56.0	55.3	328	228	44	54	66	6	4	144	0.44	1	80	490	0.07	2.7	34	335	52.5	84.4	200	180	1 2 3 4 5 7 8 9 10 11 12 13 14 15
AHU-30	TRANE	MCC-40	1840	18360	2.75	3.98	1937	25	22.8	1750	460	3	SZ (A)	40.0	460	76.5	63.5	55.0	54.0	479	426	44	54	96	10	4	116	0.41	1	80	490	0.07	8.7	62	622	52.3	83.6	200	180	1 2 3 4 5 7 8 9 10 11 12 14 15

1. DOUBLE WALL PRE-INSULATED CONSTRUCTION FOR ALL UNIT MODULES
2. HORIZONTAL DRAW THRU FOR ALL UNITS
3. TEFC PREMIUM EFFICIENCY FAN MOTOR
4. FILTER MIXING BOX SECTION WITH ACCESS DOOR AND 30% EFFICIENT 2" THICK FILTERS
5. COOLING COIL SECTION WITH SLOPED STAINLESS STEEL DRAIN PAN
6. AHU-21 CONTAINS A PRE-HEAT COIL UPSTREAM OF THE COOLING COIL, UPPER INFORMATION IS THE PRE-HEAT COIL AND LOWER INFORMATION IS THE REHEAT COIL
7. HOT WATER REHEAT COIL SECTION WITH SLOPED STAINLESS STEEL DRAIN PAN
8. FAN SECTION WITH AIRFOIL TYPE BLOWER AND ACCESS DOORS ON BOTH SIDES OF UNIT
9. SEE FLOOR PLAN FOR SUPPLY DUCT DISCHARGE CONFIGURATION AND FOR RETURN DUCT INLET CONFIGURATION
10. SEE FLOOR PLAN FOR LEFT HAND OR RIGHT HAND PIPING AND DRAIN CONNECTIONS
11. FAN MOTOR AND DRIVE SHALL BE INTERNALLY ISOLATED
12. PROVIDE DIFFERENTIAL PRESSURE GAUGE AND TUBING ACROSS ALL FILTER MODULES
13. TWO NUMBERS IN THE OUTDOOR AIR COLUMN INDICATED MINIMUM / MAXIMUM AIRFLOW RATES
14. THIS AHU SCHEDULE INFORMATION IS A LIKE-FOR-LIKE REPLACEMENT, ALL INFORMATION IS TAKEN FROM AS-BUILT DOCUMENTS
15. AHU COMPONENTS AND MODULE SECTIONS MUST FIT THRU AN EXISTING DOUBLE DOOR OPENING WHICH MEASURES 70" WIDE BY 83" HIGH

HC = HEATING COIL
CC = COOLING COIL
PHC = PREHEAT COIL
FMB = ANGLED FILTER MIXING BOX
SA = SUPPLY AIR
RA = RETURN AIR

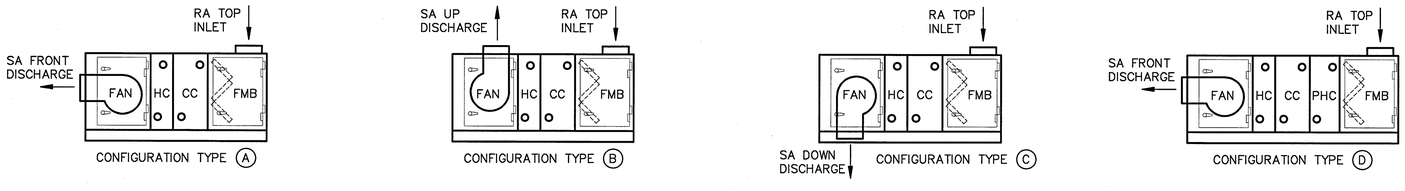

THIS DRAWING CREATED ON AUTOCAD 2011 AND WILL BE REVISED ONLY ON AUTOCAD 2011 SYSTEM. FILE: 79K39690-M-103.DWG

M-103

SYM	ZONE	DESCRIPTION	DATE	APPROVED

REVISIONS

JOHNSON, LEVINSON RAGAN, DAVILA, INC. CONSULTING ENGINEERS
1450 Centrepark Boulevard, Suite 350 West Palm Beach, Florida 33401 (561) 689-2303 • (561) 689-2302 Fax www.jldinc.com
Certification Number 6059

SIGNATURES		DATE
DRAWN	K. GOMEZ	6/13/13
CHECKED	T. FEAGANS	6/13/13
SUBMITTED: ARCH/ENG OF RECORD MICHAEL D. DAVILA		6/13/13
ST OF LICENSURE:	FL	
LICENSE NO:	36066	
APPROVED: AE DEPT HEAD- T. FEAGANS		6/13/13
NASA SYS/LDE- S. MEHTA		6/13/13

NATIONAL AERONAUTICS AND SPACE ADMINISTRATION
JOHN F. KENNEDY SPACE CENTER, NASA
KENNEDY SPACE CENTER, FLORIDA

AIR HANDLERS UPGRADES
BOOSTER FABRICATION FACILITY, BFF

MECHANICAL SCHEDULES

FILE. NO.	SIZE	DWG. NO.	REV
	F	79K39690	
PROJ. NO. 98889.2a		SHEET 8	

KSC FORM 1-11 (3/76)(C/G 3/94)

NOTICE: When Government drawings, specifications, or other data are used for any purpose other than in connection with a definitely related Government procurement operation, the United States Government thereby incurs no responsibility nor obligation whatsoever; and the fact that the Government may have formulated, furnished, or in any way supplied the said drawings, specifications or other data is not to be regarded by implication or otherwise as in any manner licensing the holder or any other person or corporation, or conveying any rights or permission to manufacture, use, or sell any patented invention that may in any way be related thereto.

AIR HANDLING UNIT SCHEDULE

BLOWER UNIT														CHILLED WATER COOLING COIL															HOT WATER HEATING COIL										
PLAN MARK	MAKE	MODEL NUMBER	OUTDOOR AIR CFM	SUPPLY AIR CFM	STATIC PRESSURE INCHES OF WATER		BLOWER RPM	MOTOR					UNIT TYPE	FACE AREA	FACE VELOCITY	AIR TEMP F				TOTAL CAPACITY MBH	SENSIBLE CAPACITY MBH	WATER TEMP F		GPM	WATER PRESSURE DROP	NUMBER OF ROWS	FINS PER INCH	AIR SIDE PRESSURE DROP	ROWS	FINS/ INCH	FACE VEL.	MAX PD (IN)		GPM	TOTAL MBH	AIR DB		WATER TEMP		REMARKS
					EXTERNAL	TOTAL		HP	BHP	RPM	VOLTS	PH		FT^2	FPM	ENTER DB	ENTER WB	LEAVE DB	LEAVE WB			ENTER	LEAVE		FEET H_2O			INCHES H_2O				AIR	WATER			ENTER	LEAVE	ENTER	LEAVE	
AHU-18	YORK	SOLUTION 51x96	80	12400	1.20	2.40	1755	15	9.5	1750	460	3	SZ (C)	24.8	500	75.1	61.8	50.9	50.5	391	314	44	54	79	3	8	10	0.65	2	8	500	0.12	11.2	51	508	53.1	83.5	200	165	1 2 3 4 5 7 8 9 10 11 12 14 15
AHU-19	YORK	SOLUTION 42x78	740 / 1440	7390	2.40	3.61	2556	10	8.9	1750	460	3	SZ (B)	14.9	496	78.0	64.8	50.6	50.1	306	213	44	54	62	13	8	9	0.67	2	8	496	0.12	14.4	26	257	51.0	84.4	200	165	1 2 3 4 5 7 8 9 10 11 12 13 14 15
AHU-20	YORK	SOLUTION 63x117	1840	18360	2.75	3.86	1490	25	17.5	1750	460	3	SZ (A)	38.3	479	76.5	63.5	53.2	52.5	479	426	44	54	96	4	8	8	0.52	2	8	479	0.11	12.0	62	622	52.3	83.6	200	165	1 2 3 4 5 7 8 9 10 11 12 14 15
AHU-21	YORK	SOLUTION 36x48	155 / 3255	3255	2.90	3.94	2758	7.5	3.3	1750	460	3	SZ (D)	6.9	472	90.0	80.0	54.4	54.1	300	120	44	54	61	11	8	8	0.61	1 2	8 8	472 472	0.10 0.11	2.0 2.3	5.6 10.5	56 105	35.0 51.0	51.0 79.4	200	165	1 2 3 4 5 6 7 8 9 10 11 12 13 14 15
AHU-22	YORK	SOLUTION 36x36	180	1815	1.40	2.10	1875	3	1.0	1750	460	3	SZ (A)	4.6	395	76.5	64.5	54.0	53.2	59	43	44	54	12	2	8	8	0.39	2	8	395	0.08	1.2	8.7	87	44.6	89.0	200	165	1 2 3 4 5 7 8 9 10 11 12 14 15
AHU-23	YORK	SOLUTION 42x81	955	7755	1.65	2.80	2509	10	8.5	1750	460	3	SZ (B)	15.6	497	76.8	63.8	51.4	50.9	293	213	44	54	59	12	8	8	0.60	2	8	497	0.12	5.8	16.1	162	65.7	85.0	200	165	1 2 3 4 5 7 8 9 10 11 12 14 15
AHU-24	YORK	SOLUTION 36x66	505 / 1225	5045	2.75	3.85	3311	7.5	6.2	1750	460	3	SZ (A)	10.3	490	78.7	67.7	52.3	52.0	216	129	44	54	44	8	8	8	0.64	2	8	490	0.11	8.5	18.4	184	53.2	86.9	200	165	1 2 3 4 5 7 8 9 10 11 12 13 14 15
AHU-25	YORK	SOLUTION 72x126	780	23050	1.65	2.68	1574	25	20.8	1750	460	3	SZ (A)	47.5	485	75.5	62.3	51.4	50.7	726	583	44	54	146	8	8	8	0.53	2	8	485	0.11	5.5	25	250	73.6	83.6	200	165	1 2 3 4 5 7 8 9 10 11 12 14 15
AHU-26	YORK	SOLUTION 63x117	1840	18360	2.75	3.86	1490	25	17.5	1750	460	3	SZ (A)	38.3	479	76.5	63.5	53.2	52.5	479	426	44	54	96	4	8	8	0.52	2	8	479	0.11	12.0	62	622	52.3	83.6	200	165	1 2 3 4 5 7 8 9 10 11 12 14 15
AHU-27	YORK	SOLUTION 48x87	970 / 1770	9720	2.65	3.87	2243	15	11.1	1750	460	3	SZ (A)	19.5	498	77.7	65.8	54.2	53.7	328	228	44	54	66	3	8	8	0.59	2	8	498	0.12	18.3	34	335	52.5	84.4	200	165	1 2 3 4 5 7 8 9 10 11 12 13 14 15
AHU-30	YORK	SOLUTION 63x117	1840	18360	2.75	3.86	1490	25	17.5	1750	460	3	SZ (A)	38.3	479	76.5	63.5	53.2	52.5	479	426	44	54	96	4	8	8	0.52	2	8	479	0.11	12.0	62	622	52.3	83.6	200	165	1 2 3 4 5 7 8 9 10 11 12 14 15

1. DOUBLE WALL PRE-INSULATED CONSTRUCTION FOR ALL UNIT MODULES
2. HORIZONTAL DRAW THRU FOR ALL UNITS
3. TEFC PREMIUM EFFICIENCY FAN MOTOR
4. FILTER MIXING BOX SECTION WITH ACCESS DOOR AND 30% EFFICIENT 2" THICK FILTERS
5. COOLING COIL SECTION WITH SLOPED STAINLESS STEEL DRAIN PAN
6. AHU-21 CONTAINS A PRE-HEAT COIL UPSTREAM OF THE COOLING COIL, UPPER INFORMATION IS THE PRE-HEAT COIL AND LOWER INFORMATION IS THE REHEAT COIL
7. HOT WATER REHEAT COIL SECTION WITH SLOPED STAINLESS STEEL DRAIN PAN
8. FAN SECTION WITH AIRFOIL TYPE BLOWER AND ACCESS DOORS ON BOTH SIDES OF UNIT
9. SEE FLOOR PLAN FOR SUPPLY DUCT DISCHARGE CONFIGURATION AND FOR RETURN DUCT INLET CONFIGURATION
10. SEE FLOOR PLAN FOR LEFT HAND OR RIGHT HAND PIPING AND DRAIN CONNECTIONS
11. FAN MOTOR AND DRIVE SHALL BE INTERNALLY ISOLATED
12. PROVIDE DIFFERENTIAL PRESSURE GAUGE AND TUBING ACROSS ALL FILTER MODULES
13. TWO NUMBERS IN THE OUTDOOR AIR COLUMN INDICATED MINIMUM / MAXIMUM AIRFLOW RATES
14. THIS AHU SCHEDULE INFORMATION IS A LIKE-FOR-LIKE REPLACEMENT, ALL INFORMATION IS TAKEN FROM AS-BUILT DOCUMENTS
15. AHU COMPONENTS AND MODULE SECTIONS MUST FIT THRU AN EXISTING DOUBLE DOOR OPENING WHICH MEASURES 70" WIDE BY 83" HIGH

HC = HEATING COIL
CC = COOLING COIL
PHC = PREHEAT COIL
FMB = ANGLED FILTER MIXING BOX
SA = SUPPLY AIR
RA = RETURN AIR

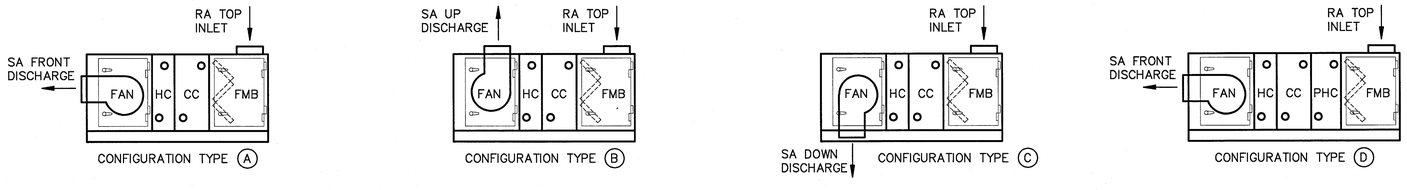

SYM	ZONE	DESCRIPTION	DATE	APPROVED
		REVISIONS		

JOHNSON, LEVINSON RAGAN, DAVILA, INC. CONSULTING ENGINEERS
1450 Centerpark Boulevard, Suite 350 West Palm Beach, Florida 33401 (561) 689-2303 • (561) 689-2302 Fax www.jldlinc.com
Certification Number 6099

SIGNATURES		DATE
DRAWN	K. GOMEZ	6/13/13
CHECKED	T. FEAGANS	6/13/13
SUBMITTED: ARCH/ENG OF RECORD	MICHAEL D. DAVILA	6/13/13
ST OF LICENSURE: FL		
LICENSE NO: 36066		
APPROVED: AE DEPT HEAD- T. FEAGANS		6/13/13
NASA SYS/LDE- S. MEHTA		6/17/13

NATIONAL AERONAUTICS AND SPACE ADMINISTRATION
JOHN F. KENNEDY SPACE CENTER, NASA
KENNEDY SPACE CENTER, FLORIDA

AIR HANDLERS UPGRADES
BOOSTER FABRICATION FACILITY, BFF

MECHANICAL SCHEDULES

FILE. NO.	SIZE	DWG. NO.	REV
	F	79K39690	
PROJ. NO. 98889.2a		SHEET 9	

THIS DRAWING CREATED ON AUTOCAD 2011 AND WILL BE REVISED ONLY ON AUTOCAD 2011 SYSTEM. FILE: 79K39690- M-104.DWG

M-104

KSC FORM 1-11 (3/76)(C/G 3/94)

NOTICE: When Government drawings, specifications, or other data are used for any purpose other than in connection with a definitely related Government procurement operation, the United States Government thereby incurs no responsibility nor obligation whatsoever; and the fact that the Government may have formulated, furnished, or in any way supplied the said drawings, specifications or other data is not to be regarded by implication or otherwise as in any manner licensing the holder or any other person or corporation, or conveying any rights or permission to manufacture, use, or sell any patented invention that may in any way be related thereto.

CONTROL VALVE SCHEDULE

PLAN MARK	VALVE TYPE	VALVE SIZE	GPM	SERVES	ACTUATOR TYPE	MIN CLOSE OFF PSIG	REMARKS
CV-18 A	PRESSURE INDEPENDENT, ADJUSTABLE	2 1/2"	79	AHU-18 CHW COIL	ELECTRIC	60	1 4 5 7 8
CV-18 B	PRESSURE INDEPENDENT, ADJUSTABLE	2"	51	AHU-18 HW COIL	ELECTRIC	60	2 4 5 6 8
CV-19 A	PRESSURE INDEPENDENT, ADJUSTABLE	2 1/2"	62	AHU-19 CHW COIL	ELECTRIC	60	1 4 5 7 8
CV-19 B	PRESSURE INDEPENDENT, ADJUSTABLE	1 1/2"	26	AHU-19 HW COIL	ELECTRIC	60	2 4 5 6 8
CV-20 A	PRESSURE INDEPENDENT, ADJUSTABLE	3"	96	AHU-20 CHW COIL	ELECTRIC	60	1 4 5 7 8
CV-20 B	PRESSURE INDEPENDENT, ADJUSTABLE	2 1/2"	62	AHU-20 HW COIL	ELECTRIC	60	2 4 5 6 8
CV-21 A	PRESSURE INDEPENDENT, ADJUSTABLE	2 1/2"	61	AHU-21 CHW COIL	ELECTRIC	60	1 4 5 7 8
CV-21 B	PRESSURE INDEPENDENT, ADJUSTABLE	1"	10.5	AHU-21 HW COIL	ELECTRIC	60	2 4 5 6 8
CV-21 C	PRESSURE INDEPENDENT, ADJUSTABLE	3/4"	5.6	AHU-21 PHW COIL	ELECTRIC	60	2 4 5 6 8
CV-22 A	PRESSURE INDEPENDENT, ADJUSTABLE	1 1/4"	12	AHU-22 CHW COIL	ELECTRIC	60	1 4 5 7 8
CV-22 B	PRESSURE INDEPENDENT, ADJUSTABLE	1"	8.7	AHU-22 HW COIL	ELECTRIC	60	2 4 5 6 8
CV-23 A	PRESSURE INDEPENDENT, ADJUSTABLE	2 1/2"	59	AHU-23 CHW COIL	ELECTRIC	60	1 4 5 7 8
CV-23 B	PRESSURE INDEPENDENT, ADJUSTABLE	1 1/4"	16.1	AHU-23 HW COIL	ELECTRIC	60	2 4 5 6 8
CV-24 A	PRESSURE INDEPENDENT, ADJUSTABLE	2"	44	AHU-24 CHW COIL	ELECTRIC	60	1 4 5 7 8
CV-24 B	PRESSURE INDEPENDENT, ADJUSTABLE	1 1/2"	18.4	AHU-24 HW COIL	ELECTRIC	60	2 4 5 6 8
CV-25 A	PRESSURE INDEPENDENT, ADJUSTABLE	4"	146	AHU-25 CHW COIL	ELECTRIC	60	1 4 5 7 8
CV-25 B	PRESSURE INDEPENDENT, ADJUSTABLE	1 1/2"	25	AHU-25 HW COIL	ELECTRIC	60	2 4 5 6 8
CV-26 A	PRESSURE INDEPENDENT, ADJUSTABLE	3"	96	AHU-26 CHW COIL	ELECTRIC	60	1 4 5 7 8
CV-26 B	PRESSURE INDEPENDENT, ADJUSTABLE	2 1/2"	62	AHU-26 HW COIL	ELECTRIC	60	2 4 5 6 8
CV-27 A	PRESSURE INDEPENDENT, ADJUSTABLE	2 1/2"	66	AHU-27 CHW COIL	ELECTRIC	60	1 4 5 7 8
CV-27 B	PRESSURE INDEPENDENT, ADJUSTABLE	2"	34	AHU-27 HW COIL	ELECTRIC	60	2 4 5 6 8
CV-30 A	PRESSURE INDEPENDENT, ADJUSTABLE	3"	96	AHU-30 CHW COIL	ELECTRIC	60	1 4 5 7 8
CV-30 B	PRESSURE INDEPENDENT, ADJUSTABLE	2 1/2"	62	AHU-30 HW COIL	ELECTRIC	60	2 4 5 6 8

1. CHILLED WATER COIL VALVE
2. REHEAT COIL CONTROL VALVE
3. TWO WAY
4. MODULATING
5. BASIS OF DESIGN IS DANFOSS, AB-QM SERIES, STAINLESS STEEL TRIM
6. HW CONTROL VALVE SHALL FAIL CLOSED
7. CHW CONTROL VALVE SHALL FAIL IN THEIR LAST POSITION
8. GPM COIL FLOWS ARE TAKEN FROM AS-BUILT DOCUMENTS AND MATCH COIL FLOWS OF ASSOCIATED AIR HANDLING UNITS. IF NEW AHU'S ARE SELECTED USING DIFFERENT COIL FLOWS THAN INDICATED, THESE CONTROL VALVES MUST BE RESELECTED TO MATCH THOSE FLOW RATES

THIS DRAWING CREATED ON AUTOCAD 2011 AND WILL BE REVISED ONLY ON AUTOCAD 2011 SYSTEM. FILE: 79K39690- M-105 .DWG

M-105

SYM	ZONE	DESCRIPTION	DATE	APPROVED

REVISIONS

JOHNSON, LEVINSON RAGAN, DAVILA, INC. CONSULTING ENGINEERS
1450 Centerpark Boulevard, Suite 350 West Palm Beach, Florida 33401 (561) 689-2303 (561) 689-2302 Fax www.jldac.com
Certification Number 6059

SIGNATURES		DATE
DRAWN	K. GOMEZ	6/13/13
CHECKED	T. FEAGANS	6/13/13
SUBMITTED: ARCH/ENG OF RECORD MICHAEL D. DAVILA		6/13/13
ST OF LICENSURE: FL LICENSE NO: 36066		
APPROVED: T. Feagans AE DEPT HEAD- T. FEAGANS		6/13/13
NASA SYS/LDE- S. MEHTA		6/17/13

NATIONAL AERONAUTICS AND SPACE ADMINISTRATION
JOHN F. KENNEDY SPACE CENTER, NASA
KENNEDY SPACE CENTER, FLORIDA

AIR HANDLERS UPGRADES
BOOSTER FABRICATION FACILITY, BFF

MECHANICAL SCHEDULES

FILE. NO.	SIZE	DWG. NO.	REV
	F	79K39690	

PROJ. NO. 98889.2a SHEET 10

NOTICE: When Government drawings, specifications, or other data are used for any purpose other than in connection with a definitely related Government procurement operation, the United States Government thereby incurs no responsibility nor obligation whatsoever; and the fact that the Government may have formulated, furnished, or in any way supplied the said drawings, specifications or other data is not to be regarded by implication or otherwise as in any manner licensing the holder or any other person or corporation, or conveying any rights or permission to manufacture, use, or sell any patented invention that may in any way be related thereto.

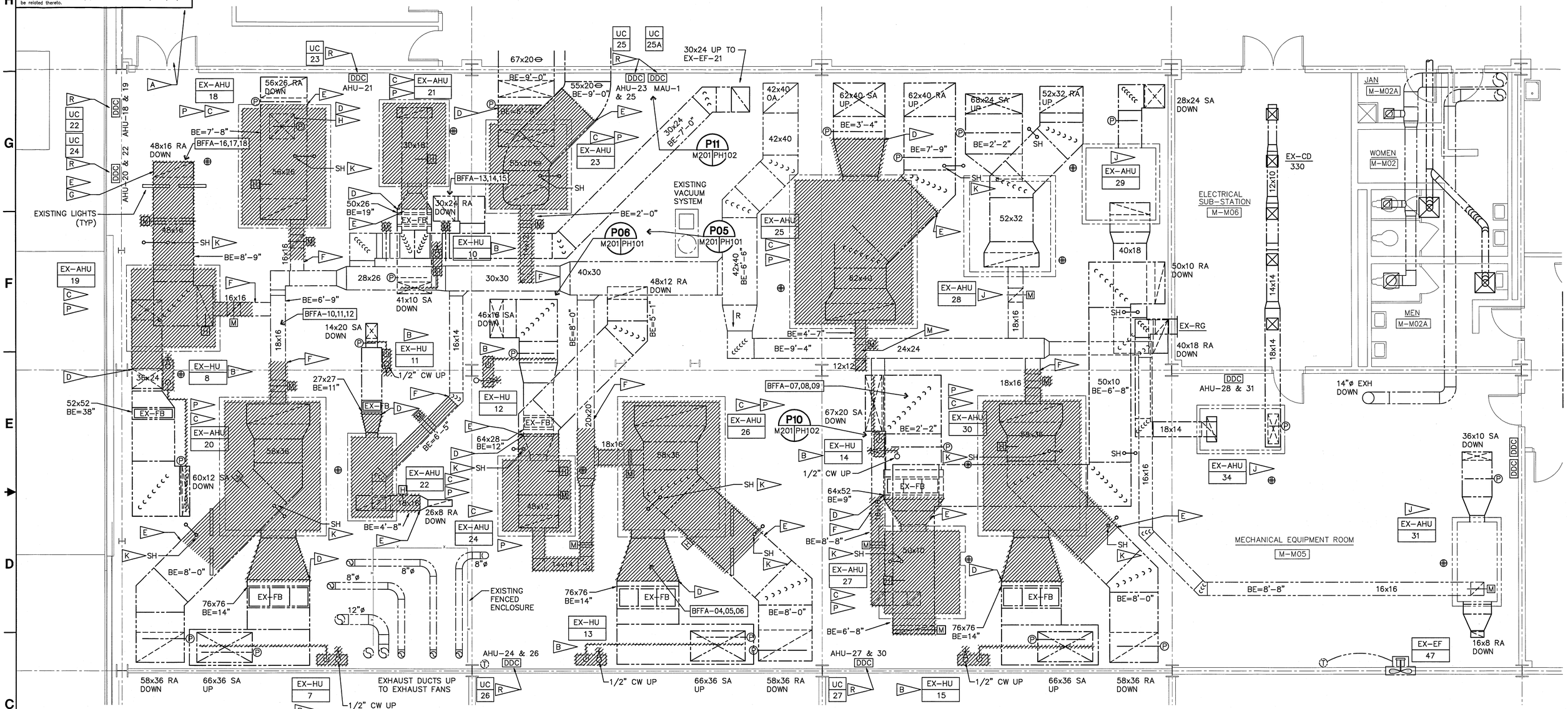

MEZZANINE LEVEL AHU HVAC PLAN - DEMOLITION

SCALE: 1/4"=1'-0"

N

SPECIFIC NOTES:

A — THE REMOVAL OF ALL DEMOLISHED ITEMS SHALL BE THRU THIS DOUBLE DOOR WHICH HAS A FREE OPENING AREA OF APPROXIMATELY 70" WIDE BY 83" HIGH. DEMOLISHED ITEMS SHALL BE DISASSEMBLED SUFFICIENTLY TO FIT THRU THIS AVAILABLE OPENING AND THE AVAILABLE PATHWAY TO GET TO THIS DOORWAY

B — REMOVE HUMIDIFIER AND SUPPORT POST. REMOVE SUPPLY PIPE FROM HUMIDIFIER TO ITS TERMINATION POINT INSIDE OF THE SUPPLY DUCT. PATCH REMAINING DUCT OPENING WITH SHEET METAL AND SEAL WITH MASTIC. PATCH DUCT INSULATION. REMOVE 1/2" COPPER COLD WATER LINE SERVING HUMIDIFIER UP TO A POINT APPROXIMATELY 8'-0" ABOVE FLOOR AND CAP REMAINING BRANCH.

C — REMOVE AIR HANDLING UNIT. UNIT SHALL BE DISASSEMBLED AND REMOVED IN MODULES OR SECTIONS TO FIT THRU AVAILABLE OPENING.

D — REMOVE SUPPLY DUCT FROM THIS POINT BACK TO THE AIR HANDLER CONNECTION. DUCTWORK BEYOND TO REMAIN AND BE RECONNECTED TO NEW UNIT.

E — REMOVE RETURN DUCT FROM THIS POINT BACK TO THE AIR HANDLER CONNECTION. DUCTWORK BEYOND TO REMAIN AND BE RECONNECTED TO NEW UNIT.

F — REMOVE OUTDOOR AIR DUCT FROM THIS POINT BACK TO THE AIR HANDLER CONNECTION. DUCTWORK BEYOND TO REMAIN AND BE RECONNECTED TO NEW UNIT.

G — REMOVE THIS RETURN DUCT DOWN TO THE FLOOR ELEVATION, PROVIDE A TEMPORARY STEEL PLATE OVER THE FLOOR OPENING TO PROVIDE AN UNOBSTRUCTED PATHWAY TO REMOVE THE REMAINING EXISTING UNITS AND TRANSFER NEW UNITS INSIDE.

H — REMOVE THIS SUPPLY DUCT DOWN TO THE FLOOR ELEVATION, PROVIDE A TEMPORARY STEEL PLATE OVER THE FLOOR OPENING TO PROVIDE AN UNOBSTRUCTED PATHWAY TO REMOVE THE REMAINING EXISTING UNITS AND TRANSFER NEW UNITS INSIDE.

J — THIS AIR HANDLER TO REMAIN UNDISTURBED

K — EXISTING UPRIGHT SPRINKLER HEAD BELOW DUCT TO REMAIN. PROTECT HEAD DURING CONSTRUCTION, SEE MF M201 M301

L. — ONCE A SECTION OF DUCT IS REMOVED, IMMEDIATELY PROTECT THE REMAINING DUCT OPENING USING PLASTIC SHEETING AND TAPE, SEALING ENTIRE OPENING PERIMETER FROM DUST INTRUSION.

M — REMOVE OUTDOOR AIR DUCT FOR THIS UNIT BACK TO THE OA MAIN DUCT AND CAP AND SEAL REMAINING DUCT OPENING. NEW OA DUCT TAP TO BE RELOCATED.

N. — EXISTING AHU CONCRETE PADS SHALL REMAIN AND BE REUSED.

P — REMOVE EXISTING CONTROL SENSORS, VALVES, DAMPERS AND PNEUMATIC ACTUATORS.

R — REMOVE I/P TRANSDUCER FOR CONTROL OF VALVES AND DAMPER ACTUATORS.

GRAPHIC SCALE
0' 2' 4' 8'
SCALE IN FEET
1/4" = 1'-0"

THIS DRAWING CREATED ON AUTOCAD 2011 AND WILL BE REVISED ONLY ON AUTOCAD 2011 SYSTEM. FILE: 79K39690- M-201.DWG

M-201

SYM	ZONE	DESCRIPTION	DATE	APPROVED
		REVISIONS		

JOHNSON, LEVINSON RAGAN, DAVILA, INC. CONSULTING ENGINEERS
1450 Centerpark Boulevard, Suite 350 West Palm Beach, Florida 33401 (561) 689-2303 (561) 689-2302 Fax www.jldinc.com
Certification Number 6059

SIGNATURES		DATE
DRAWN	K. GOMEZ	6/13/13
CHECKED	T. FEAGANS	6/13/13
SUBMITTED: ARCH/ENG. OF RECORD	MICHAEL D. DAVILA	6/13/13
ST OF LICENSURE:	FL	
LICENSE NO:	36066	
APPROVED: AE DEPT HEAD-	T. FEAGANS	6/13/13
NASA SYS/LDE-	S. MEHTA	6/13/13

NATIONAL AERONAUTICS AND SPACE ADMINISTRATION
JOHN F. KENNEDY SPACE CENTER, NASA
KENNEDY SPACE CENTER, FLORIDA

AIR HANDLERS UPGRADES
BOOSTER FABRICATION FACILITY, BFF

MEZZANINE LEVEL AHU HVAC PLAN - DEMOLITION

FILE. NO.	SIZE	DWG. NO.	REV
	F	79K39690	
PROJ. NO. 98889.2a		SHEET 11	

KSC FORM 1-11 (3/76)(C/G 3/94)

NOTICE: When Government drawings, specifications, or other data are used for any purpose other than in connection with a definitely related Government procurement operation, the United States Government thereby incurs no responsibility nor obligation whatsoever; and the fact that the Government may have formulated, furnished, or in any way supplied the said drawings, specifications or other data is not to be regarded by implication or otherwise as in any manner licensing the holder or any other person or corporation, or conveying any rights or permission to manufacture, use, or sell any patented invention that may in any way be related thereto.

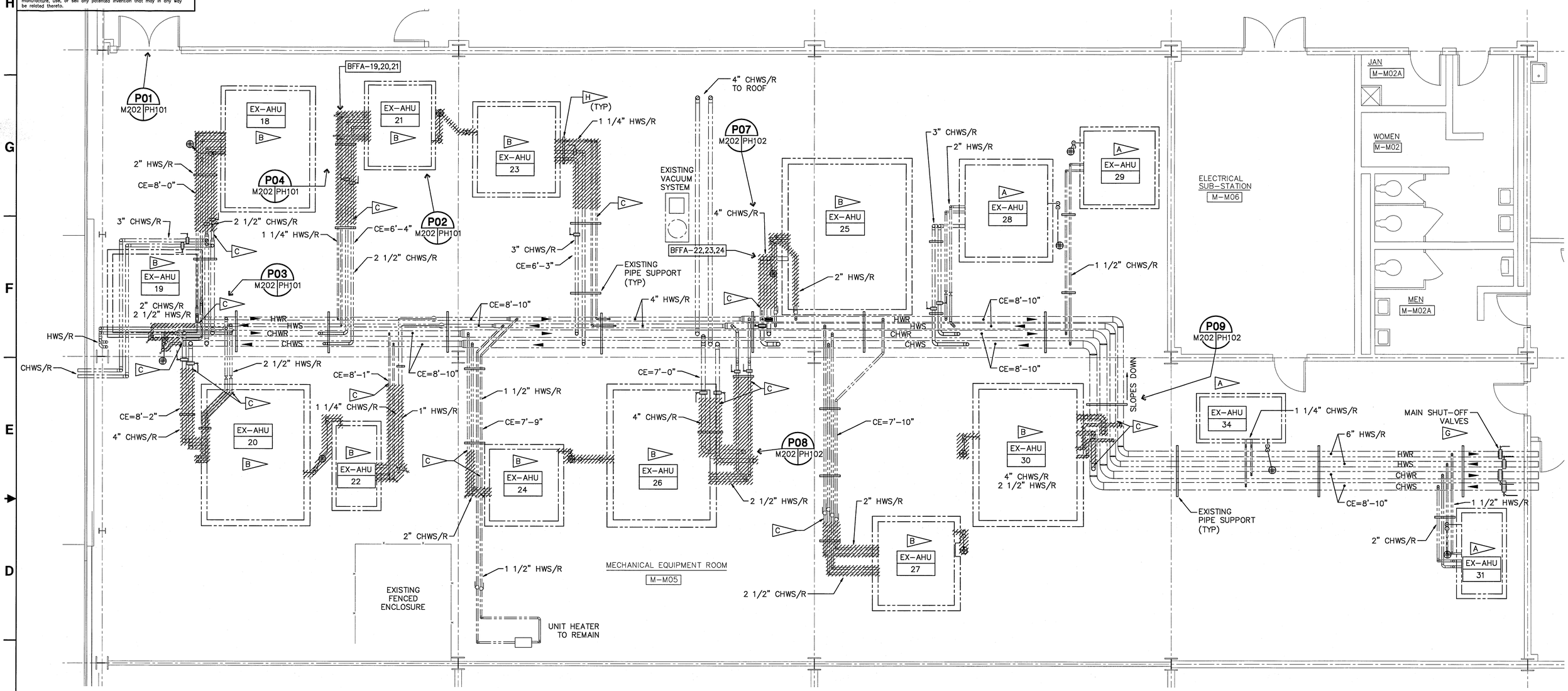

MEZZANINE LEVEL AHU PIPING PLAN - DEMOLITION

SCALE: 1/4"=1'-0"

N

SPECIFIC NOTES:

A. THIS AIR HANDLER TO REMAIN UNDISTURBED

B. THIS AIR HANDLER SHALL BE REMOVED. REMOVE CONDENSATE DRAIN LINE FROM AHU TO TERMINATION AT FLOOR DRAIN

C. REMOVE CHW PIPING AND HW PIPING AND PIPE INSULATION FROM THIS POINT TO CONNECTIONS TO THE AIR HANDLER

D. REMOVE ALL VALVES, STRAINERS, FLEX PIPE, AND PIPE ACCESSORIES IN UNIT COIL PIPING SHOWN AS HATCHED.

E. PIPING IS SHOWN TO BE DEMOLISHED FAR ENOUGH BACK TOWARDS THE MAIN PIPES TO ALLOW ADEQUATE TRANSFER SPACE TO MOVE EXISTING AIR HANDLERS OUT AND BRING NEW AIR HANDLERS IN. WHERE AN EXISTING SHUT-OFF VALVE IS SHOWN TO REMAIN, THE CONTRACTOR SHALL VERIFY THE VALVE IS ABLE TO SHUT-OFF WATER TIGHT, OTHERWISE THE VALVE WILL BE REMOVED AND REPLACED.

F. AFTER EACH PHASE SHUT-DOWN AND PIPING SYSTEM DRAIN, REMOVE THE BRANCH PIPING IN THAT PHASE AND INSTALL NEW SHUT-OFF VALVES ON THE BRANCH LINES. FILL THE PIPING SYSTEMS AND RE-ENERGIZE THE REMAINING AIR HANDLERS NOT IN THE PHASE TO MINIMIZE UNIT DOWNTIMES.

G. THESE MAIN SHUT-OFF VALVES SHALL BE USED TO ISOLATE THIS MECHANICAL ROOM.

H. REMOVE EXISTING PIPE SUPPORTS WHERE PIPING IS ALSO BEING REMOVED, TO ALLOW SUFFICIENT CLEARANCE TO TRANSFER AIR HANDLERS IN AND OUT.

GRAPHIC SCALE
0' 2' 4' 8'
SCALE IN FEET
1/4" = 1'-0"

THIS DRAWING CREATED ON AUTOCAD 2011 AND WILL BE REVISED ONLY ON AUTOCAD 2011 SYSTEM. FILE: 79K39690- M-202 .DWG

M-202

SYM	ZONE	DESCRIPTION	DATE	APPROVED
		REVISIONS		

JOHNSON, LEVINSON RAGAN, DAVILA, INC. CONSULTING ENGINEERS
1450 Centrepark Boulevard, Suite 350 West Palm Beach, Florida 33401 (561) 689.2303 • (561) 689.2302 Fax www.jldinc.com
Certification Number 6099

SIGNATURES		DATE
DRAWN	K. GOMEZ	6/13/13
CHECKED	T. FEAGANS	6/13/13
SUBMITTED: ARCH/ENG OF RECORD MICHAEL D. DAVILA		6/13/13
ST OF LICENSURE: FL LICENSE NO: 36066		
APPROVED: AE DEPT HEAD- T. FEAGANS		6/13/13
NASA SYS/LDE- S. MEHTA		6/13/13

NATIONAL AERONAUTICS AND SPACE ADMINISTRATION
JOHN F. KENNEDY SPACE CENTER, NASA
KENNEDY SPACE CENTER, FLORIDA

AIR HANDLERS UPGRADES
BOOSTER FABRICATION FACILITY, BFF

MEZZANINE LEVEL AHU PIPING PLAN - DEMOLITION

FILE. NO.	SIZE	DWG. NO.	REV
	F	79K39690	
PROJ. NO. 98889.2a		SHEET 12	

KSC FORM 1-11 (3/76)(C/G 3/94)

NOTICE: When Government drawings, specifications, or other data are used for any purpose other than in connection with a definitely related Government procurement operation, the United States Government thereby incurs no responsibility nor obligation whatsoever; and the fact that the Government may have formulated, furnished, or in any way supplied the said drawings, specifications or other data is not to be regarded by implication or otherwise as in any manner licensing the holder or any other person or corporation, or conveying any rights or permission to manufacture, use, or sell any patented invention that may in any way be related thereto.

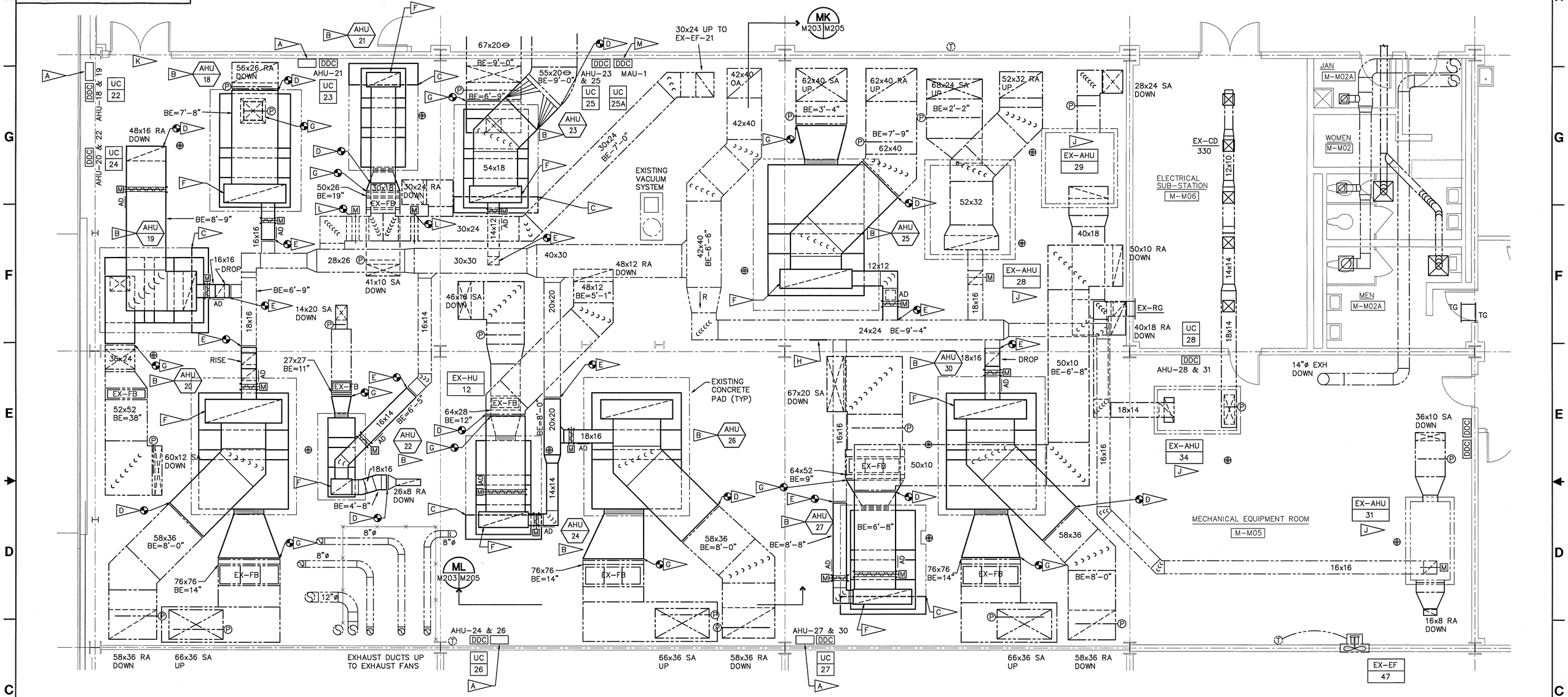

MEZZANINE LEVEL AHU HVAC PLAN - NEW WORK

SCALE: 1/4"=1'-0"

N

SPECIFIC NOTES:

A — INSTALL NEW I/O EXPANSION MODULE IN NEW ENCLOSURE, SEE M-600 SERIES SHEETS, AND SEE MM (M203 | M606)

B — INSTALL NEW AIR HANDLING UNITS ON EXISTING CONCRETE PAD. PROVIDE NEOPRENE VIBRATION ISOLATORS, SEE MG (M203 | M302)

C — PROVIDE NEW CONCRETE PAD EXTENSION OF EXISTING PAD TO EXTEND 6" BEYOND FOOTPRINT OF NEW AIR HANDLING UNIT, SEE MJ (M203 | M302)

D — CONNECT NEW RETURN AIR DUCT TO EXISTING AT THIS LOCATION. ROUTE TO NEW AHU INLET.

E — CONNECT NEW OUTDOOR AIR DUCT TO EXISTING AT THIS LOCATION. ROUTE TO TAP INTO AIR PLENUM AT AHU INLET. PROVIDE NEW MOTORIZED DAMPER IN OA DUCT. ROUTE NEW OA DUCTS AS HIGH AS POSSIBLE.

F — PROVIDE NEW FULL SIZE RETURN AIR PLENUM ON AHU INLET, CONNECT TO UNIT USING FLEXIBLE DUCT CONNECTOR. TAP RA AND OA DUCT INTO PLENUM.

G — CONNECT NEW SUPPLY AIR DUCT TO EXISTING AT THIS LOCATION. ROUTE TO NEW AHU DISCHARGE OPENING, TRANSITION FROM EXISTING DUCT SIZE TO AHU OUTLET SIZE, CONNECT TO AHU USING FLEXIBLE DUCT CONNECTOR.

H — PROVIDE INSULATION SHEET METAL CAP ON EXISTING REMAINING OA DUCT OPENING.

J — THIS AIR HANDLER TO REMAIN UNDISTURBED.

K — ALL NEW AIR HANDLING UNITS MUST BE TRASNPORTED INTO THE SPACE IN MODULAR PIECES TO FIT THRU THIS EXISTING DOUBLE DOOR CLEAR OPENING OF 70" WIDE BY 83" HIGH. WHERE AN INDIVIDUAL MODULAR SECTION IS STILL TOO LARGE, THE MODULE MAY REQUIRE DISASSEMBLY. ONCE MODULES ARE IN PLACE, ASSEMLBY IS REQUIRED.

L — INSTALL NEW ACTUATOR ON EXISTING DAMPER

M — INSTALL NEW I/O EXPANSION MODULE IN EXISTING UC-25A ENCLOSURE, EXTEND 24VAC POWER FROM UC-25 PANEL IN NEW CONDUIT BETWEEN PANELS

GRAPHIC SCALE
0' 2' 4' 8'
SCALE IN FEET
1/4" = 1'-0"

THIS DRAWING CREATED ON AUTOCAD 2011 AND WILL BE REVISED ONLY ON AUTOCAD 2011 SYSTEM. FILE: 79K39690- M-203.DWG

M-203

SYM	ZONE	DESCRIPTION	DATE	APPROVED
		REVISIONS		

JOHNSON, LEVINSON RAGAN, DAVILA, INC. CONSULTING ENGINEERS
1450 Centrepark Boulevard, Suite 350 West Palm Beach, Florida 33401 (561) 689-2303 • (561) 689-2302 Fax www.jldinc.com
Certificate Number 6059

SIGNATURES		DATE
DRAWN	K. GOMEZ	6/13/13
CHECKED	T. FEAGANS	6/13/13
SUBMITTED: ARCH/ENG-OF-RECORD MICHAEL D. DAVILA		6/13/13
ST OF LICENSURE:	FL	
LICENSE NO:	36066	
APPROVED: AE DEPT HEAD- T. FEAGANS		6/13/13
NASA SYS/LDE- S. MEHTA		6/17/13

NATIONAL AERONAUTICS AND SPACE ADMINISTRATION
JOHN F. KENNEDY SPACE CENTER, NASA
KENNEDY SPACE CENTER, FLORIDA

AIR HANDLERS UPGRADES
BOOSTER FABRICATION FACILITY, BFF

MEZZANINE LEVEL AHU HVAC PLAN - NEW WORK

FILE. NO.	SIZE	DWG. NO.	REV
	F	79K39690	
PROJ. NO. 98889.2a		SHEET 13	

KSC FORM 1-11 (3/76)(C/G 3/94)

NOTICE: When Government drawings, specifications, or other data are used for any purpose other than in connection with a definitely related Government procurement operation, the United States Government thereby incurs no responsibility nor obligation whatsoever; and the fact that the Government may have formulated, furnished, or in any way supplied the said drawings, specifications or other data is not to be regarded by implication or otherwise as in any manner licensing the holder or any other person or corporation, or conveying any rights or permission to manufacture, use, or sell any patented invention that may in any way be related thereto.

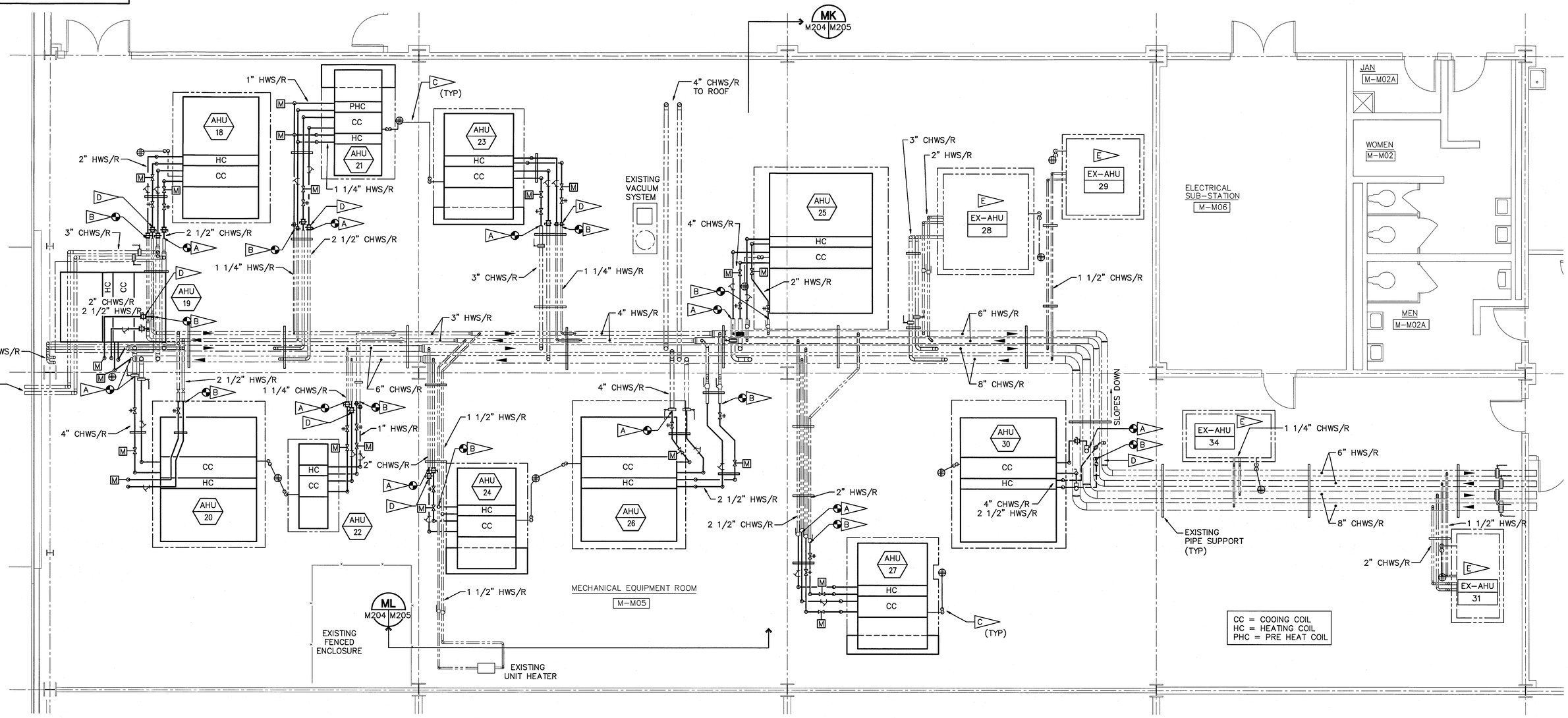

MEZZANINE LEVEL AHU PIPING PLAN - DEMOLITION

SCALE: 1/4"=1'-0"

N

SPECIFIC NOTES:

A. CONNECT NEW CHW PIPING TO EXISTING BRANCH AT THIS LOCATION, EXTEND TO CONNECT TO NEW AHU COOLING COIL, SEE ME M204 M301

B. CONNECT NEW HW PIPING TO EXISTING BRANCH AT THIS LOCATION, EXTEND TO CONNECT TO NEW AHU HEATING COIL, SEE ME M204 M301

C. PROVIDE CONDENSATE P-TRAP FOR AHU COOLING COIL AND EXTEND TO TERMINATE WITH ELBOW DOWN OVER EXISTING FLOOR DRAIN, SEE MG M204 M302

D. PROVIDE NEW SHUT OFF VALVES AT EXISTING PIPE ENDS WHERE EXISTING VALVES FARTHER DOWN STREAM WERE REMOVED.

E. THIS AIR HANDLING UNIT TO REMAIN UNDISTURBED.

F. WHERE EXISTING PIPE SUPPORT WAS REMOVED WITH THE EXISTING BRANCH PIPING, THE CONTRACTOR MAY REINSTALL THE EXISTING HANGER OR PROVIDE NEW HANGERS, SEE MH M204 M302

GRAPHIC SCALE
0' 2' 4' 8'
SCALE IN FEET
1/4" = 1'-0"

THIS DRAWING CREATED ON AUTOCAD 2011 AND WILL BE REVISED ONLY ON AUTOCAD 2011 SYSTEM. FILE: 79K39690- M-204 .DWG

SYM	ZONE	DESCRIPTION	DATE	APPROVED
		REVISIONS		

JOHNSON, LEVINSON RAGAN, DAVILA, INC. CONSULTING ENGINEERS
1450 Centrepark Boulevard, Suite 350 West Palm Beach, Florida 33401 (561) 689-2303 • (561) 689-2302 Fax www.jldinc.com
Certification Number 6059

SIGNATURES		DATE
DRAWN	K. GOMEZ	6/13/13
CHECKED	T. FEAGANS	6/13/13
SUBMITTED: ARCH/ENG OF RECORD	MICHAEL D. DAVILA	6/13/13
ST OF LICENSURE:	FL	
LICENSE NO:	36066	
APPROVED: AE DEPT HEAD-	T. FEAGANS	6/13/13
NASA SYS/LDE-	S. MEHTA	6/17/13

NATIONAL AERONAUTICS AND SPACE ADMINISTRATION
JOHN F. KENNEDY SPACE CENTER, NASA
KENNEDY SPACE CENTER, FLORIDA

AIR HANDLERS UPGRADES
BOOSTER FABRICATION FACILITY, BFF

MEZZANINE LEVEL AHU PIPING PLAN - NEW WORK

FILE. NO.	SIZE	DWG. NO.	REV
	F	79K39690	
PROJ. NO. 98889.2a		SHEET 14	

M-204

KSC FORM 1-11 (3/76)(C/G 3/94)

NOTICE: When Government drawings, specifications, or other data are used for any purpose other than in connection with a definitely related Government procurement operation, the United States Government thereby incurs no responsibility nor obligation whatsoever; and the fact that the Government may have formulated, furnished, or in any way supplied the said drawings, specifications or other data is not to be regarded by implication or otherwise as in any manner licensing the holder or any other person or corporation, or conveying any rights or permission to manufacture, use, or sell any patented invention that may in any way be related thereto.

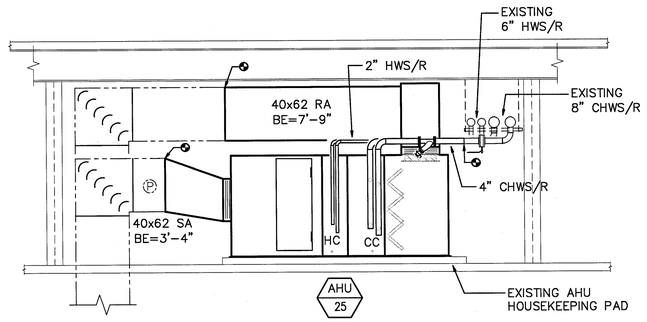

SECTION AT AHU-25
SCALE: 1/4"=1'-0"

MK
M203 M205
M204

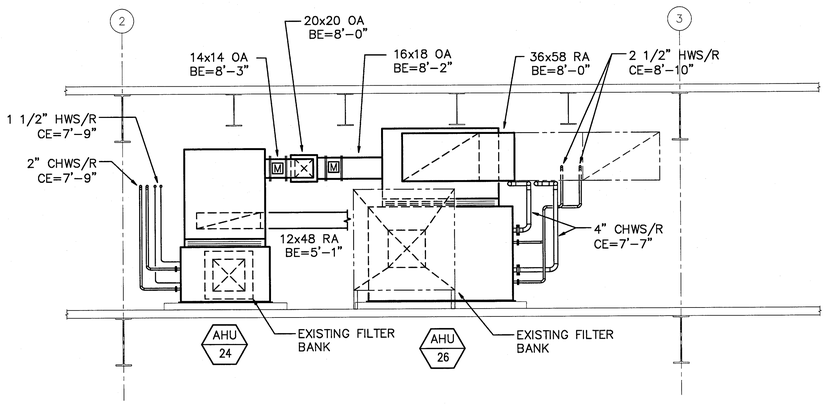

SECTION AT AHU-24 AND AHU-26
SCALE: 1/4"=1'-0"

ML
M203 M205
M204

GRAPHIC SCALE
0' 2' 4' 8'
SCALE IN FEET
1/4" = 1'-0"

THIS DRAWING CREATED ON AUTOCAD 2011 AND WILL BE REVISED ONLY ON AUTOCAD 2011 SYSTEM. FILE: 79K39690- M-205.DWG

M-205

SYM	ZONE	DESCRIPTION	DATE	APPROVED
		REVISIONS		

JOHNSON, LEVINSON RAGAN, DAVILA, INC. CONSULTING ENGINEERS
1450 Centerpark Boulevard, Suite 350 West Palm Beach, Florida 33401 (561) 689-2303 (561) 689-2302 Fax www.jldinc.com
Certification Number 6059

SIGNATURES		DATE
DRAWN	K. GOMEZ	6/13/13
CHECKED	T. FEAGANS	6/13/13
SUBMITTED: ARCH/ENG OF RECORD MICHAEL D. DAVILA		6/13/13
ST OF LICENSURE:	FL	
LICENSE NO:	36066	
APPROVED: T. Feagans AE DEPT HEAD- T. FEAGANS		6/13/13
NASA SYS/LDE- S. MEHTA		6/17/13

NATIONAL AERONAUTICS AND SPACE ADMINISTRATION
JOHN F. KENNEDY SPACE CENTER, NASA
KENNEDY SPACE CENTER, FLORIDA

AIR HANDLERS UPGRADES
BOOSTER FABRICATION FACILITY, BFF

AIR HANDLING UNIT SECTIONS

FILE. NO.	SIZE	DWG. NO.	REV
	F	79K39690	
PROJ. NO. 98889.2a		SHEET 15	

KSC FORM 1-11 (3/76)(C/G 3/94)

NOTICE: When Government drawings, specifications, or other data are used for any purpose other than in connection with a definitely related Government procurement operation, the United States Government thereby incurs no responsibility nor obligation whatsoever; and the fact that the Government may have formulated, furnished, or in any way supplied the said drawings, specifications or other data is not to be regarded by implication or otherwise as in any manner licensing the holder or any other person or corporation, or conveying any rights or permission to manufacture, use, or sell any patented invention that may in any way be related thereto.

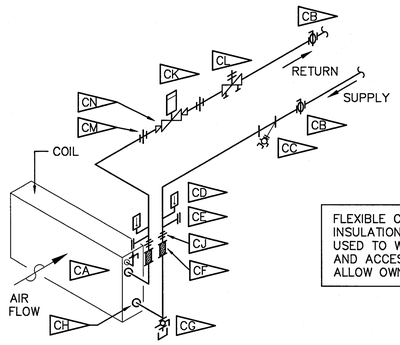

FLEXIBLE CELLULAR FOAM INSULATION SHALL BE USED TO WRAP VALVES AND ACCESSORIES TO ALLOW OWNER SERVICING

- CA — MANUAL COIL VENT, 1/4" BALL VALVE.
- CB — BALL VALVE, 2" AND SMALLER–TAPPED LUG TYPE BUTTERFLY VALVE, 2 1/2" AND LARGER WITH LEVER OPERATOR.
- CC — Y–TYPE STRAINER WITH BLOW DOWN VALVE AND HOSE END CONNECTION
- CD — THERMOMETER, 9" SCALE ADJUSTABLE ANGLE, RANGE 0–100 DEGREES F FOR CHW, WITH 3/4 INCH SEPARABLE SOCKET THERMOWELL.
- CE — PRESSURE/TEMPERATURE PORTS (PETE'S PLUG)
- CF — FLEXIBLE CONNECTOR, STAINLESS STEEL CONSTRUCTION, ANNULAR CORRUGATIONS WITH WOVEN WIRE BRAID. TYPICAL ALL COILS.
- CG — 1/2" BALL VALVE WITH HOSE END CONNECTION.
- CH — DIELECTRIC FITTINGS AT CONNECTION TO COIL.
- CJ — LOCATE FLANGES/UNIONS IMMEDIATELY ABOVE COIL PULL SPACE TO ALLOW FOR COIL PULL WITH MINIMAL REMOVAL OF PIPING.
- CK — TWO–WAY CONTROL VALVE, MODULATING. SEE CONTROL VALVE SCHEDULE
- CL — BALL TYPE CIRCUIT SETTER BALANCING VALVE
- CM — UNION 2" AND SMALLER, FLANGE 2 1/2" AND LARGER.
- CN — REDUCER WHERE REQUIRED.

COIL PIPING SCHEMATIC - SINGLE COIL

SCALE: NONE

ME M204 M301

PIPING SCHEMATIC NOTES:

1. PIPING SHALL BE ARRANGED TO PROVIDE UNOBSTRUCTED ACCESS TO FILTER SECTION, FAN SECTION, AND COIL SECTION.
2. PROVIDE EXTENDED VALVE STEMS IN ORDER FOR HANDLES TO CLEAR PIPE INSULATION.
3. CONTROL VALVE ACTUATOR SHALL BE INSTALLED IN AN UPRIGHT POSITION

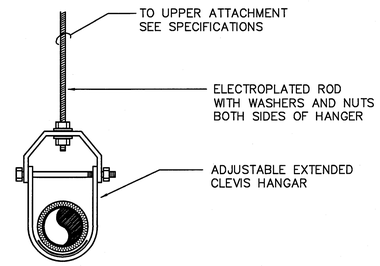

SINGLE PIPE HANGER DETAIL

SCALE: NONE

MA M204 M301

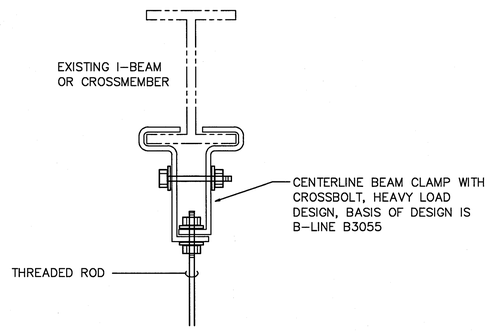

UPPER ATTACHMENT TO STEEL STRUCTURE

SCALE: NONE

MC M204 M301

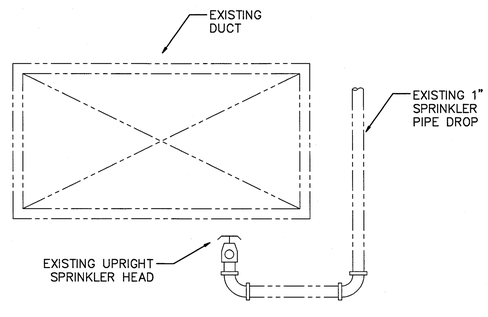

WHEN REMOVING AND REPLACING EXISTING DUCT, PROTECT EXISTING SPRINKLER HEAD, WHICH SHALL REMAIN IN SERVICE.

EXISTING SPRINKLER HEAD PROTECTION

SCALE: NONE

MF M201 M301

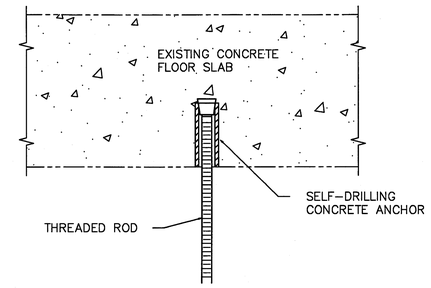

PIPE HANGER DETAIL - UPPER ATTACHMENT CONCRETE ANCHOR

SCALE: NONE

MB M204 M301

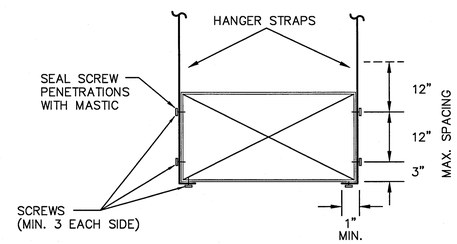

DUCT HANGER DETAIL

SCALE: NONE

MD M203 M301

A. USE TRAPEZE HANGERS FOR DUCTS WIDER THAN 48 INCHES. RECTANGULAR DUCT SHOWN, ROUND AND FLAT OVAL SIMILAR.

B. MAXIMUM SPACING BETWEEN HANGER LOCATIONS SHALL BE 8 FEET PER PAIR. STRAPS SHALL BE MINIMUM 1 1/2" WIDE BY 22 GAUGE GALVANIZED STEEL, SEE SMACNA.

THIS DRAWING CREATED ON AUTOCAD 2011 AND WILL BE REVISED ONLY ON AUTOCAD 2011 SYSTEM. FILE: 79K39690– M–301.DWG

M-301

SYM	ZONE	DESCRIPTION	DATE	APPROVED
		REVISIONS		

JOHNSON, LEVINSON RAGAN, DAVILA, INC. CONSULTING ENGINEERS
1450 Centrepark Boulevard, Suite 350 West Palm Beach, Florida 33401 (561) 689-2303 *(561) 689-2302 Fax www.jldinc.com
Certification Number 6039

SIGNATURES		DATE
DRAWN	K. GOMEZ	6/13/13
CHECKED	T. FEAGANS	6/13/13
SUBMITTED: ARCHIVE OF RECORD MICHAEL D. DAVILA		6/13/13
ST OF LICENSURE: FL LICENSE NO: 36066		
APPROVED: T. Feagans AE DEPT HEAD– T. FEAGANS		6/13/13
NASA SYS/LDE– S. MEHTA		6/13/13

NATIONAL AERONAUTICS AND SPACE ADMINISTRATION
JOHN F. KENNEDY SPACE CENTER, NASA
KENNEDY SPACE CENTER, FLORIDA

AIR HANDLERS UPGRADES
BOOSTER FABRICATION FACILITY, BFF

MECHANICAL DETAILS

FILE. NO.	SIZE	DWG. NO.	REV
	F	79K39690	
PROJ. NO. 98889.2a		SHEET 16	

KSC FORM 1–11 (3/76)(C/G 3/94)

NOTICE: When Government drawings, specifications, or other data are used for any purpose other than in connection with a definitely related Government procurement operation, the United States Government thereby incurs no responsibility nor obligation whatsoever; and the fact that the Government may have formulated, furnished, or in any way supplied the said drawings, specifications or other data is not to be regarded by implication or otherwise as in any manner licensing the holder or any other person or corporation, or conveying any rights or permission to manufacture, use, or sell any patented invention that may in any way be related thereto.

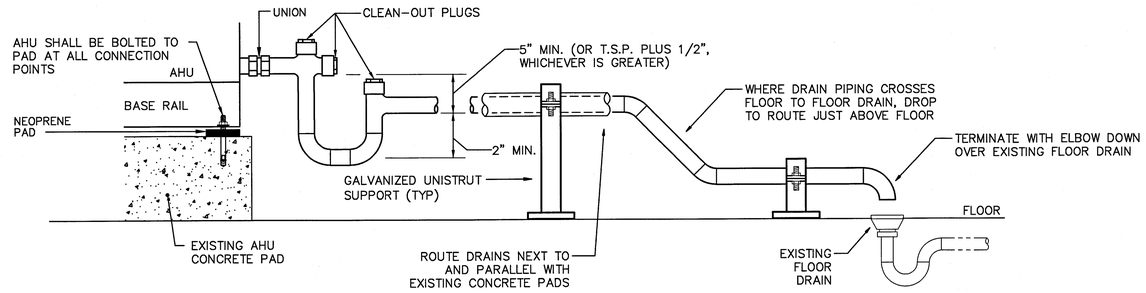

AHU CONDENSATE DRAIN DETAIL

SCALE: NONE

MG M203 M302 M204

AHU CONDENSATE DRAIN NOTES

1. CONDENSATE DRAIN SHALL BE PIPED FULL SIZE OF UNIT CONNECTION
2. PROVIDE NEOPRENE PAD BETWEEN UNIT AND BASE RAIL.
3. CONDENSATE PIPING SHALL BE INSULATED PER SPECIFICATIONS.
4. CONDENSATE PIPING SHALL BE SUPPORTED FROM FLOOR AT 5'-0" (MIN) INTERVALS
5. CONDENSATE DRAIN PIPING SHALL BE TYPE "L" HARD DRAWN WITH SOLDERED JOINTS.

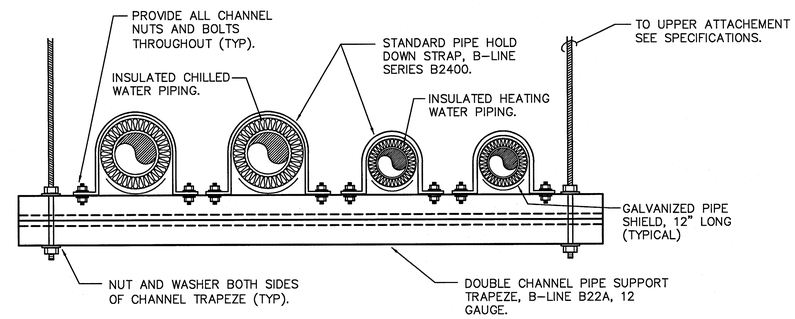

MULTIPLE PIPE TRAPEZE HANGER DETAIL

SCALE: NONE

MH M204 M302

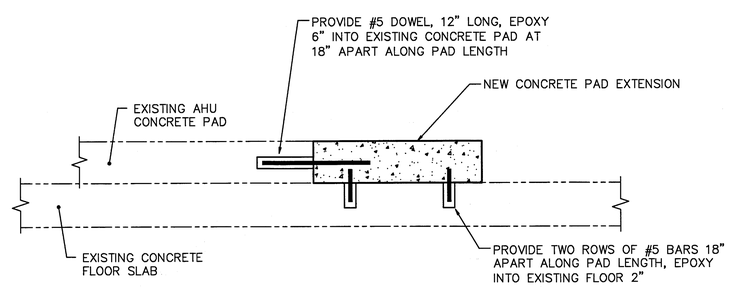

CONCRETE PAD EXTENSION FOR NEW AHU

SCALE: NONE

MJ M203 M302

THIS DRAWING CREATED ON AUTOCAD 2011 AND WILL BE REVISED ONLY ON AUTOCAD 2011 SYSTEM. FILE: 79K39690-M-302.DWG

M-302

SYM	ZONE	DESCRIPTION	DATE	APPROVED
		REVISIONS		

JOHNSON, LEVINSON RAGAN, DAVILA, INC. CONSULTING ENGINEERS
1450 Centerpark Boulevard, Suite 350 West Palm Beach, Florida 33401 (561) 689-2303 • (561) 689-2302 Fax www.jldinc.com
Certification Number 6059

SIGNATURES		DATE
DRAWN	K. GOMEZ	6/13/13
CHECKED	T. FEAGANS	6/13/13
SUBMITTED: ARCH/ENG OF RECORD	MICHAEL D. DAVILA	6/13/13
ST OF LICENSURE:	FL	
LICENSE NO:	36066	
APPROVED: AE DEPT HEAD-	T. FEAGANS	6/13/13
NASA SYS/LDE-	S. MEHTA	6/13/13

NATIONAL AERONAUTICS AND SPACE ADMINISTRATION
JOHN F. KENNEDY SPACE CENTER, NASA
KENNEDY SPACE CENTER, FLORIDA

AIR HANDLERS UPGRADES
BOOSTER FABRICATION FACILITY, BFF

MECHANICAL DETAILS

FILE. NO.	SIZE	DWG. NO.	REV
	F	79K39690	
PROJ. NO. 98889.2a		SHEET 17	

KSC FORM 1-11 (3/76)(C/G 3/94)

NOTICE: When Government drawings, specifications, or other data are used for any purpose other than in connection with a definitely related Government procurement operation, the United States Government thereby incurs no responsibility nor obligation whatsoever; and the fact that the Government may have formulated, furnished, or in any way supplied the said drawings, specifications or other data is not to be regarded by implication or otherwise as in any manner licensing the holder or any other person or corporation, or conveying any rights or permission to manufacture, use, or sell any patented invention that may in any way be related thereto.

CONTROLS LEGEND

AC	AIR COMPRESSOR
AC	ALTERNATING CURRENT
ADPT	ADAPTOR
AFD	ADJUSTABLE FREQUENCY DRIVE
AFF	ABOVE FINISHED FLOOR
AI	ANALOG INPUT
AO	ANALOG OUTPUT
ASC	APPLICATION SPECIFIC CONTROLLER
AUTO	AUTOMATIC
AWG	AMERICAN WIRE GAUGE
BAS	BUILDING AUTOMATION SYSTEM
BCP	BOILER CONTROL PANEL
BLDG	BUILDING
BTU	BRITISH THERMAL UNITS
BW	BYPASS WATER
C	COMMON
CAC	CUSTOM APPLICATION CONTROLLER
CB	CIRCUIT BREAKER
CCP	CHILLER CONTROL PANEL
CH	CHILLER
CHW	CHILLED WATER
CHWR	CHILLED WATER RETURN
CHWS	CHILLED WATER SUPPLY
CHP	CHILLER PUMP
CHWP	CHILLED WATER PUMP
CHWV	CHILLED WATER VALVE
CLS	CLOSE
CMD	COMMAND
COMM	COMMUNICATIONS
COMP	COMPRESSOR
COND	CONDENSOR
COP	COEFFICIENT OF PERFORMANCE
CPU	CENTRAL PROCESSING UNIT
CT	COOLING TOWER
CV	CONTROL VALVE
CW	CONDENSER WATER
CWP	CONDENSER WATER PUMP
CWR	CONDENSER WATER RETURN
CWS	CONDENSER WATER SUPPLY
CWV	CONDENSER WATER VALVE
DB	DRY-BULB
DDC	DIRECT DIGITAL CONTROL
DDCP	DIRECT DIGITAL CONTROL PANEL
DI	DIGITAL INPUT
DIA	DIAMETER
DO	DIGITAL OUTPUT
DPS	DIFFERENTIAL PRESSURE SENSOR
DP	DIFFERENTIAL PRESSURE (SWITCH)
E/P	ELECTRONIC TO PNEUMATIC
EF	EXHAUST FAN
EMS	ENERGY MANAGEMENT SYSTEM
EMT	ELECTRIC METALLIC TUBING
EVAP	EVAPORATOR
EXT	EXTENSION
F	FUSE
FAS	FIRE ALARM SYSTEM
FIC	FIELD INTERFACE CONTROLLER
FM	FLOW METER
FMRP	FACILITY MANAGEMENT REMOTE PANEL
FMS	FACILITY MANAGEMENT SYSTEM
FCU	FAN COIL UNIT
GFE	GOVERNMENT FURNISHED EQUIPMENT
HDR	HEADER
HMI	HUMAN MACHINE INTERFACE
HOA	HAND-OFF-AUTO
HW	HOT WATER
HWP	HOT WATER PUMP
HWR	HOT WATER RETURN
HWS	HOT WATER SUPPLY
I/O	INPUT/OUTPUT
IND	INDICATION
IP	INTERNET PROTOCOL
I/P	CURRENT TO PNEUMATIC
J-BOX	JUNCTION BOX
KW	KILOWATTS
LAT	LEAVING AIR TEMPERATURE
LAN	LOCAL AREA NETWORK
LCL	LOCAL
LS	LIMIT SWITCH
MAINT	MAINTENANCE
MIN	MINIMUM
MISC	MISCELLANEOUS
NC	NORMALLY CLOSED
NO	NORMALLY OPEN
OP	OPEN
OWS	OPERATOR WORKSTATION
P	PUMP
PCT	PERCENT
PID	PROPORTIONAL, INTEGRAL, DERIVATIVE
PLC	PROGRAMMABLE LOGIC CONTROLLER
PM	POWER METER
POS	POSITION
PRESS	PRESSURE
PRI	PRIMARY
PWR	POWER
RA	RETURN AIR
RET	RETURN
RIO	REMOTE I/O
RMT	REMOTE
RTD	RESISTIVE THERMOCOUPLE DEVICE
RTU	REMOTE TERMINAL UNIT
SCADA	SUPERVISORY CONTROL AND DATA ACQUISITION
SCU	SYSTEM CONTROL UNIT
SEC	SECONDARY
SETPT	SET POINT
SF	SUPPLY FAN
SPD	SPEED
SS	START/STOP
STAT	STATUS
STG	STAGE
SUP	SUPPLY
SYST	SYSTEM
TB	TERMINAL BLOCK
TEMP	TEMPERATURE
TSP	TWISTED SHIELDED PAIR
TTC	TELEPHONE TERMINAL CABINET
TWR	TOWER
TYP.	TYPICAL
UPS	UNINTERRUPTABLE POWER SUPPLY
V/P	VOLTAGE TO PNEUMATIC
V	VOLTS
VAC	VOLTS ALTERNATING CURRENT
VAFB	VANDENBERG AIR FORCE BASE
VAV	VARIABLE AIR VOLUME
VDC	VOLTS DIRECT CURRENT
VFD	VARIABLE FREQUENCY DRIVE
VSD	VARIABLE SPEED DRIVE
WTR	WATER

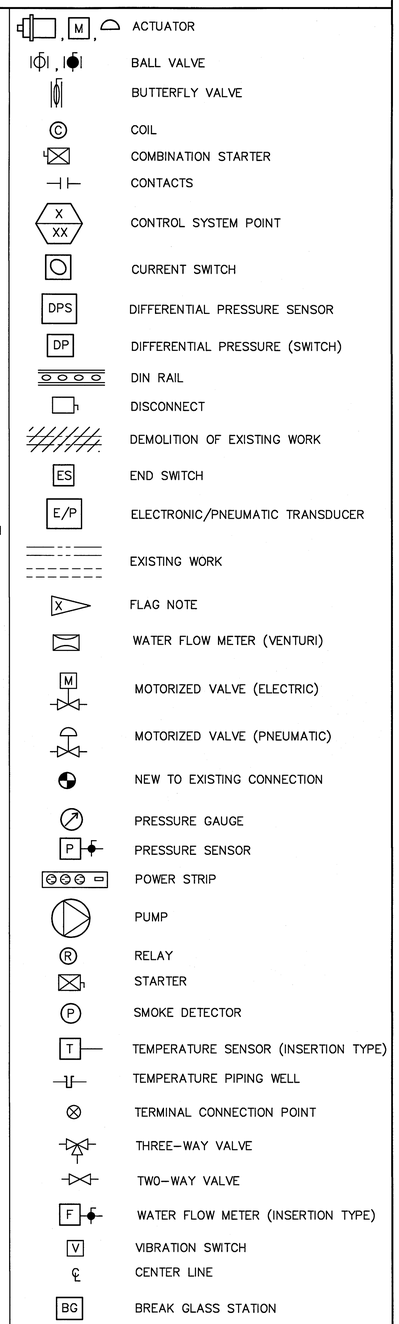

NOTE: THE TERMS ADJUSTABLE FREQUENCY DRIVE (AFD), VARIABLE FREQUENCY DRIVE (VFD) AND VARIABLE SPEED DRIVE (VSD) ARE USED SYNONYMOUSLY AS ARE THE TERMS BUILDING AUTOMATION SYSTEM (BAS), ENERGY MANAGEMENT SYSTEM (EMS) AND FACILITY MANAGEMENT SYSTEM (FMS).

GENERAL NOTES

A. DEMOLITION AND INSTALLATION TASKS SHALL BE PERFORMED IN PHASES. REFER TO PROJECT PHASING NOTES ON SHEET V-04, AND SEE SPECIFICATIONS. REFER TO M-200 AND M-300 SERIES SHEETS FOR LOCATIONS OF DEVICES.

B. THE CONTROL SYSTEM SHALL PROVIDE FOR GLOBAL DISTRIBUTED CONTROL AND MONITORING OF EQUIPMENT AND HVAC SYSTEMS. ALL NECESSARY HARDWARE, SOFTWARE, PROGRAMMING, INTEGRATION AND SERVICES SHALL BE PROVIDED AS REQUIRED TO PROVIDE A COMPLETELY FUNCTIONAL SYSTEM WHICH OPERATES IN ACCORDANCE WITH THE SPECIFIED SEQUENCES OF OPERATION. THE DOCUMENTS SET FORTH BASIC GENERAL REQUIREMENTS TO BE FOLLOWED; THE DETAILED DESIGN INCLUDING SELECTION, CHARACTERISTICS, CONFIGURATION AND APPLICATION OF THE CONTROL SYSTEM COMPONENTS IS THE EXCLUSIVE RESPONSIBILITY OF CONTRACTOR.

C. THE GENERAL SCOPE DESCRIPTION INCLUDES BUT IS NOT LIMITED TO MODIFICATION AND EXPANSION OF AN EXISTING DIRECT DIGITAL CONTROL (DDC) BASED SYSTEM AS MANUFACTURED BY CARRIER. ALL NEW DDC SYSTEM HARDWARE SHALL BE AS MANUFACTURED BY CARRIER TO BE COMPATIBLE WITH THE EXISTING EQUIPMENT. THIS PROJECT SHALL BE FULLY COORDINATED WITH THE EXISTING INSTALLED CONFIGURATION.

D. THE WORK SHALL INCLUDE, BUT NOT BY WAY OF LIMITATION, SELECTIVE DEMOLITION OF EXISTING SENSORS, END DEVICES AND PANEL MOUNTED I/P TRANSDUCERS, AS WELL AS ASSOCIATED RELATED PNEUMATIC TUBING AND WIRING (COMMUNICATION, SENSOR AND POWER) AND CONDUIT. PROVIDING AND INSTALLATION OF NEW CONTROLLER EXPANSION I/O MODULES, NEW CONTROL VALVES, PANELS, SWITCHES, REWORK/EXTENSION AND NEW CONDUIT, WIRING, NEW AND MODIFICATION/INTEGRATION WITH EXISTING PROGRAMMING, CHILLER GATEWAYS (WHERE REQUIRED), MODIFICATION OF WORKSTATION SYSTEM GRAPHICS, TERMINATIONS, COMMUNICATIONS WIRING/CABLING, TESTING, CALIBRATION, ACTIVATION, DE-BUGGING, COMMISSIONING, DEMONSTRATIONS AND TRAINING.

E. EXISTING CONDITIONS ARE TO BE FIELD VERIFIED BY THE CONTRACTOR PRIOR TO THE START OF WORK, INCLUDING I/O WIRING CONTINUITY, PERFORMING A CONTROL POINT AUDIT USING THE EXISTING OWS, VERIFICATION OF ALL INPUTS AND ALL OUTPUTS; SEE SPECIFICATION SECTIONS 02 41 00 AND 23 09 23.13 20.

F. COORDINATE LOCATION OF NEW SENSORS WITH EXISTING CONDITIONS AND NEW WORK BEING PERFORMED AND PROVIDE WELLS, CONDUIT, WIRING AND RELATED WORK AS REQUIRED. WHERE EXISTING INSULATION MUST BE DISTURBED IT SHALL BE REPLACED WITH MATERIALS AND JACKETING TO MATCH EXISTING. INSTALL NEW AND REPLACEMENT SENSORS, TUBING AND WIRING TO BE ACCESSIBLE, PROPERLY SUPPORTED AND ARRANGED SO AS NOT TO IMPEDE OR ENCROACH UPON EQUIPMENT SERVICE AND ACCESS AREAS.

G. I/O POINT NAMING SHOULD BE CONSISTENT WITH EXISTING EQUIPMENT DESIGNATIONS AND NOMENCLATURE.

H. NEW SEQUENCES OF OPERATION HAVE BEEN PROVIDED FOR THE SYSTEMS TO BE ADDRESSED UNDER THIS PROJECT. GENERALLY THE EXISTING SEQUENCES ARE SATISFACTORY BUT THE EXACT PROGRAMMING CODE IS UNDOCUMENTED. THE CONTRACTOR SHALL REVIEW THE EXISTING CODE WITH THE NEW SEQUENCES AND SUBMIT A DOCUMENT OUTLINING THE DIFFERENCES BETWEEN THE TWO. FOR EACH SEQUENCE REQUIREMENT PROVIDE THREE COLUMNS, THE FIRST WITH THE EXISTING CODE TRANSLATED TO AN ENGLISH BASED SEQUENCE FORMAT, THE SECOND COLUMN WITH THE NEW SEQUENCE FROM THESE DOCUMENTS AND THE THIRD COMMENTARY AS TO THE DIFFERENCES. NOTE WHERE EXISTING SEQUENCE CODE IS SIMILAR TO WHAT IS BEING PROPOSED AND INCLUDE COMMENTARY IF THERE ARE REASONS TO PREFER ONE OVER THE OTHER. WHERE NEW SEQUENCES INTRODUCE NEW REQUIREMENTS NOT CURRENTLY IN PLACE PROVIDE COMMENTARY AS TO ANY ADVANTAGE TO BE REALIZED BY INCORPORATING THE NEW REQUIREMENT. THE DOCUMENT WILL BE REVIEWED AND DIRECTION PROVIDED. AFTERWARDS SUBMIT THE ACTUAL SEQUENCES TO BE USED BASED UPON THE DIRECTION RECEIVED. THE SEQUENCES DO NOT REFER TO SPECIFIC DEAD BANDS, INTERLOCKS, RESET RATIOS, DELAYS AND RANGES REQUIRED FOR STABLE OPERATION. THE CONTRACTOR SHALL IDENTIFY SUCH ITEMS AND PROVIDE DETAILED CONTROL METHODOLOGIES AND AUGMENT/ENHANCE SEQUENCES TO INCORPORATE EXISTING EQUIPMENT, RESOLVE CONFLICTS AND TROUBLESHOOT SYSTEM OPERATION AS PART OF THE OVERALL PROJECT SOFTWARE DEVELOPMENT. PROVIDE MODIFICATION OF SEQUENCES, ALARMS, TRENDS, SET POINTS, PID PARAMETERS, DEAD BANDS, DELAYS AND RANGES BASED UPON THE ACTUAL PERFORMANCE AND RESPONSE OF CONTROLLED EQUIPMENT IN THE BASE CONTRACT PRICE, TO PROVIDE FOR STABLE OPERATION WITHOUT EXCESSIVE CYCLING OR HYSTERESIS.

I. ALL SETPOINTS AND VARIABLES (DEAD BANDS, MIN-MAX RANGES, INTERLOCKS, PID LOOP PARAMETERS, TIME DELAYS, ETC.) SHALL BE FULLY USER ADJUSTABLE AT THE OWS WITHOUT ANY PROGRAMMING CHANGES. ACCESSIBILITY TO MODIFY SETPOINTS, ALARMS AND SIMILAR CONTROL SYSTEM PARAMETERS SHALL BE PASSWORD PROTECTED.

J. PROVIDE MANPOWER TO ASSIST AND SUPPORT CALIBRATION OF ALL SENSORS AS WELL AS COMMISSIONING ACTIVITIES SPECIFIED IN SECTION 01 91 00. PROVIDE INITIAL FUNCTIONAL TESTS TO BE WITNESSED BY THE COMMISSIONING AUTHORITY. ONCE APPROVED, CONDUCT PERFORMANCE TESTING IN THE PRESENCE OF THE COMMISSIONING AUTHORITY FOR ALL CONTROLLED EQUIPMENT. PROVIDE TRAINING TO ALLOW GOVERNMENT OPERATION OF THE CONTROL SYSTEM AT THE CONCLUSION OF THE PROJECT. DURING COMMISSIONING AND TRAINING PROVIDE MODIFICATION OF SYSTEM GRAPHICS BASED UPON INPUT FROM THE GOVERNMENT COMMISSIONING TEAM AND SYSTEM OPERATORS AS RELAYED BY THE CONTRACTING OFFICER.

K. IN ADDITION TO SPECIFIC EQUIPMENT ALARMS NOTED IN THE SEQUENCE PROVIDE STANDARD ALARMS FOR ITEMS SUCH AS SENSOR FAILURE, OUT OF RANGE (HIGH-LOW LIMITS), FALSE CONDITIONS (PUMP OFF BUT FLOW SENSED) AND SIMILAR ITEMS NOT OTHERWISE SPECIFICALLY NOTED. ALARM RANGES SHALL BE FULLY ADJUSTABLE THROUGH THE OWS AND INCLUDE AN ADJUSTABLE EVENT TIMER OVER WHICH THE CONDITION HAS TO OCCUR TO INITIATE AN ALARM.

L. COORDINATE SEQUENCES AND DATA ACQUISITION REQUIREMENTS AND PROVIDE/SETUP TREND LOG GRAPHS, REPORTS, CALCULATE RUN HOURS AND SIMILAR PREVENTIVE MAINTENANCE FUNCTIONS.

M. SPECIFIED REQUIREMENTS, POINT TABLES, I/O SUMMARY TABLES AND SEQUENCES OF OPERATION ARE COMPLEMENTARY IN THAT THE WORK OR FEATURES CALLED FOR OR REQUIRED BY ANY ONE, SHALL APPLY TO ALL. THE CONTRACTOR SHALL COORDINATE THESE REQUIREMENTS, RECONCILE ANY DIFFERENCES, AND PROVIDE A COMPLETE SYSTEM WITH ALL OF THE FEATURES, FUNCTIONS AND SEQUENCES SPECIFIED, NOTED, INDICATED AND/OR REQUIRED TO MEET THE MONITORING, ALARMING AND CONTROL SEQUENCES.

N. MODIFICATION OF EXISTING DDC CONTROL PANELS IS REQUIRED ASSOCIATED WITH REMOVAL OF EXISTING I/P TRANSDUCERS. WHERE NEW EXPANSION MODULES ARE CALLED FOR, UNLESS OTHERWISE NOTED THEY SHALL BE PROVIDED IN A SEPARATE ENCLOSURE MOUNTED ADJACENT TO THE EXISTING ENCLOSURE. THE LOW VOLTAGE POWER FOR THE EXPANSION MODULE SHALL BE EXTENDED OVER FROM THE EXISTING PANEL.

P. WIRING SHALL BE INSTALLED IN ACCORDANCE WITH THE NATIONAL ELECTRIC CODE. CONDUCTORS SHALL BE COPPER, ONE-PIECE, AND INSTALLED WITHOUT SPLICES. WIRE NUTS ARE ALLOWED ONLY AT CONNECTION TO END DEVICES, I/O CONNECTION WITHIN CONTROL PANELS SHALL BE MADE TO TERMINAL STRIP TYPE CONNECTIONS. PROVIDE NEW AND/OR MODIFY/RELOCATE EXISTING TERMINAL STRIPS WHERE REQUIRED TO ACCOMMODATE NEW POINTS AND EXPANSION I/O MODULES. NEW WIRING/CABLING SHALL BE COLOR CODED AND ALL WIRING SHALL HAVE THE POINT DESCRIPTION AND BE NUMBER CODED ON BOTH ENDS USING HEAT SHRINK TYPE, PRE-PRINTED SLEEVES TO MATCH AS-BUILT WIRING DIAGRAMS. SPLICING OF CONTROL WIRING IS NOT ACCEPTABLE.

R. ALL CONTROL WIRING, INCLUDING POWER, SIGNALING AND COMMUNICATIONS SHALL MEET THE REQUIREMENTS SPECIFIED IN DIVISION 26, EXCEPT THAT ONE HALF INCH DIAMETER CONDUIT IS ACCEPTABLE FOR RUNOUTS TO END DEVICES/SENSORS. POWER WIRING SHALL NOT BE RUN IN THE SAME CONDUIT AS LOW VOLTAGE WIRING, SIGNAL OR COMMUNICATIONS WIRING. FINAL CONNECTION TO SENSORS AND ACTUATORS MAY BE MADE WITH FLEXIBLE CONDUIT NOT EXCEEDING 24 INCHES IN LENGTH. ALL WIRING SHALL BE RUN IN CONDUIT EXCEPT WHERE CABLE TRAY IS PRESENT IT MAY BE USED WITH THE APPROVAL OF THE CONTRACTING OFFICER.

S. 120-VOLT POWER TO THE CHILLER GATEWAY (IF REQUIRED) WILL BE PROVIDED UNDER DIVISION 26. POWER SUPPLIES, DC POWER RECTIFIERS AND EXTENSION OF POWER TO ACTUATORS, TRANSMITTERS, AND SIMILAR CONTROL DEVICES AND SENSORS SHALL BE PROVIDED UNDER DIVISION 23. DDC COMMUNICATIONS WIRING WILL BE PROVIDED UNDER DIVISION 23.

T. CONTROL WIRING AND CONDUIT IS NOT SHOWN ON THE DOCUMENTS BUT SHALL BE PROVIDED UNDER DIVISION 23. SENSOR/SIGNAL WIRING SHALL BE #18 HOOK-UP WIRE, 300 VAC LABELED AT BOTH ENDS AS TO THE DEVICE IT SERVES. ANALOG CIRCUIT (4-20 MA / 0-10 VDC) WIRING SHALL BE A SHIELDED TWISTED PAIR WITH THE SHIELD GROUNDED AT THE PLC CABINET OR MULTI-CONDUCTOR CABLE AS STANDARD WITH THE SENSOR MANUFACTURER. ADVISE THE CONTRACTING OFFICER WHERE MANUFACTURERS RECOMMENDATIONS/REQUIREMENTS DIFFER FROM THE ABOVE PRIOR TO PROCEEDING WITH THE WORK.

U. TO THE EXTENT POSSIBLE AND EXCEPT AS OTHERWISE NOTED, EXISTING CONDUIT MAY BE REUSED. WHERE EXITING CONDUIT IS SHARED AND NEW CABLING/CONDUCTORS ARE REQUIRED EITHER PROVIDE NEW CONDUIT FOR THE NEW CONDUCTORS OR AT THE CONTRACTORS OPTION, PROVIDE ALL NEW CONDUCTORS IN THE EXISTING CONDUIT. WHERE I/O DEVICES/SENSORS ARE BEING PERMANENTLY REMOVED, REMOVE CONDUIT AND WIRING TO THE GREATEST EXTENT POSSIBLE WITHOUT ADVERSELY IMPACTING WIRING TO REMAIN; AT A MINIMUM REMOVE TO THE FIRST RACEWAY WHERE EXISTING WIRING IS ENCOUNTERED WHICH IS TO REMAIN.

V. OWS GRAPHICS SHALL BE OF TWO TYPES; TABULARIZED DATA AND PICTORIAL REPRESENTATIONS OF EQUIPMENT AND SYSTEMS. THE EXISTING PICTORIAL GRAPHICS OF CHILLERS, AHU'S AND THE CHW SYSTEM SHALL BE UPDATED TO REFLECT EQUIPMENT INSTALLED UNDER THIS PROJECT. THE CHILLER DATA OBTAINED BY THE MULTIPLEXED INTERFACE TO THE CHILLER CONTROL PANELS SHALL BE PRESENTED IN A TABULAR FORMAT. PICTORIAL GRAPHICS SHALL INCLUDE DATA INCLUDED IN THE INPUT/OUTPUT SUMMARY TABLE, ALL INPUTS/OUTPUT VALUES, ON, OFF STATUS, SET POINTS AND INCLUDE VISUAL NOTIFICATION OF ALARM CONDITIONS.

W. EQUIPMENT IS TO BE REPLACED IN PHASES, REFER TO SHEET V-04 FOR A GENERAL DESCRIPTION OF THE PHASING. A PRE-WORK MEETING SHALL BE HELD PRIOR TO THE START OF WORK FOR EACH PHASE. AT THE END OF EACH PHASE, CONTROL WORK SHALL BE COMPLETED AND INTEGRATED WITH THE WORK OF PREVIOUS PHASES AS APPLICABLE. AT THE CONCLUSION OF THE PROJECT ALL CONTROL WORK SHALL BE FULLY INTEGRATED, VERIFIED, COMMISSIONED AND ELEMENTS COMMON TO ALL PHASES EVALUATED TO ENSURE THE FINAL OPERATION IS FULLY COORDINATED BETWEEN THE PHASES.

X. THE CONTROL OF MODULATING VALVES SHALL UTILIZE PROPORTIONAL-INTEGRAL-DERIVATIVE (PID) CONTROL LOOPS. THE CONTRACTOR SHALL PROVIDE GRAPHICAL INTERFACE TO THE LOOPS WITH FULLY ADJUSTABLE CONSTANTS, DELAYS AND I/O VARIABLES FOR SET-UP, MONITORING AND TUNING TO PROVIDE STABLE OPERATION.

Y. PROVIDE INTERPOSING RELAYS AS REQUIRED FOR SWITCHING AC POWER CIRCUITS AND/OR RELAY TYPE OUTPUT MODULES.

Z. DDC I/O EXPANSION MODULES SHALL BE CARRIER COMFORT CONTROLLER 6400-I/O PART NUMBER CEPL 130203. CARRIER I/O EXPANSION MODULES WILL BE GOVERNMENT FURNISHED EQUIPMENT (GFE).

SYM	ZONE	DESCRIPTION	DATE	APPROVED
		REVISIONS		

JOHNSON, LEVINSON RAGAN, DAVILA, INC. CONSULTING ENGINEERS
1450 Centrepark Boulevard, Suite 350 West Palm Beach, Florida 33401 (561) 689-2303 • (561) 689-2302 Fax www.jldinc.com
Certification Number 6039

SIGNATURES		DATE
DRAWN	K. GOMEZ	6/13/13
CHECKED	T. FEAGANS	6/13/13
SUBMITTED: ARCH/ENG OF-RECORD	MICHAEL D. DAVILA	6/13/13
ST OF LICENSURE: FL		
LICENSE No: 36066		
APPROVED: AE DEPT HEAD- T. FEAGANS		6/13/13
NASA SYS/LDE- S. MEHTA		6/13/13

NATIONAL AERONAUTICS AND SPACE ADMINISTRATION
JOHN F. KENNEDY SPACE CENTER, NASA
KENNEDY SPACE CENTER, FLORIDA

AIR HANDLERS UPGRADES
BOOSTER FABRICATION FACILITY, BFF

INSTRUMENTATION LEGEND AND GENERAL NOTES

FILE. NO.	SIZE	DWG. NO.	REV
	F	79K39690	
PROJ. NO. 98889.2a		SHEET 18	

THIS DRAWING CREATED ON AUTOCAD 2011 AND WILL BE REVISED ONLY ON AUTOCAD 2011 SYSTEM. FILE: 79K39690- M-600.DWG

M-600

KSC FORM 1-11 (3/76)(C/G 3/94)

NOTICE: When Government drawings, specifications, or other data are used for any purpose other than in connection with a definitely related Government procurement operation, the United States Government thereby incurs no responsibility nor obligation whatsoever; and the fact that the Government may have formulated, furnished, or in any way supplied the said drawings, specifications or other data is not to be regarded by implication or otherwise as in any manner licensing the holder or any other person or corporation, or conveying any rights or permission to manufacture, use, or sell any patented invention that may in any way be related thereto.

SEQUENCE OF OPERATIONS

CONSTANT VOLUME AIR HANDLING UNIT

FAN CONTROL: THE UNIT IS STARTED BY PLACING THE HAND–OFF–AUTO SWITCH IN THE HAND POSITION OR BY THE BAS WHEN THE HOA SWITCH IS IN THE AUTO POSITION. IN THE AUTOMATIC MODE DURING OCCUPIED PERIODS THE FAN SHALL BE ON, DURING UNOCCUPIED PERIODS THE FAN SHALL BE OFF. OCCUPIED–UNOCCUPIED PERIODS SHALL BE AS DEFINED AT THE OPERATORS WORKSTATION. PROOF OF FAN OPERATION SHALL BE VERIFIED THROUGH A CURRENT SWITCH. SHOULD A FAN START COMMAND BE ISSUED AND CURRENT IS NOT SENSED, AN ALARM SHALL BE GENERATED AT THE OPERATORS WORKSTATION. WHEN A FAN STOP COMMAND IS ISSUED AND CURRENT CONTINUES TO BE SENSED, AN ALARM SHALL BE GENERATED AT THE OPERATORS WORKSTATION. PROVIDE AN ALARM FOR MANUAL START/STOP DURING UNOCCUPIED/OCCUPIED PERIODS.

OPTIMUM START: AN OPTIMUM START ROUTINE SHALL ADJUST THE START TIME OF THE AHU SYSTEM. THE ROUTINE SHALL CONSIDER THE ACTUAL OUTSIDE AIR DRY BULB TEMPERATURE AS WELL AS THE HISTORICAL OUTSIDE AIR TEMPERATURE DATA AND BUILDING TEMPERATURE TO CALCULATE WHEN THE SYSTEM IS TO BE STARTED TO PRE–COOL/PRE–HEAT THE BUILDING TO THE DESIRED SPACE TEMPERATURE SET POINT (75 DEGREES COOLING 72 DEGREES HEATING – ADJUSTABLE) PRIOR TO THE SCHEDULED OCCUPANCY PERIOD. THE OUTSIDE AIR DAMPER SHALL BE CLOSED DURING THIS COOL DOWN/WARM UP PERIOD AND INTERLOCKED EXHAUST FANS OFF.

FIRE/SMOKE CONTROL: THE EXISTING AHU UNIT SHUTDOWN SHALL BE MAINTAINED. UNITS ARE INTERLOCKED WITH EXISTING AHU DUCT MOUNTED SMOKE DETECTORS (NUMBER OF DETECTORS PER UNIT AS SHOWN ON THE BUILDING FLOOR PLANS). UPON SENSING PRODUCTS OF COMBUSTION THE SMOKE DETECTOR SIGNALS THE BUILDING FIRE ALARM SYSTEM. THE FIRE ALARM SYSTEM IN–TURN ACTIVATES A FIRE ALARM SHUTDOWN RELAY INTERLOCKED WITH THE AHU FAN STARTER TO SHUT OFF THE FAN, PREVENTING UNIT OPERATION WHEN AN UNIT SMOKE DETECTOR ALARM CONDITION EXISTS.

TEMPERATURE CONTROL: WHEN THE FAN IS OPERATIONAL AS DETECTED BY THE FAN CURRENT SWITCH THE TEMPERATURE CONTROL SEQUENCE SHALL BE INITIATED. THE EXISTING SPACE TEMPERATURE SENSOR DETERMINES THE COOLING OR HEATING MODE. WHEN THE SPACE TEMPERATURE IS BELOW THE SPACE HEATING SETPOINT THE HEATING MODE IS ACTIVE, WHEN THE SPACE TEMPERATURE IS ABOVE THE SPACE COOLING SETPOINT THE COOLING MODE IS ACTIVE.

COOLING COIL: WHEN THE SPACE TEMPERATURE SENSOR IS CALLING FOR COOLING THE CHILLED WATER (CHW) VALVE IS MODULATED TO MAINTAIN THE SPACE TEMPERATURE DRY BULB SET POINT (75 DEGREES ADJUSTABLE). WHEN THE SPACE TEMPERATURE EXCEEDS THE SET POINT THE VALVE SHALL SLOWLY MODULATE OPEN TO INCREASE CHW FLOW THROUGH THE COIL. AS THE SPACE AIR TEMPERATURE DROPS BELOW THE SET POINT THE VALVE SHALL SLOWLY MODULATE TOWARDS THE CLOSED POSITION TO REDUCE CHW FLOW THROUGH THE COIL. WHEN THE FAN IS OFF, THE CHILLED WATER VALVE SHALL BE CLOSED. UPON A LOSS OF THE CONTROL VALVE SIGNAL, THE VALVE SHALL FAIL IN THE LAST POSITION.

HEATING COIL: WHEN THE SPACE TEMPERATURE SENSOR IS CALLING FOR HEATING THE HOT WATER (HW) VALVE SHALL BE MODULATED TO MAINTAIN THE SPACE DRY BULB TEMPERATURE (72 DEGREES ADJUSTABLE). WHEN THE SPACE TEMPERATURE EXCEEDS THE SET POINT THE VALVE SHALL SLOWLY MODULATE TOWARDS THE CLOSED POSITION TO REDUCE HW FLOW THROUGH THE COIL. AS THE SPACE AIR TEMPERATURE DROPS BELOW THE SET POINT THE VALVE SHALL SLOWLY MODULATE OPEN TO INCREASE HW FLOW THROUGH THE COIL. WHEN THE FAN IS OFF, THE HOT WATER VALVE SHALL BE CLOSED. UPON A LOSS OF THE CONTROL VALVE SIGNAL, THE VALVE SHALL FAIL TO THE CLOSED POSITION.

DEHUMIDIFICATION: WHEN THE SENSED SPACE RELATIVE HUMIDITY RISES ABOVE THE SET POINT (50% ADJUSTABLE) THE DEHUMIDIFICATION SEQUENCE SHALL BE ACTIVATED. IN THE DEHUMIDIFICATION MODE THE SPACE TEMPERATURE CONTROL OF THE COOLING COIL SHALL BE OVERRIDDEN AND THE COOLING CONTROL VALVE SHALL MODULATE OPEN TO PROVIDE FULL FLOW THROUGH THE COOLING COIL. THE SPACE TEMPERATURE SENSOR SHALL MODULATE THE HEATING COIL CONTROL VALVE TO MAINTAIN THE SPACE SET POINT TEMPERATURE. ONCE THE SPACE RELATIVE HUMIDITY FALLS BELOW THE SET POINT PLUS A DEADBAND, THE UNIT SHALL REVERT TO THE HEATING OR COOLING MODE OF OPERATION AS APPROPRIATE.

OUTSIDE AIR DAMPER: WHEN THE FACILITY IS IN THE OCCUPIED MODE, THE OUTSIDE AIR DAMPER SHALL BE OPEN. AT ALL OTHER TIMES THE OUTSIDE AIR DAMPER SHALL BE CLOSED. A MECHANICAL AUXILIARY CONTACT ON THE OUTSIDE AIR DAMPER ACTUATOR SHALL PROVIDE VERIFICATION OF THE DAMPER POSITION AND PROVIDE AN ALARM IF IT IS NOT OPEN WHEN THE UNIT IS SCHEDULED TO BE OCCUPIED OR NOT CLOSED WHEN THE UNIT IS SCHEDULED TO BE NON–OCCUPIED.

FILTERS: A DUCT MOUNTED DIFFERENTIAL PRESSURE SWITCH SHALL MONITOR THE PRESSURE DROP ACROSS THE FILTERS. WHEN THE FILTER PRESSURE DROP EXCEEDS THE TRIP POINT A DIRTY FILTER NOTIFICATION SHALL BE SENT TO THE OPERATORS WORKSTATION.

MONITORING POINTS: THE BAS SHALL MONITOR AND PROVIDE A REAL–TIME GRAPHICAL DISPLAY OF THE STATUS AND VALUE OF THE AHU POINTS DESCRIBED ABOVE. IN ADDITION THE LEAVING CHW AND UNIT SUPPLY AIR TEMPERATURES AND THE CHW AND HW VALVE PERCENT OPEN POSITIONS (OUTPUT SIGNAL TO THE VALVE) SHALL BE DISPLAYED.

EXHAUST FAN INTERLOCK: EXISTING EXHAUST FAN INTERLOCKS SHALL BE MAINTAINED. THE EXHAUST FAN SHALL BE ON WHENEVER THE AHU OUTSIDE AIR DAMPER IS OPEN, AND OFF WHEN THE OUTSIDE AIR DAMPER IS CLOSED.

THE SPACE TEMPERATURE AND SPACE HUMIDITY SENSOR SHALL MONITOR SPACE CONDITIONS IN THE UNOCCUPIED MODE. SHOULD THE SPACE TEMPERATURE RISE ABOVE THE COOLING SET–UP TEMPERATURE (85 DEGREES ADJUSTABLE), OR THE SPACE TEMPERATURE FALL BELOW THE HEATING SET–BACK TEMPERATURE (55 DEGREES ADJUSTABLE), OR THE SPACE HUMIDITY RISE ABOVE THE UNOCCUPIED SETPOINT (60% ADJUSTABLE) THE UNIT SHALL BE STARTED AND RUN WITH THE OUTSIDE AIR DAMPER CLOSED UNTIL THE SPACE TEMPERATURE CONDITIONS ARE WITHIN THE SETPOINT PLUS THE DEADBAND, BUT NOT LESS THAN FOR 30 MINUTES.

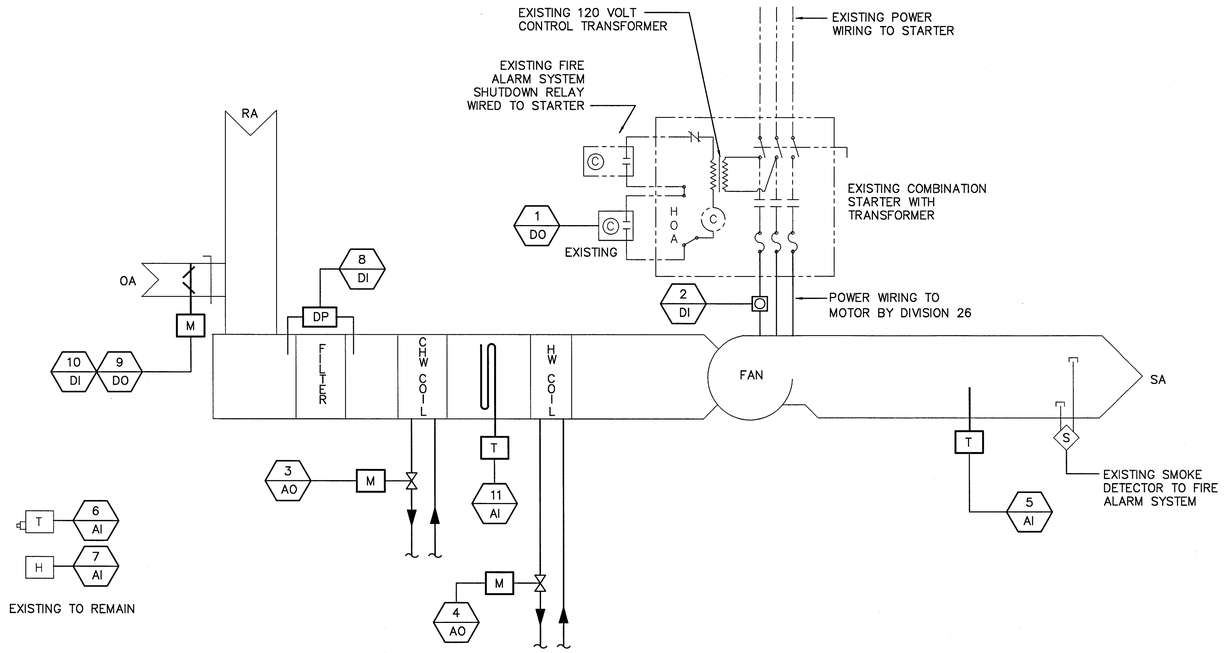

CONSTANT VOLUME AHU

TYPICAL FOR AHU–18, 23, AND 25

SYM	ZONE	DESCRIPTION	DATE	APPROVED
		REVISIONS		

JOHNSON, LEVINSON RAGAN, DAVILA, INC. CONSULTING ENGINEERS
1450 Centrepark Boulevard, Suite 350 West Palm Beach, Florida 33401 (561) 689-2303 • (561) 689-2302 Fax www.jldinc.com
Certification Number 6039

SIGNATURES		DATE
DRAWN	K. GOMEZ	6/13/13
CHECKED	T. FEAGANS	6/13/13
SUBMITTED: ARCH/ENG OF RECORD MICHAEL D. DAVILA		6/13/13
ST OF LICENSURE:	FL	
LICENSE NO:	36066	
APPROVED: T. Feagans AE DEPT HEAD– T. FEAGANS		6/13/13
NASA SYS/LDE– S. MEHTA		6/17/13

NATIONAL AERONAUTICS AND SPACE ADMINISTRATION
JOHN F. KENNEDY SPACE CENTER, NASA
KENNEDY SPACE CENTER, FLORIDA

AIR HANDLERS UPGRADES
BOOSTER FABRICATION FACILITY, BFF

MECHANICAL CONTROLS

FILE. NO.	SIZE	DWG. NO.	REV
	F	79K39690	
PROJ. NO. 98889.2a		SHEET 19	

THIS DRAWING CREATED ON AUTOCAD 2011 AND WILL BE REVISED ONLY ON AUTOCAD 2011 SYSTEM. FILE: 79K39690– M–601.DWG

M-601

KSC FORM 1–11 (3/76)(C/G 3/94)

NOTICE: When Government drawings, specifications, or other data are used for any purpose other than in connection with a definitely related Government procurement operation, the United States Government thereby incurs no responsibility nor obligation whatsoever; and the fact that the Government may have formulated, furnished, or in any way supplied the said drawings, specifications or other data is not to be regarded by implication or otherwise as in any manner licensing the holder or any other person or corporation, or conveying any rights or permission to manufacture, use, or sell any patented invention that may in any way be related thereto.

SEQUENCE OF OPERATIONS

CONSTANT VOLUME AIR HANDLING UNIT WITH PREHEAT, PURGE MODE AND FINAL FILTERS

FAN CONTROL: THE UNIT IS STARTED BY PLACING THE HAND–OFF–AUTO SWITCH IN THE HAND POSITION OR BY THE BAS WHEN THE HOA SWITCH IS IN THE AUTO POSITION. IN THE AUTOMATIC MODE DURING OCCUPIED PERIODS THE FAN SHALL BE ON, DURING UNOCCUPIED PERIODS THE FAN SHALL BE OFF. OCCUPIED–UNOCCUPIED PERIODS SHALL BE AS DEFINED AT THE OPERATORS WORKSTATION. PROOF OF FAN OPERATION SHALL BE VERIFIED THROUGH A CURRENT SWITCH. SHOULD A FAN START COMMAND BE ISSUED AND CURRENT IS NOT SENSED, AN ALARM SHALL BE GENERATED AT THE OPERATORS WORKSTATION. WHEN A FAN STOP COMMAND IS ISSUED AND CURRENT CONTINUES TO BE SENSED, AN ALARM SHALL BE GENERATED AT THE OPERATORS WORKSTATION. PROVIDE AN ALARM FOR MANUAL START/STOP DURING UNOCCUPIED/OCCUPIED PERIODS.

OPTIMUM START: AN OPTIMUM START ROUTINE SHALL ADJUST THE START TIME OF THE AHU SYSTEM. THE ROUTINE SHALL CONSIDER THE ACTUAL OUTSIDE AIR DRY BULB TEMPERATURE AS WELL AS THE HISTORICAL OUTSIDE AIR TEMPERATURE DATA AND BUILDING TEMPERATURE TO CALCULATE WHEN THE SYSTEM IS TO BE STARTED TO PRE–COOL/PRE–HEAT THE BUILDING TO THE DESIRED SPACE TEMPERATURE SET POINT (75 DEGREES COOLING 72 DEGREES HEATING – ADJUSTABLE) PRIOR TO THE SCHEDULED OCCUPANCY PERIOD. THE OUTSIDE AIR DAMPER SHALL BE CLOSED DURING THIS COOL DOWN/WARM UP PERIOD AND INTERLOCKED EXHAUST FANS OFF.

FIRE/SMOKE CONTROL: THE EXISTING AHU UNIT SHUTDOWN SHALL BE MAINTAINED. UNITS ARE INTERLOCKED WITH EXISTING AHU DUCT MOUNTED SMOKE DETECTORS (NUMBER OF DETECTORS PER UNIT AS SHOWN ON THE BUILDING FLOOR PLANS). UPON SENSING PRODUCTS OF COMBUSTION THE SMOKE DETECTOR SIGNALS THE BUILDING FIRE ALARM SYSTEM. THE FIRE ALARM SYSTEM IN–TURN ACTIVATES A FIRE ALARM SHUTDOWN RELAY INTERLOCKED WITH THE AHU FAN STARTER TO SHUT OFF THE FAN, PREVENTING UNIT OPERATION WHEN AN UNIT SMOKE DETECTOR ALARM CONDITION EXISTS.

TEMPERATURE CONTROL: WHEN THE FAN IS OPERATIONAL AS DETECTED BY THE FAN CURRENT SWITCH THE TEMPERATURE CONTROL SEQUENCE SHALL BE INITIATED. THE EXISTING SPACE TEMPERATURE SENSOR DETERMINES THE COOLING OR HEATING MODE. WHEN THE SPACE TEMPERATURE IS BELOW THE SPACE HEATING SETPOINT THE HEATING MODE IS ACTIVE, WHEN THE SPACE TEMPERATURE IS ABOVE THE SPACE COOLING SETPOINT THE COOLING MODE IS ACTIVE.

COOLING COIL: WHEN THE SPACE TEMPERATURE SENSOR IS CALLING FOR COOLING THE CHILLED WATER (CHW) VALVE IS MODULATED TO MAINTAIN THE SPACE TEMPERATURE DRY BULB SET POINT (75 DEGREES ADJUSTABLE). WHEN THE SPACE TEMPERATURE EXCEEDS THE SET POINT THE VALVE SHALL SLOWLY MODULATE OPEN TO INCREASE CHW FLOW THROUGH THE COIL. AS THE SPACE AIR TEMPERATURE DROPS BELOW THE SET POINT THE VALVE SHALL SLOWLY MODULATE TOWARDS THE CLOSED POSITION TO REDUCE CHW FLOW THROUGH THE COIL. WHEN THE FAN IS OFF, THE CHILLED WATER VALVE SHALL BE CLOSED. UPON A LOSS OF THE CONTROL VALVE SIGNAL, THE VALVE SHALL FAIL IN THE LAST POSITION.

PRE–HEAT COIL: WHEN THE OUTSIDE AIR TEMPERATURE IS BELOW 55 DEGREES (ADJUSTABLE) THE PREHEAT COIL SHALL BE AVAILABLE. THE HOT WATER (HW) PRE–HEAT COIL VALVE SHALL BE MODULATED TO MAINTAIN THE LEAVING PREHEAT COIL TEMPERATURE SETPOINT OF 51 DEGREES (ADJUSTABLE). WHEN THE LEAVING PRE–HEAT COIL TEMPERATURE EXCEEDS THE SET POINT THE VALVE SHALL SLOWLY MODULATE TOWARDS THE CLOSED POSITION TO REDUCE HW FLOW THROUGH THE COIL. AS THE LEAVING PRE–HEAT COIL TEMPERATURE DROPS BELOW THE SET POINT THE VALVE SHALL SLOWLY MODULATE OPEN TO INCREASE HW FLOW THROUGH THE COIL. WHEN THE FAN IS OFF, THE HOT WATER VALVE SHALL BE CLOSED. UPON A LOSS OF THE CONTROL VALVE SIGNAL, THE VALVE SHALL FAIL TO THE OPEN POSITION.

HEATING COIL: WHEN THE SPACE TEMPERATURE SENSOR IS CALLING FOR HEATING THE HOT WATER (HW) VALVE SHALL BE MODULATED TO MAINTAIN THE SPACE DRY BULB TEMPERATURE (72 DEGREES ADJUSTABLE). WHEN THE SPACE TEMPERATURE EXCEEDS THE SET POINT THE VALVE SHALL SLOWLY MODULATE TOWARDS THE CLOSED POSITION TO REDUCE HW FLOW THROUGH THE COIL. AS THE SPACE AIR TEMPERATURE DROPS BELOW THE SET POINT THE VALVE SHALL SLOWLY MODULATE OPEN TO INCREASE HW FLOW THROUGH THE COIL. WHEN THE FAN IS OFF, THE HOT WATER VALVE SHALL BE CLOSED. UPON A LOSS OF THE CONTROL VALVE SIGNAL, THE VALVE SHALL FAIL TO THE CLOSED POSITION.

DEHUMIDIFICATION: WHEN THE SENSED SPACE RELATIVE HUMIDITY RISES ABOVE THE SET POINT (50% ADJUSTABLE) THE DEHUMIDIFICATION SEQUENCE SHALL BE ACTIVATED. IN THE DEHUMIDIFICATION MODE THE SPACE TEMPERATURE CONTROL OF THE COOLING COIL SHALL BE OVERRIDDEN AND THE COOLING CONTROL VALVE SHALL MODULATE OPEN TO PROVIDE FULL FLOW THROUGH THE COOLING COIL. THE SPACE TEMPERATURE SENSOR SHALL MODULATE THE HEATING COIL CONTROL VALVE TO MAINTAIN THE SPACE SET POINT TEMPERATURE. ONCE THE SPACE RELATIVE HUMIDITY FALLS BELOW THE SET POINT PLUS A DEADBAND, THE UNIT SHALL REVERT TO THE HEATING OR COOLING MODE OF OPERATION AS APPROPRIATE.

OUTSIDE AIR DAMPER: WHEN THE FACILITY IS IN THE OCCUPIED MODE, THE OUTSIDE AIR DAMPER SHALL BE OPEN AT ITS MINIMUM POSITION (MIN POSITION DETERMINED DURING TEST AND BALANCE). AT ALL OTHER TIMES THE OUTSIDE AIR DAMPER SHALL BE CLOSED. A POSITION INDICATION INPUT FROM THE ACTUATOR SHALL PROVIDE VERIFICATION OF THE DAMPER POSITION AND PROVIDE AN ALARM IF IT IS NOT OPEN WHEN THE UNIT IS SCHEDULED TO BE OCCUPIED OR NOT CLOSED WHEN THE UNIT IS SCHEDULED TO BE NON–OCCUPIED.

HOOD–PURGE MODE: IN THE OCCUPIED MODE IF EITHER THE PURGE SWITCH OR THE HOOD SWITCH IS CLOSED THE OUTSIDE AIR DAMPER SHALL INDEX TO ITS FULL OPEN POSITION AND ONCE OPEN THE RETURN AIR DAMPER SHALL CLOSE. WHEN THE PURGE MODE SWITCH IS CLOSED THE OUTSIDE AIR DAMPER SHALL INDEX TO ITS FULL OPEN POSITION AND ONCE OPEN THE RETURN AIR DAMPER SHALL CLOSE AND THE TRANSFER AIR DAMPERS SHALL OPEN. WHEN THE PURGE OR HOOD SWITCH IS OPENED THE RETURN DAMPER SHALL OPEN, AND WHEN FULLY OPEN THE OUTSIDE AIR DAMPER SHALL RETURN TO ITS MINIMUM POSITION AND THE TRANSFER DAMPERS SHALL BE CLOSED.

FILTERS: DUCT MOUNTED DIFFERENTIAL PRESSURE SWITCHES SHALL MONITOR THE PRESSURE DROP ACROSS THE PRE–FILTERS AND FINAL FILTERS. THERE SHALL A SETPOINT ON EACH SWITCH. WHEN THE FILTER PRESSURE DROP EXCEEDS THE TRIP POINT A DIRTY FILTER NOTIFICATION SHALL BE SENT TO THE OPERATORS WORKSTATION.

MONITORING POINTS: THE BAS SHALL MONITOR AND PROVIDE A REAL–TIME GRAPHICAL DISPLAY OF THE STATUS AND VALUE OF THE AHU POINTS DESCRIBED ABOVE. IN ADDITION THE LEAVING CHW AND UNIT SUPPLY AIR TEMPERATURES AND THE CHW AND HW VALVE PERCENT OPEN POSITIONS (OUTPUT SIGNAL TO THE VALVE) SHALL BE DISPLAYED.

EXHAUST FAN INTERLOCK: EXISTING EXHAUST FAN INTERLOCKS SHALL BE MAINTAINED. THE EXHAUST FAN SHALL BE ON WHENEVER THE AHU OUTSIDE AIR DAMPER IS OPEN, AND OFF WHEN THE OUTSIDE AIR DAMPER IS CLOSED.

THE SPACE TEMPERATURE AND SPACE HUMIDITY SENSOR SHALL MONITOR SPACE CONDITIONS IN THE UNOCCUPIED MODE. SHOULD THE SPACE TEMPERATURE RISE ABOVE THE COOLING SET–UP TEMPERATURE (85 DEGREES ADJUSTABLE), OR THE SPACE TEMPERATURE FALL BELOW THE HEATING SET–BACK TEMPERATURE (55 DEGREES ADJUSTABLE), OR THE SPACE HUMIDITY RISE ABOVE THE UNOCCUPIED SETPOINT (60% ADJUSTABLE) THE UNIT SHALL BE STARTED AND RUN WITH THE OUTSIDE AIR DAMPER CLOSED UNTIL THE SPACE TEMPERATURE CONDITIONS ARE WITHIN THE SETPOINT PLUS THE DEADBAND, BUT NOT LESS THAN FOR 30 MINUTES.

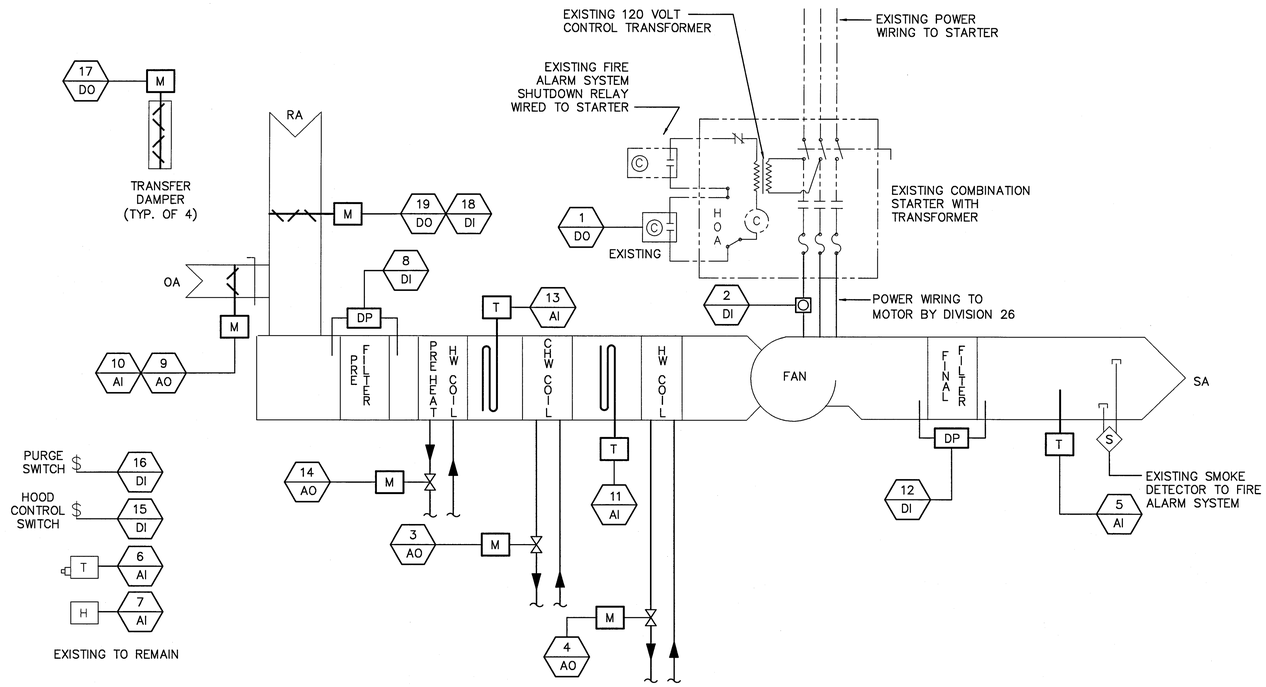

CONSTANT VOLUME AHU WITH PRE-HEAT, PURGE MODE, AND FINAL FILTERS

TYPICAL FOR AHU–21

THIS DRAWING CREATED ON AUTOCAD 2011 AND WILL BE REVISED ONLY ON AUTOCAD 2011 SYSTEM. FILE: 79K39690– M–602 .DWG

M-602

SYM	ZONE	DESCRIPTION	DATE	APPROVED
		REVISIONS		

JOHNSON, LEVINSON RAGAN, DAVILA, INC. CONSULTING ENGINEERS
1450 Centrepark Boulevard, Suite 350 West Palm Beach, Florida 33401 (561) 689-2303 (561) 689-2302 Fax www.jldinc.com
Certification Number 6039

SIGNATURES		DATE
DRAWN	K. GOMEZ	6/13/13
CHECKED	T. FEAGANS	6/13/13
SUBMITTED: ARCHITECT OF RECORD	MICHAEL D. DAVILA	6/13/13
ST OF LICENSURE:	FL	
LICENSE No:	36066	
APPROVED: AE DEPT HEAD	T. FEAGANS	6/13/13
NASA SYS/LDE–	S. MEHTA	6/13/13

NATIONAL AERONAUTICS AND SPACE ADMINISTRATION
JOHN F. KENNEDY SPACE CENTER, NASA
KENNEDY SPACE CENTER, FLORIDA

AIR HANDLERS UPGRADES
BOOSTER FABRICATION FACILITY, BFF

MECHANICAL CONTROLS

FILE. NO.	SIZE	DWG. NO.	REV
	F	79K39690	
PROJ. NO. 98889.2a		SHEET 20	

KSC FORM 1–11 (3/76)(C/G 3/94)

NOTICE: When Government drawings, specifications, or other data are used for any purpose other than in connection with a definitely related Government procurement operation, the United States Government thereby incurs no responsibility nor obligation whatsoever; and the fact that the Government may have formulated, furnished, or in any way supplied the said drawings, specifications or other data is not to be regarded by implication or otherwise as in any manner licensing the holder or any other person or corporation, or conveying any rights or permission to manufacture, use, or sell any patented invention that may in any way be related thereto.

SEQUENCE OF OPERATIONS

CONSTANT VOLUME AIR HANDLING UNIT WITH TWO POSITION OA DAMPER AND FINAL FILTERS

FAN CONTROL: THE UNIT IS STARTED BY PLACING THE HAND–OFF–AUTO SWITCH IN THE HAND POSITION OR BY THE BAS WHEN THE HOA SWITCH IS IN THE AUTO POSITION. IN THE AUTOMATIC MODE DURING OCCUPIED PERIODS THE FAN SHALL BE ON, DURING UNOCCUPIED PERIODS THE FAN SHALL BE OFF. OCCUPIED–UNOCCUPIED PERIODS SHALL BE AS DEFINED AT THE OPERATORS WORKSTATION. PROOF OF FAN OPERATION SHALL BE VERIFIED THROUGH A CURRENT SWITCH. SHOULD A FAN START COMMAND BE ISSUED AND CURRENT IS NOT SENSED, AN ALARM SHALL BE GENERATED AT THE OPERATORS WORKSTATION. WHEN A FAN STOP COMMAND IS ISSUED AND CURRENT CONTINUES TO BE SENSED, AN ALARM SHALL BE GENERATED AT THE OPERATORS WORKSTATION. PROVIDE AN ALARM FOR MANUAL START/STOP DURING UNOCCUPIED/OCCUPIED PERIODS.

OPTIMUM START: AN OPTIMUM START ROUTINE SHALL ADJUST THE START TIME OF THE AHU SYSTEM. THE ROUTINE SHALL CONSIDER THE ACTUAL OUTSIDE AIR DRY BULB TEMPERATURE AS WELL AS THE HISTORICAL OUTSIDE AIR TEMPERATURE DATA AND BUILDING TEMPERATURE TO CALCULATE WHEN THE SYSTEM IS TO BE STARTED TO PRE–COOL/PRE–HEAT THE BUILDING TO THE DESIRED SPACE TEMPERATURE SET POINT (75 DEGREES COOLING 72 DEGREES HEATING – ADJUSTABLE) PRIOR TO THE SCHEDULED OCCUPANCY PERIOD. THE OUTSIDE AIR DAMPER SHALL BE CLOSED DURING THIS COOL DOWN/WARM UP PERIOD AND INTERLOCKED EXHAUST FANS OFF.

FIRE/SMOKE CONTROL: THE EXISTING AHU UNIT SHUTDOWN SHALL BE MAINTAINED. UNITS ARE INTERLOCKED WITH EXISTING AHU DUCT MOUNTED SMOKE DETECTORS (NUMBER OF DETECTORS PER UNIT AS SHOWN ON THE BUILDING FLOOR PLANS). UPON SENSING PRODUCTS OF COMBUSTION THE SMOKE DETECTOR SIGNALS THE BUILDING FIRE ALARM SYSTEM. THE FIRE ALARM SYSTEM IN–TURN ACTIVATES A FIRE ALARM SHUTDOWN RELAY INTERLOCKED WITH THE AHU FAN STARTER TO SHUT OFF THE FAN, PREVENTING UNIT OPERATION WHEN AN UNIT SMOKE DETECTOR ALARM CONDITION EXISTS.

TEMPERATURE CONTROL: WHEN THE FAN IS OPERATIONAL AS DETECTED BY THE FAN CURRENT SWITCH THE TEMPERATURE CONTROL SEQUENCE SHALL BE INITIATED. THE EXISTING SPACE TEMPERATURE SENSOR DETERMINES THE COOLING OR HEATING MODE. WHEN THE SPACE TEMPERATURE IS BELOW THE SPACE HEATING SETPOINT THE HEATING MODE IS ACTIVE, WHEN THE SPACE TEMPERATURE IS ABOVE THE SPACE COOLING SETPOINT THE COOLING MODE IS ACTIVE.

COOLING COIL: WHEN THE SPACE TEMPERATURE SENSOR IS CALLING FOR COOLING THE CHILLED WATER (CHW) VALVE IS MODULATED TO MAINTAIN THE SPACE TEMPERATURE DRY BULB SET POINT (75 DEGREES ADJUSTABLE). WHEN THE SPACE TEMPERATURE EXCEEDS THE SET POINT THE VALVE SHALL SLOWLY MODULATE OPEN TO INCREASE CHW FLOW THROUGH THE COIL. AS THE SPACE AIR TEMPERATURE DROPS BELOW THE SET POINT THE VALVE SHALL SLOWLY MODULATE TOWARDS THE CLOSED POSITION TO REDUCE CHW FLOW THROUGH THE COIL. WHEN THE FAN IS OFF, THE CHILLED WATER VALVE SHALL BE CLOSED. UPON A LOSS OF THE CONTROL VALVE SIGNAL, THE VALVE SHALL FAIL IN THE LAST POSITION.

HEATING COIL: WHEN THE SPACE TEMPERATURE SENSOR IS CALLING FOR HEATING THE HOT WATER (HW) VALVE SHALL BE MODULATED TO MAINTAIN THE SPACE DRY BULB TEMPERATURE (72 DEGREES ADJUSTABLE). WHEN THE SPACE TEMPERATURE EXCEEDS THE SET POINT THE VALVE SHALL SLOWLY MODULATE TOWARDS THE CLOSED POSITION TO REDUCE HW FLOW THROUGH THE COIL. AS THE SPACE AIR TEMPERATURE DROPS BELOW THE SET POINT THE VALVE SHALL SLOWLY MODULATE OPEN TO INCREASE HW FLOW THROUGH THE COIL. WHEN THE FAN IS OFF, THE HOT WATER VALVE SHALL BE CLOSED. UPON A LOSS OF THE CONTROL VALVE SIGNAL, THE VALVE SHALL FAIL TO THE CLOSED POSITION.

DEHUMIDIFICATION: WHEN THE SENSED SPACE RELATIVE HUMIDITY RISES ABOVE THE SET POINT (50% ADJUSTABLE) THE DEHUMIDIFICATION SEQUENCE SHALL BE ACTIVATED. IN THE DEHUMIDIFICATION MODE THE SPACE TEMPERATURE CONTROL OF THE COOLING COIL SHALL BE OVERRIDDEN AND THE COOLING CONTROL VALVE SHALL MODULATE OPEN TO PROVIDE FULL FLOW THROUGH THE COOLING COIL. THE SPACE TEMPERATURE SENSOR SHALL MODULATE THE HEATING COIL CONTROL VALVE TO MAINTAIN THE SPACE SET POINT TEMPERATURE. ONCE THE SPACE RELATIVE HUMIDITY FALLS BELOW THE SET POINT PLUS A DEADBAND, THE UNIT SHALL REVERT TO THE HEATING OR COOLING MODE OF OPERATION AS APPROPRIATE.

OUTSIDE AIR DAMPER: WHEN THE FACILITY IS IN THE OCCUPIED MODE, THE OUTSIDE AIR DAMPER SHALL BE OPEN AT ITS MINIMUM POSITION. IF THE HOOD SWITCH IS CLOSED THE OUTSIDE AIR DAMPER SHALL INDEX TO ITS MAXIMUM POSITION (MIN POSITION DETERMINED DURING TEST AND BALANCE). AT ALL OTHER TIMES THE OUTSIDE AIR DAMPER SHALL BE CLOSED. A POSITION INDICATION INPUT FROM THE ACTUATOR SHALL PROVIDE VERIFICATION OF THE DAMPER POSITION AND PROVIDE AN ALARM IF IT IS NOT OPEN WHEN THE UNIT IS SCHEDULED TO BE OCCUPIED OR NOT CLOSED WHEN THE UNIT IS SCHEDULED TO BE NON–OCCUPIED.

FILTERS: DUCT MOUNTED DIFFERENTIAL PRESSURE SWITCHES SHALL MONITOR THE PRESSURE DROP ACROSS THE PRE–FILTERS AND FINAL FILTERS. THERE SHALL A SETPOINT ON EACH SWITCH. WHEN THE FILTER PRESSURE DROP EXCEEDS THE TRIP POINT A DIRTY FILTER NOTIFICATION SHALL BE SENT TO THE OPERATORS WORKSTATION.

MONITORING POINTS: THE BAS SHALL MONITOR AND PROVIDE A REAL–TIME GRAPHICAL DISPLAY OF THE STATUS AND VALUE OF THE AHU POINTS DESCRIBED ABOVE. IN ADDITION THE LEAVING CHW AND UNIT SUPPLY AIR TEMPERATURES AND THE CHW AND HW VALVE PERCENT OPEN POSITIONS (OUTPUT SIGNAL TO THE VALVE) SHALL BE DISPLAYED.

EXHAUST FAN INTERLOCK: EXISTING EXHAUST FAN INTERLOCKS SHALL BE MAINTAINED. THE EXHAUST FAN SHALL BE ON WHENEVER THE AHU OUTSIDE AIR DAMPER IS OPEN, AND OFF WHEN THE OUTSIDE AIR DAMPER IS CLOSED.

THE SPACE TEMPERATURE AND SPACE HUMIDITY SENSOR SHALL MONITOR SPACE CONDITIONS IN THE UNOCCUPIED MODE. SHOULD THE SPACE TEMPERATURE RISE ABOVE THE COOLING SET–UP TEMPERATURE (85 DEGREES ADJUSTABLE), OR THE SPACE TEMPERATURE FALL BELOW THE HEATING SET–BACK TEMPERATURE (55 DEGREES ADJUSTABLE), OR THE SPACE HUMIDITY RISE ABOVE THE UNOCCUPIED SETPOINT (60% ADJUSTABLE) THE UNIT SHALL BE STARTED AND RUN WITH THE OUTSIDE AIR DAMPER CLOSED UNTIL THE SPACE TEMPERATURE CONDITIONS ARE WITHIN THE SETPOINT PLUS THE DEADBAND, BUT NOT LESS THAN FOR 30 MINUTES.

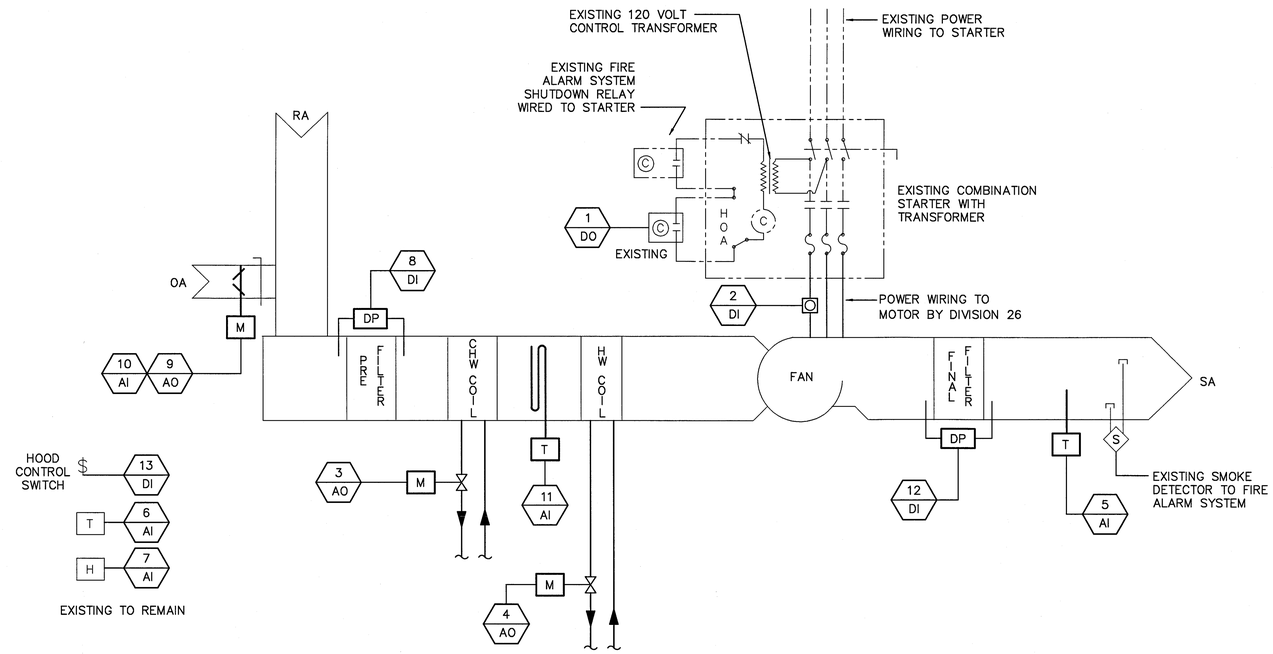

CONSTANT VOLUME AHU WITH TWO POSITION O. AIR AND FINAL FILTERS

TYPICAL FOR AHU–19, 24, 27

THIS DRAWING CREATED ON AUTOCAD 2011 AND WILL BE REVISED ONLY ON AUTOCAD 2011 SYSTEM. FILE: 79K39690– M–603.DWG

M-603

SYM	ZONE	DESCRIPTION	DATE	APPROVED
		REVISIONS		

JOHNSON, LEVINSON RAGAN, DAVILA, INC. CONSULTING ENGINEERS
1450 Centrepark Boulevard, Suite 350 West Palm Beach, Florida 33401 (561) 689-2303 • (561) 689-2302 Fax www.jldinc.com
Certification Number 6039

SIGNATURES		DATE
DRAWN	K. GOMEZ	6/13/13
CHECKED	T. FEAGANS	6/13/13
SUBMITTED: ARCH/ENG OF RECORD MICHAEL D. DAVILA		6/13/13
ST OF LICENSURE:	FL	
LICENSE NO:	36066	
APPROVED: T. Feagans AE DEPT HEAD–	T. FEAGANS	6/13/13
NASA SYS/LDE–	S. MEHTA	6/13/13

NATIONAL AERONAUTICS AND SPACE ADMINISTRATION
JOHN F. KENNEDY SPACE CENTER, NASA
KENNEDY SPACE CENTER, FLORIDA

AIR HANDLERS UPGRADES
BOOSTER FABRICATION FACILITY, BFF

MECHANICAL CONTROLS

FILE. NO.	SIZE	DWG. NO.	REV
	F	79K39690	
PROJ. NO. 98889.2a		SHEET 21	

KSC FORM 1–11 (3/76)(C/G 3/94)

NOTICE: When Government drawings, specifications, or other data are used for any purpose other than in connection with a definitely related Government procurement operation, the United States Government thereby incurs no responsibility nor obligation whatsoever; and the fact that the Government may have formulated, furnished, or in any way supplied the said drawings, specifications or other data is not to be regarded by implication or otherwise as in any manner licensing the holder or any other person or corporation, or conveying any rights or permission to manufacture, use, or sell any patented invention that may in any way be related thereto.

SEQUENCE OF OPERATIONS

CONSTANT VOLUME AIR HANDLING UNIT WITH FINAL FILTERS

FAN CONTROL: THE UNIT IS STARTED BY PLACING THE HAND–OFF–AUTO SWITCH IN THE HAND POSITION OR BY THE BAS WHEN THE HOA SWITCH IS IN THE AUTO POSITION. IN THE AUTOMATIC MODE DURING OCCUPIED PERIODS THE FAN SHALL BE ON, DURING UNOCCUPIED PERIODS THE FAN SHALL BE OFF. OCCUPIED–UNOCCUPIED PERIODS SHALL BE AS DEFINED AT THE OPERATORS WORKSTATION. PROOF OF FAN OPERATION SHALL BE VERIFIED THROUGH A CURRENT SWITCH. SHOULD A FAN START COMMAND BE ISSUED AND CURRENT IS NOT SENSED, AN ALARM SHALL BE GENERATED AT THE OPERATORS WORKSTATION. WHEN A FAN STOP COMMAND IS ISSUED AND CURRENT CONTINUES TO BE SENSED, AN ALARM SHALL BE GENERATED AT THE OPERATORS WORKSTATION. PROVIDE AN ALARM FOR MANUAL START/STOP DURING UNOCCUPIED/OCCUPIED PERIODS.

OPTIMUM START: AN OPTIMUM START ROUTINE SHALL ADJUST THE START TIME OF THE AHU SYSTEM. THE ROUTINE SHALL CONSIDER THE ACTUAL OUTSIDE AIR DRY BULB TEMPERATURE AS WELL AS THE HISTORICAL OUTSIDE AIR TEMPERATURE DATA AND BUILDING TEMPERATURE TO CALCULATE WHEN THE SYSTEM IS TO BE STARTED TO PRE–COOL/PRE–HEAT THE BUILDING TO THE DESIRED SPACE TEMPERATURE SET POINT (75 DEGREES COOLING 72 DEGREES HEATING – ADJUSTABLE) PRIOR TO THE SCHEDULED OCCUPANCY PERIOD. THE OUTSIDE AIR DAMPER SHALL BE CLOSED DURING THIS COOL DOWN/WARM UP PERIOD AND INTERLOCKED EXHAUST FANS OFF.

FIRE/SMOKE CONTROL: THE EXISTING AHU UNIT SHUTDOWN SHALL BE MAINTAINED. UNITS ARE INTERLOCKED WITH EXISTING AHU DUCT MOUNTED SMOKE DETECTORS (NUMBER OF DETECTORS PER UNIT AS SHOWN ON THE BUILDING FLOOR PLANS). UPON SENSING PRODUCTS OF COMBUSTION THE SMOKE DETECTOR SIGNALS THE BUILDING FIRE ALARM SYSTEM. THE FIRE ALARM SYSTEM IN–TURN ACTIVATES A FIRE ALARM SHUTDOWN RELAY INTERLOCKED WITH THE AHU FAN STARTER TO SHUT OFF THE FAN, PREVENTING UNIT OPERATION WHEN AN UNIT SMOKE DETECTOR ALARM CONDITION EXISTS.

TEMPERATURE CONTROL: WHEN THE FAN IS OPERATIONAL AS DETECTED BY THE FAN CURRENT SWITCH THE TEMPERATURE CONTROL SEQUENCE SHALL BE INITIATED. THE EXISTING SPACE TEMPERATURE SENSOR DETERMINES THE COOLING OR HEATING MODE. WHEN THE SPACE TEMPERATURE IS BELOW THE SPACE HEATING SETPOINT THE HEATING MODE IS ACTIVE, WHEN THE SPACE TEMPERATURE IS ABOVE THE SPACE COOLING SETPOINT THE COOLING MODE IS ACTIVE.

COOLING COIL: WHEN THE SPACE TEMPERATURE SENSOR IS CALLING FOR COOLING THE CHILLED WATER (CHW) VALVE IS MODULATED TO MAINTAIN THE SPACE TEMPERATURE DRY BULB SET POINT (75 DEGREES ADJUSTABLE). WHEN THE SPACE TEMPERATURE EXCEEDS THE SET POINT THE VALVE SHALL SLOWLY MODULATE OPEN TO INCREASE CHW FLOW THROUGH THE COIL. AS THE SPACE AIR TEMPERATURE DROPS BELOW THE SET POINT THE VALVE SHALL SLOWLY MODULATE TOWARDS THE CLOSED POSITION TO REDUCE CHW FLOW THROUGH THE COIL. WHEN THE FAN IS OFF, THE CHILLED WATER VALVE SHALL BE CLOSED. UPON A LOSS OF THE CONTROL VALVE SIGNAL, THE VALVE SHALL FAIL IN THE LAST POSITION.

HEATING COIL: WHEN THE SPACE TEMPERATURE SENSOR IS CALLING FOR HEATING THE HOT WATER (HW) VALVE SHALL BE MODULATED TO MAINTAIN THE SPACE DRY BULB TEMPERATURE (72 DEGREES ADJUSTABLE). WHEN THE SPACE TEMPERATURE EXCEEDS THE SET POINT THE VALVE SHALL SLOWLY MODULATE TOWARDS THE CLOSED POSITION TO REDUCE HW FLOW THROUGH THE COIL. AS THE SPACE AIR TEMPERATURE DROPS BELOW THE SET POINT THE VALVE SHALL SLOWLY MODULATE OPEN TO INCREASE HW FLOW THROUGH THE COIL. WHEN THE FAN IS OFF, THE HOT WATER VALVE SHALL BE CLOSED. UPON A LOSS OF THE CONTROL VALVE SIGNAL, THE VALVE SHALL FAIL TO THE CLOSED POSITION.

DEHUMIDIFICATION: WHEN THE SENSED SPACE RELATIVE HUMIDITY RISES ABOVE THE SET POINT (50% ADJUSTABLE) THE DEHUMIDIFICATION SEQUENCE SHALL BE ACTIVATED. IN THE DEHUMIDIFICATION MODE THE SPACE TEMPERATURE CONTROL OF THE COOLING COIL SHALL BE OVERRIDDEN AND THE COOLING CONTROL VALVE SHALL MODULATE OPEN TO PROVIDE FULL FLOW THROUGH THE COOLING COIL. THE SPACE TEMPERATURE SENSOR SHALL MODULATE THE HEATING COIL CONTROL VALVE TO MAINTAIN THE SPACE SET POINT TEMPERATURE. ONCE THE SPACE RELATIVE HUMIDITY FALLS BELOW THE SET POINT PLUS A DEADBAND, THE UNIT SHALL REVERT TO THE HEATING OR COOLING MODE OF OPERATION AS APPROPRIATE.

OUTSIDE AIR DAMPER: WHEN THE FACILITY IS IN THE OCCUPIED MODE, THE OUTSIDE AIR DAMPER SHALL BE OPEN. AT ALL OTHER TIMES THE OUTSIDE AIR DAMPER SHALL BE CLOSED. A MECHANICAL AUXILIARY CONTACT ON THE OUTSIDE AIR DAMPER ACTUATOR SHALL PROVIDE VERIFICATION OF THE DAMPER POSITION AND PROVIDE AN ALARM IF IT IS NOT OPEN WHEN THE UNIT IS SCHEDULED TO BE OCCUPIED OR NOT CLOSED WHEN THE UNIT IS SCHEDULED TO BE NON–OCCUPIED.

FILTERS: DUCT MOUNTED DIFFERENTIAL PRESSURE SWITCHES SHALL MONITOR THE PRESSURE DROP ACROSS THE PRE–FILTERS AND FINAL FILTERS. THERE SHALL A SETPOINT ON EACH SWITCH. WHEN THE FILTER PRESSURE DROP EXCEEDS THE TRIP POINT A DIRTY FILTER NOTIFICATION SHALL BE SENT TO THE OPERATORS WORKSTATION.

MONITORING POINTS: THE BAS SHALL MONITOR AND PROVIDE A REAL–TIME GRAPHICAL DISPLAY OF THE STATUS AND VALUE OF THE AHU POINTS DESCRIBED ABOVE. IN ADDITION THE LEAVING CHW AND UNIT SUPPLY AIR TEMPERATURES AND THE CHW AND HW VALVE PERCENT OPEN POSITIONS (OUTPUT SIGNAL TO THE VALVE) SHALL BE DISPLAYED.

EXHAUST FAN INTERLOCK: EXISTING EXHAUST FAN INTERLOCKS SHALL BE MAINTAINED. THE EXHAUST FAN SHALL BE ON WHENEVER THE AHU OUTSIDE AIR DAMPER IS OPEN, AND OFF WHEN THE OUTSIDE AIR DAMPER IS CLOSED.

THE SPACE TEMPERATURE AND SPACE HUMIDITY SENSOR SHALL MONITOR SPACE CONDITIONS IN THE UNOCCUPIED MODE. SHOULD THE SPACE TEMPERATURE RISE ABOVE THE COOLING SET–UP TEMPERATURE (85 DEGREES ADJUSTABLE), OR THE SPACE TEMPERATURE FALL BELOW THE HEATING SET–BACK TEMPERATURE (55 DEGREES ADJUSTABLE), OR THE SPACE HUMIDITY RISE ABOVE THE UNOCCUPIED SETPOINT (60% ADJUSTABLE) THE UNIT SHALL BE STARTED AND RUN WITH THE OUTSIDE AIR DAMPER CLOSED UNTIL THE SPACE TEMPERATURE CONDITIONS ARE WITHIN THE SETPOINT PLUS THE DEADBAND, BUT NOT LESS THAN FOR 30 MINUTES.

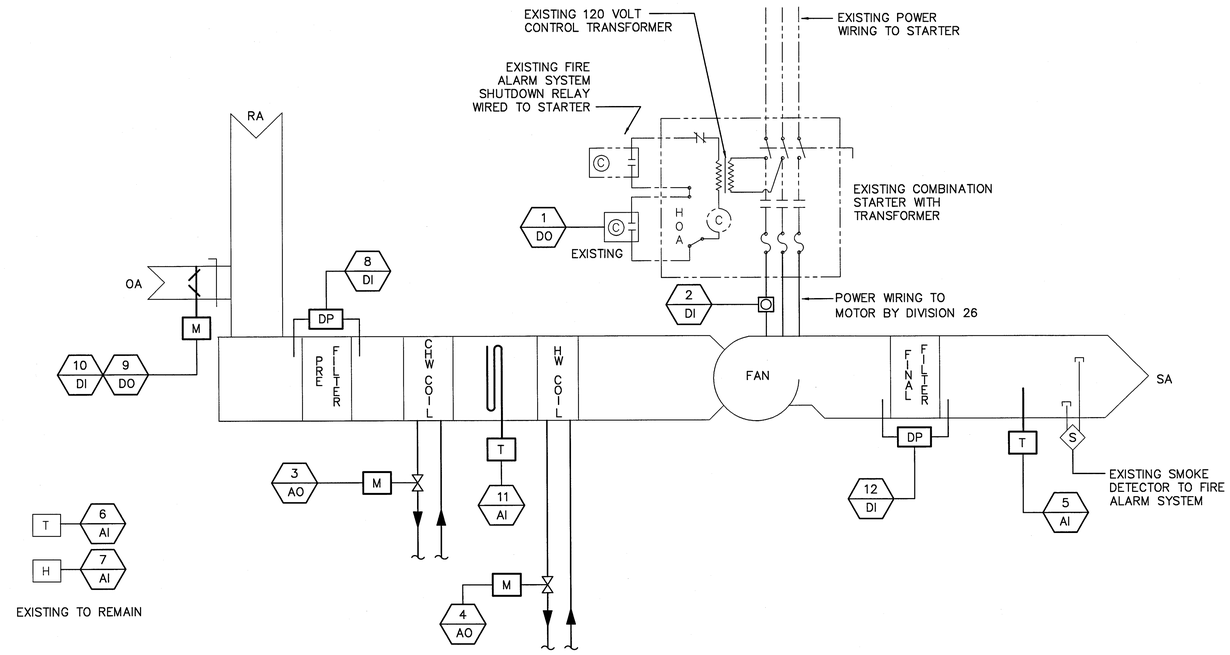

CONSTANT VOLUME AHU WITH FINAL FILTERS

TYPICAL FOR AHU–20, 22, 26, 30

THIS DRAWING CREATED ON AUTOCAD 2011 AND WILL BE REVISED ONLY ON AUTOCAD 2011 SYSTEM. FILE: 79K39690– M–604 .DWG

M-604

SYM	ZONE	DESCRIPTION	DATE	APPROVED
		REVISIONS		

JOHNSON, LEVINSON RAGAN, DAVILA, INC. CONSULTING ENGINEERS
1450 Centrepark Boulevard, Suite 350 West Palm Beach, Florida 33401 (561) 689.2303 (561) 689.2302 Fax www.jldinc.com
Certification Number 6099

SIGNATURES		DATE
DRAWN	K. GOMEZ	6/13/13
CHECKED	T. FEAGANS	6/13/13
SUBMITTED: ARCH/ENG OF RECORD	MICHAEL D. DAVILA	6/13/13
ST OF LICENSURE: FL	LICENSE NO: 36066	
APPROVED: AE DEPT HEAD– T. FEAGANS		6/13/13
NASA SYS/LDE– S. MEHTA		6/13/13

NATIONAL AERONAUTICS AND SPACE ADMINISTRATION
JOHN F. KENNEDY SPACE CENTER, NASA
KENNEDY SPACE CENTER, FLORIDA

AIR HANDLERS UPGRADES
BOOSTER FABRICATION FACILITY, BFF

MECHANICAL CONTROLS

FILE. NO.	SIZE	DWG. NO.	REV
	F	79K39690	
PROJ. NO. 98889.2a		SHEET 22	

KSC FORM 1-11 (3/76)(C/G 3/94)

NOTICE: When Government drawings, specifications, or other data are used for any purpose other than in connection with a definitely related Government procurement operation, the United States Government thereby incurs no responsibility nor obligation whatsoever; and the fact that the Government may have formulated, furnished, or in any way supplied the said drawings, specifications or other data is not to be regarded by implication or otherwise as in any manner licensing the holder or any other person or corporation, or conveying any rights or permission to manufacture, use, or sell any patented invention that may in any way be related thereto.

AHU DDC POINTS LIST

CONTROLLER	AHU	POINT NUMBER	POINT TYPE	NEW/EXISTING	POINT DESCRIPTION	NOTES
CONTROLLER UC-22 (A)	AHU-18	1	DIGITAL OUTPUT	EXISTING	AHU START/STOP	C
		2	DIGITAL INPUT	EXISTING	AHU ON/OFF STATUS	D
		3	ANALOG OUTPUT	EXISTING	COOLING COIL VALVE MODULATE	E
		4	ANALOG OUTPUT	EXISTING	HEATING COIL VALVE MODULATE	E
		5	ANALOG INPUT	EXISTING	AHU SUPPLY TEMPERATURE	D
		6	ANALOG INPUT	EXISTING	SPACE TEMPERATURE	C
		7	ANALOG INPUT	EXISTING	SPACE RELATIVE HUMIDITY	C
		8	DIGITAL INPUT	EXISTING	PRE-FILTER CLEAN/DIRTY STATUS	D
		9	ANALOG OUTPUT	EXISTING	OUTSIDE AIR DAMPER OPEN/CLOSE	E
		10	ANALOG INPUT	NEW	OUTSIDE AIR DAMPER STATUS	D
		11	ANALOG INPUT	NEW	COOLING COIL LEAVING TEMP	D
	AHU-19	1	DIGITAL OUTPUT	EXISTING	AHU START/STOP	C
		2	DIGITAL INPUT	EXISTING	AHU ON/OFF STATUS	D
		3	ANALOG OUTPUT	EXISTING	COOLING COIL VALVE MODULATE	E
		4	ANALOG OUTPUT	EXISTING	HEATING COIL VALVE MODULATE	E
		5	ANALOG INPUT	EXISTING	AHU SUPPLY TEMPERATURE	D
		6	ANALOG INPUT	EXISTING	SPACE TEMPERATURE	C
		7	ANALOG INPUT	EXISTING	SPACE RELATIVE HUMIDITY	C
		8	DIGITAL INPUT	EXISTING	PRE-FILTER CLEAN/DIRTY STATUS	D
		9	ANALOG OUTPUT	EXISTING	OUTSIDE AIR DAMPER MODULATE	E
		10	ANALOG INPUT	NEW	OUTSIDE AIR DAMPER POSITION	D
		11	ANALOG INPUT	NEW	COOLING COIL LEAVING TEMP	D
		12	DIGITAL INPUT	EXISTING	FINAL-FILTER CLEAN/DIRTY STATUS	D
		13	DIGITAL INPUT	EXISTING	HOOD SWITCH ON/OFF STATUS	C
CONTROLLER UC-24	AHU-20	1	DIGITAL OUTPUT	EXISTING	AHU START/STOP	C
		2	DIGITAL INPUT	EXISTING	AHU ON/OFF STATUS	D
		3	ANALOG OUTPUT	EXISTING	COOLING COIL VALVE MODULATE	E
		4	ANALOG OUTPUT	EXISTING	HEATING COIL VALVE MODULATE	E
		5	ANALOG INPUT	EXISTING	AHU SUPPLY TEMPERATURE	D
		6	ANALOG INPUT	EXISTING	SPACE TEMPERATURE	C
		7	ANALOG INPUT	EXISTING	SPACE RELATIVE HUMIDITY	C
		8	DIGITAL INPUT	EXISTING	PRE-FILTER CLEAN/DIRTY STATUS	D
		9	DIGITAL OUTPUT	EXISTING	OUTSIDE AIR DAMPER OPEN/CLOSE	E
		10	DIGITAL INPUT	NEW	OUTSIDE AIR DAMPER STATUS	B, D
		11	ANALOG INPUT	NEW	COOLING COIL LEAVING TEMP	B, D
		12	DIGITAL INPUT	EXISTING	FINAL-FILTER CLEAN/DIRTY STATUS	D
	AHU-22	1	DIGITAL OUTPUT	EXISTING	AHU START/STOP	C
		2	DIGITAL INPUT	EXISTING	AHU ON/OFF STATUS	D
		3	ANALOG OUTPUT	EXISTING	COOLING COIL VALVE MODULATE	E
		4	ANALOG OUTPUT	EXISTING	HEATING COIL VALVE MODULATE	E
		5	ANALOG INPUT	EXISTING	AHU SUPPLY TEMPERATURE	D
		6	ANALOG INPUT	EXISTING	SPACE TEMPERATURE	C
		7	ANALOG INPUT	EXISTING	SPACE RELATIVE HUMIDITY	C
		8	DIGITAL INPUT	EXISTING	PRE-FILTER CLEAN/DIRTY STATUS	D
		9	DIGITAL OUTPUT	EXISTING	OUTSIDE AIR DAMPER OPEN/CLOSE	E
		10	DIGITAL INPUT	NEW	OUTSIDE AIR DAMPER STATUS	B, D
		11	ANALOG INPUT	NEW	COOLING COIL LEAVING TEMP	B, D
		12	DIGITAL INPUT	EXISTING	FINAL-FILTER CLEAN/DIRTY STATUS	D
CONTROLLER UC-23 (A)	AHU-21	1	DIGITAL OUTPUT	EXISTING	AHU START/STOP	C
		2	DIGITAL INPUT	EXISTING	AHU ON/OFF STATUS	D
		3	ANALOG OUTPUT	EXISTING	COOLING COIL VALVE MODULATE	E
		4	ANALOG OUTPUT	EXISTING	HEATING COIL VALVE MODULATE	E
		5	ANALOG INPUT	EXISTING	AHU SUPPLY TEMPERATURE	D
		6	ANALOG INPUT	EXISTING	SPACE TEMPERATURE	C
		7	ANALOG INPUT	EXISTING	SPACE RELATIVE HUMIDITY	C
		8	DIGITAL INPUT	EXISTING	PRE-FILTER CLEAN/DIRTY STATUS	D
		9	ANALOG OUTPUT	EXISTING	OUTSIDE AIR DAMPER MODULATE	E
		10	ANALOG INPUT	EXISTING	OUTSIDE AIR DAMPER POSITION	D
		11	ANALOG INPUT	NEW	COOLING COIL LEAVING TEMP	D
		12	DIGITAL INPUT	EXISTING	FINAL-FILTER CLEAN/DIRTY STATUS	D
		13	ANALOG INPUT	EXISTING	PRE-HEAT COIL LEAVING TEMP	D
		14	ANALOG OUTPUT	EXISTING	PRE-HEAT COIL VALVE MODULATE	E
		15	DIGITAL INPUT	EXISTING	HOOD CONTROL SWITCH	C
		16	DIGITAL INPUT	EXISTING	PURGE SWITCH	C
		17	DIGITAL OUTPUT	EXISTING	TRANSFER DAMPER	F
		18	DIGITAL INPUT	EXISTING	RETURN AIR DAMPER STATUS	E
		19	DIGITAL OUTPUT	NEW	RETURN AIR DAMPER OPEN/CLOSE	E

AHU DDC POINTS LIST

CONTROLLER	AHU	POINT NUMBER	POINT TYPE	NEW/EXISTING	POINT DESCRIPTION	NOTES
CONTROLLER UC-25 (A)	AHU-23	1	DIGITAL OUTPUT	EXISTING	AHU START/STOP	C
		2	DIGITAL INPUT	EXISTING	AHU ON/OFF STATUS	D
		3	ANALOG OUTPUT	EXISTING	COOLING COIL VALVE MODULATE	E
		4	ANALOG OUTPUT	EXISTING	HEATING COIL VALVE MODULATE	E
		5	ANALOG INPUT	EXISTING	AHU SUPPLY TEMPERATURE	D
		6	ANALOG INPUT	EXISTING	SPACE TEMPERATURE	C
		7	ANALOG INPUT	EXISTING	SPACE RELATIVE HUMIDITY	C
		8	DIGITAL INPUT	EXISTING	PRE-FILTER CLEAN/DIRTY STATUS	D
		9	DIGITAL OUTPUT	EXISTING	OUTSIDE AIR DAMPER OPEN/CLOSE	E
		10	DIGITAL INPUT	NEW	OUTSIDE AIR DAMPER STATUS	D
		11	ANALOG INPUT	NEW	COOLING COIL LEAVING TEMP	D
	AHU-25	1	DIGITAL OUTPUT	EXISTING	AHU START/STOP	C
		2	DIGITAL INPUT	EXISTING	AHU ON/OFF STATUS	D
		3	ANALOG OUTPUT	EXISTING	COOLING COIL VALVE MODULATE	E
		4	ANALOG OUTPUT	EXISTING	HEATING COIL VALVE MODULATE	E
		5	ANALOG INPUT	EXISTING	AHU SUPPLY TEMPERATURE	D
		6	ANALOG INPUT	EXISTING	SPACE TEMPERATURE	C
		7	ANALOG INPUT	EXISTING	SPACE RELATIVE HUMIDITY	C
		8	DIGITAL INPUT	EXISTING	PRE-FILTER CLEAN/DIRTY STATUS	D
		9	DIGITAL OUTPUT	EXISTING	OUTSIDE AIR DAMPER OPEN/CLOSE	E
		10	DIGITAL INPUT	NEW	OUTSIDE AIR DAMPER STATUS	D
		11	ANALOG INPUT	NEW	COOLING COIL LEAVING TEMP	D
CONTROLLER UC-26 (A)	AHU-24	1	DIGITAL OUTPUT	EXISTING	AHU START/STOP	C
		2	DIGITAL INPUT	EXISTING	AHU ON/OFF STATUS	D
		3	ANALOG OUTPUT	EXISTING	COOLING COIL VALVE MODULATE	E
		4	ANALOG OUTPUT	EXISTING	HEATING COIL VALVE MODULATE	E
		5	ANALOG INPUT	EXISTING	AHU SUPPLY TEMPERATURE	D
		6	ANALOG INPUT	EXISTING	SPACE TEMPERATURE	C
		7	ANALOG INPUT	EXISTING	SPACE RELATIVE HUMIDITY	C
		8	DIGITAL INPUT	EXISTING	PRE-FILTER CLEAN/DIRTY STATUS	D
		9	ANALOG OUTPUT	EXISTING	OUTSIDE AIR DAMPER MODULATE	E
		10	ANALOG INPUT	NEW	OUTSIDE AIR DAMPER POSITION	D
		11	ANALOG INPUT	NEW	COOLING COIL LEAVING TEMP	D
		12	DIGITAL INPUT	EXISTING	FINAL-FILTER CLEAN/DIRTY STATUS	D
		13	DIGITAL INPUT	EXISTING	HOOD SWITCH ON/OFF STATUS	C
	AHU-26	1	DIGITAL OUTPUT	EXISTING	AHU START/STOP	C
		2	DIGITAL INPUT	EXISTING	AHU ON/OFF STATUS	D
		3	ANALOG OUTPUT	EXISTING	COOLING COIL VALVE MODULATE	E
		4	ANALOG OUTPUT	EXISTING	HEATING COIL VALVE MODULATE	E
		5	ANALOG INPUT	EXISTING	AHU SUPPLY TEMPERATURE	D
		6	ANALOG INPUT	EXISTING	SPACE TEMPERATURE	C
		7	ANALOG INPUT	EXISTING	SPACE RELATIVE HUMIDITY	C
		8	DIGITAL INPUT	EXISTING	PRE-FILTER CLEAN/DIRTY STATUS	D
		9	DIGITAL OUTPUT	EXISTING	OUTSIDE AIR DAMPER OPEN/CLOSE	E
		10	DIGITAL INPUT	NEW	OUTSIDE AIR DAMPER STATUS	D
		11	ANALOG INPUT	NEW	COOLING COIL LEAVING TEMP	D
		12	DIGITAL INPUT	EXISTING	FINAL-FILTER CLEAN/DIRTY STATUS	D
CONTROLLER UC-27 (A)	AHU-27	1	DIGITAL OUTPUT	EXISTING	AHU START/STOP	C
		2	DIGITAL INPUT	EXISTING	AHU ON/OFF STATUS	D
		3	ANALOG OUTPUT	EXISTING	COOLING COIL VALVE MODULATE	E
		4	ANALOG OUTPUT	EXISTING	HEATING COIL VALVE MODULATE	E
		5	ANALOG INPUT	EXISTING	AHU SUPPLY TEMPERATURE	D
		6	ANALOG INPUT	EXISTING	SPACE TEMPERATURE	C
		7	ANALOG INPUT	EXISTING	SPACE RELATIVE HUMIDITY	C
		8	DIGITAL INPUT	EXISTING	PRE-FILTER CLEAN/DIRTY STATUS	D
		9	ANALOG OUTPUT	EXISTING	OUTSIDE AIR DAMPER MODULATE	E
		10	ANALOG INPUT	NEW	OUTSIDE AIR DAMPER POSITION	D
		11	ANALOG INPUT	NEW	COOLING COIL LEAVING TEMP	D
		12	DIGITAL INPUT	EXISTING	FINAL-FILTER CLEAN/DIRTY STATUS	D
		13	DIGITAL INPUT	EXISTING	HOOD SWITCH ON/OFF STATUS	C
	AHU-30	1	DIGITAL OUTPUT	EXISTING	AHU START/STOP	C
		2	DIGITAL INPUT	EXISTING	AHU ON/OFF STATUS	D
		3	ANALOG OUTPUT	EXISTING	COOLING COIL VALVE MODULATE	E
		4	ANALOG OUTPUT	EXISTING	HEATING COIL VALVE MODULATE	E
		5	ANALOG INPUT	EXISTING	AHU SUPPLY TEMPERATURE	D
		6	ANALOG INPUT	EXISTING	SPACE TEMPERATURE	C
		7	ANALOG INPUT	EXISTING	SPACE RELATIVE HUMIDITY	C
		8	DIGITAL INPUT	EXISTING	PRE-FILTER CLEAN/DIRTY STATUS	D
		9	DIGITAL OUTPUT	EXISTING	OUTSIDE AIR DAMPER OPEN/CLOSE	E
		10	DIGITAL INPUT	NEW	OUTSIDE AIR DAMPER STATUS	D
		11	ANALOG INPUT	NEW	COOLING COIL LEAVING TEMP	D
		12	DIGITAL INPUT	EXISTING	FINAL-FILTER CLEAN/DIRTY STATUS	D

SPECIFIC NOTES

- A. NEW COMFORT CONTROLLER 6400-I/O (PART CEPL 13203) EXPANSION MODULE TO BE GFE, INSTALL IN NEW ENCLOSURE ADJACENT TO EXISTING CONTROLLER. CONNECT TO EXISTING POWER SUPPLY, NETWORK, AND NEW I/O POINTS.
- B. SPARE POINT AVAILABLE IN EXISTING CONTROLLER.
- C. EXISTING POINT TO REMAIN AS-IS
- D. NEW SENSOR, PROVIDE NEW SIGNAL WIRING BACK TO CONTROLLER
- E. NEW DEVICE AND ELECTRIC MOTORIZED ACTUATOR, PROVIDE NEW SIGNAL WIRING BACK TO CONTROLLER.
- F. PROVIDE NEW ELECTRIC ACTUATOR ON EXISTING PURGE DAMPERS (4) LOCATED ABOVE CEILING ALONG THE NORTH WALL OF THE FINAL CLEAN ROOM M-109A.
- G. SEE SHEET M-203 FOR LOCATION OF EXISTING AHU CONTROLLERS.

THIS DRAWING CREATED ON AUTOCAD 2011 AND WILL BE REVISED ONLY ON AUTOCAD 2011 SYSTEM. FILE: 79K39690- M-605.DWG

SYM	ZONE	DESCRIPTION	DATE	APPROVED

REVISIONS

JOHNSON, LEVINSON RAGAN, DAVILA, INC. CONSULTING ENGINEERS
1450 Centrepark Boulevard, Suite 350 West Palm Beach, Florida 33401 (561) 689-2303 • (561) 689-2302 Fax www.jlrdinc.com
Certification Number 6059

SIGNATURES		DATE
DRAWN	K. GOMEZ	6/13/13
CHECKED	T. FEAGANS	6/13/13
SUBMITTED: ARCH/ENG OF RECORD	MICHAEL D. DAVILA	6/13/13
ST OF LICENSURE:	FL	
LICENSE NO:	36066	
APPROVED: AE DEPT HEAD-	T. FEAGANS	6/13/13
NASA SYS/LDE-	S. MEHTA	6/17/13

NATIONAL AERONAUTICS AND SPACE ADMINISTRATION
JOHN F. KENNEDY SPACE CENTER, NASA
KENNEDY SPACE CENTER, FLORIDA

AIR HANDLERS UPGRADES
BOOSTER FABRICATION FACILITY, BFF

MECHANICAL CONTROLS

FILE. NO. | SIZE F | DWG. NO. 79K39690 | REV
PROJ. NO. 98889.2a | SHEET 23

M-605

NOTICE: When Government drawings, specifications, or other data are used for any purpose other than in connection with a definitely related Government procurement operation, the United States Government thereby incurs no responsibility nor obligation whatsoever; and the fact that the Government may have formulated, furnished, or in any way supplied the said drawings, specifications or other data is not to be regarded by implication or otherwise as in any manner licensing the holder or any other person or corporation, or conveying any rights or permission to manufacture, use, or sell any patented invention that may in any way be related thereto.

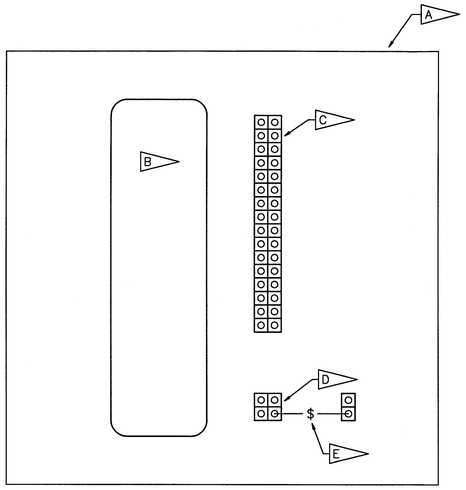

EXPANSION I/O ENCLOSURE

SCALE: NONE

MM M203 M606

- A — 20x16 ENCLOSURE SIMILAR TO HOFFMAN A2016ATIPP, COORDINATE EXACT MOUNTING WITH EXISTING CONDITIONS
- B — CARRIER 6400-IO EXPANSION MODULE (GFE)
- C — I/O TERMINAL BLOCK
- D — 24VAC POWER BLOCK EXTEND POWER FROM ADJACENT PANEL
- E — POWER DISCONNECT SWITCH

THIS DRAWING CREATED ON AUTOCAD 2011 AND WILL BE REVISED ONLY ON AUTOCAD 2011 SYSTEM. FILE: 79K39690- M-606 .DWG

M-606

SYM	ZONE	DESCRIPTION	DATE	APPROVED
		REVISIONS		

JOHNSON, LEVINSON RAGAN, DAVILA, INC. CONSULTING ENGINEERS
1450 Centrepark Boulevard, Suite 350 West Palm Beach, Florida 33401 (561) 689-2303 • (561) 689-2302 Fax www.jldinc.com
Certification Number 6059

SIGNATURES		DATE
DRAWN	K. GOMEZ	6/13/13
CHECKED	T. FEAGANS	6/13/13
SUBMITTED: ARCH/ENG OF RECORD MICHAEL D. DAVILA		6/19/13
ST OF LICENSURE:	FL	
LICENSE NO:	36066	
APPROVED: AE DEPT HEAD-	T. FEAGANS	6/13/13
NASA SYS/LDE-	S. MEHTA	6/19/13

NATIONAL AERONAUTICS AND SPACE ADMINISTRATION
JOHN F. KENNEDY SPACE CENTER, NASA
KENNEDY SPACE CENTER, FLORIDA

AIR HANDLERS UPGRADES
BOOSTER FABRICATION FACILITY, BFF

DETAILS

FILE. NO.	SIZE	DWG. NO.	REV
	F	79K39690	
PROJ. NO. 98889.2a		SHEET 24	

KSC FORM 1-11 (3/76)(C/G 3/94)

NOTICE: When Government drawings, specifications, or other data are used for any purpose other than in connection with a definitely related Government procurement operation, the United States Government thereby incurs no responsibility nor obligation whatsoever; and the fact that the Government may have formulated, furnished, or in any way supplied the said drawings, specifications or other data is not to be regarded by implication or otherwise as in any manner licensing the holder or any other person or corporation, or conveying any rights or permission to manufacture, use, or sell any patented invention that may in any way be related thereto.

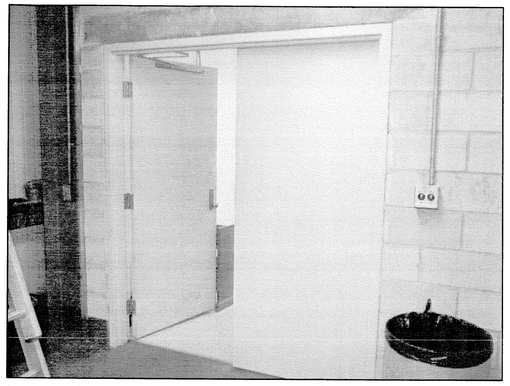

MECHANICAL ROOM MEZZANINE DOUBLE DOORS FOR AIR HANDLER TRANSFER

SCALE: NONE

P01 M202 PH101

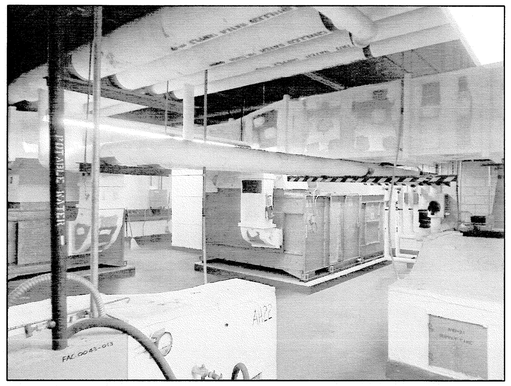

VIEW LOOKING TOWARDS AHU-18 AND AHU-21 FROM AHU-22 AREA

SCALE: NONE

P02 M202 PH101

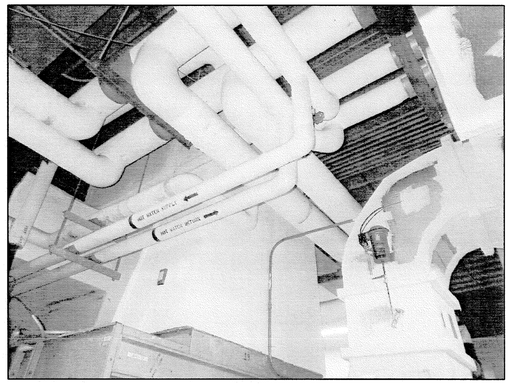

AHU-19 AND ASSOCIATED BRANCH CHW AND HW PIPING

SCALE: NONE

P03 M202 PH101

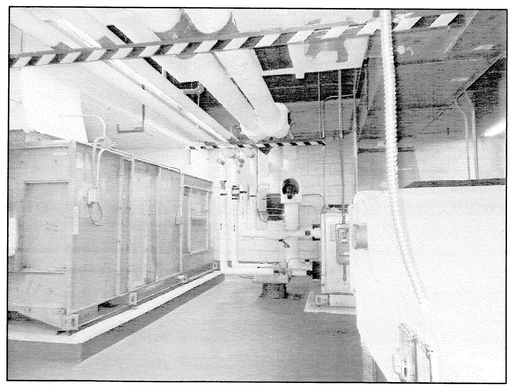

BRANCH PIPES SERVING AHU-21 NEXT TO AHU-18

SCALE: NONE

P04 M202 PH101

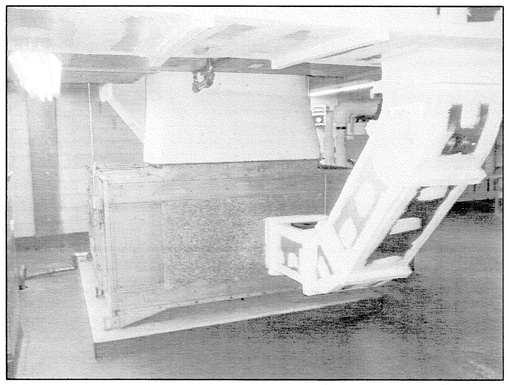

AHU-23 RETURN AIR DROP AND OUTDOOR AIR DUCT DROP TO UNIT

SCALE: NONE

P05 M201 PH101

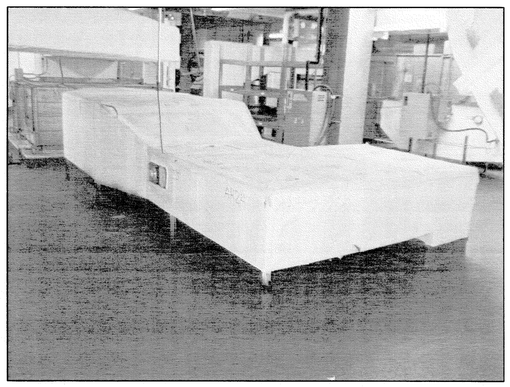

AHU-24 SUPPLY AIR DUCT ACROSS FLOOR AND DOWN TO SPACE BELOW

SCALE: NONE

P06 M201 PH101

THIS DRAWING CREATED ON AUTOCAD 2011 AND WILL BE REVISED ONLY ON AUTOCAD 2011 SYSTEM. FILE: 79K39690-PH-101.DWG

PH-101

SYM	ZONE	DESCRIPTION	DATE	APPROVED
		REVISIONS		

JOHNSON, LEVINSON RAGAN, DAVILA, INC. CONSULTING ENGINEERS
1450 Centrepark Boulevard, Suite 350 West Palm Beach, Florida 33401 (561) 689-2303 (561) 689-2302 Fax www.jldinc.com
Certification Number 6659

SIGNATURES		DATE
DRAWN	K. GOMEZ	6/13/13
CHECKED	T. FEAGANS	6/13/13
SUBMITTED: ANDR/DIG OF RECORD	MICHAEL D. DAVILA	6/13/13
ST OF LICENSURE:	FL	
LICENSE NO:	36066	
APPROVED: AE DEPT. HEAD-	T. FEAGANS	6/13/13
NASA SYS/LDE-	S. MEHTA	6/17/13

NATIONAL AERONAUTICS AND SPACE ADMINISTRATION
JOHN F. KENNEDY SPACE CENTER, NASA
KENNEDY SPACE CENTER, FLORIDA

AIR HANDLERS UPGRADES
BOOSTER FABRICATION FACILITY, BFF

AHU EXISTING CONDITIONS PHOTOGRAPHS

FILE. NO.	SIZE	DWG. NO.	REV
	F	79K39690	
PROJ. NO. 98889.2a		SHEET 25	

KSC FORM 1-11 (3/76)(C/G 3/94)

NOTICE: When Government drawings, specifications, or other data are used for any purpose other than in connection with a definitely related Government procurement operation, the United States Government thereby incurs no responsibility nor obligation whatsoever; and the fact that the Government may have formulated, furnished, or in any way supplied the said drawings, specifications or other data is not to be regarded by implication or otherwise as in any manner licensing the holder or any other person or corporation, or conveying any rights or permission to manufacture, use, or sell any patented invention that may in any way be related thereto.

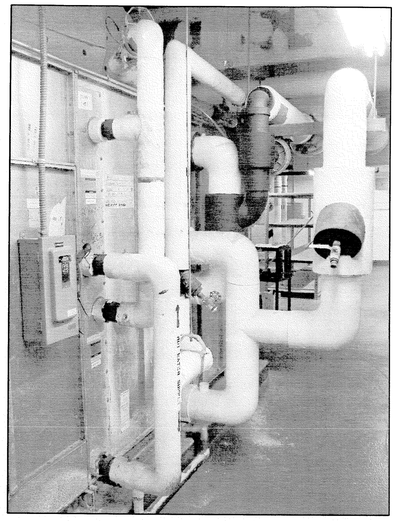

AHU-25 CHW AND HW PIPE DROPS TO DUAL COOLING AND HEATING COILS

SCALE: NONE

P07 M202 PH102

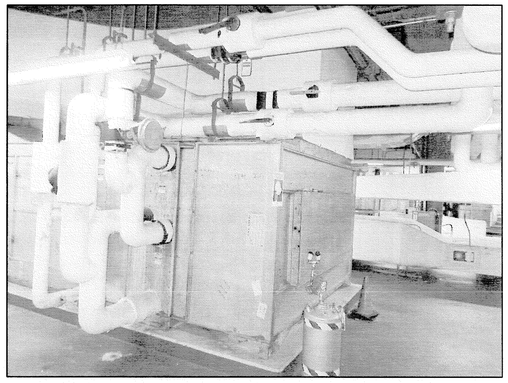

AHU-26 CHW AND HW BRANCH PIPES AND DROPS TO COOLING AND HEATING COILS

SCALE: NONE

P08 M202 PH102

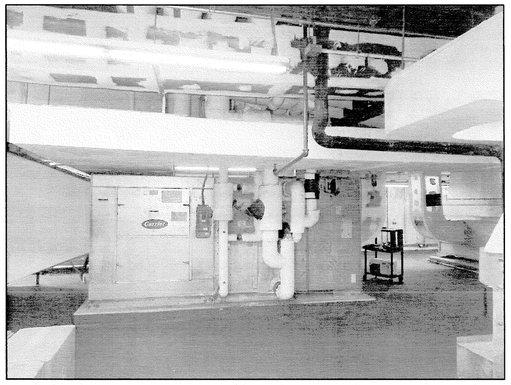

AHU-30 PIPE DROPS AND MINIMAL EXISTING DUCT CLEARANCES ABOVE UNIT

SCALE: NONE

P09 M202 PH102

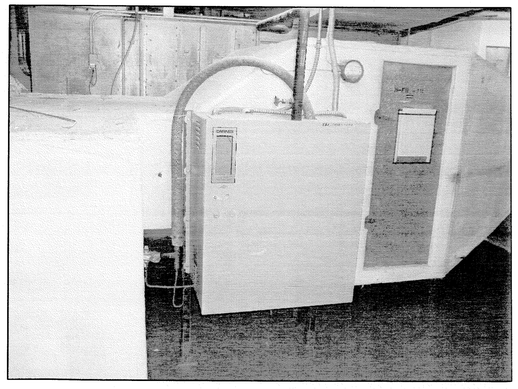

TYPICAL HUMIDIFIER TO BE DEMOLISHED AND DUCT PATCHED AND SEALED

SCALE: NONE

P10 M201 PH102

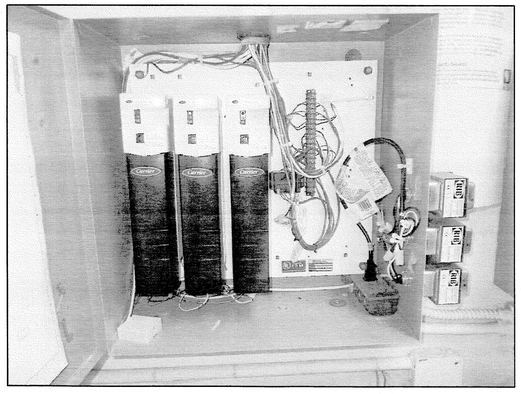

INSIDE VIEW OF A TYPICAL AHU CONTROL PANEL

SCALE: NONE

P11 M201 PH102

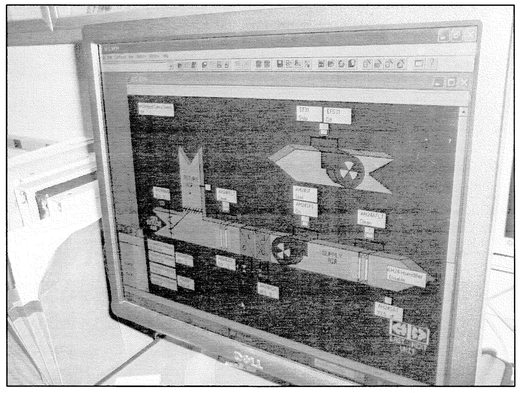

EXISTING SCREEN SHOT OF AN AHU GRAPHICS IN THE CONTROL ROOM

SCALE: NONE

P12 PH102 PH102

THIS DRAWING CREATED ON AUTOCAD 2011 AND WILL BE REVISED ONLY ON AUTOCAD 2011 SYSTEM. FILE: 79K39690-PH-102.DWG

PH-102

SYM	ZONE	DESCRIPTION	DATE	APPROVED
		REVISIONS		

JOHNSON, LEVINSON RAGAN, DAVILA, INC. CONSULTING ENGINEERS
1450 Centrepark Boulevard, Suite 350 West Palm Beach, Florida 33401 (561) 689.2303 • (561) 689.2302 Fax www.jldlec.com
Certification Number 6039

SIGNATURES		DATE
DRAWN	K. GOMEZ	6/13/13
CHECKED	T. FEAGANS	6/13/13
SUBMITTED: ARCH/ENG OF RECORD	MICHAEL D. DAVILA	6/13/13
ST OF LICENSURE:	FL	
LICENSE NO:	36066	
APPROVED: AE DEPT HEAD	T. FEAGANS	6/13/13
NASA SYS/LDE	S. MEHTA	6/17/13

NATIONAL AERONAUTICS AND SPACE ADMINISTRATION
JOHN F. KENNEDY SPACE CENTER, NASA
KENNEDY SPACE CENTER, FLORIDA

AIR HANDLERS UPGRADES
BOOSTER FABRICATION FACILITY, BFF

AHU EXISTING CONDITIONS PHOTOGRAPHS

FILE. NO.	SIZE	DWG. NO.	REV
	F	79K39690	
PROJ. NO. 98889.2a		SHEET 26	

KSC FORM 1-11 (3/76)(C/G 3/94)

NOTICE: When Government drawings, specifications, or other data are used for any purpose other than in connection with a definitely related Government procurement operation, the United States Government thereby incurs no responsibility nor obligation whatsoever; and the fact that the Government may have formulated, furnished, or in any way supplied the said drawings, specifications or other data is not to be regarded by implication or otherwise as in any manner licensing the holder or any other person or corporation, or conveying any rights or permission to manufacture, use, or sell any patented invention that may in any way be related thereto.

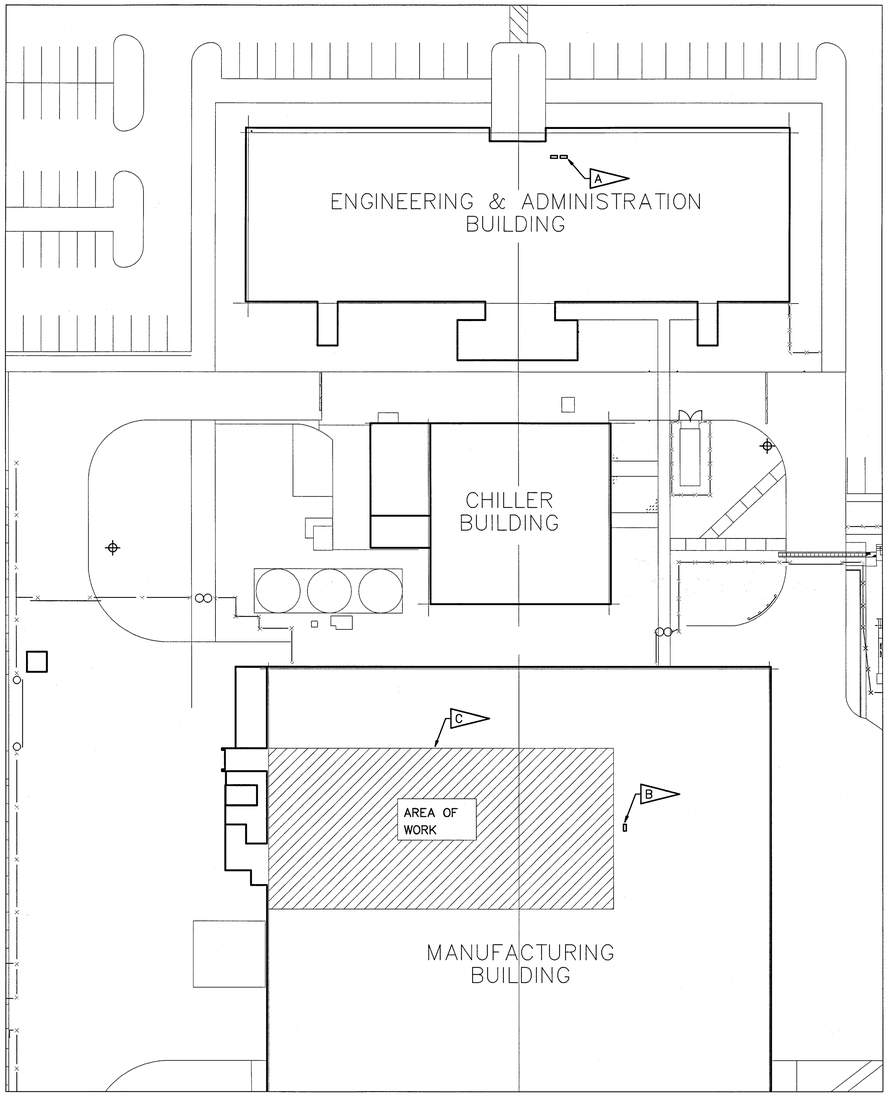

FIRE ALARM SITE PLAN

SCALE: 1/32" = 1'-0"

N

SPECIFIC NOTES:

A — BOOSTER FABRICATION FACILITY AREA FACP.

B — MANUFACTURING BUILDING FACP (SIEMENS FIRE FINDER) ON FIRST FLOOR.

C — AREA OF WORK IS ON THE MEZZANINE, BETWEEN FLOORS 1 AND 2.

FIRE ALARM LEGEND

AFF	ABOVE FINISHED FLOOR
AHU	AIR HANDLING UNIT
BLDG	BUILDING
C	CONDUIT
CZ	CONTROL RELAY ADDRESSABLE MODULE
CFMS	CENTRAL FIRE MONITORING STATION
FAAP	FIRE ALARM ANNUNCIATOR PANEL
FACP	FIRE ALARM CONTROL PANEL
FAS	FIRE ALARM SYSTEM
FATC	FIRE ALARM TERMINAL CABINET
GFE	GOVERNMENT FURNISHED EQUIPMENT
HAD	HEAT ACTUATED DETECTOR
MZAM, MZ	MONITOR ZONE ADDRESSIBLE MODULE
NIC	NOT IN CONTRACT
SZAM	SIGNAL ZONE ADDRESSIBLE MODULE
TYP.	TYPICAL
UNO	UNLESS NOTED OTHERWISE
ZAM	ZONE ADDRESSIBLE MODULE
$	SWITCH – SINGLE POLE
F	EXISTING COMBINATION FIRE HORN/STROBE
F	EXISTING FIRE ALARM STROBE LIGHT
F	EXISTING FIRE ALARM BELL
F	EXISTING FIRE ALARM HORN
F	EXISTING MANUAL PULL STATION
ASDS	EXISTING AIR SAMPLING DETECTION SYSTEM PANEL
F	EXISTING FIRE ALARM CONTROL PANEL (FACP)
FATC	EXISTING FIRE ALARM TERMINAL CABINET
FAAP, A	EXISTING FIRE ALARM ANNUNCIATOR PANEL
ZAM	EXISTING FIRE ALARM ZAM CABINET
NAC	EXISTING NOTIFICATION APPLIANCE CABINET
P	EXISTING PHOTOELECTRIC SMOKE DETECTOR
P X	EXISTING PHOTOELECTRIC DUCT SMOKE DETECTOR (S = SUPPLY; R = RETURN)
RT	EXISTING REMOTE DUCT DETECTOR TEST SWITCH/LED
	EXISTING HEAT ACTUATED DETECTOR TO BE REMOVED
———	NEW
- - - -	EXISTING
R	EXISTING CONTROL RELAY
(X)	X = QUANTITY OF DEVICES

PHASING NOTE

THIS PROJECT SHALL BE PERFORMED IN PHASES TO ALLOW FOR CONTINUED USE AND OCCUPANCY OF PORTIONS OF THE BUILDING DURING CONSTRUCTION. WORK SHALL BE EXECUTED IN A MANNER THAT MINIMIZES THE IMPACT TO THE BUILDING OCCUPANTS. SYSTEM WIDE OUTAGES AFFECTING THE ENTIRE FACILITY SHALL BE PERFORMED DURING PERIODS THE BUILDING IS NORMALLY UNOCCUPIED (SECOND SHIFT, WEEKENDS, HOLIDAYS). WORK AFFECTING ONLY A PORTION OF THE FACILITY THAT REQUIRES A LOCALIZED OUTAGE SHALL BE PERFORMED ON NOT LESS THAN A DOUBLE SHIFT BASIS TO REDUCE THE OUTAGE DURATION. REFER TO 'V' SERIES SHEETS AND THE PROJECT SPECIFICATIONS FOR ADDITIONAL REQUIREMENTS.

GENERAL NOTES

1. THE CONTRACTOR SHALL BE RESPONSIBLE FOR MEANS AND METHODS OF DEMOLITION AND INSTALLATION OF NEW WORK REQUIRED WITHIN THE PARAMETERS OF EXISTING BUILDING CONSTRUCTION. ALL EXISTING BUILDING FINISHES, FURNITURE, AND EQUIPMENT DAMAGED DURING CONSTRUCTION SHALL BE REPAIRED AND/OR REPLACED TO THE CONDITION THAT EXISTED PRIOR TO CONSTRUCTION OR BETTER. THIS REQUIREMENT APPLIES TO THE INTERIOR AND EXTERIOR OF ALL BUILDINGS INCLUDING ALL SITE RELATED AMENITIES SUCH AS, BUT NOT LIMITED TO LANDSCAPING, IRRIGATION, UTILITIES, ROADS, DRIVES, SIDEWALKS, COVERED WALKWAYS, LIGHTING, MECHANICAL EQUIPMENT, DOORS, WINDOWS, ETC.
2. PRIOR TO BEGINNING WORK, ALL ELECTRICAL EQUIPMENT AND SYSTEMS TO BE REUSED BY THE PROJECT (I.E. ASDS/VESDA, FLOW SWITCHES, PRESSURE SWITCHES, TAMPER SWITCHES, ETC.) SHALL BE OPERATED BY ISC PERSONNEL IN THE PRESENCE OF REPRESENTATIVES OF THE CONTRACTOR AND THE CONTRACTING OFFICER IN ORDER TO ESTABLISH THAT ALL SYSTEMS ARE IN PROPER WORKING ORDER AT THE START OF THE PROJECT. UPON COMPLETION OF THE ABOVE TEST, THE CONTRACTOR SHALL SUBMIT A DETAILED LISTING INDICATING ANY ITEMS NOTES WHICH ARE NOT IN FULLY OPERATIONAL CONDITION. THIS LISTING SHALL BE SIGNED BY ALL PARTIES PRESENT AT THE TEST. COMMENCEMENT OF WORK PRIOR TO THE ABOVE SHALL CONSTITUTE ACCEPTANCE OF OF ALL SYSTEMS BY THE CONTRACTOR IN FULLY OPERATIONAL CONDITION. THE CONTRACTOR SHALL HAVE ALL ELECTRICAL SYSTEMS BACK IN WORKING ORDER PRIOR TO SUBMITTAL COMPLETION OF THE PROJECT.
3. THE MIGRATION OF DUST, TOXIC SUBSTANCES, AND/OR DEBRIS FROM DEMOLITION AND/OR NEW CONSTRUCTION SHALL NOT BE ALLOWED INTO ANY ADJACENT AREAS THAT ARE BEING OCCUPIED. THE CONTRACTOR SHALL ERECT ALL DUST PARTITIONS, BARRIERS, SAFETY NETTING, ETC. AS REQUIRED TO SEPARATE AREAS OF CONSTRUCTION FROM ADJACENT OCCUPIED AREAS.
4. THE CONTRACTOR SHALL BE RESPONSIBLE FOR COMPLYING WITH CURRENT OWNER SAFETY REQUIREMENTS, SEE SPECIFICATIONS.
5. REPLACEMENT MATERIALS, FINISHES, EQUIPMENT, ETC. THAT ARE PROVIDED DUE TO DAMAGE OF SAME SHALL MATCH EXISTING WITH RESPECT TO COLOR, TEXTURE, FINISH, ETC. IN ORDER TO BE COMPATIBLE WITH NON-DAMAGED MATERIALS IN THE SAME SPACE.
6. THE CONTRACTOR SHALL BE RESPONSIBLE FOR MAINTAINING EMERGENCY MEANS OF EGRESS AND RESCUE THROUGH THE ENTIRE FACILITY WHEN OCCUPIED.
7. ALL EXIT AND EMERGENCY LIGHTING SHALL REMAIN OPERATIONAL WHEN THE BUILDING IS OCCUPIED.
8. EXISTING FIRE SPRINKLER HEADS SHALL NOT BE COVERED DURING CONSTRUCTION.
9. THE STRUCTURAL INTEGRITY OF ALL EXISTING CONSTRUCTION SHALL BE MAINTAINED AT ALL TIMES.
10. THESE DRAWINGS ARE INTENDED TO SHOW THE GENERAL ARRANGEMENT OF EQUIPMENT ONLY AND MAY NOT INDICATE EVERY OFFSET, BEND, FITTING OR MODIFICATION OF MATERIALS REQUIRED FOR INSTALLATION.
11. THE EXACT EQUIPMENT SIZE, CONFIGURATION, WORKING CLEARANCE, AND ELECTRICAL POINTS OF CONNECTION TO EQUIPMENT VARY BY MANUFACTURER, THE COORDINATION OF WHICH SHALL BE THE EXCLUSIVE RESPONSIBILITY OF THE CONTRACTOR. THE CONTRACTOR SHALL SUBMIT EQUIPMENT SHOP/COORDINATION DRAWINGS INDICATING THE ACTUAL SIZE AND CONFIGURATION OF PROPOSED EQUIPMENT DRAWN TO SCALE INCLUDING THE MANUFACTURER'S RECOMMENDED WORKING CLEARANCE AND MECHANICAL AND ELECTRICAL INTERFACE REQUIREMENTS.
12. CONTRACTOR SHALL COORDINATE WITH COTR/CONTRACTING OFFICER "SAFING" OF ALL FIRE ALARM SYSTEM DEVICES BY BASE OPERATIONS AND SUPPORT CONTRACTOR/PROTECTIVE SYSTEMS PERSONNEL. EXISTING SYSTEM SHALL NOT BE TURNED OFF OR MODIFIED WITHOUT A WRITTEN APPROVAL.
13. RISER DIAGRAMS AND FLOOR PLANS REQUIREMENTS SHALL BE CONSIDERED COMPLEMENTARY, IN THAT WORK OR FEATURES CALLED FOR OR REQUIRED BY ANY ONE, SHALL APPLY TO ALL.

GRAPHIC SCALE

0' 16' 32' 64'

SCALE IN FEET
1/32" = 1'-0"

THIS DRAWING CREATED ON AUTOCAD 2011 AND WILL BE REVISED ONLY ON AUTOCAD 2011 SYSTEM. FILE: 79K39690-FA-001.DWG

FA-001

SYM	ZONE	DESCRIPTION	DATE	APPROVED
		REVISIONS		

JOHNSON, LEVINSON RAGAN, DAVILA, INC. CONSULTING ENGINEERS
1450 Centrepark Boulevard, Suite 350 West Palm Beach, Florida 33401 (561) 689-2303 • (561) 689-2302 Fax www.jldlic.com
Certification Number 6039

SIGNATURES		DATE
DRAWN	P. PALOMINO	6/13/13
CHECKED	C. GABLEMAN	6/13/13
SUBMITTED: ARCH/ENG OF RECORD	C. Gableman CHARLES C. GABLEMAN	6-13-13
ST OF LICENSURE: FL LICENSE NO: 51936		
APPROVED:	H. Ragan AE DEPT HEAD H. RAGAN	6/19/13
	NASA SYS/LDE- S. MEHTA	6/19/13

NATIONAL AERONAUTICS AND SPACE ADMINISTRATION
JOHN F. KENNEDY SPACE CENTER, NASA
KENNEDY SPACE CENTER, FLORIDA

AIR HANDLERS UPGRADES
BOOSTER FABRICATION FACILITY, BFF

FIRE ALARM SITE PLAN, LEGEND AND GENERAL NOTES

FILE. NO.	SIZE	DWG. NO.	REV
	F	79K39690	
PROJ. NO. 98889.2a		SHEET 27	

KSC FORM 1-11 (3/76)(C/G 3/94)

NOTICE: When Government drawings, specifications, or other data are used for any purpose other than in connection with a definitely related Government procurement operation, the United States Government thereby incurs no responsibility nor obligation whatsoever; and the fact that the Government may have formulated, furnished, or in any way supplied the said drawings, specifications or other data is not to be regarded by implication or otherwise as in any manner licensing the holder or any other person or corporation, or conveying any rights or permission to manufacture, use, or sell any patented invention that may in any way be related thereto.

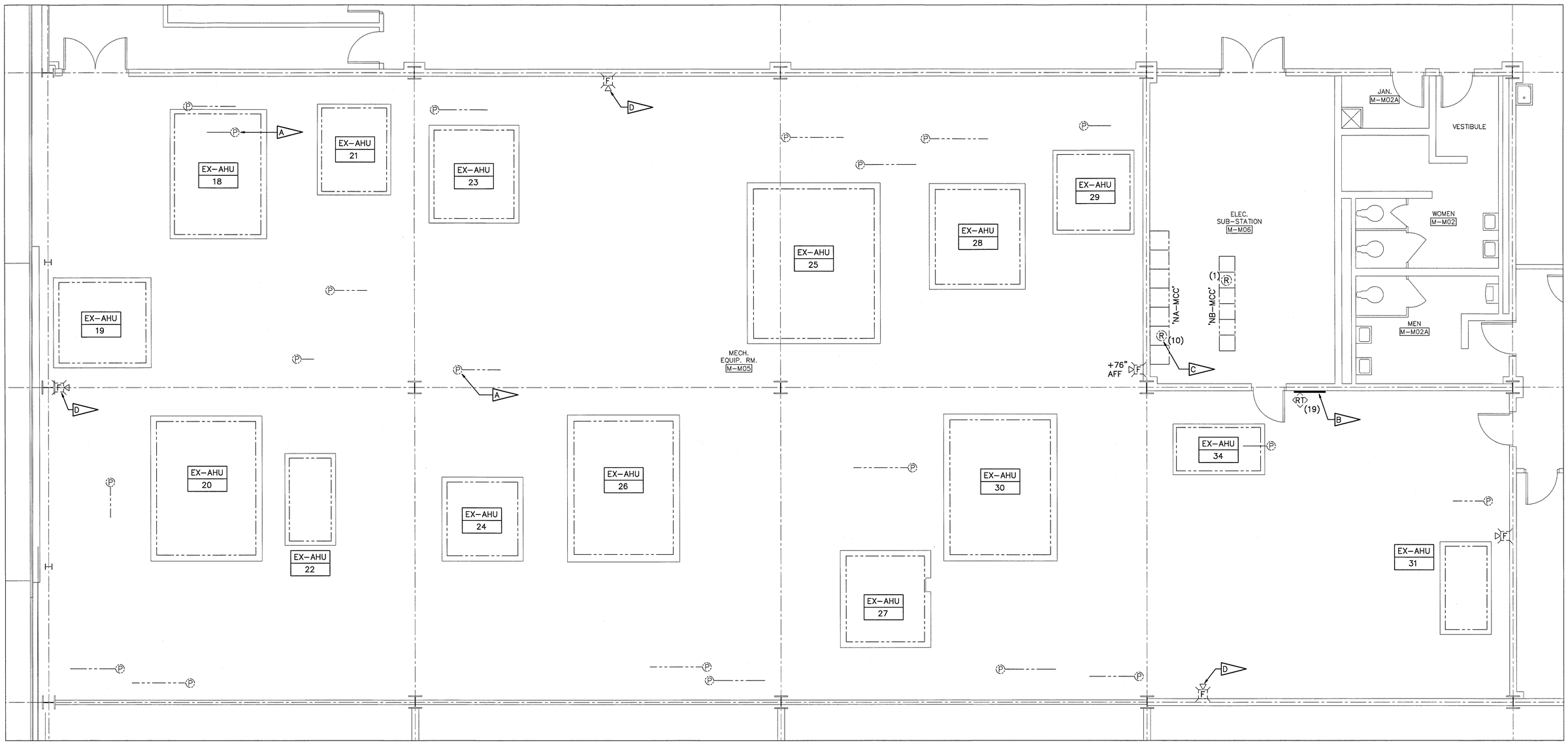

MEZZANINE SYSTEMS FLOOR PLAN - DEMOLITION

SCALE: 1/4"=1'-0"

N

SPECIFIC NOTES:

A. EXISTING DUCT SMOKE DETECTOR TO REMAIN AS IS. CONTRACTOR SHALL CONTACT BASE OPERATIONS FIRE ALARM SHOP TO SAFE DEVICES PRIOR TO CONSTRUCTION. FOLLOWING CONSTRUCTION, CONTRACTOR SHALL NOTIFY SHOP TO REACTIVATE DEVICES. DEVICES AND ASSOCIATED SHUT-DOWN RELAY AND REMOTE TEST SHALL BE TESTED PER SPECIFICATIONS.

B. INDICATES (19) DUCT SMOKE DETECTOR REMOTE TEST SWITCHES EXISTING TO REMAIN.

C. EXISTING 'AHU' SHUTDOWN RELAY ABOVE 'MCC' TO REMAIN (TYP).

D. EXISTING FIRE ALARM HORN DEVICE TO REMAIN (TYP).

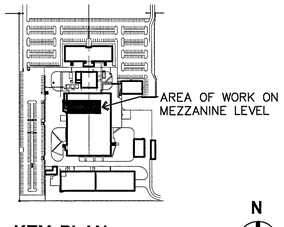

KEY PLAN

N

GRAPHIC SCALE
0' 2' 4' 8'
SCALE IN FEET
1/4" = 1'-0"

THIS DRAWING CREATED ON AUTOCAD 2011 AND WILL BE REVISED ONLY ON AUTOCAD 2011 SYSTEM. FILE: 79K39690-FA-100.DWG

FA-100

SYM	ZONE	DESCRIPTION	DATE	APPROVED
		REVISIONS		

JOHNSON, LEVINSON RAGAN, DAVILA, INC. CONSULTING ENGINEERS
1450 Centrepark Boulevard, Suite 350 West Palm Beach, Florida 33401 (561) 689-2303 • (561) 689-2302 Fax www.jldinc.com
Certification Number 6059

SIGNATURES		DATE
DRAWN	P. PALOMINO	6/13/13
CHECKED	C. GABLEMAN	6/13/13
SUBMITTED: ARCH/ENG OF RECORD	C. Gableman CHARLES C. GABLEMAN	6.13.13
ST OF LICENSURE: FL LICENSE NO: 51936		
APPROVED: AE DEPT HEAD: H. RAGAN	H. Ragan	6/13/13
NASA SYS/LDE- S. MEHTA	Sunita Mehta	6/17/13

NATIONAL AERONAUTICS AND SPACE ADMINISTRATION
JOHN F. KENNEDY SPACE CENTER, NASA
KENNEDY SPACE CENTER, FLORIDA

AIR HANDLERS UPGRADES
BOOSTER FABRICATION FACILITY, BFF

MEZZANINE FIRE ALARM FLOOR PLAN - DEMOLITION

FILE. NO.	SIZE	DWG. NO.	REV
	F	79K39690	
PROJ. NO. 98889.2a		SHEET 28	

KSC FORM 1-11 (3/76)(C/G 3/94)

NOTICE: When Government drawings, specifications, or other data are used for any purpose other than in connection with a definitely related Government procurement operation, the United States Government thereby incurs no responsibility nor obligation whatsoever; and the fact that the Government may have formulated, furnished, or in any way supplied the said drawings, specifications or other data is not to be regarded by implication or otherwise as in any manner licensing the holder or any other person or corporation, or conveying any rights or permission to manufacture, use, or sell any patented invention that may in any way be related thereto.

ELECTRICAL LEGEND

ACM	ASBESTOS CONTAINING MATERIAL
A.F.F.	ABOVE FINISHED FLOOR
A.F.G.	ABOVE FINISHED GRADE
AUX	AUXILIARY
AWG	AMERICAN WIRE GAUGE
C	CONDUIT
CT	CONTACTOR
COTR	CONTRACTING OFFICER TECHNICAL REPRESENTATIVE
CKT	CIRCUIT
COMM	COMMUNICATIONS
CT	CURRENT TRANSFORMER
CU	COPPER
DB	DIRECT BURIED
DISC, DS	DISCONNECT
DISTRIB.	DISTRIBUTION
DMP	DIGITAL METERING PACKAGE
EO	ELECTRICALLY OPERATED (BREAKER)
EXIST.	EXISTING
FDR	FEEDER
FF	FINISHED FLOOR
FMS	FACILITY MANAGEMENT SYSTEM
G, GND	GROUND
GALV	GALVANIZED
GFE	GOVERNMENT FURNISHED EQUIPMENT
GFI	GROUND FAULT INTERRUPT
GRS	GALVANIZED RIGID STEEL
HZ	HERTZ (CYCLES PER SECOND)
KCMIL,MCM	THOUSAND CIRCULAR MILS
KV	KILOVOLTS
KVA	KILOVOLT AMPERES
LB	FITTING "L"-BACK
LBS	LOAD BREAK SWITCH
LSI	LONG TIME, SHORT TIME, INSTANTANEOUS
MCB	MAIN CIRCUIT BREAKER
MH	MANHOLE
MO	MANUALLY OPERATED (BREAKER)
N	NEUTRAL
N.C.	NORMAL CLOSED
NF	NON-FUSED
N1	INDICATES 'NEMA SIZE ONE' STARTER
N.O.	NORMALLY OPEN
NTS	NOT TO SCALE
OCB	OIL CIRCUIT BREAKER
OCP	OVERCURRENT PROTECTION
PMT	PAD MOUNTED TRANSFORMER
PNL	PANEL BOARD
PT	POTENTIAL TRANSFORMER
PVC	POLYVINYL CHLORIDE
SCA	SHORT CIRCUIT AMP
S.P.D.T.	SINGLE POLE, DOUBLE THROW
SS	SUBSTATION
SP	SPARE
SPD-X	SURGE PROTECTION DRIVE (X = LEVEL OF PROTECTION)
SWGR	SWITCH GEAR
TTB	TELEPHONE TERMINAL BOARD
TTC	TELEPHONE TERMINAL CABINET
TYP.	TYPICAL

TX/TRANSF	TRANSFORMER
USS	UNIT SUBSTATION
W/	WITH
W/O	WITH OUT
WP	WEATHERPROOF
VFD	VARIABLE FREQUENCY DRIVE
VFI	VACUUM FAULT INTERUPTER
XFMR	TRANSFORMER
	CONDUIT ROUTED EXPOSED
	CONDUIT ROUTED UNDERGROUND
	EXISTING
	NEW
	SPLICE NEW TO EXISTING
	PULLBACK AND REMOVE FEEDER
	EXISTING TO BE DEMOLISHED
	ELBOW TERMINATION, OR DRAW-OUT GEAR
	SWITCHGEAR BREAKER
NO	DISCONNECT SWITCH (NORMALLY OPEN)
	DISCONNECT SWITCH (NORMALLY CLOSED)
	FUSED SWITCH
	FUSE
-X---X-	EXISTING FENCE
	BATTERY POWERED EMERGENCY LIGHT
	FLUORESCENT INDUSTRIAL STRIP
	FLUORESCENT INDUSTRIAL STRIP – EMERGENCY
$	SWITCH – SINGLE POLE
$3	3-WAY SWITCH
$4	4-WAY SWITCH
$P	SWITCH WITH PILOT LIGHT
OS	OCCUPANCY SENSOR
	TELECOMMUNICATIONS OUTLET (1 DATA, 1 BLANK – FUTURE FIBER PORT)
	SINGLE RECEPTACLE
	DUPLEX RECEPTACLE
	DOUBLE DUPLEX OR QUAD TYPE RECEPTACLE
J J	JUNCTION BOX – WALL OR CEILING MOUNTED
	PANELBOARD/EQUIPMENT – 120/208V
	PANELBOARD/EQUIPMENT – 277/480V
	DISCONNECT SWITCH
	COMBINATION MOTOR STARTER OR VARIABLE VARIABLE FREQUENCY DRIVE
	NORMALLY OPEN CONTACT (NO)
	NORMALLY CLOSED CONTACT (NC)
	NORMALLY OPEN CONTACTOR

DB-1,3,5	HOMERUN (3/4"C) SHORT HASH MARKS INDICATE PHASE WIRES (#12AWG); LONG HASH MARKS INDICATE NEUTRAL WIRES (#12 AWG); DB INDICATES THE PANEL, -1,2,3 INDICATE THE PANEL CIRCUITS. WIRE SIZES OTHER THAN #12 AND CONDUIT OTHER THAN 3/4"C SHALL BE CALLED OUT. PROVIDE GROUND IN ALL RUNS PER N.E.C. TABLE 250-95. NO HASH MARKS INDICATE 2#12, 1#12G, 3/4"C
	CONDUIT AND CONDUCTOR NOTE, SEE CONDUIT ROUTING SCHEDULE. FOR RESPECTIVE BLDG.; (ALPHA = EXISTING NUMERIC = NEW SP = SPARE
	ELECTRICAL GROUND
	COILED UP CONDUCTORS, NOT ELECTRICALLY POWERED
X	MOTOR (X = HORSEPOWER)
	TRANSFORMER
	TRANSFORMER
R	AUXILLARY REMOTE CONTROL OR MONITORING RELAY
	MOLDED CASE CIRCUIT BREAKER
	DRAW-OUT CIRCUIT BREAKER
ST	SHUNT TRIP BREAKER
XXX / YYY	BREAKER AMPACITY RATING (XXX = TRIP UNIT RATING, YYY = BREAKER FRAME SIZE)
X / X Y	PICTURE BALL OUT, ARROW INDICATES DIRECTION OF VIEW.
X	SPECIFIC NOTE

GENERAL ELECTRICAL NOTES

1. THE CONTRACT DOCUMENTS MAY NOT REFLECT ALL EXISTING SERVICES OR SHOW THEM IN THEIR EXACT OR EXISTING LOCATIONS ABOVE OR BELOW GRADE. ANY SERVICE THAT IS INTERRUPTED BY THE CONTRACTOR WITHIN OR OUTSIDE OF THE DESIGNATED LIMITS, ABOVE OR BELOW GRADE, WHETHER SHOWN OR NOT SHOWN ON THE CONTRACT DOCUMENTS, SHALL BE IMMEDIATELY REPAIRED BY HIM AT HIS EXPENSE WITH NO OBLIGATION TO THE OWNER. ALL REPAIRS SHALL BE APPROVED BY THE ARCHITECT OR ENGINEER PRIOR TO ACCEPTANCE OF THE REPAIR.
2. PRIOR TO BEGINNING WORK, ALL ELECTRICAL EQUIPMENT AND SYSTEMS SHALL BE OPERATED IN THE PRESENCE OF REPRESENTATIVES OF THE CONTRACTOR AND THE CONTRACTING OFFICER. IN ORDER TO ESTABLISH THAT ALL SYSTEMS ARE IN PROPER WORKING ORDER AT THE START OF THE PROJECT. UPON COMPLETION OF THE ABOVE TEST, THE CONTRACTOR SHALL SUBMIT A DETAILED LISTING INDICATING ANY ITEMS NOTED WHICH ARE NOT IN FULLY OPERATIONAL CONDITION. THIS LISTING SHALL BE SIGNED BY ALL PARTIES PRESENT AT THE TEST. COMMENCEMENT OF WORK PRIOR TO THE ABOVE SHALL CONSTITUTE ACCEPTANCE OF ALL SYSTEMS BY THE CONTRACTOR IN FULLY OPERATIONAL CONDITION. THE CONTRACTOR SHALL HAVE ALL ELECTRICAL SYSTEMS BACK IN WORKING ORDER PRIOR TO SUBSTANTIAL COMPLETION OF THE PROJECT.
3. COORDINATE PHASING OF ALL WORK IN ACCORDANCE WITH WORK SEQUENCE AS OUTLINED IN THE "RECOMMENDED SEQUENCE OF CONSTRUCTION", ON THE 'V' SERIES DRAWINGS.
4. PVC CONDUIT SHALL NOT BE ALLOWED INSIDE BUILDINGS. TRANSITION TO METALLIC CONDUIT IMMEDIATELY UPON ENTRANCE INSIDE BUILDING.
5. ELEVATIONS GIVEN: BE = BOTTOM ELEVATION; TE = TOP ELEVATION; CE = CENTERLINE ELEVATION ARE APPROXIMATE, PROVIDED FOR THE CONTRACTORS CONVENIENCE, AND SHALL BE FIELD VERIFIED PRIOR TO FABRICATION OR INSTALLATION OF WORK.
6. THESE DRAWINGS ARE INTENDED TO SHOW THE GENERAL ARRANGEMENT OF EQUIPMENT ONLY AND MAY NOT INDICATE EVERY OFFSET, BEND, FITTING OR MODIFICATION OF MATERIALS REQUIRED FOR INSTALLATION.
7. THE EXACT EQUIPMENT SIZE, CONFIGURATION, MAINTENANCE SERVICE AREAS, AND ELECTRICAL POINTS OF CONNECTION TO EQUIPMENT VARY BY MANUFACTURER, THE COORDINATION OF WHICH SHALL BE THE EXCLUSIVE RESPONSIBILITY OF THE CONTRACTOR. THE LAYOUT SHOWN ON THE DRAWINGS IS BASED UPON THE REQUIREMENTS OF A PARTICULAR MANUFACTURER AS SELECTED BY THE ENGINEER AS THE BASIS OF DESIGN. THE CONTRACTOR SHALL SUBMIT EQUIPMENT COORDINATION DRAWINGS, PLANS AND ELEVATIONS, INDICATING THE ACTUAL SIZE AND CONFIGURATION OF PROPOSED EQUIPMENT DRAWN TO SCALE INCLUDING THE MANUFACTURER'S RECOMMENDED MAINTENANCE SERVICE AREAS AND MECHANICAL AND ELECTRICAL INTERFACE REQUIREMENTS INCLUDING ELECTRICAL CONNECTIONS AT THE TIME OF EQUIPMENT SHOP DRAWING SUBMITTAL.
8. MINIMUM TRADE SIZE CONDUIT PERMITTED SHALL BE 3/4" INCH UNLESS NOTED OTHERWISE.
9. ALL POWER CONDUCTOR METAL SHALL BE COPPER. ALL CONDUCTORS SHALL BE LABELED WITH SOURCE AND DESTINATION PER EA E-001 E-001
   1. 600 VOLT INSULATION TYPE THHN (90°C). (MINIMUM SIZE SHALL BE #12 AWG.) CONTRACTOR SHALL ADJUST WIRE AND CONDUIT SIZES IF OTHER INSULATION TYPES ARE USED.
10. ALL LIGHT SWITCHES AND DUPLEX RECEPTACLES SHALL BE RATED FOR 20 AMPERE AT 125/277 VOLTS A/C WIRING DEVICES. PROVIDE BARRIERS AT 277V SWITCHES WHERE REQUIRED BY N.E.C. ARTICLE 404-8(b).
11. COMMUNICATION CONDUITS ARE TO BE LONG RADIUS TYPE AND SHALL CONTAIN PULL WIRES. PROVIDE PLATES FOR ALL OUTLETS.
12. ALL CONDUITS SHALL HAVE A SEPERATE GREEN GROUND CONDUCTOR INSTALLED FOR GROUNDING.
13. ALL DISCONNECTS SWITCHES SHALL BE THE HEAVY DUTY TYPE.
14. ALL EMPTY CONDUITS SHALL CONTAIN 200 lb. PULL-LINE. ALL SPARE CONDUITS SHALL BE CAPPED ON EACH END AND LABELED TO IDENTIFY SOURCE OF EACH END.
15. EQUIPMENT INSTALLED WITHIN CONCEALED SPACES SHALL HAVE REASONABLE ACCESS PANELS PROVIDED NEARBY FOR INSPECTION, TESTING AND SERVICE CONSIDERATIONS.
16. ALL ELECTRICAL ENCLOSURES LOCATED OUTSIDE SHALL BE NEMA 4X-SS.
17. CONTRACTOR SHALL OBTAIN A TYPICAL PANELBOARD SCHEDULE FROM THE COTR PRIOR TO BEGINNING WORK. EACH PANELBOARDS'S SCHEDULE SHALL BE TYPEWRITTEN, INDICATING CONDUCTOR SIZES (PHASE, NEUTRAL, AND GROUND), BRANCH CIRCUIT DESCRIPTION, LOAD, CONDUIT SIZE AND BREAKER RATING.
18. ALL CIRCUIT BREAKER ENCLOUSURES, NEW OR EXISTING, WHICH SERVE FIRE ALARM, ASDS, OR OTHER SIMILAR EQUIPMENT SHALL BE PROVIDED WITH RED BREAKER LOCKING HARDWARE. ALL NEW PANELBOARDS INSTALLED UNDER THIS CONTRACT SHALL HAVE THE DEADFRONT AND COVER PAINTED RED. PROVIDE WITH NFPA REQUIRED LABELING.
19. PENETRATIONS THROUGH RATED WALLS SHALL BE PERFORMED IN SUCH A MANNER AS TO PRESERVE THE FIRE RATED INTEGRITY OF THE WALL, REFER TO DETAILS EB E-001 E-301 AND EC E-001 E-301 .
20. NASA PROPERTY TAG NUMBERS ON DEMOLISHED EQUIPMENT SHALL BE TURNED OVER TO COTR PRIOR TO DEMOLITION.
21. PROVIDE DUST CONTAINMENT PLAN FOR DEMOLITION INVOLVING CONCRETE (I.E. OIL CONTAINMENT CURBS). PLAN SHALL BE APPROVED BY COTR PRIOR TO DEMOLITION.
22. CONTRACTOR SHALL NOT CUT OR REMOVE ANY EXISTING STRUCTURAL BEAMS, FLOOR MEMBERS, ETC. VERIFY FLOOR LOADING OF ALL NEW EQUIPMENT PROVIDED UNDER THIS CONTRACT, TO CONFIRM ADEQUATE CAPACITY OF THE EXISTING FLOOR SLAB.

PHASING NOTE

THIS PROJECT SHALL BE PERFORMED IN PHASES TO ALLOW FOR CONTINUED USE AND OCCUPANCY OF PORTIONS OF THE BUILDING DURING CONSTRUCTION. WORK SHALL BE EXECUTED IN A MANNER THAT MINIMIZES THE IMPACT TO THE BUILDING OCCUPANTS. SYSTEM WIDE OUTAGES AFFECTING THE ENTIRE FACILITY SHALL BE PERFORMED DURING PERIODS THE BUILDING IS NORMALLY UNOCCUPIED (SECOND SHIFT, WEEKENDS, HOLIDAYS). WORK AFFECTING ONLY A PORTION OF THE FACILITY THAT REQUIRES A LOCALIZED OUTAGE SHALL BE PERFORMED ON NOT LESS THAN A DOUBLE SHIFT BASIS TO REDUCE THE OUTAGE DURATION. REFER TO 'V' SERIES SHEETS AND THE PROJECT SPECIFICATIONS FOR ADDITIONAL REQUIREMENTS.

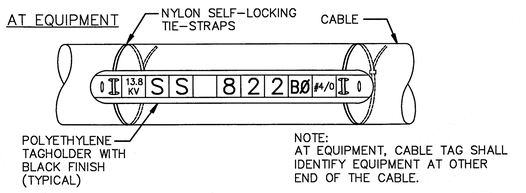

CIRCUIT IDENTIFICATION TAG DETAIL EA E-003 E-001

SCALE: NONE

THIS DRAWING CREATED ON AUTOCAD 2011 AND WILL BE REVISED ONLY ON AUTOCAD 2011 SYSTEM. FILE: 79K39690- E-001 .DWG

SYM	ZONE	DESCRIPTION	DATE	APPROVED
		REVISIONS		

JOHNSON, LEVINSON RAGAN, DAVILA, INC. CONSULTING ENGINEERS — 1450 Centrepark Boulevard, Suite 350, West Palm Beach, Florida 33401, (561) 689-2303 • (561) 689-2302 Fax, www.jldinc.com, Certification Number 6059

SIGNATURES		DATE
DRAWN	P. PALOMINO	6/13/13
CHECKED	C. GABLEMAN	6/13/13
SUBMITTED: ARCH/ENG OF RECORD	CHARLES C. GABLEMAN	6-13-13
ST OF LICENSURE: FL	LICENSE NO: 51936	
APPROVED: AE DEPT HEAD	H. RAGAN	6/13/13
NASA SYS/LDE-	S. MEHTA	6/17/13

NATIONAL AERONAUTICS AND SPACE ADMINISTRATION
JOHN F. KENNEDY SPACE CENTER, NASA
KENNEDY SPACE CENTER, FLORIDA

AIR HANDLERS UPGRADES
BOOSTER FABRICATION FACILITY, BFF

ELECTRICAL LEGEND AND GENERAL NOTES

E-001

FILE. NO.	SIZE	DWG. NO.	REV
	F	79K39690	
PROJ. NO. 98889.2a		SHEET 29	

KSC FORM 1-11 (3/76)(C/G 3/94)

NOTICE: When Government drawings, specifications, or other data are used for any purpose other than in connection with a definitely related Government procurement operation, the United States Government thereby incurs no responsibility nor obligation whatsoever; and the fact that the Government may have formulated, furnished, or in any way supplied the said drawings, specifications or other data is not to be regarded by implication or otherwise as in any manner licensing the holder or any other person or corporation, or conveying any rights or permission to manufacture, use, or sell any patented invention that may in any way be related thereto.

SPECIFIC NOTES:

A — TEMPORARY CHILLER ELECTRICAL CONNECTION VIA 'DSTC-1'.

B — OIL FILLED 15 KV SWITCHES 708 AND 709, WHICH SERVE SS-1113, TO REMAIN.

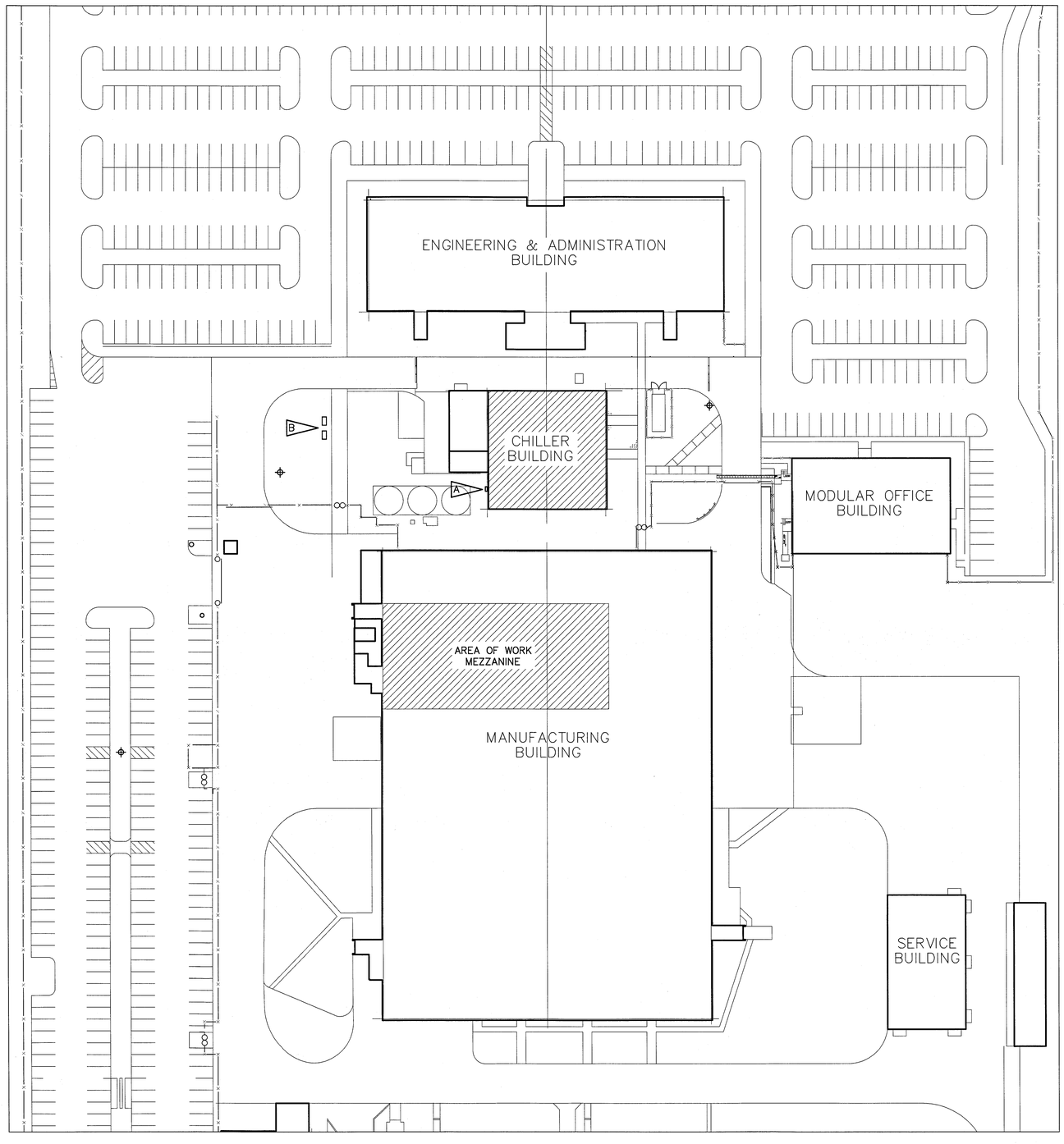

ELECTRICAL SITE PLAN

SCALE: 1" = 40'-0"

N

GRAPHIC SCALE

0' 20' 40' 80'

SCALE IN FEET 1" = 40'-0"

THIS DRAWING CREATED ON AUTOCAD 2011 AND WILL BE REVISED ONLY ON AUTOCAD 2011 SYSTEM. FILE: 79K39690- E-002 .DWG

E-002

SYM	ZONE	DESCRIPTION	DATE	APPROVED
		REVISIONS		

JOHNSON, LEVINSON RAGAN, DAVILA, INC. CONSULTING ENGINEERS
1450 Centrepark Boulevard, Suite 350 West Palm Beach, Florida 33401 (561) 689-2303 • (561) 689-2302 Fax www.jldinc.com
Certification Number 6059

SIGNATURES		DATE
DRAWN	P. PALOMINO	6/13/13
CHECKED	C. GABLEMAN	6/13/13
SUBMITTED: ARCHIVING OF RECORD	C. Gableman CHARLES C. GABLEMAN	6·13·13
ST OF LICENSURE: FL LICENSE NO: 51936		
APPROVED: AE DEPT HEAD H. RAGAN	H. Ragan	6/13/13
NASA SYS/LDE- S. MEHTA	Sharu Mehta	6/17/12

NATIONAL AERONAUTICS AND SPACE ADMINISTRATION
JOHN F. KENNEDY SPACE CENTER, NASA
KENNEDY SPACE CENTER, FLORIDA

AIR HANDLERS UPGRADES
BOOSTER FABRICATION FACILITY, BFF

ELECTRICAL SITE PLAN

FILE. NO.	SIZE	DWG. NO.	REV
	F	79K39690	
PROJ. NO. 98889.2a		SHEET 30	

KSC FORM 1-11 (3/76)(C/G 3/94)

NOTICE: When Government drawings, specifications, or other data are used for any purpose other than in connection with a definitely related Government procurement operation, the United States Government thereby incurs no responsibility nor obligation whatsoever; and the fact that the Government may have formulated, furnished, or in any way supplied the said drawings, specifications or other data is not to be regarded by implication or otherwise as in any manner licensing the holder or any other person or corporation, or conveying any rights or permission to manufacture, use, or sell any patented invention that may in any way be related thereto.

EXISTING WIRE AND CONDUIT ROUTING SCHEDULE

FEEDER	FROM	TO	CONDUIT	CONDUCTOR	NOTES
A	'NA-MCC-1B'	'M-AHU-18' DISC.	3/4"	3#10, 1#10G	NOTE #5
B	'M-AHU-18' DISCONNECT	AHU-18	3/4"	3#10, 1#10G	NOTE #1
C	'NA-MCC-1D'	'M-AHU-19' DISC.	3/4"	3#12, 1#12G	NOTE #5
D	'M-AHU-19' DISCONNECT	AHU-19	3/4"	3#12, 1#12G	NOTE #1
E	'NA-MCC-1F'	'M-AHU-25' DISC.	3/4"	3#8, 1#8G	NOTE #5
F	'M-AHU-25' DISCONNECT	AHU-25	3/4"	3#8, 1#8G	NOTE #1
G	'NA-MCC-1H'	'M-AHU-21' DISC.	3/4"	3#12, 1#12G	NOTE #5
H	'M-AHU-21' DISCONNECT	AHU-21	3/4"	3#12, 1#12G	NOTE #1
J	'NA-MCC-2B'	'M-AHU-22' DISC.	3/4"	3#8, 1#8G	NOTE #5
K	'M-AHU-22' DISCONNECT	AHU-22	3/4"	3#8, 1#8G	NOTE #1
L	'NA-MCC-2D'	'M-AHU-23' DISC.	3/4"	3#12, 1#12G	NOTE #5
M	'M-AHU-23' DISCONNECT	AHU-23	3/4"	3#12, 1#12G	NOTE #1
N	'NA-MCC-2F'	'M-AHU-24' DISC.	3/4"	3#10, 1#10G	NOTE #5
P	'M-AHU-24' DISCONNECT	AHU-24	3/4"	3#10, 1#10G	NOTE #1
R	'NA-MCC-2H'	'M-AHU-26' DISC.	3/4"	3#8, 1#8G	NOTE #5
S	'M-AHU-26' DISCONNECT	AHU-26	3/4"	3#8, 1#8G	NOTE #1
T	'NA-MCC-2M'	'M-AHU-27' DISC.	3/4"	3#10, 1#10G	NOTE #5
U	'M-AHU-27' DISCONNECT	AHU-27	3/4"	3#10, 1#10G	NOTE #1
V	'NA-MCC-3F'	'M-AHU-30' DISC.	3/4"	3#8, 1#8G	NOTE #5
W	'M-AHU-30' DISCONNECT	AHU-30	3/4"	3#8, 1#8G	NOTE #1
Y	'NB-MCC-1B'	'M-AHU-20' DISC.	3/4"	3#8, 1#8G	NOTE #5
Z	'M-AHU-20' DISCONNECT	AHU-20	3/4"	3#8, 1#8G	NOTE #1

CONDUIT ROUTING SCHEDULE NOTES

1. EXISTING CONDUIT AND CONDUCTORS TO BE REMOVED.
2. PROVIDE AND INSTALL CONDUCTORS IN EXISTING CONDUITS.
3. EXISTING TO REMAIN. SHOWN FOR REFERENCE.
4. PROVIDE AND INSTALL CONDUIT AND CONDUCTORS.
5. PORTION OF EXISTING CONDUIT TO BE REMOVED, CONDUCTORS TO BE PULLED BACK AND REUSED.
6. EXISTING CONDUCTORS TO BE REMOVED, EXISTING UNDERGROUND CONDUIT TO REMAIN AND BE REUSED.
7. PULL EXISTING CONDUCTORS IN NEW CONDUIT.

NEW WIRE AND CONDUIT ROUTING SCHEDULE

FEEDER	FROM	TO	CONDUIT	CONDUCTOR	NOTES
1	'NA-MCC-1B'	'M-AHU-18' DISC.	3/4"	3#10, 1#10G	NOTE #7
2	'M-AHU-18' DISCONNECT	AHU-18	3/4"	3#10, 1#10G	NOTE #4
3	'NA-MCC-1D'	'M-AHU-19' DISC.	3/4"	3#12, 1#12G	NOTE #7
4	'M-AHU-19' DISCONNECT	AHU-19	3/4"	3#12, 1#12G	NOTE #4
5	'NA-MCC-1F'	'M-AHU-25' DISC.	3/4"	3#8, 1#8G	NOTE #7
6	'M-AHU-25' DISCONNECT	AHU-25	3/4"	3#8, 1#8G	NOTE #4
7	'NA-MCC-1H'	'M-AHU-21' DISC.	3/4"	3#12, 1#12G	NOTE #7
8	'M-AHU-21' DISCONNECT	AHU-21	3/4"	3#12, 1#12G	NOTE #4
9	'NA-MCC-2B'	'M-AHU-22' DISC.	3/4"	3#8, 1#8G	NOTE #7
10	'M-AHU-22' DISCONNECT	AHU-22	3/4"	3#8, 1#8G	NOTE #4
11	'NA-MCC-2D'	'M-AHU-23' DISC.	3/4"	3#12, 1#12G	NOTE #7
12	'M-AHU-23' DISCONNECT	AHU-23	3/4"	3#12, 1#12G	NOTE #4
13	'NA-MCC-2F'	'M-AHU-24' DISC.	3/4"	3#10, 1#10G	NOTE #7
14	'M-AHU-24' DISCONNECT	AHU-24	3/4"	3#10, 1#10G	NOTE #4
15	'NA-MCC-2H'	'M-AHU-26' DISC.	3/4"	3#8, 1#8G	NOTE #7
16	'M-AHU-26' DISCONNECT	AHU-26	3/4"	3#8, 1#8G	NOTE #4
17	'NA-MCC-2M'	'M-AHU-27' DISC.	3/4"	3#10, 1#10G	NOTE #7
18	'M-AHU-27' DISCONNECT	AHU-27	3/4"	3#10, 1#10G	NOTE #4
19	'NA-MCC-3F'	'M-AHU-30' DISC.	3/4"	3#8, 1#8G	NOTE #7
20	'M-AHU-30' DISCONNECT	AHU-30	3/4"	3#8, 1#8G	NOTE #4
21	'NB-MCC-1B'	'M-AHU-20' DISC.	3/4"	3#8, 1#8G	NOTE #7
22	'M-AHU-20' DISCONNECT	AHU-20	3/4"	3#8, 1#8G	NOTE #4

DISCONNECT SWITCH SCHEDULE

NO.	SWITCH/FUSE	VOLTAGE	LOCATION	CIR NO.	CONDUIT/CONDUCTOR	ENCLOSURE
'DS-AHU-18'	30A/3P/30ADEF	480V, 3ø	MECH. EQ. RM. M-M05	NA-MCC-1B	SEE FDR. #1, #2 – CONDUIT SCHED.	NEMA 12
'DS-AHU-19'	30A/3P/20ADEF	480V, 3ø	MECH. EQ. RM. M-M05	NA-MCC-1D	SEE FDR. #3, #4 – CONDUIT SCHED.	NEMA 12
'DS-AHU-20'	60A/3P/50ADEF	480V, 3ø	MECH. EQ. RM. M-M05	NB-MCC-1B	SEE FDR. #21, #22 – CONDUIT SCHED.	NEMA 12
'DS-AHU-21'	30A/3P/20ADEF	480V, 3ø	MECH. EQ. RM. M-M05	NA-MCC-1H	SEE FDR. #7, #8 – CONDUIT SCHED.	NEMA 12
'DS-AHU-22'	30A/3P/8ADEF	480V, 3ø	MECH. EQ. RM. M-M05	NA-MCC-2B	SEE FDR. #9, #10 – CONDUIT SCHED.	NEMA 12
'DS-AHU-23'	30A/3P/20ADEF	480V, 3ø	MECH. EQ. RM. M-M05	NA-MCC-2D	SEE FDR. #11, #12 – CONDUIT SCHED.	NEMA 12
'DS-AHU-24'	30A/3P/20ADEF	480V, 3ø	MECH. EQ. RM. M-M05	NA-MCC-2F	SEE FDR. #13, #14 – CONDUIT SCHED.	NEMA 12
'DS-AHU-25'	60A/3P/50ADEF	480V, 3ø	MECH. EQ. RM. M-M05	NA-MCC-1F	SEE FDR. #5, #6 – CONDUIT SCHED.	NEMA 12
'DS-AHU-26'	60A/3P/50ADEF	480V, 3ø	MECH. EQ. RM. M-M05	NA-MCC-2H	SEE FDR. #15, #16 – CONDUIT SCHED.	NEMA 12
'DS-AHU-27'	30A/3P/30ADEF	480V, 3ø	MECH. EQ. RM. M-M05	NA-MCC-2M	SEE FDR. #17, #18 – CONDUIT SCHED.	NEMA 12
'DS-AHU-30'	60A/3P/50ADEF	480V, 3ø	MECH. EQ. RM. M-M05	NA-MCC-3F	SEE FDR. #19, #20 – CONDUIT SCHED.	NEMA 12

PROVIDE LABEL PER ED (E-003 | E-301)

SPECIFIC NOTES:

A. LABEL ALL CONDUIT AND CONDUCTORS, NEW OR EXISTING, PER EA (E-003 | E-001).

THIS DRAWING CREATED ON AUTOCAD 2011 AND WILL BE REVISED ONLY ON AUTOCAD 2011 SYSTEM. FILE: 79K39690– E-003 .DWG

E-003

SYM	ZONE	DESCRIPTION	DATE	APPROVED
		REVISIONS		

JOHNSON, LEVINSON RAGAN, DAVILA, INC. CONSULTING ENGINEERS
1450 Centrepark Boulevard, Suite 350 West Palm Beach, Florida 33401 (561) 689-2303 •(561) 689-2302 Fax www.jldinc.com
Certification Number 6059

SIGNATURES		DATE
DRAWN	P. PALOMINO	6/13/13
CHECKED	C. GABLEMAN	6/13/13
SUBMITTED: ARCH/ENG OF RECORD	C. Gableman CHARLES C. GABLEMAN	6-13-13
ST OF LICENSURE: FL LICENSE NO: 51936		
APPROVED: AE DEPT HEAD	H. Ragan H. RAGAN	6/13/13
NASA SYS/LDE–	S. MEHTA	6/12/13

NATIONAL AERONAUTICS AND SPACE ADMINISTRATION
JOHN F. KENNEDY SPACE CENTER, NASA
KENNEDY SPACE CENTER, FLORIDA

AIR HANDLERS UPGRADES
BOOSTER FABRICATION FACILITY, BFF

CONDUIT ROUTING SCHEDULE

FILE. NO.	SIZE	DWG. NO.	REV
	F	79K39690	
PROJ. NO. 98889.2a		SHEET 31	

KSC FORM 1-11 (3/76)(C/G 3/94)

NOTICE: When Government drawings, specifications, or other data are used for any purpose other than in connection with a definitely related Government procurement operation, the United States Government thereby incurs no responsibility nor obligation whatsoever; and the fact that the Government may have formulated, furnished, or in any way supplied the said drawings, specifications or other data is not to be regarded by implication or otherwise as in any manner licensing the holder or any other person or corporation, or conveying any rights or permission to manufacture, use, or sell any patented invention that may in any way be related thereto.

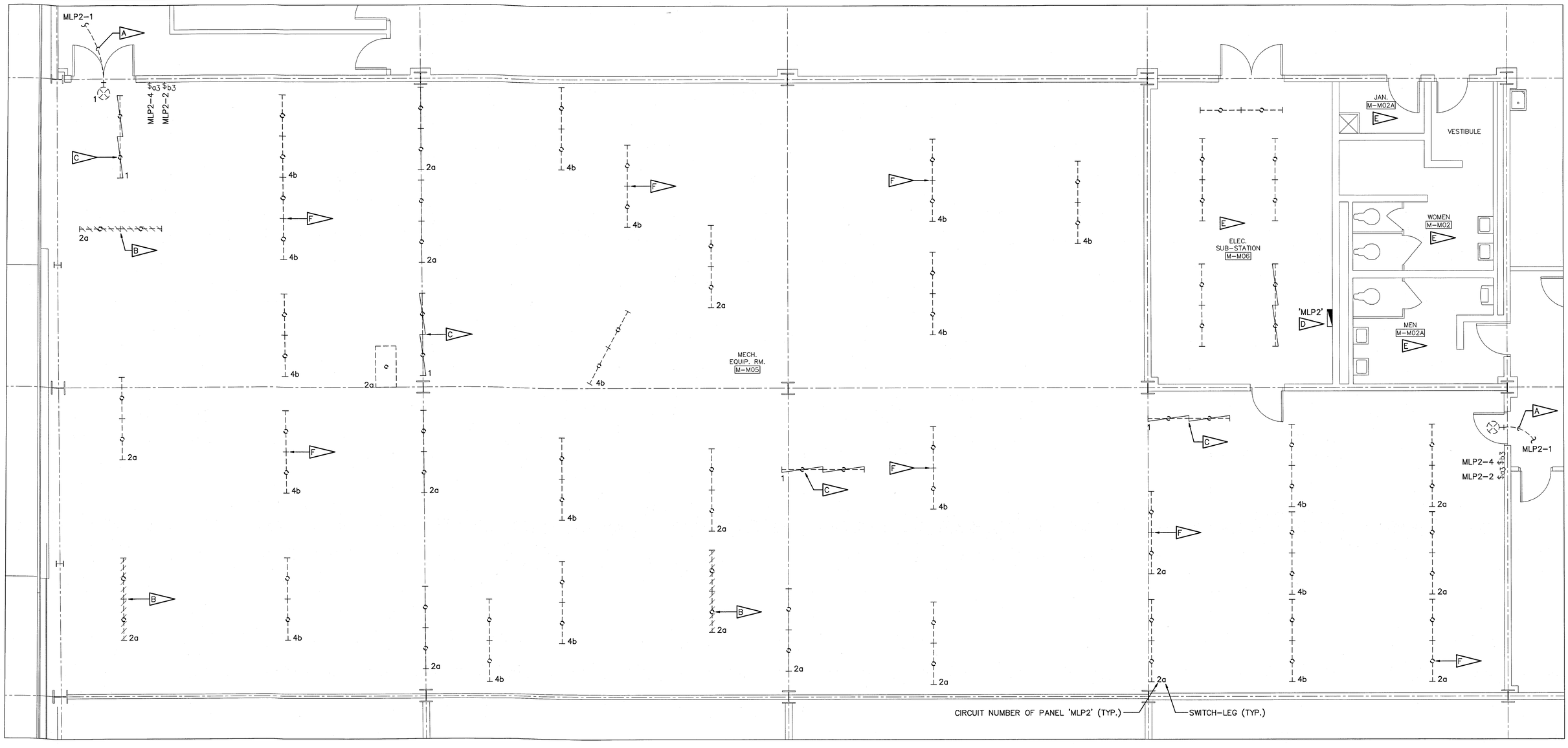

MEZZANINE LIGHTING FLOOR PLAN - DEMOLITION

SCALE: 1/4"=1'-0"

N

SPECIFIC NOTES:

- A — EXIT LIGHT CIRCUIT TO REMAIN ENERGIZED DURING CONSTRUCTION. REWORK EXISTING CIRCUIT AS REQUIRED.
- B — EXISTING LIGHT FIXTURES TO BE DISCONNECTED AND RELOCATED, SEE NEW WORK PLAN.
- C — EXISTING LIGHT FIXTURE ON EMERGENCY CIRCUIT TO REMAIN, TYPICAL.
- D — EXISTING LIGHTING PANEL 'MLP2' – 277/480V, 3ø, 4W TO REMAIN.
- E — LIGHTING FIXTURES IN THIS ROOM TO REMAIN.
- F — EXISTING LIGHT FIXTURES TO REMAIN, SHOWN FOR REFERENCE ONLY. (TYPICAL).

GRAPHIC SCALE
0' 2' 4' 8'
SCALE IN FEET
1/4" = 1'-0"

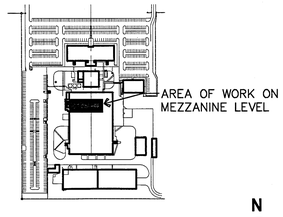

KEY PLAN

N

THIS DRAWING CREATED ON AUTOCAD 2011 AND WILL BE REVISED ONLY ON AUTOCAD 2011 SYSTEM. FILE: 79K39690- E-101.DWG

E-101

SYM	ZONE	DESCRIPTION	DATE	APPROVED
		REVISIONS		

JOHNSON, LEVINSON RAGAN, DAVILA, INC.
CONSULTING ENGINEERS
1450 Centrepark Boulevard, Suite 350
West Palm Beach, Florida 33401
(561) 689-2303 • (561) 689-2302 Fax
www.jldinc.com
Certification Number 6059

SIGNATURES		DATE
DRAWN	P. PALOMINO	6/13/13
CHECKED	C. GABLEMAN	6/13/13
SUBMITTED: ARCHITECT OF RECORD	C. Gableman CHARLES C. GABLEMAN	6.13.13
ST OF LICENSURE:	FL	
LICENSE NO:	51936	
APPROVED: AE DEPT HEAD-	H. Ragan H. RAGAN	6/13/13
NASA SYS/LDE-	S. MEHTA	6/14/13

NATIONAL AERONAUTICS AND SPACE ADMINISTRATION
JOHN F. KENNEDY SPACE CENTER, NASA
KENNEDY SPACE CENTER, FLORIDA

AIR HANDLERS UPGRADES
BOOSTER FABRICATION FACILITY, BFF

MEZZANINE LIGHTING FLOOR PLAN - DEMOLITION

FILE. NO.	SIZE	DWG. NO.	REV
	F	79K39690	
PROJ. NO. 98889.2a		SHEET 32	

KSC FORM 1-11 (3/76)(C/G 3/94)

NOTICE: When Government drawings, specifications, or other data are used for any purpose other than in connection with a definitely related Government procurement operation, the United States Government thereby incurs no responsibility nor obligation whatsoever; and the fact that the Government may have formulated, furnished, or in any way supplied the said drawings, specifications or other data is not to be regarded by implication or otherwise as in any manner licensing the holder or any other person or corporation, or conveying any rights or permission to manufacture, use, or sell any patented invention that may in any way be related thereto.

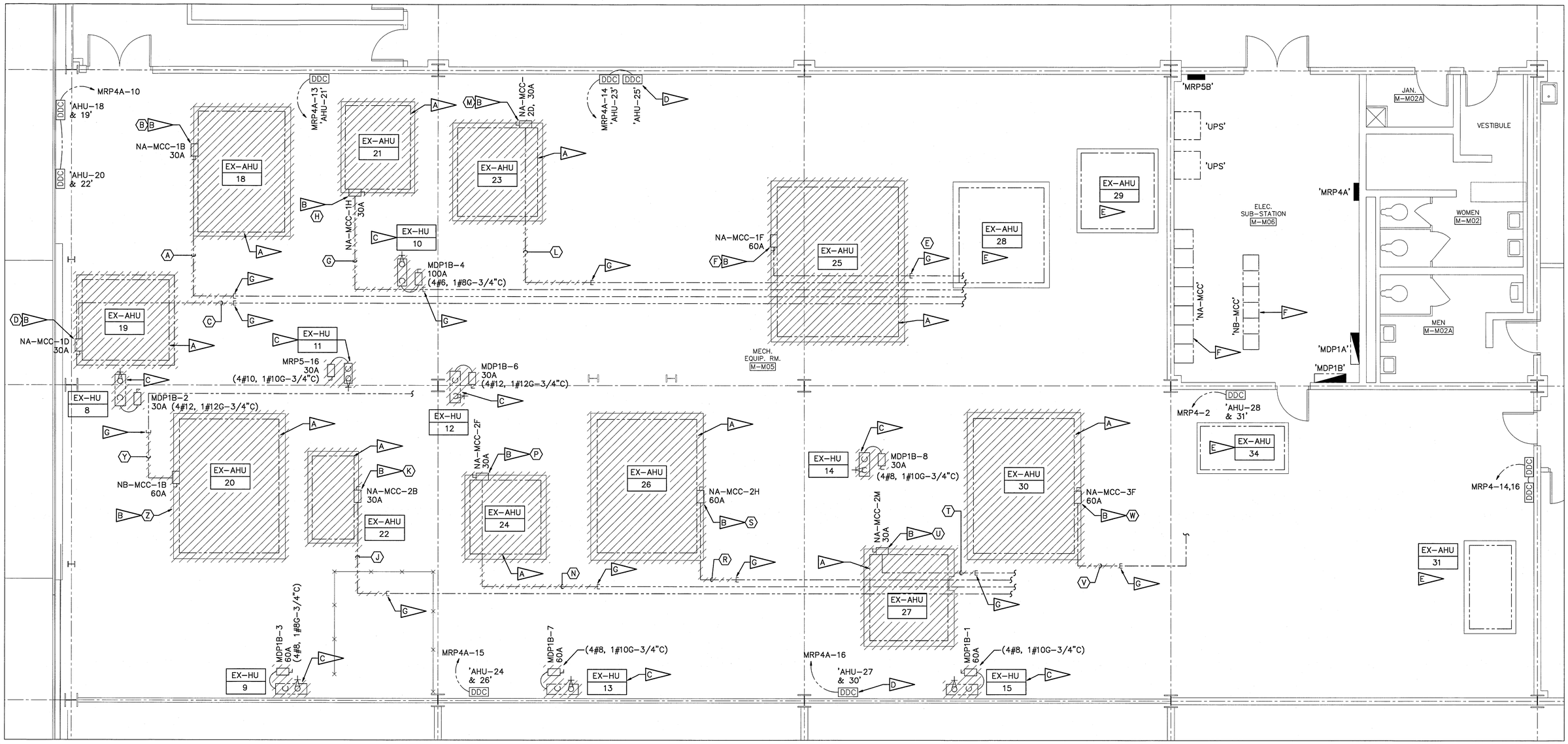

MEZZANINE POWER FLOOR PLAN - DEMOLITION

SCALE: 1/4"=1'-0"

N

SPECIFIC NOTES:

A. EXISTING AIR HANDLING UNIT ('AHU') TO BE DISCONNECTED BY DIVISION 26 AND REMOVED BY DIVISION 23. DISCONNECT AHU FROM EXISTING SECONDARY GROUNDING SYSTEM. SEE NEW WORK PLAN FOR NEW EQUIPMENT LOCATIONS.

B. EXISTING 'AHU' DISCONNECT AND DOWNSTREAM CONDUCTORS TO AHU TO BE REMOVED. PULL-BACK/REWORK EXISTING CONDUIT AND CONDUCTORS TO NEAREST J-BOX OR COUPLING, COIL CONDUCTORS FOR RE-USE TO NEW EQUIPMENT. SEE NEW WORK PLAN AND DETAIL EK (E-102 | E-301).

C. EXISTING HUMIDIFIERS ('HU') TO BE DISCONNECTED AND REMOVED (TYPICAL) BY DIVISION 23. REMOVE CONDUIT AND CONDUCTORS BACK TO SOURCE.

D. EXISTING 'AHU' DDC CONTROL PANEL TO REMAIN (TYPICAL).

E. EXISTING 'AHU' TO REMAIN AS IS.

F. EXISTING MOTOR CONTROL CENTERS WHICH FEED AHU's TO REMAIN. SEE ONE-LINE DIAGRAM.

G. PULL-BACK/REWORK EXISTING CONDUIT AND CONDUCTORS TO NEAREST J-BOX OR COUPLING, COIL CONDUCTORS FOR RE-USE TO NEW EQUIPMENT. SEE NEW WORK PLAN AND DETAIL EK (E-102 | E-301).

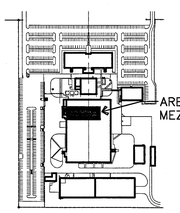

KEY PLAN

N

GRAPHIC SCALE
0' 2' 4' 8'
SCALE IN FEET
1/4" = 1'-0"

THIS DRAWING CREATED ON AUTOCAD 2011 AND WILL BE REVISED ONLY ON AUTOCAD 2011 SYSTEM. FILE: 79K39690- E-102 .DWG

E-102

SYM	ZONE	DESCRIPTION	DATE	APPROVED
		REVISIONS		

JOHNSON, LEVINSON RAGAN, DAVILA, INC. CONSULTING ENGINEERS
1450 Centrepark Boulevard, Suite 350 West Palm Beach, Florida 33401 (561) 689.2303 • (561) 689.2302 Fax www.jldlac.com
Certification Number 6059

SIGNATURES		DATE
DRAWN	P. PALOMINO	6/13/13
CHECKED	C. GABLEMAN	6/13/13
SUBMITTED: ARCH/ENG OF RECORD	C. Gableman CHARLES C. GABLEMAN	6.13.13
ST OF LICENSURE: FL LICENSE NO:	51936	
APPROVED: AE DEPT HEAD- M. LINDEN	M. Linden	6/12/13
NASA SYS/LDE- S. MEHTA	Sunita Mehta	6/17/13

NATIONAL AERONAUTICS AND SPACE ADMINISTRATION
JOHN F. KENNEDY SPACE CENTER, NASA
KENNEDY SPACE CENTER, FLORIDA

AIR HANDLERS UPGRADES
BOOSTER FABRICATION FACILITY, BFF

MEZZANINE POWER FLOOR PLAN - DEMOLITION

FILE. NO.	SIZE	DWG. NO.	REV
	F	79K39690	
PROJ. NO. 98889.2a		SHEET 33	

KSC FORM 1-11 (3/76)(C/G 3/94)

NOTICE: When Government drawings, specifications, or other data are used for any purpose other than in connection with a definitely related Government procurement operation, the United States Government thereby incurs no responsibility nor obligation whatsoever; and the fact that the Government may have formulated, furnished, or in any way supplied the said drawings, specifications or other data is not to be regarded by implication or otherwise as in any manner licensing the holder or any other person or corporation, or conveying any rights or permission to manufacture, use, or sell any patented invention that may in any way be related thereto.

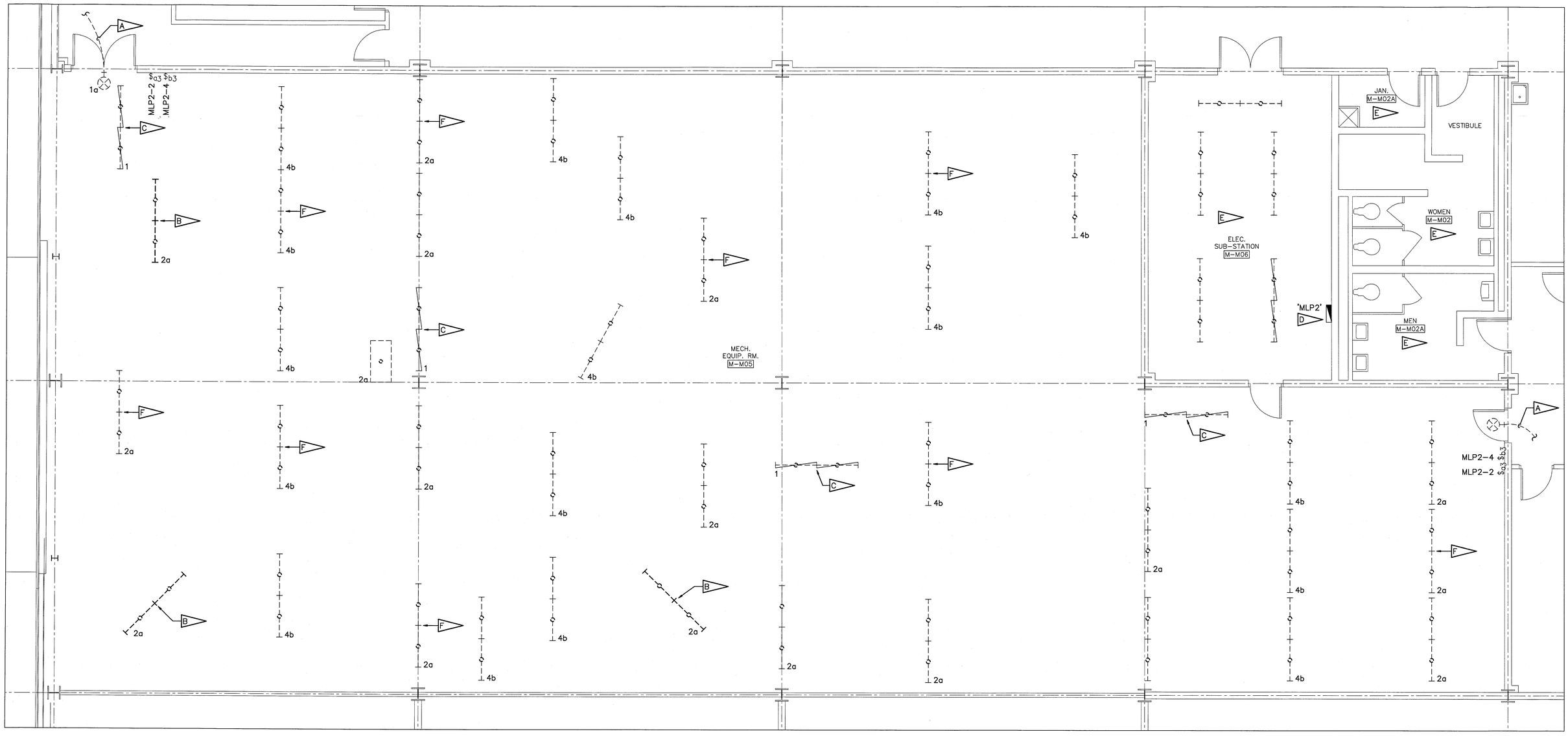

MEZZANINE LIGHTING FLOOR PLAN - NEW WORK

SCALE: 1/4"=1'-0"

SPECIFIC NOTES:

- A — EXISTING EMERGENCY CIRCUIT, EXTEND TO NEW EMERGENCY FIXTURES AS REQUIRED.
- B — INDICATES EXISTING FIXTURE RELOCATED AS SHOWN, RECONNECT TO EXISTING CIRCUIT AND SWITCH-LEG INDICATED. FIELD COORDINATE WITH MECHANICAL DUCT WORK AND PROVIDE SUPPORTS AS REQUIRED. SEE DETAIL EH E-103 | E-301.
- C — INDICATES EXISTING FIXTURE ON EMERGENCY CIRCUIT, SHOWN FOR REFERENCE ONLY.
- D — EXISTING LIGHTING PANEL 'MLP2' – 277/480V, 3ø, 4W TO REMAIN.
- E — LIGHTING FIXTURES IN THIS ROOM TO REMAIN AS IS.
- F — INDICATES EXISTING LIGHT FIXTURE TO REMAIN, SHOWN FOR REFERENCE ONLY. (TYPICAL).

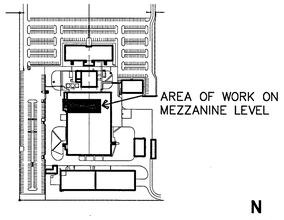

KEY PLAN

GRAPHIC SCALE
0' 2' 4' 8'
SCALE IN FEET
1/4" = 1'-0"

THIS DRAWING CREATED ON AUTOCAD 2011 AND WILL BE REVISED ONLY ON AUTOCAD 2011 SYSTEM. FILE: 79K39690- E-103 .DWG

E-103

SYM	ZONE	DESCRIPTION	DATE	APPROVED
		REVISIONS		

JOHNSON, LEVINSON RAGAN, DAVILA, INC. CONSULTING ENGINEERS
1450 Centrepark Boulevard, Suite 350 West Palm Beach, Florida 33401 (561) 689-2303 • (561) 689-2302 Fax www.jldlar.com
Certification Number 6039

SIGNATURES		DATE
DRAWN	P. PALOMINO	6/13/13
CHECKED	C. GABLEMAN	6/13/13
SUBMITTED: ARCH/ENG OF RECORD	C. Gableman CHARLES C. GABLEMAN	6-13-13
ST OF LICENSURE: FL LICENSE NO:	51936	
APPROVED: AE DEPT HEAD	H. Ragan H. RAGAN	6/13/13
NASA SYS/LDE-	S. MEHTA	6/17/12

NATIONAL AERONAUTICS AND SPACE ADMINISTRATION
JOHN F. KENNEDY SPACE CENTER, NASA
KENNEDY SPACE CENTER, FLORIDA

AIR HANDLERS UPGRADES
BOOSTER FABRICATION FACILITY, BFF

MEZZANINE LIGHTING FLOOR PLAN - NEW WORK

FILE. NO.	SIZE	DWG. NO.	REV
	F	79K39690	
PROJ. NO. 98889.2a		SHEET 34	

KSC FORM 1-11 (3/76)(C/G 3/94)

NOTICE: When Government drawings, specifications, or other data are used for any purpose other than in connection with a definitely related Government procurement operation, the United States Government thereby incurs no responsibility nor obligation whatsoever; and the fact that the Government may have formulated, furnished, or in any way supplied the said drawings, specifications or other data is not to be regarded by implication or otherwise as in any manner licensing the holder or any other person or corporation, or conveying any rights or permission to manufacture, use, or sell any patented invention that may in any way be related thereto.

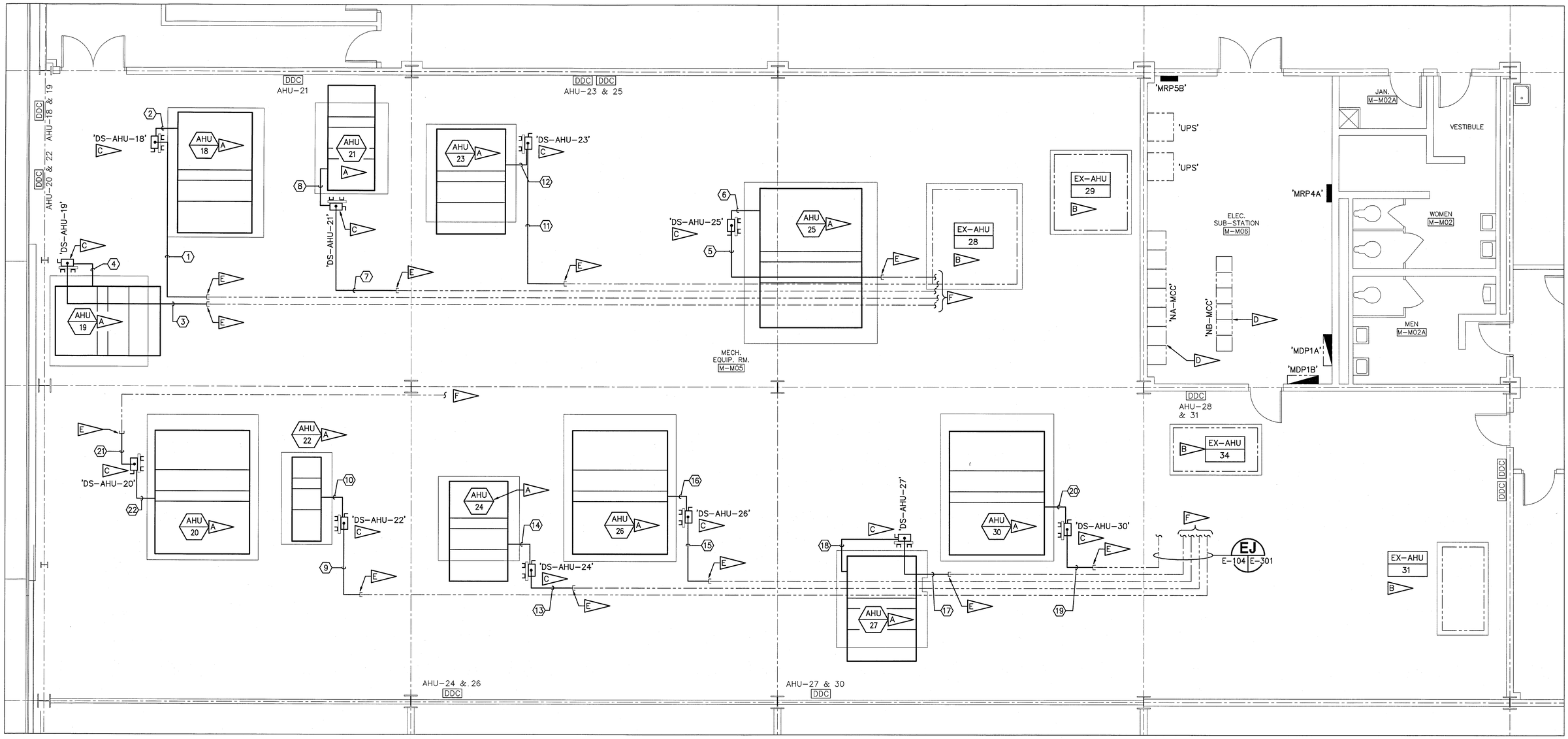

MEZZANINE POWER FLOOR PLAN - NEW WORK

SCALE: 1/4"=1'-0"

N

SPECIFIC NOTES:

A — NEW AIR HANDLING UNIT ('AHU'), RECONNECT TO EXISTING CIRCUIT/STARTER AND SECONDARY GROUNDING SYSTEM (BRAIDED 2/0 AWG CU), SEE DETAIL EL E-104 | E-301.

B — EXISTING AHU TO REMAIN AS IS.

C — NEW 'AHU' DISCONNECT, RE-CONNECT TO EXISTING 'AHU' CIRCUIT AS REQUIRED, SEE DETAIL EG E-104 | E-301 AND FIELD COORDINATE FOR EXACT LOCATION. RACK MOUNT DISCONNECT AS SHOWN, SEE DETAIL EF E-104 | E-301.

D — EXISTING MOTOR CONTROL CENTERS WHICH FEED REPLACED AHUs. SEE ELEVATIONS EM E-104 | E-201 AND EN E-104 | E-201.

E — PROVIDE NEW CONDUIT FROM THIS LOCATION TO NEW EQUIPMENT AS SHOWN, EXTEND CONDUCTORS AS REQUIRED FOR RECONNECTION OF NEW EQUIPMENT.

F — AHU BRANCH CIRCUIT ROUTED BACK TO RESPECTIVE MCC.

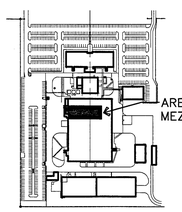

KEY PLAN

N

GRAPHIC SCALE
0' 2' 4' 8'
SCALE IN FEET
1/4" = 1'-0"

THIS DRAWING CREATED ON AUTOCAD 2011 AND WILL BE REVISED ONLY ON AUTOCAD 2011 SYSTEM. FILE: 79K39690- E-104 .DWG

E-104

SYM	ZONE	DESCRIPTION	DATE	APPROVED
		REVISIONS		

JOHNSON, LEVINSON RAGAN, DAVILA, INC. CONSULTING ENGINEERS
1450 Centrepark Boulevard, Suite 350 West Palm Beach, Florida 33401 (561) 689-2303 • (561) 689-2302 Fax www.jldinc.com
Certification Number 6059

SIGNATURES		DATE
DRAWN	P. PALOMINO	6/13/13
CHECKED	C. GABLEMAN	6/13/13
SUBMITTED: ARCH/ENG OF RECORD	C. Gableman CHARLES C. GABLEMAN	6-13-13
ST OF LICENSURE: FL LICENSE NO: 51936		
APPROVED: AE DEPT HEAD- H. RAGAN	H. Ragan	6/13/13
NASA SYS/LDE- S. MEHTA	Sudhir Mehta	6/17/13

NATIONAL AERONAUTICS AND SPACE ADMINISTRATION
JOHN F. KENNEDY SPACE CENTER, NASA
KENNEDY SPACE CENTER, FLORIDA

AIR HANDLERS UPGRADES
BOOSTER FABRICATION FACILITY, BFF

MEZZANINE POWER FLOOR PLAN - NEW WORK

FILE. NO.	SIZE	DWG. NO.	REV
	F	79K39690	
PROJ. NO. 98889.2a		SHEET 35	

KSC FORM 1-11 (3/76)(C/G 3/94)

NOTICE: When Government drawings, specifications, or other data are used for any purpose other than in connection with a definitely related Government procurement operation, the United States Government thereby incurs no responsibility nor obligation whatsoever; and the fact that the Government may have formulated, furnished, or in any way supplied the said drawings, specifications or other data is not to be regarded by implication or otherwise as in any manner licensing the holder or any other person or corporation, or conveying any rights or permission to manufacture, use, or sell any patented invention that may in any way be related thereto.

SPECIFIC NOTES:

A — EXISTING 'MCC' BUCKET SERVING REPLACED 'AHU' (IN KIND). EXISTING BUCKET, BREAKER, FIRE ALARM SHUTDOWN RELAY, ETC TO REMAIN AS IS.

B — EXISTING AHU, DISCONNECT, AND CONDUIT/CONDUCTORS DOWNSTREAM OF DISCONNECT TO AHU TO BE REMOVED IN THEIR ENTIRETY. REMOVE PORTION OF CONDUIT AND PULL BACK CONDUCTORS TO ACCOMMODATE DEMOLITION OF AHU. EXISTING HOMERUN TO BE REUSED.

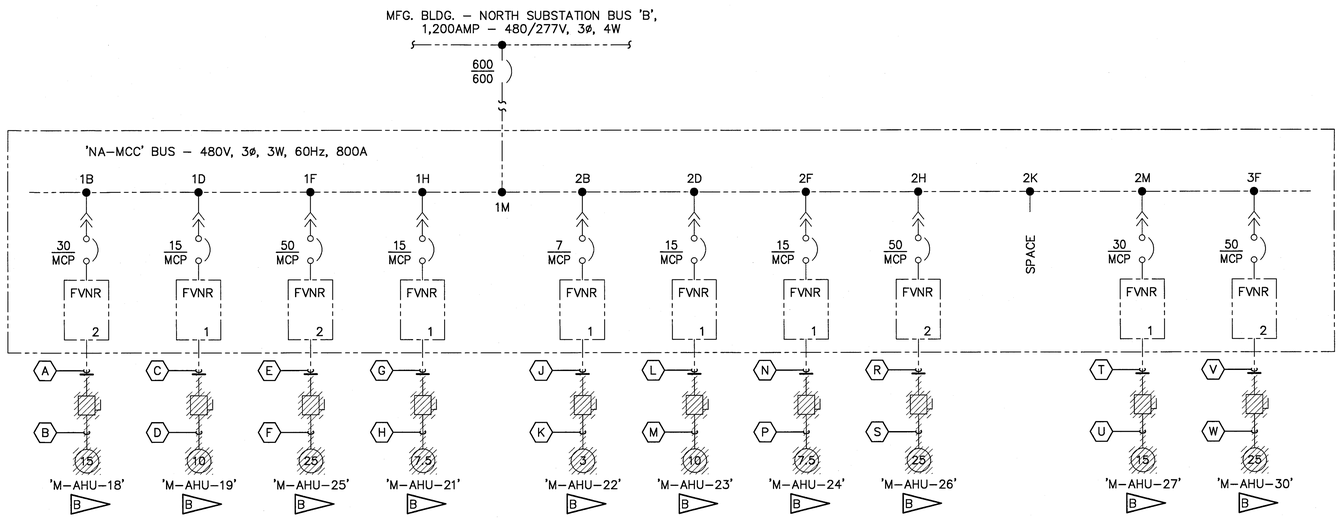

PARTIAL ONE-LINE DIAGRAM - 'NA-MCC' - EXISTING

SCALE: NONE

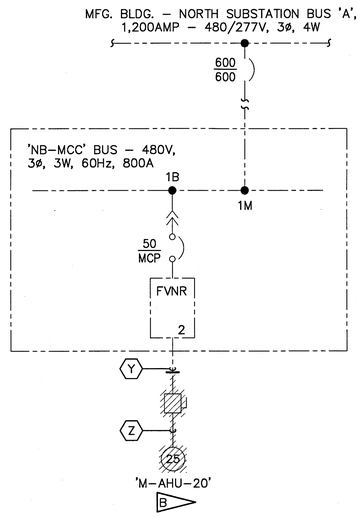

PARTIAL ONE-LINE DIAGRAM - 'NB-MCC' - EXISTING

SCALE: NONE

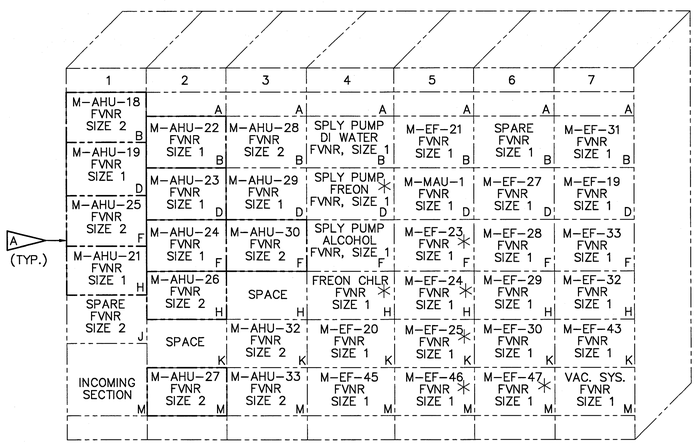

'NA-MCC' - EXISTING FRONT ELEVATION

SCALE: NONE

EM
E-104 | E-201

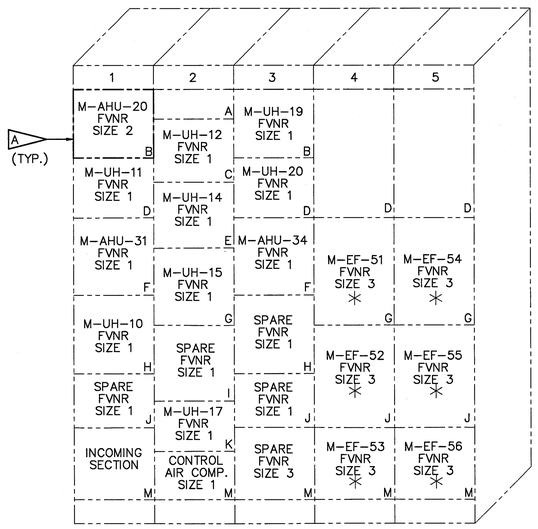

'NB-MCC' - EXISTING FRONT ELEVATION

SCALE: NONE

EN
E-104 | E-201

THIS DRAWING CREATED ON AUTOCAD 2011 AND WILL BE REVISED ONLY ON AUTOCAD 2011 SYSTEM. FILE: 79K39690– E-201.DWG

E-201

SYM	ZONE	DESCRIPTION	DATE	APPROVED
		REVISIONS		

JOHNSON, LEVINSON RAGAN, DAVILA, INC. CONSULTING ENGINEERS
1450 Centerpark Boulevard, Suite 350 West Palm Beach, Florida 33401 (561) 689-2303 (561) 689-2302 Fax www.jldinc.com
Certification Number 6059

SIGNATURES		DATE
DRAWN	P. PALOMINO	6/13/13
CHECKED	C. GABLEMAN	6/13/13
SUBMITTED: ARCHIVING OF RECORD	C. Gableman CHARLES C. GABLEMAN	6·13·13
ST OF LICENSURE: FL		
LICENSE NO: 51936		
APPROVED: AE DEPT HEAD H. RAGAN	H. Ragan	6/13/13
NASA SYS/LDE– S. MEHTA	Sunil Mehta	6/17/13

NATIONAL AERONAUTICS AND SPACE ADMINISTRATION
JOHN F. KENNEDY SPACE CENTER, NASA
KENNEDY SPACE CENTER, FLORIDA

AIR HANDLERS UPGRADES
BOOSTER FABRICATION FACILITY, BFF

ONE-LINE DIAGRAM 'NA-MCC' AND 'NB-MCC' - EXISTING

FILE. NO.	SIZE	DWG. NO.	REV
	F	79K39690	
PROJ. NO. 98889.2a		SHEET 36	

KSC FORM 1-11 (3/76)(C/G 3/94)

NOTICE: When Government drawings, specifications, or other data are used for any purpose other than in connection with a definitely related Government procurement operation, the United States Government thereby incurs no responsibility nor obligation whatsoever; and the fact that the Government may have formulated, furnished, or in any way supplied the said drawings, specifications or other data is not to be regarded by implication or otherwise as in any manner licensing the holder or any other person or corporation, or conveying any rights or permission to manufacture, use, or sell any patented invention that may in any way be related thereto.

SPECIFIC NOTES:

A — WHERE NECESSARY, PROVIDE J-BOX TO ACCOMMODATE EXTENTION OF EXISTING CIRCUIT TO NEW LOAD.

B — PROVIDE AND EXTEND CONDUIT TO DISCONNECT. PULL EXISTING CONDUCTORS IN NEW CONDUIT AND TERMINATE ON LINE SIDE OF DISCONNECT. PROVIDE AND INSTALL LOAD SIDE BRANCH CIRCUIT TO AHU, FIELD VERIFY EXACT CONNECTION POINT, SEE DETAIL EL (E-202 | E-301).

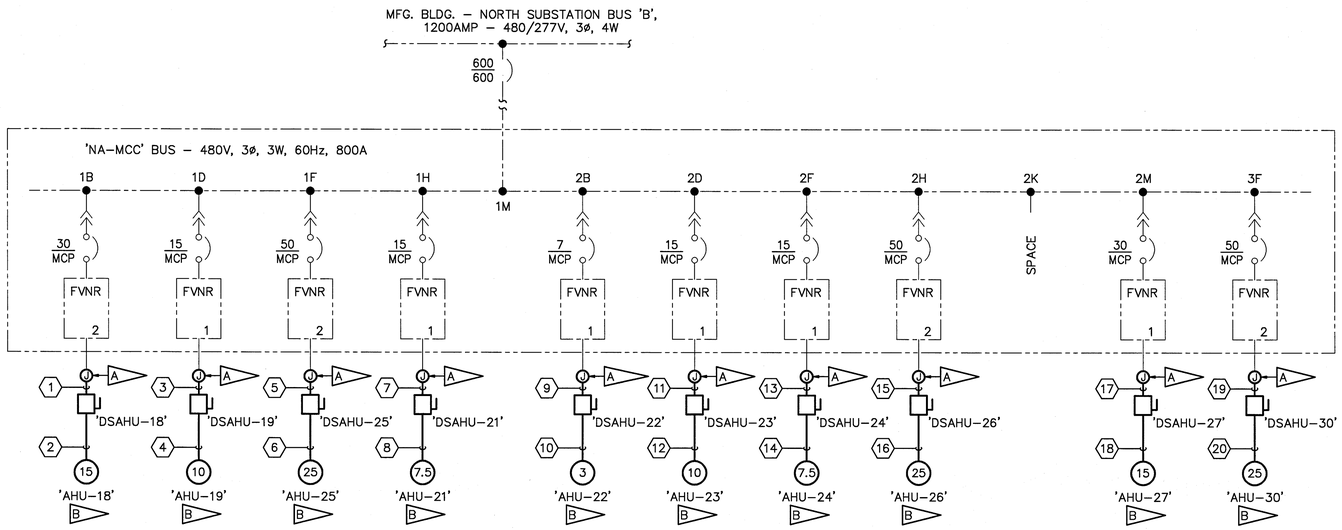

PARTIAL ONE-LINE DIAGRAM - 'NA-MCC' - NEW WORK

SCALE: NONE

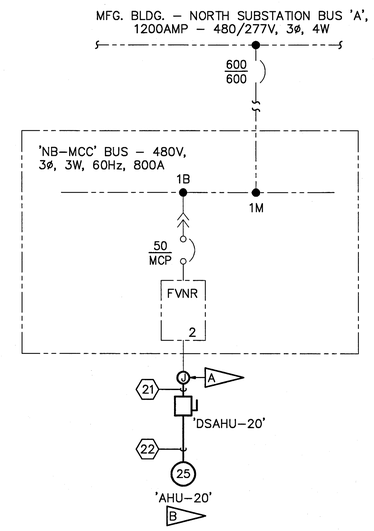

PARTIAL ONE-LINE DIAGRAM - 'NB-MCC' - NEW WORK

SCALE: NONE

THIS DRAWING CREATED ON AUTOCAD 2011 AND WILL BE REVISED ONLY ON AUTOCAD 2011 SYSTEM. FILE: 79K39690- E-202 .DWG

E-202

SYM	ZONE	DESCRIPTION	DATE	APPROVED
		REVISIONS		

JOHNSON, LEVINSON RAGAN, DAVILA, INC. CONSULTING ENGINEERS
1450 Centrepark Boulevard, Suite 350 West Palm Beach, Florida 33401 (561) 689-2303 • (561) 689-2305 Fax www.jldinc.com
Certification Number 6059

SIGNATURES		DATE
DRAWN	P. PALOMINO	6/13/13
CHECKED	C. GABLEMAN	6/13/13
SUBMITTED: ARCH/ENG OF RECORD	CHARLES C. GABLEMAN	6·13·13
ST OF LICENSURE: FL LICENSE NO: 51936		
APPROVED: AE DEPT. HEAD	H. RAGAN	6/13/13
NASA SYS/LDE-	S. MEHTA	6/17/13

NATIONAL AERONAUTICS AND SPACE ADMINISTRATION
JOHN F. KENNEDY SPACE CENTER, NASA
KENNEDY SPACE CENTER, FLORIDA

AIR HANDLERS UPGRADES
BOOSTER FABRICATION FACILITY, BFF

ONE-LINE DIAGRAM 'NA-MCC' AND 'NB-MCC' - NEW WORK

FILE. NO.	SIZE	DWG. NO.	REV
	F	79K39690	
PROJ. NO. 98889.2a		SHEET 37	

KSC FORM 1-11 (3/76)(C/G 3/94)

NOTICE: When Government drawings, specifications, or other data are used for any purpose other than in connection with a definitely related Government procurement operation, the United States Government thereby incurs no responsibility nor obligation whatsoever; and the fact that the Government may have formulated, furnished, or in any way supplied the said drawings, specifications or other data is not to be regarded by implication or otherwise as in any manner licensing the holder or any other person or corporation, or conveying any rights or permission to manufacture, use, or sell any patented invention that may in any way be related thereto.

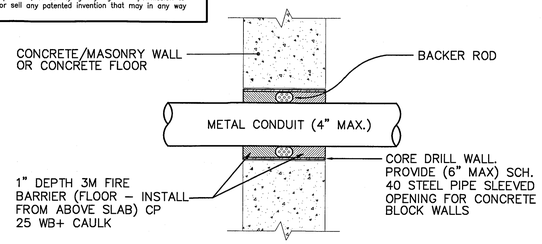

CONDUIT PENETRATION NOTES (CONCRETE/MASONRY):

1. CORE DRILL FOR A MAXIMUM 6 INCH DIAMETER OPENING WITH MAXIMUM 6 INCH SCHEDULE 40 STEEL PIPE SLEEVED OPENING FOR CONCRETE BLOCK OR BRICK WALLS OR MAXIMUM 1–3/8 INCH ANNULAR SPACE.
2. INSTALL POLYETHYLENE BACKER ROD MIN 1 INCH THICKNESS IN OPENING. RECESS 1 INCH FROM WALL SURFACE.
3. INSTALL A MINIMUM OF 1 INCH OF 3M FIRE BARRIER CP 25 WB+ CAULK OVER BACKER ROD.
4. U.L. SYSTEM C–AJ–1001
5. PENETRATIONS USING NON–METALIC PIPE SHALL UTILIZE U.L. SYSTEM C–AJ–2510 OR EQUAL, SPECIFIC REQUIREMENTS VARY FROM THOSE SHOWN ABOVE.

CONDUIT PENETRATION THROUGH RATED CONCRETE/MASONRY WALL OR FLOOR (EB)

NO SCALE — E–001 | E–301

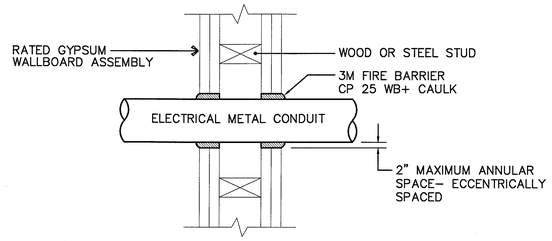

CONDUIT PENETRATION NOTES (GYPSUM):

1. MAXIMUM 2" ANNULAR SPACE – ECCENTRICALLY SPACED.
2. INSTALL 3M FIRE BARRIER CP 25 WB+ CAULK TO COMPLETELY FILL THE ANNULAR SPACE BETWEEN THE PIPE SPACE AND THE WALL ASSEMBLY. FILL TO THE FULL THICKNESS OF THE GYPSUM WALL (MINIMUM 1–1/4 INCH SEALANT THICKNESS) PLUS AN ADDITIONAL 1/4 INCH CROWN AROUND THE PERIMETER OF THE CONDUIT.
3. U.L. SYSTEM W–L–1001
4. PENETRATIONS USING NON–METALIC PIPE SHALL UTILIZE U.L. SYSTEM W–L–2174 OR EQUAL, SPECIFIC REQUIREMENTS VARY FROM THOSE SHOWN ABOVE.

CONDUIT PENETRATION THROUGH RATED GYPSUM WALL (EC)

NO SCALE — E–001 | E–301

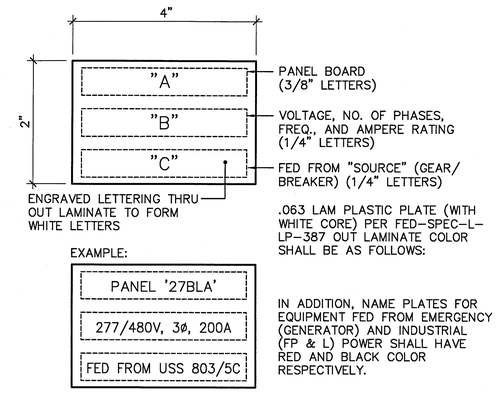

PANELBOARD/ELECTRICAL EQUIPMENT LABEL DETAIL (ED)

NO SCALE — E–003 | E–301

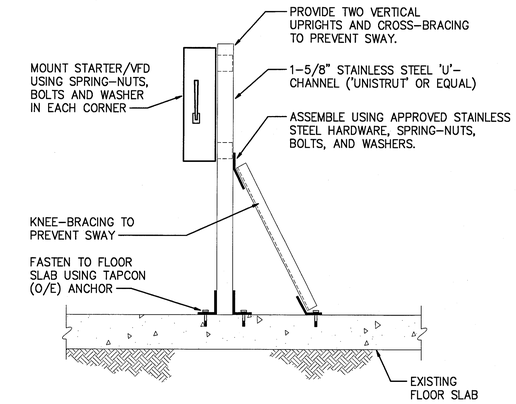

STARTER/DISCONNECT RACK MOUNTING DETAIL (EF)

NO SCALE — E–104 | E–301

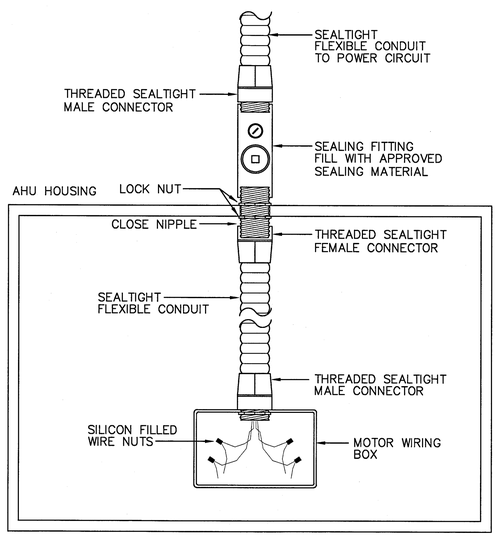

'AHU' WIRING DETAIL (EG)

NO SCALE — E–104 | E–301

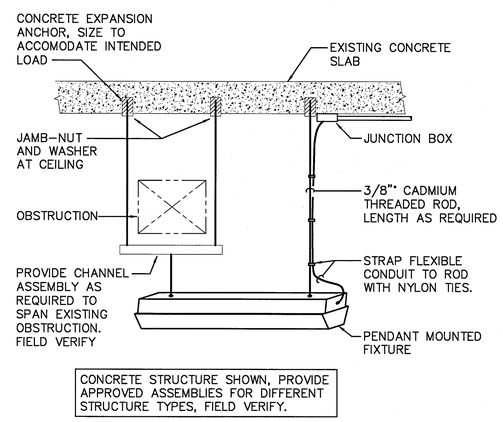

CONCRETE STRUCTURE SHOWN, PROVIDE APPROVED ASSEMBLIES FOR DIFFERENT STRUCTURE TYPES, FIELD VERIFY.

PENDANT MOUNTED FIXTURE DETAIL (EH)

NO SCALE — E–103 | E–301

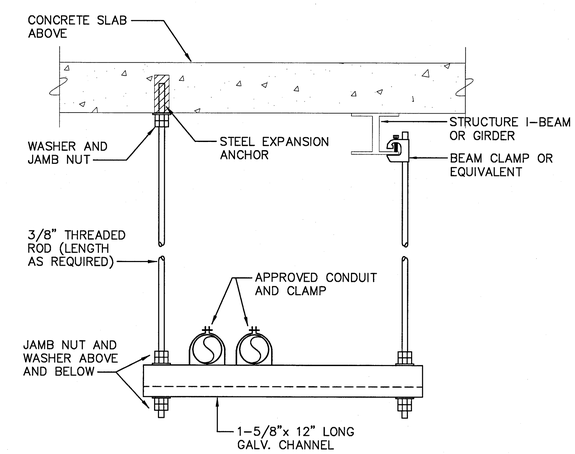

TRAPEZE HANGAR DETAIL (EJ)

SCALE: NONE — E–104 | E–301

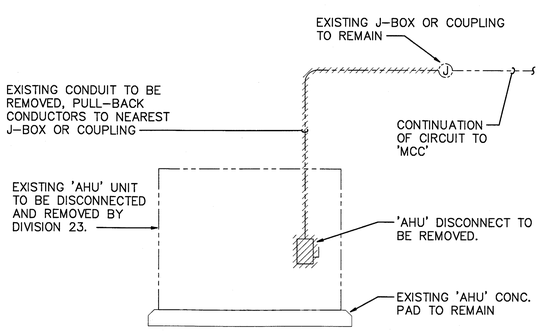

TYPICAL 'AHU' DEMOLITION DETAIL (EK)

NO SCALE — E–102 | E–301

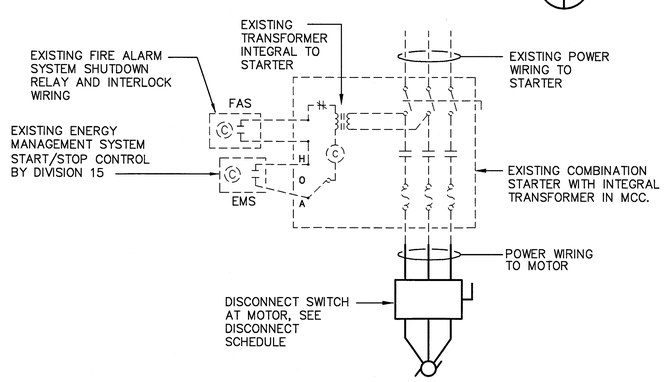

MOTOR STARTER INTERLOCK SCHEMATIC INTERLOCK (EL)

NO SCALE — E–104 | E–301

THIS DRAWING CREATED ON AUTOCAD 2011 AND WILL BE REVISED ONLY ON AUTOCAD 2011 SYSTEM. FILE: 79K39690– E–301.DWG

E-301

SYM	ZONE	DESCRIPTION	DATE	APPROVED
		REVISIONS		

JOHNSON, LEVINSON RAGAN, DAVILA, INC. CONSULTING ENGINEERS — 1450 Centrepark Boulevard, Suite 350 West Palm Beach, Florida 33401 (561) 689-2303 • (561) 689-2305 Fax www.jldinc.com — Certification Number 6039

SIGNATURES		DATE
DRAWN	P. PALOMINO	6/13/13
CHECKED	C. GABLEMAN	6/13/13
SUBMITTED: ARCH/ENG OF RECORD	CHARLES C. GABLEMAN	6·13·13
ST OF LICENSURE: FL	LICENSE No: 51936	
APPROVED: AE DEPT. HEAD	H. RAGAN	6/13/13
NASA SYS/LDE–	S. MEHTA	6/17/13

NATIONAL AERONAUTICS AND SPACE ADMINISTRATION
JOHN F. KENNEDY SPACE CENTER, NASA
KENNEDY SPACE CENTER, FLORIDA

AIR HANDLERS UPGRADES
BOOSTER FABRICATION FACILITY, BFF

ELECTRICAL DETAILS

FILE. NO.	SIZE	DWG. NO.	REV
	F	79K39690	
PROJ. NO. 98889.2a		SHEET 38	

KSC FORM 1-11 (3/76)(C/G 3/94)

NOTICE: When Government drawings, specifications, or other data are used for any purpose other than in connection with a definitely related Government procurement operation, the United States Government thereby incurs no responsibility nor obligation whatsoever; and the fact that the Government may have formulated, furnished, or in any way supplied the said drawings, specifications or other data is not to be regarded by implication or otherwise as in any manner licensing the holder or any other person or corporation, or conveying any rights or permission to manufacture, use, or sell any patented invention that may in any way be related thereto.

LOCATION: ELEC. EQ. M-M06 — PANELBOARD SCHEDULE — EXISTING PANEL: **'MDP1B'**

BUS KVA A	BUS KVA B	BUS KVA C	LOAD	POLES	TRIP	CIRC.	BUS A B C	CIRC.	TRIP	POLES	LOAD	BUS KVA A	BUS KVA B	BUS KVA C
–				–						–		–		
	–		'M-HU-15'	3	40	1		2	20	3	'M-HU-8'		–	
		–		–						–				–
–				–						–		–		
	–		'M-HU-9'	3	20	3		4	70	3	'M-HU-10'		–	
		–		–						–				–
–				–						–		–		
	–		–	3	50	5		6	70	3	25 KVA TX. (FOR OVEN)		–	
		–		–						–				–
–				–						–		–		
	–		'M-HU-13'	3	40	7		8	40	3	'M-HU-14'		–	
		–		–						–				
–				–						–				
	–		BRIDGE CRANE M-126	3	20	9		10	20	3	BRIDGE CRANE M-127			
		–		–						–				
–				–						–				
	–		BRIDGE CRANE M-128	3	20	11		12	20	3	BRIDGE CRANE M-107			
		–		–						–				
–				–						–				
	–		BRIDGE CRANE M-115A	3	20	13		14	20	3	MOTORIZED DOOR M-114			
		–		–						–				
–				–						–				
	–		MONORAIL HOIST ORDNANCE SHOP	3	20	15		16	20	3	MONORAIL HOIST ORDNANCE SHOP			
		–		–						–				
–				–						–				
	–		SPARE	3	20	17		18	20	3	MOTORIZED DOOR M-114			
		–		–						–				
–				–						–				
	–		MOTORIZED DOOR W. HI-BAY	3	20	19		20	60	3	PCU ENG. LAB – COMP. RM.			
		–		–						–				
–				–						–				
	–		SPARE	3	20	21		22	50	3	PCU#2 – EQUIP. ROOM			
		–		–						–				

RATED VOLTAGE: 277/480V 3 PHASE, 4 WIRE
RATING IS TO BE ( )100 ( )225 (●)400 AMPS
( )MAIN BREAKER AMPS (●) MAIN LUGS ONLY
DISTRIBUTION PANEL
PANELBOARD IS TO BE ( )FUSED (●)BOLT IN CIRCUIT BREAKER TYPE
ALL BREAKERS MUST BE RATED TO INTERRUPT A SHORT CIRCUIT CURRENT Isc = 14,000 AMPS, SYM RMS

FEED IS TO BE ( )BOTTOM: (●)TOP FROM: 'MDP1A'
GROUND BAR IS REQUIRED
NEUTRAL BUS IS TO BE (●)FULL ( )DOUBLE SIZE
HINGED DOOR WITH KEYED LATCH (●)IS ( )IS NOT REQUIRED
HARD WIRED SURGE PROTECTION ( )IS (●)IS NOT REQUIRED

LOCATION: ELEC. EQ. M-M06 — PANELBOARD SCHEDULE — REVISED PANEL: **'MDP1B'**

BUS KVA A	BUS KVA B	BUS KVA C	LOAD	POLES	TRIP	CIRC.	BUS A B C	CIRC.	TRIP	POLES	LOAD	BUS KVA A	BUS KVA B	BUS KVA C
–				–						–		–		
	–		**SPARE** A	3	40	1		2	20	3	**SPARE** A		–	
		–		–						–				–
–				–						–		–		
	–		**SPARE** A	3	20	3		4	70	3	**SPARE** A		–	
		–		–						–				–
–				–						–		–		
	–		–	3	50	5		6	70	3	25 KVA TX. (FOR OVEN)		–	
		–		–						–				–
–				–						–		–		
	–		**SPARE** A	3	40	7		8	40	3	**SPARE** A		–	
		–		–						–				
–				–						–				
	–		BRIDGE CRANE M-126	3	20	9		10	20	3	BRIDGE CRANE M-127			
		–		–						–				
–				–						–				
	–		BRIDGE CRANE M-128	3	20	11		12	20	3	BRIDGE CRANE M-107			
		–		–						–				
–				–						–				
	–		BRIDGE CRANE M-115A	3	20	13		14	20	3	MOTORIZED DOOR M-114			
		–		–						–				
–				–						–				
	–		MONORAIL HOIST ORDNANCE SHOP	3	20	15		16	20	3	MONORAIL HOIST ORDNANCE SHOP			
		–		–						–				
–				–						–				
	–		SPARE	3	20	17		18	20	3	MOTORIZED DOOR M-114			
		–		–						–				
–				–						–				
	–		MOTORIZED DOOR W. HI-BAY	3	20	19		20	60	3	PCU ENG. LAB – COMP. RM.			
		–		–						–				
–				–						–				
	–		SPARE	3	20	21		22	50	3	PCU#2 – EQUIP. ROOM			
		–		–						–				

RATED VOLTAGE: 277/480V 3 PHASE, 4 WIRE
RATING IS TO BE ( )100 ( )225 (●)400 AMPS
( )MAIN BREAKER AMPS (●) MAIN LUGS ONLY
DISTRIBUTION PANEL
PANELBOARD IS TO BE ( )FUSED (●)BOLT IN CIRCUIT BREAKER TYPE
ALL BREAKERS MUST BE RATED TO INTERRUPT A SHORT CIRCUIT CURRENT Isc = 14,000 AMPS, SYM RMS

FEED IS TO BE ( )BOTTOM: (●)TOP FROM: 'MDP1A'
GROUND BAR IS REQUIRED
NEUTRAL BUS IS TO BE (●)FULL ( )DOUBLE SIZE
HINGED DOOR WITH KEYED LATCH (●)IS ( )IS NOT REQUIRED
HARD WIRED SURGE PROTECTION ( )IS (●)IS NOT REQUIRED

SPECIFIC NOTES:

A — EXISTING HUMIDIFIER REMOVED, LABEL CIRCUIT AS 'SPARE'. UPDATE PANELBOARD SCHEDULE ACCORDINGLY.

'MDP1B'	REVISED 'MDP1B'

THIS DRAWING CREATED ON AUTOCAD 2011 AND WILL BE REVISED ONLY ON AUTOCAD 2011 SYSTEM. FILE: 79K39690- E-401.DWG

E-401

SYM	ZONE	DESCRIPTION	DATE	APPROVED

REVISIONS

JOHNSON, LEVINSON RAGAN, DAVILA, INC. CONSULTING ENGINEERS — 1450 Centrepark Boulevard, Suite 350 West Palm Beach, Florida 33401 (561) 689-2303•(561) 689-2302 Fax www.jldinc.com — Certification Number 6039

SIGNATURES		DATE
DRAWN	P. PALOMINO	6/13/13
CHECKED	C. GABLEMAN	6/13/13
SUBMITTED: ARCH/ENG OF RECORD	CHARLES C. GABLEMAN	6/13/13
ST OF LICENSURE: FL	LICENSE NO: 51936	
APPROVED: AE DEPT HEAD	H. RAGAN	6/13/13
NASA SYS/LDE-	S. MEHTA	6/17/13

NATIONAL AERONAUTICS AND SPACE ADMINISTRATION
JOHN F. KENNEDY SPACE CENTER, NASA
KENNEDY SPACE CENTER, FLORIDA

AIR HANDLERS UPGRADES
BOOSTER FABRICATION FACILITY, BFF

PANEL SCHEDULES

FILE. NO.	SIZE	DWG. NO.	REV
	F	79K39690	
PROJ. NO. 98889.2a		SHEET 39 OF 39	

KSC FORM 1-11 (3/76)(C/G 3/94)