DOCUMENT INFORMATION: (TITLE, NUMBER, REV, DATE)

EO1-79K39135

Revitalize Medium Voltage Electrical Distribution Systems, Industrial and Payload Processing Areas

PCN 98860

January 15, 2013

**SENSITIVE BUT UNCLASSIFIED (SBU)**

INSTRUCTIONS: This item must be reviewed under the requirements for "Sensitive But Unclassified Information" as described in NPR 1600.1, Chapter 5.

**http://nodis-dms.gsfc.nasa.gov**

| | Yes | No | SBU Reviewer's Signature | Date | Company / Org |
|---|---|---|---|---|---|
| *Document contains SBU?* | ☐ | ☒ | CPBennardo | 1/17/13 | NASA/ TA-33B |

**EXPORT CONTROL (EC)**

INSTRUCTIONS: Attach the document requiring an export determination. Contact the KSC ECO Help Desk (867-9209) for help in completing this form.

**http://exportcontrol.ksc.nasa.gov/**

| *Contractor EC Reviewer's Name and Organization* | *Contractor EC Reviewer's Signature* | *Date* |
|---|---|---|
| | | |

| *NASA ECO Reviewer's Name and Organization* | *NASA ECO Reviewer's Signature* | *Date* |
|---|---|---|
| C.P. BENNARDO TA-33B | CPBennardo | 1/17/13 |

| | **EXPORT DETERMINATION** *(Check one box only)* | |
|---|---|---|
| **EAR 99** | ☒ **NLR** | The information contained in the document is technical in content, but is not technical data as defined by the ITAR or the EAR, and therefore is EAR 99 NLR (no export license required). [General Prohibition Six (Embargo) applies to all items subject to the EAR, i.e. items on the CCL and within EAR 99 NLR. You may not make an export or re-export contrary to the provisions of part 746 (Embargos and Other Special Controls) of the EAR and 22 CFR part 126.1 of the ITAR.] |
| **EAR** Controlled | ☐ | This document is within the purview of the Export Administration Regulations (EAR), 15 CFR 730-774, and is export controlled. It may not be transferred to foreign nationals in the U.S. or abroad without specific approval of a knowledgeable NASA export control official, and/or unless an export license or license exception is obtained/available from the Bureau of Industry and Security, United States Department of Commerce. Violations of these regulations are punishable by fine, imprisonment, or both. |
| **ITAR** Controlled | ☐ | This document contains information which falls under the purview of the U.S. Munitions List (USML), as defined in the International Traffic in Arms Regulations (ITAR), 22 CFR 120-130, and is export controlled. It shall not be transferred to foreign nationals, in the U.S. or abroad, without specific approval of a knowledgeable NASA export control official, and/or unless an export license or license exemption is obtained/available from the United States Department of State. *Violations of these regulations are punishable by fine, imprisonment, or both.* |

KSC FORM 7-657V2 NS (REV. 09/11) PREVIOUS EDITIONS ARE OBSOLETE

# ENGINEERING ORDER

1. Engineering Order No. (Prefix followed by Dwg. No)
E01-79K39135

2. Sheet 1 of 22 Sheets

3. Effectivity (Facility & Vehicle)
Exist. parking lot ltg South and East of O&C M7-355, and IPPA feeders 202/203 and 209

4. Disposition of Old Parts (Check one)
☐ Scrap ☐ Rework ☐ Use ☒ Not Applicable

5. Title of Drawing
Revitalize Medium Voltage Electrical Distribution Systems, Industrial and Payload Processing Areas
PCN 98860

6. Reason for Change
1) Resolve existing field condition and safety issue, wherein existing parking lot lighting circuits were installed without equipment ground conductors.
2) Provide for the medium-voltage electrical power infrastructure to serve proposed new Data Center.

7. Description of Change

1) Drawing 79K39135 sheets 11, 35, 36, 38, 39, 45, 46, 47, 72, 74, 76, 78, 79 were edited and additional drawings C-108, C-403, E-408, and E-605 were created to show the addition of two VFI switches, ductbank routing and sections, two manholes, demolition and replacement of conductors for the proposed Data Center.

2) Drawing 79K39135 sheet 55 was edited and additional drawings E-441 and E-442 were created to show the addition of the NEC compliant equipment grounding conductors for O&C Bldg. (M7-355) parking lot light poles.

3) Drawing 79K39135 sheet 1 was edited to identify the drawings edited and added as part of this Engineering Order.

| ACTION | QTY | FIND NO. | MFR. CODE | PART NO. | DESCRIPTION | STOCK SIZE | MATERIAL SPEC |
|---|---|---|---|---|---|---|---|
| | | | | | | | |
| | | | | | | | |

PARTS LIST

8. SIGNATURES

| | | | |
|---|---|---|---|
| Requester<br>Sudhir S. Mehta<br>Sudhir Mehta / TA-B3B | Date<br>1-17-2013 | Draftsman | Date |
| Stress | Date | Engineer | Date |
| Checker | Date | Approved By<br>James Miller / TA-B3B | Date<br>1/17/2013 |

KSC FORM 21-34 NS (REV. 02/04) PREVIOUS EDITIONS MAY BE USED

NOTICE – WHEN GOVERNMENT DRAWINGS, SPECIFICATIONS, OR OTHER DATA ARE USED FOR ANY PURPOSE OTHER THAN IN CONNECTION WITH A DEFINITELY RELATED GOVERNMENT PROCUREMENT OPERATION, THE UNITED STATES GOVERNMENT THEREBY INCURS NO RESPONSIBILITY NOR ANY OBLIGATION WHATSOEVER; AND THE FACT THAT THE GOVERNMENT MAY HAVE FORMULATED, FURNISHED, OR IN ANY WAY SUPPLIED THE SAID DRAWINGS, SPECIFICATIONS, OR OTHER DATA IS NOT TO BE REGARDED BY IMPLICATION OR OTHERWISE AS IN ANY MANNER LICENSING THE HOLDER OR ANY OTHER PERSON OR CORPORATION, OR CONVEYING ANY RIGHTS OR PERMISSION TO MANUFACTURE, USE, OR SELL ANY PATENTED INVENTION THAT MAY IN ANY WAY BE RELATED THERETO.

# REVITALIZE MEDIUM VOLTAGE ELECTRICAL DISTRIBUTION SYSTEMS, INDUSTRIAL AND PAYLOAD PROCESSING AREAS

## PCN – 98860

### INDEX OF DRAWINGS

| DWG. NO. | SHEET NO. | REV. NO. | TITLE |
|---|---|---|---|
| V–001 | E01 2 | | COVER |
| V–002 | 2 | | VINCINITY & LOCATION MAPS |
| | | | HAZARDOUS |
| H–001 | 3 | | EXECUTIVE SUMMARY FROM LIMITED ASBESTOS SURVEY REPORT |
| H–002 | 4 | | EXECUTIVE SUMMARY FROM PAINT ANALYSIS FOR TOTAL METALS |
| H–003 | 5 | | EXECUTIVE SUMMARY FROM PAINT ANALYSIS FOR TOTAL METALS |
| H–004 | 6 | | EXECUTIVE SUMMARY FROM PAINT ANALYSIS FOR TOTAL METALS |
| H–005 | 7 | | EXECUTIVE SUMMARY FROM PCB TESTING – PAINT CHIP SAMPLES |
| H–006 | 8 | | EXECUTIVE SUMMARY FROM PCB TESTING – TRANSFORMER OIL |
| | | | CIVIL |
| C–001 | 9 | | GENERAL NOTES AND TESTING SCHEDULE |
| C–002 | 10 | | STANDARD ABBREVIATIONS AND SYMBOLS |
| C–100 | E01 3 | | SITE BREAKOUT PLAN |
| C–101 | 12 | | SITE PLAN – AREA C |
| C–102 | 13 | | DEMOLITION PLAN – AREA B |
| C–103 | 14 | | SITE PLAN – AREA A |
| C–104 | 15 | | GRADING PLAN – AREA A |
| C–105 | 16 | | DEMOLITION PLAN – AREA A (2) |
| C–106 | 17 | | STRIPING PLAN – AREA A |
| C–107 | 18 | | DEMOLITION PLAN – AREA D |
| C–108 | E01 4 | | DEMOLITION PLAN – AREA D (2) |
| C–401 | 19 | | PLAN & PROFILE AREA D |
| C–402 | 20 | | PLAN & PROFILE AREA A |
| C–403 | E01 5 | | PLAN & PROFILE AREA E |
| C–501 | 21 | | MISCELLANEOUS DETAILS |
| C–502 | 22 | | MISCELLANEOUS DETAILS (2) |
| C–503 | 23 | | MISCELLANEOUS DETAILS (3) |
| C–504 | 24 | | MISCELLANEOUS DETAILS (4) |
| C–505 | 25 | | MISCELLANEOUS DETAILS (5) |
| C–506 | 26 | | MISCELLANEOUS DETAILS (6) |
| | | | STRUCTURAL |
| S–001 | 27 | | GENERAL NOTES AND ABBREVIATIONS |
| S–101 | 28 | | FOUNDATION SS 119A AND SS 119B PLAN AND SECTIONS |
| S–102 | 29 | | FOUNDATION SS 227A AND 227B PLAN SECTIONS, AND DETAILS |
| S–301 | 30 | | SECTIONS AND DETAILS |
| S–302 | 31 | | SECTIONS AND DETAILS |
| S–401 | 32 | | IACP (M7–407) NORTH WALL CONDUIT SUPPORT |
| | | | ELECTRICAL |
| E–001 | 33 | | GENERAL NOTES AND ABBREVIATIONS |
| E–002 | 34 | | SYMBOLS LEGENDS |
| E–003 | E01 6 | | EXISTING CABLE SCHEDULE |
| E–004 | E01 7 | | MODIFIED CABLE SCHEDULE |
| E–100 | 37 | | SITE BREAKOUT PLAN |
| E–101 | E01 8 | | SITE PLAN – AREA 1 |
| E–102 | E01 9 | | SITE PLAN – AREA 2 |
| E–103 | 40 | | SITE PLAN – AREA 3 |
| E–104 | 41 | | SITE PLAN – AREA 4 |
| E–105 | 42 | | SITE PLAN – AREA 5 |
| E–106 | 43 | | SITE PLAN – AREA 6 |
| E–107 | 44 | | SITE PLAN – AREA 7 |
| E–108 | E01 10 | | SITE PLAN – AREA 8 |
| E–401 | E01 11 | | ENLARGED SITE PLAN |
| E–402 | E01 12 | | ENLARGED SITE PLAN |
| E–403 | 48 | | ENLARGED SITE PLAN |
| E–404 | 49 | | ENLARGED SITE PLAN – PAD SOUTH O&C |

### INDEX OF DRAWINGS

| DWG. NO. | SHEET NO. | REV. NO. | TITLE |
|---|---|---|---|
| E–405 | 50 | | ENLARGED SITE PLAN |
| E–406 | 51 | | ENLARGED SITE PLAN |
| E–407 | 52 | | ENLARGED SITE PLAN – LBS–80 |
| E–408 | E01 13 | | ENLARGED SITE PLAN |
| E–411 | 53 | | ENLARGED SITE PLAN – ORSINO SUBSTATION |
| E–412 | 54 | | ENLARGED SITE PLAN – SUBSTATIONS SS B THRU F – DEMOLITION |
| E–413 | E01 20 | | ENLARGED SITE PLAN – SUBSTATION SS 227A & SS 227B – MODIFIED |
| E–414 | 56 | | PARTIAL PLAN – AUDITORIUM AND TRAINING BLDG. (M7–351) – MODIFIED |
| E–415 | 57 | | ENLARGED SITE PLAN – SS 119A AND SS 119B |
| E–421 | 58 | | PARTIAL PLAN – O&C BLDG. (M7–355) WEST EQUIPMENT ROOM – MODIFIED |
| E–422 | 59 | | PARTIAL PLAN – O&C BLDG. (M7–355) MECH. RM. 1410 – DEMOLITION |
| E–423 | 60 | | PARTIAL PLAN – O&C BLDG. (M7–355) MECH. RM. 1410 – MODIFIED |
| E–424 | 61 | | PARTIAL PLAN – O&C BLDG. (M7–355) EXTERIOR SOUTH – MODIFIED |
| E–425 | 62 | | PARTIAL PLAN – O&C BLDG. (M7–355) FIRE PUMP RM. – MODIFIED |
| E–431 | 63 | | PARTIAL PLAN – IACP (M7–407) WEST END – DEMOLTION |
| E–432 | 64 | | PARTIAL PLAN – IACP (M7–407) EAST END – DEMOLITION |
| E–433 | 65 | | PARTIAL PLAN – IACP (M7–407) WEST END – MODIFIED |
| E–434 | 66 | | PARTIAL PLAN – IACP (M7–407) EAST END – MODIFIED |
| E–435 | 67 | | PARTIAL EXTERIOR ELEVATION – IACP (M7–407) NORTH WALL – MODIFIED |
| E–436 | 68 | | PARTIAL INTERIOR ELEVATION – IACP (M7–407) SOUTH WALL – MODIFIED |
| E–441 | E01 21 | | Q&C PARKING LOT WEST – LIGHTING |
| E–442 | E01 22 | | Q&C PARKING LOT EAST – LIGHTING |
| E–501 | 69 | | MISCELLANEOUS DETAILS |
| E–502 | 70 | | DETAILS – SUBSTATIONS SS 119A AND SS 119B EQUIPMENT PAD |
| E–503 | 71 | | DETAILS – SUBSTATIONS SS 227A AND 227B EQUIPMENT PAD |
| E–511 | E01 14 | | MANHOLE DETAILS |
| E–512 | 73 | | MISCELLANEOUS DETAILS |
| E–513 | E01 15 | | VFI DETAILS |
| E–514 | 75 | | LBS DETAILS |
| E–515 | E01 16 | | DUCT BANK SECTIONS |
| E–516 | 77 | | DUCT BANK SECTIONS |
| E–601 | E01 17 | | PARTIAL ONE–LINE FEEDERS 202–203 AND 204–205 – DEMOLTION |
| E–602 | E01 18 | | PARTIAL ONE–LINE FEEDERS 202–203 AND 204–205 – MODIFIED |
| E–603 | 80 | | PARTIAL ONE–LINE FEEDERS 101, 102, 213 AND 215 – DEMOLITION |
| E–604 | 81 | | PARTIAL ONE–LINE FEEDERS 101, 102, 213 AND 215 – MODIFIED |
| E–605 | E01 19 | | PARTIAL ONE–LINE FEEDER 209 DEMOLITION AND MODIFIED |
| E–611 | 82 | | PARTIAL ONE–LINE SS–B, C, D, E, EE & F – DEMOLITION |
| E–612 | 83 | | PARTIAL ONE–LINE SS 227A AND SS 227B – MODIFIED |
| E–621 | 84 | | ONE LINE DIAGRAM – SUBSTATION SS–119 – EXISTING |
| E–622 | 85 | | ONE LINE DIAGRAM – SUBSTATION SS–119B |
| E–623 | 86 | | ONE LINE DIAGRAM – SUBSTATION SS–119A |
| E–631 | 87 | | VFI METERING – WIRING DIAGRAM |
| E–632 | 88 | | SYSTEM ARCHITECTURE DIAGRAMS |
| E–633 | 89 | | SYSTEM ARCHITECTURE DIAGRAMS |
| E–634 | 90 | | SYSTEM ARCHITECTURE DIAGRAMS |
| E–635 | 91 | | SYSTEM ARCHITECTURE DIAGRAMS |
| E–641 | 92 | | SWITCHBOARD AND PANELBOARD SCHEDULES |

DOCUMENT INFORMATION: (TITLE, NUMBER, REV, DATE)

REVITALIZE MEDIUM VOLTAGE ELECTRICAL DISTRIBUTION SYSTEMS, INDUSTRIAL AND PAYLOAD PROCESSING AREAS
PCN 98860
FINAL SUBMITTAL SEPTEMBER 24, 2012

**SENSITIVE BUT UNCLASSIFIED (SBU)**

INSTRUCTIONS: This item must be reviewed under the requirements for "Sensitive But Unclassified Information" as described in NPR 1600.1, Chapter 5.

**http://nodis-dms.gsfc.nasa.gov**

| | Yes | No | SBU Reviewer's Signature | Date | Company / Org |
|---|---|---|---|---|---|
| *Document contains SBU?* | ☐ | ☐ | | | |

**EXPORT CONTROL (EC)**

INSTRUCTIONS: Attach the document requiring an export determination. Contact the KSC ECO Help Desk (867-9209) for help in completing this form.

**http://exportcontrol.ksc.nasa.gov/**

| *Contractor EC Reviewer's Name and Organization* | *Contractor EC Reviewer's Signature* | *Date* |
|---|---|---|
| | | |

| *NASA ECO Reviewer's Name and Organization* | *NASA ECO Reviewer's Signature* | *Date* |
|---|---|---|
| | | |

| | EXPORT DETERMINATION (Check one box only) | |
|---|---|---|
| **EAR 99** | ☐ NLR | The information contained in the document is technical in content, but is not technical data as defined by the ITAR or the EAR, and therefore is EAR 99 NLR (no export license required). [General Prohibition Six (Embargo) applies to all items subject to the EAR, i.e. items on the CCL and within EAR 99 NLR. You may not make an export or re-export contrary to the provisions of part 746 (Embargos and Other Special Controls) of the EAR and 22 CFR part 126.1 of the ITAR.] |
| **EAR Controlled** | ☐ | This document is within the purview of the Export Administration Regulations (EAR), 15 CFR 730-774, and is export controlled. It may not be transferred to foreign nationals in the U.S. or abroad without specific approval of a knowledgeable NASA export control official, and/or unless an export license or license exception is obtained/available from the Bureau of Industry and Security, United States Department of Commerce. Violations of these regulations are punishable by fine, imprisonment, or both. |
| **ITAR Controlled** | ☐ | This document contains information which falls under the purview of the U.S. Munitions List (USML), as defined in the International Traffic in Arms Regulations (ITAR), 22 CFR 120-130, and is export controlled. It shall not be transferred to foreign nationals, in the U.S. or abroad, without specific approval of a knowledgeable NASA export control official, and/or unless an export license or license exemption is obtained/available from the United States Department of State. *Violations of these regulations are punishable by fine, imprisonment, or both.* |

KSC FORM 7-657V2 NS (REV. 09/11) PREVIOUS EDITIONS ARE OBSOLETE

E01–79K39135

SHEET 2 OF 22

| SYM. | ZONE | DESCRIPTION | DATE | APPROVED |
|---|---|---|---|---|
| | | REVISIONS | | |

URS
7650 West Courtney Campbell Causeway
Suite 700
Tampa, Florida 33607
Ph: (813) 286–1711 Fax: (813) 286–6587
FDBPR LICENSE NO. 7285

| SIGNATURES | | DATE |
|---|---|---|
| DRAWN | TRS | 9/24/12 |
| CHECKED | GHD | 9/24/12 |
| SUBMITTED | G. KERLY | |
| APPROVED | F. WALKER | |
| | S. MEHTA | |
| | P. BENNARDO | |

NATIONAL AERONAUTICS AND SPACE ADMINISTRATION
JOHN F. KENNEDY SPACE CENTER, NASA
KENNEDY SPACE CENTER, FLORIDA

REVITALIZE MEDIUM VOLTAGE ELECTRICAL DISTRIBUTION SYSTEMS, INDUSTRIAL AND PAYLOAD PROCESSING AREAS

COVER

V–001

| FILE NO. | SIZE | DWG. NO. |
|---|---|---|
| | F | 79K39135 |

PCN NO. 98860 SHEET 1 OF 92

TECHNICAL SPECIFICATION 79K39136

KSC FORM 1–11A (REV 6/91) (C/G 2/93)

NOTICE – WHEN GOVERNMENT DRAWINGS, SPECIFICATIONS, OR OTHER DATA ARE USED FOR ANY PURPOSE OTHER THAN IN CONNECTION WITH A DEFINITELY RELATED GOVERNMENT PROCUREMENT OPERATION, THE UNITED STATES GOVERNMENT THEREBY INCURS NO RESPONSIBILITY NOR ANY OBLIGATION WHATSOEVER, AND THE FACT THAT THE GOVERNMENT MAY HAVE FORMULATED, FURNISHED, OR IN ANY WAY SUPPLIED THE SAID DRAWINGS, SPECIFICATIONS, OR OTHER DATA IS NOT TO BE REGARDED BY IMPLICATION OR OTHERWISE AS IN ANY MANNER LICENSING THE HOLDER OR ANY OTHER PERSON OR CORPORATION, OR CONVEYING ANY RIGHTS OR PERMISSION TO MANUFACTURE, USE, OR SELL ANY PATENTED INVENTION THAT MAY IN ANY WAY BE RELATED THERETO.

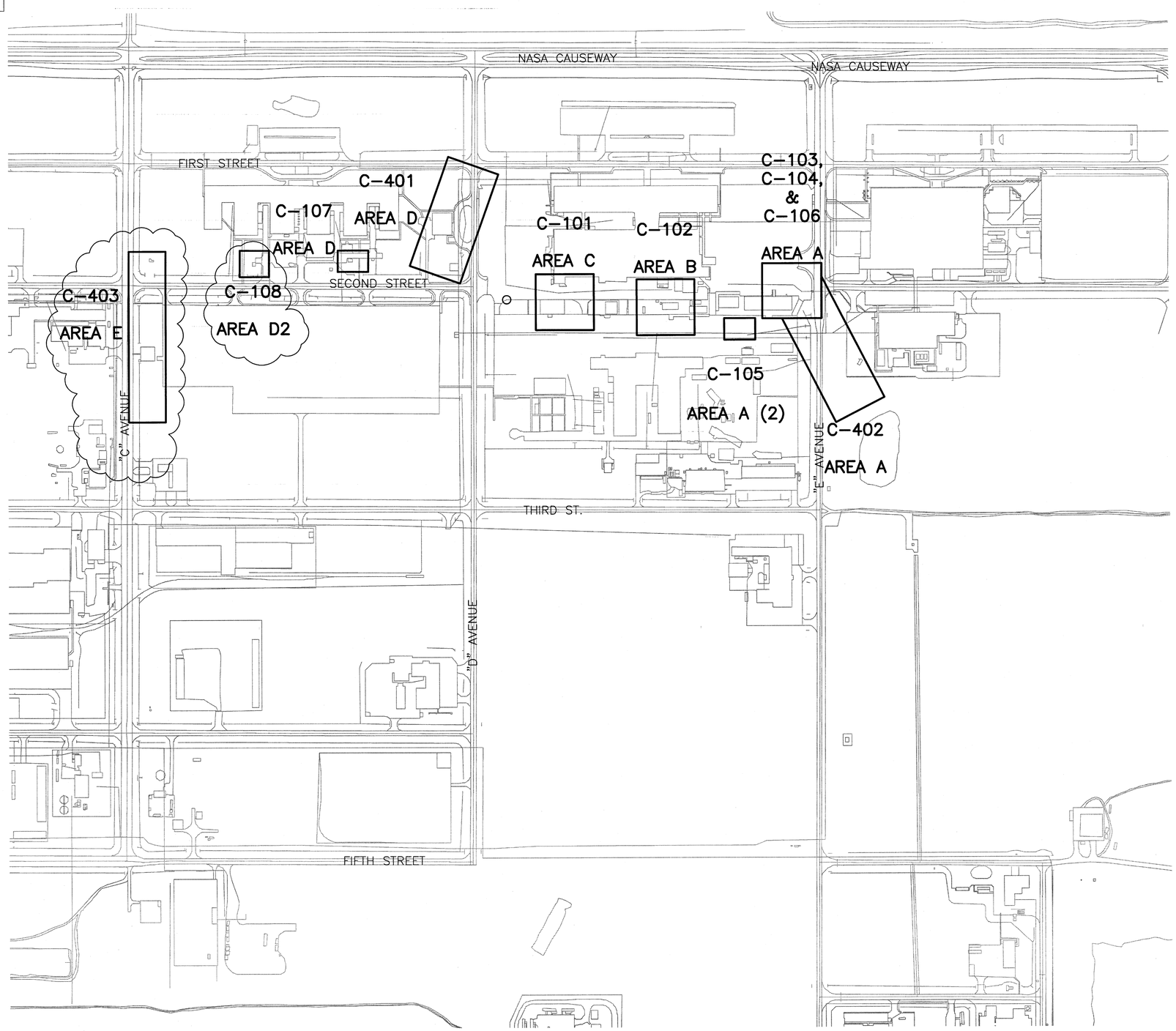


N

GRAPHIC SCALE

200' 0 100' 200'

SCALE: 1" = 200'

## SITE BREAKOUT PLAN

SCALE 1" = 200'

E01-79K39135

SHEET 3 OF 22

| SYM. | ZONE | DESCRIPTION | DATE | APPROVED |
|---|---|---|---|---|

REVISIONS

URS
7650 West Courtney Campbell Causeway
Suite 700
Tampa, Florida 33607
Ph: (813) 286-1711 Fax: (813) 286-6587
FDBPR LICENSE NO. 7285

| SIGNATURES | | DATE |
|---|---|---|
| DRAWN | CAB | 9/24/12 |
| CHECKED | JWG | 9/24/12 |
| SUBMITTED | VICKI M. HARTMAN | |
| ST OF LICENSURE: FL | | |
| LICENSE NO.: 54611 | | |
| APPROVED | F. WALKER | |
| | S. MEHTA | |

NATIONAL AERONAUTICS AND SPACE ADMINISTRATION
JOHN F. KENNEDY SPACE CENTER, NASA
KENNEDY SPACE CENTER, FLORIDA

REVITALIZE MEDIUM VOLTAGE ELECTRICAL DISTRIBUTION SYSTEMS, INDUSTRIAL AND PAYLOAD PROCESSING AREAS

SITE BREAKOUT PLAN

C-100

| FILE NO. | SIZE | DWG. NO. |
|---|---|---|
| | F | 79K39135 |
| PCN NO. | 98860 | SHEET 11 |

T:\NASA KSC\Task No. 1\Drawings\C-100 SITE BREAKOUT PLAN.dwg 01/14/2013 16:26

KSC FORM 1-11A (REV 6/91) (C/G 12/93)

NOTICE – WHEN GOVERNMENT DRAWINGS, SPECIFICATIONS, OR OTHER DATA ARE USED FOR ANY PURPOSE OTHER THAN IN CONNECTION WITH A DEFINITELY RELATED GOVERNMENT PROCUREMENT OPERATION, THE UNITED STATES GOVERNMENT THEREBY INCURS NO RESPONSIBILITY NOR ANY OBLIGATION WHATSOEVER; AND THE FACT THAT THE GOVERNMENT MAY HAVE FORMULATED, FURNISHED, OR IN ANY WAY SUPPLIED THE SAID DRAWINGS, SPECIFICATIONS, OR OTHER DATA IS NOT TO BE REGARDED BY IMPLICATION OR OTHERWISE AS IN ANY MANNER LICENSING THE HOLDER OR ANY OTHER PERSON OR CORPORATION, OR CONVEYING ANY RIGHTS OR PERMISSION TO MANUFACTURE, USE, OR SELL ANY PATENTED INVENTION THAT MAY IN ANY WAY BE RELATED THERETO.

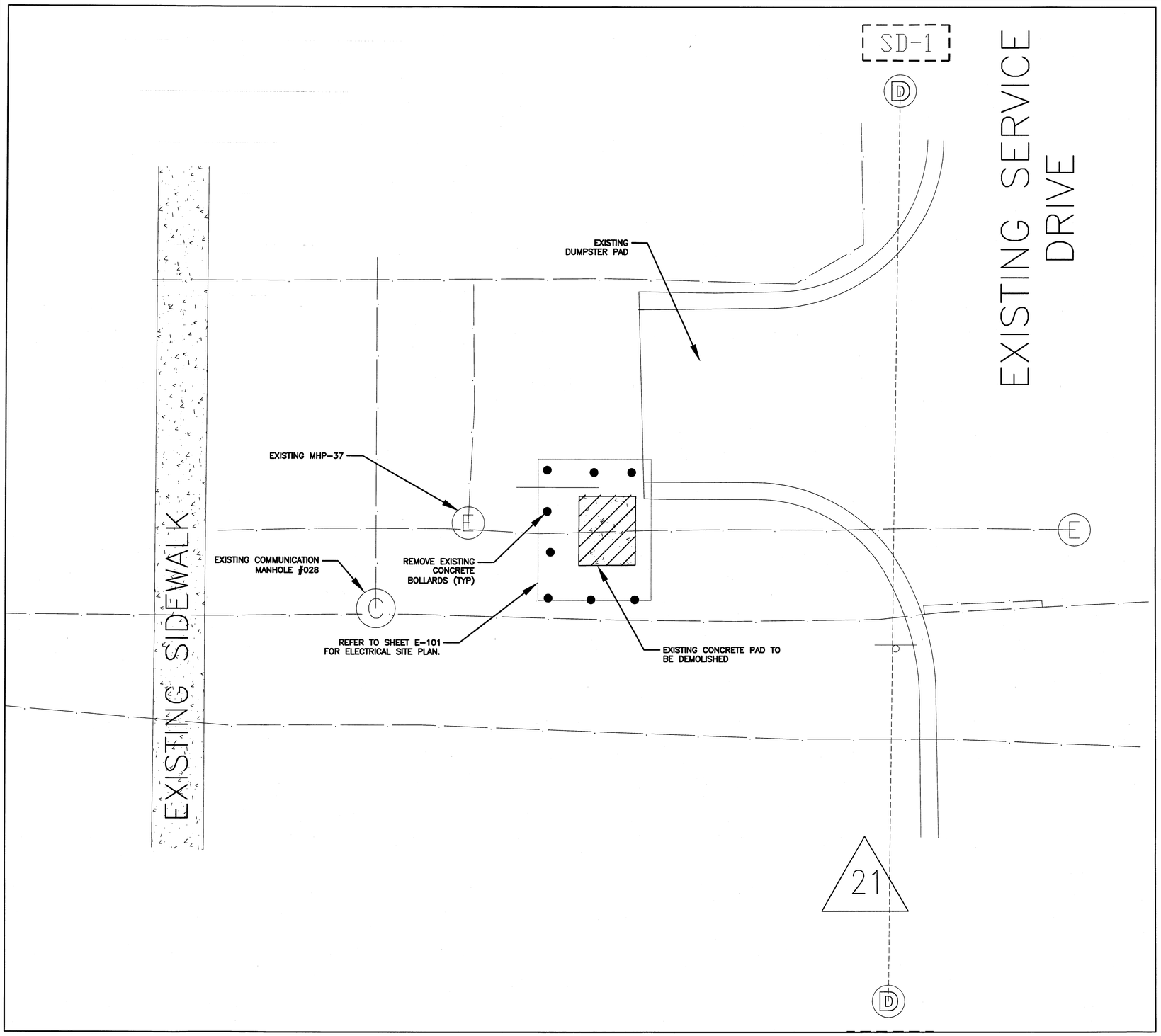


## DEMOLITION PLAN – AREA D (2)

SCALE 1" = 5' – 0"

N

GRAPHIC SCALE

5' 0 2.5' 5'

SCALE: 1" = 5'

**SPECIFIC NOTES:**

A. REFER TO DWG. C-001 FOR GENERAL NOTES.

**NOTE:**
**CONTRACTOR SHALL PROVIDE EROSION CONTROL/SILT FENCE AT ALL STORM SEWER STRUCTURES LOCATED WITHIN AND IMMEDIATELY DOWNSTREAM OF THE PROJECT WORK AREAS. REFER TO DETAIL SHEET C-501.**

E01-79K39135

SHEET 4 OF 22

C-108

| SYM. | ZONE | DESCRIPTION | DATE | APPROVED |
|---|---|---|---|---|
| | | REVISIONS | | |

URS
7650 West Courtney Campbell Causeway
Suite 700
Tampa, Florida 33607
Ph: (813) 286-1711 Fax: (813) 286-6587
FDBPR LICENSE NO. 7285

| SIGNATURES | | DATE |
|---|---|---|
| DRAWN | CAB | 9/24/12 |
| CHECKED | JWG | 9/24/12 |
| SUBMITTED VICKI M. HARTMAN | | 11/15/12 |
| ST OF LICENSURE: FL LICENSE NO.: 54611 | | |
| APPROVED F. WALKER | | 1/15/13 |
| S. MEHTA | | 1-17-13 |

NATIONAL AERONAUTICS AND SPACE ADMINISTRATION
JOHN F. KENNEDY SPACE CENTER, NASA
KENNEDY SPACE CENTER, FLORIDA

REVITALIZE MEDIUM VOLTAGE ELECTRICAL DISTRIBUTION SYSTEMS, INDUSTRIAL AND PAYLOAD PROCESSING AREAS

DEMOLITION PLAN – AREA D (2)

| FILE NO. | SIZE | DWG. NO. |
|---|---|---|
| | F | 79K39135 |
| PCN NO. 98860 | | SHEET |

KSC FORM 1-11A (REV 6/91) (C/G 12/93)

T:\NASA KSC\Task No. 1\Drawings\SITE PLAN base.dwg 01/14/2013 14:28

NOTICE – WHEN GOVERNMENT DRAWINGS, SPECIFICATIONS, OR OTHER DATA ARE USED FOR ANY PURPOSE OTHER THAN IN CONNECTION WITH A DEFINITELY RELATED GOVERNMENT PROCUREMENT OPERATION, THE UNITED STATES GOVERNMENT THEREBY INCURS NO RESPONSIBILITY NOR ANY OBLIGATION WHATSOEVER; AND THE FACT THAT THE GOVERNMENT MAY HAVE FORMULATED, FURNISHED, OR IN ANY WAY SUPPLIED THE SAID DRAWINGS, SPECIFICATIONS OR OTHER DATA IS NOT TO BE REGARDED BY IMPLICATION OR OTHERWISE AS IN ANY MANNER LICENSING THE HOLDER OR ANY OTHER PERSON OR CORPORATION, OR CONVEYING ANY RIGHTS OR PERMISSION TO MANUFACTURE, USE, OR SELL ANY PATENTED INVENTION THAT MAY IN ANY WAY BE RELATED THERETO.

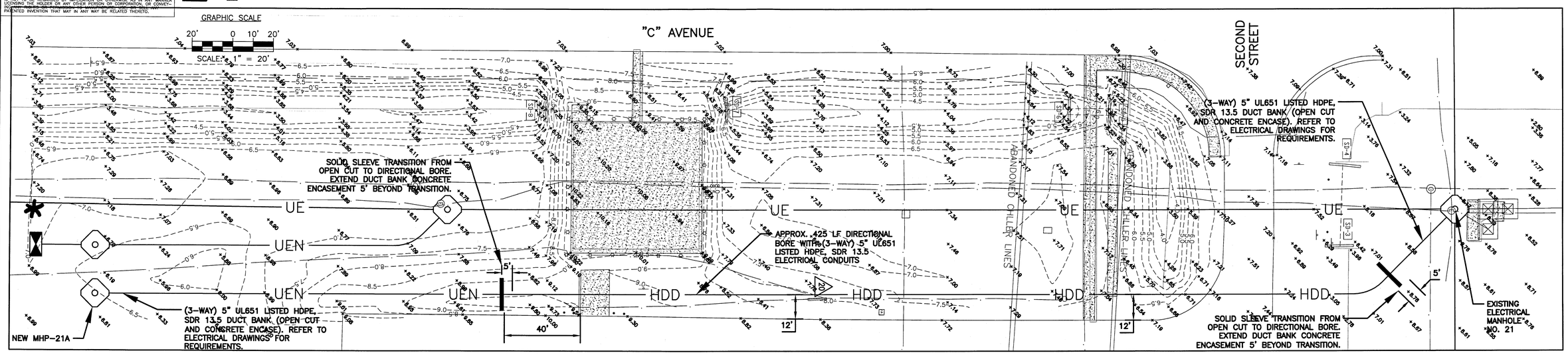


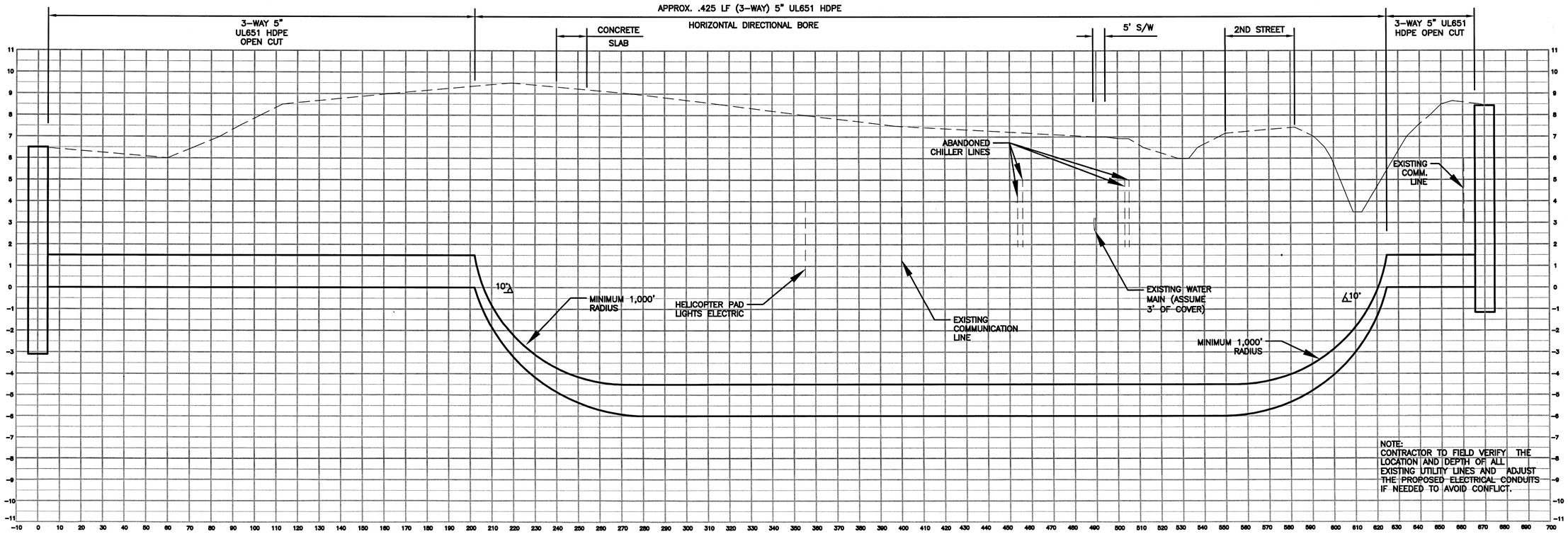


## SITE PLAN – AREA E

SCALE 1" = 20' – 0"

**SPECIFIC NOTES:**

A. REFER TO DWG. C-001 FOR GENERAL NOTES.

NOTE:
CONTRACTOR SHALL PROVIDE EROSION CONTROL/SILT FENCE AT ALL STORM SEWER STRUCTURES LOCATED WITHIN AND IMMEDIATELY DOWNSTREAM OF THE PROJECT WORK AREAS. REFER TO DETAIL SHEET C-501.

E01-79K39135

SHEET 5 OF 22

C-403

| SYM. | ZONE | DESCRIPTION | DATE | APPROVED |
|---|---|---|---|---|

REVISIONS

URS
7650 West Courtney Campbell Causeway
Suite 700
Tampa, Florida 33607
Ph: (813) 286-1711 Fax: (813) 286-6587
FDBPR LICENSE NO. 7285

| SIGNATURES | | DATE |
|---|---|---|
| DRAWN | CAB | 9/24/12 |
| CHECKED | JWG | 9/24/12 |
| SUBMITTED | VICKI M. HARTMAN | 1/15/13 |
| ST OF LICENSURE: FL | | |
| LICENSE NO.: 54611 | | |
| APPROVED | F. WALKER | 1/15/13 |
| | S. MEHTA | 1/17/13 |

NATIONAL AERONAUTICS AND SPACE ADMINISTRATION
JOHN F. KENNEDY SPACE CENTER, NASA
KENNEDY SPACE CENTER, FLORIDA

REVITALIZE MEDIUM VOLTAGE ELECTRICAL DISTRIBUTION SYSTEMS, INDUSTRIAL AND PAYLOAD PROCESSING AREAS

PLAN & PROFILE AREA E

| FILE NO. | SIZE | DWG. NO. |
|---|---|---|
| | F | 79K39135 |
| PCN NO. | 98860 | SHEET |

KSC FORM 1-11A (REV 6/91) (C/G 12/93)

NOTICE – WHEN GOVERNMENT DRAWINGS, SPECIFICATIONS, OR OTHER DATA ARE USED FOR ANY PURPOSE OTHER THAN IN CONNECTION WITH A DEFINITELY RELATED GOVERNMENT PROCUREMENT OPERATION, THE UNITED STATES GOVERNMENT THEREBY INCURS NO RESPONSIBILITY NOR ANY OBLIGATION WHATSOEVER; AND THE FACT THAT THE GOVERNMENT MAY HAVE FORMULATED, FURNISHED, OR IN ANY WAY SUPPLIED THE SAID DRAWINGS, SPECIFICATIONS, OR OTHER DATA, IS NOT TO BE REGARDED BY IMPLICATION OR OTHERWISE AS IN ANY MANNER LICENSING THE HOLDER OR ANY OTHER PERSON OR CORPORATION, OR CONVEYING ANY RIGHTS OR PERMISSION TO MANUFACTURE, USE, OR SELL ANY PATENTED INVENTION THAT MAY IN ANY WAY BE RELATED THERETO.

## EXISTING CABLE SCHEDULE

| CABLE NO. | VOLT | FEEDER | SIZE | FROM | TO | REMARKS |
|---|---|---|---|---|---|---|
| A | 13.2KV | 204/205 | 1–3/C 250 KCIML PILC | VCB 204/205 | MHP–38 | REMOVE AND DISPOSE OF MV CABLES |
| B | 13.2KV | 204/205 | 1–3/C 250 KCIML PILC | VCB 204/205 | MHP–38 | REMOVE AND DISPOSE OF MV CABLES |
| C | 13.2KV | 204/205 | 1–3/C 250 KCIML PILC | MHP–38 | LBS–14–S4 | REMOVE AND DISPOSE OF MV CABLES |
| D | 13.2KV | 204/205 | 1–3/C 250 KCIML PILC | MHP–38 | LBS–14–S3 | REMOVE AND DISPOSE OF MV CABLES |
| E | 13.2KV | 204/205 | 1–3/C 250 KCIML PILC | MHP–38 | VFI–18–S1 | REMOVE AND DISPOSE OF MV CABLES |
| F | 13.2KV | 204/205 | 1–3/C 250 KCIML PILC | MHP–38 | VFI–18–S2 | REMOVE AND DISPOSE OF MV CABLES |
| G | 13.2KV | 202/203 | 3–1/C #4/0 AWG EPR | LBS–13–S3 | MHP–38 (USS–1B/2D) | CUT MV CABLE IN MHP–38. REMOVE MV CABLE BETWEEN LBS–13 AND MHP–38. MV CABLE BETWEEN MHP–38 AND USS–1B/2D TO REMAIN INTACT |
| H | 13.2KV | 204/205 | 3–1/C #4/0 AWG CN EPR | LBS–14–S2 | USS–1A/2C | REMOVE AND DISPOSE OF MV CABLES |
| J | 13.2KV | 204/205 | 3–1/C #4/0 AWG CN EPR | LBS–14–S1 | USS–189 | REMOVE AND DISPOSE OF MV CABLES |
| K | 13.2KV | 202/203 | 1–3/C 500 KCIML PILC | LBS–57–S2 | SS–EE | REMOVE AND DISPOSE OF MV CABLES |
| L | 13.2KV | 204/205 | 1–3/C 500 KCIML PILC | LBS–58–S4 | SS–EE | REMOVE AND DISPOSE OF MV CABLES |
| M | 13.2KV | 202/203 | 1–3/C 500 KCIML PILC | SS–EE | MH–83 | REMOVE AND DISPOSE OF MV CABLES |
| N | 13.2KV | 204/205 | 1–3/C 500 KCIML PILC | SS–EE | MH–83 | REMOVE AND DISPOSE OF MV CABLES |
| P | 13.2KV | 202/203 | 1–3/C 750 KCIML PILC | MH–83 | VFI–19–S4 | REMOVE AND DISPOSE OF MV CABLES |
| R | 13.2KV | 204/205 | 1–3/C 750 KCIML PILC | MH–83 | VFI–18–S3 | REMOVE AND DISPOSE OF MV CABLES |
| S | 13.2KV | 202/203 | 1–3/C 500 KCMIL PILC | MH–83 | MV PULL BOX "WK" | REMOVE AND DISPOSE OF MV CABLES |
| T | 13.2KV | 204/205 | 1–3/C 500 KCMIL PILC | MH–83 | MV PULL BOX "WK" | REMOVE AND DISPOSE OF MV CABLES |
| U | 13.2KV | 202/203 | 3–1/C 350 KCMIL CN EPR | LBS–13–S1 | MHP–39 (LBS–29–S4) | CUT MV CABLE IN MHP–39. REMOVE MV CABLE BETWEEN LBS–13 AND MHP–39. MV CABLE BETWEEN MHP–39 AND LBS–29 TO REMAIN INTACT |
| V | 13.2KV | TIE 202/203 204/205 | 3–1/C #4/0 AWG CN EPR | LBS–57–S4 | LBS–58–S1 | REMOVE AND DISPOSE OF MV CABLES |
| W | 13.2KV | TIE 202/203 204/205 | 3–1/C #4/0 AWG CN EPR | T–SS 159A | T–SS 159B | REMOVE AND DISPOSE OF MV CABLES |
| Y | 13.2KV | 209 | 3–1/C 350 KCIML CN EPR | VFI–2–S1 | LBS–4–S2 | CUT MV CABLE IN MHP–20. REMOVE MV CABLE BETWEEN VFI–2 AND MHP–20. MV CABLE BETWEEN MHP–20 AND LBS–4 TO REMAIN INTACT. |
| Z | 13.2KV | 202/203 | 3–1/C 350 KCMIL CN EPR | MHP–68B (LBS–29–S5) | LBS–80–S1 | REMOVE MV CABLE BETWEEN LBS–80 AND MHP–68B |
| AA | 13.2KV | 202/203 | 3–1/C #4/0 AWG XLP | LBS–80–S2 | SS–117B | REMOVE AND DISPOSE OF MV CABLES |
| AB | 13.2KV | 202/203 | 3–1/C #4/0 AWG XLP | LBS–80–S3 | SS–118A | REMOVE AND DISPOSE OF MV CABLES |
| AC | 13.2KV | 202/203 | 3–1/C 350 KCMIL ?? | LBS–80–S5 | SS–117A PRI SW COMPT | REMOVE AND DISPOSE OF MV CABLES |
| AD | 13.2KV | 101 | 1–3/C 350 KCMIL PILC | VFI–89–S4 | LBS–72–S2 | REMOVE AND DISPOSE OF MV CABLES |
| AE | 13.2KV | 101 | 1–3/C 350 KCMIL PILC | LBS–72–S3 | LBS–17–S2 | REMOVE AND DISPOSE OF MV CABLES |
| AF | 13.2KV | 102 | 1–3/C 350 KCMIL PILC | VCB 102 | LBS–407–S1 | REMOVE AND DISPOSE OF MV CABLES AND DUCTBANK |
| AG | 13.2KV | 102 | 1–3/C 350 KCMIL PILC | LBS–407–S2 | LBS–44–S2 | REMOVE AND DISPOSE OF MV CABLES |
| AH | 13.2KV | TIE 101–102 | 1–3/C 350 KCMIL PILC | LBS–44–S3 | LBS–72–S6 | REMOVE AND DISPOSE OF MV CABLES |
| AJ | 13.2KV | 101 | 1–3/C 350 KCMIL PILC | LBS–72–S1 | MHP–64 | REMOVE MV CABLE BETWEEN LBS–72 AND MHP–64 |
| AK | 13.2KV | 204/205 | 1–3/C 350 KCMIL PILC | VFI–63–S4 | SS–D, SS–E, & SS–F | REMOVE AND DISPOSE OF MV CABLES |
| AL | 13.2KV | 202/203 | 1–3/C 350 KCMIL PILC | VFI–65–S6 | SS–D, SS–E, & SS–F | REMOVE AND DISPOSE OF MV CABLES |
| AM | 13.2KV | 204/205 | 1–3/C 350 KCMIL PILC | VFI–63–S5 | SS–B & SS–C | REMOVE AND DISPOSE OF MV CABLES |
| AN | 13.2KV | 202/203 | 1–3/C 350 KCMIL PILC | VFI–65–S3 | SS–B & SS–C | REMOVE AND DISPOSE OF MV CABLES |
| AP | 13.2KV | 215 | 3–1/C 350 KCMIL CN EPR | MHP–70 | SS–119 (B SIDE) | REMOVE MV CABLE BETWEEN MHP–70 AND SS–119 (B SIDE) C |
| AR | 13.2KV | 215 | 3–1/C 350 KCMIL CN EPR | MHP–70 | SS–119 (B SIDE) | REMOVE MV CABLE BETWEEN MHP–70 AND SS–119 (B SIDE) C |
| AS | 13.2KV | 213 | 3–1/C 350KCMIL CN EPR | MHP–70 | SS–119 (A SIDE) | REMOVE MV CABLE BETWEEN MHP–70 AND SS–119 (A SIDE) C |
| AT | 13.2KV | 213 | 3–1/C 350KCMIL CN EPR | MHP–70 | SS–119 (A SIDE) | REMOVE MV CABLE BETWEEN MHP–70 AND SS–119 (A SIDE) C |
| AU | 13.2KV | N/A | 1–3/C 350 KCMIL PILC | MHP–63 | MHP–83 | REMOVE ABANDONED MV CABLES |
| AV | 13.2KV | 101 | 1–3/C 350 KCMIL PILC | VCB 101 | MHP–9 | REMOVE AND DISPOSE OF MV CABLES AND DUCTBANK |
| AW | 13.2KV | 101 | 3–1/C 350 KCMIL EPR | MHP–9 | VFI–89–S1 | REMOVE AND DISPOSE OF MV CABLES |
| AY | 13.2KV | 102 | 1–3/C 350 KCMIL PILC | LBS–44–S4 | VFI–62–S1 | REMOVE AND DISPOSE OF MV CABLES |
| AZ | 13.2KV | TIE 202/203 204/205 | 3–1/C 350 KCMIL EPR | VFI–63–S1 | VFI–65–S2 | REMOVE AND DISPOSE OF MV CABLES |
| BA | 13.2KV | 202/203 | 3–1/C #4/0 AWG CN EPR | MV PULL BOX "WK" | MV SPLICE BOX "WL" | MV CABLES TO REMAIN INTACT |
| BB | 13.2KV | 204/205 | 3–1/C #4/0 AWG CN EPR | MV PULL BOX "WK" | MV SPLICE BOX "WL" | MV CABLES TO REMAIN INTACT |
| BC | 2.4KV | | 3–1/C #4/0 AWG CLOTH COVERED COPPER | SS–C | MCC–C | REMOVE AND DISPOSE OF MV CABLES |
| BD | 2.4KV | | 3–1/C #4/0 AWG CLOTH COVERED COPPER | SS–C | MCC–C | REMOVE AND DISPOSE OF MV CABLES |
| | | | | | | |
| | | | | | | |

## EXISTING CABLE SCHEDULE

| CABLE NO. | VOLT | FEEDER | SIZE | FROM | TO | REMARKS |
|---|---|---|---|---|---|---|
| CA | 4.16KV | 213 | 3–1/C 4/0 AWG 5KV TS EPR AND 1/C 2/0 AWG 600V GND | SS 119 4B | TRANSFORMER T–MCCD1 | REMOVE AND DISPOSE OF MV CABLES |
| CB | 4.16KV | 213 | 3–1/C 4/0 AWG 5KV TS EPR AND 1/C 2/0 AWG 600V GND | SS 119 3B | TRANSFORMER T–MCCD2 | REMOVE AND DISPOSE OF MV CABLES |
| CC | 4.16KV | 213 | 3–1/C 350 KCMIL 5KV TS EPR AND 1/C 2/0 AWG 600V GND | SS 119 4A | CHILLER 6 STARTER (1500 HP) | REMOVE AND DISPOSE OF MV CABLES |
| CD | 4.16KV | 213 | 3–1/C 350 KCMIL 5KV TS EPR AND 1/C 2/0 AWG 600V GND | SS 119 5B | CHILLER 3 STARTER (1500 HP) | REMOVE AND DISPOSE OF MV CABLES |
| CE | 4.16KV | 213 | 3–1/C 500 KCMIL 5KV TS EPR AND 1/C 2/0 AWG 600V GND | SS 119 6B | CHILLER 1 STARTER (2000 HP) | REMOVE AND DISPOSE OF MV CABLES |
| CF | 4.16KV | 215 | 3–1/C 500 KCMIL 5KV TS EPR AND 1/C 2/0 AWG 600V GND | SS 119 8B | CHILLER 2 STARTER (2000 HP) | REMOVE AND DISPOSE OF MV CABLES |
| CG | 4.16KV | 215 | 3–1/C 4/0 AWG 5KV TS EPR AND 1/C 2/0 AWG 600V GND | SS 119 7B | TRANSFORMER T–MCCD6 | REMOVE AND DISPOSE OF MV CABLES |
| CH | 4.16KV | 215 | 3–1/C 350 KCMIL 5KV TS EPR AND 1/C 2/0 AWG 600V GND | SS 119 8A | TRANSFORMER T–MCCD7 | REMOVE AND DISPOSE OF MV CABLES |
| CJ | 4.16KV | 215 | 3–1/C 350 KCMIL 5KV TS EPR AND 1/C 2/0 AWG 600V GND | SS 119 9B | CHILLER 4 STARTER (1500 HP) | REMOVE AND DISPOSE OF MV CABLES |
| CK | 4.16KV | 215 | 3–1/C 350 KCMIL 5KV TS EPR AND 1/C 2/0 AWG 600V GND | SS 119 9A | CHILLER 5 STARTER (1500 HP) | REMOVE AND DISPOSE OF MV CABLES |
| | | | | | | |
| DA | 480V | | 3–1/C #1/0 AWG | SS–EE | CWP–5 (MCC–A) | REMOVE AND DISPOSE OF LV CABLES WITHIN SS–EE E |
| DB | 480V | | 4–1/C #10 AWG | SS–EE | 10 KVA XFMR | REMOVE AND DISPOSE OF LV CABLES AND 1–1/4" CONDUIT |
| DC | 480V | | 3–1/C #2/0 AWG | SS–EE | LIGHTING CONTACTOR | REMOVE AND DISPOSE OF LV CABLES AND 2" CONDUIT |
| DD | 480V | | 3–1/C 500 KCMIL | SS–EE | MCC–EE | REMOVE AND DISPOSE OF LV CABLES |
| DE | 480V | | 3–1/C #4/0 AWG AND 1/C #4 AWG GND | SS–D | MHP–73 (M7–355 IOZ RECEPT.) | REMOVE AND DISPOSE OF LV CABLES F |
| DF | 480V | | 3–1/C 250 KCMIL AND 1/C #4 AWG GND | SS–D | NEW HANDHOLE | REMOVE AND DISPOSE OF LV CABLES G |
| DG | 480V | | 4–1/C 500 KCMIL AND 1/C #3 AWG GND | SS–E | SS–F | REMOVE AND DISPOSE OF LV CABLES AND 4" CONDUIT |
| DH | 480V | | (3) SETS: 3–1/C 500 KCMIL AND 1/C #2/0 AWG GND | SS–E | EXISTING HANDHOLE (MCC–A) | REMOVE AND DISPOSE OF LV CABLES AND 4" CONDUITS H |
| DJ | 480V | | (2) SETS: 3–1/C 500 KCMIL, 1/C #3/0 AWG NEUT. AND 1/C #4/0 AWG GND | SS–E | MHP–73 (MCC–E–1–P) | REMOVE AND DISPOSE OF LV CABLES AND 4" CONDUITS J |
| DK | 480V | | 4–1/C 500 KCMIL | SS–F | M7–355 TAP BOX | REMOVE AND DISPOSE OF LV CABLES |
| DL | 480V | | 3–1/C 350 KCMIL AND 1/C #2 AWG GND | SS–F | TRAILER POWER | REMOVE AND DISPOSE OF LV CABLES AND 3" CONDUIT |
| DM | 480V | | 2–1/C #10 AWG AND 1/C #10 AWG GND | MCC–EE–E2 | XFMR U2 | REMOVE AND DISPOSE OF LV CABLES AND 1" CONDUIT |

## SPECIFIC NOTES:

A. EXCEPT AS OTHERWISE NOTED, CONDUITS ASSOCIATED WITH CABLES IDENTIFIED TO BE REMOVED AS PART OF THIS PROJECT SHALL BE LEFT INTACT.

B. IDENTIFY ALL EXISTING (TO REMAIN) AND NEW CABLES AFFECTED BY THIS PROJECT WITH NEW TAGS PER DETAIL 2 ON DWG. E–512. CABLES ARE TO BE LABELED IN ALL MANHOLES AND AT ALL TERMINATION POINTS.

C. REMOVE CONDUCTORS BETWEEN MHP–70 AND MHP–69 DURING SCHEDULED SHUT DOWN ASSOCIATED WITH ENERGIZING NEW LOAD BREAK SWITCHES LBS–73 AND LBS–74. REMOVE CONDUCTORS BETWEEN MHP–69 AND SS–119 AS PART OF THE DEMOLITION OF SUBSTATION SS–119.

D. REMOVE AND PROPERLY DISPOSE OF PILC CABLE POTHEAD TERMINATIONS AT SWITCHING EQUIPMENT. PILC CABLES MAY HAVE XLP OR EPR CONNECTIONS TO SWITCHING EQUIPMENT INDICATED USING A TRIFURCATING SPLICE AT THE NEAREST MANHOLE. REMOVE THE TRIFURCATING SPLICE AND ALL SUCH EPR OR XLP CABLES WITH THE PILC CABLE TO BE REMOVED.

E. EXISTING CABLE UNDERGROUND BETWEEN SS–EE AND CONDENSER WATER PUMP (CWP–5) SHALL BE RETAINED FOR RE–USE. ALLOW ADEQUATE LENGTH OF RETAINED CABLE AT SS–EE FOR SPLICING TO NEW CIRCUIT.

F. EXISTING CABLE UNDERGROUND BETWEEN MHP–73 AND IOZ RECEPTACLE WITHIN M7–355 SHALL BE RETAINED FOR RE–USE. ALLOW ADEQUATE LENGTH OF RETAINED CABLE AT MHP–73 FOR SPLICING TO NEW CIRCUIT.

G. INSTALL NEW HANDHOLE INDICATED ON DWG. E–413. EXISTING CABLE UNDERGROUND BETWEEN NEW HANDHOLE AND THE LOAD SHALL BE RETAINED FOR RE–USE. ALLOW ADEQUATE LENGTH OF RETAINED CABLE AT NEW HANDHOLE FOR SPLICING TO NEW CIRCUIT.

H. EXISTING CABLE UNDERGROUND BETWEEN EXISTING HANDHOLE AND MCC–A SHALL BE RETAINED FOR RE–USE. ALLOW ADEQUATE LENGTH OF RETAINED CABLE AT EXISTING HANDHOLE FOR SPLICING TO NEW CIRCUIT.

J. EXISTING CABLE UNDERGROUND BETWEEN MHP–73 AND MCC–E–1–P WITHIN M7–355 SHALL BE RETAINED FOR RE–USE. ALLOW ADEQUATE LENGTH OF RETAINED CABLE AT MHP–73 FOR SPLICING TO NEW CIRCUIT.

E01–79K39135

SHEET 6 OF 22

| SYM. | ZONE | DESCRIPTION | DATE | APPROVED |
|---|---|---|---|---|
| | | REVISIONS | | |

URS
7650 West Courtney Campbell Causeway
Suite 700
Tampa, Florida 33607
Ph: (813) 286–1711 Fax: (813) 286–6587
FDBPR LICENSE NO. 7285

| SIGNATURES | | DATE |
|---|---|---|
| DRAWN | TRS | 9/24/12 |
| CHECKED | GSK | 9/24/12 |
| SUBMITTED | GLENN H. DAVIS ST OF LICENSURE: FL LICENSE NO: 66443 | |
| APPROVED | F. WALKER | |
| | S. MEHTA | |

NATIONAL AERONAUTICS AND SPACE ADMINISTRATION
JOHN F. KENNEDY SPACE CENTER, NASA
KENNEDY SPACE CENTER, FLORIDA

REVITALIZE MEDIUM VOLTAGE ELECTRICAL DISTRIBUTION SYSTEMS, INDUSTRIAL AND PAYLOAD PROCESSING AREAS

EXISTING CABLE SCHEDULE

E–003

| FILE NO. | SIZE | DWG. NO. |
|---|---|---|
| | F | 79K39135 |
| PCN NO. 98860 | | SHEET 35 |

T:\NASA KSC\Task No. 1\Drawings\E-003 EXISTING CABLE SCHEDULE.dwg 01/14/2013 1:26

KSC FORM 1–11A (REV 6/91) (C/G 12/93)

NOTICE – WHEN GOVERNMENT DRAWINGS, SPECIFICATIONS, OR OTHER DATA ARE USED FOR ANY PURPOSE OTHER THAN IN CONNECTION WITH A DEFINITELY RELATED GOVERNMENT PROCUREMENT OPERATION, THE UNITED STATES GOVERNMENT THEREBY INCURS NO RESPONSIBILITY NOR ANY OBLIGATION WHATSOEVER; AND THE FACT THAT THE GOVERNMENT MAY HAVE FORMULATED, FURNISHED, OR IN ANY WAY SUPPLIED THE SAID DRAWINGS, SPECIFICATIONS, OR OTHER DATA IS NOT TO BE REGARDED BY IMPLICATION OR OTHERWISE, AS IN ANY MANNER LICENSING THE HOLDER OR ANY OTHER PERSON OR CORPORATION, OR CONFERRING NO ANY RIGHTS OR PERMISSION TO MANUFACTURE, USE, OR SELL ANY PATENTED INVENTION THAT MAY IN ANY WAY BE RELATED THERETO.

## MODIFIED CABLE SCHEDULE

| CABLE NO. | VOLT | FEEDER | SIZE | FROM | TO | REMARKS |
|---|---|---|---|---|---|---|
| 1 | 13.2KV | 204/205 | 3-1/C 350 KCMIL 15KV CN EPR | VCB 204/205 | VFI-14-S1 | PROVIDE CABLE |
| 2 | 13.2KV | 204/205 | 3-1/C 350 KCMIL 15KV CN EPR | VCB 204/205 | VFI-14-S2 | PROVIDE CABLE |
| 3 | 13.2KV | TIE 204/205 212 | 3-1/C 350 KCMIL 15KV CN EPR | VFI-14-S6 | VFI-12-S2 | PROVIDE CABLE |
| 4 | 13.2KV | 204/205 | 3-1/C 350 KCMIL 15KV CN EPR | VFI-14-S5 | VFI-31-S1 | PROVIDE CABLE |
| 5 | 13.2KV | 202/203 | 3-1/C 350 KCMIL 15KV CN EPR | LBS-13-S1 | VFI-32-S2 | PROVIDE CABLE |
| 6 | 13.2KV | 204/205 | 3-1/C 350 KCMIL 15KV CN EPR | VFI-14-S3 | VFI-18-S1 | PROVIDE CABLE |
| 7 | 13.2KV | 202/203 | 3-1/C #4/0 AWG 15KV CN EPR | VFI-13-S3 | MHP-38 (SS-1B/2D) | PROVIDE CABLE BETWEEN VFI-13 AND MHP-38 SPLICE TO EXIST. CABLE 'G' IN MHP-38 |
| 8 | 13.2KV | 204/205 | 3-1/C #4/0 AWG 15KV CN EPR | VFI-14-S4 | USS-1A | PROVIDE CABLE |
| 9 | 13.2KV | 204/205 | 3-1/C #4/0 AWG 15KV CN EPR | VFI-31-S5 | USS-189 | PROVIDE CABLE |
| 10 | 13.2KV | 204/205 | 3-1/C #4/0 AWG 15KV CN EPR | VFI-31-S3 | SS-159B | PROVIDE CABLE, CONDUIT, AND DUCT BANK |
| 11 | 13.2KV | 202/203 | 3-1/C #4/0 AWG 15KV CN EPR | VFI-32-S3 | SS-159A | PROVIDE CABLE, CONDUIT, AND DUCT BANK |
| 12 | 13.2KV | 202/203 | 3-1/C 350 KCMIL 15KV CN EPR | VFI-32-S1 | LBS-29-S4 | PROVIDE CABLE BETWEEN VFI-32 AND MHP-39 SPLICE TO EXIST. CABLE 'U' IN MHP-39 |
| 13 | 13.2KV | 202/203 | 3-1/C #4/0 AWG 15KV CN EPR | VFI-70-S4 | LBS-57-S2 | PROVIDE CABLE |
| 14 | 13.2KV | 202/203 | 3-1/C #4/0 AWG 15KV CN EPR | VFI-19-S4 | VFI-70-S1 | PROVIDE CABLE |
| 16 | 13.2KV | 204/205 | 3-1/C #4/0 AWG 15KV CN EPR | LBS-58-S4 | VFI-69-S4 | PROVIDE CABLE |
| 17 | 13.2KV | 204/205 | 3-1/C #4/0 AWG 15KV CN EPR | VFI-69-S1 | VFI-18-S3 | PROVIDE CABLE |
| 18 | 13.2KV | 204/205 | 3-1/C #4/0 AWG 15KV CN EPR | VFI-69-S3 | WK/WL SPLICE BOX | PROVIDE CABLE |
| 19 | 13.2KV | 202/203 | 3-1/C #4/0 AWG 15KV CN EPR | VFI-70-S3 | WK/WL SPLICE BOX | PROVIDE CABLE |
| 20 | 13.2KV | 202/203 | 3-1/C 350 KCMIL 15KV CN EPR | VFI-80-S2 | MHP-68B | PROVIDE CABLE BETWEEN MHP-38B AND VFI-80, SPLICE TO EXIST. CABLE 'Z' IN MHP-68B |
| 21 | 13.2KV | 202/203 | 3-1/C #4/0 AWG 15KV CN EPR | VFI-80-S3 | SS-117B | PROVIDE CABLE |
| 22 | 13.2KV | 202/203 | 3-1/C #4/0 AWG 15KV CN EPR | VFI-80-S4 | SS-118A | PROVIDE CABLE |
| 23 | 13.2KV | 204/205 | 3-1/C #4/0 AWG 15KV CN EPR | VFI-63-S4 | SS-A | PROVIDE CABLE |
| 24 | 13.2KV | 202/203 | 3-1/C #4/0 AWG 15KV CN EPR | VFI-65-S6 | SS-B | PROVIDE CABLE |
| 25 | 13.2KV | TIE 202/203 204/205 | 3-1/C #4/0 AWG 15KV CN EPR | T-SS A | T-SS B | PROVIDE CABLE, CONDUIT, AND DUCT BANK |
| 26 | 13.2KV | TIE 202/203 204/205 | 3-1/C #4/0 AWG 15KV CN EPR | LBS-57-S4 | LBS-58-S1 | PROVIDE CABLE |
| 27 | 13.2KV | 209 | 3-1/C 350 KCMIL 15KV CN EPR | VFI-2-S1 | VFI-71-S1 | PROVIDE CABLE, CONDUIT, AND DUCT BANK |
| 28 | 13.2KV | 209 | 3-1/C 350 KCMIL 15KV CN EPR | VFI-71-S2 | MHP-20 | PROVIDE CABLE, CONDUIT, AND DUCT BANK. PROVIDE CABLE BETWEEN MHP-20 AND VFI-71. SPLICE EXISTING CABLE TO LBS-4 IN MHP-20. |
| 29 | 13.2KV | TIE 209 202/203 | 3-1/C 350 KCMIL 15KV CN EPR | VFI-13-S2 | VFI-71-S4 | PROVIDE CABLE, CONDUIT, AND DUCT BANK |
| 31 | 13.2KV | 102 | 3-1/C 350 KCMIL 15KV CN EPR | VCB 102 | LBS-407-S1 | PROVIDE CABLE |
| 32 | 13.2KV | 102 | 3-1/C 350 KCMIL 15KV CN EPR | LBS-407-S2 | LBS-44-S2 | PROVIDE CABLE |
| 33 | 13.2KV | TIE 101-102 | 3-1/C 350 KCMIL 15KV CN EPR | LBS-44-S3 | LBS-72-S6 | PROVIDE CABLE |
| 34 | 13.2KV | 101 | 3-1/C 350 KCMIL 15KV CN EPR | VCB 101 | VFI-89-S1 | PROVIDE CABLE |
| 35 | 13.2KV | 101 | 3-1/C 350 KCMIL 15KV CN EPR | VFI-89-S4 | LBS-72-S2 | PROVIDE CABLE |
| 36 | 13.2KV | 204/205 | 3-1/C 350 KCMIL 15KV CN EPR | VFI-63-S1 | MHP-64 (SS-CRB) | PROVIDE CABLE BETWEEN VFI-63 AND MHP-64, SPLICE TO EXIST. CABLE 'AJ' IN MHP-64 |
| 37 | 13.2KV | 101 | 3-1/C 350 KCMIL 15KV CN EPR | LBS-72-S3 | LBS-17-S2 | PROVIDE CABLE |
| 38 | 13.2KV | 102 | 3-1/C 350 KCMIL 15KV CN EPR | LBS-44-S4 | VFI-62-S1 | PROVIDE CABLE |
| 39 | 13.2KV | TIE 202/203 204/205 | 3-1/C #4/0 AWG 15KV CN EPR | VFI-63-S6 | VFI-65-S2 | PROVIDE CABLE |
| 40 | 13.2KV | 212 | 3-1/C 350 KCMIL 15KV CN EPR | LBS-79-S3 | VFI-12-S1 | PROVIDE CABLE |
| 41 | 13.2KV | 213 | 3-1/C 350 KCMIL 15KV CN EPR | MHP-70 | LBS-73-S1 | PROVIDE CABLE, CONDUIT AND DUCT BANK |
| 42 | 13.2KV | 213 | 3-1/C 350 KCMIL 15KV CN EPR | MHP-70 | LBS-73-S2 | PROVIDE CABLE, CONDUIT AND DUCT BANK |
| 43 | 13.2KV | 215 | 3-1/C 350 KCMIL 15KV CN EPR | MHP-70 | LBS-74-S1 | PROVIDE CABLE, CONDUIT AND DUCT BANK |
| 44 | 13.2KV | 215 | 3-1/C 350 KCMIL 15KV CN EPR | MHP-70 | LBS-74-S2 | PROVIDE CABLE, CONDUIT AND DUCT BANK |
| 45 | 13.2KV | 213 | 3-1/C 350 KCMIL 15KV CN EPR | LBS-73-S5 | SS-119A | PROVIDE CABLE, CONDUIT AND DUCT BANK |
| 46 | 13.2KV | 213 | 3-1/C 350 KCMIL 15KV CN EPR | LBS-73-S6 | SS-119A | PROVIDE CABLE, CONDUIT AND DUCT BANK |
| 47 | 13.2KV | 215 | 3-1/C 350 KCMIL 15KV CN EPR | LBS-74-S5 | SS-119B | PROVIDE CABLE, CONDUIT AND DUCT BANK |
| 48 | 13.2KV | 215 | 3-1/C 350 KCMIL 15KV CN EPR | LBS-74-S6 | SS-119B | PROVIDE CABLE, CONDUIT AND DUCT BANK |
| 49 | 13.2KV | 213 | 3-1/C 350 KCMIL 15KV CN EPR | LBS-73-S3 | MHP-69 | PROVIDE CABLE, CONDUIT AND DUCT BANK; SPLICE TO EXIST. CABLE 'AS' IN MHP-69 |
| 50 | 13.2KV | 213 | 3-1/C 350 KCMIL 15KV CN EPR | LBS-73-S4 | MHP-69 | PROVIDE CABLE, CONDUIT AND DUCT BANK; SPLICE TO EXIST. CABLE 'AT' IN MHP-69 |
| 51 | 13.2KV | 215 | 3-1/C 350 KCMIL 15KV CN EPR | LBS-74-S3 | MHP-69 | PROVIDE CABLE, CONDUIT AND DUCT BANK; SPLICE TO EXIST. CABLE 'AP' IN MHP-69 |
| 52 | 13.2KV | 215 | 3-1/C 350 KCMIL 15KV CN EPR | LBS-74-S4 | MHP-69 | PROVIDE CABLE, CONDUIT AND DUCT BANK; SPLICE TO EXIST. CABLE 'AR' IN MHP-69 |
| 53 | 13.2KV | 213 | (2) SETS: 3-1/C 350 KCMIL 15KV CN EPR | SS-119A COMPARTMENT 1A | TRANS. T-SS119A PRIMARY | PROVIDE CABLE, CONDUIT, DUCT BANK |
| 54 | 13.2KV | 215 | (2) SETS: 3-1/C 350 KCMIL 15KV CN EPR | SS-119B COMPARTMENT 16A | TRANS. T-SS119B PRIMARY | PROVIDE CABLE, CONDUIT, DUCT BANK |
| 61 | 4.16KV | 213 | (4) SETS: 3-1/C 500 KCMIL 5KV CN EPR | TRANS. T-SS119A SECONDARY | SS-119A COMPARTMENT 2B | PROVIDE CABLE, CONDUIT, DUCT BANK |

## MODIFIED CABLE SCHEDULE

| CABLE NO. | VOLT | FEEDER | SIZE | FROM | TO | REMARKS |
|---|---|---|---|---|---|---|
| 62 | 4.16KV | 215 | (4) SETS: 3-1/C 500 KCMIL 5KV CN EPR | TRANS. T-SS119B SECONDARY | SS-119B COMPARTMENT 15B | PROVIDE CABLE, CONDUIT, DUCT BANK |
| 63 | 4.16KV | TIE 213, 215 | (4) SETS: 3-1/C 500 KCMIL 5KV CN EPR | SS-119A COMPARTMENT 6A | SS-119B COMPARTMENT 11A | PROVIDE CABLE, CONDUIT, DUCT BANK |
| 65 | 4.16KV | 215 | 3-1/C 500 KCMIL 5KV CN EPR | SS-119B COMPARTMENT 14B | EXIST. TRANS. T-MCCD7 | PROVIDE CABLE, CONDUIT, DUCT BANK |
| 66 | 4.16KV | 215 | 3-1/C 500 KCMIL 5KV TS EPR AND 1/C 2/0 AWG 600V EPR GND | SS-119B COMPARTMENT 14A | EXIST. CHILLER 2 MOTOR STARTER (2000HP) | PROVIDE CABLE, CONDUIT, DUCT BANK |
| 67 | 4.16KV | 215 | 3-1/C 350 KCMIL 5KV TS EPR AND 1/C 2/0 AWG 600V EPR GND | SS-119B COMPARTMENT 13B | EXIST. CHILLER 4 MOTOR STARTER (1500HP) | PROVIDE CABLE, CONDUIT, DUCT BANK |
| 68 | 4.16KV | 215 | 3-1/C 350 KCMIL 5KV TS EPR AND 1/C 2/0 AWG 600V EPR GND | SS-119B COMPARTMENT 13A | EXIST. CHILLER 5 MOTOR STARTER (1500HP) | PROVIDE CABLE, CONDUIT, DUCT BANK |
| 69 | 4.16KV | 213 | 3-1/C 350 KCMIL 5KV TS EPR AND 1/C 2/0 AWG 600V EPR GND | SS-119A COMPARTMENT 5A | EXIST. CHILLER 6 MOTOR STARTER (1500HP) | PROVIDE CABLE, CONDUIT, DUCT BANK |
| 70 | 4.16KV | 213 | 3-1/C 500 KCMIL 5KV TS EPR AND 1/C 2/0 AWG 600V EPR GND | SS-119A COMPARTMENT 5B | EXIST. CHILLER 1 MOTOR STARTER (2000HP) | PROVIDE CABLE, CONDUIT, DUCT BANK |
| 71 | 4.16KV | 213 | 3-1/C 350 KCMIL 5KV TS EPR AND 1/C 2/0 AWG 600V EPR GND | SS-119A COMPARTMENT 4A | EXIST. CHILLER 3 MOTOR STARTER (1500HP) | PROVIDE CABLE, CONDUIT, DUCT BANK |
| 72 | 4.16KV | 213 | 3-1/C 4/0 AWG 5KV TS EPR AND 1/C 2/0 AWG 600V EPR GND | SS-119A COMPARTMENT 4B | EXIST. TRANS. T-MCCD1 | PROVIDE CABLE, CONDUIT, DUCT BANK |
| 73 | 4.16KV | 213 | 3-1/C 4/0 AWG 5KV TS EPR AND 1/C 2/0 AWG 600V EPR GND | SS-119A COMPARTMENT 3A | EXIST. TRANS. T-MCCD2 | PROVIDE CABLE, CONDUIT, DUCT BANK |
| 74 | 4.16KV | 215 | 3-1/C 4/0 AWG 5KV TS EPR AND 1/C 2/0 AWG 600V EPR GND | SS-119B COMPARTMENT 12A | EXIST. TRANS. T-MCCD6 | PROVIDE CABLE, CONDUIT, DUCT BANK |
| 81 | 480V | | (6) SETS: 3-1/C 500KCMIL RHW-2 PH AND 1-1/C 500KCMIL RHW-2 GSC | T-SS227A | SS-227A | PROVIDE WIRE, CONDUIT, DUCT BANK |
| 82 | 480V | | (3) SETS: 3-1/C 500KCMIL RHW-2 PH, AND 1/C #4/0 GND | SS-227A | MCC-A IACP | PROVIDE WIRE, CONDUIT, DUCT BANK |
| 83 | 480V | | 3-#4 AWG RHW-2 PH. AND 1-#4 AWG RHW-2 GND | SS-227A | FP ATS | PROVIDE WIRE, CONDUIT, DUCT BANK B |
| 84 | N/A | | F | SS-227B | M7-355 COMM. RM. | |
| 85 | 480V | | 3-1/C #4/0 RHW-2 PH, AND 1/C #4 GND | SS-227B | IOZ RECEPT. | PROVIDE WIRE, CONDUIT, DUCT BANK SPLICE TO EXISTING CABLE IN MHP-73 |
| 86 | 480V | | (6) SETS: 3-1/C 500KCMIL RHW-2 PH AND 1-1/C 500KCMIL RHW-2 GSC | T-SS227B | SS-227B | PROVIDE WIRE, CONDUIT, DUCT BANK |
| 87 | 480V | | (2) SETS: 3-1/C 500KCMIL RHW-2 PH, 1/C 500KCMIL NEUT., AND 1/C #2/0 AWG GND | SS-227B | PNL B2 | PROVIDE WIRE, CONDUIT, DUCT BANK |
| 88 | 480V | | (2) SETS: 3-1/C 500KCMIL RHW-2 PH, 1/C 500KCMIL NEUT., AND 1/C #2/0 AWG GND | SS-227B | SWBD B1 | PROVIDE WIRE, CONDUIT, DUCT BANK |
| 89 | 480V | | 3-1/C #2 AWG THWN-2 PH, AND 1-1/C #2 AWG GSC | PNL B2 | TRANSF. T-B2 | PROVIDE WIRE, LFMC CONDUIT |
| 90 | 480V | | 4-1/C #2 AWG THWN-2 PH, AND 1-1/C #2 AWG THWN-2 GSC | TRANSF. T-B2 | PANEL B3 VIA LIGHTING CONTACTOR | PROVIDE WIRE, LFMC CONDUIT |
| 91 | 480V | | (2) SETS: 3-1/C 500KCMIL RHW-2 PH, 1/C #3/0 NEUT., AND 1/C #4/0 AWG GND | SS-227B | MCC E-1-P | PROVIDE WIRE, CONDUIT, DUCT BANK |
| 92 | 480V | | (6) SETS: 3-1/C 500KCMIL RHW-2 PH, 1/C 500KCMIL NEUT., AND 1/C 500KCMIL GND | SS-227A | SS-227B | PROVIDE WIRE, CONDUIT, DUCT BANK |
| 93 | 480V | | 2-1/C #2 AWG THWN-2 AND 1/C #2 AWG GND | EXISTING WIREWAY | ENCLOSED CIRCUIT BREAKER | PROVIDE CABLE, CONDUIT E |
| 94 | 480V | | 2-1/C #10 AWG THWN-2 AND 1/C #10 AWG GND | ENCLOSED CIRCUIT BREAKER | XFMR U2 | PROVIDE CABLE, CONDUIT |
| 101 | 13.2KV | 204/205 | 3-1/C #2 AWG 15KV TS EPR, MV-90 AND #2 AWG BARE GND | VFI-31-S6 | VFI-31 PT CABINET | PROVIDE CABLE, CONDUIT |
| 102 | 120V | N/A | 3-1/C #12 AWG RHW-2 PH, AND 1-1/C #12 AWG RHW-2 GND | VFI-31 PT CABINET | METERING TERMINAL BOX | PROVIDE CABLE, CONDUIT |
| 103 | 120V | N/A | 3-1/C #10 AWG RHW-2 PH, 1-1/C AND #10 AWG RHW-2 NEUT. | VFI-31-S3 CTs | METERING TERMINAL BOX | PROVIDE CABLE, CONDUIT |
| 104 | 120V | N/A | 3-1/C #12 AWG RHW-2 PH, AND 1-1/C #12 AWG RHW-2 GND | METERING TERMINAL BOX | VFI-31 KWH METER | PROVIDE CABLE, CONDUIT |
| 105 | 120V | N/A | 3-1/C #10 AWG RHW-2 PH, 1-1/C AND #10 AWG RHW-2 NEUT. | METERING TERMINAL BOX | VFI-31 KWH METER | PROVIDE CABLE, CONDUIT |
| 106 | 13.2KV | 202/203 | 3-1/C #2 AWG 15KV TS EPR, MV-90 AND #2 AWG BARE GND | VFI-32-S6 | VFI-32 PT CABINET | PROVIDE CABLE, CONDUIT |
| 107 | 120V | N/A | 3-1/C #12 AWG RHW-2 PH, AND 1-1/C #12 AWG RHW-2 GND | VFI-32 PT CABINET | METERING TERMINAL BOX | PROVIDE CABLE, CONDUIT |
| 108 | 120V | N/A | 3-1/C #10 AWG RHW-2 PH, 1-1/C AND #10 AWG RHW-2 NEUT. | VFI-32-S3 CTs | METERING TERMINAL BOX | PROVIDE CABLE, CONDUIT |
| 109 | 120V | N/A | 3-1/C #12 AWG RHW-2 PH, AND 1-1/C #12 AWG RHW-2 GND | METERING TERMINAL BOX | VFI-32 KWH METER | PROVIDE CABLE, CONDUIT |
| 110 | 120V | N/A | 3-1/C #10 AWG RHW-2 PH, 1-1/C AND #10 AWG RHW-2 NEUT. | METERING TERMINAL BOX | VFI-32 KWH METER | PROVIDE CABLE, CONDUIT |

## SPECIFIC NOTES:

A. IDENTIFY ALL EXISTING AND NEW CABLES AFFECTED BY THIS PROJECT WITH NEW TAGS PER DETAIL 2 ON DWG. E-512.

B. FEEDER PHASE AND GROUND WIRES SHALL BE STRANDED COPPER CONDUCTOR, RHW-2 INSULATED, AND 2-HOUR FIRE RATED PER UL 2196. WHERE FEEDER IS ROUTED ABOVE GRADE, INSTALL FEEDER WIRES IN GRS CONDUIT IN ACCORDANCE WITH THE WIRE MANUFACTURER'S PUBLISHED APPLICATION AND INSTALLATION INSTRUCTIONS.

C. REFER TO PANEL SCHEDULES ON DWG. E-641 FOR ADDITIONAL NEW LOW VOLTAGE CABLE AND CONDUIT REQUIREMENTS.

D. REFER TO ENLARGED SITE PLANS FOR NEW CONDUIT AND DUCT BANK REQUIREMENTS AT NEW EQUIPMENT LOCATIONS.

E. TAP TO EXISTING 350A MCC-A CIRCUIT IN EXISTING WIREWAY.

F. REFER TO DWG. E-635 FOR CABLE REQUIREMENTS.

E01-79K39135

SHEET 7 OF 22

E-004

| SYM. | ZONE | DESCRIPTION | DATE | APPROVED |
|---|---|---|---|---|
| | | REVISIONS | | |

URS
7650 West Courtney Campbell Causeway
Suite 700
Tampa, Florida 33607
Ph: (813) 286-1711 Fax: (813) 286-6587
FDBPR LICENSE NO. 7285

| SIGNATURES | | DATE |
|---|---|---|
| DRAWN | TRS | 9/24/12 |
| CHECKED | GSK | 9/24/12 |
| SUBMITTED | GLENN H. DAVIS ST OF LICENSURE: FL LICENSE NO. 66443 | |
| APPROVED | F. WALKER | |
| | S. MEHTA | |

NATIONAL AERONAUTICS AND SPACE ADMINISTRATION
JOHN F. KENNEDY SPACE CENTER, NASA
KENNEDY SPACE CENTER, FLORIDA

REVITALIZE MEDIUM VOLTAGE ELECTRICAL DISTRIBUTION SYSTEMS, INDUSTRIAL AND PAYLOAD PROCESSING AREAS

MODIFIED CABLE SCHEDULE

| FILE NO. | SIZE | DWG. NO. |
|---|---|---|
| | F | 79K39135 |
| PCN NO. 98860 | | SHEET 36 |

NOTICE – WHEN GOVERNMENT DRAWINGS, SPECIFICATIONS, OR OTHER DATA ARE USED FOR ANY PURPOSE OTHER THAN IN CONNECTION WITH A DEFINITELY RELATED GOVERNMENT PROCUREMENT OPERATION, THE UNITED STATES GOVERNMENT THEREBY INCURS NO RESPONSIBILITY NOR ANY OBLIGATION WHATSOEVER; AND THE FACT THAT THE GOVERNMENT MAY HAVE FORMULATED, FURNISHED, OR IN ANY WAY SUPPLIED THE SAID DRAWINGS, SPECIFICATIONS, OR OTHER DATA IS NOT TO BE REGARDED BY IMPLICATION, OR OTHERWISE AS IN ANY MANNER LICENSING THE HOLDER OR ANY OTHER PERSON OR CORPORATION, OR CONVEYING ANY RIGHTS OR PERMISSION TO MANUFACTURE, USE, OR SELL ANY PATENTED INVENTION THAT MAY IN ANY WAY BE RELATED THERETO.

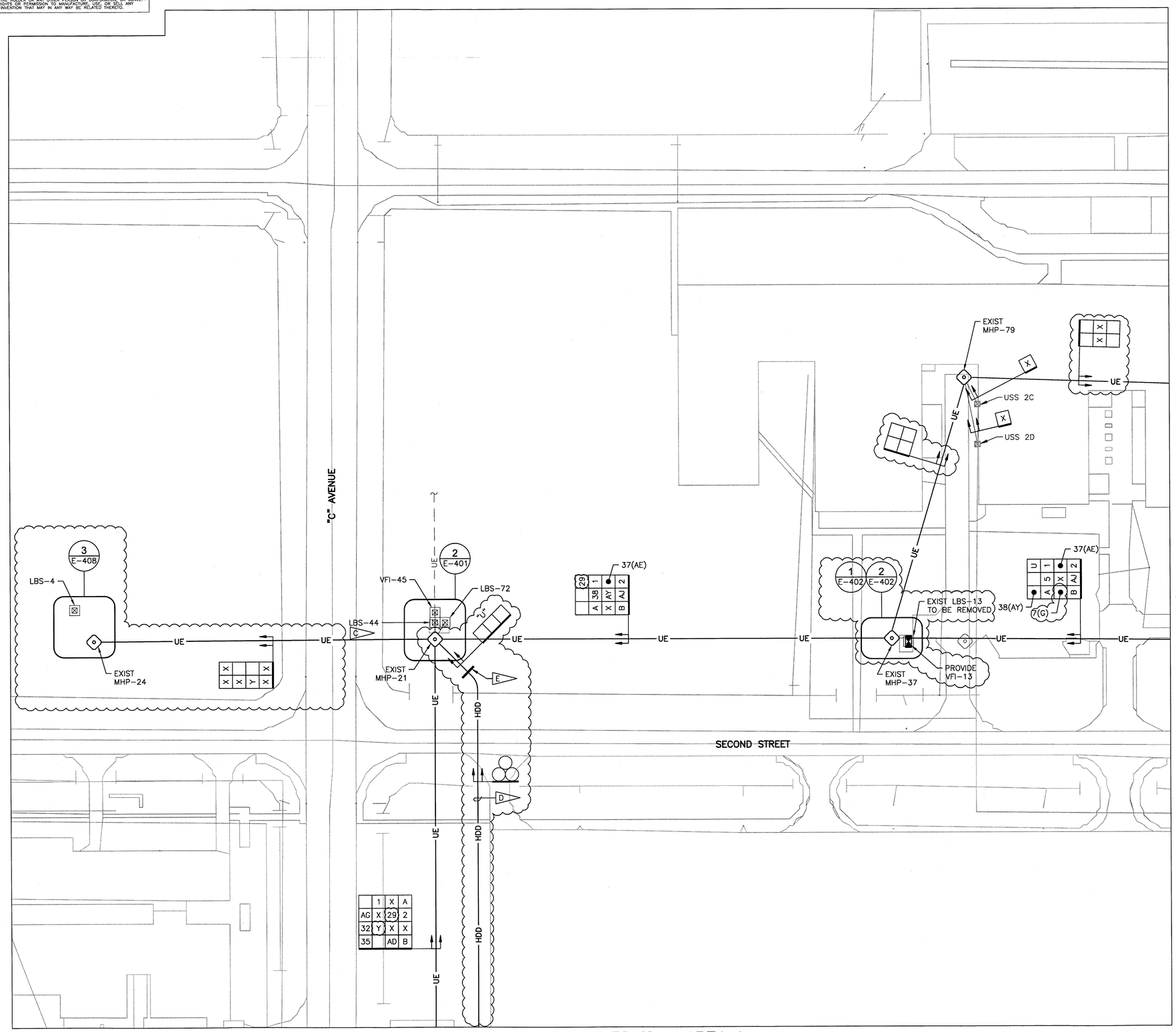


## SITE PLAN – AREA 1

SCALE 1" = 40' – 0"

N

GRAPHIC SCALE

0' 20' 40' 80' 120'

1" = 40'-0"

## SPECIFIC NOTES:

A. REFER TO DWG. E-001 FOR GENERAL NOTES AND E-002 FOR SYMBOLS LEGEND.

B. REFER TO DWG. E-003 AND E-004 FOR CABLE SCHEDULES.

C. REFER TO ENLARGED PLAN FOR DESCRIPTION OF CABLE #33(AH) ROUTING BETWEEN LBS-44 AND LBS-72.

D. REFER TO DWG. C-403 FOR DIRECTIONAL DRILLED CONDUIT PROFILE.

E. SOLID SLEEVE TRANSITION FROM OPEN CUT TO DIRECTIONAL BORE. EXTEND DUCT BANK CONCRETE 5' BEYOND TRANSITION.

E01-79K39135

SHEET 8 OF 22

| SYM. | ZONE | DESCRIPTION | DATE | APPROVED |
|---|---|---|---|---|

REVISIONS

URS
7650 West Courtney Campbell Causeway
Suite 700
Tampa, Florida 33607
Ph: (813) 285-1711 Fax: (813) 286-6587
FDBPR LICENSE NO. 7285

| SIGNATURES | | DATE |
|---|---|---|
| DRAWN | TRS | 9/24/12 |
| CHECKED | GSK | 9/24/12 |
| SUBMITTED | GLENN H. DAVIS | |
| ST OF LICENSURE: FL | | |
| LICENSE NO. 66443 | | |
| APPROVED | F. WALKER | |
| | S. MEHTA | |

NATIONAL AERONAUTICS AND SPACE ADMINISTRATION
JOHN F. KENNEDY SPACE CENTER, NASA
KENNEDY SPACE CENTER, FLORIDA

REVITALIZE MEDIUM VOLTAGE
ELECTRICAL DISTRIBUTION SYSTEMS,
INDUSTRIAL AND PAYLOAD PROCESSING AREAS

SITE PLAN – AREA 1

E-101

| FILE NO. | SIZE | DWG. NO. |
|---|---|---|
| | F | 79K39135 |
| PCN NO. 98860 | | SHEET 38 |

KSC FORM 1-11A (REV 6/91) (C/G 12/93)

NOTICE – WHEN GOVERNMENT DRAWINGS, SPECIFICATIONS, OR OTHER DATA ARE USED FOR ANY PURPOSE OTHER THAN IN CONNECTION WITH A DEFINITELY RELATED GOVERNMENT PROCUREMENT OPERATION, THE UNITED STATES GOVERNMENT THEREBY INCURS NO RESPONSIBILITY NOR ANY OBLIGATION WHATSOEVER; AND THE FACT THAT THE GOVERNMENT MAY HAVE FORMULATED, FURNISHED, OR IN ANY WAY SUPPLIED THE SAME IS NOT TO BE REGARDED BY IMPLICATION OR OTHERWISE AS IN ANY MANNER LICENSING THE HOLDER OR ANY OTHER PERSON OR CORPORATION, OR CONVEYING ANY RIGHTS OR PERMISSION TO MANUFACTURE, USE, OR SELL ANY PATENTED INVENTION THAT MAY IN ANY WAY BE RELATED THERETO.

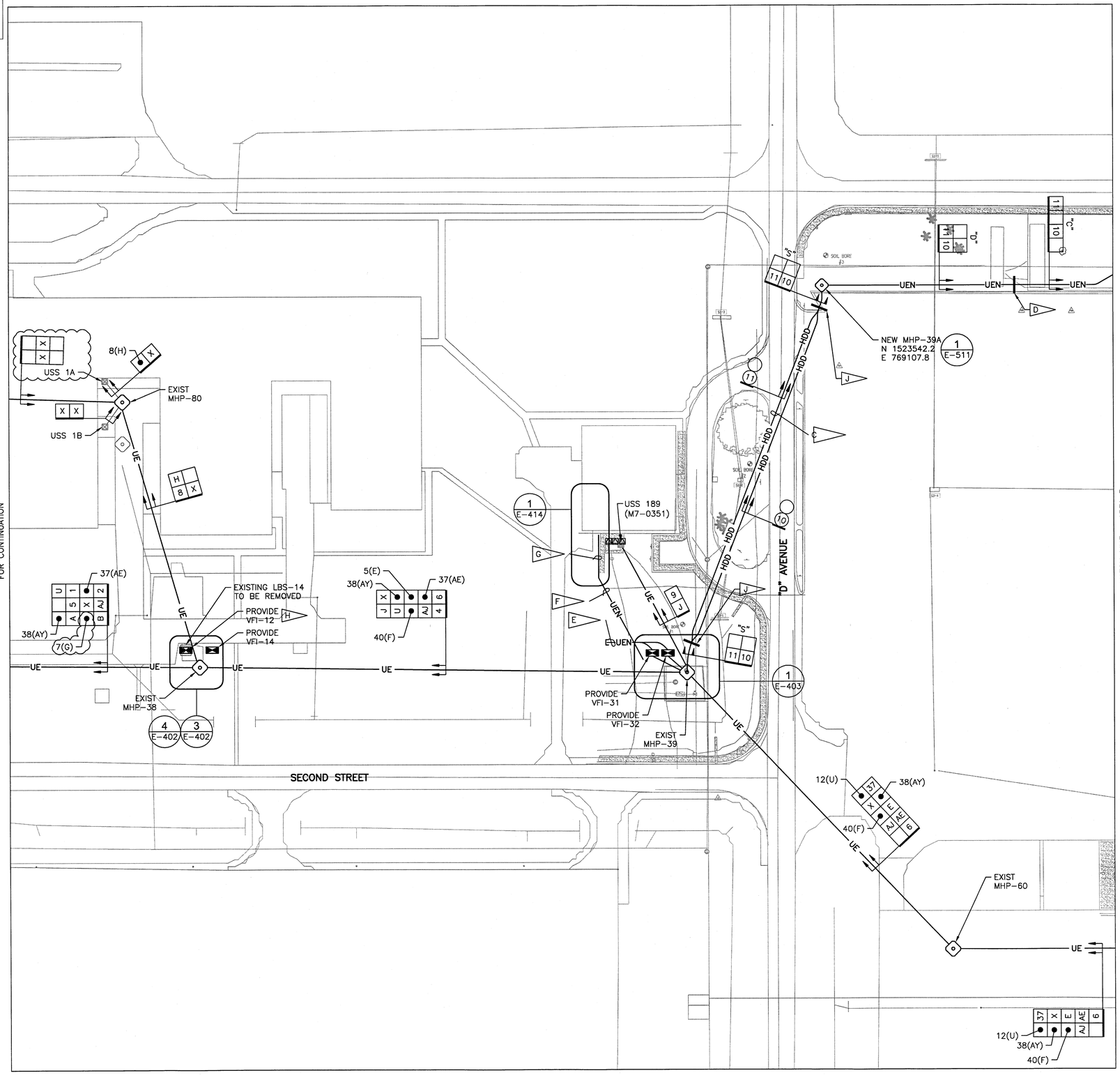


## SITE PLAN – AREA 2

SCALE 1" = 40' – 0"

N

GRAPHIC SCALE

0' 20' 40' 80' 120'

1" = 40'-0"

## SPECIFIC NOTES:

A. REFER TO DWG. E-001 FOR GENERAL NOTES AND E-002 FOR SYMBOLS LEGEND.

B. REFER TO DWG. E-003 AND E-004 FOR CABLE SCHEDULES.

C. REFER TO DETAIL DWG. C-401 FOR DIRECTIONAL DRILLED CONDUIT PROFILE.

D. TRANSITION FROM TYPE "D" DUCT BANK ARRANGEMENT TO TYPE "C" DUCT BANK ARRANGEMENT.

E. PROVIDE DUCT BANK A MINIMUM OF 20' PAST VFI-31, -32 CONCRETE PAD FOR FUTURE CENTRAL CAMPUS FACILITIES.

F. PROVIDE 1 1/2" COMMUNICATIONS CONDUIT, DIRECT BURIED AND EXPOSED, BETWEEN VFI-31 AND -32 METERING CABINETS AND EXISTING COMMUNICATIONS RACK INSIDE AUDITORIUM AND TRAINING BUILDING M7-351 COMMUNICATIONS ROOM 123. PROVIDE SCH. 80 PVC CONDUIT WHERE DIRECT BURIED AND GRS CONDUIT WHERE EXPOSED. WHERE CONDUIT IS DIRECT BURIED, PROVIDE A MINIMUM OF 24" EARTH COVER. TRANSITION SCH. 80 PVC CONDUIT TO GRS CONDUIT AT LAST 90 DEG. ELBOW BEFORE RISING UP AND EMERGING FROM GRADE. REFER TO DRAWING E-632 FOR COMMUNICATIONS CONDUIT CONTENTS REQUIREMENTS.

G. ROUTE COMMUNICATIONS CONDUIT EXPOSED ABOVE GRADE ON EXISTING PIPE RACK. PROVIDE GALVANIZED STEEL SUPPORT STRUTS ON EXISTING PIPE RACK ON WHICH TO MOUNT CONDUIT, AS REQUIRED. FASTEN STRUT TO PIPE RACK USING 1/4" DIA. GALVANIZED STEEL HARDWARE. DO NOT FASTEN STRUT TO MECHANICAL PIPE OR OTHER CONDUIT

H. REFER TO ENLARGED PLAN 4 ON DWG. E-402 FOR ROUTING OF CABLE #3.

J. DEMARCATION OF TRANSITION BETWEEN CONCRETE ENCASED HDPE CONDUIT AND HDPE DIRECTIONALLY BORED CONDUIT.

E01-79K39135

SHEET 9 OF 22

| SYM. | ZONE | DESCRIPTION | DATE | APPROVED |
|---|---|---|---|---|

REVISIONS

URS
7650 West Courtney Campbell Causeway
Suite 700
Tampa, Florida 33607
Ph: (813) 286-1711 Fax: (813) 286-6587
FDBPR LICENSE NO. 7285

| SIGNATURES | | DATE |
|---|---|---|
| DRAWN | TRS | 9/24/12 |
| CHECKED | GSK | 9/24/12 |
| SUBMITTED | GLENN H. DAVIS | |
| ST OF LICENSURE: FL | | |
| LICENSE NO. 66443 | | |
| APPROVED | F. WALKER | |
| | S. MEHTA | |

NATIONAL AERONAUTICS AND SPACE ADMINISTRATION
JOHN F. KENNEDY SPACE CENTER, NASA
KENNEDY SPACE CENTER, FLORIDA

REVITALIZE MEDIUM VOLTAGE
ELECTRICAL DISTRIBUTION SYSTEMS,
INDUSTRIAL AND PAYLOAD PROCESSING AREAS

SITE PLAN – AREA 2

| FILE NO. | SIZE | DWG. NO. |
|---|---|---|
| | F | 79K39135 |
| PCN NO. 98860 | | SHEET 39 |

E-102

KSC FORM 1-11A (REV 8/91) (C/G 12/93)

NOTICE – WHEN GOVERNMENT DRAWINGS, SPECIFICATIONS, OR OTHER DATA ARE USED FOR ANY PURPOSE OTHER THAN IN CONNECTION WITH A DEFINITELY RELATED GOVERNMENT PROCUREMENT OPERATION, THE UNITED STATES GOVERNMENT THEREBY INCURS NO RESPONSIBILITY NOR ANY OBLIGATION WHATSOEVER, AND THE FACT THAT THE GOVERNMENT MAY HAVE FORMULATED, FURNISHED, OR IN ANY WAY SUPPLIED THE SAID DRAWINGS, SPECIFICATIONS, OR OTHER DATA IS NOT TO BE REGARDED BY IMPLICATION OR OTHERWISE AS IN ANY MANNER LICENSING THE HOLDER OR ANY OTHER PERSON OR CORPORATION, OR CONVEYING ANY RIGHTS OR PERMISSION TO MANUFACTURE, USE, OR SELL ANY PATENTED INVENTION THAT MAY IN ANY WAY BE RELATED THERETO.

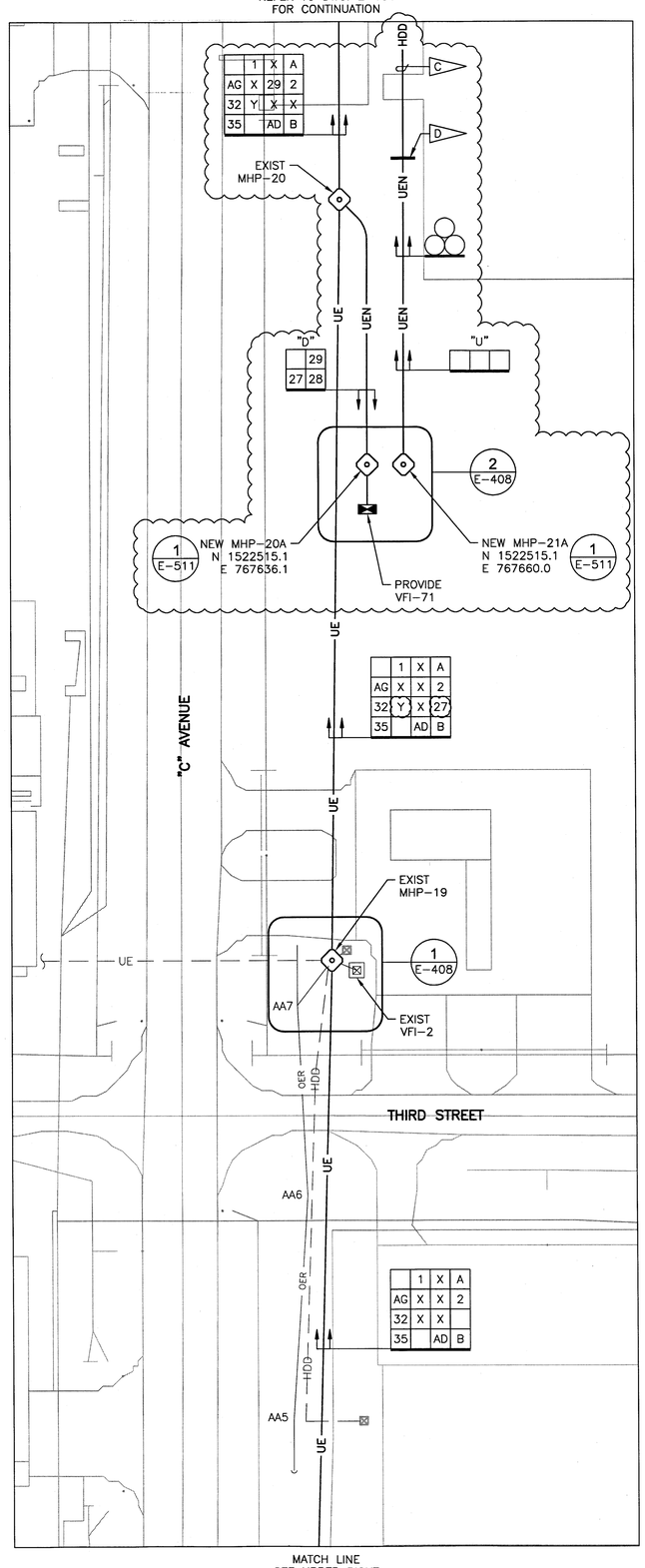


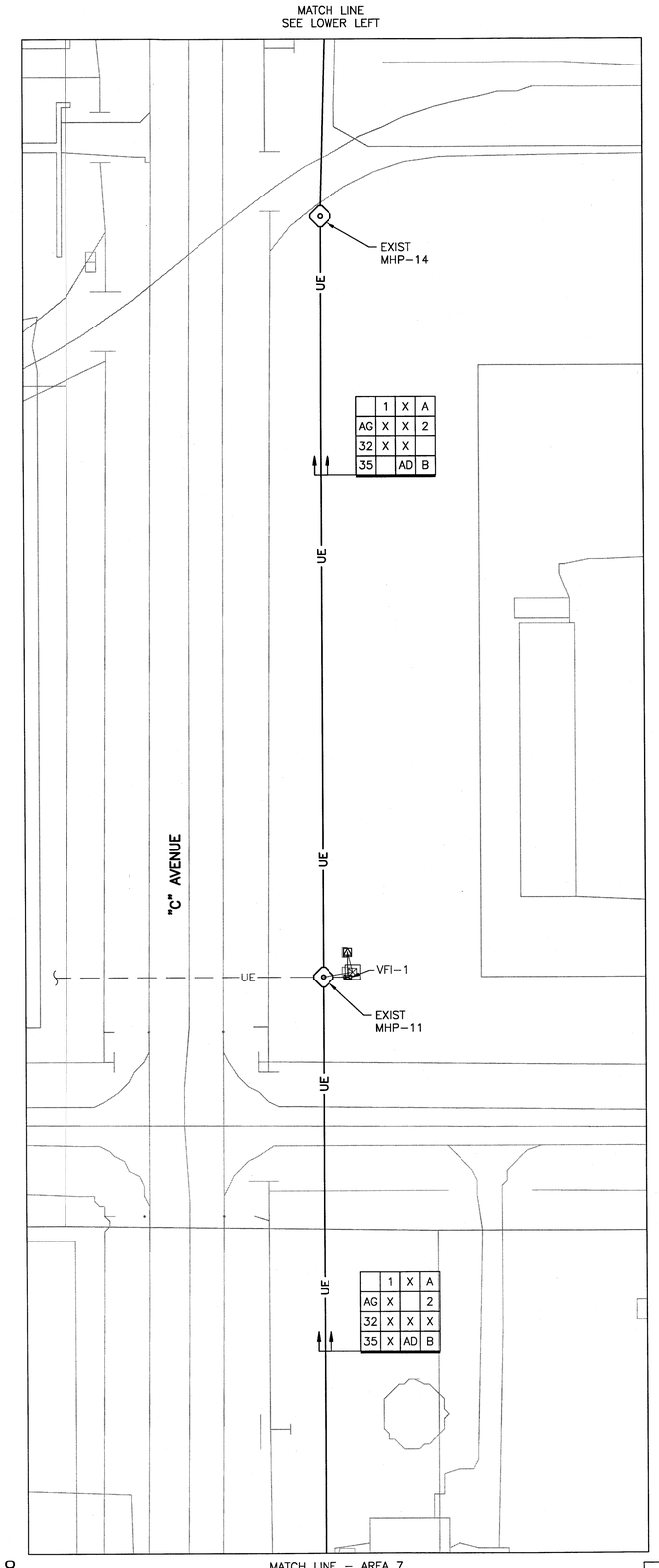


SITE PLAN – AREA 8

SCALE 1" = 40' – 0"

N

GRAPHIC SCALE

0' 20' 40' 80' 120'

1" = 40'-0"

## SPECIFIC NOTES:

A. REFER TO DWG. E-001 FOR GENERAL NOTES AND E-002 FOR SYMBOLS LEGEND.

B. REFER TO DWG. E-003 AND E-004 FOR CABLE SCHEDULES.

C. REFER TO DWG. C-403 FOR DIRECTIONAL DRILLED CONDUIT PROFILE.

D. SOLID SLEEVE TRANSITION FROM OPEN CUT TO DIRECTIONAL BORE. EXTEND DUCT BANK CONCRETE 5' BEYOND TRANSITION.

E01-79K39135

SHEET 10 OF 22

| SYM. | ZONE | DESCRIPTION | DATE | APPROVED |
|---|---|---|---|---|

REVISIONS

URS

7650 West Courtney Campbell Causeway
Suite 700
Tampa, Florida 33607
Ph: (813) 286-1711 Fax: (813) 286-6587
FDBPR LICENSE NO. 7285

| SIGNATURES | | DATE |
|---|---|---|
| DRAWN | TRS | 9/24/12 |
| CHECKED | GSK | 9/24/12 |
| SUBMITTED | GLENN H. DAVIS | |
| ST OF LICENSURE: FL | | |
| LICENSE NO.: 66443 | | |
| APPROVED | F. WALKER | |
| | S. MEHTA | |

NATIONAL AERONAUTICS AND SPACE ADMINISTRATION
JOHN F. KENNEDY SPACE CENTER, NASA
KENNEDY SPACE CENTER, FLORIDA

REVITALIZE MEDIUM VOLTAGE
ELECTRICAL DISTRIBUTION SYSTEMS,
INDUSTRIAL AND PAYLOAD PROCESSING AREAS

SITE PLAN – AREA 8

| FILE NO. | SIZE | DWG. NO. |
|---|---|---|
| | F | 79K39135 |
| PCN NO. 98860 | | SHEET 45 |

E-108

T:\NASA KSC\Task No. 1\Drawings\E-108 SITE PLAN – AREA 8.dwg 01/14/2013 16:27

KSC FORM 1-11A (REV 6/91) (C/G 12/93)

NOTICE – WHEN GOVERNMENT DRAWINGS, SPECIFICATIONS, OR OTHER DATA ARE USED FOR ANY PURPOSE OTHER THAN IN CONNECTION WITH A DEFINITELY RELATED GOVERNMENT PROCUREMENT OPERATION, THE UNITED STATES GOVERNMENT THEREBY INCURS NO RESPONSIBILITY NOR ANY OBLIGATION WHATSOEVER; AND THE FACT THAT THE GOVERNMENT MAY HAVE FORMULATED, FURNISHED, OR IN ANY WAY SUPPLIED THE SAID DRAWINGS, SPECIFICATIONS, OR OTHER DATA IS NOT TO BE REGARDED BY IMPLICATION OR OTHERWISE AS IN ANY MANNER LICENSING THE HOLDER OR ANY OTHER PERSON OR CORPORATION, OR CONVEYING ANY RIGHTS OR PERMISSION TO MANUFACTURE, USE, OR SELL ANY PATENTED INVENTION THAT MAY IN ANY WAY BE RELATED THERETO.

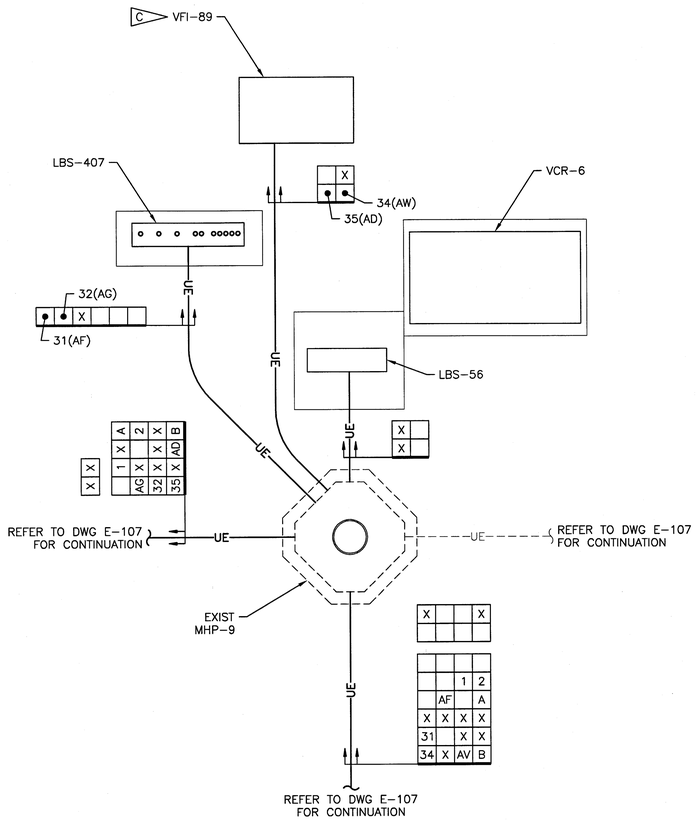


ENLARGED PLAN – MODIFIED (1 / E-107)

SCALE 1" = 5' – 0"

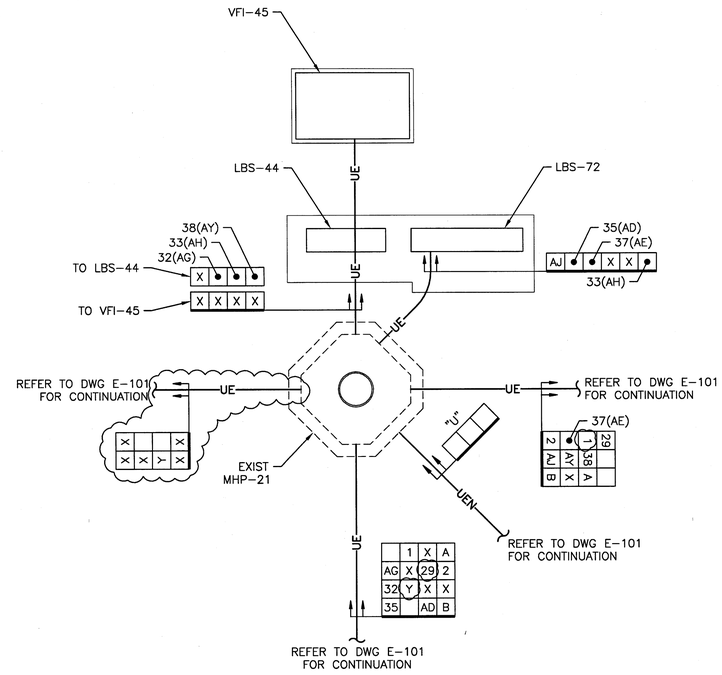


ENLARGED PLAN – MODIFIED (2 / E-101)

SCALE 1" = 5' – 0"

N

GRAPHIC SCALE

0' 5' 10' 15'

1" = 5'-0"

## SPECIFIC NOTES:

A. REFER TO DWG. E-001 FOR GENERAL NOTES AND E-002 FOR SYMBOLS LEGEND.

B. REFER TO DWG. E-003 AND E-004 FOR CABLE SCHEDULES.

C. CONTRACTOR TO FIELD VERIFY EXACT LOCATION OF VFI-89 BEING INSTALLED UNDER SEPARATE CONTRACT.

E01-79K39135

SHEET 11 OF 22

| SYM. | ZONE | DESCRIPTION | DATE | APPROVED |
|---|---|---|---|---|

REVISIONS

URS

7650 West Courtney Campbell Causeway
Suite 700
Tampa, Florida 33607
Ph: (813) 286-1711 Fax: (813) 286-6587
FDBPR LICENSE NO. 7285

| SIGNATURES | | DATE |
|---|---|---|
| DRAWN | TRS | 9/24/12 |
| CHECKED | GSK | 9/24/12 |
| SUBMITTED | GLENN H. DAVIS ST OF LICENSURE: FL LICENSE NO.: 66443 | |
| APPROVED | F. WALKER | |
| | S. MEHTA | |

NATIONAL AERONAUTICS AND SPACE ADMINISTRATION
JOHN F. KENNEDY SPACE CENTER, NASA
KENNEDY SPACE CENTER, FLORIDA

REVITALIZE MEDIUM VOLTAGE ELECTRICAL DISTRIBUTION SYSTEMS, INDUSTRIAL AND PAYLOAD PROCESSING AREAS

ENLARGED SITE PLAN

E-401

| FILE NO. | SIZE | DWG. NO. |
|---|---|---|
| | F | 79K39135 |
| PCN NO. 98860 | | SHEET 46 |

T:\NASA KSC\Task No. 1\Drawings\E-401 ENLARGED SITE PLAN.dwg 01/14/2013 15:07

KSC FORM 1-11A (REV 6/91) (C/G 12/93)

NOTICE – WHEN GOVERNMENT DRAWINGS, SPECIFICATIONS, OR OTHER DATA ARE USED FOR ANY PURPOSE OTHER THAN IN CONNECTION WITH A DEFINITELY RELATED GOVERNMENT PROCUREMENT OPERATION, THE UNITED STATES GOVERNMENT THEREBY INCURS NO RESPONSIBILITY NOR ANY OBLIGATION WHATSOEVER; AND THE FACT THAT THE GOVERNMENT MAY HAVE FORMULATED, FURNISHED, OR IN ANY WAY SUPPLIED THE SAID DRAWINGS, SPECIFICATIONS OR OTHER DATA IS NOT TO BE REGARDED BY IMPLICATION OR OTHERWISE AS IN ANY MANNER LICENSING THE HOLDER OR ANY OTHER PERSON OR CORPORATION, OR CONVEYING ANY RIGHTS OR PERMISSION TO MANUFACTURE, USE, OR SELL ANY PATENTED INVENTION THAT MAY IN ANY WAY BE RELATED THERETO.

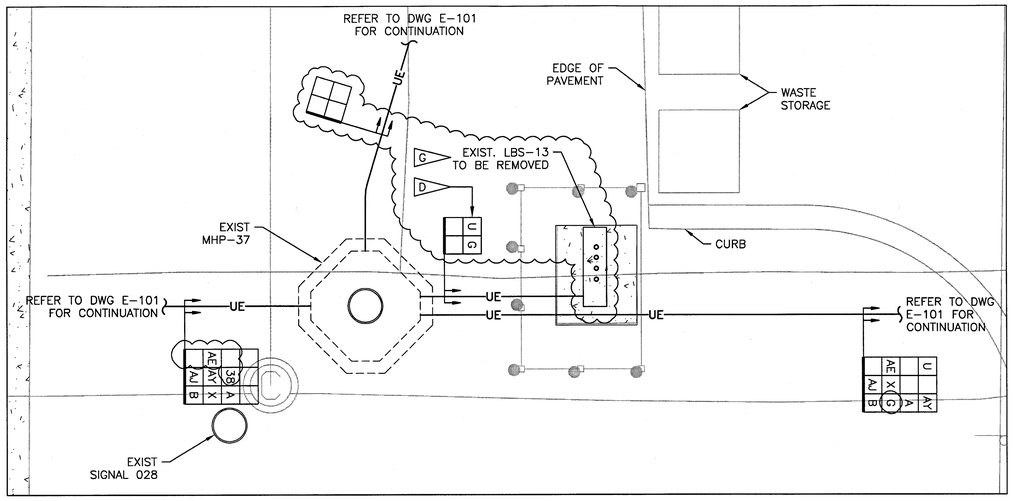


ENLARGED PLAN – DEMOLITION (1 / E-101)

SCALE 1" = 5' – 0"

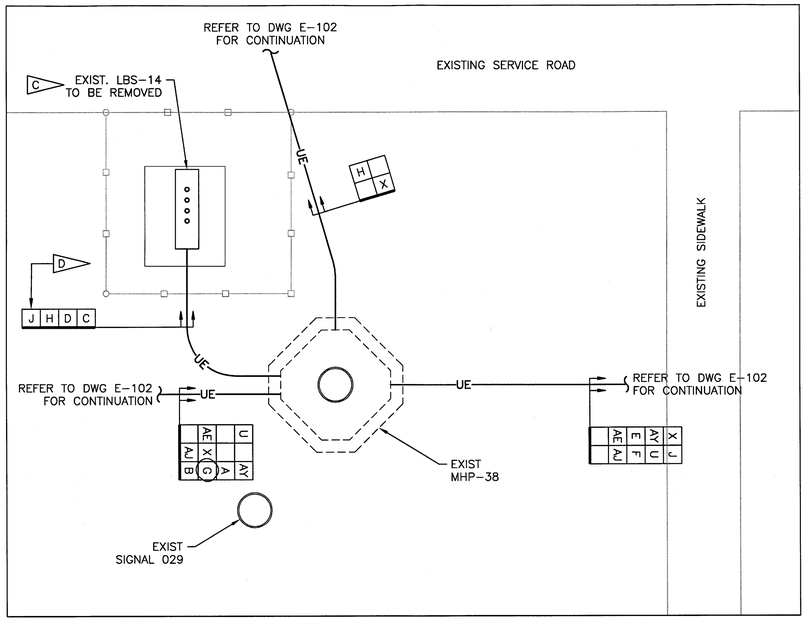


ENLARGED PLAN – DEMOLITION (3 / E-102)

SCALE 1" = 5' – 0"

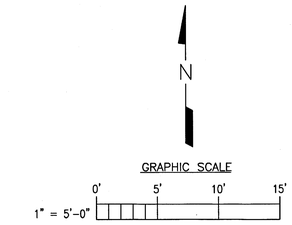


## SPECIFIC NOTES:

A. REFER TO DWG. E-001 FOR GENERAL NOTES AND E-002 FOR SYMBOLS LEGEND.

B. REFER TO DWG. E-003 AND E-004 FOR CABLE SCHEDULES.

C. DISCONNECT, REMOVE AND PROPERLY DISPOSE OF SF6 LOAD BREAK SWITCHES. REFER TO DWG. C-107 FOR ADDITIONAL REQUIREMENTS.

D. REMOVE AND PROPERLY DISPOSE OF EXISTING DUCT BANK BETWEEN MANHOLE AND EXISTING LOAD BREAK SWITCH. LEAVE 18" TO 24" OF DUCT BANK ADJACENT TO MANHOLE ABANDONED IN PLACE, PROVIDE WATER PROOF DUCT SEALANT IN EACH ABANDONED RACEWAY PENETRATING MANHOLE.

E. REFER TO DETAIL 1 ON DWG. E-513 FOR ADDITIONAL VFI REQUIREMENTS.

F. PROVIDE BOLLARD. REFER TO BOLLARD DETAIL ON DWG. C-502 FOR ADDITIONAL REQUIREMENTS.

G. DISCONNECT, REMOVE AND PROPERLY DISPOSE OF SF6 LOAD BREAK SWITCHES. REFER TO DWG. C-108 FOR ADDITIONAL REQUIREMENTS.

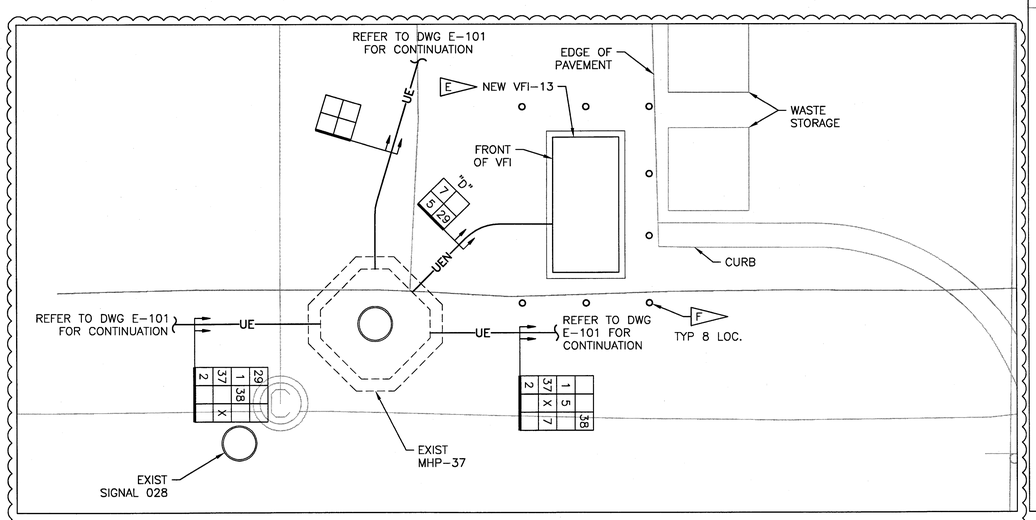


ENLARGED PLAN – MODIFIED (2 / E-101)

SCALE 1" = 5' – 0"

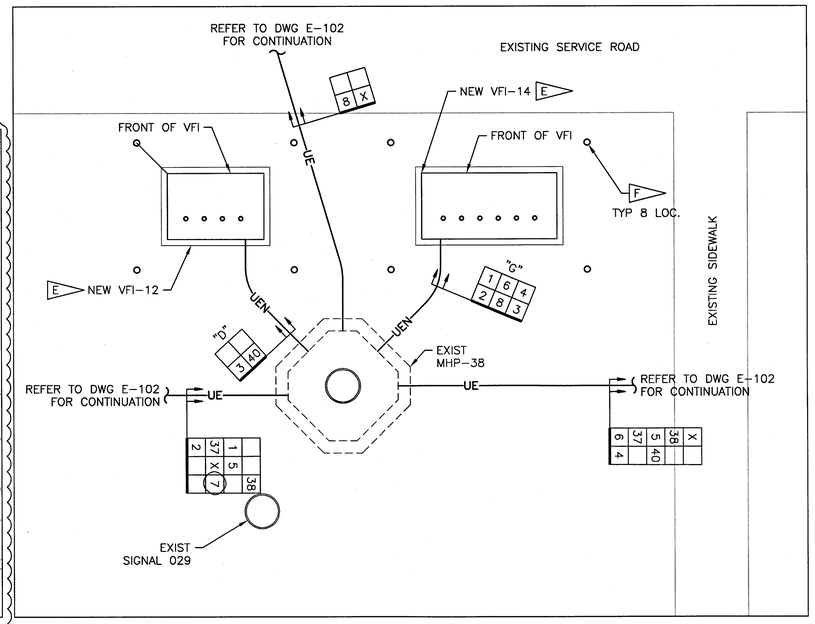


ENLARGED PLAN – MODIFIED (4 / E-102)

SCALE 1" = 5' – 0"

E01-79K39135

SHEET 12 OF 22

| SYM. | ZONE | DESCRIPTION | DATE | APPROVED |
|---|---|---|---|---|
| | | REVISIONS | | |

URS
7650 West Courtney Campbell Causeway
Suite 700
Tampa, Florida 33607
Ph: (813) 285-1711 Fax: (813) 286-6587
FDBPR LICENSE NO. 7285

| SIGNATURES | | DATE |
|---|---|---|
| DRAWN | TRS | 9/24/12 |
| CHECKED | GSK | 9/24/12 |
| SUBMITTED | | |
| GLENN H. DAVIS | | |
| ST OF LICENSURE: FL | | |
| LICENSE NO.: 66443 | | |
| APPROVED | | |
| F. WALKER | | |
| S. MEHTA | | |

NATIONAL AERONAUTICS AND SPACE ADMINISTRATION
JOHN F. KENNEDY SPACE CENTER, NASA
KENNEDY SPACE CENTER, FLORIDA

REVITALIZE MEDIUM VOLTAGE ELECTRICAL DISTRIBUTION SYSTEMS, INDUSTRIAL AND PAYLOAD PROCESSING AREAS

ENLARGED SITE PLAN

E-402

| FILE NO. | SIZE | DWG. NO. |
|---|---|---|
| | F | 79K39135 |
| PCN NO. 98860 | | SHEET 47 |

T:\NASA KSC\Tasks WO.1\Drawings\E-402 ENLARGED SITE PLAN.dwg 01/14/2013 10:07

KSC FORM 1-11A (REV 6/91) (C/G 12/93)

NOTICE – WHEN GOVERNMENT DRAWINGS, SPECIFICATIONS, OR OTHER DATA ARE USED FOR ANY PURPOSE OTHER THAN IN CONNECTION WITH A DEFINITELY-RELATED GOVERNMENT PROCUREMENT OPERATION, THE UNITED STATES GOVERNMENT THEREBY INCURS NO RESPONSIBILITY NOR ANY OBLIGATION WHATSOEVER; AND THE FACT THAT THE GOVERNMENT MAY HAVE FORMULATED, FURNISHED, OR IN ANY WAY SUPPLIED THE SAID DRAWINGS, SPECIFICATIONS OR OTHER DATA IS NOT TO BE REGARDED BY IMPLICATION OR OTHERWISE AS IN ANY MANNER LICENSING THE HOLDER OR ANY OTHER PERSON OR CORPORATION, OR CONVEYING ANY RIGHTS OR PERMISSION TO MANUFACTURE, USE, OR SELL ANY PATENTED INVENTION THAT MAY IN ANY WAY BE RELATED THERETO.

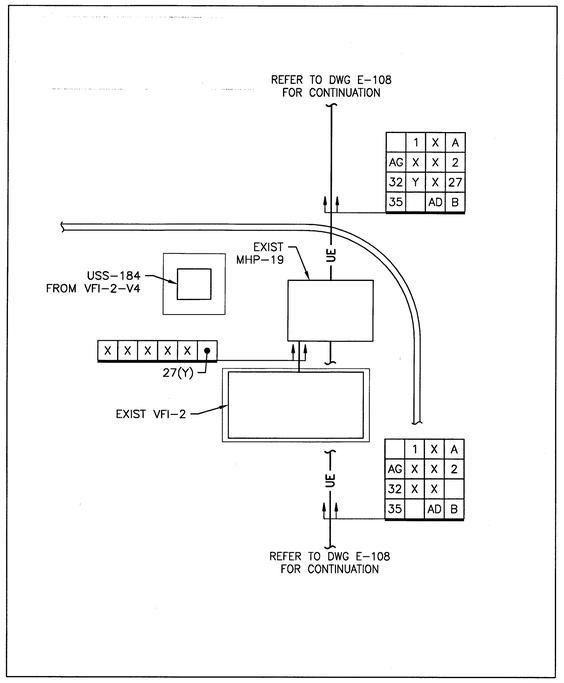


ENLARGED PLAN – MODIFIED (1 / E-108)

SCALE 1" = 5' – 0"

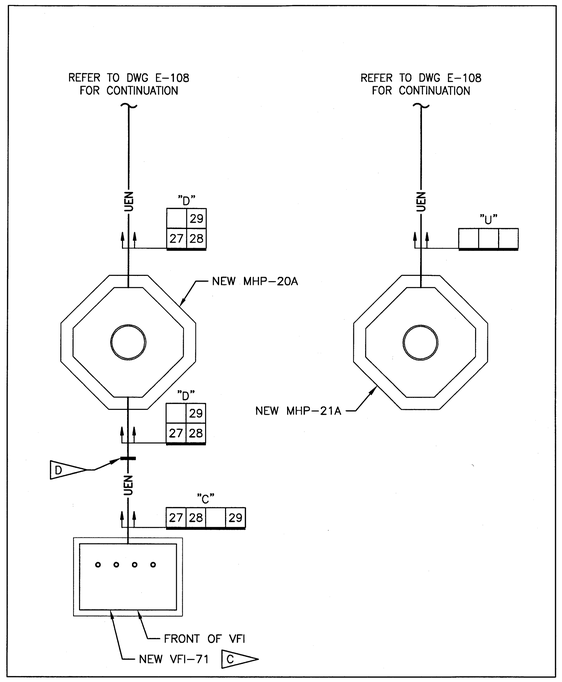


ENLARGED PLAN – MODIFIED (2 / E-108)

SCALE 1" = 5' – 0"

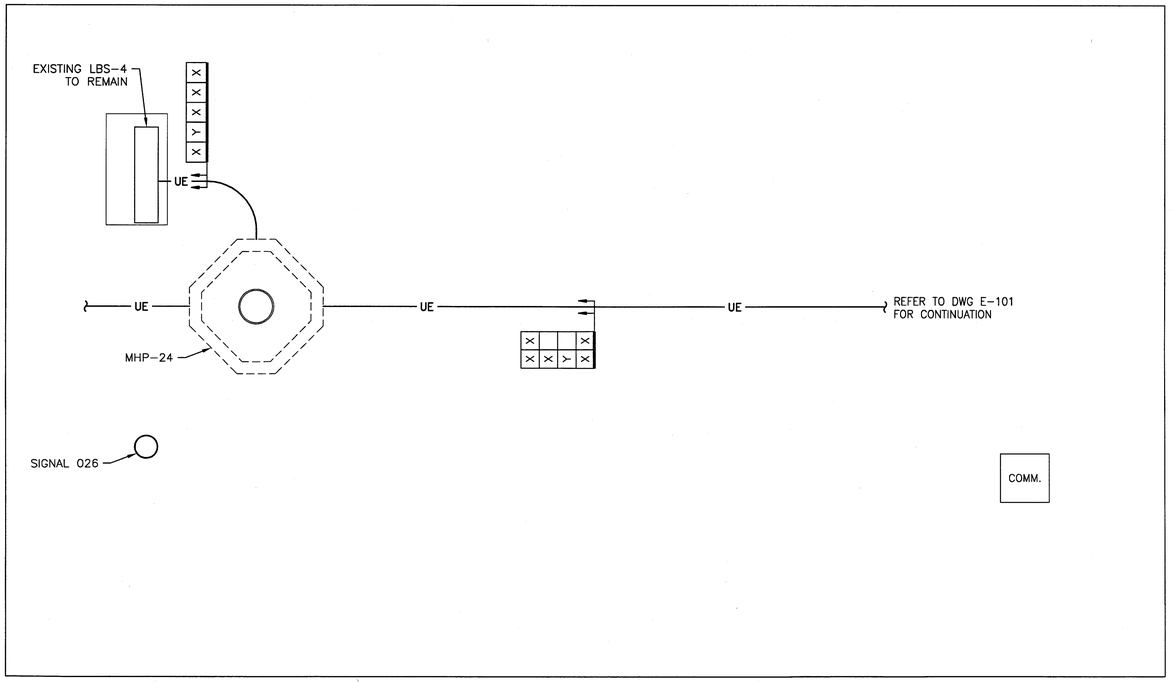


ENLARGED PLAN – MODIFIED (3 / E-101)

SCALE 1" = 5' – 0"

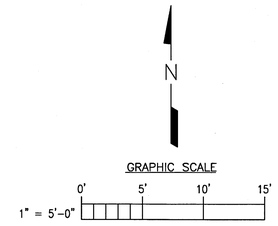


## SPECIFIC NOTES:

A. REFER TO DWG. E-001 FOR GENERAL NOTES AND E-002 FOR SYMBOLS LEGEND.

B. REFER TO DWG. E-003 AND E-004 FOR CABLE SCHEDULES.

C REFER TO DETAIL 1 ON DWG. E-513 FOR ADDITIONAL VFI REQUIREMENTS.

D TRANSITION FROM TYPE "D" DUCT BANK ARRANGEMENT TO TYPE "C" DUCT BANK ARRANGEMENT.

E01-79K39135

SHEET 13 OF 22

| SYM. | ZONE | DESCRIPTION | DATE | APPROVED |
|---|---|---|---|---|
| | | REVISIONS | | |

URS

7650 West Courtney Campbell Causeway
Suite 700
Tampa, Florida 33607
Ph: (813) 286-1711 Fax: (813) 286-6587
FDBPR LICENSE NO. 7285

| SIGNATURES | | DATE |
|---|---|---|
| DRAWN | TRS | 9/24/12 |
| CHECKED | GSK | 9/24/12 |
| SUBMITTED | GLENN H. DAVIS | 1/17/2013 |
| ST OF LICENSURE: FL | | |
| LICENSE NO.: 66443 | | |
| APPROVED | F. WALKER | 1/15/13 |
| | S. MEHTA | 1/17/13 |

NATIONAL AERONAUTICS AND SPACE ADMINISTRATION
JOHN F. KENNEDY SPACE CENTER, NASA
KENNEDY SPACE CENTER, FLORIDA

REVITALIZE MEDIUM VOLTAGE
ELECTRICAL DISTRIBUTION SYSTEMS,
INDUSTRIAL AND PAYLOAD PROCESSING AREAS

ENLARGED SITE PLAN

| FILE NO. | SIZE | DWG. NO. |
|---|---|---|
| | F | 79K39135 |
| PCN NO. 98860 | | SHEET |

E-408

KSC FORM 1-11A (REV 6/91) (C/G 12/95)

NOTICE – WHEN GOVERNMENT DRAWINGS, SPECIFICATIONS, OR OTHER DATA ARE USED FOR ANY PURPOSE OTHER THAN IN CONNECTION WITH A DEFINITELY RELATED GOVERNMENT PROCUREMENT OPERATION, THE UNITED STATES GOVERNMENT THEREBY INCURS NO RESPONSIBILITY NOR ANY OBLIGATION WHATSOEVER; AND THE FACT THAT THE GOVERNMENT MAY HAVE FORMULATED, FURNISHED, OR IN ANY WAY SUPPLIED THE SAID DRAWINGS, SPECIFICATIONS, OR OTHER DATA IS NOT TO BE REGARDED BY IMPLICATION OR OTHERWISE AS IN ANY MANNER LICENSING THE HOLDER OR ANY OTHER PERSON OR CORPORATION, OR CONVEYING ANY RIGHTS OR PERMISSION TO MANUFACTURE, USE, OR SELL ANY PATENTED INVENTION THAT MAY IN ANY WAY BE RELATED THERETO.

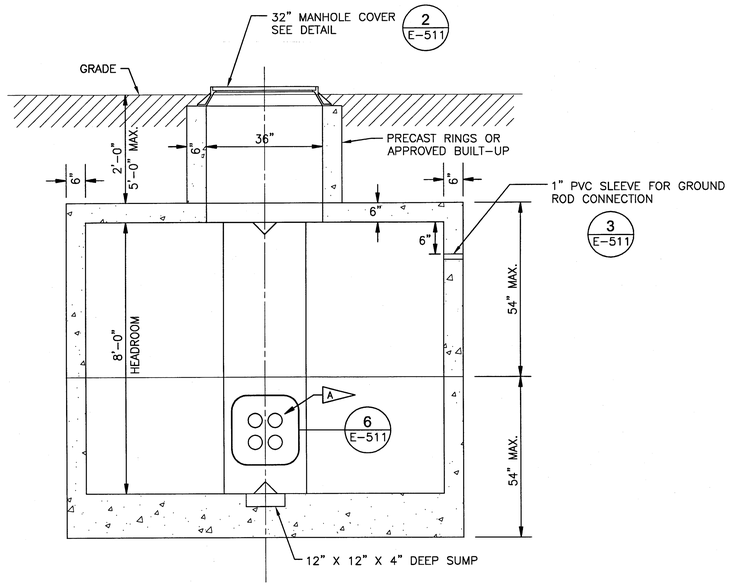


SECTION VIEW

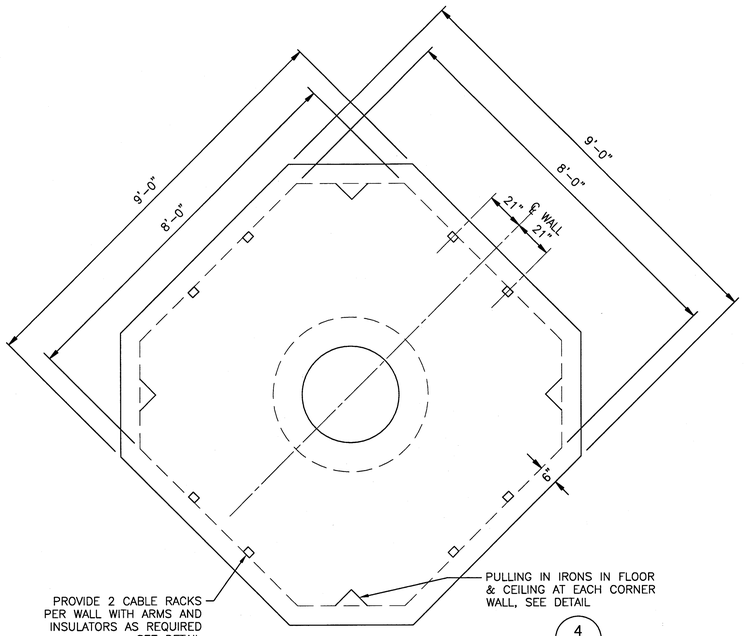


TOP VIEW
8'-0" x 8'-0" MANHOLE
NOT TO SCALE

PRECAST OCTAGONAL MANHOLE (1 / E-102, E-104, E-108, E-408, E-415)
NOT TO SCALE

| MANHOLE CONDUIT ENTRANCE SCHEDULE | | | | |
|---|---|---|---|---|
| MANHOLE | NORTH | EAST | SOUTH | WEST |
| MHP-39A | | 4-5" | 4-5" | |
| MHP-69A | 6-5" | | 6-5" | |
| MHP-69B | | 6-5" | | 12-5" |
| MHP-20A | 4-5" | | 4-5" | |
| MHP-21A | 3-5" | | | |

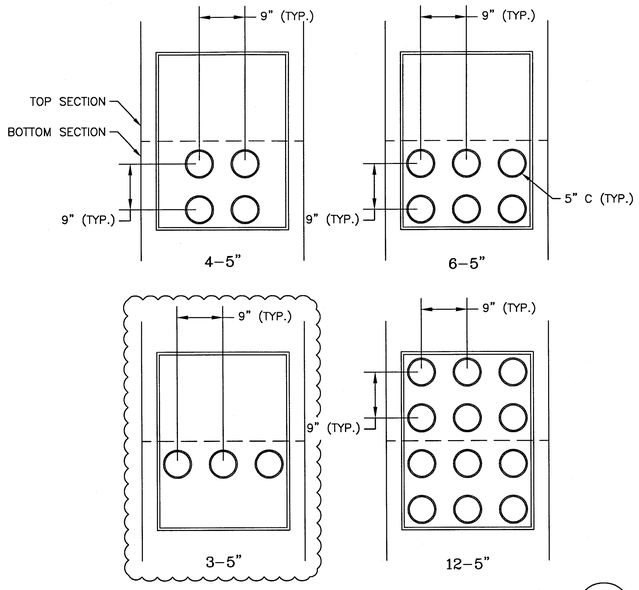


END BELL ARRANGEMENTS (6 / E-511)
NOT TO SCALE

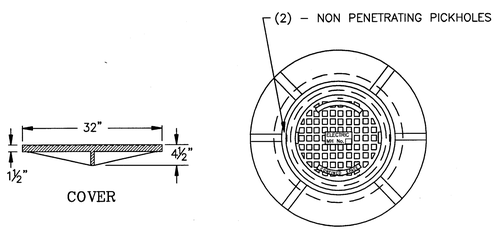


COVER AND FRAME ASSEMBLY

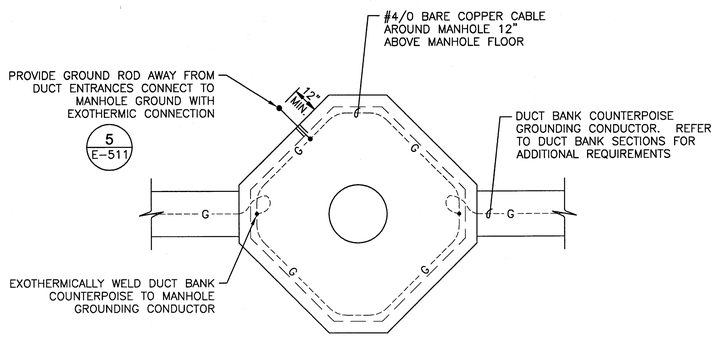


MANHOLE GROUNDING DETAIL (3 / E-511)
NOT TO SCALE

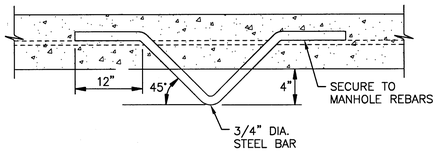


PULLING-IN IRON DETAIL (4 / E-511)
NOT TO SCALE

SPECIFIC NOTES:

A. DUCT BANK ENTRANCE TO MANHOLE. REFER TO DETAILS 3 AND 4 ON DWG. E-512 FOR ADDITIONAL REQUIREMENTS.

B. IN NEW MANHOLES, CABLES FOR DIFFERENT FEEDER CIRCUITS SHALL BE ROUTED ALONG OPPOSITE SIDES OF THE MANHOLE.

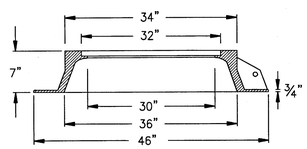


NOTES:

1. MATERIAL – ASTM-A48 CLASS 30B GRAY IRON

MANHOLE
COVER AND FRAME ASSEMBLY (2 / E-511)
NOT TO SCALE

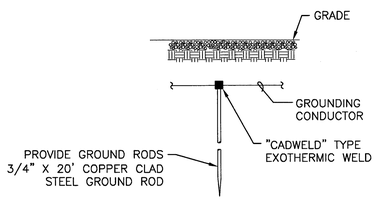


GROUND ROD DETAIL (5 / E-511, E-513, E-514)
NOT TO SCALE

E01-79K39135

SHEET 14 OF 22

| SYM. | ZONE | DESCRIPTION | DATE | APPROVED |
|---|---|---|---|---|
| | | REVISIONS | | |

URS
7650 West Courtney Campbell Causeway
Suite 700
Tampa, Florida 33607
Ph: (813) 286-1711 Fax: (813) 286-6587
FDBPR LICENSE NO. 7285

| SIGNATURES | | DATE |
|---|---|---|
| DRAWN | TRS | 9/24/12 |
| CHECKED | GSK | 9/24/12 |
| SUBMITTED | GLENN H. DAVIS | |
| ST OF LICENSURE: FL | | |
| LICENSE NO.: 66443 | | |
| APPROVED | F. WALKER | |
| | S. MEHTA | |

NATIONAL AERONAUTICS AND SPACE ADMINISTRATION
JOHN F. KENNEDY SPACE CENTER, NASA
KENNEDY SPACE CENTER, FLORIDA

REVITALIZE MEDIUM VOLTAGE
ELECTRICAL DISTRIBUTION SYSTEMS,
INDUSTRIAL AND PAYLOAD PROCESSING AREAS

MANHOLE DETAILS

E-511

| FILE NO. | SIZE | DWG. NO. |
|---|---|---|
| | F | 79K39135 |
| PCN NO. 98860 | | SHEET 72 |

KSC FORM 1-11A (REV 6/91) (C/G 12/93)

T:\Mike KSC\Task Ord 1\Drawings\E-511 MANHOLE DETAILS.dwg 01/14/2013 16:07

NOTICE – WHEN GOVERNMENT DRAWINGS, SPECIFICATIONS, OR OTHER DATA ARE USED FOR ANY PURPOSE OTHER THAN IN CONNECTION WITH A DEFINITELY RELATED GOVERNMENT PROCUREMENT OPERATION, THE UNITED STATES GOVERNMENT THEREBY INCURS NO RESPONSIBILITY NOR ANY OBLIGATION WHATSOEVER; AND THE FACT THAT THE GOVERNMENT MAY HAVE FORMULATED, FURNISHED, OR IN ANY WAY SUPPLIED THE SAID DRAWINGS, SPECIFICATIONS, OR OTHER DATA IS NOT TO BE REGARDED BY IMPLICATION, OTHERWISE, AS IN ANY MANNER LICENSING THE HOLDER OR ANY OTHER PERSON OR CORPORATION, OR CONVEYING ANY RIGHTS OR PERMISSION TO MANUFACTURE, USE, OR SELL ANY PATENTED INVENTION THAT MAY IN ANY WAY BE RELATED THERETO.

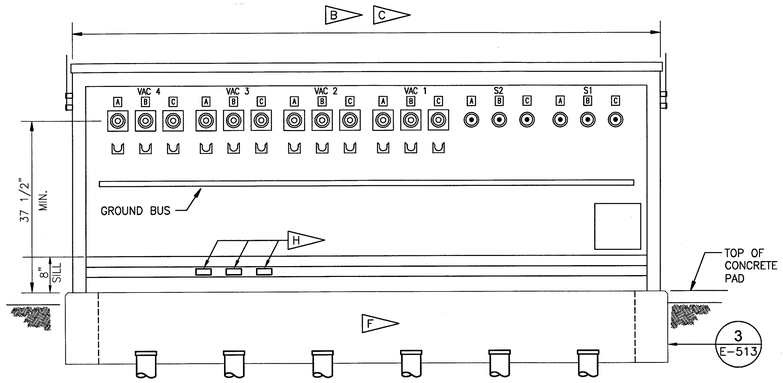


REAR ELEVATION
4 INTERRUPTERS & 2 SWITCHES
(DOORS NOT SHOWN FOR CLARITY)

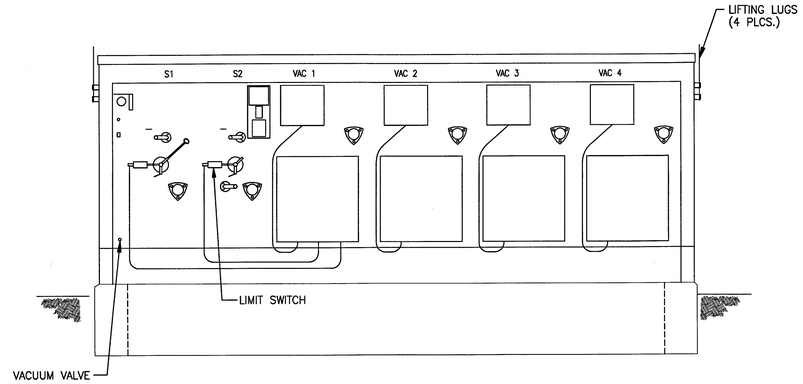


FRONT ELEVATION
(DOORS NOT SHOWN FOR CLARITY)

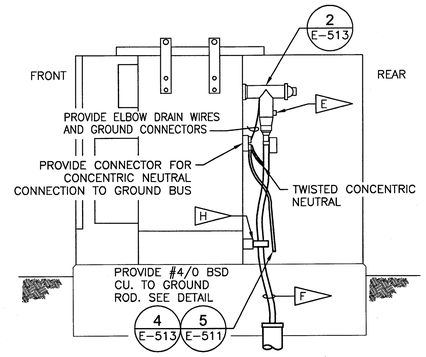


SIDE ELEVATION
(SIDE PANEL NOT SHOWN FOR CLARITY)

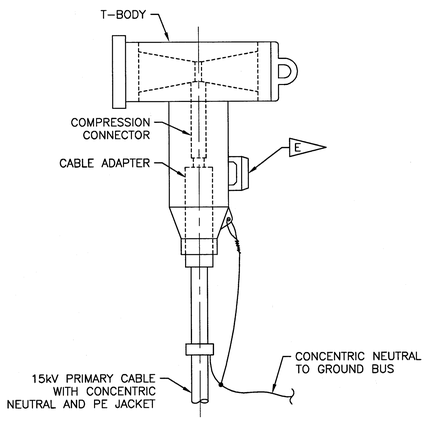


15KV, 600A. TERMINATOR ASSEMBLY (2 / E-513, E-514)
NOT TO SCALE

LOAD BREAK SWITCH WITH VACUUM FAULT INTERRUPTERS 15KV, SF6 PAD MOUNT VFI DETAIL (B) (1 / E-402, E-403, E-408, E-602)
NOT TO SCALE

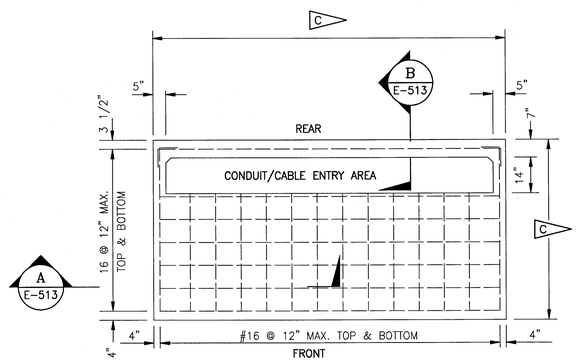


CONCRETE PAD DETAIL – PLAN (3 / E-513)
NOT TO SCALE

## SPECIFIC NOTES:

A. REFER TO DWG. E-001 FOR GENERAL NOTES AND E-002 FOR SYMBOLS LEGEND

(B) DIMENSIONS INDICATED FOR VFI ENCLOSURE AND CONCRETE PAD ARE SPECIFIC TO THE BASIS OF DESIGN. THE CONTRACTOR IS RESPONSIBLE FOR VERIFYING DIMENSIONS OF FURNISHED EQUIPMENT. IF FURNISHED EQUIPMENT EXCEEDS VALUES SHOWN, THE CONTRACTOR IS RESPONSIBLE FOR INCREASING THE CONCRETE PAD TO MATCH. PROVIDE A MINIMUM OF 6" BETWEEN ENCLOSURE AND EDGE OF CONCRETE PAD. WHERE METERING CABINETS ARE SHOWN ADJACENT TO ENCLOSURE, PROVIDE A MINIMUM OF 18" BETWEEN SWITCH ENCLOSURE AND EDGE OF CONCRETE PAD.

(C) BASIS OF DESIGN FOR SWITCH DIMENSIONS ARE SHOWN BELOW. ADJUST DIMENSIONS AS REQUIRED BASED ON ACTUAL EQUIPMENT PROVIDED:
88" FOR VFI-13, VFI-18A, AND VFI-19A.
124" FOR VFI-14, VFI-31, VFI-32, AND VFI-80.

D. REFER TO DWG. E-004 FOR MODIFIED CABLE SCHEDULE.

(E) PROVIDE HOT LINE VOLTAGE INDICATOR ON TEST POINT FOR 600A BOLTED ELBOW.

(F) PROVIDE CABLE TAGS ON ALL NEW CABLES. REFER TO DETAIL 2 ON DWG. E-512.

G. PROVIDE 600A DEADBREAK BUSHING FOR ALL SWITCHED AND PROTECTED WAYS.

(H) WHERE INDICATED ON SINGLE LINE DIAGRAMS, PROVIDE CURRENT TRANSFORMERS MOUNTED INTERNAL TO THE VFI ENCLOSURE. PROVIDE MOUNTING STRUCTURE TO SECURE THE CT'S TO THE VFI STRUCTURE. PROVIDE NIPPLE THROUGH TO METER TERMINAL CABINET. REFER TO DWG. E-631 FOR ADDITIONAL REQUIREMENTS.

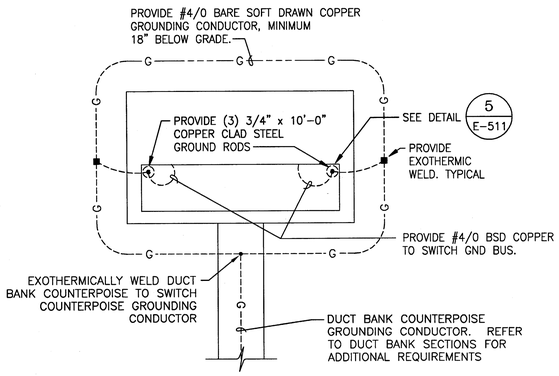


SWITCH GROUNDING DETAIL (4 / E-513, E-514)
NOT TO SCALE

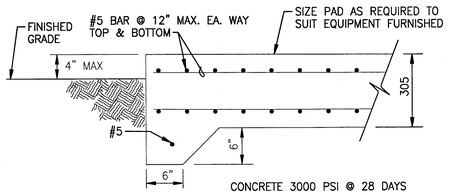


SECTION (B) A / E-513
NOT TO SCALE

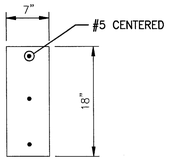


SECTION B / E-513
NOT TO SCALE

E01-79K39135
SHEET 15 OF 22

| SYM. | ZONE | DESCRIPTION | DATE | APPROVED |
|---|---|---|---|---|
| | | REVISIONS | | |

URS
7650 West Courtney Campbell Causeway
Suite 700
Tampa, Florida 33607
Ph: (813) 265-1711 Fax: (813) 286-6587
FDBPR LICENSE NO. 7285

| SIGNATURES | | DATE |
|---|---|---|
| DRAWN | TRS | 9/24/12 |
| CHECKED | GSK | 9/24/12 |
| SUBMITTED | | |
| GLENN H. DAVIS | | |
| ST OF LICENSURE: FL | | |
| LICENSE NO.: 66443 | | |
| APPROVED | | |
| F. WALKER | | |
| S. MEHTA | | |

NATIONAL AERONAUTICS AND SPACE ADMINISTRATION
JOHN F. KENNEDY SPACE CENTER, NASA
KENNEDY SPACE CENTER, FLORIDA

REVITALIZE MEDIUM VOLTAGE ELECTRICAL DISTRIBUTION SYSTEMS, INDUSTRIAL AND PAYLOAD PROCESSING AREAS

VFI DETAILS

E-513

| FILE NO. | SIZE | DWG. NO. |
|---|---|---|
| | F | 79K39135 |
| PCN NO. | 98860 | SHEET 74 |

NOTICE — WHEN GOVERNMENT DRAWINGS, SPECIFICATIONS, OR OTHER DATA ARE USED FOR ANY PURPOSE OTHER THAN IN CONNECTION WITH A DEFINITELY RELATED GOVERNMENT PROCUREMENT OPERATION, THE UNITED STATES GOVERNMENT THEREBY INCURS NO RESPONSIBILITY NOR ANY OBLIGATION WHATSOEVER; AND THE FACT THAT THE GOVERNMENT MAY HAVE FORMULATED, FURNISHED, OR IN ANY WAY SUPPLIED THE SAID DRAWINGS, SPECIFICATIONS, OR OTHER DATA IS NOT TO BE REGARDED BY IMPLICATION OR OTHERWISE AS IN ANY MANNER LICENSING THE HOLDER OR ANY OTHER PERSON OR CORPORATION, OR CONVEYING ANY RIGHTS OR PERMISSION TO MANUFACTURE, USE, OR SELL ANY PATENTED INVENTION THAT MAY IN ANY WAY BE RELATED THERETO.

## SPECIFIC NOTES:

A. "FINAL GRADE" SHALL BE UNDERSTOOD TO REFER TO THE "FINAL EARTHEN GRADE". "TOP OF PAVEMENT SURFACE" OR "TOP OF APRON SLAB", WHICHEVER IS PRESENT. RESTORE SURFACES DISTURBED BY CONSTRUCTION ACTIVITIES TO ORIGINAL CONDITION IN ACCORDANCE WITH THE CONTRACT GOVERNING SURFACE RESTORATION.

B. PROVIDE GROUND RODS ON MAXIMUM 100 FT CENTERS BETWEEN DUCT BANK TERMINATIONS AT MANHOLES/HANDHOLES AND BUILDINGS. BOND COUNTERPOISE GROUNDING CONDUCTOR TO GROUND ROD VIA EXOTHERMIC WELDING PROCESS.

C. REFER TO DRAWING E-415 FOR TOP OF DUCT BANK ELEVATION WHERE DUCT BANK CROSSES UNDER STORM/CONTAINMENT PIPES.

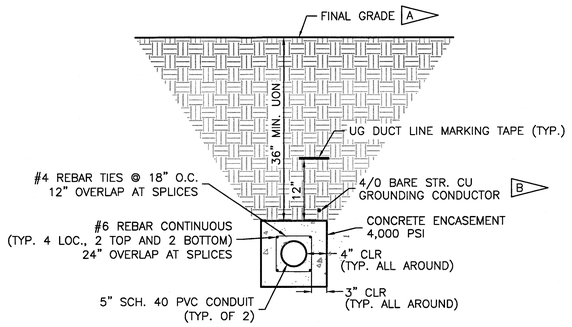


DB TYPE A SECTION (A / E-411)
NOT TO SCALE

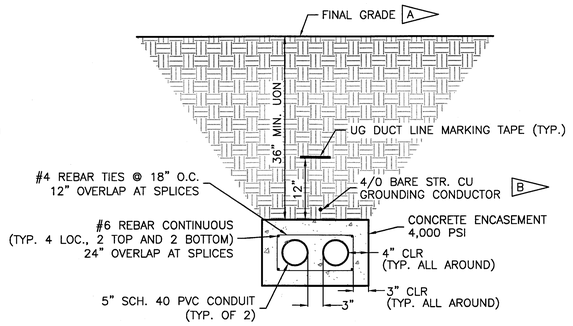


DB TYPE B SECTION (B / E-403, E-413, E-415) C
NOT TO SCALE

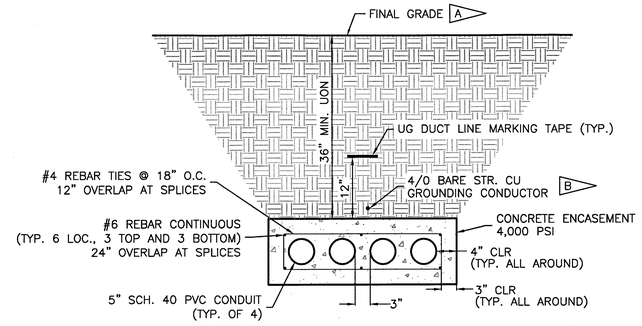


DB TYPE C SECTION (C / E-102, E-103, E-408, E-415)
NOT TO SCALE

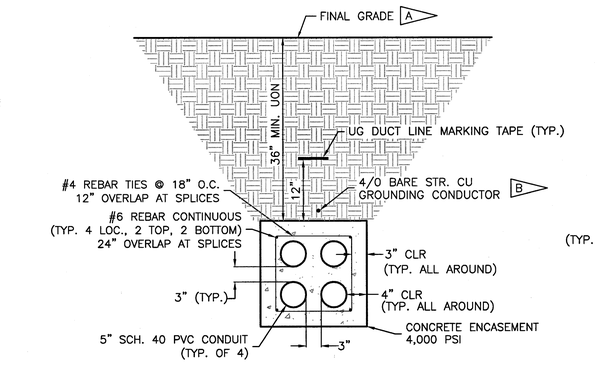


DB TYPE D SECTION (D / E-102, E-108, E-402, E-403, E-404, E-408, E-413, E-415)
NOT TO SCALE

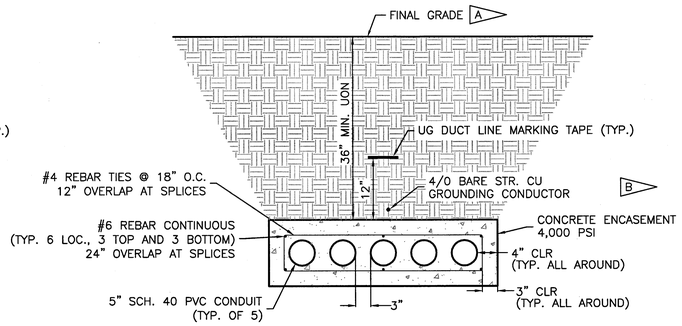


DB TYPE E SECTION (E / E-415) C
NOT TO SCALE

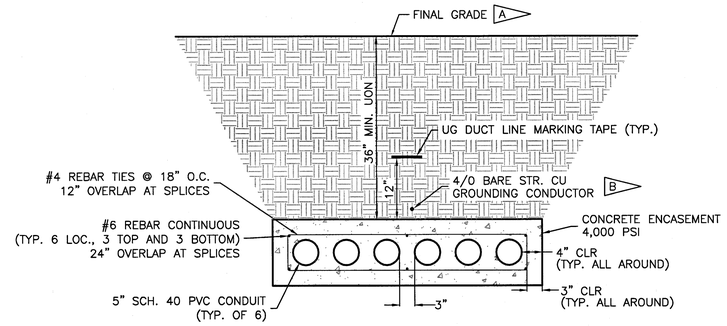


DB TYPE F SECTION (F / E-406, E-415) C
NOT TO SCALE

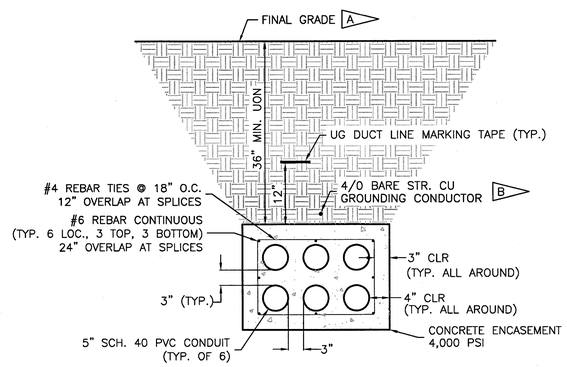


DB TYPE G SECTION (G / E-104, E-108, E-402, E-403, E-406)
NOT TO SCALE

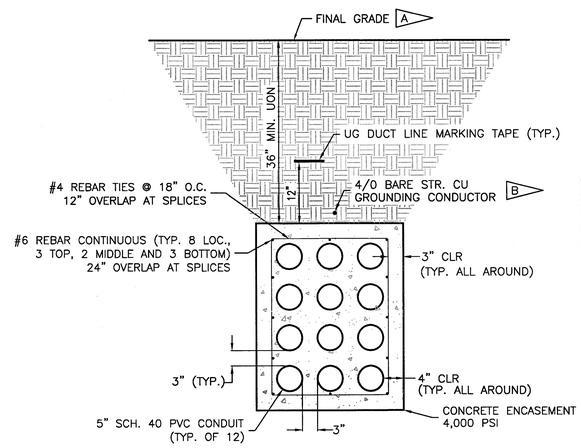


DB TYPE J SECTION (H / E-406, E-415)
NOT TO SCALE

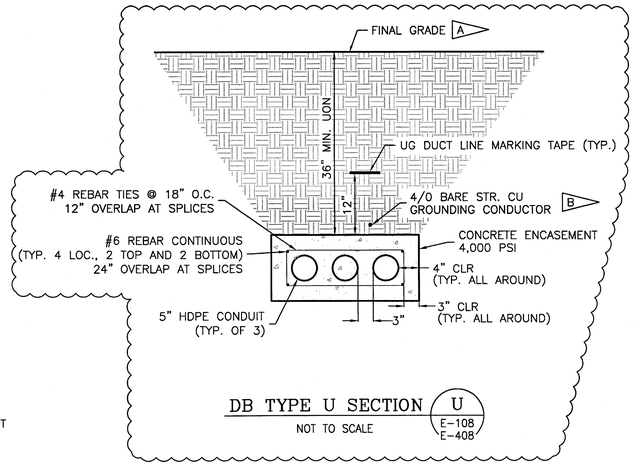


DB TYPE U SECTION (U / E-108, E-408)
NOT TO SCALE

E01-79K39135

SHEET 16 OF 22

| SYM. | ZONE | DESCRIPTION | DATE | APPROVED |
|---|---|---|---|---|
| | | REVISIONS | | |

URS
7650 West Courtney Campbell Causeway
Suite 700
Tampa, Florida 33607
Ph: (813) 285-1711 Fax: (813) 286-6587
FDBPR LICENSE NO. 7285

| SIGNATURES | | DATE |
|---|---|---|
| DRAWN | TRS | 9/24/12 |
| CHECKED | GSK | 9/24/12 |
| SUBMITTED | GLENN H. DAVIS ST OF LICENSURE: FL LICENSE NO.: 66443 | |
| APPROVED | F. WALKER S. MEHTA | |

NATIONAL AERONAUTICS AND SPACE ADMINISTRATION
JOHN F. KENNEDY SPACE CENTER, NASA
KENNEDY SPACE CENTER, FLORIDA

REVITALIZE MEDIUM VOLTAGE
ELECTRICAL DISTRIBUTION SYSTEMS,
INDUSTRIAL AND PAYLOAD PROCESSING AREAS

DUCT BANK SECTIONS

E-515

| FILE NO. | SIZE | DWG. NO. |
|---|---|---|
| | F | 79K39135 |
| PCN NO. 98860 | | SHEET 76 |

T:\NASA KSC\Task 30\Drawings\E-515 DUCT BANK SECTIONS.dwg 01/14/2013 10:03

KSC FORM 1-11A (REV 6/91) (C/G 12/93)

NOTICE — WHEN GOVERNMENT DRAWINGS, SPECIFICATIONS, OR OTHER DATA ARE USED FOR ANY PURPOSE OTHER THAN IN CONNECTION WITH A DEFINITELY RELATED GOVERNMENT PROCUREMENT OPERATION, THE UNITED STATES GOVERNMENT THEREBY INCURS NO RESPONSIBILITY NOR ANY OBLIGATION WHATSOEVER; AND THE FACT THAT THE GOVERNMENT MAY HAVE FORMULATED, FURNISHED, OR IN ANY WAY SUPPLIED THE SAID DRAWINGS, SPECIFICATIONS, OR OTHER DATA IS NOT TO BE REGARDED BY IMPLICATION OR OTHERWISE AS IN ANY MANNER LICENSING THE HOLDER OR ANY OTHER PERSON OR CORPORATION, OR CONVEYING ANY RIGHTS OR PERMISSION TO MANUFACTURE, USE, OR SELL ANY PATENTED INVENTION THAT MAY IN ANY WAY BE RELATED THERETO.

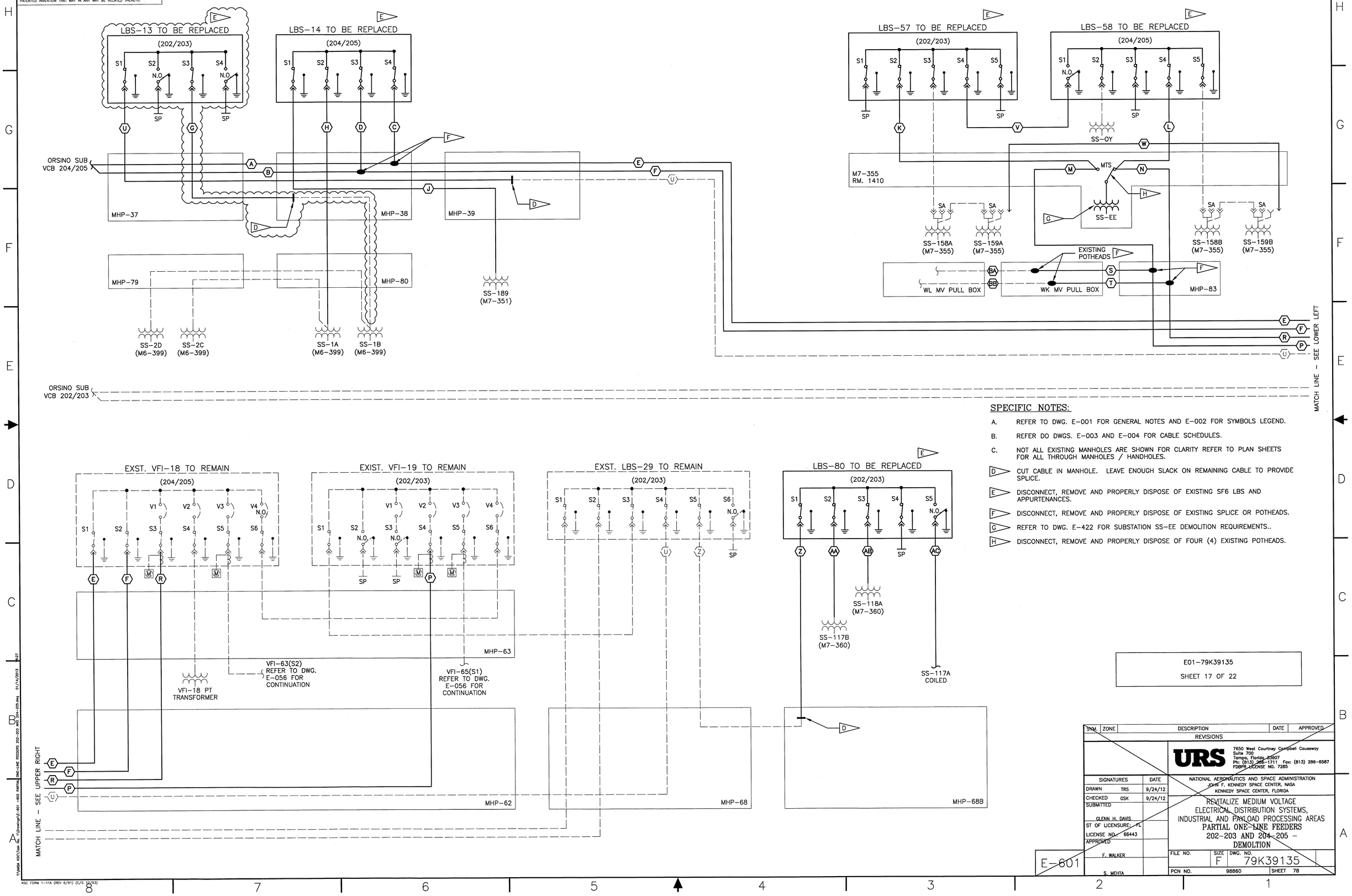


## SPECIFIC NOTES:

A. REFER TO DWG. E-001 FOR GENERAL NOTES AND E-002 FOR SYMBOLS LEGEND.

B. REFER DO DWGS. E-003 AND E-004 FOR CABLE SCHEDULES.

C. NOT ALL EXISTING MANHOLES ARE SHOWN FOR CLARITY REFER TO PLAN SHEETS FOR ALL THROUGH MANHOLES / HANDHOLES.

D. CUT CABLE IN MANHOLE. LEAVE ENOUGH SLACK ON REMAINING CABLE TO PROVIDE SPLICE.

E. DISCONNECT, REMOVE AND PROPERLY DISPOSE OF EXISTING SF6 LBS AND APPURTENANCES.

F. DISCONNECT, REMOVE AND PROPERLY DISPOSE OF EXISTING SPLICE OR POTHEADS.

G. REFER TO DWG. E-422 FOR SUBSTATION SS-EE DEMOLITION REQUIREMENTS..

H. DISCONNECT, REMOVE AND PROPERLY DISPOSE OF FOUR (4) EXISTING POTHEADS.

E01-79K39135

SHEET 17 OF 22

| SYM. | ZONE | DESCRIPTION | DATE | APPROVED |
|---|---|---|---|---|

REVISIONS

URS
7650 West Courtney Campbell Causeway
Suite 700
Tampa, Florida 33607
Ph: (813) 286-1711 Fax: (813) 286-6587
FDBPR LICENSE NO. 7285

| SIGNATURES | | DATE |
|---|---|---|
| DRAWN | TRS | 9/24/12 |
| CHECKED | GSK | 9/24/12 |
| SUBMITTED | | |
| GLENN H. DAVIS | | |
| ST OF LICENSURE: FL | | |
| LICENSE NO.: 66443 | | |
| APPROVED | | |
| F. WALKER | | |
| S. MEHTA | | |

NATIONAL AERONAUTICS AND SPACE ADMINISTRATION
JOHN F. KENNEDY SPACE CENTER, NASA
KENNEDY SPACE CENTER, FLORIDA

REVITALIZE MEDIUM VOLTAGE
ELECTRICAL DISTRIBUTION SYSTEMS,
INDUSTRIAL AND PAYLOAD PROCESSING AREAS
PARTIAL ONE-LINE FEEDERS
202-203 AND 204-205 -
DEMOLITION

E-601

| FILE NO. | SIZE | DWG. NO. |
|---|---|---|
| | F | 79K39135 |
| PCN NO. 98860 | | SHEET 78 |

KSC FORM 1-11A (REV 6/91) (C/G 12/93)

NOTICE – WHEN GOVERNMENT DRAWINGS, SPECIFICATIONS, OR OTHER DATA ARE USED FOR ANY PURPOSE OTHER THAN IN CONNECTION WITH A DEFINITELY RELATED GOVERNMENT PROCUREMENT OPERATION, THE UNITED STATES GOVERNMENT THEREBY INCURS NO RESPONSIBILITY NOR ANY OBLIGATION WHATSOEVER; AND THE FACT THAT THE GOVERNMENT MAY HAVE FORMULATED, FURNISHED, OR IN ANY WAY SUPPLIED THE SAID DRAWINGS, SPECIFICATIONS, OR OTHER DATA IS NOT TO BE REGARDED BY IMPLICATION OR OTHERWISE AS IN ANY MANNER LICENSING THE HOLDER OR ANY OTHER PERSON OR CORPORATION, OR CONVEYING ANY RIGHTS OR PERMISSION TO MANUFACTURE, USE, OR SELL ANY PATENTED INVENTION THAT MAY IN ANY WAY BE RELATED THERETO.

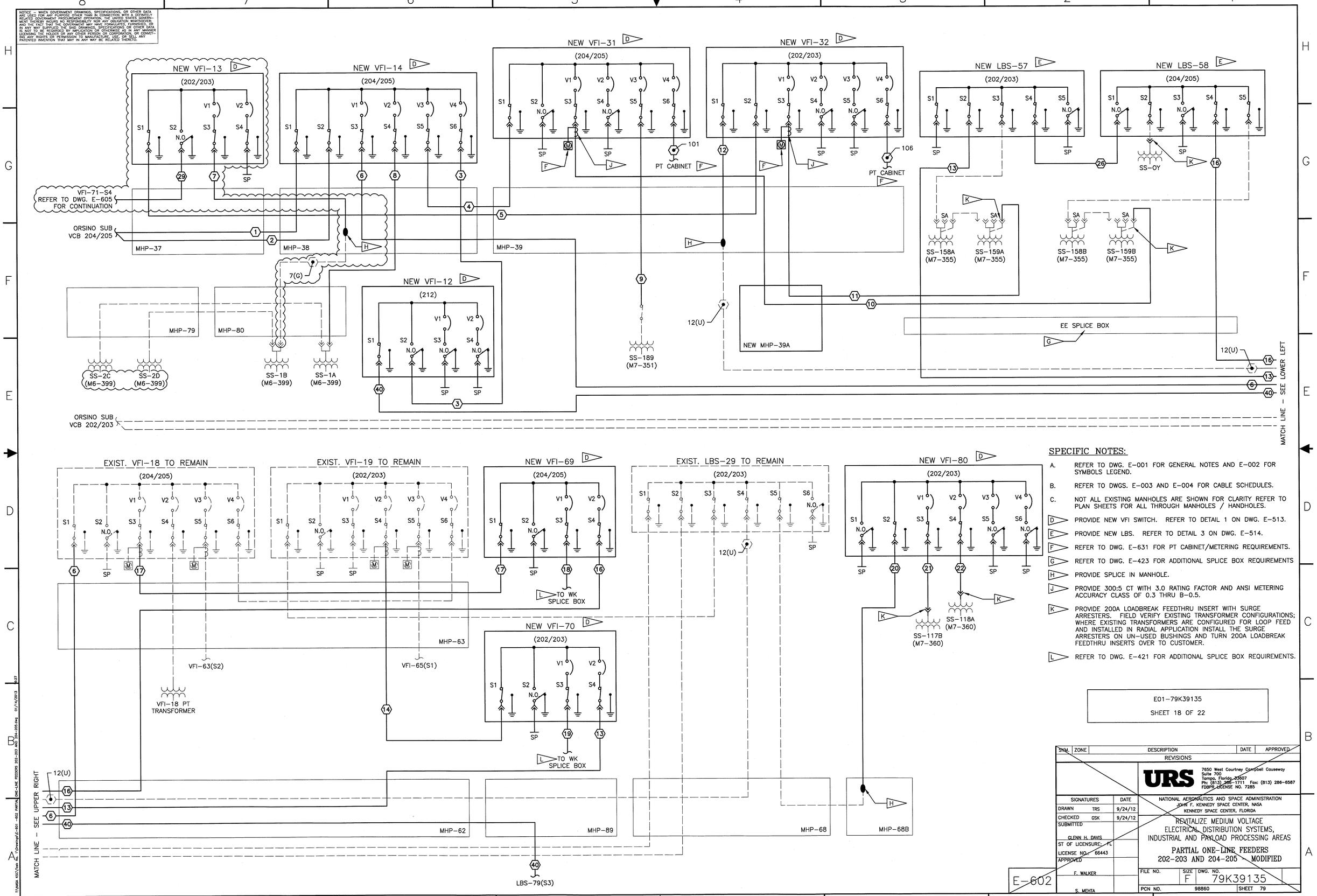


## SPECIFIC NOTES:

A. REFER TO DWG. E-001 FOR GENERAL NOTES AND E-002 FOR SYMBOLS LEGEND.

B. REFER TO DWGS. E-003 AND E-004 FOR CABLE SCHEDULES.

C. NOT ALL EXISTING MANHOLES ARE SHOWN FOR CLARITY REFER TO PLAN SHEETS FOR ALL THROUGH MANHOLES / HANDHOLES.

D ▷ PROVIDE NEW VFI SWITCH. REFER TO DETAIL 1 ON DWG. E-513.

E ▷ PROVIDE NEW LBS. REFER TO DETAIL 3 ON DWG. E-514.

F ▷ REFER TO DWG. E-631 FOR PT CABINET/METERING REQUIREMENTS.

G ▷ REFER TO DWG. E-423 FOR ADDITIONAL SPLICE BOX REQUIREMENTS

H ▷ PROVIDE SPLICE IN MANHOLE.

J ▷ PROVIDE 300:5 CT WITH 3.0 RATING FACTOR AND ANSI METERING ACCURACY CLASS OF 0.3 THRU B-0.5.

K ▷ PROVIDE 200A LOADBREAK FEEDTHRU INSERT WITH SURGE ARRESTERS. FIELD VERIFY EXISTING TRANSFORMER CONFIGURATIONS; WHERE EXISTING TRANSFORMERS ARE CONFIGURED FOR LOOP FEED AND INSTALLED IN RADIAL APPLICATION INSTALL THE SURGE ARRESTERS ON UN-USED BUSHINGS AND TURN 200A LOADBREAK FEEDTHRU INSERTS OVER TO CUSTOMER.

L ▷ REFER TO DWG. E-421 FOR ADDITIONAL SPLICE BOX REQUIREMENTS.

E01-79K39135

SHEET 18 OF 22

| SYM. | ZONE | DESCRIPTION | DATE | APPROVED |
|---|---|---|---|---|
| | | REVISIONS | | |

URS
7650 West Courtney Campbell Causeway
Suite 700
Tampa, Florida 33607
Ph: (813) 286-1711 Fax: (813) 286-6587
FDBPR LICENSE NO. 7285

| SIGNATURES | | DATE |
|---|---|---|
| DRAWN | TRS | 9/24/12 |
| CHECKED | GSK | 9/24/12 |
| SUBMITTED | GLENN H. DAVIS | |
| ST OF LICENSURE: FL | | |
| LICENSE NO.: 66443 | | |
| APPROVED | F. WALKER | |
| | S. MEHTA | |

NATIONAL AERONAUTICS AND SPACE ADMINISTRATION
JOHN F. KENNEDY SPACE CENTER, NASA
KENNEDY SPACE CENTER, FLORIDA

REVITALIZE MEDIUM VOLTAGE ELECTRICAL DISTRIBUTION SYSTEMS, INDUSTRIAL AND PAYLOAD PROCESSING AREAS

PARTIAL ONE-LINE FEEDERS 202-203 AND 204-205 – MODIFIED

E-602

| FILE NO. | SIZE | DWG. NO. | |
|---|---|---|---|
| | F | 79K39135 | |
| PCN NO. | 98860 | SHEET 79 | |

KSC FORM 1-11A (REV 6/91) (C/G 12/93)

NOTICE – WHEN GOVERNMENT DRAWINGS, SPECIFICATIONS, OR OTHER DATA ARE USED FOR ANY PURPOSE OTHER THAN IN CONNECTION WITH A DEFINITELY RELATED GOVERNMENT PROCUREMENT OPERATION, THE UNITED STATES GOVERNMENT THEREBY INCURS NO RESPONSIBILITY NOR ANY OBLIGATION WHATSOEVER; AND THE FACT THAT THE GOVERNMENT MAY HAVE FORMULATED, FURNISHED, OR IN ANY WAY SUPPLIED THE SAID DRAWINGS, SPECIFICATIONS, OR OTHER DATA IS NOT TO BE REGARDED BY IMPLICATION OR OTHERWISE AS IN ANY MANNER LICENSING THE HOLDER OR ANY OTHER PERSON OR CORPORATION, OR CONVEYING ANY RIGHTS OR PERMISSION TO MANUFACTURE, USE, OR SELL ANY PATENTED INVENTION THAT MAY IN ANY WAY BE RELATED THERETO.

## SPECIFIC NOTES:

A. REFER TO DWG. E-001 FOR GENERAL NOTES AND E-002 FOR SYMBOLS LEGEND.

B. REFER TO DWGS. E-003 AND E-004 FOR CABLE SCHEDULES.

C. NOT ALL EXISTING MANHOLES ARE SHOWN FOR CLARITY REFER TO PLAN SHEETS FOR ALL THROUGH MANHOLES / HANDHOLES.

D. PROVIDE NEW VFI SWITCH. REFER TO DETAIL 1 ON DWG. E-513.

E. CUT CABLE IN MANHOLE. LEAVE ENOUGH SLACK ON REMAINING CABLE TO PROVIDE SPLICE.

F. PROVIDE SPLICE IN MANHOLE.

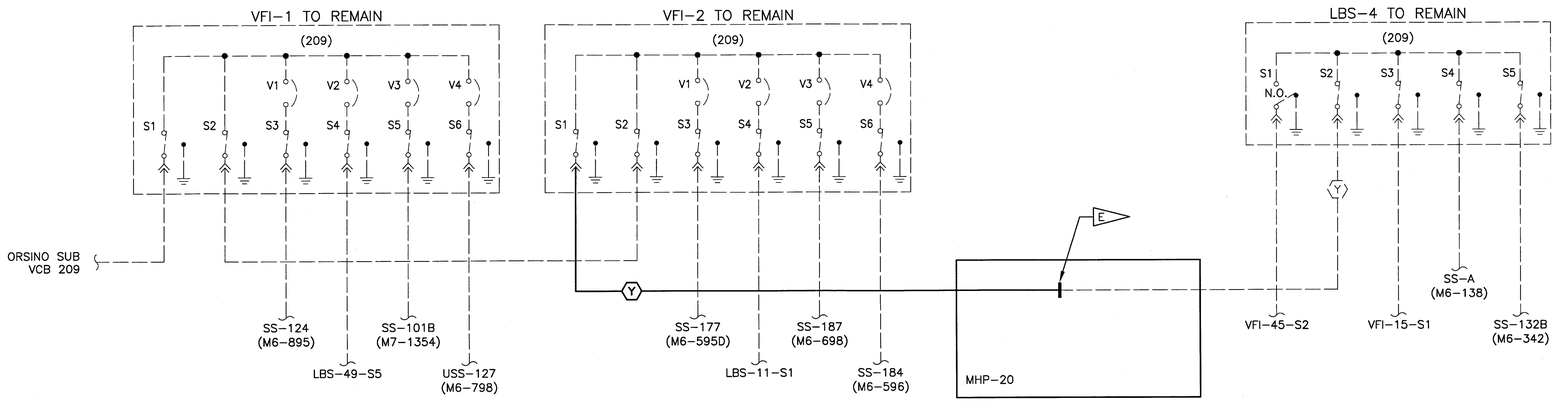


PARTIAL ONE-LINE FEEDER 209 – DEMOLITION (1 / E-605)

NOT TO SCALE

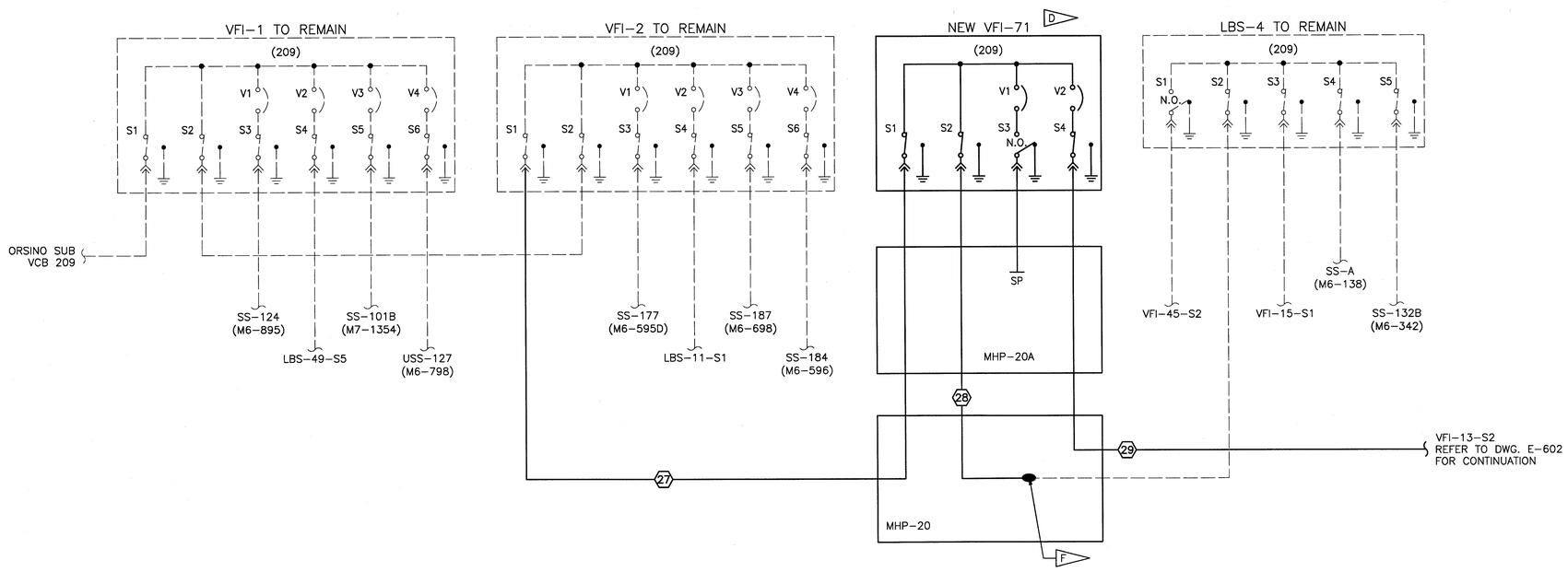


PARTIAL ONE-LINE FEEDER 209 – MODIFIED (2 / E-605)

NOT TO SCALE

MATCH LINE – SEE UPPER RIGHT

E01-79K39135

SHEET 19 OF 22

| SYM. | ZONE | DESCRIPTION | DATE | APPROVED |
|---|---|---|---|---|
| | | REVISIONS | | |

URS
7650 West Courtney Campbell Causeway
Suite 700
Tampa, Florida 33607
Ph: (813) 286-1711 Fax: (813) 286-6587
FDBPR LICENSE NO. 7285

| SIGNATURES | | DATE |
|---|---|---|
| DRAWN | TRS | 9/24/12 |
| CHECKED | GSK | 9/24/12 |
| SUBMITTED | GLENN H. DAVIS | 1/15/2013 |
| ST OF LICENSURE: FL | | |
| LICENSE NO.: 66443 | | |
| APPROVED | F. WALKER | 1/15/13 |
| | S. MEHTA | 1/17/13 |

NATIONAL AERONAUTICS AND SPACE ADMINISTRATION
JOHN F. KENNEDY SPACE CENTER, NASA
KENNEDY SPACE CENTER, FLORIDA

REVITALIZE MEDIUM VOLTAGE
ELECTRICAL DISTRIBUTION SYSTEMS,
INDUSTRIAL AND PAYLOAD PROCESSING AREAS

PARTIAL ONE-LINE FEEDER 209 –
DEMOLITION AND MODIFIED

| FILE NO. | SIZE | DWG. NO. |
|---|---|---|
| | F | 79K39135 |
| PCN NO. 98860 | | SHEET |

E-605

KSC FORM 1-11A (REV 6/91) (C/G 12/93)

T:\NASA KSC\Task 30_1\Drawings\E-605_PARTIAL_ONE_LINE_FEEDER_209_-_DEMOLITION_AND_MODIFIED.dwg 01/14/2013 16:28

NOTICE – WHEN GOVERNMENT DRAWINGS, SPECIFICATIONS, OR OTHER DATA ARE USED FOR ANY PURPOSE OTHER THAN IN CONNECTION WITH A DEFINITELY RELATED GOVERNMENT PROCUREMENT OPERATION, THE UNITED STATES GOVERNMENT THEREBY INCURS NO RESPONSIBILITY NOR ANY OBLIGATION WHATSOEVER; AND THE FACT THAT THE GOVERNMENT MAY HAVE FORMULATED, FURNISHED, OR IN ANY WAY SUPPLIED THE SAID DRAWINGS, SPECIFICATIONS, OR OTHER DATA IS NOT TO BE REGARDED BY IMPLICATION OR OTHERWISE AS IN ANY MANNER LICENSING THE HOLDER OR ANY OTHER PERSON OR CORPORATION, OR CONVEYING ANY RIGHTS OR PERMISSION TO MANUFACTURE, USE, OR SELL ANY PATENTED INVENTION THAT MAY IN ANY WAY BE RELATED THERETO.

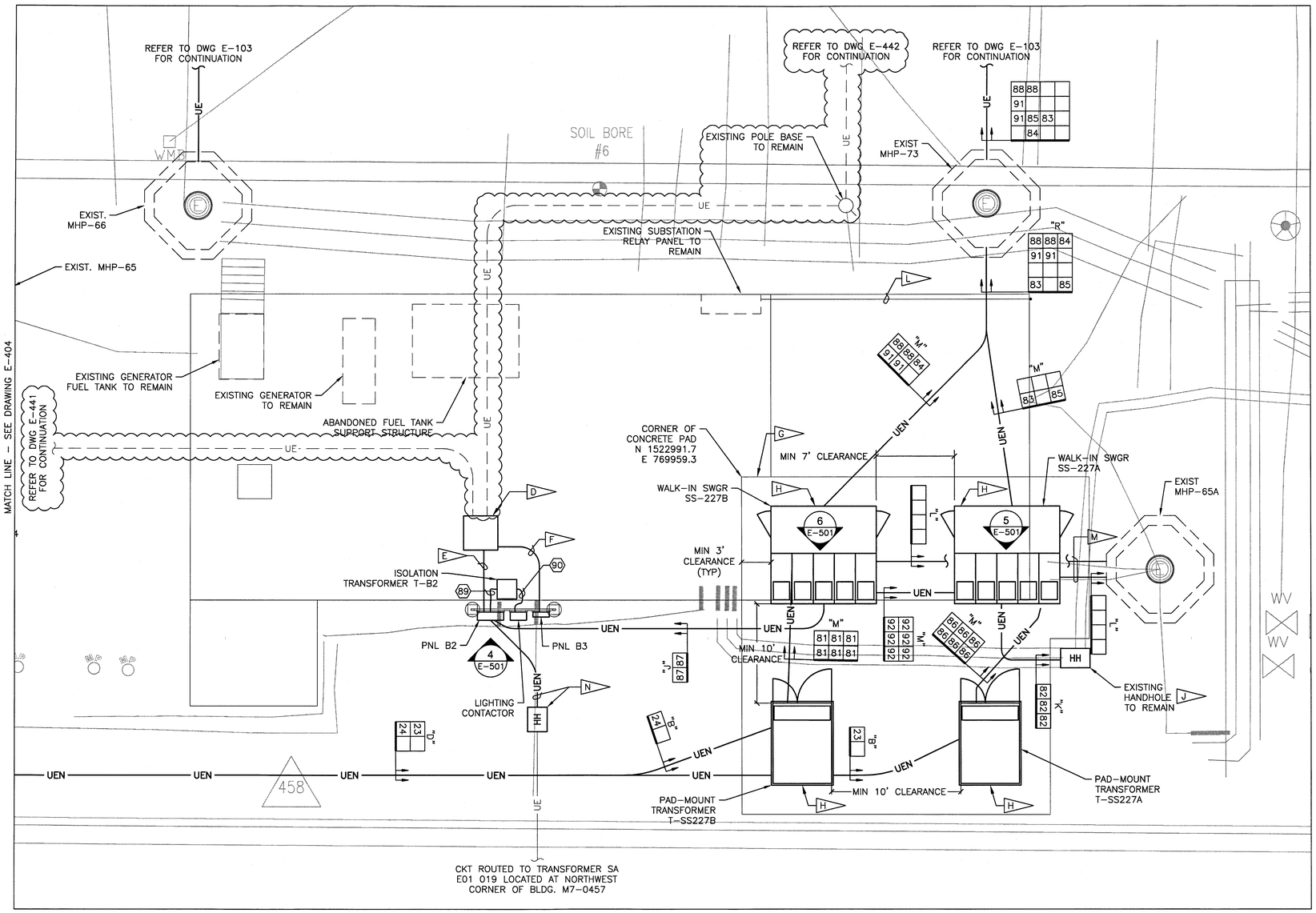


## ENLARGED PLAN – MODIFIED (1 / E-103)

SCALE 1" = 5' – 0"

GRAPHIC SCALE

1" = 5'-0"  0' 5' 10' 15'

## SPECIFIC NOTES:

A. REFER TO DWG. E-001 FOR GENERAL NOTES AND E-002 FOR SYMBOLS LEGEND.

B. REFER TO DWG. E-003 AND E-004 FOR CABLE SCHEDULES. REFER TO DWG. E-641 FOR PANEL SCHEDULES.

C. REFER TO DETAIL 1 ON DWG. E-503 FOR ADDITIONAL REQUIREMENTS REGARDING SUBSTATIONS SS-A AND SS-B EQUIPMENT, RACEWAYS AND GROUNDING.

D. PROVIDE 42" W SQ. BY 30" D. 316SS WEATHERPROOF HINGED COVER PULL BOX. POSITION PULL BOX DIRECTLY OVER TOP OF THE EXISTING CONDUIT STUB UPS, AND ANCHOR TO EXISTING CONCRETE EQUIPMENT PAD AT EACH CORNER USING 3/8" DIA. SS HARDWARE. SHIM PULL BOX ABOVE CONCRETE PAD USING SS WASHERS. SPLICE NEW CIRCUITS TO EXISTING CIRCUITS INSIDE THE SPLICE BOX USING SPLIT BOLT TYPE CONNECTORS AND BUILT-UP VINYL ELECTRICAL TAPE INSULATION. PRESERVE ADEQUATE AMOUNT OF EXISTING FEEDER WIRE TO PERFORM SPLICE AND INCLUDE A SERVICE LOOP. PROVIDE 2-COAT EPOXY PAINT FINISH ON PORTION OF RACEWAY SYSTEM ROUTED EXPOSED ALONG THE CONCRETE EQUIPMENT PAD. PAINT COLOR SHALL BE SAFETY YELLOW PER NASA STANDARD. PROVIDE ELECTRICAL HAZARD SIGN CENTERED ON THE PULL BOX COVER. ELECTRICAL HAZARD SIGN SHALL BE POLYESTER SELF- ADHESIVE MANUFACTURED TYPE WITH "DANGER 480 VOLTS" LEGEND.

E. PROVIDE (1) 2" GRS CONDUIT ROUTED EXPOSED BETWEEN PNL B2 AND PULL BOX. SPLICE EXISTING TRAFFIC LIGHT CIRCUIT AND EXTEND TO PANEL B2.

F. PROVIDE TWO(2) 2" GRS CONDUITS ROUTED EXPOSED BETWEEN PNL B3 AND PULL BOX. SPLICE EXISTING PARKING LOT CIRCUITS AND EXTEND TO PANEL B3. PROVIDE #6 AWG EQUIPMENT GROUNDING CONDUCTOR IN EACH CONDUIT.

G. PROVIDE CONCRETE EQUIPMENT PAD THAT EXTENDS A MINIMUM OF 3' BETWEEN EQUIPMENT ENCLOSURES AND EDGE OF PAD. REFER TO STRUCTURAL DRAWINGS FOR ADDITIONAL PAD REQUIREMENTS.

H. REFER TO REFER TO S-102 FOR CONCRETE EQUIPMENT PAD REQUIREMENTS.

J. SPLICE NEW FEEDER "82" TO EXISTING FEEDER INSIDE THE HANDHOLE USING SPLIT BOLT TYPE CONNECTORS AND BUILT-UP VINYL ELECTRICAL TAPE INSULATION. PRESERVE ADEQUATE AMOUNT OF EXISTING FEEDER WIRE TO PERFORM SPLICE.

K. <NOT USED>

L. EXISTING CONTROL CABLING IN GRS CONDUIT ROUTED EXPOSED TO REMAIN.

M. TWO(2) TYPE "L" DUCT BANKS BETWEEN MHP-65A AND SS-227A AND SS-227B ARE RESERVED FOR FUTURE COOLING TOWER ELECTRICAL DISTRIBUTION LOADS.

N. PROVIDE 30"L X 24"W X 18"D MINIMUM HANDHOLE. REFER TO DETAIL 2 ON DWG. E-514. PROVIDE 3" CONDUIT BETWEEN PANEL B2 AND HANDHOLE. SPLICE NEW FEEDER TO EXISTING FEEDER INSIDE THE HANDHOLE USING SPLIT BOLT TYPE CONNECTORS AND BUILT-UP VINYL ELECTRICAL TAPE INSULATION AND EXTEND TO PANEL B2. PROVIDE SCH. 80 PVC CONDUIT WHERE DIRECT BURIED AND GRS CONDUIT WHERE EXPOSED. WHERE CONDUIT IS DIRECT BURIED, PROVIDE A MINIMUM OF 24" EARTH COVER. TRANSITION SCH. 80 PVC CONDUIT TO PVC COATED GRS CONDUIT AT LAST 90 DEG. ELBOW BEFORE RISING UP AND EMERGING FROM GRADE.

E01-79K39135

SHEET 20 OF 22

| SYM. | ZONE | DESCRIPTION | DATE | APPROVED |
|---|---|---|---|---|
| | | REVISIONS | | |

URS
7650 West Courtney Campbell Causeway
Suite 700
Tampa, Florida 33607
Ph: (813) 286-1711 Fax: (813) 286-6587
FDBPR LICENSE NO. 7285

| SIGNATURES | | DATE |
|---|---|---|
| DRAWN | TRS | 9/24/12 |
| CHECKED | GSK | 9/24/12 |
| SUBMITTED | GLENN H. DAVIS ST OF LICENSURE: FL LICENSE NO.: 66443 | |
| APPROVED | F. WALKER | |
| | S. MEHTA | |

NATIONAL AERONAUTICS AND SPACE ADMINISTRATION
JOHN F. KENNEDY SPACE CENTER, NASA
KENNEDY SPACE CENTER, FLORIDA

REVITALIZE MEDIUM VOLTAGE ELECTRICAL DISTRIBUTION SYSTEMS, INDUSTRIAL AND PAYLOAD PROCESSING AREAS
ENLARGED SITE PLAN – SUBSTATION SS 227A & SS 227B – MODIFIED

E-413

| FILE NO. | SIZE | DWG. NO. |
|---|---|---|
| | F | 79K39135 |
| PCN NO. 98860 | | SHEET 55 |

T:\NASA KSC\Task No. \Userlogin\E-413 ENLARGED SIT PLANS - SS-A & B - NEW.dwg 01/14/2013 16:28

KSC FORM 1-11A (REV 6/91) (C/G 12/93)

NOTICE – WHEN GOVERNMENT DRAWINGS, SPECIFICATIONS, OR OTHER DATA ARE USED FOR ANY PURPOSE OTHER THAN IN CONNECTION WITH A DEFINITELY RELATED GOVERNMENT PROCUREMENT OPERATION, THE UNITED STATES GOVERNMENT THEREBY INCURS NO RESPONSIBILITY NOR ANY OBLIGATION WHATSOEVER; AND THE FACT THAT THE GOVERNMENT MAY HAVE FORMULATED, FURNISHED, OR IN ANY WAY SUPPLIED THE SAID DRAWINGS, SPECIFICATIONS, OR OTHER DATA IS NOT TO BE REGARDED BY IMPLICATION OR OTHERWISE AS IN ANY MANNER LICENSING THE HOLDER OR ANY OTHER PERSON OR CORPORATION, OR CONVEYING ANY RIGHTS OR PERMISSION TO MANUFACTURE, USE, OR SELL ANY PATENTED INVENTION THAT MAY IN ANY WAY BE RELATED THERETO.

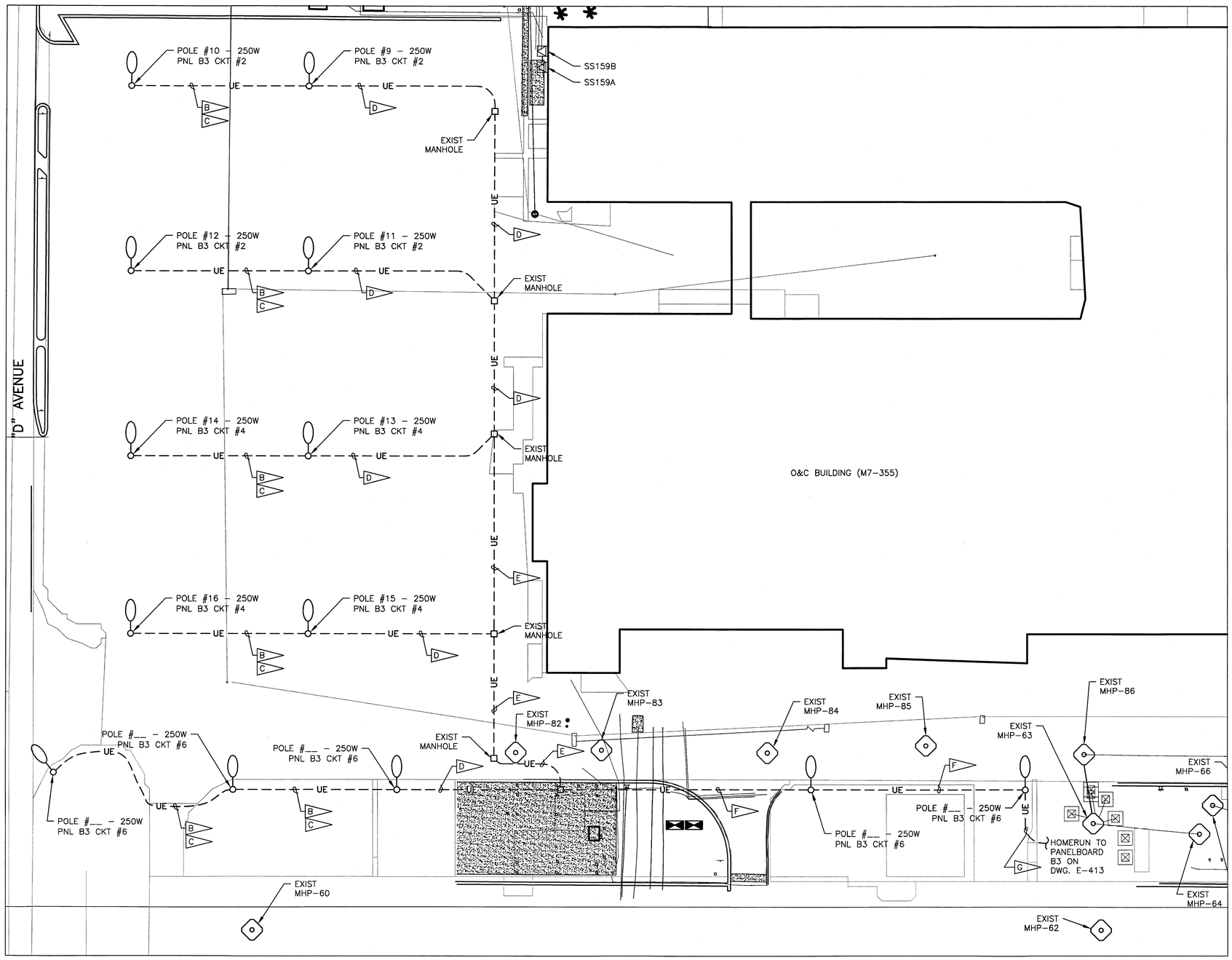


## ENLARGED PLAN WEST O&C (M7-355) PARKING LOT LIGHTING – MODIFIED (1 / E-102)

SCALE 1" = 30'

N

GRAPHIC SCALE

0' 15' 30' 60' 90'

1" = 30'-0"

## SPECIFIC NOTES:

A. REFER TO DWG. E-001 FOR GENERAL NOTES AND E-002 FOR SYMBOLS LEGEND.

B. DISCONNECT, REMOVE AND PROPERLY DISPOSE OF EXISTING 1#8AWG PH, 1#8AWG NEUT. AND 1#10 AWG GND. CONDUCTORS.

C. PROVIDE 1#8AWG PH., 1#8AWG NEUT. AND 1#8AWG GND RHW INSULATED CONDUCTORS IN EXISTING 1" CONDUIT BETWEEN POLE BASES.

D. REWORK CIRCUITING OF EXISTING 4#6AWG XHW AND 1#10AWG THHN CONDUCTORS RESULTING IN 1#6AWG PH., 1#6AWG NEUT., 1#6AWG GND., 1#6AWG SPARE AND 1#10AWG SPARE. PROVIDE GREEN PHASING TAPE ON EQUIPMENT GROUNDING CONDUCTOR COMPLETELY COVERING VISIBLE LENGTH OF CONDUCTOR IN THE POLE BASE.

E. REWORK CIRCUITING OF EXISTING CONDUCTORS RESULTING IN FOLLOWING ACTIVE CONDUCTORS: 2#6AWG PH., 2#6AWG NEUT. AND 1#6AWG GND. AND ANY REMAINING CONDUCTORS LEFT AS SPARE. PROVIDE GREEN PHASING TAPE ON EQUIPMENT GROUNDING CONDUCTORS COMPLETELY COVERING VISIBLE LENGTH OF CONDUCTOR IN THE POLE BASE.

F. REWORK CIRCUITING OF EXISTING CONDUCTORS RESULTING IN FOLLOWING ACTIVE CONDUCTORS: 3#6AWG PH., 3#6AWG NEUT. AND 1#6AWG GND. AND ANY REMAINING CONDUCTORS LEFT AS SPARE. PROVIDE GREEN PHASING TAPE ON EQUIPMENT GROUNDING CONDUCTORS COMPLETELY COVERING VISIBLE LENGTH OF CONDUCTOR IN THE POLE BASE.

G. REWORK CIRCUITING OF EXISTING CONDUCTORS, BETWEEN LIGHT POLE BASE AND PANELBOARD B3 VIA NEW PULL BOX, RESULTING IN FOLLOWING ACTIVE CONDUCTORS: 3#6AWG PH., 3#6AWG NEUT. AND 1#6AWG GND. AND ANY REMAINING CONDUCTORS LEFT AS SPARE. PROVIDE GREEN PHASING TAPE ON EQUIPMENT GROUNDING CONDUCTORS COMPLETELY COVERING VISIBLE LENGTH OF CONDUCTOR IN THE POLE BASE.

H. THE INTENT OF THE PARKING LOT LIGHTING CIRCUIT REWORK IS TO COMPLY WITH 2011 NEC ARTICLE 250.122(B) RESULTING IN GROUND CONDUCTORS BEING THE SAME SIZE AS THE LARGEST PHASE CONDUCTOR IN EACH CONDUIT.

I. BOND #6 AWG EQUIPMENT GROUNDING CONDUCTOR TO MANHOLE AND POLE EARTH GROUNDS.

E01-79K39135

SHEET 21 OF 22

| SYM. | ZONE | DESCRIPTION | DATE | APPROVED |
|---|---|---|---|---|

REVISIONS

URS
7650 West Courtney Campbell Causeway
Suite 700
Tampa, Florida 33607
Ph: (813) 286-1711 Fax: (813) 286-6587
FDBPR LICENSE NO. 7285

| SIGNATURES | | DATE |
|---|---|---|
| DRAWN | TRS | 9/24/12 |
| CHECKED | GSK | 9/24/12 |
| SUBMITTED | GLENN H. DAVIS | 1/15/2013 |
| ST OF LICENSURE: FL | | |
| LICENSE NO.: 66443 | | |
| APPROVED | F. WALKER | 1/15/13 |
| | S. MEHTA | 1/17/13 |

NATIONAL AERONAUTICS AND SPACE ADMINISTRATION
JOHN F. KENNEDY SPACE CENTER, NASA
KENNEDY SPACE CENTER, FLORIDA

REVITALIZE MEDIUM VOLTAGE ELECTRICAL DISTRIBUTION SYSTEMS, INDUSTRIAL AND PAYLOAD PROCESSING AREAS

O&C PARKING LOT WEST – LIGHTING

| FILE NO. | SIZE | DWG. NO. |
|---|---|---|
| | F | 79K39135 |
| PCN NO. 98860 | | SHEET |

E-441

KSC FORM 1-11A (REV 6/91) (C/G 2/93)

T:\NASA KSC\Task 06-1\Drawings\E-441 E-442 O&C Parking Lot.dwg 01/14/2013 8:08

NOTICE – WHEN GOVERNMENT DRAWINGS, SPECIFICATIONS, OR OTHER DATA ARE USED FOR ANY PURPOSE OTHER THAN IN CONNECTION WITH A DEFINITELY RELATED GOVERNMENT PROCUREMENT OPERATION, THE UNITED STATES GOVERNMENT THEREBY INCURS NO RESPONSIBILITY NOR ANY OBLIGATION WHATSOEVER; AND THE FACT THAT THE GOVERNMENT MAY HAVE FORMULATED, FURNISHED, OR IN ANY WAY SUPPLIED THE SAID DRAWINGS, SPECIFICATIONS, OR OTHER DATA IS NOT TO BE REGARDED BY IMPLICATION OR OTHERWISE AS IN ANY MANNER LICENSING THE HOLDER OR ANY OTHER PERSON OR CORPORATION, OR CONVEYING ANY RIGHTS OR PERMISSION TO MANUFACTURE, USE, OR SELL ANY PATENTED INVENTION THAT MAY IN ANY WAY BE RELATED THERETO.

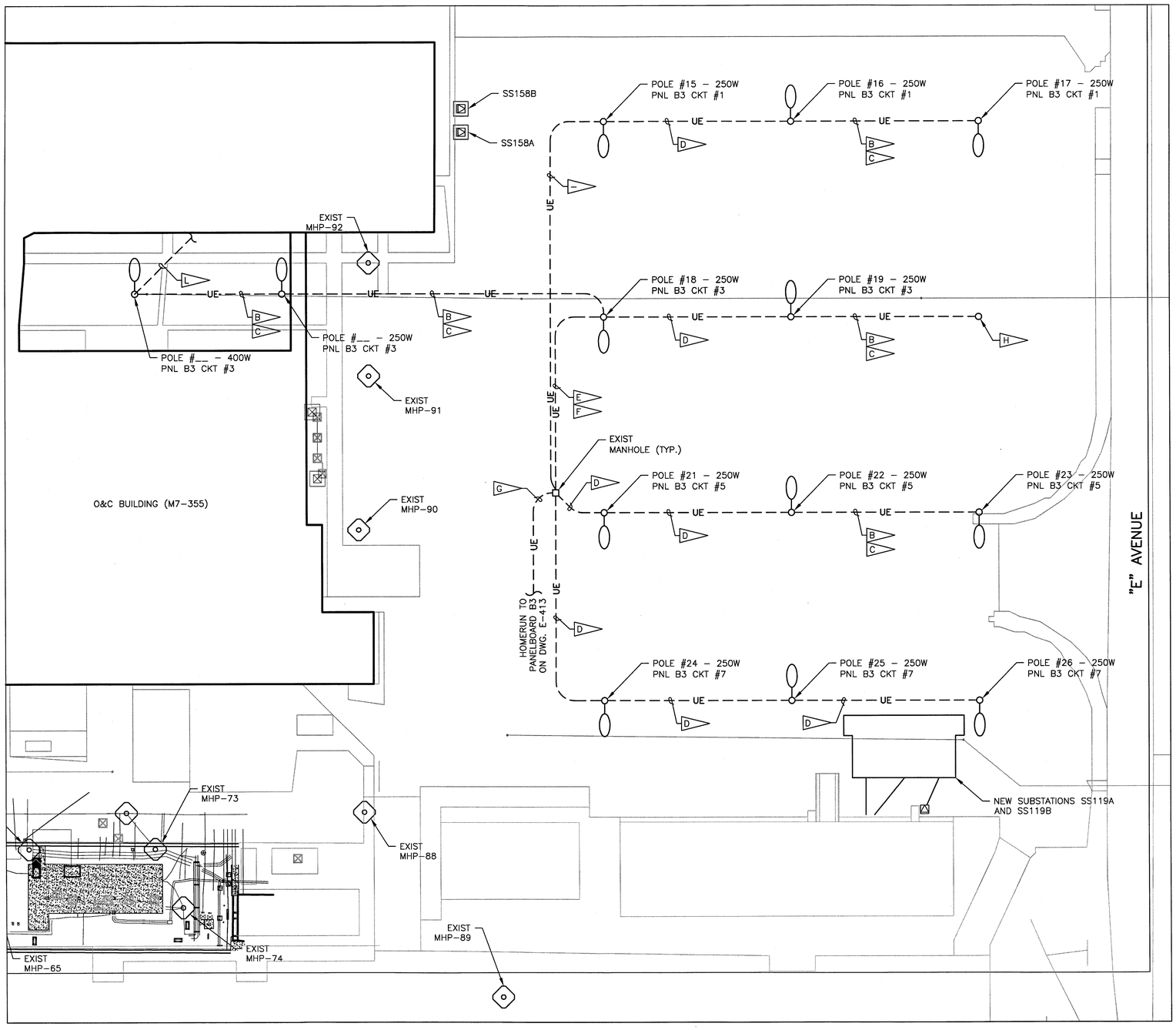


ENLARGED PLAN EAST O&C (M7–355) PARKING LOT LIGHTING – MODIFIED (1 / E–103 / E–104)

SCALE 1" = 30'

N

GRAPHIC SCALE

0' 15' 30' 60' 90'

1" = 30'–0"

## SPECIFIC NOTES:

A. REFER TO DWG. E–001 FOR GENERAL NOTES AND E–002 FOR SYMBOLS LEGEND.

B. DISCONNECT, REMOVE AND PROPERLY DISPOSE OF EXISTING 1#8AWG PH, 1#8AWG NEUT. AND 1#12 AWG GND. CONDUCTORS.

C. PROVIDE 1#8AWG PH., 1#8AWG NEUT. AND 1#8AWG GND RHW INSULATED CONDUCTORS IN EXISTING 1" CONDUIT BETWEEN POLE BASES.

D. REWORK CIRCUITING OF EXISTING 4#6AWG XHW AND 1#10AWG THHN CONDUCTORS RESULTING IN 1#6AWG PH., 1#6AWG NEUT., 1#6AWG GND., 1#6AWG SPARE AND 1#10AWG SPARE. PROVIDE GREEN PHASING TAPE ON EQUIPMENT GROUNDING CONDUCTOR COMPLETELY COVERING VISIBLE LENGTH OF CONDUCTOR IN THE POLE BASE.

E. DISCONNECT, REMOVE AND PROPERLY DISPOSE OF EXISTING 3#6AWG XHW AND 1#12AWG THWN GND. CONDUCTORS BETWEEN EXISTING HANDHOLE AND POLE #18 BASE.

F. PROVIDE 2#6AWG PH., 2#6AWG NEUT. AND 1#6AWG GND RHW INSULATED CONDUCTORS IN EXISTING 1–1/2" CONDUIT BETWEEN EXISTING HANDHOLE AND POLE #18 BASE

G. REWORK CIRCUITING OF EXISTING CONDUCTORS BETWEEN MANHOLE AND PANELBOARD B3 RESULTING IN FOLLOWING ACTIVE CONDUCTORS: 4#6AWG PH., 4#6AWG NEUT. AND 1#6AWG GND. AND ANY REMAINING CONDUCTORS LEFT AS SPARE. PROVIDE GREEN PHASING TAPE ON EQUIPMENT GROUNDING CONDUCTORS COMPLETELY COVERING VISIBLE LENGTH OF CONDUCTOR IN THE POLE BASE.

H. EXISTING POLE BASE WITHOUT POLE AND FIXTURE.

J. THE INTENT OF THE PARKING LOT LIGHTING CIRCUIT REWORK IS TO COMPLY WITH 2011 NEC ARTICLE 250.122(B) RESULTING IN GROUND CONDUCTORS BEING THE SAME SIZE AS THE LARGEST PHASE CONDUCTOR IN EACH CONDUIT.

K. BOND #6 AWG EQUIPMENT GROUNDING CONDUCTOR TO MANHOLE AND POLE EARTH GROUNDS.

L. DE–ENERGIZE, DISCONNECT AT POLE BASE AND ABANDON EXISTING CONDUCTORS IN PLACE.

E01–79K39135

SHEET 22 OF 22

| SYM. | ZONE | DESCRIPTION | DATE | APPROVED |
|---|---|---|---|---|
| | | REVISIONS | | |

URS
7650 West Courtney Campbell Causeway
Suite 700
Tampa, Florida 33607
Ph: (813) 286–1711 Fax: (813) 286–6587
FDBPR LICENSE NO. 7285

| SIGNATURES | | DATE |
|---|---|---|
| DRAWN | TRS | 9/24/12 |
| CHECKED | GSK | 9/24/12 |
| SUBMITTED | GLENN H. DAVIS | 1/15/2013 |
| ST OF LICENSURE: FL | | |
| LICENSE NO.: 66443 | | |
| APPROVED | F. WALKER | 1/15/13 |
| | S. MEHTA | 1/10/13 |

NATIONAL AERONAUTICS AND SPACE ADMINISTRATION
JOHN F. KENNEDY SPACE CENTER, NASA
KENNEDY SPACE CENTER, FLORIDA

REVITALIZE MEDIUM VOLTAGE
ELECTRICAL DISTRIBUTION SYSTEMS,
INDUSTRIAL AND PAYLOAD PROCESSING AREAS

O&C PARKING LOT EAST – LIGHTING

| FILE NO. | SIZE | DWG. NO. |
|---|---|---|
| | F | 79K39135 |
| PCN NO. | 98860 | SHEET |

E–442

KSC FORM 1–11A (REV 6/91) (C/G 12/93)