NOTICE – WHEN GOVERNMENT DRAWINGS, SPECIFICATIONS, OR OTHER DATA ARE USED FOR ANY PURPOSE OTHER THAN IN CONNECTION WITH A DEFINITELY RELATED GOVERNMENT PROCUREMENT OPERATION, THE UNITED STATES GOVERNMENT THEREBY INCURS NO RESPONSIBILITY NOR ANY OBLIGATION WHATSOEVER; AND THE FACT THAT THE GOVERNMENT MAY HAVE FORMULATED, FURNISHED, OR IN ANY WAY SUPPLIED THE SAID DRAWINGS, SPECIFICATIONS, OR OTHER DATA IS NOT TO BE REGARDED BY IMPLICATION OR OTHERWISE AS IN ANY MANNER LICENSING THE HOLDER OR ANY OTHER PERSON OR CORPORATION, OR CONVEYING ANY RIGHTS OR PERMISSION TO MANUFACTURE, USE, OR SELL ANY PATENTED INVENTION THAT MAY IN ANY WAY BE RELATED THERETO.

REVITALIZE MEDIUM VOLTAGE ELECTRICAL DISTRIBUTION SYSTEMS, INDUSTRIAL AND PAYLOAD PROCESSING AREAS

PCN – 98860

INDEX OF DRAWINGS

DWG. NO.	SHEET NO.	REV. NO.	TITLE
V-001	1		COVER
V-002	2		VINCINITY & LOCATION MAPS
			HAZARDOUS
H-001	3		EXECUTIVE SUMMARY FROM LIMITED ASBESTOS SURVEY REPORT
H-002	4		EXECUTIVE SUMMARY FROM PAINT ANALYSIS FOR TOTAL METALS
H-003	5		EXECUTIVE SUMMARY FROM PAINT ANALYSIS FOR TOTAL METALS
H-004	6		EXECUTIVE SUMMARY FROM PAINT ANALYSIS FOR TOTAL METALS
H-005	7		EXECUTIVE SUMMARY FROM PCB TESTING – PAINT CHIP SAMPLES
H-006	8		EXECUTIVE SUMMARY FROM PCB TESTING – TRANSFORMER OIL
			CIVIL
C-001	9		GENERAL NOTES AND TESTING SCHEDULE
C-002	10		STANDARD ABBREVIATIONS AND SYMBOLS
C-100	11		SITE BREAKOUT PLAN
C-101	12		SITE PLAN – AREA C
C-102	13		DEMOLITION PLAN – AREA B
C-103	14		SITE PLAN – AREA A
C-104	15		GRADING PLAN – AREA A
C-105	16		DEMOLITION PLAN – AREA A (2)
C-106	17		STRIPING PLAN – AREA A
C-107	18		DEMOLITION PLAN – AREA D
C-401	19		PLAN & PROFILE AREA D
C-402	20		PLAN & PROFILE AREA A
C-501	21		MISCELLANEOUS DETAILS
C-502	22		MISCELLANEOUS DETAILS (2)
C-503	23		MISCELLANEOUS DETAILS (3)
C-504	24		MISCELLANEOUS DETAILS (4)
C-505	25		MISCELLANEOUS DETAILS (5)
C-506	26		MISCELLANEOUS DETAILS (6)
			STRUCTURAL
S-001	27		GENERAL NOTES AND ABBREVIATIONS
S-101	28		FOUNDATION SS 119A AND SS 119B PLAN AND SECTIONS
S-102	29		FOUNDATION SS 227A AND 227B PLAN SECTIONS, AND DETAILS
S-301	30		SECTIONS AND DETAILS
S-302	31		SECTIONS AND DETAILS
S-401	32		IACP (M7-407) NORTH WALL CONDUIT SUPPORT
			ELECTRICAL
E-001	33		GENERAL NOTES AND ABBREVIATIONS
E-002	34		SYMBOLS LEGENDS
E-003	35		EXISTING CABLE SCHEDULE
E-004	36		MODIFIED CABLE SCHEDULE
E-100	37		SITE BREAKOUT PLAN
E-101	38		SITE PLAN – AREA 1
E-102	39		SITE PLAN – AREA 2
E-103	40		SITE PLAN – AREA 3
E-104	41		SITE PLAN – AREA 4
E-105	42		SITE PLAN – AREA 5
E-106	43		SITE PLAN – AREA 6
E-107	44		SITE PLAN – AREA 7
E-108	45		SITE PLAN – AREA 8

INDEX OF DRAWINGS

DWG. NO.	SHEET NO.	REV. NO.	TITLE
E-401	46		ENLARGED SITE PLAN
E-402	47		ENLARGED SITE PLAN
E-403	48		ENLARGED SITE PLAN
E-404	49		ENLARGED SITE PLAN – PAD SOUTH O&C
E-405	50		ENLARGED SITE PLAN
E-406	51		ENLARGED SITE PLAN
E-407	52		ENLARGED SITE PLAN – LBS-80
E-411	53		ENLARGED SITE PLAN – ORSINO SUBSTATION
E-412	54		ENLARGED SITE PLAN – SUBSTATIONS SS B THRU F – DEMOLITION
E-413	55		ENLARGED SITE PLAN – SUBSTATION SS 227A & SS 227B – MODIFIED
E-414	56		PARTIAL PLAN – AUDITORIUM AND TRAINING BLDG. (M7-351) – MODIFIED
E-415	57		ENLARGED SITE PLAN – SS 119A AND SS 119B
E-421	58		PARTIAL PLAN – O&C BLDG. (M7-355) WEST EQUIPMENT ROOM – MODIFIED
E-422	59		PARTIAL PLAN – O&C BLDG. (M7-355) MECH. RM. 1410 – DEMOLITION
E-423	60		PARTIAL PLAN – O&C BLDG. (M7-355) MECH. RM. 1410 – MODIFIED
E-424	61		PARTIAL PLAN – O&C BLDG. (M7-355) EXTERIOR SOUTH – MODIFIED
E-425	62		PARTIAL PLAN – O&C BLDG. (M7-355) FIRE PUMP RM. – MODIFIED
E-431	63		PARTIAL PLAN – IACP (M7-407) WEST END – DEMOLTION
E-432	64		PARTIAL PLAN – IACP (M7-407) EAST END – DEMOLITION
E-433	65		PARTIAL PLAN – IACP (M7-407) WEST END – MODIFIED
E-434	66		PARTIAL PLAN – IACP (M7-407) EAST END – MODIFIED
E-435	67		PARTIAL EXTERIOR ELEVATION – IACP (M7-407) NORTH WALL – MODIFIED
E-436	68		PARTIAL INTERIOR ELEVATION – IACP (M7-407) SOUTH WALL – MODIFIED
E-501	69		MISCELLANEOUS DETAILS
E-502	70		DETAILS – SUBSTATIONS SS 119A AND SS 119B EQUIPMENT PAD
E-503	71		DETAILS – SUBSTATIONS SS 227A AND 227B EQUIPMENT PAD
E-511	72		MANHOLE DETAILS
E-512	73		MISCELLANEOUS DETAILS
E-513	74		VFI DETAILS
E-514	75		LBS DETAILS
E-515	76		DUCT BANK SECTIONS
E-516	77		DUCT BANK SECTIONS
E-601	78		PARTIAL ONE-LINE FEEDERS 202-203 AND 204-205 – DEMOLTION
E-602	79		PARTIAL ONE-LINE FEEDERS 202-203 AND 204-205 – MODIFIED
E-603	80		PARTIAL ONE-LINE FEEDERS 101, 102, 213 AND 215 – DEMOLITION
E-604	81		PARTIAL ONE-LINE FEEDERS 101, 102, 213 AND 215 – MODIFIED
E-611	82		PARTIAL ONE-LINE SS-B, C, D, E, EE & F – DEMOLITION
E-612	83		PARTIAL ONE-LINE SS 227A AND SS 227B – MODIFIED
E-621	84		ONE LINE DIAGRAM – SUBSTATION SS-119 – EXISTING
E-622	85		ONE LINE DIAGRAM – SUBSTATION SS-119B
E-623	86		ONE LINE DIAGRAM – SUBSTATION SS-119A
E-631	87		VFI METERING – WIRING DIAGRAM
E-632	88		SYSTEM ARCHITECTURE DIAGRAMS
E-633	89		SYSTEM ARCHITECTURE DIAGRAMS
E-634	90		SYSTEM ARCHITECTURE DIAGRAMS
E-635	91		SYSTEM ARCHITECTURE DIAGRAMS
E-641	92		SWITCHBOARD AND PANELBOARD SCHEDULES

DOCUMENT INFORMATION: (TITLE, NUMBER, REV, DATE)

REVITALIZE MEDIUM VOLTAGE ELECTRICAL DISTRIBUTION SYSTEMS, INDUSTRIAL AND PAYLOAD PROCESSING AREAS
PCN 98860
FINAL SUBMITTAL SEPTEMBER 24, 2012

SENSITIVE BUT UNCLASSIFIED (SBU)

INSTRUCTIONS: This item must be reviewed under the requirements for "Sensitive But Unclassified Information" as described in NPR 1600.1, Chapter 5.

http://nodis-dms.gsfc.nasa.gov

	Yes	No	SBU Reviewer's Signature	Date	Company / Org
Document contains SBU?	☐	☒	C P Bennardo	9/25/12	NASA/TA-B3B

EXPORT CONTROL (EC)

INSTRUCTIONS: Attach the document requiring an export determination. Contact the KSC ECO Help Desk (867-9209) for help in completing this form.

http://exportcontrol.ksc.nasa.gov/

Contractor EC Reviewer's Name and Organization	Contractor EC Reviewer's Signature	Date

NASA ECO Reviewer's Name and Organization	NASA ECO Reviewer's Signature	Date
C.P. BENNARDO TA-B3B	C P Bennardo	9/25/12

	EXPORT DETERMINATION (Check one box only)	
EAR 99	☒ **NLR**	The information contained in the document is technical in content, but is not technical data as defined by the ITAR or the EAR, and therefore is EAR 99 NLR (no export license required). [General Prohibition Six (Embargo) applies to all items subject to the EAR, i.e. items on the CCL and within EAR 99 NLR. You may not make an export or re-export contrary to the provisions of part 746 (Embargos and Other Special Controls) of the EAR and 22 CFR part 126.1 of the ITAR.]
EAR Controlled	☐	This document is within the purview of the Export Administration Regulations (EAR), 15 CFR 730-774, and is export controlled. It may not be transferred to foreign nationals in the U.S. or abroad without specific approval of a knowledgeable NASA export control official, and/or unless an export license or license exception is obtained/available from the Bureau of Industry and Security, United States Department of Commerce. Violations of these regulations are punishable by fine, imprisonment, or both.
ITAR Controlled	☐	This document contains information which falls under the purview of the U.S. Munitions List (USML), as defined in the International Traffic in Arms Regulations (ITAR), 22 CFR 120-130, and is export controlled. It shall not be transferred to foreign nationals, in the U.S. or abroad, without specific approval of a knowledgeable NASA export control official, and/or unless an export license or license exemption is obtained/available from the United States Department of State. *Violations of these regulations are punishable by fine, imprisonment, or both.*

KSC FORM 7-657V2 NS (REV. 09/11) PREVIOUS EDITIONS ARE OBSOLETE

TECHNICAL SPECIFICATION 79K39136

SYM.	ZONE	DESCRIPTION	DATE	APPROVED
		REVISIONS		

URS
7650 West Courtney Campbell Causeway
Suite 700
Tampa, Florida 33607
Ph: (813) 286-1711 Fax: (813) 286-6587
Florida Engineering Number: 000002

SIGNATURES		DATE
DRAWN	TRS	9/24/12
CHECKED	GHD	9/24/12
SUBMITTED	E. KERLY	9/24/12
APPROVED	D. WALKER	9/24/12
	S. MEHTA	9/25/12
	P. BENNARDO	9/25/12

NATIONAL AERONAUTICS AND SPACE ADMINISTRATION
JOHN F. KENNEDY SPACE CENTER, NASA
KENNEDY SPACE CENTER, FLORIDA

REVITALIZE MEDIUM VOLTAGE
ELECTRICAL DISTRIBUTION SYSTEMS,
INDUSTRIAL AND PAYLOAD PROCESSING AREAS

COVER

V-001

FILE NO.	SIZE	DWG. NO.
	F	79K39135

PCN NO. 98860 SHEET 1 OF 92

KSC FORM 1-11A (REV 8/91) (C/G 1/93)

NOTICE – WHEN GOVERNMENT DRAWINGS, SPECIFICATIONS, OR OTHER DATA ARE USED FOR ANY PURPOSE OTHER THAN IN CONNECTION WITH A DEFINITELY RELATED GOVERNMENT PROCUREMENT OPERATION, THE UNITED STATES GOVERNMENT THEREBY INCURS NO RESPONSIBILITY NOR ANY OBLIGATION WHATSOEVER; AND THE FACT THAT THE GOVERNMENT MAY HAVE FORMULATED, FURNISHED, OR IN ANY WAY SUPPLIED THE SAID DRAWINGS, SPECIFICATIONS, OR OTHER DATA IS NOT TO BE REGARDED BY IMPLICATION OR OTHERWISE AS IN ANY MANNER LICENSING THE HOLDER OR ANY OTHER PERSON OR CORPORATION, OR CONVEYING ANY RIGHTS OR PERMISSION TO MANUFACTURE, USE, OR SELL ANY PATENTED INVENTION THAT MAY IN ANY WAY BE RELATED THERETO.

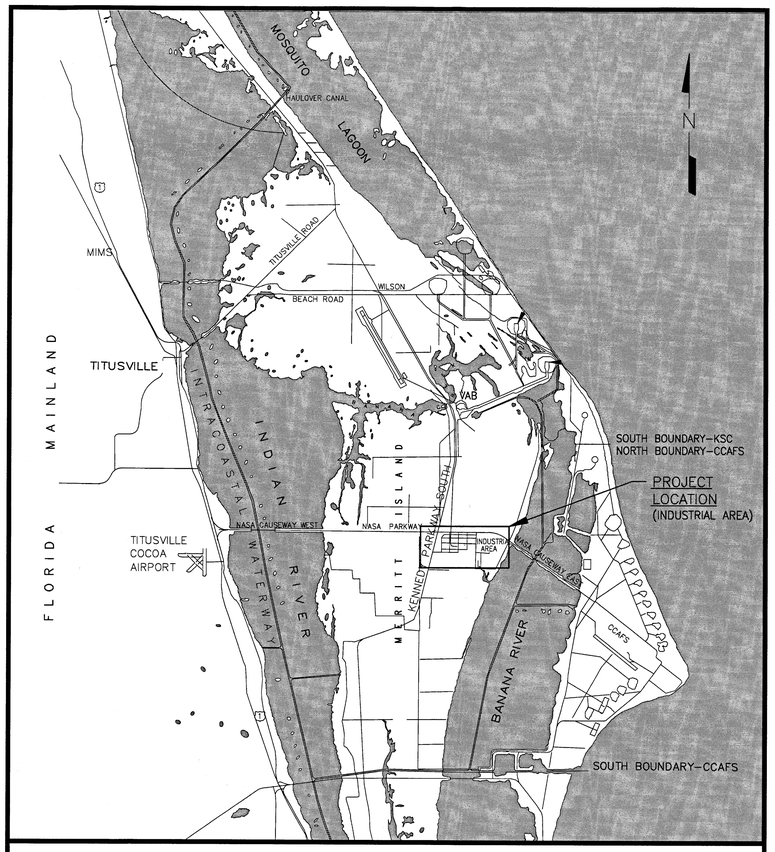

VICINITY MAP

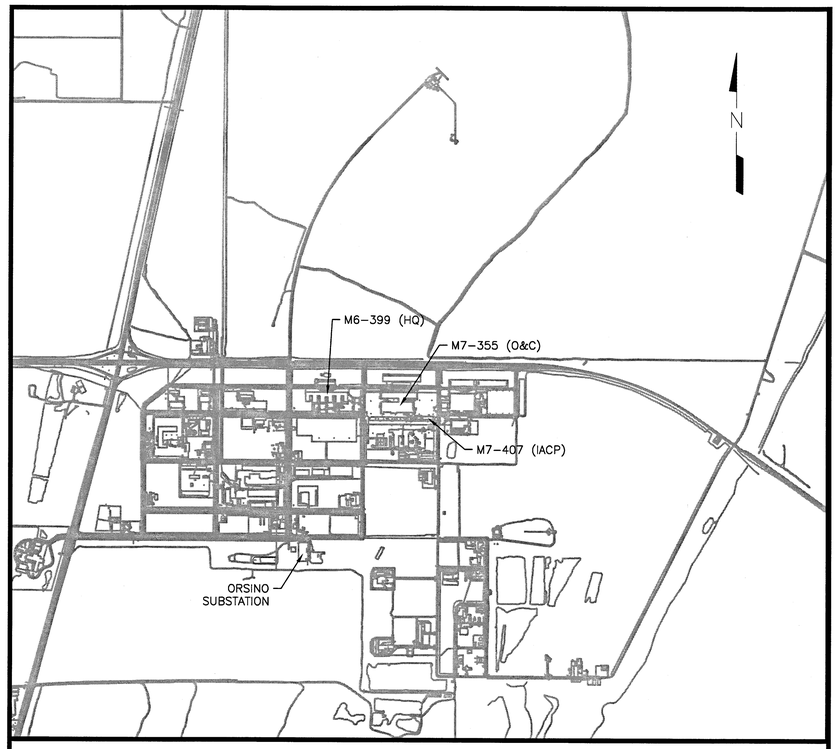

LOCATION MAP

SYM.	ZONE	DESCRIPTION	DATE	APPROVED
		REVISIONS		

URS
7650 West Courtney Campbell Causeway
Suite 700
Tampa, Florida 33607
Ph: (813) 286–1711 Fax: (813) 286–6587
Florida Engineering Number: 000002

SIGNATURES		DATE
DRAWN	TRS	9/24/12
CHECKED	GHD	9/24/12
SUBMITTED	GARRET KERLY	9/24/12
ST OF LICENSURE: FL		
LICENSE NO.: 54952		
APPROVED	F. WALKER	9/24/12
	S. MEHTA	9/25/12

NATIONAL AERONAUTICS AND SPACE ADMINISTRATION
JOHN F. KENNEDY SPACE CENTER, NASA
KENNEDY SPACE CENTER, FLORIDA

REVITALIZE MEDIUM VOLTAGE
ELECTRICAL DISTRIBUTION SYSTEMS,
INDUSTRIAL AND PAYLOAD PROCESSING AREAS

VINCINITY & LOCATION MAPS

V–002

FILE NO.	SIZE	DWG. NO.
	F	79K39135
PCN NO. 98860		SHEET 2

KSC FORM 1–11A (REV 8/91) (C/Z 12/93)

I:\NASA KSC\Vaa 65, 1\Drawings\V–001–V–003.dwg 09/25/2012 13:59

NOTICE – WHEN GOVERNMENT DRAWINGS, SPECIFICATIONS, OR OTHER DATA ARE USED FOR ANY PURPOSE OTHER THAN IN CONNECTION WITH A DEFINITELY RELATED GOVERNMENT PROCUREMENT OPERATION, THE UNITED STATES GOVERNMENT THEREBY INCURS NO RESPONSIBILITY NOR ANY OBLIGATION WHATSOEVER; AND THE FACT THAT THE GOVERNMENT MAY HAVE FORMULATED, FURNISHED, OR IN ANY WAY SUPPLIED THE SAID DRAWINGS, SPECIFICATIONS, OR OTHER DATA IS NOT TO BE REGARDED BY IMPLICATION OR OTHERWISE AS IN ANY MANNER LICENSING THE HOLDER OR ANY OTHER PERSON OR CORPORATION, OR CONVEYING ANY RIGHTS OR PERMISSION TO MANUFACTURE, USE, OR SELL ANY PATENTED INVENTION THAT MAY IN ANY WAY BE RELATED THERETO.

1.0 EXECUTIVE SUMMARY

Sample Collection Date

August 21st 2012

Inspector:

Kevin O'Malley, Asbestos Building Inspector Certification No. 154429

Licensed Asbestos Consultant

Alfredo Delregato, CIH 9459CP
FLAC # AX80

State Licenses and/or Certifications

Asbestos License No. ZA 0000205

Limited Asbestos Sampling for the following components:

JobLocation	Sample No.	Sample Indentification	Component	Description
Rev.MV.Elec.Dist.Sys	ONC-01	Rm 1635 (1435)	Duct Mastic	White, Soft
Rev.MV.Elec.Dist.Sys	ONC-02	Rm 1635 (1435)	Duct Mastic	White, Soft
Rev.MV.Elec.Dist.Sys	ONC-03	Rm 1635 (1435)	Duct Mastic	White, Soft
Rev.MV.Elec.Dist.Sys	ONC-04	Rm 1635 (1435)	TSI-Pipe	Silver, Fibrous
Rev.MV.Elec.Dist.Sys	ONC-05	Rm 1635 (1435)	TSI-Pipe	Silver, Fibrous
Rev.MV.Elec.Dist.Sys	ONC-06	Rm 1635 (1435)	TSI-Pipe	Silver, Fibrous
Rev.MV.Elec.Dist.Sys	ONC-07	Rm 1623 (1423)	TSI-Pipe CWR	Silver, Fibrous
Rev.MV.Elec.Dist.Sys	ONC-07	Rm 1623 (1423)	Soft Material	Gray, Soft
Rev.MV.Elec.Dist.Sys	ONC-08	Rm 1623 (1423)	TSI-Pipe CWR	Green/Gray, Fibrous
Rev.MV.Elec.Dist.Sys	ONC-08	Rm 1623 (1423)	Soft Material	Gray, Soft
Rev.MV.Elec.Dist.Sys	ONC-09	Rm 1623 (1423)	TSI- Elbow CWR	White/Gray, Fibrous
Rev.MV.Elec.Dist.Sys	ONC-09	Rm 1623 (1423)	Soft Material	Gray, Soft
Rev.MV.Elec.Dist.Sys	ONC-10	Rm 1623 (1423)	TSI-Tank Small	White, Powdery/Fibrous
Rev.MV.Elec.Dist.Sys	ONC-11	Rm 1623 (1423)	TSI-Tank Small	White, Powdery/Fibrous
Rev.MV.Elec.Dist.Sys	ONC-12	Rm 1623 (1423)	TSI-Tank Small	White, Powdery/Fibrous
Rev.MV.Elec.Dist.Sys	ONC-13	Rm 1623 (1423)	TSI-Pipe HWS	White/Yellow, Fibrous
Rev.MV.Elec.Dist.Sys	ONC-13	Rm 1623 (1423)	Cover	White, Fibrous
Rev.MV.Elec.Dist.Sys	ONC-14	Rm 1623 (1423)	TSI-Pipe HWR	White, Fibrous

JobLocation	Sample No.	Sample Indentification	Component	Description
Rev.MV.Elec.Dist.Sys	ONC-15	Rm 1623 (1423)	TSI-Elbow	Gray, Powdery
Rev.MV.Elec.Dist.Sys	ONC-15	Rm 1623 (1423)	Cover	White, Fibrous
Rev.MV.Elec.Dist.Sys	IACP-16	Chiller Rm M7-407	Insulation-Wall	Yellow, Fibrous
Rev.MV.Elec.Dist.Sys	IACP-16	Chiller Rm M7-407	Cover	White, Soft
Rev.MV.Elec.Dist.Sys	IACP-17	Chiller Rm M7-407	Insulation-Wall	Yellow, Fibrous
Rev.MV.Elec.Dist.Sys	IACP-17	Chiller Rm M7-407	Cover	White, Soft
Rev.MV.Elec.Dist.Sys	IACP-18	Chiller Rm M7-407	Insulation-Wall	Yellow, Fibrous
Rev.MV.Elec.Dist.Sys	IACP-18	Chiller Rm M7-407	Cover	White, Soft

TSI =Thermal System Insulation

Overview

PbO3 Environmental Testing & Service Co., Inc. was contracted by the URS Corporation to provide limited testing services for suspect asbestos containing materials as designated by our client.

There was a total of twenty-six (26) samples (including sub-samples) analyzed by EPA Method 600/M4/82/020R-93/116.

Based upon our visual observations, bulk sampling of suspect materials, and subsequent microscopic analysis, we have determined that **Asbestos Containing Material** was detected.

2.0 SUMMARY- SAMPLE RESULTS

Asbestos Containing Material was detected in the following samples:

Sample No.	Sample Identification	LayerID	Component	MacroDescription	Asbestos Material	Asbestos Qty	Friable
ONC-08	Rm 1623 (1423)	2	TSI-Pipe CWR	Gray, Soft	CHRYSOTILE	**2%**	Yes*
ONC-09	Rm 1623 (1423)	2	TSI- Elbow CWR	Gray, Soft	CHRYSOTILE	**2%**	Yes*
ONC-15	Rm 1623 (1423)	1	TSI-Elbow	Gray, Powdery	CHRYSOTILE	**6%**	Yes*
ONC-10	Rm 1623 (1423)	triplicate samples	TSI-Tank Small	White, Powdery/Fibrous	CHRYSOTILE	**35%**	Yes*
ONC-12	Rm 1623 (1423)	triplicate samples	TSI-Tank Small	White, Powdery/Fibrous	CHRYSOTILE	**35%**	Yes*
ONC-11	Rm 1623 (1423)	triplicate samples	TSI-Tank Small	White, Powdery/Fibrous	CHRYSOTILE	**40%**	Yes*

Note: 3/4 inch insulated hot water lines to elevated heaters in room 1611 (1411) were not sampled. The insulated hot water lines are assumed to be a friable form of asbestos containing material.

*Friable asbestos-containing material (ACM), is defined by the EPA-"National Emission Standards for Hazardous Air Pollutants" (NESHAP) regulation as any material containing more than one percent (1%) asbestos when dry, can be crumbled, pulverized or reduced to powder by hand pressure.

Asbestos Containing Material was **NOT** detected in the following samples

JobLocation	Sample No.	Sample Identification	LayerID	Component	MacroDescription	Asbestos Material
Rev.MV.Elec.Dist.Sys	ONC-01	Rm 1635 (1435)	1	Duct Mastic	White, Soft	None Detected
Rev.MV.Elec.Dist.Sys	ONC-02	Rm 1635 (1435)	1	Duct Mastic	White, Soft	None Detected
Rev.MV.Elec.Dist.Sys	ONC-03	Rm 1635 (1435)	1	Duct Mastic	White, Soft	None Detected
Rev.MV.Elec.Dist.Sys	ONC-04	Rm 1635 (1435)	1	TSI-Pipe	Silver, Fibrous	None Detected
Rev.MV.Elec.Dist.Sys	ONC-05	Rm 1635 (1435)	1	TSI-Pipe	Silver, Fibrous	None Detected
Rev.MV.Elec.Dist.Sys	ONC-06	Rm 1635 (1435)	1	TSI-Pipe	Silver, Fibrous	None Detected
Rev.MV.Elec.Dist.Sys	ONC-07	Rm 1623 (1423)	1	TSI-Pipe CWR	Silver, Fibrous	None Detected
Rev.MV.Elec.Dist.Sys	ONC-07	Rm 1623 (1423)	2	Soft Material	Gray, Soft	None Detected
Rev.MV.Elec.Dist.Sys	ONC-08	Rm 1623 (1423)	1	TSI-Pipe CWR	Green/Gray, Fibrous	None Detected
Rev.MV.Elec.Dist.Sys	ONC-09	Rm 1623 (1423)	1	TSI- Elbow CWR	White/Gray, Fibrous	None Detected
Rev.MV.Elec.Dist.Sys	ONC-13	Rm 1623 (1423)	1	TSI-Pipe HWS	White/Yellow, Fibrous	None Detected
Rev.MV.Elec.Dist.Sys	ONC-13	Rm 1623 (1423)	2	Cover	White, Fibrous	None Detected
Rev.MV.Elec.Dist.Sys	ONC-14	Rm 1623 (1423)	1	TSI-Pipe HWR	White, Fibrous	None Detected
Rev.MV.Elec.Dist.Sys	ONC-15	Rm 1623 (1423)	2	Cover	White, Fibrous	None Detected
Rev.MV.Elec.Dist.Sys	IACP-16	M7-407 Chiller Rm	1	Insulation-Wall	Yellow, Fibrous	None Detected
Rev.MV.Elec.Dist.Sys	IACP-16	M7-407 Chiller Rm	2	Cover	White, Soft	None Detected
Rev.MV.Elec.Dist.Sys	IACP-17	M7-407 Chiller Rm	1	Insulation-Wall	Yellow, Fibrous	None Detected
Rev.MV.Elec.Dist.Sys	IACP-17	M7-407 Chiller Rm	2	Cover	White, Soft	None Detected
Rev.MV.Elec.Dist.Sys	IACP-18	M7-407 Chiller Rm	1	Insulation-Wall	Yellow, Fibrous	None Detected
Rev.MV.Elec.Dist.Sys	IACP-18	M7-407 Chiller Rm	2	Cover	White, Soft	None Detected

SPECIFIC NOTES:

A. THESE PAGES COVER THE EXECUTIVE SUMMARY FROM THE LIMITED ASBESTOS SURVEY REPORT, WHICH IS INCLUDED IN ITS ENTIRETY AS AN APPENDIX TO THE SPECIFICATIONS.

B. THE LIMITED ASBESTOS SURVEY INCLUDED THE TESTING OF VARIOUS SUSPECT ITEMS WITHIN THE O&C BLDG M7-355, ROOM NOS. 1635 (1435) AND 1623 (1423). THIS PROJECT INCLUDES WORK ELEMENTS WITHIN THESE ROOMS. THE CONTRACTOR SHALL ENDEAVOR TO COMPLETE THESE WORK ELEMENTS WITHOUT DISTURBING ASBESTOS CONTAINING MATERIALS. WHERE DISTURBING ASBESTOS CONTAINING MATERIALS PROVES UNAVOIDABLE, THE CONTRACTOR SHALL ABATE SUCH MATERIALS TO THE EXTENT REQUIRED FOR THE COMPLETION OF THE WORK OF THIS PROJECT, IN ACCORDANCE WITH THE REQUIREMENTS OF SPECIFICATION SECTION 02 82 13.00 98 ASBESTOS ABATEMENT.

SYM.	ZONE	DESCRIPTION	DATE	APPROVED
		REVISIONS		

URS
7650 West Courtney Campbell Causeway
Suite 700
Tampa, Florida 33607
Ph: (813) 286-1711 Fax: (813) 286-6587
Florida Engineering Number: 000002

SIGNATURES		DATE
DRAWN	TRS	9/24/12
CHECKED	GHD	9/24/12
SUBMITTED	GARRET KERLY	9/24/12
ST OF LICENSURE: FL		
LICENSE NO.: 54952		
APPROVED	F. WALKER	9/24/12
	S. MEHTA	9/25/12

NATIONAL AERONAUTICS AND SPACE ADMINISTRATION
JOHN F. KENNEDY SPACE CENTER, NASA
KENNEDY SPACE CENTER, FLORIDA

REVITALIZE MEDIUM VOLTAGE
ELECTRICAL DISTRIBUTION SYSTEMS,
INDUSTRIAL AND PAYLOAD PROCESSING AREAS
EXECUTIVE SUMMARY FROM
LIMITED ASBESTOS SURVEY
REPORT

H-001

FILE NO.	SIZE	DWG. NO.
	F	79K39135
PCN NO. 98860		SHEET 3

KSC FORM 1-11A (REV 8/91) (C/G 12/93)
T:\NASA KSC\Task No. 1\Drawings\H-001 ENVIRONMENTAL TESTING REPORTS.dwg 09/20/2012 13:59

NOTICE – WHEN GOVERNMENT DRAWINGS, SPECIFICATIONS, OR OTHER DATA ARE USED FOR ANY PURPOSE OTHER THAN IN CONNECTION WITH A DEFINITELY RELATED GOVERNMENT PROCUREMENT OPERATION, THE UNITED STATES GOVERNMENT THEREBY INCURS NO RESPONSIBILITY NOR ANY OBLIGATION WHATSOEVER; AND THE FACT THAT THE GOVERNMENT MAY HAVE FORMULATED, FURNISHED, OR IN ANY WAY SUPPLIED THE SAID DRAWINGS, SPECIFICATIONS OR OTHER DATA IS NOT TO BE REGARDED BY IMPLICATION OR OTHERWISE AS IN ANY MANNER LICENSING THE HOLDER OR ANY OTHER PERSON OR CORPORATION, OR CONVEYING ANY RIGHTS OR PERMISSION TO MANUFACTURE, USE, OR SELL ANY PATENTED INVENTION THAT MAY IN ANY WAY BE RELATED THERETO.

1.0 EXECUTIVE SUMMARY

Sample Collection Dates

August 21st, 24th & 28th 2012

State Licenses and/or Certifications

U.S. EPA Certified Lead-Based Paint Activities Firm No. FL-2418-2
Asbestos License # ZA 0000205

Inspector:

Kevin O'Malley, Florida EPA Certified Lead-Based Paint Risk Assessor FL-R-345-3
Asbestos Building Inspector Certification No. 154429

Paint Chip Samples were collected from the following component(s):

Job Location	Sample No.	Sample Description
Rev MV Elec Dist Sys	P-08	SS-B Primary Sec
Rev MV Elec Dist Sys	P-09	SS-B Transformer
Rev MV Elec Dist Sys	P-11	SS-C Primary Sec
Rev MV Elec Dist Sys	P-10	SS-B Secondary
Rev MV Elec Dist Sys	P-06	SS-EE Transformer
Rev MV Elec Dist Sys	P-05	SS-EE Primary Sec
Rev MV Elec Dist Sys	P-13	SS-C Secondary
Rev MV Elec Dist Sys	P-22	SS-F Secondary
Rev MV Elec Dist Sys	P-14	SS-D Primary Sec
Rev MV Elec Dist Sys	P-12	SS-C Transformer
Rev MV Elec Dist Sys	P-07	SS-EE Secondary Switch
Rev MV Elec Dist Sys	P-19	SS-E Secondary
Rev MV Elec Dist Sys	P-17	SS-E Primary Sec
Rev MV Elec Dist Sys	P-20	SS-F Primary

Paint Analysis for Total Metals- Eight (8) Metals
Project No.: **PCN 98860**
Revitalize Medium Voltage Electrical Distribution Systems, Industrial and Payload Processing Areas
Kennedy Space Center, FL

Job Location	Sample No.	Sample Description
Rev MV Elec Dist Sys	P-01	LBS-14
Rev MV Elec Dist Sys	P-02	LBS-57
Rev MV Elec Dist Sys	P-03	LBS-58
Rev MV Elec Dist Sys	P-04	LBS-80
Rev MV Elec Dist Sys	P-15	SS-D Transformer
Rev MV Elec Dist Sys	P-16	SS-D Secondary
Rev MV Elec Dist Sys	P-18	SS-E Transformer
Rev MV Elec Dist Sys	P-21	SS-F Transformer
Rev MV Elec Dist Sys	P-23	SS-119A Primary Sec
Rev MV Elec Dist Sys	P-24	SS-119A Transformer
Rev MV Elec Dist Sys	P-25	SS-119A Secondary
Rev MV Elec Dist Sys	P-26	SS-119B Primary Sec
Rev MV Elec Dist Sys	P-27	SS-119B Transformer
Rev MV Elec Dist Sys	P-28	SS-119B DC Power Supply

Overview

According to your instructions ***PbO₃*** Environmental Testing & Service Co., Inc. has collected twenty-eight (28) representative paint chip samples of exposed painted components as designated by our client.

The samples were analyzed for Total Metals by EPA Method 6010C for Barium, Cadmium, Chromium, Lead, Silver Arsenic, Selenium and EPA Method 7471B for Mercury.

Paint Analysis for Total Metals- Eight (8) Metals
Project No.: **PCN 98860**
Revitalize Medium Voltage Electrical Distribution Systems, Industrial and Payload Processing Areas
Kennedy Space Center, FL

2.0 DETAILED FINDINGS

Job Location	Sample No.	Sample Description	PeriodicName	PPM	Dimensions -Inches
Rev MV Elec Dist Sys	P-01	LBS-14	Silver	6	70x23x75
Rev MV Elec Dist Sys	P-01	LBS-14	Arsenic	< 6	
Rev MV Elec Dist Sys	P-01	LBS-14	Barium	32,515	
Rev MV Elec Dist Sys	P-01	LBS-14	Cadmium	< 6	
Rev MV Elec Dist Sys	P-01	LBS-14	Chromium	22	
Rev MV Elec Dist Sys	P-01	LBS-14	Mercury	< 1	
Rev MV Elec Dist Sys	P-01	LBS-14	Lead	14	
Rev MV Elec Dist Sys	P-01	LBS-14	Selenium	< 6	
Rev MV Elec Dist Sys	P-02	LBS-57	Silver	< 6	80x23x73
Rev MV Elec Dist Sys	P-02	LBS-57	Arsenic	< 6	
Rev MV Elec Dist Sys	P-02	LBS-57	Barium	6,769	
Rev MV Elec Dist Sys	P-02	LBS-57	Cadmium	21	
Rev MV Elec Dist Sys	P-02	LBS-57	Chromium	< 14	
Rev MV Elec Dist Sys	P-02	LBS-57	Mercury	< 1	
Rev MV Elec Dist Sys	P-02	LBS-57	Lead	151	
Rev MV Elec Dist Sys	P-02	LBS-57	Selenium	< 6	
Rev MV Elec Dist Sys	P-03	LBS-58	Silver	< 6	80x23x73
Rev MV Elec Dist Sys	P-03	LBS-58	Arsenic	< 6	
Rev MV Elec Dist Sys	P-03	LBS-58	Barium	18,846	
Rev MV Elec Dist Sys	P-03	LBS-58	Cadmium	10	
Rev MV Elec Dist Sys	P-03	LBS-58	Chromium	< 16	
Rev MV Elec Dist Sys	P-03	LBS-58	Mercury	< 1	
Rev MV Elec Dist Sys	P-03	LBS-58	Lead	84	
Rev MV Elec Dist Sys	P-03	LBS-58	Selenium	< 6	
Rev MV Elec Dist	P04	LBS-80	Silver	4	94x24x88
Rev MV Elec Dist	P04	LBS-80	Arsenic	< 4	
Rev MV Elec Dist	P04	LBS-80	Barium	< 4	
Rev MV Elec Dist	P04	LBS-80	Cadmium	< 4	
Rev MV Elec Dist	P04	LBS-80	Chromium	21	
Rev MV Elec Dist	P04	LBS-80	Mercury	< 1	
Rev MV Elec Dist	P04	LBS-80	Lead	29	
Rev MV Elec Dist	P04	LBS-80	Selenium	< 4	
Rev MV Elec Dist Sys	P-05	SS-EE Primary Sec	Silver	< 7	114x88x90
Rev MV Elec Dist Sys	P-05	SS-EE Primary Sec	Arsenic	< 7	
Rev MV Elec Dist Sys	P-05	SS-EE Primary Sec	Barium	2,797	
Rev MV Elec Dist Sys	P-05	SS-EE Primary Sec	Cadmium	< 7	

SPECIFIC NOTES:

A. THESE PAGES COVER THE EXECUTIVE SUMMARY FROM THE PAINT ANALYSIS FOR TOTAL METALS EIGHT (8) METALS REPORT, WHICH IS INCLUDED IN ITS ENTIRETY AS AN APPENDIX TO THE SPECIFICATIONS.

B. THE PAINT SAMPLES TESTED WERE TAKEN FROM EQUIPMENT SPECIFIED TO BE DEMOLISHED OR MODIFIED AS PART OF THE WORK OF THIS PROJECT AND ARE IDENTIFIED BY EQUIPMENT DESIGNATION UNDER SAMPLE COLUMN OF THE REPORT.

SYM.	ZONE	DESCRIPTION	DATE	APPROVED
		REVISIONS		

URS
7650 West Courtney Campbell Causeway
Suite 700
Tampa, Florida 33607
Ph: (813) 286-1711 Fax: (813) 286-6587
Florida Engineering Number: 000002

SIGNATURES		DATE
DRAWN	TRS	9/24/12
CHECKED	GHD	9/24/12
SUBMITTED	GARRET KERLY	9/24/12
ST OF LICENSURE:	FL	
LICENSE NO.:	54952	
APPROVED	F. WALKER	9/24/12
	S. MEHTA	9/25/12

NATIONAL AERONAUTICS AND SPACE ADMINISTRATION
JOHN F. KENNEDY SPACE CENTER, NASA
KENNEDY SPACE CENTER, FLORIDA

REVITALIZE MEDIUM VOLTAGE ELECTRICAL DISTRIBUTION SYSTEMS, INDUSTRIAL AND PAYLOAD PROCESSING AREAS
EXECUTIVE SUMMARY FROM PAINT ANALYSIS FOR TOTAL METALS

FILE NO. | SIZE F | DWG. NO. 79K39135
PCN NO. 98860 | SHEET 4

H-002

T:\NASA KSC\Task No. 1\Drawings\H-002 ENVIRONMENTAL TESTING REPORTS.dwg 09/26/2012 13:59
KSC FORM 1-11A (REV 8/91) (C/G 12/93)

NOTICE – WHEN GOVERNMENT DRAWINGS, SPECIFICATIONS, OR OTHER DATA ARE USED FOR ANY PURPOSE OTHER THAN IN CONNECTION WITH A DEFINITELY RELATED GOVERNMENT PROCUREMENT OPERATION, THE UNITED STATES GOVERNMENT THEREBY INCURS NO RESPONSIBILITY NOR OBLIGATION WHATSOEVER; AND THE FACT THAT THE GOVERNMENT MAY HAVE FORMULATED, FURNISHED, OR IN ANY WAY SUPPLIED THE SAID DRAWINGS, SPECIFICATIONS, OR OTHER DATA IS NOT TO BE REGARDED BY IMPLICATION OR OTHERWISE AS IN ANY MANNER LICENSING THE HOLDER OR ANY OTHER PERSON OR CORPORATION, OR CONVEYING ANY RIGHTS OR PERMISSION TO MANUFACTURE, USE, OR SELL ANY PATENTED INVENTION THAT MAY IN ANY WAY BE RELATED THERETO.

Paint Analysis for Total Metals- Eight (8) Metals
Project No.: **PCN 98860**
Revitalize Medium Voltage Electrical Distribution Systems, Industrial and Payload Processing Areas
Kennedy Space Center, FL

Job Location	Sample No.	Sample Description	PeriodicName	PPM	Dimensions -Inches
Rev MV Elec Dist Sys	P-05	SS-EE Primary Sec	Chromium	37	
Rev MV Elec Dist Sys	P-05	SS-EE Primary Sec	Mercury	2	
Rev MV Elec Dist Sys	P-05	SS-EE Primary Sec	Lead	8,532	
Rev MV Elec Dist Sys	P-05	SS-EE Primary Sec	Selenium	< 7	
Rev MV Elec Dist Sys	P-06	SS-EE Transformer	Silver	< 6	54x53x58
Rev MV Elec Dist Sys	P-06	SS-EE Transformer	Arsenic	< 6	
Rev MV Elec Dist Sys	P-06	SS-EE Transformer	Barium	667	
Rev MV Elec Dist Sys	P-06	SS-EE Transformer	Cadmium	< 6	
Rev MV Elec Dist Sys	P-06	SS-EE Transformer	Chromium	846	
Rev MV Elec Dist Sys	P-06	SS-EE Transformer	Mercury	2	
Rev MV Elec Dist Sys	P-06	SS-EE Transformer	Lead	5,106	
Rev MV Elec Dist Sys	P-06	SS-EE Transformer	Selenium	< 6	
Rev MV Elec Dist Sys	P-07	SS-EE Secondary Switch	Silver	< 6	80x60x90
Rev MV Elec Dist Sys	P-07	SS-EE Secondary Switch	Arsenic	< 6	
Rev MV Elec Dist Sys	P-07	SS-EE Secondary Switch	Barium	278	
Rev MV Elec Dist Sys	P-07	SS-EE Secondary Switch	Cadmium	16	
Rev MV Elec Dist Sys	P-07	SS-EE Secondary Switch	Chromium	134	
Rev MV Elec Dist Sys	P-07	SS-EE Secondary Switch	Mercury	1	
Rev MV Elec Dist Sys	P-07	SS-EE Secondary Switch	Lead	2,200	
Rev MV Elec Dist Sys	P-07	SS-EE Secondary Switch	Selenium	< 6	
Rev MV Elec Dist Sys	P-08	SS-B Primary Sec	Silver	< 6	80x108x104
Rev MV Elec Dist Sys	P-08	SS-B Primary Sec	Arsenic	< 6	
Rev MV Elec Dist Sys	P-08	SS-B Primary Sec	Barium	51	
Rev MV Elec Dist Sys	P-08	SS-B Primary Sec	Cadmium	< 6	
Rev MV Elec Dist Sys	P-08	SS-B Primary Sec	Chromium	< 15	
Rev MV Elec Dist Sys	P-08	SS-B Primary Sec	Mercury	< 1	
Rev MV Elec Dist Sys	P-08	SS-B Primary Sec	Lead	114	
Rev MV Elec Dist Sys	P-08	SS-B Primary Sec	Selenium	< 6	
Rev MV Elec Dist Sys	P-09	SS-B Transformer	Silver	< 6	75x60x90
Rev MV Elec Dist Sys	P-09	SS-B Transformer	Arsenic	182	
Rev MV Elec Dist Sys	P-09	SS-B Transformer	Barium	6,888	
Rev MV Elec Dist Sys	P-09	SS-B Transformer	Cadmium	253	
Rev MV Elec Dist Sys	P-09	SS-B Transformer	Chromium	883	
Rev MV Elec Dist Sys	P-09	SS-B Transformer	Mercury	< 1	
Rev MV Elec Dist Sys	P-09	SS-B Transformer	Lead	68,277	
Rev MV Elec Dist Sys	P-09	SS-B Transformer	Selenium	< 6	

6

Paint Analysis for Total Metals- Eight (8) Metals
Project No.: **PCN 98860**
Revitalize Medium Voltage Electrical Distribution Systems, Industrial and Payload Processing Areas
Kennedy Space Center, FL

Job Location	Sample No.	Sample Description	PeriodicName	PPM	Dimensions -Inches
Rev MV Elec Dist Sys	P-10	SS-B Secondary	Silver	< 6	77x63x108
Rev MV Elec Dist Sys	P-10	SS-B Secondary	Arsenic	13	
Rev MV Elec Dist Sys	P-10	SS-B Secondary	Barium	457	
Rev MV Elec Dist Sys	P-10	SS-B Secondary	Cadmium	< 6	
Rev MV Elec Dist Sys	P-10	SS-B Secondary	Chromium	308	
Rev MV Elec Dist Sys	P-10	SS-B Secondary	Mercury	< 1	
Rev MV Elec Dist Sys	P-10	SS-B Secondary	Lead	4,281	
Rev MV Elec Dist Sys	P-10	SS-B Secondary	Selenium	< 6	
Rev MV Elec Dist Sys	P-11	SS-C Primary Sec	Silver	8	81x108x104
Rev MV Elec Dist Sys	P-11	SS-C Primary Sec	Arsenic	182	
Rev MV Elec Dist Sys	P-11	SS-C Primary Sec	Barium	3,790	
Rev MV Elec Dist Sys	P-11	SS-C Primary Sec	Cadmium	171	
Rev MV Elec Dist Sys	P-11	SS-C Primary Sec	Chromium	83	
Rev MV Elec Dist Sys	P-11	SS-C Primary Sec	Mercury	< 1	
Rev MV Elec Dist Sys	P-11	SS-C Primary Sec	Lead	65,129	
Rev MV Elec Dist Sys	P-11	SS-C Primary Sec	Selenium	< 6	
Rev MV Elec Dist Sys	P-12	SS-C Transformer	Silver	< 7	75x60x90
Rev MV Elec Dist Sys	P-12	SS-C Transformer	Arsenic	< 7	
Rev MV Elec Dist Sys	P-12	SS-C Transformer	Barium	36	
Rev MV Elec Dist Sys	P-12	SS-C Transformer	Cadmium	< 7	
Rev MV Elec Dist Sys	P-12	SS-C Transformer	Chromium	60	
Rev MV Elec Dist Sys	P-12	SS-C Transformer	Mercury	< 1	
Rev MV Elec Dist Sys	P-12	SS-C Transformer	Lead	3,613	
Rev MV Elec Dist Sys	P-12	SS-C Transformer	Selenium	< 7	
Rev MV Elec Dist Sys	P-13	SS-C Secondary	Silver	10	77x63x108
Rev MV Elec Dist Sys	P-13	SS-C Secondary	Arsenic	295	
Rev MV Elec Dist Sys	P-13	SS-C Secondary	Barium	7,027	
Rev MV Elec Dist Sys	P-13	SS-C Secondary	Cadmium	224	
Rev MV Elec Dist Sys	P-13	SS-C Secondary	Chromium	581	
Rev MV Elec Dist Sys	P-13	SS-C Secondary	Mercury	< 1	
Rev MV Elec Dist Sys	P-13	SS-C Secondary	Lead	111,619	
Rev MV Elec Dist Sys	P-13	SS-C Secondary	Selenium	< 6	
Rev MV Elec Dist Sys	P-14	SS-D Primary Sec	Silver	< 6	80x108x104
Rev MV Elec Dist Sys	P-14	SS-D Primary Sec	Arsenic	< 6	
Rev MV Elec Dist Sys	P-14	SS-D Primary Sec	Barium	28	
Rev MV Elec Dist Sys	P-14	SS-D Primary Sec	Cadmium	< 6	
Rev MV Elec Dist Sys	P-14	SS-D Primary Sec	Chromium	781	

7

Paint Analysis for Total Metals- Eight (8) Metals
Project No.: **PCN 98860**
Revitalize Medium Voltage Electrical Distribution Systems, Industrial and Payload Processing Areas
Kennedy Space Center, FL

Job Location	Sample No.	Sample Description	PeriodicName	PPM	Dimensions -Inches
Rev MV Elec Dist Sys	P-14	SS-D Primary Sec	Mercury	< 1	
Rev MV Elec Dist Sys	P-14	SS-D Primary Sec	Lead	14,147	
Rev MV Elec Dist Sys	P-14	SS-D Primary Sec	Selenium	< 6	
Rev MV Elec Dist Sys	P-15	SS-D Transformer	Silver	< 6	76x61x90
Rev MV Elec Dist Sys	P-15	SS-D Transformer	Arsenic	< 6	
Rev MV Elec Dist Sys	P-15	SS-D Transformer	Barium	35	
Rev MV Elec Dist Sys	P-15	SS-D Transformer	Cadmium	< 6	
Rev MV Elec Dist Sys	P-15	SS-D Transformer	Chromium	483	
Rev MV Elec Dist Sys	P-15	SS-D Transformer	Mercury	< 1	
Rev MV Elec Dist Sys	P-15	SS-D Transformer	Lead	24	
Rev MV Elec Dist Sys	P-15	SS-D Transformer	Selenium	< 6	
Rev MV Elec Dist Sys	P-16	SS-D Secondary	Silver	< 6	77x63x108
Rev MV Elec Dist Sys	P-16	SS-D Secondary	Arsenic	< 6	
Rev MV Elec Dist Sys	P-16	SS-D Secondary	Barium	9	
Rev MV Elec Dist Sys	P-16	SS-D Secondary	Cadmium	< 6	
Rev MV Elec Dist Sys	P-16	SS-D Secondary	Chromium	737	
Rev MV Elec Dist Sys	P-16	SS-D Secondary	Mercury	< 1	
Rev MV Elec Dist Sys	P-16	SS-D Secondary	Lead	12,616	
Rev MV Elec Dist Sys	P-16	SS-D Secondary	Selenium	< 6	
Rev MV Elec Dist Sys	P-17	SS-E Primary Sec	Silver	< 6	81x108x104
Rev MV Elec Dist Sys	P-17	SS-E Primary Sec	Arsenic	< 6	
Rev MV Elec Dist Sys	P-17	SS-E Primary Sec	Barium	40,214	
Rev MV Elec Dist Sys	P-17	SS-E Primary Sec	Cadmium	< 6	
Rev MV Elec Dist Sys	P-17	SS-E Primary Sec	Chromium	714	
Rev MV Elec Dist Sys	P-17	SS-E Primary Sec	Mercury	< 1	
Rev MV Elec Dist Sys	P-17	SS-E Primary Sec	Lead	15,158	
Rev MV Elec Dist Sys	P-17	SS-E Primary Sec	Selenium	< 6	
Rev MV Elec Dist Sys	P-18	SS-E Transformer	Silver	< 6	76x60x90
Rev MV Elec Dist Sys	P-18	SS-E Transformer	Arsenic	< 6	
Rev MV Elec Dist Sys	P-18	SS-E Transformer	Barium	42,711	
Rev MV Elec Dist Sys	P-18	SS-E Transformer	Cadmium	< 6	
Rev MV Elec Dist Sys	P-18	SS-E Transformer	Chromium	438	
Rev MV Elec Dist Sys	P-18	SS-E Transformer	Mercury	< 1	
Rev MV Elec Dist Sys	P-18	SS-E Transformer	Lead	7	
Rev MV Elec Dist Sys	P-18	SS-E Transformer	Selenium	< 6	
Rev MV Elec Dist Sys	P-19	SS-E Secondary	Silver	< 5	77x63x108

8

SPECIFIC NOTES:

A. THESE PAGES COVER THE EXECUTIVE SUMMARY FROM THE PAINT ANALYSIS FOR TOTAL METALS EIGHT (8) METALS REPORT, WHICH IS INCLUDED IN ITS ENTIRETY AS AN APPENDIX TO THE SPECIFICATIONS.

B. THE PAINT SAMPLES TESTED WERE TAKEN FROM EQUIPMENT SPECIFIED TO BE DEMOLISHED OR MODIFIED AS PART OF THIS PROJECT AND ARE IDENTIFIED BY EQUIPMENT DESIGNATION UNDER SAMPLE COLUMN OF THE REPORT.

SYM.	ZONE	DESCRIPTION	DATE	APPROVED
		REVISIONS		

URS
7650 West Courtney Campbell Causeway
Suite 700
Tampa, Florida 33607
Ph: (813) 286-1711 Fax: (813) 286-6587
Florida Engineering Number: 000002

SIGNATURES		DATE
DRAWN	TRS	9/24/12
CHECKED	GHD	9/24/12
SUBMITTED	GARRET KERLY	9/24/12
ST OF LICENSURE: FL		
LICENSE NO.: 54952		
APPROVED	F. WALKER	9/24/12
	S. MEHTA	9/25/12

NATIONAL AERONAUTICS AND SPACE ADMINISTRATION
JOHN F. KENNEDY SPACE CENTER, NASA
KENNEDY SPACE CENTER, FLORIDA

REVITALIZE MEDIUM VOLTAGE ELECTRICAL DISTRIBUTION SYSTEMS, INDUSTRIAL AND PAYLOAD PROCESSING AREAS
EXECUTIVE SUMMARY FROM PAINT ANALYSIS FOR TOTAL METALS

H-003

FILE NO.	SIZE	DWG. NO.
	F	79K39135
PCN NO. 98860		SHEET 5

KSC FORM 1-11A (REV 8/91) (C/G 12/93)

NOTICE – WHEN GOVERNMENT DRAWINGS, SPECIFICATIONS, OR OTHER DATA ARE USED FOR ANY PURPOSE OTHER THAN IN CONNECTION WITH A DEFINITELY RELATED GOVERNMENT PROCUREMENT OPERATION, THE UNITED STATES GOVERNMENT THEREBY INCURS NO RESPONSIBILITY NOR ANY OBLIGATION WHATSOEVER; AND THE FACT THAT THE GOVERNMENT MAY HAVE FORMULATED, FURNISHED, OR IN ANY WAY SUPPLIED THE SAID DRAWINGS, SPECIFICATIONS, OR OTHER DATA, IS NOT TO BE REGARDED BY IMPLICATION OR OTHERWISE AS IN ANY MANNER LICENSING THE HOLDER OR ANY OTHER PERSON OR CORPORATION, OR CONVEYING ANY RIGHTS OR PERMISSION TO MANUFACTURE, USE, OR SELL ANY PATENTED INVENTION THAT MAY IN ANY WAY BE RELATED THERETO.

Paint Analysis for Total Metals- Eight (8) Metals
Project No.: **PCN 98860**
Revitalize Medium Voltage Electrical Distribution Systems, Industrial and Payload Processing Areas
Kennedy Space Center, FL

Job Location	Sample No.	Sample Description	PeriodicName	PPM	Dimensions -Inches
Rev MV Elec Dist Sys	P-19	SS-E Secondary	Arsenic	< 5	
Rev MV Elec Dist Sys	P-19	SS-E Secondary	Barium	39,509	
Rev MV Elec Dist Sys	P-19	SS-E Secondary	Cadmium	< 5	
Rev MV Elec Dist Sys	P-19	SS-E Secondary	Chromium	1,262	
Rev MV Elec Dist Sys	P-19	SS-E Secondary	Mercury	< 1	
Rev MV Elec Dist Sys	P-19	SS-E Secondary	Lead	20,889	
Rev MV Elec Dist Sys	P-19	SS-E Secondary	Selenium	< 5	
Rev MV Elec Dist Sys	P-20	SS-F Primary	Silver	< 6	81x108x104
Rev MV Elec Dist Sys	P-20	SS-F Primary	Arsenic	< 6	
Rev MV Elec Dist Sys	P-20	SS-F Primary	Barium	34,178	
Rev MV Elec Dist Sys	P-20	SS-F Primary	Cadmium	< 6	
Rev MV Elec Dist Sys	P-20	SS-F Primary	Chromium	3,472	
Rev MV Elec Dist Sys	P-20	SS-F Primary	Mercury	< 1	
Rev MV Elec Dist Sys	P-20	SS-F Primary	Lead	59,830	
Rev MV Elec Dist Sys	P-20	SS-F Primary	Selenium	< 6	
Rev MV Elec Dist Sys	P-21	SS-F Transformer	Silver	< 6	76x60x90
Rev MV Elec Dist Sys	P-21	SS-F Transformer	Arsenic	< 6	
Rev MV Elec Dist Sys	P-21	SS-F Transformer	Barium	30,908	
Rev MV Elec Dist Sys	P-21	SS-F Transformer	Cadmium	< 6	
Rev MV Elec Dist Sys	P-21	SS-F Transformer	Chromium	450	
Rev MV Elec Dist Sys	P-21	SS-F Transformer	Mercury	< 1	
Rev MV Elec Dist Sys	P-21	SS-F Transformer	Lead	109	
Rev MV Elec Dist Sys	P-21	SS-F Transformer	Selenium	< 6	
Rev MV Elec Dist Sys	P-22	SS-F Secondary	Silver	< 6	77x63x108
Rev MV Elec Dist Sys	P-22	SS-F Secondary	Arsenic	< 6	
Rev MV Elec Dist Sys	P-22	SS-F Secondary	Barium	40,814	
Rev MV Elec Dist Sys	P-22	SS-F Secondary	Cadmium	< 6	
Rev MV Elec Dist Sys	P-22	SS-F Secondary	Chromium	1,660	
Rev MV Elec Dist Sys	P-22	SS-F Secondary	Mercury	< 1	
Rev MV Elec Dist Sys	P-22	SS-F Secondary	Lead	28,705	
Rev MV Elec Dist Sys	P-22	SS-F Secondary	Selenium	< 6	
Rev MV Elec Dist Sys	P-23	SS-119A Primary Sec	Silver	< 6	102x36x113
Rev MV Elec Dist Sys	P-23	SS-119A Primary Sec	Arsenic	< 6	
Rev MV Elec Dist Sys	P-23	SS-119A Primary Sec	Barium	34,337	
Rev MV Elec Dist Sys	P-23	SS-119A Primary Sec	Cadmium	< 6	
Rev MV Elec Dist Sys	P-23	SS-119A Primary Sec	Chromium	< 14	
Rev MV Elec Dist Sys	P-23	SS-119A Primary Sec	Mercury	< 1	

9

Paint Analysis for Total Metals- Eight (8) Metals
Project No.: **PCN 98860**
Revitalize Medium Voltage Electrical Distribution Systems, Industrial and Payload Processing Areas
Kennedy Space Center, FL

Job Location	Sample No.	Sample Description	PeriodicName	PPM	Dimensions -Inches
Rev MV Elec Dist Sys	P-23	SS-119A Primary Sec	Lead	< 6	
Rev MV Elec Dist Sys	P-23	SS-119A Primary Sec	Selenium	< 6	
Rev MV Elec Dist Sys	P-24	SS-119A Transformer	Silver	< 6	132x170x114
Rev MV Elec Dist Sys	P-24	SS-119A Transformer	Arsenic	< 6	
Rev MV Elec Dist Sys	P-24	SS-119A Transformer	Barium	21,119	
Rev MV Elec Dist Sys	P-24	SS-119A Transformer	Cadmium	< 6	
Rev MV Elec Dist Sys	P-24	SS-119A Transformer	Chromium	751	
Rev MV Elec Dist Sys	P-24	SS-119A Transformer	Mercury	< 1	
Rev MV Elec Dist Sys	P-24	SS-119A Transformer	Lead	774	
Rev MV Elec Dist Sys	P-24	SS-119A Transformer	Selenium	< 6	
Rev MV Elec Dist Sys	P-25	SS-119A Secondary	Silver	< 6	331x170x114
Rev MV Elec Dist Sys	P-25	SS-119A Secondary	Arsenic	< 6	
Rev MV Elec Dist Sys	P-25	SS-119A Secondary	Barium	37,675	
Rev MV Elec Dist Sys	P-25	SS-119A Secondary	Cadmium	< 6	
Rev MV Elec Dist Sys	P-25	SS-119A Secondary	Chromium	< 15	
Rev MV Elec Dist Sys	P-25	SS-119A Secondary	Mercury	< 1	
Rev MV Elec Dist Sys	P-25	SS-119A Secondary	Lead	< 6	
Rev MV Elec Dist Sys	P-25	SS-119A Secondary	Selenium	< 6	
Rev MV Elec Dist Sys	P-26	SS-119B Primary Sec	Silver	< 6	103x35x112
Rev MV Elec Dist Sys	P-26	SS-119B Primary Sec	Arsenic	< 6	
Rev MV Elec Dist Sys	P-26	SS-119B Primary Sec	Barium	47,478	
Rev MV Elec Dist Sys	P-26	SS-119B Primary Sec	Cadmium	< 6	
Rev MV Elec Dist Sys	P-26	SS-119B Primary Sec	Chromium	< 15	
Rev MV Elec Dist Sys	P-26	SS-119B Primary Sec	Mercury	< 1	
Rev MV Elec Dist Sys	P-26	SS-119B Primary Sec	Lead	< 6	
Rev MV Elec Dist Sys	P-26	SS-119B Primary Sec	Selenium	< 6	
Rev MV Elec Dist Sys	P-27	SS-119B Transformer	Silver	< 6	144x90x98
Rev MV Elec Dist Sys	P-27	SS-119B Transformer	Arsenic	< 6	
Rev MV Elec Dist Sys	P-27	SS-119B Transformer	Barium	13,317	
Rev MV Elec Dist Sys	P-27	SS-119B Transformer	Cadmium	< 6	
Rev MV Elec Dist Sys	P-27	SS-119B Transformer	Chromium	4,623	
Rev MV Elec Dist Sys	P-27	SS-119B Transformer	Mercury	< 1	
Rev MV Elec Dist Sys	P-27	SS-119B Transformer	Lead	1,541	
Rev MV Elec Dist Sys	P-27	SS-119B Transformer	Selenium	< 6	
Rev MV Elec Dist Sys	P-28	SS-119B DC Power Supply	Silver	< 6	103x35x112
Rev MV Elec Dist Sys	P-28	SS-119B DC Power Supply	Arsenic	< 6	

10

Paint Analysis for Total Metals- Eight (8) Metals
Project No.: **PCN 98860**
Revitalize Medium Voltage Electrical Distribution Systems, Industrial and Payload Processing Areas
Kennedy Space Center, FL

Job Location	Sample No.	Sample Description	PeriodicName	PPM	Dimensions -Inches
Rev MV Elec Dist Sys	P-28	SS-119B DC Power Supply	Barium	39,798	
Rev MV Elec Dist Sys	P-28	SS-119B DC Power Supply	Cadmium	< 6	
Rev MV Elec Dist Sys	P-28	SS-119B DC Power Supply	Chromium	< 16	
Rev MV Elec Dist Sys	P-28	SS-119B DC Power Supply	Mercury	< 1	
Rev MV Elec Dist Sys	P-28	SS-119B DC Power Supply	Lead	< 6	
Rev MV Elec Dist Sys	P-28	SS-119B DC Power Supply	Selenium	< 6	

11

SPECIFIC NOTES:

A. THESE PAGES COVER THE EXECUTIVE SUMMARY FROM THE PAINT ANALYSIS FOR TOTAL METALS EIGHT (8) METALS REPORT, WHICH IS INCLUDED IN ITS ENTIRETY AS AN APPENDIX TO THE SPECIFICATIONS.

B. THE PAINT SAMPLES TESTED WERE TAKEN FROM EQUIPMENT SPECIFIED TO BE DEMOLISHED OR MODIFIED AS PART OF THIS PROJECT AND ARE IDENTIFIED BY EQUIPMENT DESIGNATION UNDER SAMPLE COLUMN OF THE REPORT.

SYM.	ZONE	DESCRIPTION	DATE	APPROVED
		REVISIONS		

URS
7650 West Courtney Campbell Causeway
Suite 700
Tampa, Florida 33607
Ph: (813) 286-1711 Fax: (813) 286-6587
Florida Engineering Number: 000002

SIGNATURES		DATE
DRAWN	TRS	9/24/12
CHECKED	GHD	9/24/12
SUBMITTED	GARRET KERLY	9/24/12
ST OF LICENSURE: FL		
LICENSE NO.: 54952		
APPROVED	F. WALKER	9/24/12
	S. MEHTA	9/25/12

NATIONAL AERONAUTICS AND SPACE ADMINISTRATION
JOHN F. KENNEDY SPACE CENTER, NASA
KENNEDY SPACE CENTER, FLORIDA

REVITALIZE MEDIUM VOLTAGE ELECTRICAL DISTRIBUTION SYSTEMS, INDUSTRIAL AND PAYLOAD PROCESSING AREAS
EXECUTIVE SUMMARY FROM PAINT ANALYSIS FOR TOTAL METALS

FILE NO.	SIZE	DWG. NO.
	F	79K39135
PCN NO. 98860		SHEET 6

H-004

KSC FORM 1-11A (REV 8/91) (C/G 12/93)

T:\NASA KSC\Task No. 1\Drawings\H-004 ENVIRONMENTAL TESTING REPORTS.dwg 09/26/2012 13:59

NOTICE – WHEN GOVERNMENT DRAWINGS, SPECIFICATIONS, OR OTHER DATA ARE USED FOR ANY PURPOSE OTHER THAN IN CONNECTION WITH A DEFINITELY RELATED GOVERNMENT PROCUREMENT OPERATION, THE UNITED STATES GOVERNMENT THEREBY INCURS NO RESPONSIBILITY NOR ANY OBLIGATION WHATSOEVER; AND THE FACT THAT THE GOVERNMENT MAY HAVE FORMULATED, FURNISHED, OR IN ANY WAY SUPPLIED THE SAID DRAWINGS, SPECIFICATIONS, OR OTHER DATA IS NOT TO BE REGARDED BY IMPLICATION OR OTHERWISE AS IN ANY MANNER LICENSING THE HOLDER OR ANY OTHER PERSON OR CORPORATION, OR CONVEYING ANY RIGHTS OR PERMISSION TO MANUFACTURE, USE, OR SELL ANY PATENTED INVENTION THAT MAY IN ANY WAY BE RELATED THERETO.

1.0 EXECUTIVE SUMMARY

Sample Collection Dates

August 21st, 24th & 28th 2012

State Licenses and/or Certifications

U.S. EPA Certified Lead-Based Paint Activities Firm No. FL-2418-2
Asbestos License # ZA 0000205

Inspector:

Kevin O'Malley, Florida EPA Certified Lead-Based Paint Risk Assessor FL-R-345-3
Asbestos Building Inspector Certification No. 154429

Polychlorinated Biphenyl (PCB) paint chip samples were collected from the following component(s):

Job Location	Sample No.	Sample Description
Rev MV Elec Dist Sys	P-08	SS-B Primary Sec
Rev MV Elec Dist Sys	P-09	SS-B Transformer
Rev MV Elec Dist Sys	P-11	SS-C Primary Sec
Rev MV Elec Dist Sys	P-10	SS-B Secondary
Rev MV Elec Dist Sys	P-06	SS-EE Transformer
Rev MV Elec Dist Sys	P-05	SS-EE Primary Sec
Rev MV Elec Dist Sys	P-13	SS-C Secondary
Rev MV Elec Dist Sys	P-22	SS-F Secondary
Rev MV Elec Dist Sys	P-14	SS-D Primary Sec
Rev MV Elec Dist Sys	P-12	SS-C Transformer
Rev MV Elec Dist Sys	P-07	SS-EE Secondary Switch
Rev MV Elec Dist Sys	P-19	SS-E Secondary
Rev MV Elec Dist Sys	P-17	SS-E Primary Sec

Job Location	Sample No.	Sample Description
Rev MV Elec Dist Sys	P-20	SS-F Primary
Rev MV Elec Dist Sys	P-01	LBS-14
Rev MV Elec Dist Sys	P-02	LBS-57
Rev MV Elec Dist Sys	P-03	LBS-58
Rev MV Elec Dist Sys	P-04	LBS-80
Rev MV Elec Dist Sys	P-15	SS-D Transformer
Rev MV Elec Dist Sys	P-16	SS-D Secondary
Rev MV Elec Dist Sys	P-18	SS-E Transformer
Rev MV Elec Dist Sys	P-21	SS-F Transformer
Rev MV Elec Dist Sys	P-23	SS-119A Primary Sec
Rev MV Elec Dist Sys	P-24	SS-119A Transformer
Rev MV Elec Dist Sys	P-25	SS-119A Secondary
Rev MV Elec Dist Sys	P-26	SS-119B Primary Sec
Rev MV Elec Dist Sys	P-27	SS-119B Transformer
Rev MV Elec Dist Sys	P-28	SS-119B DC Power Supply

Overview

According to your instructions ***PbO_3*** Environmental Testing & Service Co., Inc. has collected twenty-eight (28) representative paint chip samples of exposed painted components as designated by our client.

The samples were analyzed by Method SW846 8082 for Polychlorinated Biphenyls (PCBs).

Based upon our visual observations, bulk sampling of suspect materials, and subsequent laboratory analysis, we have determined that PCB's were detected in seven (7) component paint chip samples.

Job Location	Sample No.	Sample Description	Dimensions -Inches	Aroclor-1254	PCBs ≥ 50 ppm
Rev MV Elec Dist Sys	P-08	SS-B Primary Sec	80x108x104	1,434.032 ppm	Yes
Rev MV Elec Dist Sys	P-09	SS-B Transformer	75x60x90	3,697.446 ppm	Yes
Rev MV Elec Dist Sys	P-11	SS-C Primary Sec	81x108x104	4,083.373 ppm	Yes
Rev MV Elec Dist Sys	P-10	SS-B Secondary	77x63x108	5,322.713 ppm	Yes
Rev MV Elec Dist Sys	P-06	SS-EE Transformer	54x53x58	53.393 ppm	Yes
Rev MV Elec Dist Sys	P-05	SS-EE Primary Sec	114x88x90	67.689 ppm	Yes
Rev MV Elec Dist Sys	P-13	SS-C Secondary	77x63x108	8,044.810 ppm	Yes

C

All materials with PCB concentrations greater than or equal to 50 ppm are regulated by and shall be managed in accordance with the requirements specified in 40 CFR 761. Requirements for managing and disposing of PCBs are found in Kennedy NASA Procedural Requirements (KNPR) 8500.1 Chapter 19.

2.0 DETAILED FINDINGS

Job Location	Sample No.	Sample Description	Dimensions - Inches	Aroclor-1254	PCBs ≥ 50 ppm
Rev MV Elec Dist Sys	P-08	SS-B Primary Sec	80x108x104	1,434.032 ppm	Yes
Rev MV Elec Dist Sys	P-09	SS-B Transformer	75x60x90	3,697.446 ppm	Yes
Rev MV Elec Dist Sys	P-11	SS-C Primary Sec	81x108x104	4,083.373 ppm	Yes
Rev MV Elec Dist Sys	P-10	SS-B Secondary	77x63x108	5,322.713 ppm	Yes
Rev MV Elec Dist Sys	P-06	SS-EE Transformer	54x53x58	53.393 ppm	Yes
Rev MV Elec Dist Sys	P-05	SS-EE Primary Sec	114x88x90	67.689 ppm	Yes
Rev MV Elec Dist Sys	P-13	SS-C Secondary	77x63x108	8,044.810 ppm	Yes
Rev MV Elec Dist Sys	P-22	SS-F Secondary	77x63x108	0.644 ppm	No
Rev MV Elec Dist Sys	P-14	SS-D Primary Sec	80x108x104	11.407 ppm	No
Rev MV Elec Dist Sys	P-12	SS-C Transformer	75x60x90	13.335 ppm	No
Rev MV Elec Dist Sys	P-07	SS-EE Secondary Switch	80x60x90	23.351 ppm	No
Rev MV Elec Dist Sys	P-19	SS-E Secondary	77x63x108	3.513 ppm	No
Rev MV Elec Dist Sys	P-17	SS-E Primary Sec	81x108x104	9.536 ppm	No
Rev MV Elec Dist Sys	P-20	SS-F Primary	81x108x104	9.889 ppm	No
Rev MV Elec Dist Sys	P-01	LBS-14	70x23x75	BQL	No
Rev MV Elec Dist Sys	P-02	LBS-57	80x23x73	BQL	No
Rev MV Elec Dist Sys	P-03	LBS-58	80x23x73	BQL	No
Rev MV Elec Dist Sys	P-04	LBS-80	94x24x88	BQL	No
Rev MV Elec Dist Sys	P-15	SS-D Transformer	76x61x90	BQL	No
Rev MV Elec Dist Sys	P-16	SS-D Secondary	77x63x108	BQL	No
Rev MV Elec Dist Sys	P-18	SS-E Transformer	76x60x90	BQL	No
Rev MV Elec Dist Sys	P-21	SS-F Transformer	76x60x90	BQL	No
Rev MV Elec Dist Sys	P-23	SS-119A Primary Sec	102x36x113	BQL	No
Rev MV Elec Dist Sys	P-24	SS-119A Transformer	132x170x114	BQL	No
Rev MV Elec Dist Sys	P-25	SS-119A Secondary	331x170x114	BQL	No
Rev MV Elec Dist Sys	P-26	SS-119B Primary Sec	103x35x112	BQL	No
Rev MV Elec Dist Sys	P-27	SS-119B Transformer	144x90x98	BQL	No
Rev MV Elec Dist Sys	P-28	SS-119B DC Power Supply	103x35x112	BQL	No

BQL =Below Quantitation Limit

SPECIFIC NOTES:

A. THESE PAGES COVER THE EXECUTIVE SUMMARY FROM THE POLYCHLORINATED BIPHENYL (PCB) TESTING – PAINT CHIP SAMPLES REPORT, WHICH IS INCLUDED IN ITS ENTIRETY AS AN APPENDIX TO THE SPECIFICATIONS.

B. THE PAINT SAMPLES TESTED WERE TAKEN FROM EQUIPMENT SPECIFIED TO BE DEMOLISHED OR MODIFIED AS PART OF THIS PROJECT, AND ARE IDENTIFIED BY EQUIPMENT DESIGNATION UNDER SAMPLE COLUMN OF THE REPORT.

C. THESE ITEMS OF EQUIPMENT ARE TO BE TURNED OVER TO THE GOVERNMENT FOR DISPOSAL BY THE GOVERNMENT. DELIVER THESE ITEMS OF EQUIPMENT TO A LOCATION ON THE KSC THAT WILL BE DETERMINED BY THE GOVERNMENT DURING CONSTRUCTION. FOR BIDDING PURPOSES, THE CONTRACTOR SHALL ASSUME THAT THE ONE-WAY DELIVERY ROUTE TO THE LOCATION ON THE KSC SHALL BE NO MORE THAN 10 MILES.

SYM.	ZONE	DESCRIPTION	DATE	APPROVED

REVISIONS

URS
7650 West Courtney Campbell Causeway
Suite 700
Tampa, Florida 33607
Ph: (813) 286-1711 Fax: (813) 286-6587
Florida Engineering Number: 000002

SIGNATURES		DATE
DRAWN	TRS	9/24/12
CHECKED	GHD	9/24/12
SUBMITTED	GARRET KERLY	9/24/12
ST OF LICENSURE: FL		
LICENSE NO.: 54952		
APPROVED	F. WALKER	9/26/12
	S. MEHTA	9/25/12

NATIONAL AERONAUTICS AND SPACE ADMINISTRATION
JOHN F. KENNEDY SPACE CENTER, NASA
KENNEDY SPACE CENTER, FLORIDA

REVITALIZE MEDIUM VOLTAGE ELECTRICAL DISTRIBUTION SYSTEMS, INDUSTRIAL AND PAYLOAD PROCESSING AREAS
EXECUTIVE SUMMARY FROM PCB TESTING – PAINT CHIP SAMPLES

FILE NO. | SIZE F | DWG. NO. 79K39135

PCN NO. 98860 | SHEET 7

H-005

KSC FORM 1-11A (REV 8/91) (C/G 12/93)
T:\NASA KSC\Task No. 1\Drawings\H-005 ENVIRONMENTAL TESTING REPORTS.dwg 09/20/2012 13:59

NOTICE – WHEN GOVERNMENT DRAWINGS, SPECIFICATIONS, OR OTHER DATA ARE USED FOR ANY PURPOSE OTHER THAN IN CONNECTION WITH A DEFINITELY RELATED GOVERNMENT PROCUREMENT OPERATION, THE UNITED STATES GOVERNMENT THEREBY INCURS NO RESPONSIBILITY NOR ANY OBLIGATION WHATSOEVER; AND THE FACT THAT THE GOVERNMENT MAY HAVE FORMULATED, FURNISHED, OR IN ANY WAY SUPPLIED THE SAID DRAWINGS, SPECIFICATIONS, OR OTHER DATA IS NOT TO BE REGARDED BY IMPLICATION OR OTHERWISE AS IN ANY MANNER LICENSING THE HOLDER OR ANY OTHER PERSON OR CORPORATION, OR CONVEYING ANY RIGHTS OR PERMISSION TO MANUFACTURE, USE, OR SELL ANY PATENTED INVENTION THAT MAY IN ANY WAY BE RELATED THERETO.

1.0 EXECUTIVE SUMMARY

Sample Collection Date

August 08, 2012

State Licenses and/or Certifications

U.S. EPA Certified Lead-Based Paint Activities Firm No. FL-2418-2
Asbestos License # ZA 0000205

Inspector:

Kevin O'Malley, Florida EPA Certified Lead-Based Paint Risk Assessor FL-R-345-3
Asbestos Building Inspector Certification No. 154429

Polychlorinated Biphenyl (PCB) Oil samples were collected from the following component(s):

Transformer Equip No.	Transformer Serial No.	Location
SS-C	E-688749	O&C(M7-355) SE Pad
SS-B	E-689245A	O&C(M7-355) SE Pad
SS-F	E-689242	O&C(M7-355) SE Pad
SS-EE	EE-4GR-43901	O&C(M7-355) Rm 1410
SS-E	E694831	O&C(M7-355) SE Pad
SS-119A	H-BT0911-0101	S. IACP (M7-407)
SS-D	E6892408	O&C(M7-355) SE Pad
SS-119B	HBB1199	S. IACP (M7-407)

Overview

According to your instructions ***PbO_3*** Environmental Testing & Service Co., Inc. collected eight (8) samples of transformer oil for analysis.

The samples were analyzed by Method SW846 8082 for Polychlorinated Biphenyls (PCBs).

Based on subsequent laboratory analysis, we have determined that PCB's were not detected in the eight (8) samples analyzed.

All materials with PCB concentrations greater than or equal to 50 ppm are regulated by and shall be managed in accordance with the requirements specified in 40 CFR 761. Requirements for managing and disposing of PCBs are found in Kennedy NASA Procedural Requirements (KNPR) 8500.1 Chapter 19.

2.0 DETAILED FINDINGS

Equip No.	Serial No.	Location	Aroclor-1254	Quantitation Limit	PCBs ≥ 50 ppm
SS-C	E-688749	O&C(M7-355) SE Pad	**0.461 ppm**	414	No
SS-B	E-689245A	O&C(M7-355) SE Pad	**0.629 ppm**	423	No
SS-F	E-689242	O&C(M7-355) SE Pad	**1.278 ppm**	458	No
SS-EE	EE-4GR-43901	O&C(M7-355) Rm 1410	**1.958 ppm**	439	No
SS-E	E694831	O&C(M7-355) SE Pad	**7.657 ppm**	464	No
SS-119A	H-BT0911-0101	S. IACP (M7-407)	BQL	496	No
SS-D	E6892408	O&C(M7-355) SE Pad	BQL	394	No
SS-119B	HBB1199	S. IACP (M7-407)	BQL	436	No

BQL =Below Quantitation Limit

SPECIFIC NOTES:

A. THESE PAGES COVER THE EXECUTIVE SUMMARY FROM THE POLYCHLORINATED BIPHENYL (PCB) TESTING – TRANSFORMER OIL REPORT, WHICH IS INCLUDED IN ITS ENTIRETY AS AN APPENDIX TO THE SPECIFICATIONS.

B. THE TRANSFORMER OIL SAMPLES TESTED WERE TAKEN FROM TRANSFORMERS SPECIFIED TO BE DEMOLISHED AS PART OF THE WORK OF THIS PROJECT, AND ARE IDENTIFIED BY EQUIPMENT DESIGNATION.

SYM.	ZONE	DESCRIPTION	DATE	APPROVED
		REVISIONS		

URS
7650 West Courtney Campbell Causeway
Suite 700
Tampa, Florida 33607
Ph: (813) 286-1711 Fax: (813) 286-6587
Florida Engineering Number: 000002

SIGNATURES		DATE
DRAWN	TRS	9/24/12
CHECKED	GHD	9/24/12
SUBMITTED	GARRET HEMP	9/24/12
ST OF LICENSURE: FL		
LICENSE NO.: 54952		
APPROVED	F. WALKER	9/25/12
	S. MEHTA	9/25/12

NATIONAL AERONAUTICS AND SPACE ADMINISTRATION
JOHN F. KENNEDY SPACE CENTER, NASA
KENNEDY SPACE CENTER, FLORIDA

REVITALIZE MEDIUM VOLTAGE ELECTRICAL DISTRIBUTION SYSTEMS, INDUSTRIAL AND PAYLOAD PROCESSING AREAS
EXECUTIVE SUMMARY FROM PCB TESTING – TRANSFORMER OIL

FILE NO. | SIZE F | DWG. NO. 79K39135
PCN NO. 98860 | SHEET 8

H-006

T:\NASA KSC\Task 40-1\Drawings\H-006 ENVIRONMENTAL TESTING REPORTS.dwg 09/25/2012 14:00
KSC FORM 1-11A (REV 5/91) (C/G 12/93)

NOTICE – WHEN GOVERNMENT DRAWINGS, SPECIFICATIONS, OR OTHER DATA ARE USED FOR ANY PURPOSE OTHER THAN IN CONNECTION WITH A DEFINITELY RELATED GOVERNMENT PROCUREMENT OPERATION, THE UNITED STATES GOVERNMENT THEREBY INCURS NO RESPONSIBILITY NOR ANY OBLIGATION WHATSOEVER; AND THE FACT THAT THE GOVERNMENT MAY HAVE FORMULATED, FURNISHED, OR IN ANY WAY SUPPLIED THE SAID DRAWINGS, SPECIFICATIONS OR OTHER DATA IS NOT TO BE REGARDED BY IMPLICATION OR OTHERWISE AS IN ANY MANNER LICENSING THE HOLDER OR ANY OTHER PERSON OR CORPORATION, OR CONVEYING ANY RIGHTS OR PERMISSION TO MANUFACTURE, USE, OR SELL ANY PATENTED INVENTION THAT MAY IN ANY WAY BE RELATED THERETO.

GENERAL CONSTRUCTION NOTES

A. THE CONTRACTOR SHALL BECOME FAMILIAR WITH THE PERMIT AND INSPECTION REQUIREMENTS SPECIFIED BY THE VARIOUS GOVERNMENTAL AGENCIES HAVING JURISDICTION OVER THE PROPOSED IMPROVEMENTS, THE ENGINEER, AND THE ARCHITECT. THE CONTRACTOR SHALL OBTAIN ALL NECESSARY PERMITS PRIOR TO CONSTRUCTION, AND SCHEDULE ANY NECESSARY INSPECTIONS ACCORDING TO AGENCY INSTRUCTIONS. CONTRACTOR IS RESPONSIBLE FOR OBTAINING THE DEWATERING PLAN APPROVED BY THE WATER MANAGEMENT DISTRICT, IF APPLICABLE.

B. ALL SPECIFICATIONS AND DOCUMENTS REFERRED TO IN THESE PLANS SHALL BE OF THE CURRENT REVISION.

C. ALL WORK PERFORMED SHALL COMPLY WITH THE REGULATIONS AND ORDINANCES OF THE VARIOUS GOVERNMENTAL AGENCIES HAVING JURISDICTION OVER THE WORK.

D. CONTRACTOR SHALL SUBMIT SHOP DRAWINGS ON ALL PRE-CAST AND MANUFACTURED ITEMS TO THE OWNER'S ENGINEER FOR APPROVAL. FAILURE TO OBTAIN APPROVAL BEFORE FABRICATION AND/OR INSTALLATION MAY RESULT IN REMOVAL AND REPLACEMENT AT CONTRACTOR'S EXPENSE.

E. WORK PERFORMED UNDER THIS CONTRACT SHALL INTERFACE SMOOTHLY WITH OTHER WORK BEING PERFORMED BY OTHER CONTRACTORS AND UTILITY COMPANIES. IT WILL BE NECESSARY FOR THE CONTRACTOR TO COORDINATE AND SCHEDULE HIS ACTIVITIES, WHERE NECESSARY, WITH OTHER CONTRACTORS AND UTILITY COMPANIES (INCLUDING, BUT NOT LIMITED TO LIGHTING, POWER, TELEPHONE, CABLE, GAS, ETC...).

F. THE WATER, SANITARY SEWER, AND STORM DRAINAGE FACILITIES ARE SUBJECT TO THE REVIEW AND APPROVAL OF APPLICABLE AGENCIES. IT SHALL BE THE RESPONSIBILITY OF THE CONTRACTOR TO OBTAIN THE REQUIRED PERMITS TO PERFORM WORK IN THE PUBLIC RIGHT-OF-WAY.

G. IT WILL BE NECESSARY TO EXAMINE, COORDINATE AND ADJUST ACCORDINGLY THE PROPOSED LOCATIONS OF THE VARIOUS COMPONENTS OF THE UTILITIES. IT SHALL BE THE RESPONSIBILITY OF THE CONTRACTOR TO SUBMIT COORDINATION DRAWINGS SHOWING PIPE SIZES, STRUCTURES, AND ELEVATIONS. THE CONTRACTOR SHALL BE RESPONSIBLE FOR THE SCHEDULING AND COORDINATION OF THE UNDERGROUND WORK ASSOCIATED WITH THIS PROJECT. THE CONTRACTOR SHALL OBTAIN A KSC EXCAVATION PERMIT PRIOR TO ALL EXCAVATIONS. LOCATE ALL EXISTING BURIED UTILITIES BY HAND-DIG METHODS.

H. ALL MECHANICAL EQUIPMENT SHALL BE SCREENED FROM VIEW, WHEN POSSIBLE.

I. CONTRACTOR IS RESPONSIBLE FOR OBTAINING ANY ENVIRONMENTAL PROTECTION AGENCY PERMITTING WHERE REQUIRED. CONTRACTOR SHALL COORDINATE ALL ENVIRONMENTAL ISSUES WITH THE NASA ENVIRONMENTAL MANAGEMENT BRANCH.

J. TOPOGRAPHIC SURVEY PREPARED BY OTHERS IS INCLUDED WITHIN THE CONSTRUCTION BID SET. CONTRACTOR SHALL VERIFY THE SURVEY DATUM USED FOR THE DESIGN OF THE PROJECT. THE SAME DATUM SHALL BE USED FOR CONSTRUCTION.

K. THE CONTRACTOR IS RESPONSIBLE FOR REPAIRING ANY DAMAGE TO EXISTING FACILITIES, ABOVE OR BELOW GROUND, THAT MAY OCCUR AS A RESULT OF THE WORK PERFORMED BY THE CONTRACTOR CALLED FOR IN THIS CONTRACT.

L. ALL UNDERGROUND UTILITIES MUST BE IN PLACE AND TESTED OR INSPECTED PRIOR TO BASE AND PAVEMENT CONSTRUCTION.

M. FORTY-EIGHT (48) HOUR NOTICE IS REQUIRED TO THE ENGINEER PRIOR TO SITE INSPECTIONS AND/OR WITNESSING OF STORM, WATER, AND SEWER TESTING.

N. CONTRACTOR SHALL SCHEDULE AND COORDINATE A PRE-CONSTRUCTION CONFERENCE WITH AGENCIES HAVING JURISDICTION.

O. CONTRUCTION SHALL ADHERE TO APPLICABLE AGENCY CRITERIA, PERMIT CONDITIONS, AS WELL AS SPECIFICATIONS PROVIDED BY OWNER.

P. IT IS THE RESPONSIBILITY OF THE CONTRACTOR TO COORDINATE WITH THE OWNER CONCERNING LIMITS OF CONSTRUCTION, TRANSITIONS, ETC. WHICH MAY NOT BE SHOWN ON THESE PLANS.

Q. CONTRACTOR SHALL VERIFY LOCATIONS AND DEPTHS OF ALL EXISTING UNDERGROUND UTILITIES PRIOR TO BEGINNING CONSTRUCTION AND REPORT ANY DISCREPANCIES TO THE OWNER OR ENGINEER IMMEDIATELY FOR RESOLUTION.

R. DEWATERING WILL BE NECESSARY AS PART OF THIS PROJECT TO CONSTRUCT AND PLACE ALL PIPELINES, STRUCTURES, AND BASE MATERIAL IN A DRY TRENCH. THE PRODUCED GROUND WATER EFFLUENT SHALL BE SAMPLED BEFORE THE COMMENCEMENT OF DISCHARGE TO DETERMINE IF CONTAMINATION EXISTS. THE CONTRACTOR SHALL SUBMIT A DEWATERING WORK PLAN TO THE CONTRACTING OFFICE FOR APPROVAL. SEE EARTHWORK SPECIFICATION SECTION 31 00 00, SUBSECTION 1.3.3. THE COST OF SAID DEWATERING WORK AND APPURTENANCES SHALL BE INCLUDED IN THE COST OF THE PIPE AND STRUCTURE INSTALLATION.

SAFETY NOTES

A. DURING THE CONSTRUCTION AND MAINTENANCE OF THIS PROJECT, ALL OSHA AND KSC SAFETY REGULATIONS ARE TO BE ENFORCED. THE CONTRACTOR OR HIS REPRESENTATIVE SHALL BE RESPONSIBLE FOR THE CONTROL AND SAFETY OF THE TRAVELING PUBLIC AND THE SAFETY OF HIS PERSONNEL.

B. LABOR SAFETY REGULATIONS SHALL CONFORM TO THE PROVISIONS SET FORTH BY OSHA IN THE FEDERAL REGISTER OF THE DEPARTMENT OF TRANSPORTATION AND CONSTRUCTION WORK PER STANDARD 1910.12.

C. CONTRACTOR SHALL PROVIDE AND MAINTAIN ITS OWN SAFETY EQUIPMENT IN ACCORDANCE WITH ITS HEALTH & SAFETY PROGRAM AND ALL OTHER APPLICABLE LEGAL AND HEALTH AND SAFETY REQUIREMENTS. THE CONTRACTOR IS ALSO RESPONSIBLE FOR PROVIDING ITS EMPLOYEES AND SUB CONTRACTORS WITH ADEQUATE INFORMATION AND TRAINING TO ENSURE THAT ALL EMPLOYEES AND SUB CONTRACTORS AND SUB CONTRACTOR'S EMPLOYEES COMPLY WITH ALL APPLICABLE REQUIREMENTS. CONTRACTOR SHALL REMAIN IN COMPLIANCE WITH ALL OCCUPATION SAFETY AND HEALTH REGULATIONS AS WELL AS THE ENVIRONMENTAL PROTECTION LAWS. THE FOLLOWING IS NOT TO BE PERCEIVED AS THE ENTIRE SAFETY PROGRAM BUT JUST BASIC REQUIREMENTS.

D. ALL EXCAVATIONS BY THE CONTRACTOR SHALL CONFORM TO THE REQUIREMENTS OF THE DEPARTMENT OF LABOR'S OCCUPATIONAL SAFETY AND HEALTH ADMINISTRATION RULES AND REGULATIONS AND FLORIDA TRENCH SAFETY ACT. PARTICULAR ATTENTION MUST BE PAID TO THE CONSTRUCTION STANDARDS FOR EXCAVATIONS, 29 CFR PART 1926, SUBPART P.

E. THE MINIMUM STANDARDS AS SET FORTH IN THE CURRENT EDITION OF "THE STATE OF FLORIDA, MANUAL ON TRAFFIC CONTROL AND SAFE PRACTICES FOR STREET AND HIGHWAY CONSTRUCTION, MAINTENANCE AND UTILITY OPERATIONS" SHALL BE FOLLOWED IN THE DESIGN APPLICATION, INSTALLATION, MAINTENANCE AND REMOVAL OF ALL TRAFFIC CONTROL DEVICES, WARNING DEVICES AND BARRIERS NECESSARY TO PROTECT THE PUBLIC AND WORKMEN FROM HAZARDS WITHIN THE PROJECT LIMITS.

F. ALL TRAFFIC CONTROL MARKINGS AND DEVICES SHALL CONFORM TO THE PROVISIONS SET FORTH IN THE MANUAL ON UNIFORM TRAFFIC CONTROL DEVICES PREPARED BY THE U.S. DEPARTMENT OF TRANSPORTATION FEDERAL HIGHWAY ADMINISTRATION.

G. IT SHALL BE THE SOLE RESPONSIBILITY OF THE CONTRACTOR TO COMPLY AND ENFORCE ALL APPLICABLE SAFETY REGULATIONS. THE ABOVE INFORMATION HAS BEEN PROVIDED FOR THE CONTRACTOR'S INFORMATION ONLY AND DOES NOT IMPLY THAT THE OWNER OR ENGINEER WILL INSPECT AND/OR ENFORCE SAFETY REGULATIONS.

H. THE CONTRACTOR SHALL EXERCISE EXTREME CAUTION IN AREAS OF BURIED UTILITIES AND SHALL LOCATE ALL EXISTING BURIED UTILITIES BY HAND-DIG METHODS. THE CONTRACTOR SHALL OBTAIN A KSC EXCAVATION PERMIT PRIOR TO ALL EXCAVATIONS.

PROJECT SPECIFIC NOTES

1. THE CONTRACTOR IS TO COORDINATE HIS WORK AND SITE ACCESS WITH THE OTHER ENTITIES THAT MAY BE WORKING ON SITE. ANY CONFLICTS ON COORDINATION ISSUES SHALL BE BROUGHT TO THE ATTENTION OF THE OWNER AND/OR ENGINEER FOR MUTUAL RESOLUTION.
2. FORTY-EIGHT (48) HOUR NOTICE IS REQUIRED BY THE ENGINEER PRIOR TO SITE INSPECTIONS AND/OR WITNESSING OF WATER AND/OR SEWER TESTING.
3. ALL EXISTING TREES TO REMAIN SHALL BE BARRICADE PROTECTED FROM DAMAGE BY EQUIPMENT AND/OR PERSONNEL.
4. THE PROPOSED PROJECT WILL NOT ADVERSELY AFFECT SIGNIFICANT HISTORICAL OR ARCHEOLOGICAL RESOURCES UNDER THE PROVISIONS OF SECTION 267.061, F.S. IF EVIDENCE OF THE EXISTENCE OF HISTORIC OR ARCHEOLOGICAL RESOURCES IS DISCOVERED OR OBSERVED AT DEVELOPMENT SITES OR DURING DEVELOPMENT ACTIVITIES AFTER FINAL APPROVAL, ALL WORK SHALL CEASE IN THE AREA OF EFFECT AS DETERMINED BY THE DIRECTOR. THE CONTRACTOR SHALL NOTIFY THE ENGINEER AND OWNER IMMEDIATELY, AND THE DEPARTMENT OF HISTORICAL RESOURCES WITHIN TWO WORKING DAYS. EXAMPLES OF EVIDENCE OF HISTORIC RESOURCES INCLUDE WHOLE OR FRAGMENTARY STONE TOOLS, SHELL TOOLS, ABORIGINAL OR HISTORIC POTTERY, HISTORIC GLASS, HISTORIC BOTTLES, BONE TOOLS, HISTORIC BUILDING FOUNDATIONS, SHELL MOUNDS, SHELL MIDDENS, OR SAND MOUNDS. THE DIRECTOR SHALL ASSESS THE SIGNIFICANCE OF THE FINDS AND MITIGATE ANY ADVERSE EFFECTS AS SOON AS POSSIBLE, BUT NO LATER THAN THREE WORKING DAYS OF NOTIFICATION.

TESTING SCHEDULE

NOTE: REFER TO PLANS AND/OR SURVEY FOR ADDITIONAL ABBREVIATIONS NOT SHOWN IN THIS INDEX.

ITEM	TEST	TEST FREQUENCY
PIPE TRENCH BACK FILL OVER PIPELINES AND AROUND STRUCTURES FROM R.O.W. LINE TO R.O.W. LINE AND IN STRUCTURAL AREAS	OPTIMUM MOISTURE/MAXIMUM DENSITY 98% OF MAXIMUM DENSITY AS DETERMINED BY AASHTO T180-57 (ASTM D1557-70)	PER SOIL TYPE (SEE NOTES 1 AND 2 BELOW)
STABILIZED SUB GRADE	OPTIMUM MOISTURE/MAXIMUM DENSITY MINIMUM 40 LBR 98% OF MAXIMUM DENSITY AS DETERMINED BY AASHTO T180-57 (ASTM D1557-70)	PER MATERIAL TYPE PER MATERIAL TYPE (SEE NOTES 1 & 3 BELOW)
BASE (OTHER THAN SOIL CEMENT)	OPTIMUM MOISTURE/MAXIMUM DENSITY MINIMUM 100 LBR 98% OF MAXIMUM DENSITY AS DETERMINED BY AASHTO T180-57 (ASTM D1557-70) - NO TOLERANCE GRADATION, ATTERBURG LIMITS	PER SOURCE PER SOURCE EACH LIFT (SEE NOTE 3 BELOW) PER SOURCE
BASE (SOIL CEMENT)	SOIL CEMENT SHALL BE PLANT MIX OR PUG MILL MIX - NO MIX IN PLACE 95% MAXIMUM DRY DENSITY AS DETERMINED BY AASHTO T-134 MINIMUM COMPRESSIVE STRENGTH AT 7 DAYS THICKNESS TEST CORES	 1 PER 300 LF (MIN 1 PER STREET) 3 SAMPLES COMPACTED DAILY (300 PSI) 300 FT. INTERVALS (MIN 1 PER STREET)
CONCRETE (SEE NOTE 4 BELOW) (PER AASHTO & ASTM SPECS)	SLUMP TEST MINIMUM COMPRESSIVE STRENGTH AT 28 DAYS COMPRESSIVE STRENGTH CYLINDERS AIR CONTENT	ONE PER SET OF CYLINDERS 3,500 PSI ONE SET OF THREE (3) CYLINDERS FOR 100 CUBIC YARDS OR FRACTION THEREOF ONE PER SET OF CYLINDERS
ASPHALTIC CONCRETE (PER FDOT SECTION 320)	AGGREGATE ANALYSIS DESIGN MIX BITUMEN CONTENT GRADATION STABILITY FLOW PROPERTIES OF IN-PLACE MATERIALS (MARSHALL) THICKNESS 95% OF LAB DENSITY	ONE PER DESIGN ONE PER TYPE ONE PER DAY ONE PER DAY ONE PER DAY (SEE NOTE 3 BELOW) (SEE NOTE 3 BELOW)

1. TESTS SHALL BE LOCATED NO MORE THAN 500 FEET APART. TESTS SHALL BE PERFORMED ON EACH LIFT, EXCEPT THAT TESTS SHALL NOT BE FURTHER APART THAN ONE (1) FOOT VERTICALLY. FIELD DENSITIES SHALL BE TAKEN OVER ALL ROAD CROSSINGS. FIELD DENSITIES FOR SANITARY LINES SHALL BE STAGGERED TO INCLUDE RESULTS OVER SERVICE LATERALS. THERE SHALL BE A MINIMUM OF ONE (1) TEST SERIES FOR EACH 6 INCHES OF LIFT OVER PIPELINE BETWEEN MANHOLES. TESTS AROUND STRUCTURES SHALL BE SPIRALED IN 6 INCH LIFTS. TESTS AROUND BOX CULVERTS SHALL DONE ON BOTH SIDES EVERY LIFT.
2. FOR FLEXIBLE PIPE (CORRUGATED STEEL OR ALUMINUM), 95% OF MAXIMUM DENSITY (AASHTO-T99) PER FDOT SUPPLEMENTAL SPECIFICATIONS SUB ARTICLE 125-8.3.2 AS MODIFIED.
3. TESTS SHALL BE LOCATED NO MORE THAN 300 FEET APART. THERE SHALL BE NO LESS THAN THREE (3) TESTS PER ROAD.
4. APPLIES TO SITE CONCRETE SUCH AS CURBS, GUTTERS, FLUMES, DRIVEWAYS AND SIDEWALKS.
5. ENGINEER OF RECORD SHALL RECEIVE MATERIAL TESTING REPORTS NO LATER THAN ONE (1) WEEK FROM THE TEST DATE.
6. TESTING FOR RCP SHALL BEGIN AT THE SPRING LINE OF THE PIPE.
7. EMBANKMENT, FILL, AND BACKFILL MATERIAL SHALL BE PLACED AND COMPACTED IN LIFTS NOT TO EXCEED TWELVE (12) INCHES VERTICALLY. EACH COMPACTED LIFT SHALL PASS THE AFOREMENTIONED TESTING CRITERIA BEFORE PROCEEDING TO THE NEXT VERTICAL LIFT.
8. DENSITY TESTS SHALL BE PERFORMED AT A MINIMUM FREQUENCY OF ONE TEST PER EVERY 250 SQUARE YARDS OF FILL MATERIAL BEING PLACED, PER VERTICAL LIFT.
9. IF SUCCESSIVE VERTICAL LIFTS ARE PLACED, THE DENSITY TESTS SHALL BE STAGGERED SO AS TO NOT BE REPEATED IN THE SAME LOCATION.

SYM.	ZONE	DESCRIPTION	DATE	APPROVED
REVISIONS				

URS
7650 West Courtney Campbell Causeway
Suite 700
Tampa, Florida 33607
Ph: (813) 286-1711 Fax: (813) 286-6587
Florida Engineering Number: 000002

SIGNATURES		DATE
DRAWN	CAB	9/24/12
CHECKED	JWG	9/24/12
SUBMITTED	VICKI M. HARTMAN	9/24/12
ST OF LICENSURE: FL		
LICENSE NO.: 54611		
APPROVED	F. WALKER	9/24/12
	S. MEHTA	9/25/12

NATIONAL AERONAUTICS AND SPACE ADMINISTRATION
JOHN F. KENNEDY SPACE CENTER, NASA
KENNEDY SPACE CENTER, FLORIDA

REVITALIZE MEDIUM VOLTAGE ELECTRICAL DISTRIBUTION SYSTEMS, INDUSTRIAL AND PAYLOAD PROCESSING AREAS

GENERAL NOTES AND TESTING SCHEDULE

C-001

FILE NO.	SIZE	DWG. NO.
	F	79K39135
PCN NO.	98860	SHEET 9

T:\NASA KSC\Task No. 1\Drawings\C-001 GENERAL NOTES AND ABBREVIATIONS.dwg 09/20/2012 14:00

KSC FORM 1-11A (REV 6/91) (C/G 12/93)

NOTICE – WHEN GOVERNMENT DRAWINGS, SPECIFICATIONS, OR OTHER DATA ARE USED FOR ANY PURPOSE OTHER THAN IN CONNECTION WITH A DEFINITELY RELATED GOVERNMENT PROCUREMENT OPERATION, THE UNITED STATES GOVERNMENT THEREBY INCURS NO RESPONSIBILITY NOR ANY OBLIGATION WHATSOEVER; AND THE FACT THAT THE GOVERNMENT MAY HAVE FORMULATED, FURNISHED, OR IN ANY WAY SUPPLIED THE SAID DRAWINGS, SPECIFICATIONS, OR OTHER DATA IS NOT TO BE REGARDED BY IMPLICATION OR OTHERWISE AS IN ANY MANNER LICENSING THE HOLDER OR ANY OTHER PERSON OR CORPORATION, OR CONVEYING ANY RIGHTS OR PERMISSION TO MANUFACTURE, USE, OR SELL ANY PATENTED INVENTION THAT MAY IN ANY WAY BE RELATED THERETO.

STANDARD ABBREVIATIONS

AAA	AMERICAN AUTOMOBILE ASSOCIATION
AASHO	AMERICAN ASSOCIATION OF STATE HIGHWAY OFFICIALS
AASHTO	AMERICAN ASSOCIATION OF STATE HIGHWAY AND TRANSPORTATION OFFICIALS
ABC	ASPHALT BASE COURSE
ABD	ABANDONED
ABS	ACRYLONITRITE-BUTADIENE-STYRENE PIPE
AC	ACRE
AC or ASPH CONC	ASPHALTIC CONCRETE
ACCEL	ACCELERATION
ACT	ACTUATED
ADJ	ADJUST
ADT	AVERAGE DAILY TRAFFIC
AADT	ANNUAL AVERAGE DAILY TRAFFIC
AGG	AGGREGATE
AH	AHEAD
AISC	AMERICAN INSTITUTE OF STEEL CONSTRUCTION
ALT	ALTERNATE
ALUM	ALUMINUM
AM	12:00 MIDNIGHT UNTIL 12:00 NOON
ANSI	AMERICAN NATIONAL STANDARDS INSTITUTE
AOS	APPARENT OPENING SIZE
APPL	APPLIED, APPLICATION
APPRH	APPROACH
APPROX	APPROXIMATE
ARTBA	AMERICAN ROAD & TRANSPORTATION BUILDERS ASSOCIATION
ARTF	ARTIFICIAL
ASPH	ASPHALT
ASSEM	ASSEMBLY
ASTM	AMERICAN SOCIETY FOR TESTING MATERIALS
ATTNUATR	ATTENUATOR
AUX or AUXIL	AUXILIARY
AVE	AVENUE
AWG	AMERICAN WIRE GAUGE
AWS	AMERICAN WELDING SOCIETY
B to B	BACK TO BACK
BASC	BASCULE
BBL	BARREL
BC	BOTTLE CAP or BOLT CIRCLE
B/C	BACK OF CURB
BCCMP	BITUMINOUS COATED CORRUGATED METAL PIPE CULVERT
BCPA	BITUMINOUS COATED PIPE ARCH CULVERT
BCPCMP	BITUMINOUS COATED AND PAVED CORRUGATED METAL PIPE CULVERT
BCPPA	BITUMINOUS COATED AND PAVED PIPE ARCH CULVERT
BCT	BREAKAWAY CABLE TERMINAL
BE	BURRIED ELECTRIC
BEG	BEGIN
BIT	BITUMINOUS
BK	BACK
BL	BASE LINE
BLDG	BUILDING
BLKHD	BULKHEAD
BLVD	BOULEVARD
BM	BENCH MARK
BOR	BORDER
BOT	BOTTOM
BP	BORROW PIT
BR	BRIDGE
BRG	BEARING
BRKWY	BREAKAWAY
BT	BURRIED TELEPHONE CABLE or DUCT
BTFLY	BUTTERFLY
BW	BARBED WIRE or BOTTOM WIDTH
C	CANTILEVER LENGTH, CENTIGRADE, CELSIUS, CUT or COLORLESS
C & G	CURB AND GUTTER
CA	COURSE AGGREGATE
CAP	CAPACITY or CORRUGATED ALUMINUM PIPE
CAPS	CAPITAL LETTERS
CATV	CABLE TELEVISION
CB	CATCH BASIN
CBC	CONCRETE BOX CULVERT
CBS	CONCRETE BOX STRUCTURE
CC, C/C, or C to C	CENTER TO CENTER
CCEW	CENTER TO CENTER EACH WAY
CD	CROSS DRAIN or CANDELA
CEM	CEMENT
CEM'D	CEMENTED
CFS	CUBIC FEET PER SECOND
CH	CHANNEL
CH CH	CHANNEL CHANGE
CHG	CHANGEABLE
CI	CAST IRON
CIP	CAST IRON PIPE
CIPL	CAST IN PLACE
CKT	CIRCUIT
CL	CLEARANCE OR CENTER LINE
CM	CONCRETE MONUMENT or CENTIMETER
CMB	CONCRETE MEDIAN BARRIER
CMP	CORRUGATED METAL PIPE
CMPA	CORRUGATED METAL PIPE ARCH
CO	COUNTY or COMPANY
COL	COLUMN
COM	COMMERCIAL
COMP	COMPOSITE
CONC	CONCRETE
CONST	CONSTRUCT or CONSTRUCTION
CONTRL	CONTROLLER
CONT	CONTINUATION
CONTR	CONTRACTOR
COORD	COORDINATE
COR	CORNER
CORR	CORRUGATED
CP	CONCRETE PIPE
CPE	CORRUGATED POLYETHYLENE PIPE
CR	CONTROL RADIUS or COUNTY ROAD
CRA	CLEAR RECOVERY AREA
CRS	COURSE
CS	CURVE TO SPIRAL
CSE	COURSE
CSP	CORRUGATED STEEL PIPE
CT	CLEAR TRUNK
CTLVR	CANTILEVER
CTR	CENTER
CU	COPPER
CULV	CULVERT
CY	CUBIC YARD
CYL	CYLINDRICAL
CZ	CLEAR ZONE

D	DEGREE OF CURVATURE, DEPTH, DENSITY, DISTANCE, DIAMETER
DA	DRAINAGE AREA
DBI	DITCH BOTTOM INLET
DBL	DOUBLE
DCS	DEGREE OF CURVATURE (SPIRAL)
DD	DRY DENSITY
DDHV	DIRECTIONAL DESIGN HOUR TRAFFIC
DECEL	DECELERATION
DELIN	DELINEATORS
DEMOBL	DEMOBILIZATION
DEPT	DEPARTMENT
DET	DETOUR
DHV	DESIGN HOURLY VOLUME
DHW	DESIGN HIGH WATER
DIP	DUCTILE IRON PIPE
DT	DITCH
DI	DROP INLET
DIA or D	DIAMETER
DIM	DIMENSION
DISP	DISPOSAL
DOT	DEPARTMENT OF TRANSPORTATION
DPI	DITCH POINT INTERSECTION
DR	DRAIN, DRIVE or DESIGN REVIEW
DRIV	DRIVEN
DRWY	DRIVEWAY
DS	DESIGN SPEED
DSL	DESIGN SERVICE LIFE
DTOE	DISTRICT TRAFFIC OPERATIONS ENGINEER
DWG	DRAWING
E	EAST or EXTERNAL DISTANCE
e	RATE OF SUPERELEVATION
E to E	END TO END
EA	EACH
EB	EASTBOUND
EL OR ELEV	ELEVATION
ELAST	ELASTOMERIC
ELEC	ELECTRIC
ELLIP	ELLIPTICAL
EMBK	EMBANKMENT
EMUL	EMULSIFIED
ENCL	ENCLOSURE
ENGR	ENGINEER
EOS	END OF SURVEY or EQUIVALENT OPENING SIZE
EQ	EQUATION OR EQUAL
EQUIP	EQUIPMENT
ESMT	EASEMENT
EST or ESTM	ESTIMATE
ESTBLMNT	ESTABLISHMENT
ETC	ET CETERA (AND SO FORTH)
EW	ENDWALL
EXCAV or EXC	EXCAVATION
EXIST	EXISTING
EXP	EXPANSION
EXT	EXTENSION
F	FILL
F or FINAL	FINAL QUANTITY
F & I	FURNISH & INSTALL
F to F	FACE TO FACE
FA	FEDERAL AID or FINE AGGREGATE
FAC	FLORIDA ADMINISTRATIVE CODE
FAP	FEDERAL AID PROJECT
FC	FRICTION COURSE
FDN	FOUNDATION
FDOT	FLORIDA DEPARTMENT OF TRANSPORTATION
FE	FLOOR ELEVATION
FED	FEDERAL
FERT	FERTILIZER
FES	FLARED END SECTION
FETS	FLARED END TERMINAL SECTION
FH	FIRE HYDRANT
FHWA	FEDERAL HIGHWAY ADMINISTRATION
FIN	FINISH
FL	FLOW LINE or FLASH
FL or FLA	FLORIDA
FLEX	FLEXIBLE
FNQ	FUSE (TYPE SLOW BURN)
FPS	FEET PER SECOND
FR	FRAME
FRANG	FRANGIBLE
FREQ	FREQUENCY
FS	FAR SIDE
FT	FEET
FURN	FURNISH
FUT	FUTURE
G	GRAM
G or GALV	GALVANIZED
GA	GAUGE or GAGE
GA or GAL	GALLON
GAR	GARAGE
GD	GUTTER DRAIN
GIP	GALVANIZED IRON PIPE
GM	GAS MAIN
GP	GRADE POINT
GR	GRADE, GUARDRAIL or GRATE
GRD	GROUND
GTTR	GUTTER
H or HT	HEIGHT
HD	HEAD or HIGH DENSITY
HDWL	HEADWALL
HH	HEAVY HEX
HNDRL	HANDRAIL
HOA	HAND/OFF/AUTOMATIC
HORIZ	HORIZONTAL
HP	HIGH PRESSURE or HORSE POWER
HR	HOUR
HS	HIGH STRENGTH
HSE	HOUSE
HW	HIGH WATER
HWY	HIGHWAY
HYD	HYDRANT or HYDRAULIC
I	EXTERNAL ANGLE (DELTA)
ICHG	INTERCHANGE
IES	ILLUMINATING ENGINEERING SOCIETY
ID	INSIDE DIAMETER
IMC	INTERMEDIATE METAL CONDUIT
IN	INCH
INC	INCORPORATED or INCLUDING
INCL or INC	INCLUDED
IP	IRON PIPE
INSTL	INSTALL
ISECT	INTERSECTION
ITE	INSTITUTE OF TRANSPORTATION ENGINEERS

JB	JUNCTION BOX
JCT	JUNCTION
JT	JOINT
K	PEAK HOUR FACTOR
KIP	1000 POUNDS (FORCE)
KSI	KIPS PER SQUARE INCH
KV	KILOVOLT
KVA	KILOVOLT AMPERES
L	LENGTH or LENGTH OF CURVE
2L	TWO LANE
LA or L/A	LIMITED ACCESS
LAT	LATERAL or LATITUDE
LB	POUND
LBR	LIMEROCK BEARING RATIO
LC	LONG CHORD
LGTH	LENGTH
LIN	LINEAR
LMRK	LIMEROCK
LOC	LOCATION
LS	LENGTH OF SPIRAL
LT	LEFT
LTD	LIGHTED
LUM	LUMINAIRE
L/W	LIGHTWEIGHT
M	MASS, METER or MIDDLE ORDINATE LENGTH
MACH	MACHINE
MAINT	MAINTENANCE
MATL	MATERIAL
MAX	MAXIMUM
MB	MEDIAN BARRIER
MBM	THOUSAND (FEET) BOARD MEASURE
MED	MEDIAN
MEMB	MEMBER
MES	MITERED END SECTION
MESS	MESSAGE
MG	1000 GALLONS
MH	MANHOLE
MHW	MEAN HIGH WATER
MI	MILE
MID	MIDDLE
MIL	MILITARY (SPEC) or ONE THOUSANDTH OF AN INCH
MIN	MINIMUM
MISC	MISCELLANEOUS
MLW	MEAN LOW WATER
MM	MILIMETER
MOBL	MOBILIZATION
MOD	MODIFY or MODIFIED
MON	MONUMENT
MOT	MAINTENANCE OF TRAFFIC
MP	MILE POST
MPH	MILES PER HOUR
MSL	MEAN SEA LEVEL
MTD	MOUNTED
MUTCD	MANUAL ON UNIFORM TRAFFIC CONTROL DEVICES
N	NORTH
NA or N/A	NOT AVALABLE or NOT APPLICABLE
N & C	NAIL & (BOTTLE) CAP
NB	NORTHBOUND
NC	NATIONAL COURSE
NDCBU	NEIGHBORHOOD DELIVERY AND COLLECTION BOX UNIT
NE	NORTHEAST
NEMA	NATIONAL ELECTRICAL MANUFACTURERS ASSOCIATION
NGVD	NATIONAL GEODETIC VERTICAL DATUM of 1929
NGS	NATIONAL GEODETIC SURVEY
NHW	NORMAL HIGH WATER
NIC	NOT IN CONTRACT
NJ	NEW JERSEY
NO	NUMBER
NOM	NOMINAL
NORM	NORMAL
NS	NON STRESS, NOT SUITABLE or NEAR SIDE
NT	NON TRAFFIC
NTS	NOT TO SCALE
NW	NORTHWEST
O PASS	OVERPASS
O to O	OUT TO OUT
OA	OVERALL
OC	ON CENTER
OD	OUTSIDE DIAMETER
OE	OVERHEAD ELECTRIC
OH or OVHD	OVERHEAD
OPT	OPTION, OPTIONAL or OPTICALLY
OT	OVERHEAD TELEPHONE
OZ	OUNCE
P	PASSENGER CAR & LIGHT DELIVERY TRUCK
P or PLAN	PLAN QUANTITY
PAR	PARALLEL
PART	PARTICIPATION
PAVT	PAVEMENT
PC	POINT OF CURVATURE
PCBC	PRECAST CONCRETE BOX CULVERT
PCC	POINT OF COMPOUND CURVATURE or PLAIN CEMENT CONCRETE
PCE	PERMANENT CONSTRUCTION EASEMENT
PE	PROFESSIONAL ENGINEER
PED	PEDESTRIAN or PEDESTAL
PEN	PENETRATION
PG	PROFILE GRADE
PGL	PROFILE GRADE LINE
PH	PHASE
pH	MEASURE OF ACIDITY OR ALKALINITY
PI	POINT OF INTERSECTION
PK	PER CAP
PKG	PARKING
PL	PROPERTY LINE or PLATE
PM	12:00 NOON UNTIL 12:00 MIDNIGHT
POC	POINT ON CURVE
POST	POINT ON SEMI-TANGENT
POT	POINT ON TANGENT
PP	POWER POLE
PR	PAIR
PRC	POINT OF REVERSE CURVATURE
PRCST	PRECAST
PREST	PRESTRESSED
PROB	PROBABILITY
PROG	PROGRAMMED
PROJ	PROJECT or PROJECTION
PRM	PERMANENT REFERENCE MONUMENT
PROV	PROVISIONS
PRSE	PRESSURE
PS&E	PLANS, SPECIFICATIONS AND ESTIMATES
PSI	POUNDS PER SQUARE INCH
PT	POINT OF TANGENCY
P-TIME	PRE-TIMED
PVC	POLYVINYL CHLORIDE
PW	PRESSURE WATER

Q	PEAK DISCHARGE or FLOW VOLUME (CFS)
R or RAD	RADIUS
R or RNG	RANGE
RBAC	ROCK BASE ASPHALTIC CONCRETE
RBST	ROCK BASE SURFACE TREATMENT
RCP	REINFORCED CONCRETE PIPE
RCPA	REINFORCED CONCRETE PIPE ARCH
RD	ROAD or ROUND
RD-SD	ROADSIDE
RDWY	ROADWAY
REC	RECOVERY
RECT	RETICULINE or RECTANGULAR
REF	REFERENCE
REFL	REFLECTIVE
REINF	REINFORCED or REINFORCING
REJUV	REJUVENATION
RELOC	RELOCATED
REM	REMOVAL
REPL	REPLACE
REQ or REQD	REQUIRED
RES	RESIDENCE or RESIDENTIAL
RHW	INSULATION (MOISTURE & HEAT RESISTANT RUBBER)
RM	REFERENCE MONUMENT
RP	REFERENCE POINT
RPM	RAISED REFLECTIVE PAVEMENT MARKERS
RR	RAILROAD
RSF	RESURFACE
RT	RIGHT
R/W	RIGHT OF WAY
S	SPEED or SOUTH
SAHM	SAND-ASPHALT HOT MIX
SAN	SANITARY
SB	SOUTHBOUND
SBAC	SHELL BASE ASPHALTIC CONCRETE
SBRM	SAND BITUMINOUS ROAD MIX
SBST	SHELL BASE SURFACE TREATMENT
SC	SEAL COAT or SPIRAL TO CURVE
SCH	SCHEDULE
SCST	SAND-CLAY SURFACE TREATMENT
SD	SIDE DRAIN
SE	SOUTHEAST
SEC	SECOND
SECT	SECTION
SED	SEDIMENT
SEP	SEPARATOR
SEQ	SEQUENTIAL
SERV	SERVICE
SF	SHRINKAGE FACTOR
SG	SUBGRADE
SG or SP GR	SPECIFIC GRAVITY
SH or SHT	SHEET
SHLDR	SHOULDER
SHW	SEASONAL HIGH WATER
SPA	SPACE
SPCG or SP	SPACING
SPEC	SPECIFICATION
SQ FT or SF	SQUARE FOOT
SQ IN	SQUARE INCH
SQ YD OR SY	SQUARE YARD
SR	STATE ROAD
SS	STORM SEWER
SSMD	SOLID STATE MODULAR DESIGN
ST	STREET, SURFACE TREATMENT or SPIRAL TO TANGENT
STA	STATION
STAB	STABILITY or STABILIZATION
STD	STANDARD
STG	STRONG
STL	STEEL
STR	STRUCTURE
STY	STORY
SU	SINGLE UNIT TRUCKS
SUB or SUBS	SUBSOIL
SUBGR	SUBGRADE
SUPPTS	SUPPORTS
SUR	SURVEY
SURF	SURFACE
SW	SOUTHWEST
SW or SWK	SIDEWALK
SYST	SYSTEM
	PERCENT TRUCKS
T or TAN	TANGENT LENGTH CURVE or THICKNESS
T or TWP	TOWNSHIP
TBM	TEMPORARY BENCH MARK
TC	TANGENT TO CURVE
TCB	TEMPORARY CONCRETE BARRIER
TCE	TEMPORARY CONSTRUCTION EASEMENT
TCP	TERRA COTTA PIPE
TCZ	TRAFFIC CONTROL ZONE
TEL	TELEPHONE
TEMP	TEMPERATURE or TEMPORARY
TF or TRAF	TRAFFIC
THEO	THEORETICAL
THRMPLSTC	THERMOPLASTIC
THW or THWN	INSULATION (FLAME RETARDANT, MOISTURE AND HEAT RESISTANT THERMOPLASTIC)
TK or THICK	THICKNESS
TN	TON
TRANS	TRANSITION, TRANSVERSE OR TRANSITE
TREAT	TREATMENT
TS	TANGENT TO SPIRAL
TSC	LENGTH OF TANGENT (SPIRAL CURVE
TYP	TYPICAL
U PASS	UNDERPASS
UG or UNDGRD	UNDERGROUND
UL	UNDERWRITERS LABORATORIES
UNDDR	UNDERDRAINS
UNDRDWY	UNDERROADWAY
UNL	UNLOADED
UNTR	UNTREATED
USC&GS	US COAST AND GEODETIC SURVEY (NO NATIONAL GEODETIC SURVEY)
USF	UNIVERSITY OF SOUTH FLORIDA
USGS	US GEOLOGICAL SURVEY
USPS	UNITED STATES POSTAL SERVICE
UTIL	UTILITIES

	VOLT, VELOCITY or VOLUME
VAR	VARIABLE
VC	VERTICAL CURVE
VCP	VITRIFIED CLAY PIPE
VEH	VEHICLE
VERT	VERTICAL
VF	VERTICAL FOOT
Vh	VERIFIED HORIZONTAL LOCATION
VMS	VARIABLE MESSAGE SIGN
VOL	VOLUME
VP	VERTICAL PANEL
VPD	VEHICLES PER DAY
VRMS	VOLTS ROOT MEAN SQUARE
Vv	VARIFIED VERTICAL ELEVATION
Vvh	VARIFIED VERTICAL ELEVATION AND HORIZONTAL LOCATION
VW	VARIABLE WIDTH
W	WIDTH or WEST
W/C	WATER-CEMENT RATIO
WB	WESTBOUND
WB40	INTERMEDIATE SEMI TRAILER (40' WB)
WB50	LARGE SEMI TRAILER (50' WB)
WB60	TANDUM SEMI TRAILER (60' WB)
WM	WATER MAIN
W.P.I.	WORK PROGRAM ITEM
WT	WATER TABLE OR WEIGHT
WWF	WELDED WIRE FABRIC
X	COORDINATE DISTANCE (EAST-WEST) or EXTRA
X RD	CROSS ROAD
XING	CROSSING
XSEC	CROSS SECTION
Y	COORDINATE DISTANCE (NORTH-SOUTH
YR	YEAR

UNITS OF MEASURE

AC	ACRE	LU	PER LUMINAIRE
AS	ASSEMBLY	MG	THOUSAND GALLONS
BA	BARREL	NM	NET MILE
BU	BUSHEL	PB	PER BUILDING
CF	CUBIC FT.	PC	PER CLUSTER
CO	PER CLEANOUT	PE	PILE
CY	CUBIC YARD	PI	PER INTERSECTION
CW	CWT	PJ	PER JOINT
DA	DAYS	PL	PLANT
EA	EACH	PO	POST
MB	(MBM) 1000 BOARD MEASURE	PP	PER POLE
FT	FOOT	PW	PER WELL
GA	GALLON	RM	ROAD MILE
GM	GROSS MILE	SF	SQUARE FOOT
LB	POUND	SP	SPAN
LF	LINEAR FOOT	SY	SQUARE YARD
LS	LUMP SUM	TN	TON
ED	PER EACH PER DAY	VF	VERTICAL FOOT

STANDARD SYMBOLS

EXISTING SYMBOLS MAY DIFFER; SEE EXISTING CONDITIONS PLAN LEGEND

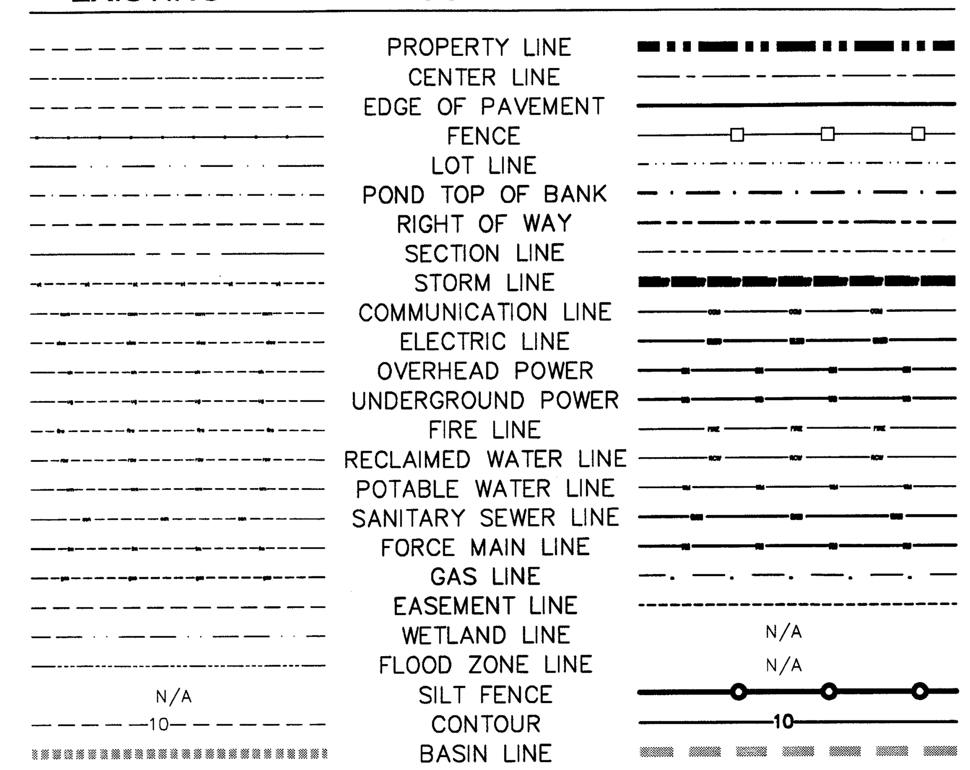

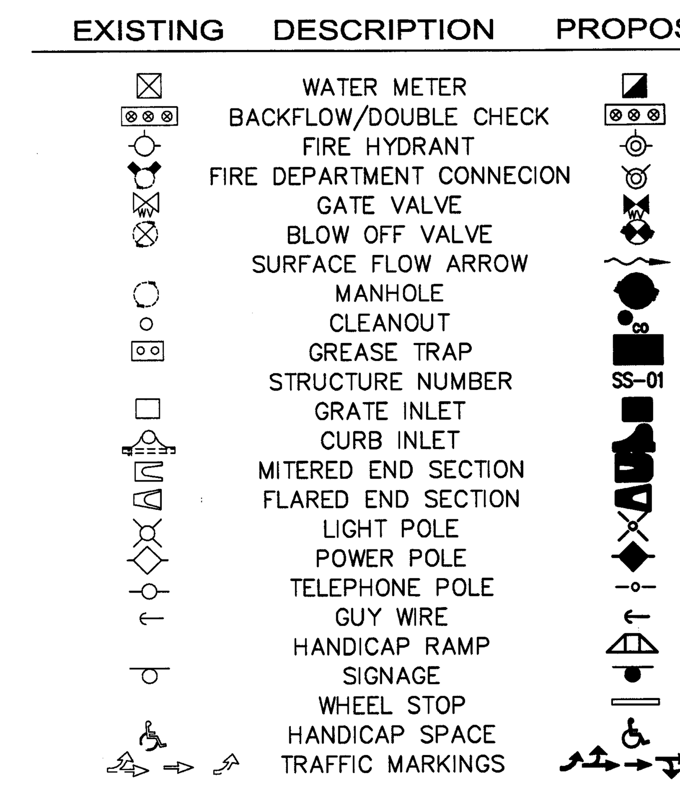

SYM.	ZONE	DESCRIPTION	DATE	APPROVED
REVISIONS				

URS
7650 West Courtney Campbell Causeway
Suite 700
Tampa, Florida 33607
Ph: (813) 286-1711 Fax: (813) 286-6587
Florida Engineering Number: 000002

SIGNATURES		DATE
DRAWN	CAB	9/24/12
CHECKED	JWG	9/24/12
SUBMITTED	VICKI M. HARTMAN	9/24/12
ST OF LICENSURE: FL		
LICENSE NO.: 54611		
APPROVED	F. WALKER	9/24/12
	S. MEHTA	9/25/12

NATIONAL AERONAUTICS AND SPACE ADMINISTRATION
JOHN F. KENNEDY SPACE CENTER, NASA
KENNEDY SPACE CENTER, FLORIDA

REVITALIZE MEDIUM VOLTAGE ELECTRICAL DISTRIBUTION SYSTEMS, INDUSTRIAL AND PAYLOAD PROCESSING AREAS

STANDARD ABBREVIATIONS AND SYMBOLS

FILE NO.	SIZE	DWG. NO.
	F	79K39135
PCN NO. 98860		SHEET 10

C-002

NOTICE – WHEN GOVERNMENT DRAWINGS, SPECIFICATIONS, OR OTHER DATA ARE USED FOR ANY PURPOSE OTHER THAN IN CONNECTION WITH A DEFINITELY RELATED GOVERNMENT PROCUREMENT OPERATION, THE UNITED STATES GOVERNMENT THEREBY INCURS NO RESPONSIBILITY NOR ANY OBLIGATION WHATSOEVER; AND THE FACT THAT THE GOVERNMENT MAY HAVE FORMULATED, FURNISHED, OR IN ANY WAY SUPPLIED THE SAID DRAWINGS, SPECIFICATIONS, OR OTHER DATA IS NOT TO BE REGARDED BY IMPLICATION OR OTHERWISE AS IN ANY MANNER LICENSING THE HOLDER OR ANY OTHER PERSON OR CORPORATION, OR CONVEYING ANY RIGHTS OR PERMISSION TO MANUFACTURE, USE, OR SELL ANY PATENTED INVENTION THAT MAY IN ANY WAY BE RELATED THERETO.

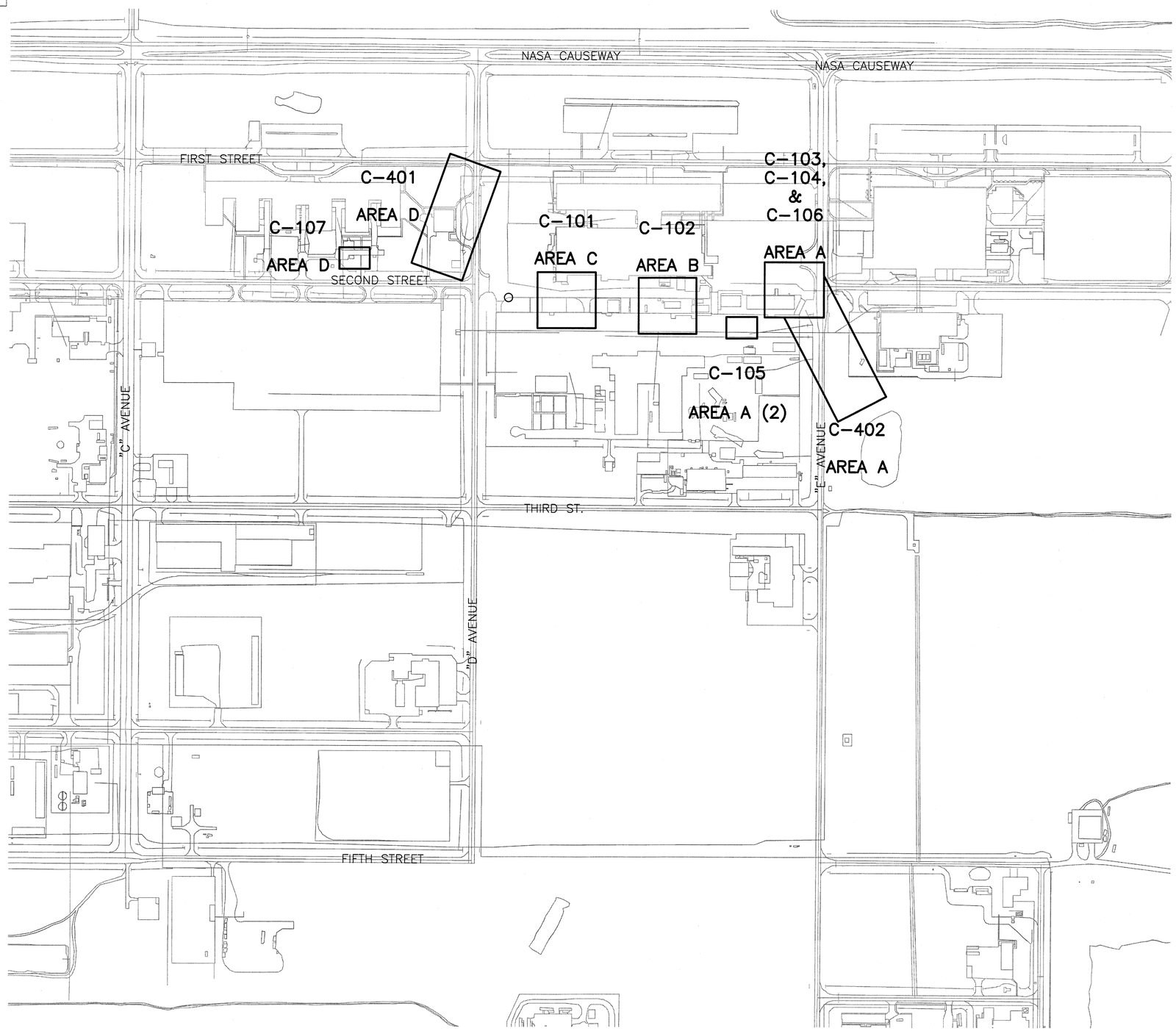

N

GRAPHIC SCALE

200' 0 100' 200'

SCALE: 1" = 200'

SITE BREAKOUT PLAN

SCALE 1" = 200'

SYM.	ZONE	DESCRIPTION	DATE	APPROVED
		REVISIONS		

URS
7650 West Courtney Campbell Causeway
Suite 700
Tampa, Florida 33607
Ph: (813) 286-1711 Fax: (813) 286-6587
Florida Engineering Number: 000002

SIGNATURES		DATE
DRAWN	CAB	9/24/12
CHECKED	JWG	9/24/12
SUBMITTED	VICKI M. HARTMAN	9/24/12
ST OF LICENSURE: FL		
LICENSE NO.: 54611		
APPROVED	F. WALKER	9/25/12
	S. MEHTA	9/25/12

NATIONAL AERONAUTICS AND SPACE ADMINISTRATION
JOHN F. KENNEDY SPACE CENTER, NASA
KENNEDY SPACE CENTER, FLORIDA

REVITALIZE MEDIUM VOLTAGE
ELECTRICAL DISTRIBUTION SYSTEMS,
INDUSTRIAL AND PAYLOAD PROCESSING AREAS

SITE BREAKOUT PLAN

FILE NO.	SIZE	DWG. NO.
	F	79K39135
PCN NO. 98860		SHEET 11

C-100

F:\NASA KSC\Tom KC \Drawings\C-100 SITE BREAKOUT PLAN.dwg 09/25/2012 1:400

KSC FORM 1-11A (REV 6/91) (C/G 12/93)

NOTICE – WHEN GOVERNMENT DRAWINGS, SPECIFICATIONS, OR OTHER DATA ARE USED FOR ANY PURPOSE OTHER THAN IN CONNECTION WITH A DEFINITELY RELATED GOVERNMENT PROCUREMENT OPERATION, THE UNITED STATES GOVERNMENT THEREBY INCURS NO RESPONSIBILITY NOR ANY OBLIGATION WHATSOEVER; AND THE FACT THAT THE GOVERNMENT MAY HAVE FORMULATED, FURNISHED, OR IN ANY WAY SUPPLIED THE SAID DRAWINGS, SPECIFICATIONS, OR OTHER DATA IS NOT TO BE REGARDED BY IMPLICATION OR OTHERWISE AS IN ANY MANNER LICENSING THE HOLDER OR ANY OTHER PERSON OR CORPORATION, OR CONVEYING ANY RIGHTS OR PERMISSION TO MANUFACTURE, USE, OR SELL ANY PATENTED INVENTION THAT MAY IN ANY WAY BE RELATED THERETO.

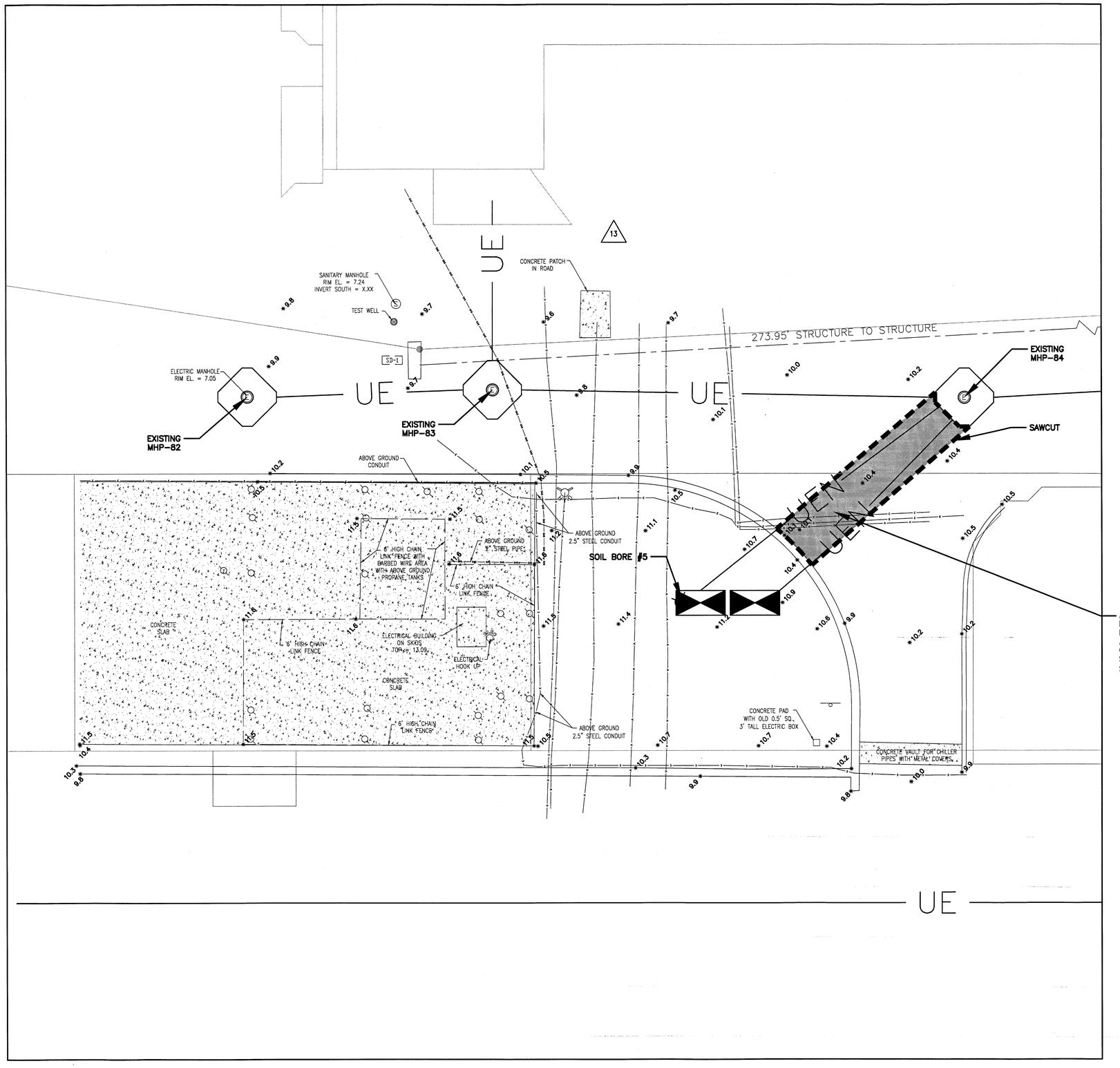

N

GRAPHIC SCALE

10' 0 5' 10'

SCALE: 1" = 10'

SPECIFIC NOTES:

A. REFER TO DWG. C-001 FOR GENERAL NOTES.

NOTE:
CONTRACTOR SHALL PROVIDE EROSION CONTROL/SILT FENCE AT ALL STORM SEWER STRUCTURES LOCATED WITHIN AND IMMEDIATELY DOWNSTREAM OF THE PROJECT WORK AREAS. REFER TO DETAIL SHEET C-501.

SITE PLAN – AREA C

SCALE 1" = 10' – 0"

C-101

SYM.	ZONE	DESCRIPTION	DATE	APPROVED
		REVISIONS		

URS

7650 West Courtney Campbell Causeway
Suite 700
Tampa, Florida 33607
Ph: (813) 286-1711 Fax: (813) 286-6587
Florida Engineering Number: 000002

SIGNATURES		DATE
DRAWN	CAB	9/24/12
CHECKED	JWG	9/24/12
SUBMITTED	VICKI M. HARTMAN	9/24/12
ST OF LICENSURE: FL		
LICENSE NO.: 54611		
APPROVED	F. WALKER	9/24/12
	S. MEHTA	9/25/12

NATIONAL AERONAUTICS AND SPACE ADMINISTRATION
JOHN F. KENNEDY SPACE CENTER, NASA
KENNEDY SPACE CENTER, FLORIDA

REVITALIZE MEDIUM VOLTAGE ELECTRICAL DISTRIBUTION SYSTEMS, INDUSTRIAL AND PAYLOAD PROCESSING AREAS

SITE PLAN – AREA C

FILE NO.	SIZE	DWG. NO.
	F	79K39135
PCN NO. 98860		SHEET 12

FLVMSA KSC\Tom Rc \\Drawings\SITE PLAN base.dwg 09/25/2012 15:50

KSC FORM 1-11A (REV 6/91) (C/G 12/93)

NOTICE – WHEN GOVERNMENT DRAWINGS, SPECIFICATIONS, OR OTHER DATA ARE USED FOR ANY PURPOSE OTHER THAN IN CONNECTION WITH A DEFINITELY-RELATED GOVERNMENT PROCUREMENT OPERATION, THE UNITED STATES GOVERNMENT THEREBY INCURS NO RESPONSIBILITY NOR ANY OBLIGATION WHATSOEVER; AND THE FACT THAT THE GOVERNMENT MAY HAVE FORMULATED, FURNISHED, OR IN ANY WAY SUPPLIED THE SAID DRAWINGS, SPECIFICATIONS OR OTHER DATA, IS NOT TO BE REGARDED BY IMPLICATION OR OTHERWISE AS IN ANY MANNER LICENSING THE HOLDER OR ANY OTHER PERSON OR CORPORATION, OR CONVEYING ANY RIGHTS OR PERMISSION TO MANUFACTURE, USE OR SELL ANY PATENTED INVENTION THAT MAY IN ANY WAY BE RELATED THERETO.

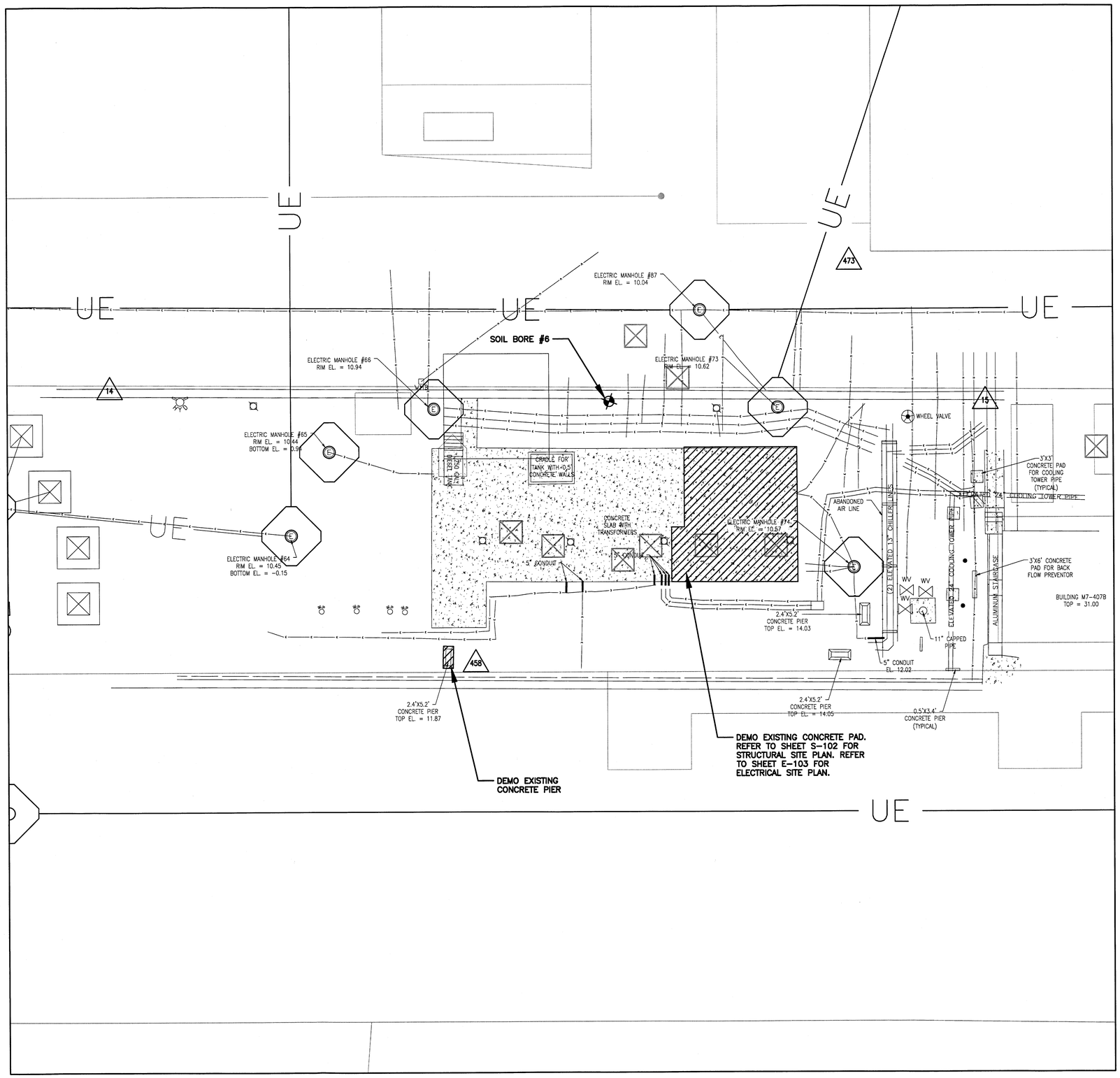

DEMOLITION PLAN – AREA B

SCALE 1" = 10' – 0"

N

GRAPHIC SCALE

10' 0 5' 10'

SCALE: 1" = 10'

SPECIFIC NOTES:

A. REFER TO DWG. C-001 FOR GENERAL NOTES.

NOTE:
CONTRACTOR SHALL PROVIDE EROSION CONTROL/SILT FENCE AT ALL STORM SEWER STRUCTURES LOCATED WITHIN AND IMMEDIATELY DOWNSTREAM OF THE PROJECT WORK AREAS. REFER TO DETAIL SHEET C-501.

SYM.	ZONE	DESCRIPTION	DATE	APPROVED
		REVISIONS		

URS
7650 West Courtney Campbell Causeway
Suite 700
Tampa, Florida 33607
Ph: (813) 286-1711 Fax: (813) 286-6587
Florida Engineering Number: 000002

SIGNATURES		DATE
DRAWN	CAB	9/24/12
CHECKED	JWG	9/24/12
SUBMITTED	VICKI M. HARTMAN	9/24/12
ST OF LICENSURE: FL		
LICENSE NO.: 54611		
APPROVED	F. WALKER	9/24/12
	S. MEHTA	9/25/12

NATIONAL AERONAUTICS AND SPACE ADMINISTRATION
JOHN F. KENNEDY SPACE CENTER, NASA
KENNEDY SPACE CENTER, FLORIDA

REVITALIZE MEDIUM VOLTAGE
ELECTRICAL DISTRIBUTION SYSTEMS,
INDUSTRIAL AND PAYLOAD PROCESSING AREAS

DEMOLITION PLAN – AREA B

FILE NO.	SIZE	DWG. NO.
	F	79K39135
PCN NO. 98860		SHEET 13

C-102

T:\NASA KSC\Task No. 1\Drawings\SITE PLAN base.dwg 09/25/2012 14:00

KSC FORM 1-11A (REV 8/91) (C/G 12/93)

NOTICE — WHEN GOVERNMENT DRAWINGS, SPECIFICATIONS, OR OTHER DATA ARE USED FOR ANY PURPOSE OTHER THAN IN CONNECTION WITH A DEFINITELY RELATED GOVERNMENT PROCUREMENT OPERATION, THE UNITED STATES GOVERNMENT THEREBY INCURS NO RESPONSIBILITY NOR ANY OBLIGATION WHATSOEVER; AND THE FACT THAT GOVERNMENT MAY HAVE FORMULATED, FURNISHED, OR IN ANY WAY SUPPLIED THE SAID DRAWINGS, SPECIFICATIONS, OR OTHER DATA IS NOT TO BE REGARDED BY IMPLICATION OR OTHERWISE AS IN ANY MANNER LICENSING THE HOLDER OR ANY OTHER PERSON OR CORPORATION, OR CONVEYING ANY RIGHTS OR PERMISSION TO MANUFACTURE, USE, OR SELL ANY PATENTED INVENTION THAT MAY IN ANY WAY BE RELATED THERETO.

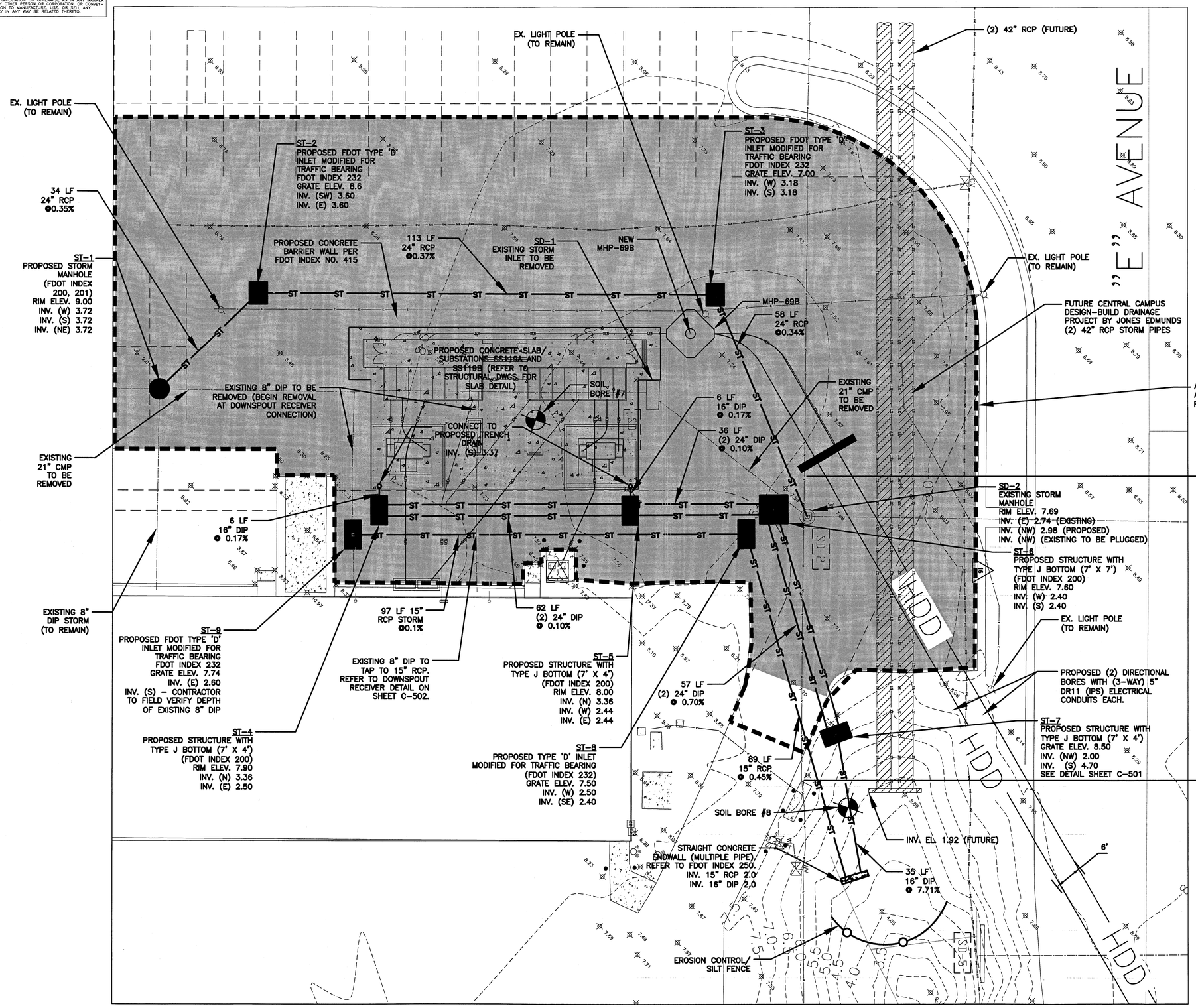

SITE PLAN – AREA A

SCALE 1" = 10' – 0"

MATCH AREA A
REFER TO DWG. C-402
FOR CONTINUATION

N

GRAPHIC SCALE
10' 0 5' 10'
SCALE: 1" = 10'

SPECIFIC NOTES:

A. REFER TO DWG. C-001 FOR GENERAL NOTES.

NOTE:
CONTRACTOR SHALL PROVIDE EROSION CONTROL/SILT FENCE AT ALL STORM SEWER STRUCTURES LOCATED WITHIN AND IMMEDIATELY DOWNSTREAM OF THE PROJECT WORK AREAS. REFER TO DETAIL SHEET C-501.

SYM.	ZONE	DESCRIPTION	DATE	APPROVED
		REVISIONS		

URS
7650 West Courtney Campbell Causeway
Suite 700
Tampa, Florida 33607
Ph: (813) 286-1711 Fax: (813) 286-6587
Florida Engineering Number: 000002

SIGNATURES		DATE
DRAWN	CAB	9/24/12
CHECKED	JWG	9/24/12
SUBMITTED	VICKI M. HARTMAN	9/24/12
ST OF LICENSURE: FL		
LICENSE NO.: 54611		
APPROVED	F. WALKER	9/24/12
	S. MEHTA	9/25/12

NATIONAL AERONAUTICS AND SPACE ADMINISTRATION
JOHN F. KENNEDY SPACE CENTER, NASA
KENNEDY SPACE CENTER, FLORIDA

REVITALIZE MEDIUM VOLTAGE ELECTRICAL DISTRIBUTION SYSTEMS, INDUSTRIAL AND PAYLOAD PROCESSING AREAS

SITE PLAN – AREA A

FILE NO.	SIZE	DWG. NO.
	F	79K39135
PCN NO. 98860		SHEET 14

C-103

KSC FORM 1-11A (REV 6/91) (C/G 12/93)

T:\NASA KSC\Tom KC, I\Drawings\SITE PLAN base.dwg 09/25/2012 15:50

NOTICE – WHEN GOVERNMENT DRAWINGS, SPECIFICATIONS, OR OTHER DATA ARE USED FOR ANY PURPOSE OTHER THAN IN CONNECTION WITH A DEFINITELY RELATED GOVERNMENT PROCUREMENT OPERATION, THE UNITED STATES GOVERNMENT THEREBY INCURS NO RESPONSIBILITY NOR ANY OBLIGATION WHATSOEVER; AND THE FACT THAT THE GOVERNMENT MAY HAVE FORMULATED, FURNISHED, OR IN ANY WAY SUPPLIED THE SAID DRAWINGS, SPECIFICATIONS, OR OTHER DATA IS NOT TO BE REGARDED BY IMPLICATION OR OTHERWISE AS IN ANY MANNER LICENSING THE HOLDER OR ANY OTHER PERSON OR CORPORATION, OR CONVEYING ANY RIGHTS OR PERMISSION TO MANUFACTURE, USE, OR SELL ANY PATENTED INVENTION THAT MAY IN ANY WAY BE RELATED THERETO.

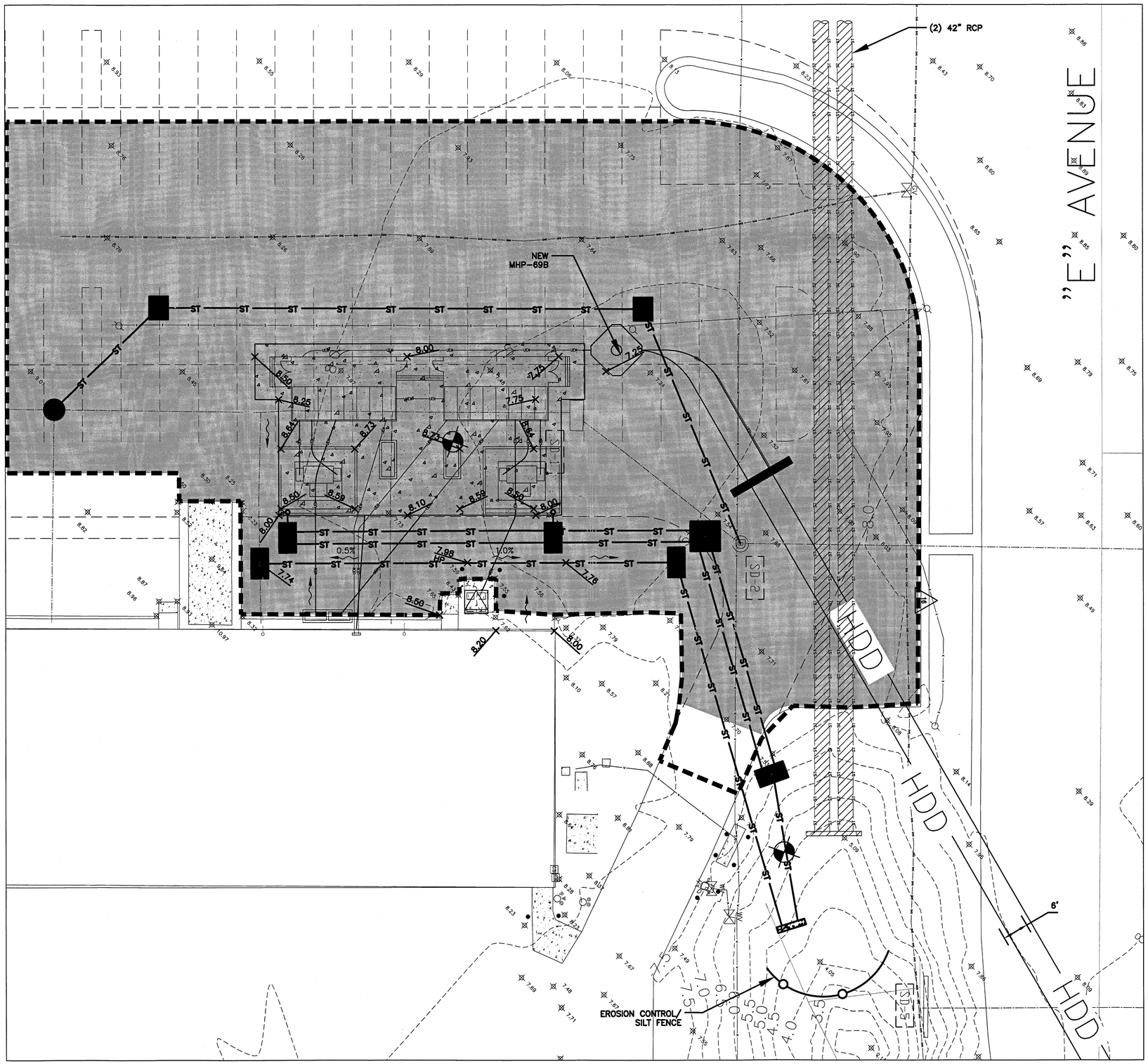

N

GRAPHIC SCALE
10' 0 5' 10'
SCALE: 1" = 10'

SPECIFIC NOTES:

A. REFER TO DWG. C-001 FOR GENERAL NOTES.
B. PROPOSED SPOT ELEVATIONS REPRESENT EDGE OF PAVEMENT OR GROUND SURFACE GRADE UNLESS OTHERWISE NOTED.

LEGEND

EXISTING SPOT ELEVATION

PROPOSED SPOT ELEVATION

NOTE:
CONTRACTOR SHALL PROVIDE EROSION CONTROL/SILT FENCE AT ALL STORM SEWER STRUCTURES LOCATED WITHIN AND IMMEDIATELY DOWNSTREAM OF THE PROJECT WORK AREAS. REFER TO DETAIL SHEET C-501.

GRADING PLAN – AREA A

SCALE 1" = 10' – 0"

MATCH AREA A
REFER TO DWG. C-402
FOR CONTINUATION

C-104

SYM.	ZONE	DESCRIPTION	DATE	APPROVED
		REVISIONS		

URS
7650 West Courtney Campbell Causeway
Suite 700
Tampa, Florida 33607
Ph: (813) 286-1711 Fax: (813) 286-6587
Florida Engineering Number: 000002

SIGNATURES		DATE
DRAWN	CAB	9/24/12
CHECKED	JWG	9/24/12
SUBMITTED	VICKI M. HARTMAN	9/24/12
ST OF LICENSURE: FL		
LICENSE NO.: 54611		
APPROVED	F. WALKER	9/24/12
	S. MEHTA	9/25/12

NATIONAL AERONAUTICS AND SPACE ADMINISTRATION
JOHN F. KENNEDY SPACE CENTER, NASA
KENNEDY SPACE CENTER, FLORIDA

REVITALIZE MEDIUM VOLTAGE
ELECTRICAL DISTRIBUTION SYSTEMS,
INDUSTRIAL AND PAYLOAD PROCESSING AREAS

GRADING PLAN – AREA A

FILE NO.	SIZE	DWG. NO.
	F	79K39135
PCN NO. 98860		SHEET 15

T:\NASA KSC\Task No. 1\Drawings\SITE PLAN base.dwg 09/25/2012 15:53

KSC FORM 1-11A (REV 6/91) (C/G 12/93)

NOTICE - WHEN GOVERNMENT DRAWINGS, SPECIFICATIONS, OR OTHER DATA ARE USED FOR ANY PURPOSE OTHER THAN IN CONNECTION WITH A DEFINITELY RELATED GOVERNMENT PROCUREMENT OPERATION, THE UNITED STATES GOVERNMENT THEREBY INCURS NO RESPONSIBILITY NOR ANY OBLIGATION WHATSOEVER; AND THE FACT THAT THE GOVERNMENT MAY HAVE FORMULATED, FURNISHED, OR IN ANY WAY SUPPLIED THE SAID DRAWINGS, SPECIFICATIONS, OR OTHER DATA IS NOT TO BE REGARDED BY IMPLICATION OR OTHERWISE AS IN ANY MANNER LICENSING THE HOLDER OR ANY OTHER PERSON OR CORPORATION, OR CONVEYING ANY RIGHTS OR PERMISSION TO MANUFACTURE, USE, OR SELL ANY PATENTED INVENTION THAT MAY IN ANY WAY BE RELATED THERETO.

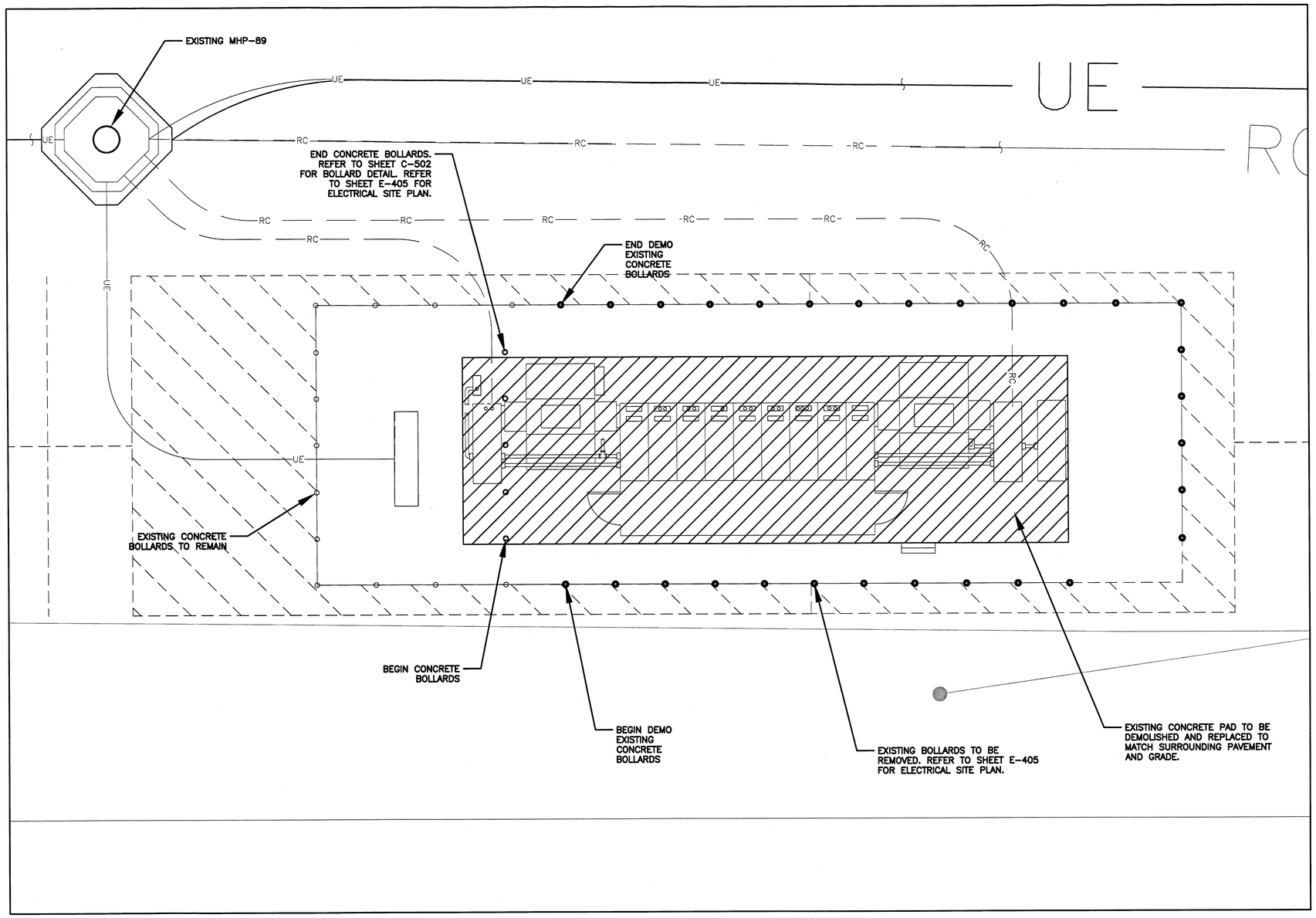

DEMOLITION PLAN – AREA A (2)

SCALE 1" = 5' – 0"

N

GRAPHIC SCALE

5' 0 2.5' 5'

SCALE: 1" = 5'

SPECIFIC NOTES:

A. REFER TO DWG. C-001 FOR GENERAL NOTES.

NOTE:
CONTRACTOR SHALL PROVIDE EROSION CONTROL/SILT FENCE AT ALL STORM SEWER STRUCTURES LOCATED WITHIN AND IMMEDIATELY DOWNSTREAM OF THE PROJECT WORK AREAS. REFER TO DETAIL SHEET C-501.

SYM.	ZONE	DESCRIPTION	DATE	APPROVED
		REVISIONS		

URS
7650 West Courtney Campbell Causeway
Suite 700
Tampa, Florida 33607
Ph: (813) 286-1711 Fax: (813) 286-6587
Florida Engineering Number: 000002

SIGNATURES		DATE
DRAWN	CAB	9/24/12
CHECKED	JWG	9/24/12
SUBMITTED	VICKI M. HARTMAN	9/24/12
ST OF LICENSURE: FL LICENSE NO.: 54611		
APPROVED	F. WALKER	9/24/12
	S. MEHTA	9/25/12

NATIONAL AERONAUTICS AND SPACE ADMINISTRATION
JOHN F. KENNEDY SPACE CENTER, NASA
KENNEDY SPACE CENTER, FLORIDA

REVITALIZE MEDIUM VOLTAGE ELECTRICAL DISTRIBUTION SYSTEMS, INDUSTRIAL AND PAYLOAD PROCESSING AREAS

DEMOLITION PLAN – AREA A (2)

FILE NO.	SIZE	DWG. NO.
	F	79K39135
PCN NO. 98860		SHEET 16

C-105

FL:\NASA KSC\Task No. 1\Drawings\SITE PLAN base.dwg 09/25/2012 15:54
KSC FORM 1-11A (REV 6/91) (C/O 12/93)

NOTICE – WHEN GOVERNMENT DRAWINGS, SPECIFICATIONS, OR OTHER DATA ARE USED FOR ANY PURPOSE OTHER THAN IN CONNECTION WITH A DEFINITELY RELATED GOVERNMENT PROCUREMENT OPERATION, THE UNITED STATES GOVERNMENT THEREBY INCURS NO RESPONSIBILITY NOR ANY OBLIGATION WHATSOEVER; AND THE FACT THAT THE GOVERNMENT MAY HAVE FORMULATED, FURNISHED, OR IN ANY WAY SUPPLIED THE SAID DRAWINGS, SPECIFICATIONS, OR OTHER DATA IS NOT TO BE REGARDED BY IMPLICATION OR OTHERWISE AS IN ANY MANNER LICENSING THE HOLDER OR ANY OTHER PERSON OR CORPORATION, OR CONVEYING ANY RIGHTS OR PERMISSION TO MANUFACTURE, USE, OR SELL ANY PATENTED INVENTION THAT MAY IN ANY WAY BE RELATED THERETO.

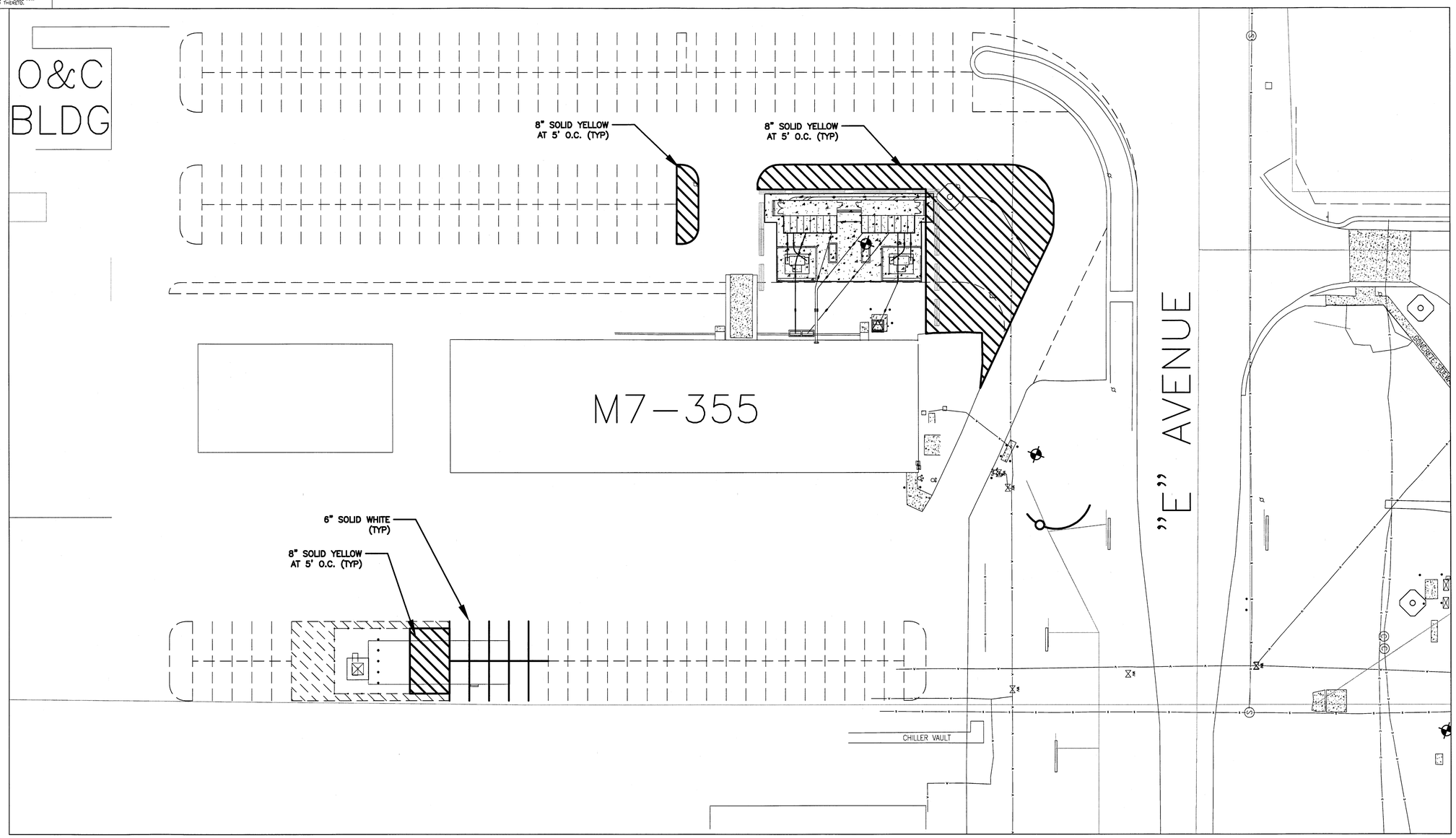

STRIPING PLAN – AREA A

SCALE 1" = 20' – 0"

NOTE:
CONTRACTOR SHALL PROVIDE EROSION CONTROL/SILT FENCE AT ALL STORM SEWER STRUCTURES LOCATED WITHIN AND IMMEDIATELY DOWNSTREAM OF THE PROJECT WORK AREAS. REFER TO DETAIL SHEET C-501.

SYM.	ZONE	DESCRIPTION	DATE	APPROVED
		REVISIONS		

URS
7650 West Courtney Campbell Causeway
Suite 700
Tampa, Florida 33607
Ph: (813) 286-1711 Fax: (813) 286-6587
Florida Engineering Number: 000002

SIGNATURES		DATE
DRAWN	CAB	9/24/12
CHECKED	JWG	9/24/12
SUBMITTED	VICKI M. HARTMAN	9/24/12
ST OF LICENSURE: FL		
LICENSE NO.: 54611		
APPROVED	F. WALKER	9/25/12
	S. MEHTA	9/25/12

NATIONAL AERONAUTICS AND SPACE ADMINISTRATION
JOHN F. KENNEDY SPACE CENTER, NASA
KENNEDY SPACE CENTER, FLORIDA

REVITALIZE MEDIUM VOLTAGE ELECTRICAL DISTRIBUTION SYSTEMS, INDUSTRIAL AND PAYLOAD PROCESSING AREAS

STRIPING PLAN – AREA A

C-106

FILE NO.	SIZE	DWG. NO.
	F	79K39135
PCN NO. 98860		SHEET 17

T:\NASA KSC\Task 60_1\Drawings\SITE PLAN base.dwg 09/20/2012 14:00

KSC FORM 1-11A (REV 6/91) (C/G 12/93)

NOTICE – WHEN GOVERNMENT DRAWINGS, SPECIFICATIONS, OR OTHER DATA ARE USED FOR ANY PURPOSE OTHER THAN IN CONNECTION WITH A DEFINITELY RELATED GOVERNMENT PROCUREMENT OPERATION, THE UNITED STATES GOVERNMENT THEREBY INCURS NO RESPONSIBILITY NOR ANY OBLIGATION WHATSOEVER; AND THE FACT THAT THE GOVERNMENT MAY HAVE FORMULATED, FURNISHED, OR IN ANY WAY SUPPLIED THE SAID DRAWINGS, SPECIFICATIONS, OR OTHER DATA, IS NOT TO BE REGARDED BY IMPLICATION OR OTHERWISE AS IN ANY MANNER LICENSING THE HOLDER OR ANY OTHER PERSON OR CORPORATION, OR CONVEYING ANY RIGHTS OR PERMISSION TO MANUFACTURE, USE, OR SELL ANY PATENTED INVENTION THAT MAY IN ANY WAY BE RELATED THERETO.

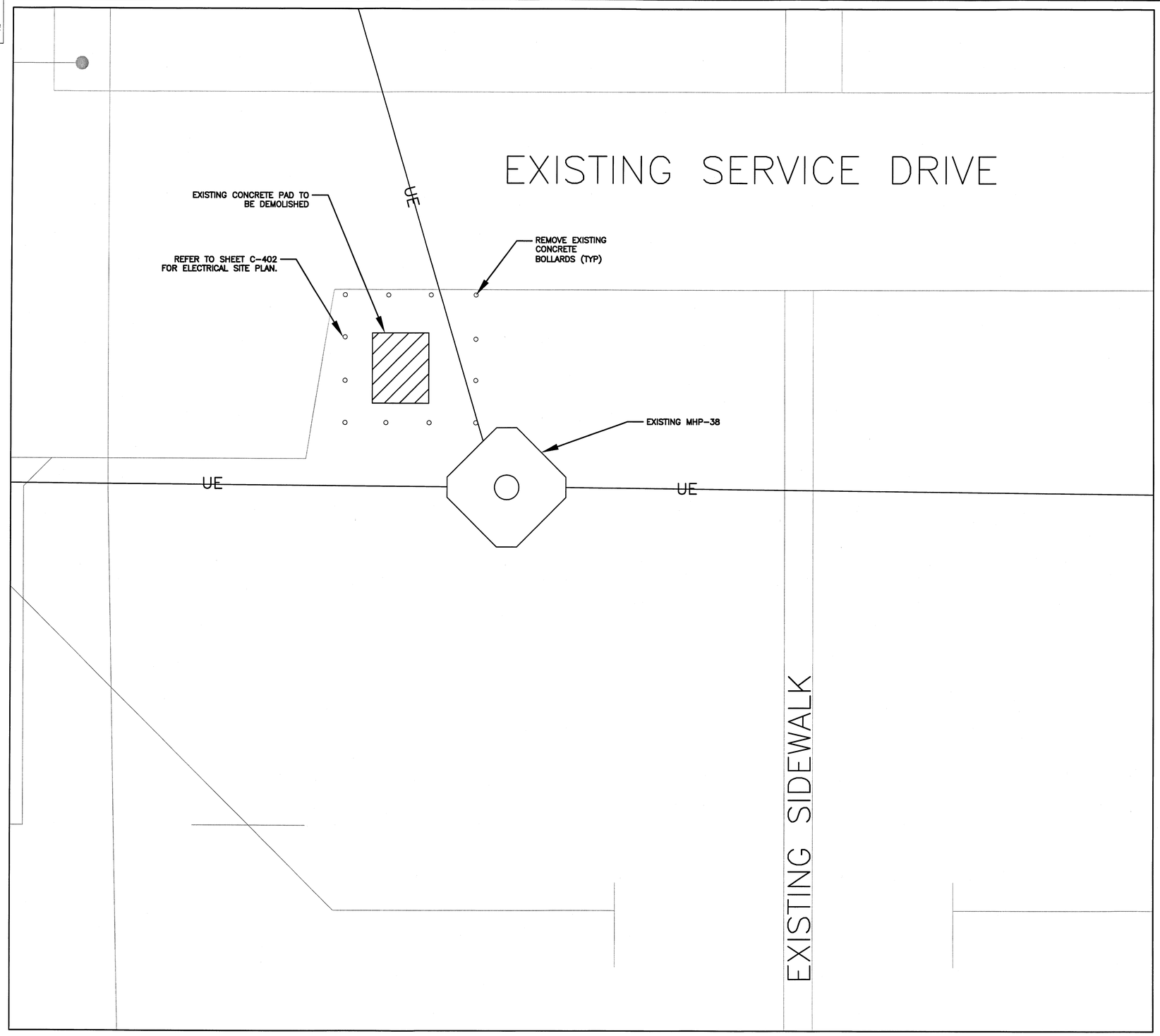

DEMOLITION PLAN – AREA D

SCALE 1" = 5' – 0"

N

GRAPHIC SCALE

5' 0 2.5' 5'

SCALE: 1" = 5'

SPECIFIC NOTES:

A. REFER TO DWG. C-001 FOR GENERAL NOTES.

NOTE:
CONTRACTOR SHALL PROVIDE EROSION CONTROL/SILT FENCE AT ALL STORM SEWER STRUCTURES LOCATED WITHIN AND IMMEDIATELY DOWNSTREAM OF THE PROJECT WORK AREAS. REFER TO DETAIL SHEET C-501.

SYM.	ZONE	DESCRIPTION	DATE	APPROVED
		REVISIONS		

URS
7650 West Courtney Campbell Causeway
Suite 700
Tampa, Florida 33607
Ph: (813) 286-1711 Fax: (813) 286-6587
Florida Engineering Number: 000002

SIGNATURES		DATE
DRAWN	CAB	9/24/12
CHECKED	JWG	9/24/12
SUBMITTED VICKI M. HARTMAN		9/24/12
ST OF LICENSURE: FL LICENSE NO.: 54611		
APPROVED F. WALKER		9/24/12
S. MEHTA		9/25/12

NATIONAL AERONAUTICS AND SPACE ADMINISTRATION
JOHN F. KENNEDY SPACE CENTER, NASA
KENNEDY SPACE CENTER, FLORIDA

REVITALIZE MEDIUM VOLTAGE ELECTRICAL DISTRIBUTION SYSTEMS, INDUSTRIAL AND PAYLOAD PROCESSING AREAS

DEMOLITION PLAN – AREA D

FILE NO.	SIZE	DWG. NO.
	F	79K39135
PCN NO. 98860		SHEET 18

C-107

I:\NASA KSC\Task No. 1\Drawings\SITE PLAN base.dwg 09/20/2012 14:01

KSC FORM 1-11A (REV 6/91) (C/G 12/93)

NOTICE – WHEN GOVERNMENT DRAWINGS, SPECIFICATIONS, OR OTHER DATA ARE USED FOR ANY PURPOSE OTHER THAN IN CONNECTION WITH A DEFINITELY RELATED GOVERNMENT PROCUREMENT OPERATION, THE UNITED STATES GOVERNMENT THEREBY INCURS NO RESPONSIBILITY NOR ANY OBLIGATION WHATSOEVER; AND THE FACT THAT THE GOVERNMENT MAY HAVE FORMULATED, FURNISHED, OR IN ANY WAY SUPPLIED THE SAID DRAWINGS, SPECIFICATIONS OR OTHER DATA IS NOT TO BE REGARDED BY IMPLICATION OR OTHERWISE AS IN ANY MANNER LICENSING THE HOLDER OR ANY OTHER PERSON OR CORPORATION, OR CONVEYING ANY RIGHTS OR PERMISSION TO MANUFACTURE, USE, OR SELL ANY PATENTED INVENTION THAT MAY IN ANY WAY BE RELATED THERETO.

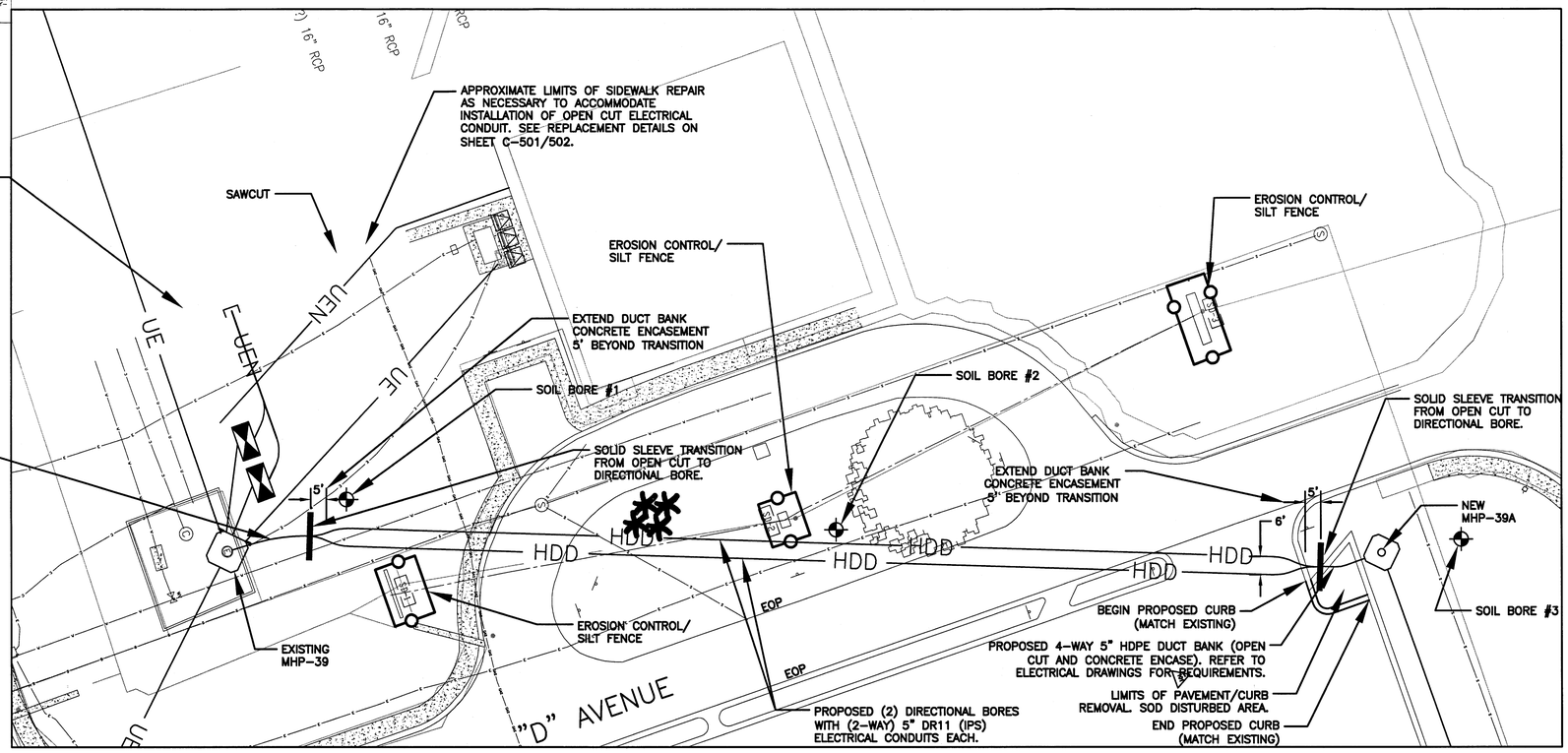

GRAPHIC SCALE

20' 0 10' 20'

SCALE: 1" = 20'

SPECIFIC NOTES:

A. REFER TO DWG. C-001 FOR GENERAL NOTES.

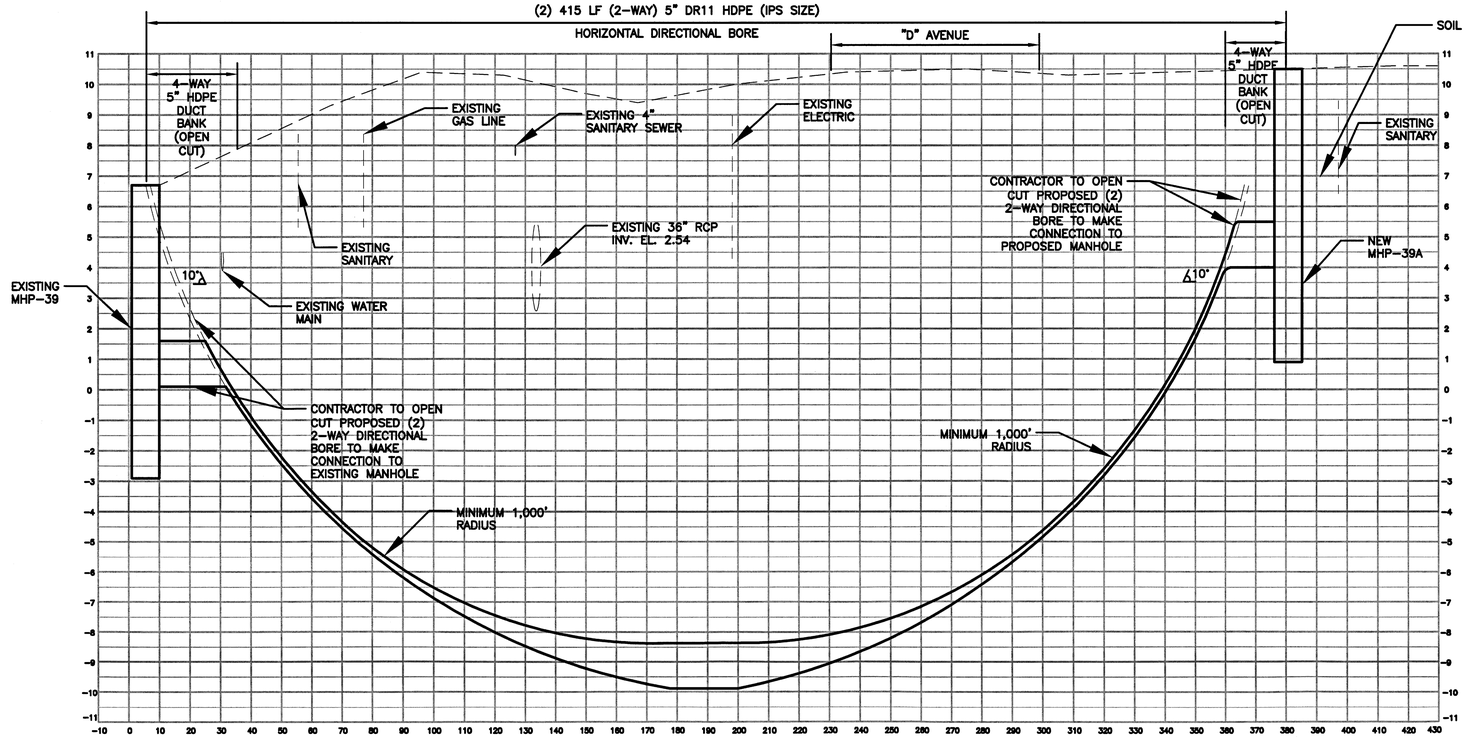

NOTE:
CONTRACTOR TO FIELD VERIFY THE LOCATION AND DEPTH OF ALL EXISTING UTILITY LINES AND ADJUST THE PROPOSED ELECTRICAL CONDUITS IF NEEDED TO AVOID CONFLICT.

NOTE:
CONTRACTOR SHALL PROVIDE EROSION CONTROL/SILT FENCE AT ALL STORM SEWER STRUCTURES LOCATED WITHIN AND IMMEDIATELY DOWNSTREAM OF THE PROJECT WORK AREAS. REFER TO DETAIL SHEET C-501.

SITE PLAN AREA D

SCALE: 1" = 20'

SYM.	ZONE	DESCRIPTION	DATE	APPROVED
		REVISIONS		

URS
7650 West Courtney Campbell Causeway
Suite 700
Tampa, Florida 33607
Ph: (813) 286-1711 Fax: (813) 286-6587
Florida Engineering Number: 000002

SIGNATURES		DATE
DRAWN	CAB	9/24/12
CHECKED	JWG	9/24/12
SUBMITTED VICKI M. HARTMAN		9/24/12
ST OF LICENSURE: FL LICENSE NO.: 54611		
APPROVED F. WALKER		9/24/12
S. MEHTA		9/25/12

NATIONAL AERONAUTICS AND SPACE ADMINISTRATION
JOHN F. KENNEDY SPACE CENTER, NASA
KENNEDY SPACE CENTER, FLORIDA

REVITALIZE MEDIUM VOLTAGE ELECTRICAL DISTRIBUTION SYSTEMS, INDUSTRIAL AND PAYLOAD PROCESSING AREAS

PLAN & PROFILE AREA D

C-401

FILE NO.	SIZE	DWG. NO.
	F	79K39135
PCN NO. 98860		SHEET 19

I:\NASA KSC\Jobs No. 1\Drawings\SITE PLAN Area.dwg 09/20/2012 14:01

KSC FORM 1-11A (REV 8/91) (C/G 12/93)

NOTICE – WHEN GOVERNMENT DRAWINGS, SPECIFICATIONS OR OTHER DATA ARE USED FOR ANY PURPOSE OTHER THAN IN CONNECTION WITH A DEFINITELY GOVERNMENT PROCUREMENT OPERATION, THE UNITED STATES GOVERNMENT THEREBY INCURS NO RESPONSIBILITY NOR ANY OBLIGATION WHATSOEVER; AND THE FACT THAT THE GOVERNMENT MAY HAVE FORMULATED, FURNISHED, OR IN ANY WAY SUPPLIED THE SAID DRAWINGS, SPECIFICATIONS OR OTHER DATA IS NOT TO BE REGARDED BY IMPLICATION OR OTHERWISE AS IN ANY MANNER LICENSING THE HOLDER OR ANY OTHER PERSON OR CORPORATION, OR CONVEYING ANY RIGHTS OR PERMISSION TO MANUFACTURE, USE OR SELL ANY PATENTED INVENTION THAT MAY IN ANY WAY BE RELATED THERETO.

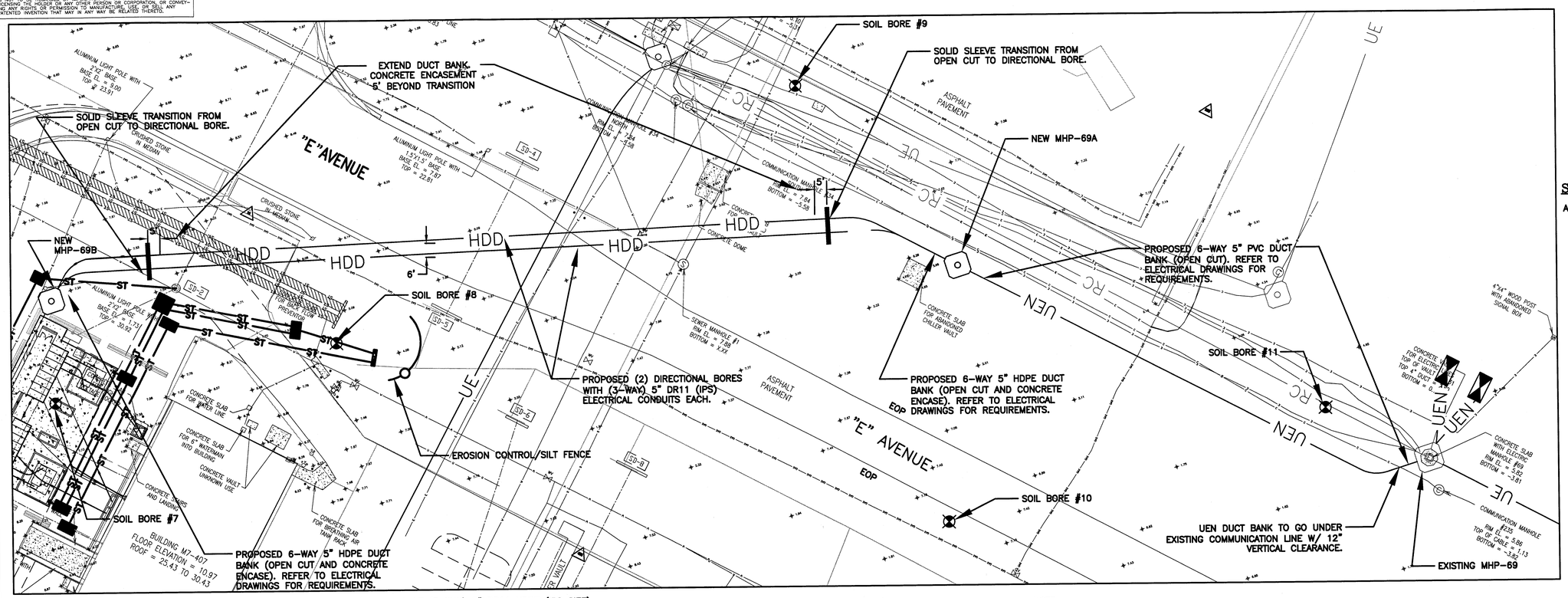

GRAPHIC SCALE

20' 0 10' 20'

SCALE: 1" = 20'

SPECIFIC NOTES:

A. REFER TO DWG. C-001 FOR GENERAL NOTES.

NOTE:
CONTRACTOR TO FIELD VERIFY THE LOCATION AND DEPTH OF ALL EXISTING UTILITY LINES AND ADJUST THE PROPOSED ELECTRICAL CONDUITS IF NEEDED TO AVOID CONFLICT.

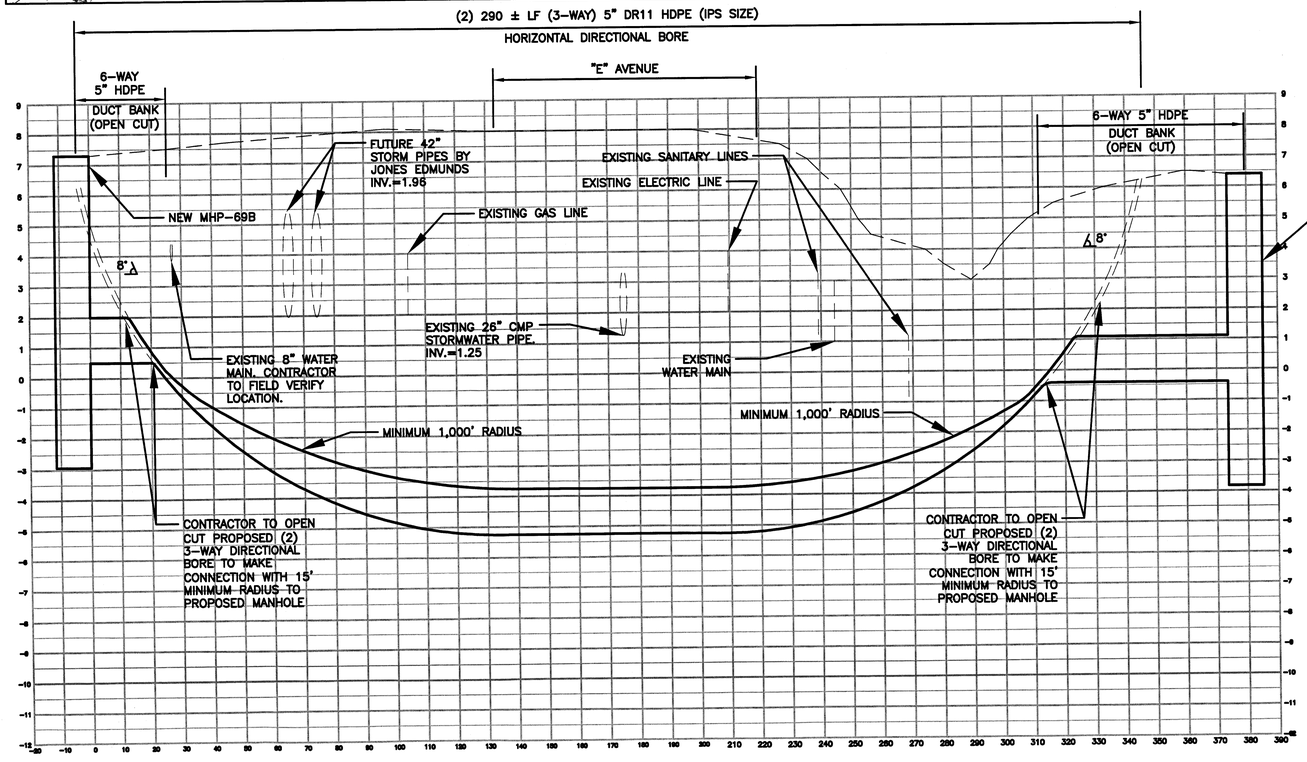

SITE PLAN – AREA A

SCALE 1" = 20' – 0"

NOTE:
CONTRACTOR SHALL PROVIDE EROSION CONTROL/SILT FENCE AT ALL STORM SEWER STRUCTURES LOCATED WITHIN AND IMMEDIATELY DOWNSTREAM OF THE PROJECT WORK AREAS. REFER TO DETAIL SHEET C-501.

SYM.	ZONE	DESCRIPTION	DATE	APPROVED
		REVISIONS		

URS
7650 West Courtney Campbell Causeway
Suite 700
Tampa, Florida 33607
Ph: (813) 286-1711 Fax: (813) 286-6587
Florida Engineering Number: 000002

SIGNATURES		DATE
DRAWN	CAB	9/24/12
CHECKED	JWG	9/24/12
SUBMITTED	VICKI M. HARTMAN	9/24/12
ST OF LICENSURE: FL	LICENSE NO.: 54611	
APPROVED	F. WALKER	9/24/12
	S. MEHTA	

NATIONAL AERONAUTICS AND SPACE ADMINISTRATION
JOHN F. KENNEDY SPACE CENTER, NASA
KENNEDY SPACE CENTER, FLORIDA

REVITALIZE MEDIUM VOLTAGE ELECTRICAL DISTRIBUTION SYSTEMS, INDUSTRIAL AND PAYLOAD PROCESSING AREAS

PLAN & PROFILE AREA A

C-402

FILE NO.	SIZE	DWG. NO.
	F	79K39135
PCN NO. 98860		SHEET 20

KSC FORM 1-11A (REV 6/91) (C/G 12/93)

NOTICE – WHEN GOVERNMENT DRAWINGS, SPECIFICATIONS, OR OTHER DATA ARE USED FOR ANY PURPOSE OTHER THAN IN CONNECTION WITH A DEFINITELY RELATED GOVERNMENT PROCUREMENT OPERATION, THE UNITED STATES GOVERNMENT THEREBY INCURS NO RESPONSIBILITY NOR ANY OBLIGATION WHATSOEVER; AND THE FACT THAT THE GOVERNMENT MAY HAVE FORMULATED, FURNISHED, OR IN ANY WAY SUPPLIED THE SAID DRAWINGS, SPECIFICATIONS OR OTHER DATA IS NOT TO BE REGARDED BY IMPLICATION OR OTHERWISE AS IN ANY MANNER LICENSING THE HOLDER OR ANY OTHER PERSON OR CORPORATION, OR CONVEYING ANY RIGHTS OR PERMISSION TO MANUFACTURE, USE, OR SELL ANY PATENTED INVENTION THAT MAY IN ANY WAY BE RELATED THERETO.

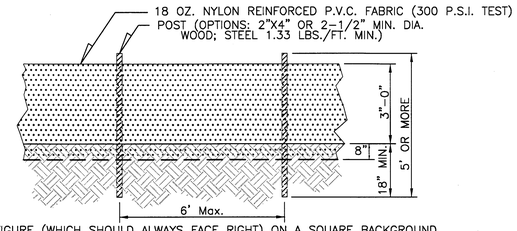

FIGURE (WHICH SHOULD ALWAYS FACE RIGHT) ON A SQUARE BACKGROUND, NOTE: REFER TO LATEST EDITION OF F.D.O.T. "ROADWAY AND TRAFFIC DESIGN STANDARDS" INDEX NO. 103 FOR ADDITIONAL DETAILS AND SPECIFICATIONS.

EROSION / SEDIMENTATION CONTROL DEVICE

N.T.S.

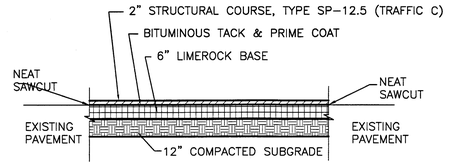

ASPHALT PAVEMENT DETAIL

N.T.S.

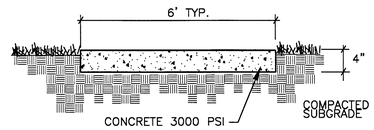

NOTE: USE 1/2" ASPHALT IMPREGNATED EXPANSION JOINT MATERIAL AT 50' O.C. SAW CUT CONTROL JOINTS AT 5' O.C.

SIDEWALK DETAIL

N.T.S.

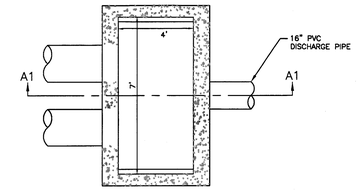

PLAN VIEW
SCALE: NTS

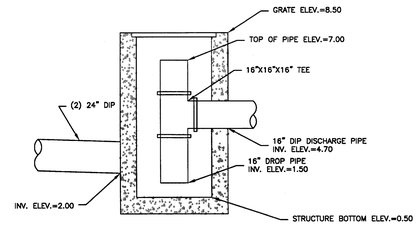

SECTION A1-A1
SCALE: NTS

CONTROL STRUCTURE (ST-7)

FDOT INDEX NO. 200
N.T.S.

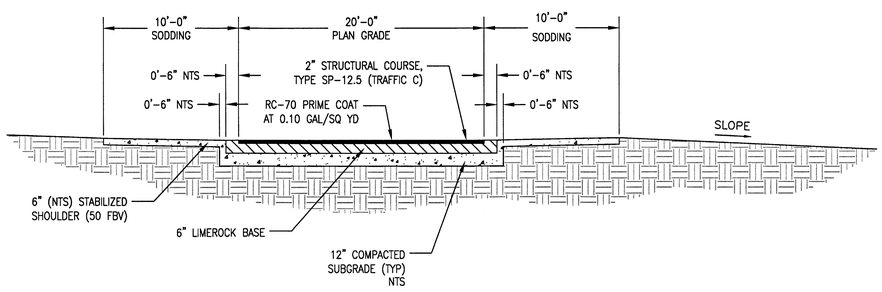

TYPICAL ROAD SECTION

N.T.S.

SYM.	ZONE	DESCRIPTION	DATE	APPROVED
		REVISIONS		

URS
7650 West Courtney Campbell Causeway
Suite 700
Tampa, Florida 33607
Ph: (813) 286-1711 Fax: (813) 286-6587
Florida Engineering Number: 000002

SIGNATURES		DATE
DRAWN	CAB	9/24/12
CHECKED	JWG	9/24/12
SUBMITTED VICKI M. HARTMAN		9/24/12
ST OF LICENSURE: FL		
LICENSE NO.: 54611		
APPROVED F. WALKER		9/24/12
S. MEHTA		9/25/12

NATIONAL AERONAUTICS AND SPACE ADMINISTRATION
JOHN F. KENNEDY SPACE CENTER, NASA
KENNEDY SPACE CENTER, FLORIDA

REVITALIZE MEDIUM VOLTAGE ELECTRICAL DISTRIBUTION SYSTEMS, INDUSTRIAL AND PAYLOAD PROCESSING AREAS

MISCELLANEOUS DETAILS

C-501

FILE NO.	SIZE	DWG. NO.
	F	79K39135
PCN NO. 98860		SHEET 21

T:\NASA KSC\Sub No. 1\Drawings\C-001 GENERAL NOTES AND ABBREVIATIONS.dwg 09/20/2012 14:01
KSC FORM 1-11A (REV 6/91) (C/G 12/93)

NOTICE – WHEN GOVERNMENT DRAWINGS, SPECIFICATIONS, OR OTHER DATA ARE USED FOR ANY PURPOSE OTHER THAN IN CONNECTION WITH A DEFINITELY RELATED GOVERNMENT PROCUREMENT OPERATION, THE UNITED STATES GOVERNMENT THEREBY INCURS NO RESPONSIBILITY NOR ANY OBLIGATION WHATSOEVER; AND THE FACT THAT THE GOVERNMENT MAY HAVE FORMULATED, FURNISHED, OR IN ANY WAY SUPPLIED THE SAID DRAWINGS, SPECIFICATIONS, OR OTHER DATA, IS NOT TO BE REGARDED BY IMPLICATION OR OTHERWISE AS IN ANY MANNER LICENSING THE HOLDER OR ANY OTHER PERSON OR CORPORATION, OR CONVEYING ANY RIGHTS OR PERMISSION TO MANUFACTURE, USE, OR SELL ANY PATENTED INVENTION THAT MAY IN ANY WAY BE RELATED THERETO.

THRUST BLOCK REQUIREMENTS		
PIPE SIZE	THRUST BLOCK AREA REQUIRED	
4"	2.0 SQ. FT.	VALUES ARE FOR 90° BEND. BASED ON 2000 PSF SAFE BEARING LOAD AND PIPE PRESSURE OF 150 PSI. FOR OTHER SOILS & PRESSURES THE AREA REQUIRED IS IN DIRECT PROPORTION.
6"	4.0 SQ. FT.	
8"	6.6 SQ. FT.	
10"	10.0 SQ. FT.	
12"	14.0 SQ. FT.	
14"	18.6 SQ. FT.	
16"	24.0 SQ. FT.	FOR OTHER FITTINGS USE THE FOLLOWING FACTORS: TEES ------100% DEAD ENDS---100% 45° BEND-----71% 22-1/2° BEND--39% 11-1/4° BEND--20%
18"	30.0 SQ. FT.	
20"	37.0 SQ. FT.	
24"	53.0 SQ. FT.	
27"	80.0 SQ. FT.	
30"	98.0 SQ. FT.	
36"	127.0 SQ. FT.	

1. THRUST BLOCKS SHALL BE FORMED AND POURED AGAINST UNDISTURBED SOIL. KEEP 'T' BOLTS CLEAR OF CONCRETE, WRAPPED IN VISQUENE FOR FUTURE ACCESS. WITH A MINIMUM OF 1" THICKNESS BETWEEN THE FITTING AND CONCRETE.
2. BEFORE POURING PLUGS SHALL BE WRAPPED WITH VISQUENE AND A BOARD PLACED IN FRONT.
3. CONCRETE SHALL BE 2500 PSI MINIMUM.

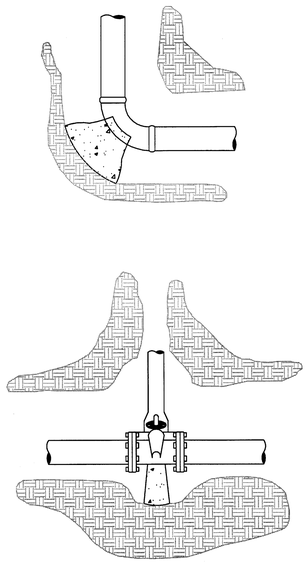

THRUST BLOCK LOCATIONS

N.T.S.

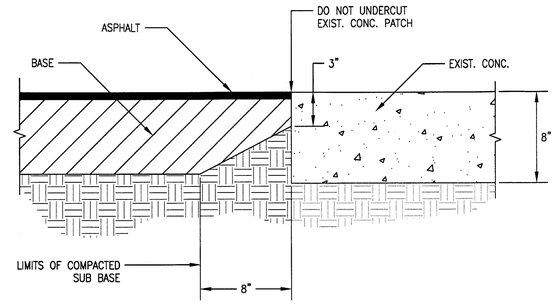

DETAIL AT CONCRETE PATCH

N.T.S.

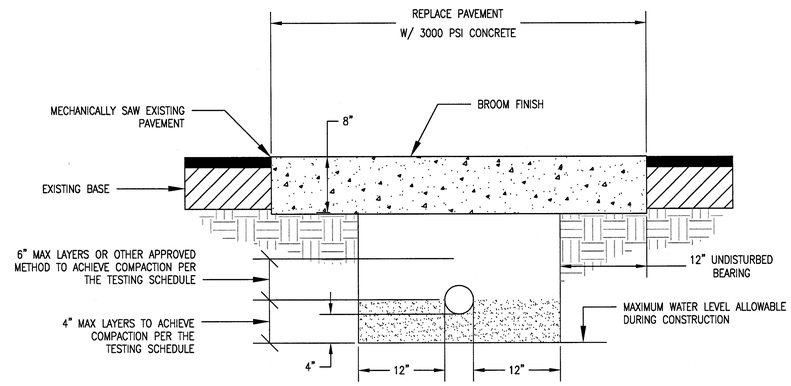

TRENCH DETAIL

N.T.S.

NOTES:

1. NEW SURFACING MATERIAL SHALL BE CONSISTENT WITH EXISTING AND SHALL HAVE LAPPED AND FEATHERED JOINTS (2" MIN. THICKNESS).
2. ALL COMPACTION REQUIREMENTS DETERMINED AT OPTIMUM MOISTURE SHALL BE IN ACCORDANCE WITH THE TESTING SCHEDULE ON SHEET C-001.

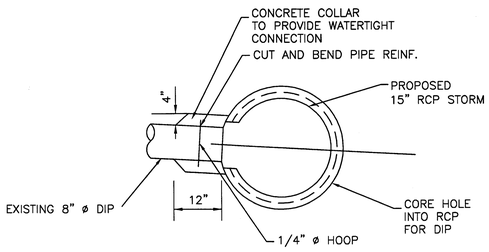

DOWNSPOUT RECEIVER

FDOT INDEX NO. 280

N.T.S.

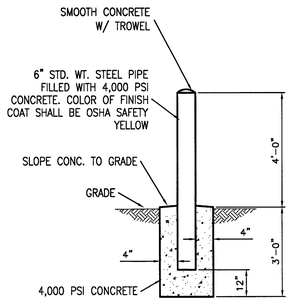

BOLLARD DETAIL

N.T.S.

SYM.	ZONE	DESCRIPTION	DATE	APPROVED
		REVISIONS		

URS
7650 West Courtney Campbell Causeway
Suite 700
Tampa, Florida 33607
Ph: (813) 286-1711 Fax: (813) 286-6587
Florida Engineering Number: 000002

SIGNATURES		DATE
DRAWN	CAB	9/24/12
CHECKED	JWG	9/24/12
SUBMITTED	VICKI M. HARTMAN	9/24/12
ST OF LICENSURE: FL		
LICENSE NO.: 54611		
APPROVED	F. WALKER	9/24/12
	S. MEHTA	9/25/12

NATIONAL AERONAUTICS AND SPACE ADMINISTRATION
JOHN F. KENNEDY SPACE CENTER, NASA
KENNEDY SPACE CENTER, FLORIDA

REVITALIZE MEDIUM VOLTAGE ELECTRICAL DISTRIBUTION SYSTEMS, INDUSTRIAL AND PAYLOAD PROCESSING AREAS

MISCELLANEOUS DETAILS (2)

C-502

FILE NO.	SIZE	DWG. NO.
	F	79K39135
PCN NO. 98860		SHEET 22

T:\NASA KSC\Task Dwg. 1\Drawings\C-001 GENERAL NOTES AND ABBREVIATIONS.dwg 09/20/2012 14:01

KSC FORM 1-11A (REV 8/91) (C/G 12/93)

NOTICE – WHEN GOVERNMENT DRAWINGS, SPECIFICATIONS, OR OTHER DATA ARE USED FOR ANY PURPOSE OTHER THAN IN CONNECTION WITH A DEFINITELY RELATED GOVERNMENT PROCUREMENT OPERATION, THE UNITED STATES GOVERNMENT THEREBY INCURS NO RESPONSIBILITY NOR ANY OBLIGATION WHATSOEVER; AND THE FACT THAT THE GOVERNMENT MAY HAVE FORMULATED, FURNISHED, OR IN ANY WAY SUPPLIED THE SAID DRAWINGS, SPECIFICATIONS, OR OTHER DATA IS NOT TO BE REGARDED BY IMPLICATION OR OTHERWISE AS IN ANY MANNER LICENSING THE HOLDER OR ANY OTHER PERSON OR CORPORATION, OR CONVEYING ANY RIGHTS OR PERMISSION TO MANUFACTURE, USE, OR SELL ANY PATENTED INVENTION THAT MAY IN ANY WAY BE RELATED THERETO.

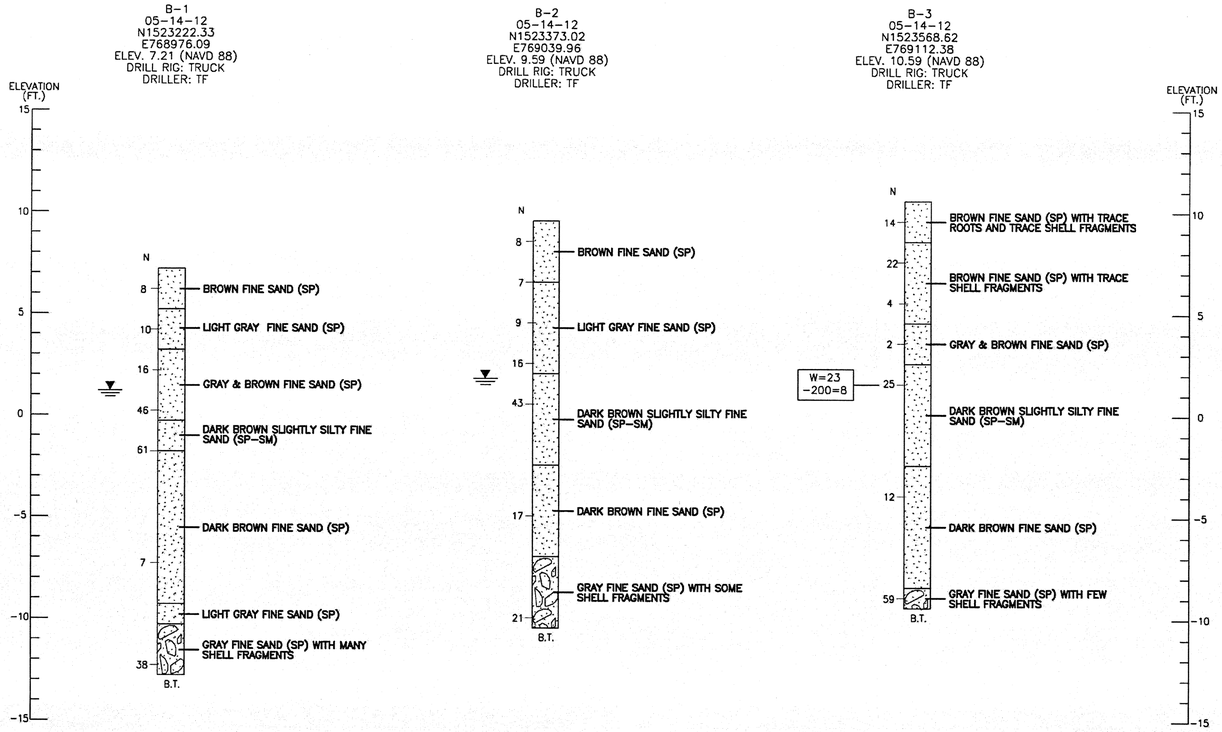

LEGEND

FINE SAND (SP); SLIGHTLY SILTY FINE SAND (SP-SM)

SHELLS

LIMEROCK

ASPHALT

(SP) UNIFIED SOIL CLASSIFICATION SYSTEM

N STANDARD PENETRATION RESISTANCE IN BLOWS PER FT UNLESS OTHERWISE NOTED. NUMBERS TO THE LEFT OF BORING INDICATE N-VALUES.

W / -200 / OC — NATURAL MOISTURE CONTENT (%) / FINES PASSING NO. 200 SIEVE (%) / ORGANIC CONTENT (%)

GROUND WATER LEVEL AT TIME OF DRILLING

B.T. STANDARD PENETRATION TEST BORING TERMINATION DEPTH

STANDARD PENETRATION TEST DATA

SPOON INSIDE DIA.	1.44 INCHES
SPOON OUTSIDE DIA.	2.0 INCHES
ASTM STANDARD DROP HAMMER, MANUAL.	
AVG. HAMMER DROP	30.0 INCHES
HAMMER WEIGHT	140.0 LBS

GRANULAR MATERIALS

RELATIVE DENSITY	SPT (BLOWS/FT)
VERY LOOSE	0-4
LOOSE	5-10
MEDIUM DENSE	11-30
DENSE	31-50
VERY DENSE	OVER 50

SILTS AND CLAYS

CONSISTENCY	SPT (BLOWS/FT)
VERY SOFT	0-2
SOFT	3-4
FIRM	5-8
STIFF	9-15
VERY STIFF	16-30
HARD	31-50
VERY HARD	OVER 50

NOTES:

1) DRILL AND PENETRATION TESTING WAS PERFORMED IN ACCORDANCE WITH ASTM D-1586.

2) LAYER BOUNDARIES ARE APPROXIMATE AND MAY VARY BETWEEN OR AWAY FROM BORING LOCATIONS.

CSIGeo
GEOTECHNICAL · CMT · CEI
2394 ST. JOHNS BLUFF ROAD, S. SUITE 200
JACKSONVILLE, FLORIDA 32246

GEOTECHNICAL ENGINEERING
CONSTRUCTION MATERIAL TESTING
CONSTRUCTION ENGINEERING INSPECTION

REPORT OF SPT BORINGS

KENNEDY SPACE CENTER
UPGRADE MEDIUM VOLTAGE SYSTEM
BREVARD COUNTY, FLORIDA

SHEET 1 OF 3

SYM.	ZONE	DESCRIPTION	DATE	APPROVED

REVISIONS

URS
7650 West Courtney Campbell Causeway
Suite 700
Tampa, Florida 33607
Ph: (813) 286-1711 Fax: (813) 286-6587
Florida Engineering Number: 000002

SIGNATURES		DATE
DRAWN	CAB	9/24/12
CHECKED	JWG	9/24/12
SUBMITTED VICKI M. HARTMAN		9/24/12
ST OF LICENSURE: FL LICENSE NO.: 54611		
APPROVED F. WALKER		9/24/12
S. MEHTA		9/25/12

NATIONAL AERONAUTICS AND SPACE ADMINISTRATION
JOHN F. KENNEDY SPACE CENTER, NASA
KENNEDY SPACE CENTER, FLORIDA

REVITALIZE MEDIUM VOLTAGE ELECTRICAL DISTRIBUTION SYSTEMS, INDUSTRIAL AND PAYLOAD PROCESSING AREAS

MISCELLANEOUS DETAILS (3)

C-503

FILE NO.	SIZE	DWG. NO.
	F	79K39135
PCN NO. 98860		SHEET 23

I:\NASA KSC\Task No. 1\Drawings\C-001 GENERAL NOTES AND ABBREVIATIONS.dwg 09/20/2012 14:01
KSC FORM 1-11A (REV 8/91) (C/G 12/93)

NOTICE – WHEN GOVERNMENT DRAWINGS, SPECIFICATIONS, OR OTHER DATA ARE USED FOR ANY PURPOSE OTHER THAN IN CONNECTION WITH A DEFINITELY RELATED GOVERNMENT PROCUREMENT OPERATION, THE UNITED STATES GOVERNMENT THEREBY INCURS NO RESPONSIBILITY NOR ANY OBLIGATION WHATSOEVER; AND THE FACT THAT THE GOVERNMENT MAY HAVE FORMULATED, FURNISHED, OR IN ANY WAY SUPPLIED THE SAID DRAWINGS, SPECIFICATIONS, OR OTHER DATA IS NOT TO BE REGARDED BY IMPLICATION OR OTHERWISE AS IN ANY MANNER LICENSING THE HOLDER OR ANY OTHER PERSON OR CORPORATION, OR CONVEYING ANY RIGHTS OR PERMISSION TO MANUFACTURE, USE, OR SELL ANY PATENTED INVENTION THAT MAY IN ANY WAY BE RELATED THERETO.

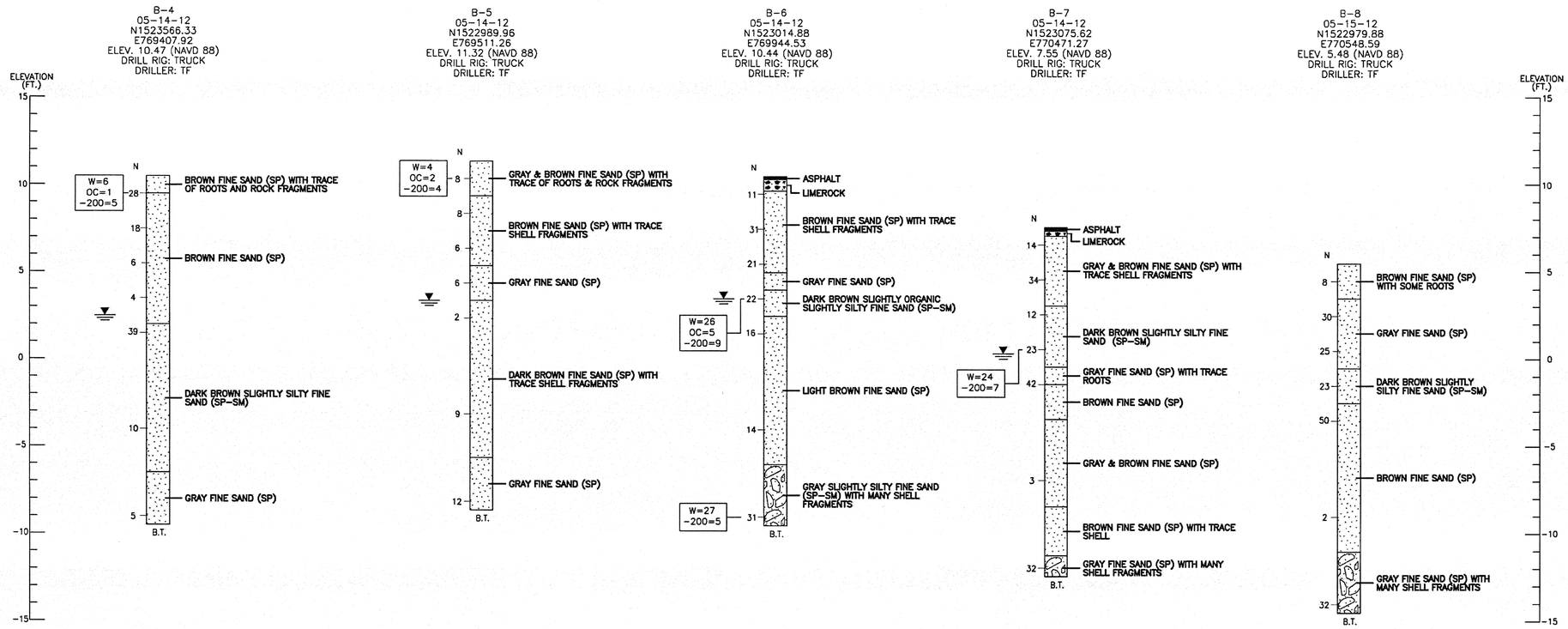

CSIGeo
GEOTECHNICAL · CMT · CEI
2394 ST. JOHNS BLUFF ROAD, S. SUITE 200
JACKSONVILLE, FLORIDA 32246

GEOTECHNICAL ENGINEERING
CONSTRUCTION MATERIAL TESTING
CONSTRUCTION ENGINEERING INSPECTION

REPORT OF SPT BORINGS
KENNEDY SPACE CENTER
UPGRADE MEDIUM VOLTAGE SYSTEM
BREVARD COUNTY, FLORIDA

SHEET 2 OF 3

SYM.	ZONE	DESCRIPTION	DATE	APPROVED
		REVISIONS		

URS
7650 West Courtney Campbell Causeway
Suite 700
Tampa, Florida 33607
Ph: (813) 286-1711 Fax: (813) 286-6587
Florida Engineering Number: 000002

SIGNATURES		DATE
DRAWN	CAB	9/24/12
CHECKED	JWG	9/24/12
SUBMITTED	VICKI M. HARTMAN	9/24/12
ST OF LICENSURE: FL		
LICENSE NO.: 54611		
APPROVED	F. WALKER	9/24/12
	S. MEHTA	9/25/12

NATIONAL AERONAUTICS AND SPACE ADMINISTRATION
JOHN F. KENNEDY SPACE CENTER, NASA
KENNEDY SPACE CENTER, FLORIDA

REVITALIZE MEDIUM VOLTAGE
ELECTRICAL DISTRIBUTION SYSTEMS,
INDUSTRIAL AND PAYLOAD PROCESSING AREAS

MISCELLANEOUS DETAILS (4)

C-504

FILE NO.	SIZE	DWG. NO.
	F	79K39135
PCN NO. 98860		SHEET 24

KSC FORM 1-11A (REV 8/91) (C/G 8/93)

NOTICE – WHEN GOVERNMENT DRAWINGS, SPECIFICATIONS, OR OTHER DATA ARE USED FOR ANY PURPOSE OTHER THAN IN CONNECTION WITH A DEFINITELY RELATED GOVERNMENT PROCUREMENT OPERATION, THE UNITED STATES GOVERNMENT THEREBY INCURS NO RESPONSIBILITY NOR ANY OBLIGATION WHATSOEVER; AND THE FACT THAT THE GOVERNMENT MAY HAVE FORMULATED, FURNISHED, OR IN ANY WAY SUPPLIED THE SAID DRAWINGS, SPECIFICATIONS, OR OTHER DATA IS NOT TO BE REGARDED BY IMPLICATION OR OTHERWISE AS IN ANY MANNER LICENSING THE HOLDER OR ANY OTHER PERSON OR CORPORATION, OR CONVEYING ANY RIGHTS OR PERMISSION TO MANUFACTURE, USE OR SELL ANY PATENTED INVENTION THAT MAY IN ANY WAY BE RELATED THERETO.

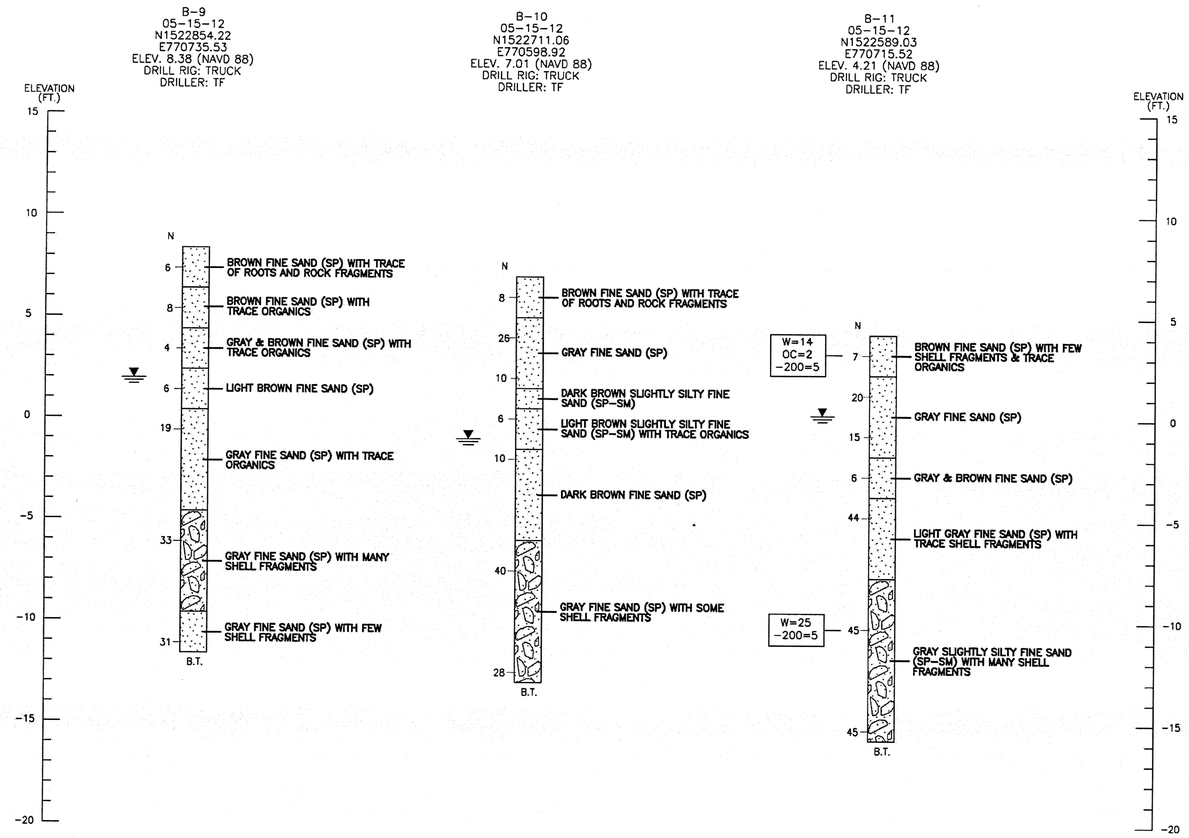

CSIGeo
GEOTECHNICAL · CMT · CEI
2394 ST. JOHNS BLUFF ROAD, S. SUITE 200
JACKSONVILLE, FLORIDA 32246

GEOTECHNICAL ENGINEERING
CONSTRUCTION MATERIAL TESTING
CONSTRUCTION ENGINEERING INSPECTION

REPORT OF SPT BORINGS

KENNEDY SPACE CENTER
UPGRADE MEDIUM VOLTAGE SYSTEM
BREVARD COUNTY, FLORIDA

SHEET 3 OF 3

SYM.	ZONE	DESCRIPTION	DATE	APPROVED
		REVISIONS		

URS
7650 West Courtney Campbell Causeway
Suite 700
Tampa, Florida 33607
Ph: (813) 286-1711 Fax: (813) 286-6587
Florida Engineering Number: 000002

SIGNATURES		DATE
DRAWN	CAB	9/24/12
CHECKED	JWG	9/24/12
SUBMITTED	VICKI M. HARTMAN	9/24/12
ST OF LICENSURE: FL		
LICENSE NO.: 54611		
APPROVED	F. WALKER	9/24/12
	S. MEHTA	9/25/12

NATIONAL AERONAUTICS AND SPACE ADMINISTRATION
JOHN F. KENNEDY SPACE CENTER, NASA
KENNEDY SPACE CENTER, FLORIDA

REVITALIZE MEDIUM VOLTAGE
ELECTRICAL DISTRIBUTION SYSTEMS,
INDUSTRIAL AND PAYLOAD PROCESSING AREAS

MISCELLANEOUS DETAILS (5)

C-505

FILE NO.	SIZE	DWG. NO.
	F	79K39135
PCN NO. 98860		SHEET 25

T:\NASA KSC\Code 60, 1\Drawings\C-001 GENERAL NOTES AND ABBREVIATIONS.dwg 09/20/2012 14:01

KSC FORM 1-11A (REV 6/91) (C/C 12/93)

NOTICE – WHEN GOVERNMENT DRAWINGS, SPECIFICATIONS, OR OTHER DATA ARE USED FOR ANY PURPOSE OTHER THAN IN CONNECTION WITH A DEFINITELY RELATED GOVERNMENT PROCUREMENT OPERATION, THE UNITED STATES GOVERNMENT THEREBY INCURS NO RESPONSIBILITY NOR ANY OBLIGATION WHATSOEVER; AND THE FACT THAT THE GOVERNMENT MAY HAVE FORMULATED, FURNISHED, OR IN ANY WAY SUPPLIED THE SAID DRAWINGS, SPECIFICATIONS, OR OTHER DATA IS NOT TO BE REGARDED, BY IMPLICATION OR OTHERWISE AS IN ANY MANNER LICENSING THE HOLDER OR ANY OTHER PERSON OR CORPORATION, OR CONVEYING ANY RIGHTS OR PERMISSION TO MANUFACTURE, USE, OR SELL ANY PATENTED INVENTION THAT MAY IN ANY WAY BE RELATED THERETO.

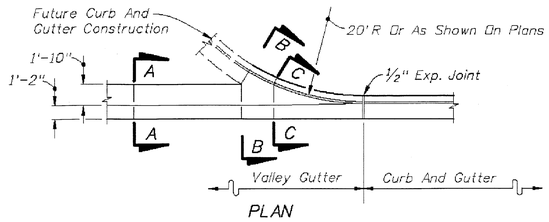

PLAN

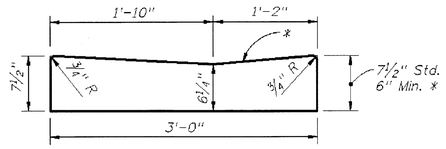

SECTION AA

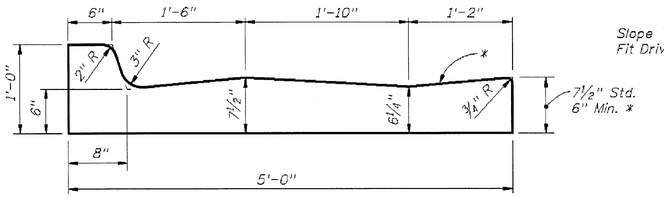

SECTION BB

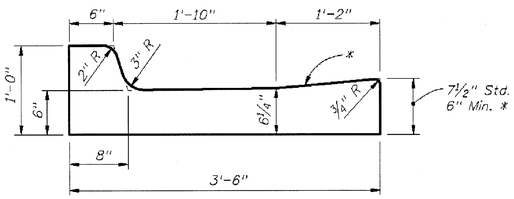

SECTION CC

VALLEY GUTTER

* When used on high side of roadways, the cross slope of the gutter shall match the cross slope of the adjacent pavement. The thickness of the lip shall be 6", unless otherwise shown on plans.

◪ Rotate entire section so that gutter cross slope matches slope of adjacent circulating roadway pavement.

For use adjacent to concrete or flexible pavement. For details depicting usage adjacent to flexible pavement, see Sheet 2. Expansion joint, preformed joint filler and joint seal are required between curb & gutter and concrete pavement only, see Sheet 2.

CONCRETE CURB AND GUTTER

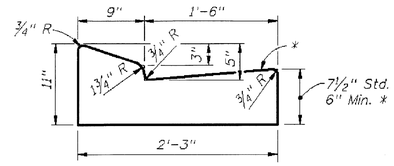

TYPE E

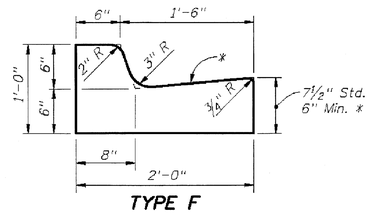

TYPE F

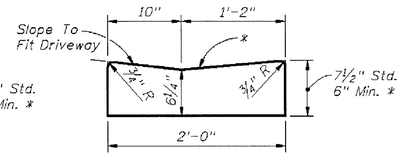

Note: To be paid for as parent curb.

DROP CURB

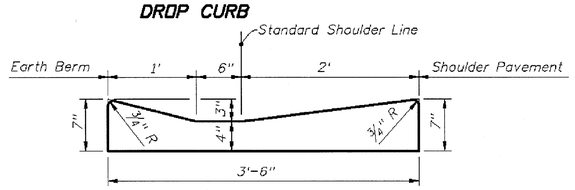

SHOULDER GUTTER

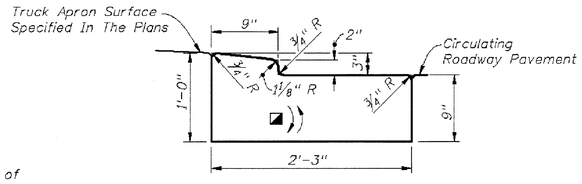

TRAFFIC BEARING SECTION FOR USE IN ROUNDABOUT CENTRAL ISLAND CONSTRUCTION

TYPE RA

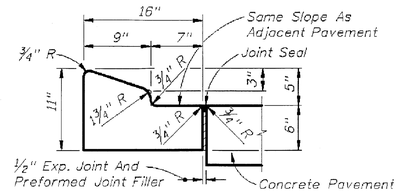

For details depicting usage adjacent to flexible pavement, see diagram right.

TYPE A

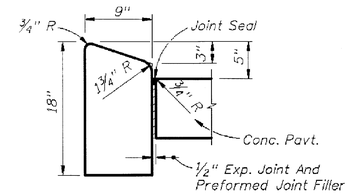

TYPE B

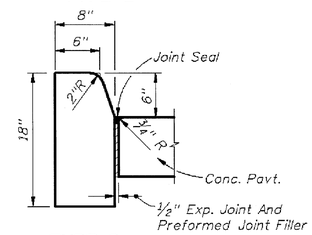

TYPE D

Note:

For use adjacent to concrete or flexible pavement, concrete shown. Expansion joint, preformed joint filler and joint seal are required between curbs and concrete pavement only, see Sheet 2.

CONCRETE CURB

2010 FDOT Design Standards

CURB & CURB AND GUTTER

Last Revision	Sheet No.
00	1 of 2
Index No.	
300	

SYM.	ZONE	DESCRIPTION	DATE	APPROVED
REVISIONS				

URS
7650 West Courtney Campbell Causeway
Suite 700
Tampa, Florida 33607
Ph: (813) 286-1711 Fax: (813) 286-6587
Florida Engineering Number: 000002

SIGNATURES		DATE
DRAWN	CAB	9/24/12
CHECKED	JWG	9/24/12
SUBMITTED VICKI M. HARTMAN		9/24/12
ST OF LICENSURE: FL LICENSE NO.: 54611		
APPROVED F. WALKER		9/24/12
S. MEHTA		9/25/12

NATIONAL AERONAUTICS AND SPACE ADMINISTRATION
JOHN F. KENNEDY SPACE CENTER, NASA
KENNEDY SPACE CENTER, FLORIDA

REVITALIZE MEDIUM VOLTAGE ELECTRICAL DISTRIBUTION SYSTEMS, INDUSTRIAL AND PAYLOAD PROCESSING AREAS

MISCELLANEOUS DETAILS (6)

C-506

FILE NO. | SIZE F | DWG. NO. 79K39135

PCN NO. 98860 | SHEET 26

T:\NASA KSC\Task No. 1\Drawings\C-001 GENERAL NOTES AND ABBREVIATIONS.dwg 09/20/2012 14:01
KSC FORM 1-11A (REV 6/91) (C/G 12/93)

NOTICE – WHEN GOVERNMENT DRAWINGS, SPECIFICATIONS, OR OTHER DATA ARE USED FOR ANY PURPOSE OTHER THAN IN CONNECTION WITH A DEFINITELY RELATED GOVERNMENT PROCUREMENT OPERATION, THE UNITED STATES GOVERNMENT THEREBY INCURS NO RESPONSIBILITY NOR ANY OBLIGATION WHATSOEVER; AND THE FACT THAT THE GOVERNMENT MAY HAVE FORMULATED, FURNISHED, OR IN ANY WAY SUPPLIED THE SAID DRAWINGS, SPECIFICATIONS, OR OTHER DATA IS NOT TO BE REGARDED BY IMPLICATION OR OTHERWISE AS IN ANY MANNER LICENSING THE HOLDER OR ANY OTHER PERSON OR CORPORATION, OR CONVEYING ANY RIGHTS OR PERMISSION TO MANUFACTURE, USE, OR SELL ANY PATENTED INVENTION THAT MAY IN ANY WAY BE RELATED THERETO.

GENERAL STRUCTURAL NOTES

A – BUILDING CODES:

1. FLORIDA BUILDING CODE, 2010 EDITION
2. ACI 318-08 BUILDING CODE REQUIREMENTS FOR REINFORCED CONCRETE
3. AMERICAN INSTITUTE OF STEEL CONSTRUCTION (AISC) SPECIFICATION FOR THE DESIGN, FABRICATION, AND ERECTION OF STRUCTURAL STEEL FOR BUILDINGS, NINTH EDITION.
4. AWS STRUCTURAL WELDING CODE (LATEST EDITION) – D1.1 STEEL

B – DESIGN CRITERIA:

1. WIND LOADS AS PER ASCE 7-10 FOR NOMINAL DESIGN WIND SPEED OF 125 MPH.
   RISK CATEGORY: II
   EXPOSURE "C"
2. ALLOWABLE SOIL PRESSURE 2000 PSF (ASSUMED)

C – CONSTRUCTION MATERIALS:

1. CAST-IN-PLACE CONCRETE COMPRESSIVE STRENGTH 4000 PSI AT 28 DAYS
2. REINFORCING STEEL: ASTM A 615, GRADE 60 UNCOATED
3. WELDING ELECTRODES: AWS E-70XX (STEEL).
4. STRUCTURAL TUBES: ASTM A-500 (GRADE B).
5. STEEL PIPE: ASTM A 53, TYPE E OR S, GRADE B.
6. ALL MISCELLANEOUS STEEL: ASTM A 36.
7. NON-METALLIC NON-SHRINK GROUT (5000 PSI).

D – FOUNDATIONS:

1. COMPACTION SHALL BE AS PER SPECIFICATION SECTION 31 00 00 EARTHWORK.
2. THE DEWATERING SYSTEM SHALL CONTROL THE GROUND WATER IN A MANNER THAT WILL PRESERVE THE STRENGTH OF THE FOUNDATION SOILS, WILL NOT CAUSE INSTABILITY OF THE EXCAVATION SLOPES AND WILL NOT RESULT IN DAMAGE TO EXISTING STRUCTURES (IF OCCURING). AND UTILITY LINES.
3. THE CONTRACTOR SHALL BE RESPONSIBLE FOR THE DISPOSAL OF WATER GENERATED BY THE CONTRACTOR'S OPERATIONS.
4. PRIOR TO EXCAVATION, THE CONTRACTOR SHALL DEVISE A DEWATERING PLAN THAT WILL BE ACCEPTABLE TO CONTRACTING OFFICER AND ALL AGENCIES HAVING JURISDICTION.

E – STRUCTURAL STEEL:

1. ALL PHASES OF ERECTION AND CONSTRUCTION SHALL FOLLOW OSHA REGULATIONS.
2. ALL WELDMENTS SHALL BE INSPECTED AND APPROVED BEFORE COVERED BY OTHER MEMBERS OR OTHER WELDMENTS.
3. THE USE OF CUTTING TORCH IN THE FIELD WILL NOT BE PERMITTED, UNLESS APPROVED BY THE CONTRACTING OFFICER, AND A KSC BURN PERMIT IS OBTAINED.
4. ALL WELDS SHALL BE FILLET WELDS OF THE MINIMUM SIZE REQUIRED FOR THE THICKNESS OF PLATES CONNECTED, AS PER AISC, U.N.O.

F – CONCRETE WORK:

1. ALL METAL COMPONENTS AND ASSEMBLIES SHALL BE HOT DIP GALVANIZED IN ACCORDANCE WITH SPECIFICATION SECTION 05 12 00, STRUCTURAL STEEL. ALL CONCRETE EMBEDDED STEEL ANGLES, WELD PLATES, ETC., SHALL BE GALVANIZED, PRIOR TO EMBEDMENT, IN ACCORDANCE WITH ASTM A-123 AND A-153. NO REINFORCEMENT SHALL BE GALVANIZED.
2. ALL REINFORCEMENT TO BE DETAILED AND FABRICATED IN ACCORDANCE WITH ACI 315R-94.
3. FORMING AND EMBEDMENTS SHALL MEET THE FOLLOWING:
   A. ALL EXPOSED EDGES OF CONCRETE SHALL BE CHAMFERED 3/4" INSIDE FORMS OR TOOLED TO 3/4" RADIUS, UNLESS NOTED OTHERWISE.
   B. THE CONTRACTOR SHALL BE RESPONSIBLE FOR THE DESIGN OF ALL FORMING.
   C. NO ALUMINUM SHALL BE EMBEDDED IN CONCRETE.

G – SUBMITTAL:

1. SUBMIT FOR ENGINEER REVIEW SHOP DRAWINGS FOR THE FOLLOWING ITEMS:
   REINFORCING STEEL
   CONCRETE MIX DESIGNS
   MISCELLANEOUS STEEL.
   UNDERPINNING SYSTEM (*#)
2. ALL SHOP DRAWINGS MUST BE REVIEWED AND STAMPED BY THE GENERAL CONTRACTOR PRIOR TO SUBMITTAL.
   ITEMS MARKED (*) SHALL HAVE SHOP DRAWINGS SEALED BY A PROFESSIONAL ENGINEER REGESTERED IN THE STATE OF FLORIDA. ITEMS MARKED (#) SHALL BE SUBMITTED FOR ENGINEER'S RECORD ONLY.

FREQUENTLY USED ABBREVIATIONS

@	AT
ADD'L	ADDITIONAL
CL	CENTER LINE
CLR	CLEAR, CLEARANCE
C/C	CENTER TO CENTER
CONC	CONCRETE
CONT	CONTINUOUS
DIA.	DIAMETER
E.W.	EACH WAY
FDN	FOUNDATION
GALV	GALVANIZED
HORIZ.	HORIZONTAL
HSS	HOLLOW STRUCTURAL SECTION
MIN	MINIMUM
N.T.S.	NOT TO SCALE
O.C.	ON CENTER
OPP. HD	OPPOSITE HAND
PL	PLATE
SCH	SCHEDULE
SIM	SIMILAR
STD	STANDARD
T/	TOP
TYP	TYPICAL
U.N.O.	UNLESS NOTED OTHERWISE
W/	WITH

SYM.	ZONE	DESCRIPTION	DATE	APPROVED
		REVISIONS		

URS
7650 West Courtney Campbell Causeway
Suite 700
Tampa, Florida 33607
Ph: (813) 286-1711 Fax: (813) 286-6587
Florida Engineering Number: 000002

SIGNATURES		DATE
DRAWN	EJC	9/24/12
CHECKED	WNH	9/24/12
SUBMITTED	SAEED HASANNI	9/24/12
ST OF LICENSURE: FL		
LICENSE NO.: 42590		
APPROVED	F. WALKER	9/24/12
	S. MEHTA	9/25/12

NATIONAL AERONAUTICS AND SPACE ADMINISTRATION
JOHN F. KENNEDY SPACE CENTER, NASA
KENNEDY SPACE CENTER, FLORIDA

REVITALIZE MEDIUM VOLTAGE
ELECTRICAL DISTRIBUTION SYSTEMS,
INDUSTRIAL AND PAYLOAD PROCESSING AREAS

GENERAL NOTES AND
ABBREVIATIONS

FILE NO.	SIZE	DWG. NO.
	F	79K39135
PCN NO. 98860		SHEET 27

S-001

F:\NASA KSC\Task No. 1\Drawings\S-001 GENERAL NOTES AND ABBREVIATIONS.dwg 09/20/2012 12:24

KSC FORM 1-11A (REV 8/91) (C/G 12/93)

NOTICE – WHEN GOVERNMENT DRAWINGS, SPECIFICATIONS, OR OTHER DATA ARE USED FOR ANY PURPOSE OTHER THAN IN CONNECTION WITH A DEFINITELY MENTIONED GOVERNMENT PROCUREMENT OPERATION, THE UNITED STATES GOVERNMENT THEREBY INCURS NO RESPONSIBILITY NOR ANY OBLIGATION WHATSOEVER; AND THE FACT THAT THE GOVERNMENT MAY HAVE FORMULATED, FURNISHED, OR IN ANY WAY SUPPLIED THE SAID DRAWINGS, SPECIFICATIONS, OR OTHER DATA IS NOT TO BE REGARDED BY IMPLICATION OR OTHERWISE AS IN ANY MANNER LICENSING THE HOLDER OR ANY OTHER PERSON OR CORPORATION, OR CONVEYING RIGHTS OR PERMISSION TO MANUFACTURE, USE, OR SELL ANY PATENTED INVENTION THAT MAY IN ANY WAY BE RELATED THERETO.

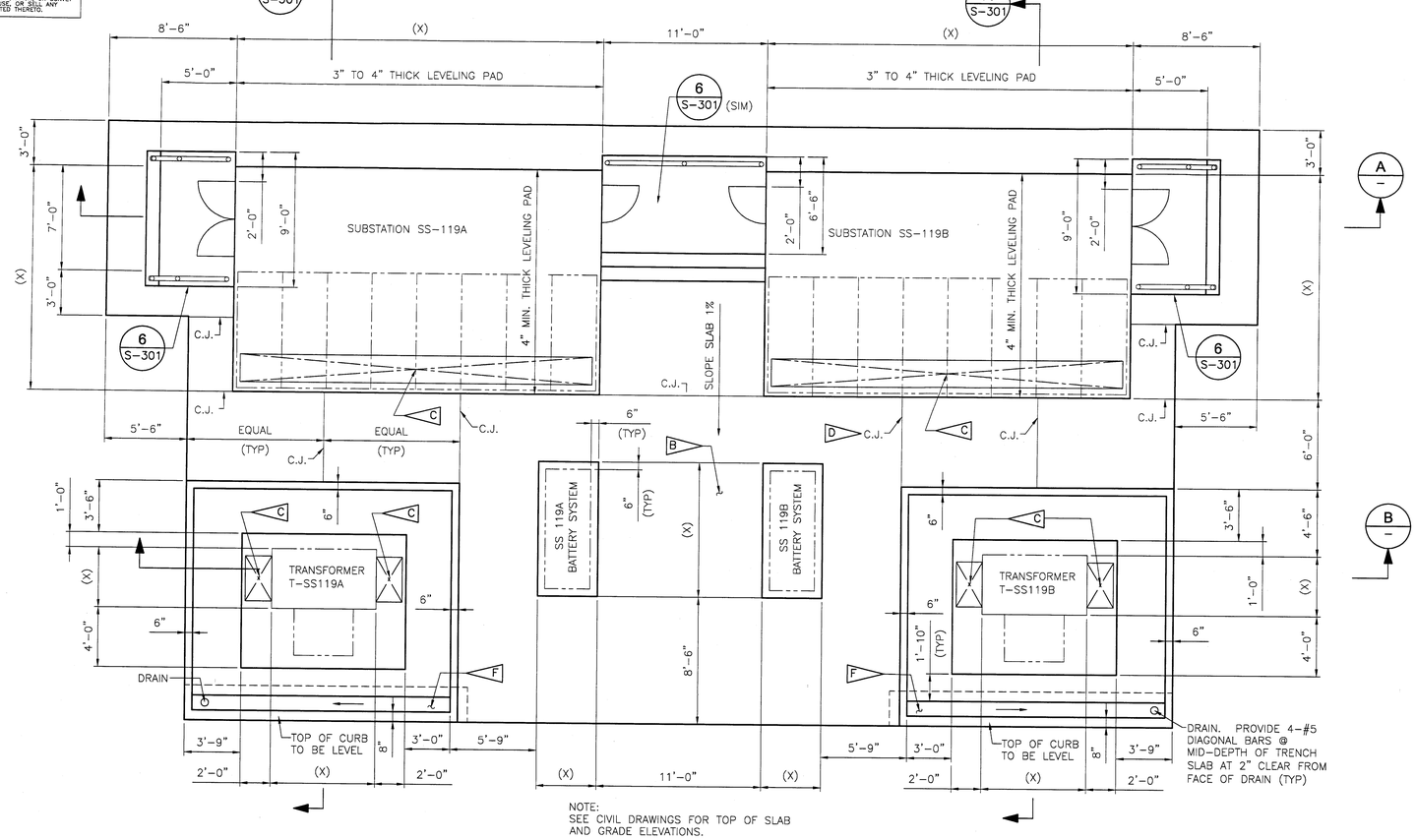

NOTE:
SEE CIVIL DRAWINGS FOR TOP OF SLAB AND GRADE ELEVATIONS.

PLAN – FOUNDATION (1 / S-101)

SCALE: 1/4" = 1'-0"

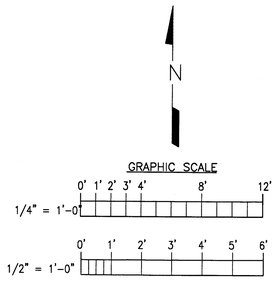

SPECIFIC NOTES:

A ALL DIMENSIONS INDICATED THUS "(X)" SHALL BE PER SUB STATION SHOP DRAWINGS.

B 9" THICK CONCRETE SLAB, REINFORCE WITH #5 @ 12" O.C. EACH WAY, TOP AND BOTTOM.

C PROVIDE OPENING AT CONDUIT LOCATIONS THROUGH FOUNDATION AND EQUIPMENT PAD. FILL WITH CONCRETE AFTER CONDUITS ARE INPLACE. SEE DETAIL "4" THIS DRAWING.

D SEE DETAILS "2" AND "3" ON S-102 FOR SLAB PLACEMENT SEQUENCE AND SLAB JOINTS

E PRE-CAST OR CAST-IN-PLACE STEPS AS REQUIRED, COORDINATE WITH BUILDING SUPPLIER.

F TRENCH SLOPES TO DRAIN.

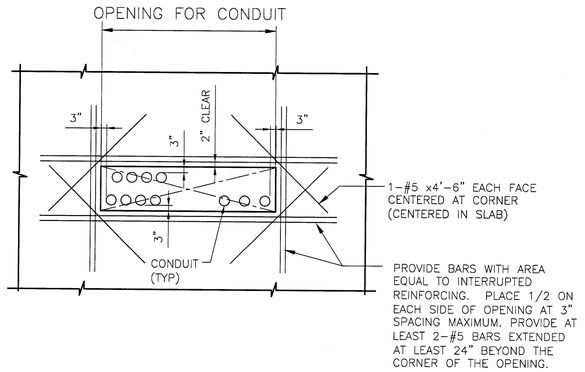

TYPICAL ADDITIONAL REINFORCING AT OPENING DETAIL (4 / –)

NOT TO SCALE

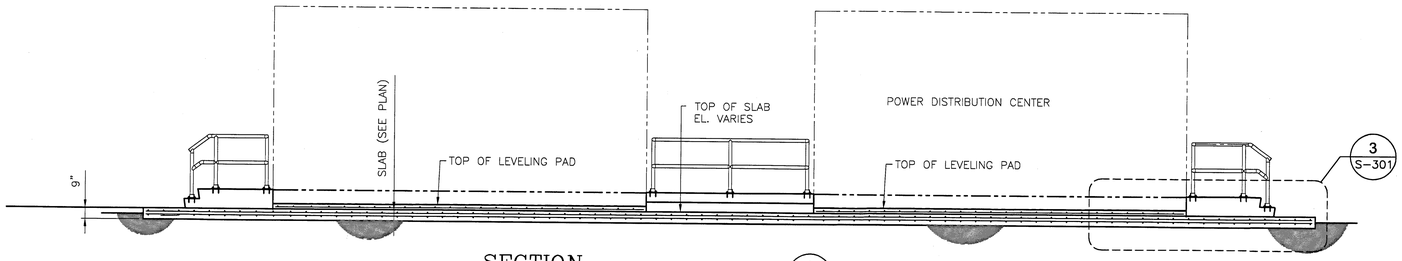

SECTION (A / S-101)

SCALE: 1/4" = 1'-0"

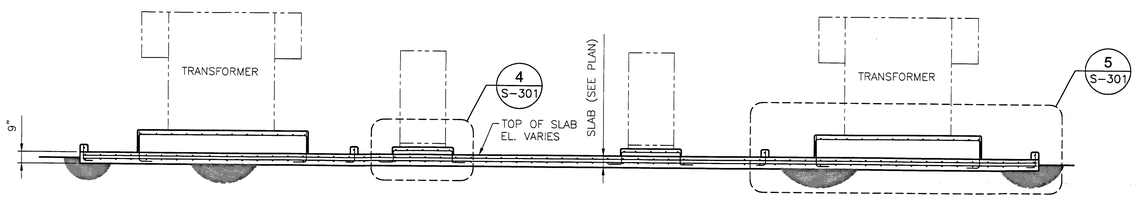

SECTION (B / S-101)

SCALE: 1/4" = 1'-0"

SYM.	ZONE	DESCRIPTION	DATE	APPROVED
		REVISIONS		

URS
7650 West Courtney Campbell Causeway
Suite 700
Tampa, Florida 33607
Ph: (813) 286-1711 Fax: (813) 286-6587
Florida Engineering Number: 000002

SIGNATURES		DATE
DRAWN	EJC	9/24/12
CHECKED	WNH	9/24/12
SUBMITTED	SAEED HASANNI	9/24/12
ST OF LICENSURE: FL		
LICENSE NO.: 42590		
APPROVED	F. WALKER	9/24/12
	S. MEHTA	9/25/12

NATIONAL AERONAUTICS AND SPACE ADMINISTRATION
JOHN F. KENNEDY SPACE CENTER, NASA
KENNEDY SPACE CENTER, FLORIDA

REVITALIZE MEDIUM VOLTAGE ELECTRICAL DISTRIBUTION SYSTEMS, INDUSTRIAL AND PAYLOAD PROCESSING AREAS

FOUNDATION SS 119A AND SS 119B PLAN AND SECTIONS

S-101

FILE NO. | SIZE F | DWG. NO. 79K39135
PCN NO. 98860 | SHEET 28

KSC FORM 1-11A (REV 6/91) (C/G 12/93)

NOTICE – WHEN GOVERNMENT DRAWINGS, SPECIFICATIONS, OR OTHER DATA ARE USED FOR ANY PURPOSE OTHER THAN IN CONNECTION WITH A DEFINITELY RELATED GOVERNMENT PROCUREMENT OPERATION, THE UNITED STATES GOVERNMENT THEREBY INCURS NO RESPONSIBILITY NOR ANY OBLIGATION WHATSOEVER; AND THE FACT THAT THE GOVERNMENT MAY HAVE FORMULATED, FURNISHED, OR IN ANY WAY SUPPLIED THE SAID DRAWINGS, SPECIFICATIONS, OR OTHER DATA IS NOT TO BE REGARDED BY IMPLICATION OR OTHERWISE AS IN ANY MANNER LICENSING THE HOLDER OR ANY OTHER PERSON OR CORPORATION, OR CONVEYING ANY RIGHTS OR PERMISSION TO MANUFACTURE, USE, OR SELL ANY PATENTED INVENTION THAT MAY IN ANY WAY BE RELATED THERETO.

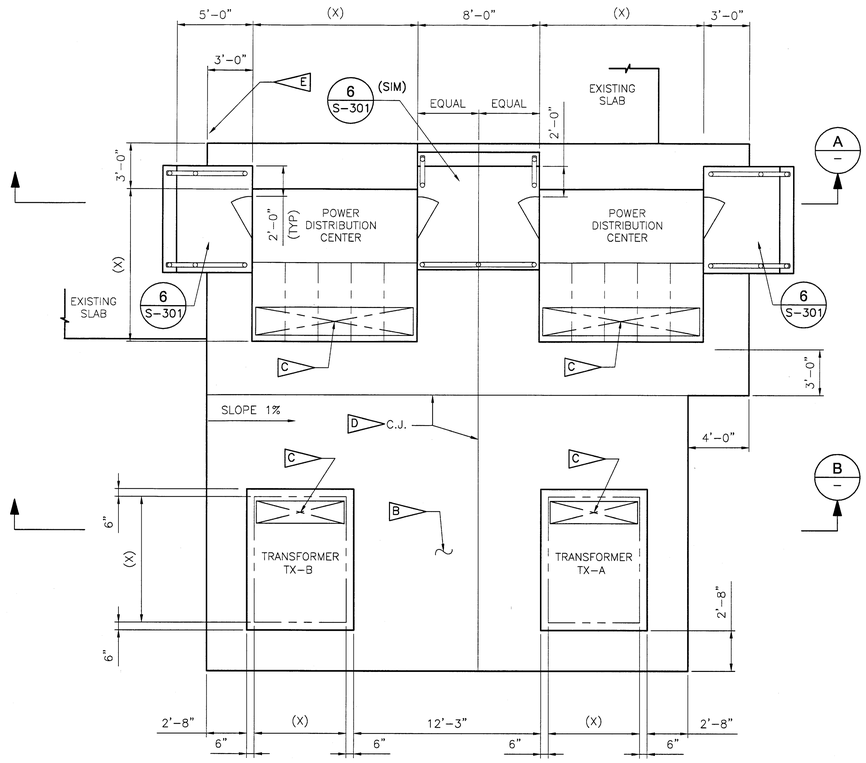

PLAN – FOUNDATION (1 / S-102)
SCALE: 1/4" = 1'-0"

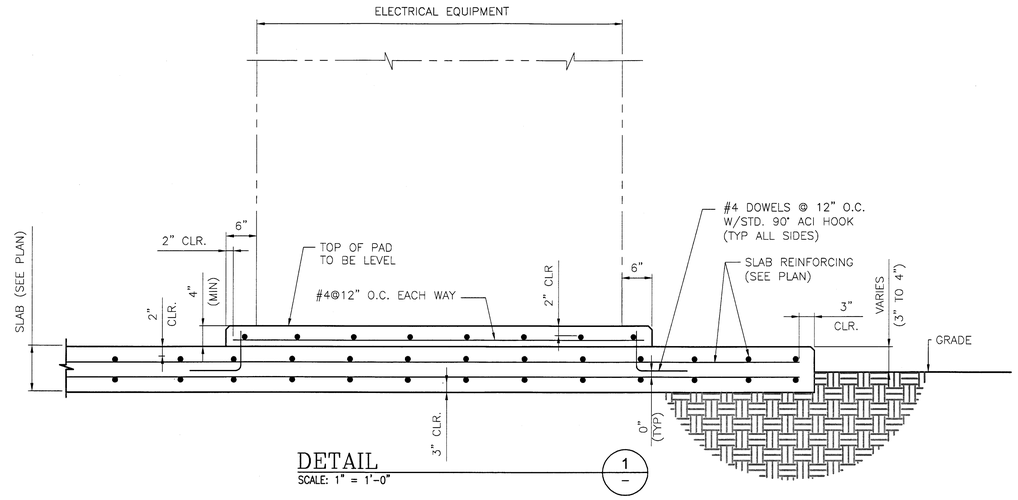

DETAIL (1 / –)
SCALE: 1" = 1'-0"

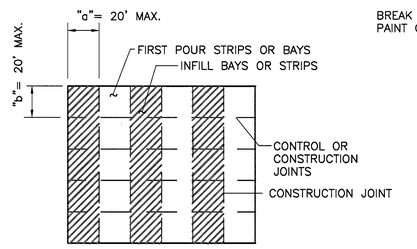

LONG STRIP CONSTRUCTION SCHEMATIC LAYOUT AND CONCRETE PLACING SEQUENCE

JOINT SPACING NOTES

1. PROVIDE CONTROL AND/OR CONSTRUCTION JOINTS SUCH THAT THE JOINT SPACING DOES NOT EXCEED 20 FEET, UNLESS OTHERWISE SHOWN ON THE DRAWING. MAINTAIN AN ASPECT RATIO: $0.80 \leq a/b \leq 1.25$
2. CONTRACTOR TO SUBMIT CONSTRUCTION AND CONTROL JOINT LAYOUT FOR APPROVAL.

TYPICAL SLAB PLACEMENT DETAIL (2 / –)
N.T.S.

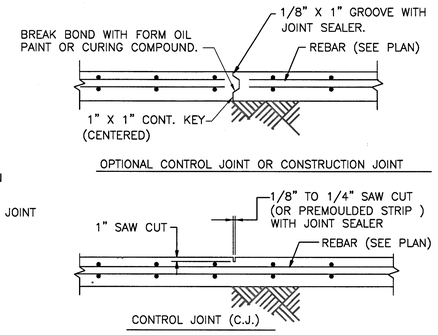

SAW CONTROL JOINT NOTES:

1. MAKE SAW CUT AS SOON AS SLAB IS ABLE TO SUPPORT WEIGHT OF WORKERS AND SAWING EQUIPMENT WITHOUT DAMAGE TO FINISH SURFACE OF SLAB. BEGIN SAW CUTTING OF SLAB WITHIN 8 HOURS OF SLAB BEING FINISHED.
2. CLEAN JOINT PRIOR TO FILLING, WITH JOINT SEALER

TYPICAL SLAB JOINT DETAILS (3 / –)
N.T.S.

N

GRAPHIC SCALE
0' 1' 2' 3' 4' 8' 12'
1/4" = 1'-0"

GRAPHIC SCALE
0' 3" 6" 9" 1' 2' 3'
1" = 1'-0"

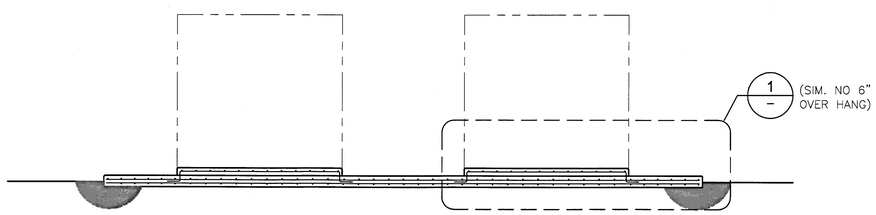

SECTION (A / S-102)
SCALE: 1/4" = 1'-0"

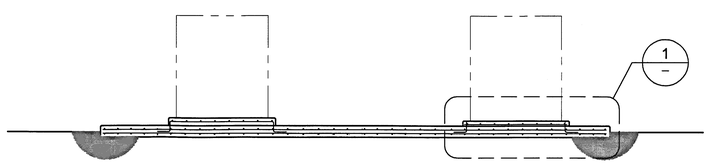

SECTION (B / S-102)
SCALE: 1/4" = 1'-0"

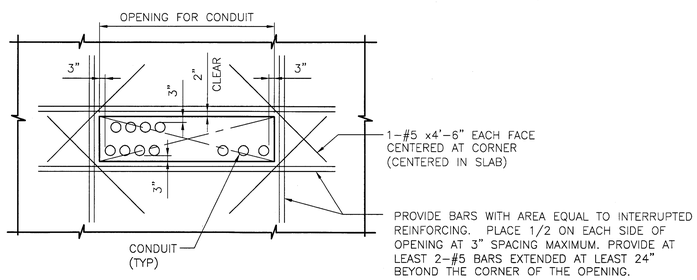

TYPICAL ADDITIONAL REINFORCING AT OPENING DETAIL (4 / –)
NOT TO SCALE

SPECIFIC NOTES:

A ALL DIMENSIONS INDICATED THUS "(X)" SHALL BE PER SUB STATION SHOP DRAWINGS.

B 9" THICK CONCRETE SLAB, REINFORCE WITH #5 @ 12" O.C. EACH WAY, TOP AND BOTTOM.

C PROVIDE OPENING AT CONDUIT LOCATIONS THROUGH FOUNDATION AND EQUIPMENT PAD. FILL WITH CONCRETE AFTER CONDUITS ARE INPLACE. SEE DETAIL "4" THIS DRAWING.

D SEE DETAILS "2" AND "3" THIS DRAWING FOR SLAB PLACEMENT SEQUENCE AND SLAB JOINTS

E PRE-CAST OR CAST-IN-PLACE STEPS AS REQUIRED, COORDINATE WITH BUILDING SUPPLIER.

SYM.	ZONE	DESCRIPTION	DATE	APPROVED
		REVISIONS		

URS
7650 West Courtney Campbell Causeway
Suite 700
Tampa, Florida 33607
Ph: (813) 286-1711 Fax: (813) 286-6587
Florida Engineering Number: 000002

SIGNATURES		DATE
DRAWN	EJC	9/24/12
CHECKED	WNH	9/24/12
SUBMITTED	Saeed Hasanni SAEED HASANNI	9/24/12
ST OF LICENSURE: FL		
LICENSE NO.: 42590		
APPROVED	F. Walker F. WALKER	9/26/12
	Sudhir Mehta S. MEHTA	9/25/12

NATIONAL AERONAUTICS AND SPACE ADMINISTRATION
JOHN F. KENNEDY SPACE CENTER, NASA
KENNEDY SPACE CENTER, FLORIDA

REVITALIZE MEDIUM VOLTAGE ELECTRICAL DISTRIBUTION SYSTEMS, INDUSTRIAL AND PAYLOAD PROCESSING AREAS

FOUNDATION SS 227A AND 227B PLAN SECTIONS, AND DETAILS

S-102

FILE NO.	SIZE	DWG. NO.
	F	79K39135
PCN NO. 98860		SHEET 29

T:\NASA KSC\Tank Inc. 1\Drawings\S-102 FOUNDATION SS A AND B PLAN AND SECTION.dwg 09/26/2012 12:24
KSC FORM 1-11A (REV 6/91) (C/G 12/93)

NOTICE – WHEN GOVERNMENT DRAWINGS, SPECIFICATIONS, OR OTHER DATA ARE USED FOR ANY PURPOSE OTHER THAN IN CONNECTION WITH A DEFINITELY RELATED GOVERNMENT PROCUREMENT OPERATION, THE UNITED STATES GOVERNMENT THEREBY INCURS NO RESPONSIBILITY NOR ANY OBLIGATION WHATSOEVER; AND THE FACT THAT THE GOVERNMENT MAY HAVE FORMULATED, FURNISHED, OR IN ANY WAY SUPPLIED THE SAID DRAWINGS, SPECIFICATIONS, OR OTHER DATA, IS NOT TO BE REGARDED BY IMPLICATION OR OTHERWISE AS IN ANY MANNER LICENSING THE HOLDER OR ANY OTHER PERSON OR CORPORATION, OR CONVEYING ANY RIGHTS OR PERMISSION TO MANUFACTURE, USE OR SELL ANY PATENTED INVENTION THAT MAY IN ANY WAY BE RELATED THERETO.

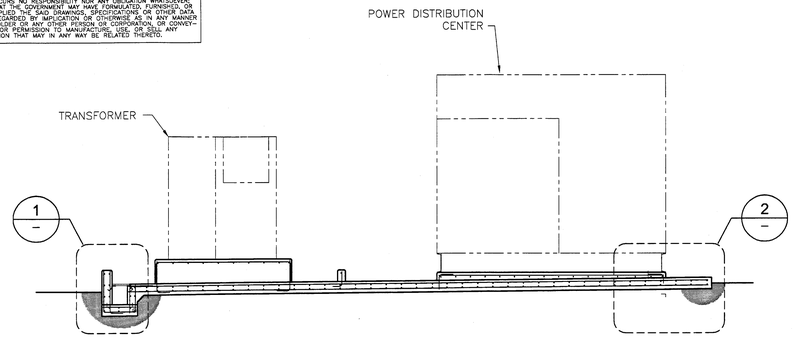

SECTION A S-101
SCALE: 1/4" = 1'-0"

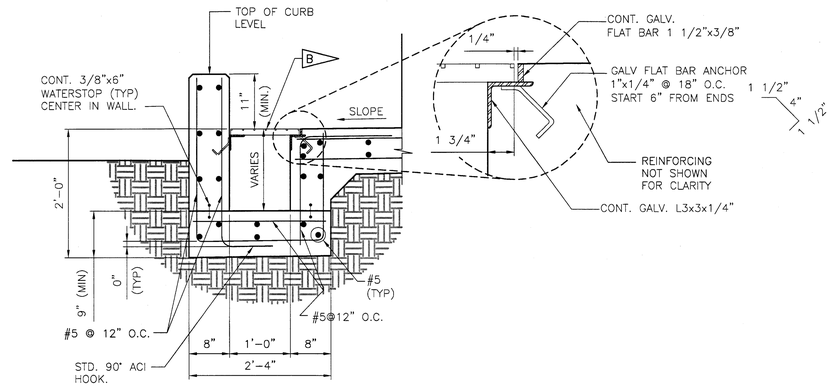

DETAIL 1
SCALE: 1" = 1'-0"

SPECIFIC NOTES:

A SEE GENERAL NOTES ON DRAWING S-001.

B GALVANIZED STEEL GRATING (McNICHOLS CO. OR APPROVED EQUAL) 1 1/2" x 3/16" BEARING BARS (1 3/16" O.C.) W/4" O.C. CROSS BARS.

C LANDING AND TREADS TO BE PAINTED WITH NON-SLIP GRAY PAINT.

D NOSING AND RISERS TO BE PAINTED WITH SAFETY YELLOW PAINT.

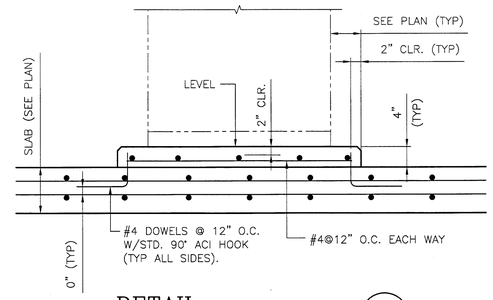

DETAIL 4 S-101
SCALE: 1" = 1'-0"

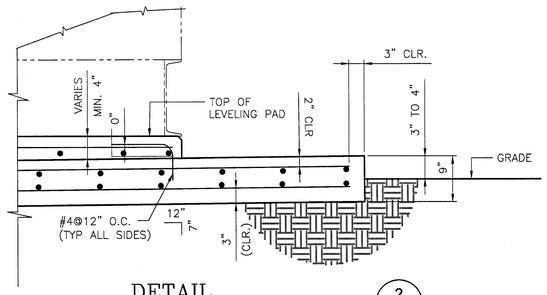

DETAIL 2
SCALE: 1" = 1'-0"

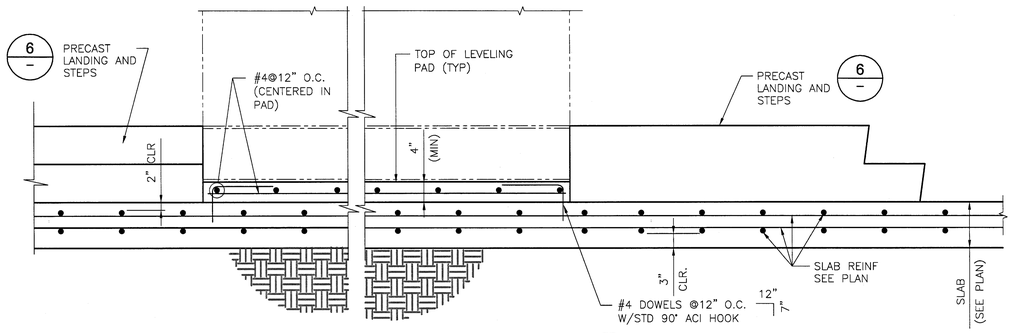

DETAIL 3 S-101
SCALE: 1" = 1'-0"

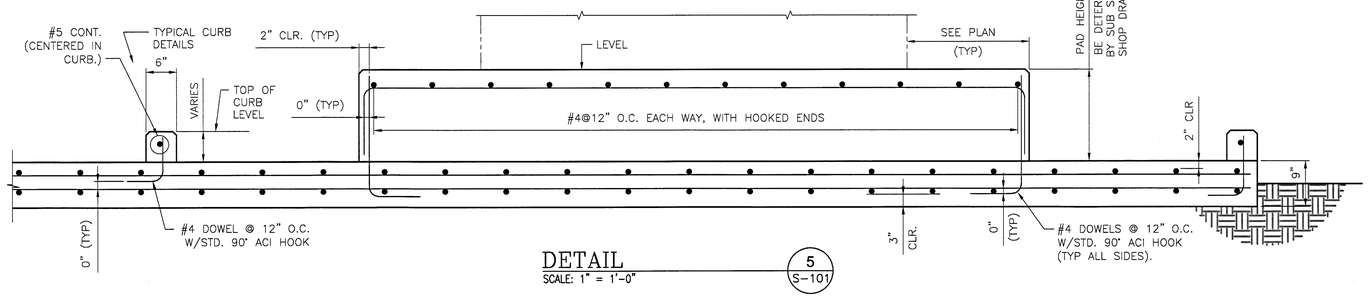

DETAIL 5 S-101
SCALE: 1" = 1'-0"

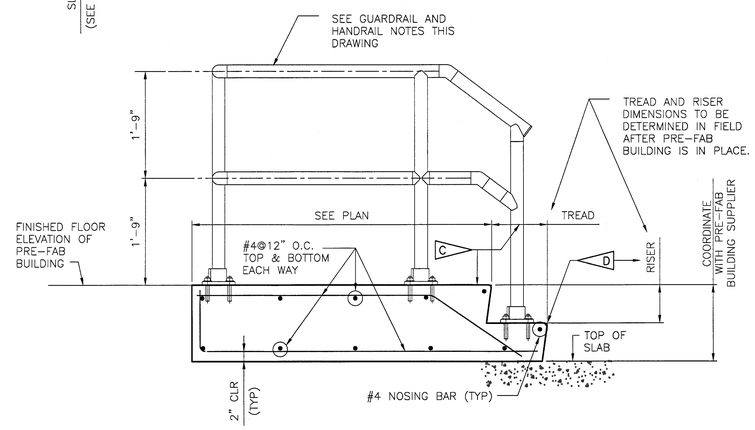

DETAIL–PRECAST STAIRS & LANDING 6 S-101 S-102
N.T.S.

GUARDRAILS AND HANDRAIL NOTES

1. Guardrails and Handrails shall be the product of a company normally engaged in the manufacture of pipe railing.
2. The handrail shall be made of pipes joined together with component fittings. Samples of all components, bases, and pipe shall be submitted for approval at the request of the engineer. Components that are pop-riveted or glued at the joints will not be acceptable. All components must be mechanically fastened with stainless steel hardware.
3. Railings shall be 2" Schedule 40 Steel pipe. Posts shall be 2" Schedule 40 Steel pipe. Post spacing shall be a maximum of 6'-0".
4. Guardrails and Handrails shall be designed to withstand a 200 lb concentrated load applied in any direction and at any point on the top rail.
5. The manufacturer shall submit calculations for approval at the request of the Engineer. Testing of base castings or base extrusions by an independent lab or manufacturer's lab (if manufacturer's lab meets the requirements of the Aluminum Association) will be an acceptable substitute for calculations. Calculations will be required for approval of all other design aspects.
6. Posts shall not interrupt the continuation of the top rail at any point along the railing, including corners and end terminations (OSHA 1910.23). The top surface of the top railing shall be smooth and shall not be interrupted by projected fittings.
7. Concrete anchors shall be stainless steel type 303 or 304 and shall be furnished by the handrail manufacturer. The anchor design shall include the appropriate reduction factors for spacing and edge distances in accordance with the manufacturer's published data.
8. Hot Dipped Galvanize the whole rail assembly.

GRAPHIC SCALE

1" = 1'-0" (0' 3" 6" 9" 1' 2' 3')

1/4" = 1'-0" (0' 1' 2' 3' 4' 8' 12')

SYM.	ZONE	DESCRIPTION	DATE	APPROVED
		REVISIONS		

URS
7650 West Courtney Campbell Causeway
Suite 700
Tampa, Florida 33607
Ph: (813) 286-1711 Fax: (813) 286-6587
Florida Engineering Number: 000002

SIGNATURES		DATE
DRAWN	EJC	9/24/12
CHECKED	WNH	9/24/12
SUBMITTED	SAEED HASANNI	9/24/12
ST OF LICENSURE: FL		
LICENSE NO.: 42590		
APPROVED	F. WALKER	9/24/12
	S. MEHTA	9/25/12

NATIONAL AERONAUTICS AND SPACE ADMINISTRATION
JOHN F. KENNEDY SPACE CENTER, NASA
KENNEDY SPACE CENTER, FLORIDA

REVITALIZE MEDIUM VOLTAGE ELECTRICAL DISTRIBUTION SYSTEMS, INDUSTRIAL AND PAYLOAD PROCESSING AREAS

SECTIONS AND DETAILS

S-301

FILE NO.	SIZE	DWG. NO.
	F	79K39135
PCN NO. 98860		SHEET 30

T:\NASA KSC\Task No. 1\Drawings\S-301 SECTIONS AND DETAILS.dwg 09/20/2012 12:04
KSC FORM 1-11A (REV 6/91) (C/G 12/93)

NOTICE – WHEN GOVERNMENT DRAWINGS, SPECIFICATIONS, OR OTHER DATA ARE USED FOR ANY PURPOSE OTHER THAN IN CONNECTION WITH A DEFINITELY RELATED GOVERNMENT PROCUREMENT OPERATION, THE UNITED STATES GOVERNMENT THEREBY INCURS NO RESPONSIBILITY NOR ANY OBLIGATION WHATSOEVER; AND THE FACT THAT THE GOVERNMENT MAY HAVE FORMULATED, FURNISHED, OR IN ANY WAY SUPPLIED THE SAID DRAWINGS, SPECIFICATIONS, OR OTHER DATA, IS NOT TO BE REGARDED BY IMPLICATION OR OTHERWISE AS IN ANY MANNER LICENSING THE HOLDER OR ANY OTHER PERSON OR CORPORATION, OR CONVEYING ANY RIGHTS OR PERMISSION TO MANUFACTURE, USE, OR SELL ANY PATENTED INVENTION THAT MAY IN ANY WAY BE RELATED THERETO.

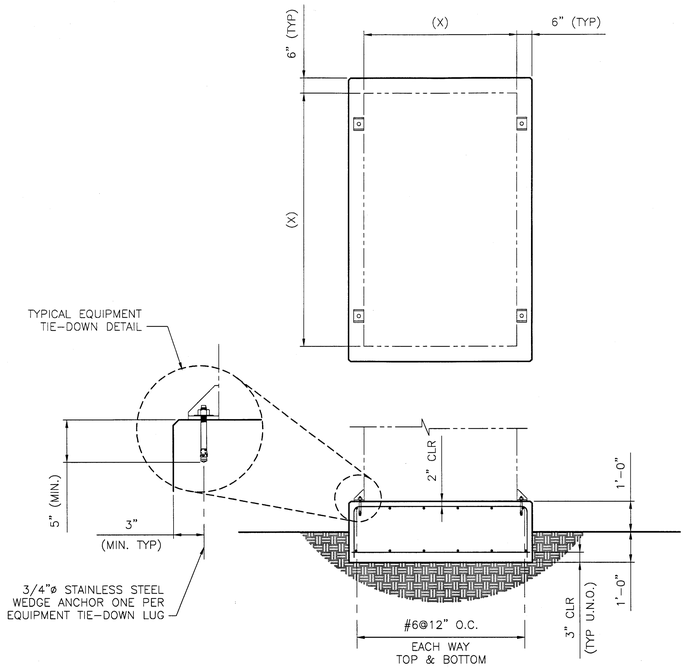

DETAIL – TYPICAL EQUIPMENT FOUNDATION ON GRADE (1/–)
NOT TO SCALE

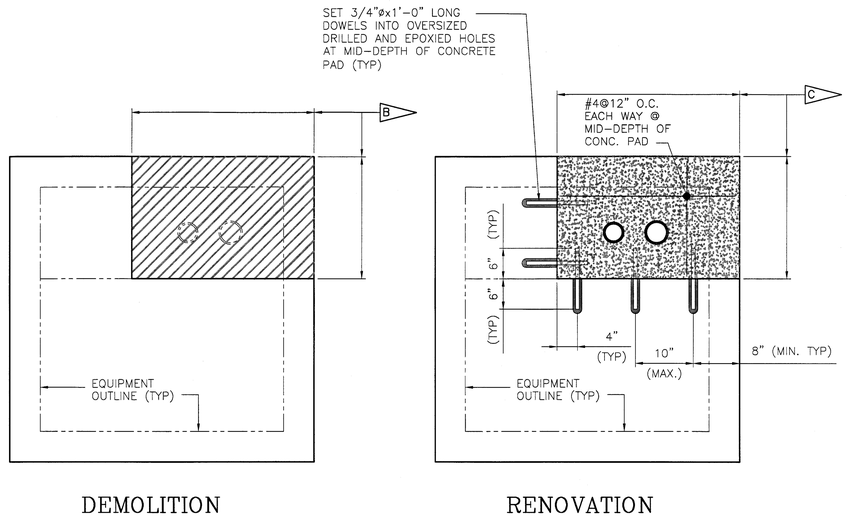

DETAIL (2/–)
NOT TO SCALE

SPECIFIC NOTES:

A ALL DIMENSIONS INDICATED THUS "(X)" SHALL BE PER SUB STATION SHOP DRAWINGS.

B DEMOLISH PORTION OF TRANSFORMER CONCRETE EQUIPMENT PAD BELOW PRIMARY TERMINATION COMPARTMENT AS REQUIRED TO PERMIT INSTALLATION OF NEW CONDUIT UP INTO TRANSFORMER PRIMARY TERMINATION COMPARTMENT. REMOVE TRANSFORMER FROM PAD AS REQUIRED TO COMPLETE WORK.

C REPLACE CONCRETE EQUIPMENT PAD CONCRETE BACK TO ORIGINAL CONDITION BY EPOXY DOWELING INTO EXISTING. RESET TRANSFORMER BACK ON CONCRETE EQUIPMENT PAD AFTER THIS WORK IS COMPLETE, AND CONCRETE SLAB ATTAINS 80% OF THE SPECIFIED 28-DAY CONCRETE STRENGTH. PLACE TRANSFORMER BACK INTO SERVICE.

GRAPHIC SCALE
0' 3" 6" 9" 1' 2' 3'
1" = 1'-0"

S-302

SYM.	ZONE	DESCRIPTION	DATE	APPROVED
		REVISIONS		

URS
7650 West Courtney Campbell Causeway
Suite 700
Tampa, Florida 33607
Ph: (813) 286-1711 Fax: (813) 286-6587
Florida Engineering Number: 000002

SIGNATURES		DATE
DRAWN	EJC	9/24/12
CHECKED	WNH	9/24/12
SUBMITTED SAEED HASANNI		9/24/12
ST OF LICENSURE: FL		
LICENSE NO.: 42590		
APPROVED F. WALKER		9/24/12
S. MEHTA		9/25/12

NATIONAL AERONAUTICS AND SPACE ADMINISTRATION
JOHN F. KENNEDY SPACE CENTER, NASA
KENNEDY SPACE CENTER, FLORIDA

REVITALIZE MEDIUM VOLTAGE ELECTRICAL DISTRIBUTION SYSTEMS, INDUSTRIAL AND PAYLOAD PROCESSING AREAS

SECTIONS AND DETAILS

FILE NO.	SIZE	DWG. NO.
	F	79K39135
PCN NO. 98860		SHEET 31

I:\NASA KSC\Task NO. 1\Drawings\S-302 SECTIONS AND DETAILS.dwg 09/20/2012 12:04

KSC FORM 1-11A (REV 6/91) (C/G 12/93)

NOTICE – WHEN GOVERNMENT DRAWINGS, SPECIFICATIONS, OR OTHER DATA ARE USED FOR ANY PURPOSE OTHER THAN IN CONNECTION WITH A DEFINITELY RELATED GOVERNMENT PROCUREMENT OPERATION, THE UNITED STATES GOVERNMENT THEREBY INCURS NO RESPONSIBILITY NOR ANY OBLIGATION WHATSOEVER; AND THE FACT THAT THE GOVERNMENT MAY HAVE FORMULATED, FURNISHED, OR IN ANY WAY SUPPLIED THE SAID DRAWINGS, SPECIFICATIONS, OR OTHER DATA IS NOT TO BE REGARDED BY IMPLICATION OR OTHERWISE AS IN ANY MANNER LICENSING THE HOLDER OR ANY OTHER PERSON OR CORPORATION, OR CONVEYING ANY RIGHTS OR PERMISSION TO MANUFACTURE, USE, OR SELL ANY PATENTED INVENTION THAT MAY IN ANY WAY BE RELATED THERETO.

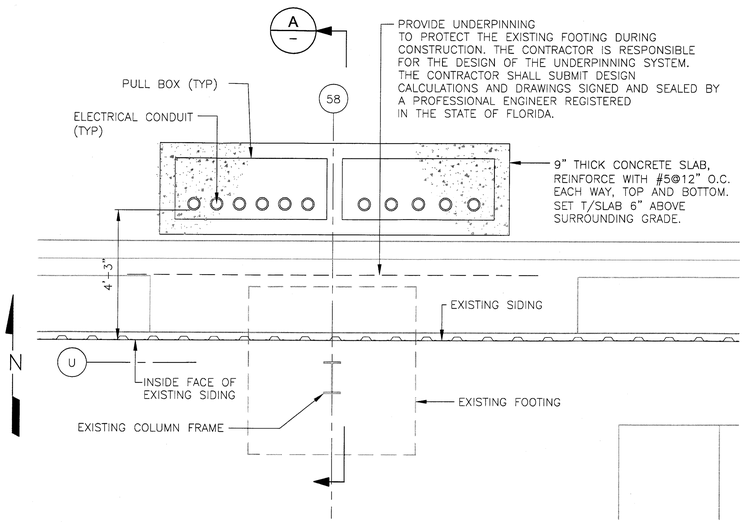

PLAN – AT EXISTING FOUNDATION (1 / S-401)
SCALE: 1/2" = 1'-0"

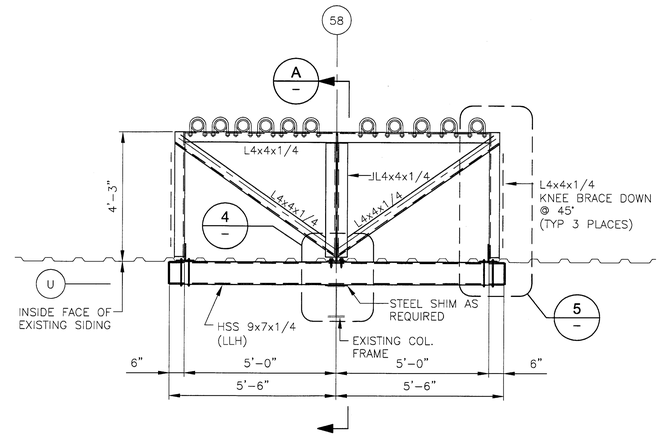

PLAN – AT SUPPORT FRAME (2 / S-401)
SCALE: 1/2" = 1'-0"

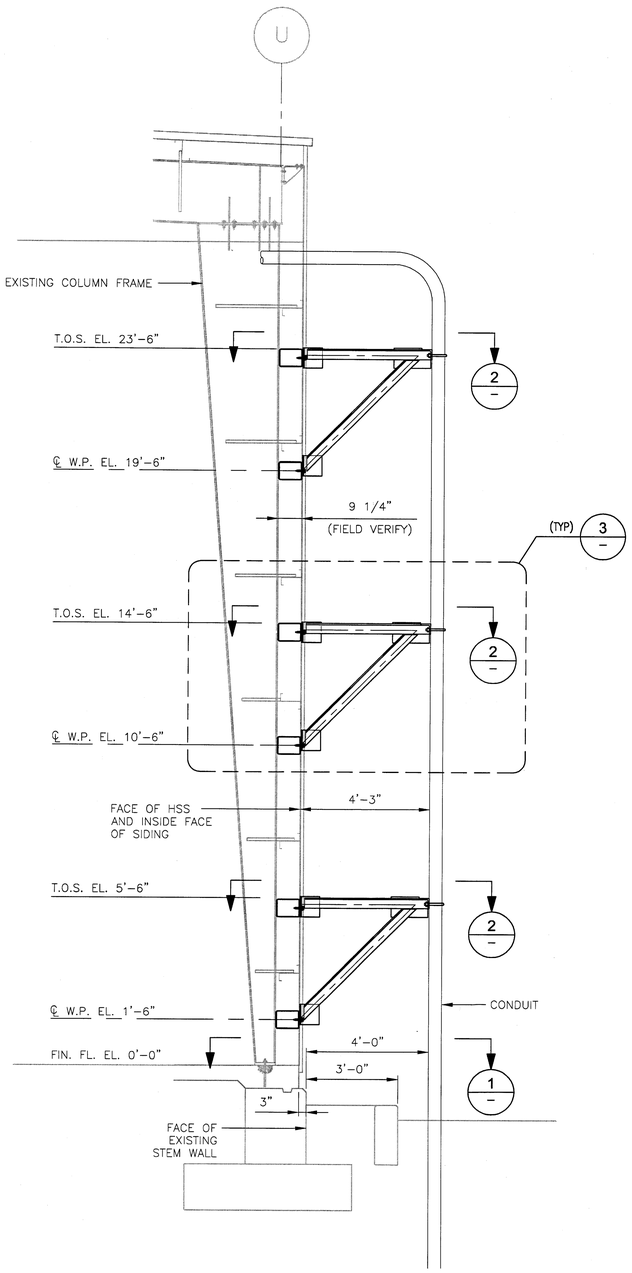

SECTION (A / S-401)
SCALE: 1/2" = 1'-0"

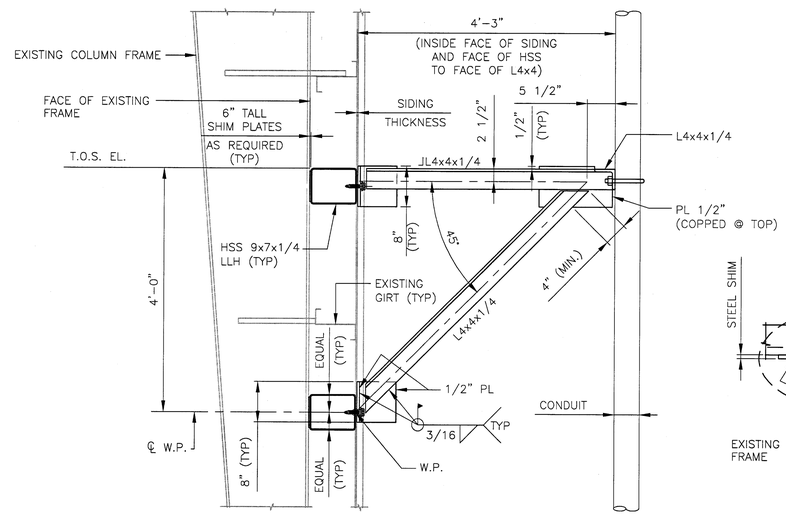

DETAIL (3 / S-401)
SCALE: 1" = 1'-0"

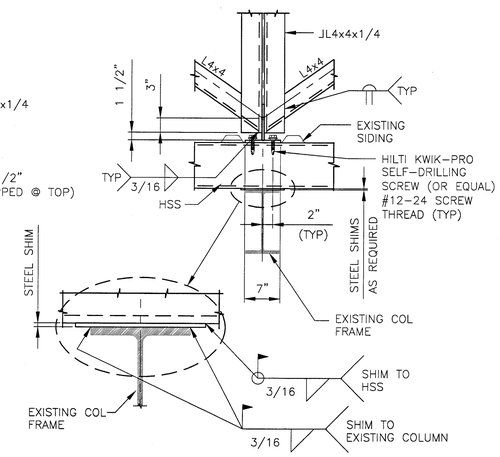

DETAIL (4 / S-401)
SCALE: 1" = 1'-0"

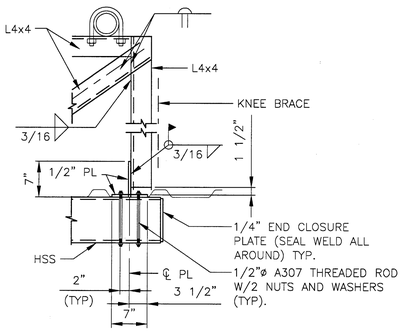

DETAIL (5 / S-401)
SCALE: 1" = 1'-0"

GRAPHIC SCALE

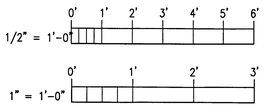

SYM.	ZONE	DESCRIPTION	DATE	APPROVED
		REVISIONS		

URS
7650 West Courtney Campbell Causeway
Suite 700
Tampa, Florida 33607
Ph: (813) 286-1711 Fax: (813) 286-6587
Florida Engineering Number: 0000002

SIGNATURES		DATE
DRAWN	EJC	9/24/12
CHECKED	WNH	9/24/12
SUBMITTED	SAEED HASANNI	9/24/12
ST OF LICENSURE: FL		
LICENSE NO.: 42590		
APPROVED	F. WALKER	9/24/12
	S. MEHTA	9/25/12

NATIONAL AERONAUTICS AND SPACE ADMINISTRATION
JOHN F. KENNEDY SPACE CENTER, NASA
KENNEDY SPACE CENTER, FLORIDA

REVITALIZE MEDIUM VOLTAGE ELECTRICAL DISTRIBUTION SYSTEMS, INDUSTRIAL AND PAYLOAD PROCESSING AREAS

IACP (M7-407) NORTH WALL CONDUIT SUPPORT

S-401

FILE NO.	SIZE	DWG. NO.
	F	79K39135
PCN NO. 98860		SHEET 32

I:\NASA KSC\Vol. No. 1\Drawings\S-401 IACP (M7-407) NORTH WALL CONDUIT SUPPORT.dwg 09/26/2012 12:04
KSC FORM 1-11A (REV 6/91) (C/G 12/93)

NOTICE – WHEN GOVERNMENT DRAWINGS, SPECIFICATIONS, OR OTHER DATA ARE USED FOR ANY PURPOSE OTHER THAN IN CONNECTION WITH A DEFINITELY RELATED GOVERNMENT PROCUREMENT OPERATION, THE UNITED STATES GOVERNMENT THEREBY INCURS NO RESPONSIBILITY NOR ANY OBLIGATION WHATSOEVER; AND THE FACT THAT THE GOVERNMENT MAY HAVE FORMULATED, FURNISHED, OR IN ANY WAY SUPPLIED THE SAID DRAWINGS, SPECIFICATIONS OR OTHER DATA IS NOT TO BE REGARDED BY IMPLICATION OR OTHERWISE AS IN ANY MANNER LICENSING THE HOLDER OR ANY OTHER PERSON OR CORPORATION, OR CONVEYING ANY RIGHTS OR PERMISSION TO MANUFACTURE, USE, OR SELL ANY PATENTED INVENTION THAT MAY IN ANY WAY BE RELATED THERETO.

GENERAL NOTES:

1. ALL ELECTRICAL WORK AND MATERIAL, IS NEW AND SHALL BE PROVIDED BY THE CONTRACTOR.
2. UNLESS OTHERWISE INDICATED, PROVIDE SHALL MEAN TO FURNISH AND INSTALL.
3. CONDUIT AND CABLE ROUTINGS ARE SHOWN DIAGRAMMATICALLY. ACTUAL ROUTINGS SHALL BE DETERMINED BY CONTRACTOR TO SUIT EXISTING FIELD CONDITIONS.
4. THE CONTRACTOR SHALL EXERCISE CAUTION WHEN EXCAVATING AND OBTAIN AN EXCAVATION PERMIT PRIOR TO ANY EXCAVATIONS. LOCATION AND DEPTH OF UNDERGROUND UTILITIES HAVE BEEN LOCATED BY REFERRING TO ALL KNOWN RECORD DRAWINGS, BY CONFERRING WITH PUBLIC WORKS PERSONNEL TOPOGRAPHIC SURVEY BY VISUAL OBSERVATIONS ALONG THE ROUTE AND BY THE USE OF UNDERGROUND LOCATORS. CONTRACTOR SHALL EXERCISE CAUTION AND HAND DIG IN VICINITY OF ALL BURIED UTILITIES. UNDERGROUND UTILITIES MAY EXIST WHICH ARE NOT INDICATED ON THE DRAWINGS. EXACT LOCATION OF BURIED UTILITIES SHALL BE NOTED BY THE CONTRACTOR ON "AS–BUILT" DRAWINGS.
5. THE CONTRACTOR SHALL EXERCISE EXTREME CAUTION DURING CABLE INSTALLATION AND SPLICING IN THE EXISTING MANHOLES. THE MANHOLES CONTAIN ENERGIZED CIRCUITS (13.2KV & 13.8KV) THAT MUST REMAIN IN SERVICE. ANY REQUIRED OUTAGES SHALL BE COORDINATED WITH THE GOVERNMENT. ALL CABLES TO BE HANDLED OR CUT SHALL BE IDENTIFIED BY ELECTRONIC TRACING MEANS UNDER AN OUTAGE.
6. CONTRACTOR SHALL CONTACT THE CONTRACTING OFFICER PRIOR TO ALL VLF TESTS OF CABLE.
7. 15KV CABLE SHALL <u>NOT</u> BE PUT ON THE GROUND AT ANY TIME DURING HANDLING, REMOVING OR INSTALLATION.
8. NO OUTAGES OF FACILITIES SHALL BE PERMITTED UNLESS APPROVED BY CONTRACTING OFFICER. ISC SHALL PROVIDE SWITCHING TO DIVERT POWER AND DE–ENERGIZE A FEEDER OR PRIOR TO REMOVAL OF ANY CABLE OR EQUIPMENT. THE GOVERNMENT SHALL SUPPLY GENERATOR SUPPORT FOR APPROVED OUTAGES.
9. THE CONTRACTOR SHALL TEST TRANSFORMER OIL FOR PCB'S PRIOR TO REMOVAL. TRANSFORMER OIL SHALL NOT BE HANDLED OR THE TRANSFORMER REMOVED UNTIL OIL SAMPLE RESULTS HAVE BEEN SUBMITTED TO THE GOVERNMENT AND APPROVED . THE CONTRACTOR SHALL DRAIN THE TRANSFORMER OIL INTO GOVERNMENT PROVIDED CONTAINERS WHICH WILL BE REMOVED FROM THE SITE BY THE GOVERNMENT. THE CONTRACTOR SHALL TRANSPORT THE TRANSFORMER TO THE GOVERNMENT'S RANSOM ROAD SITE. IF TEST RESULTS SHOW PCB'S CONTAMINATION, CONTRACTOR SHALL ADHERE TO SPECIFICATIONS, AS WELL AS FOLLOW STATE AND FEDERAL GUIDELINES FOR TRANSPORTING PCB LADEN EQUIPMENT.
10. ALL EXTERIOR ENCLOSURES SHALL BE NEMA 4X STAINLESS STEEL, UNLESS NOTED OTHERWISE.
11. REPLACE SHALL MEAN TO REMOVE EXISTING AND PROVIDE NEW UNLESS NOTED AS GFE.
12. WHERE NEW EQUIPMENT TO BE INSTALLED DOES NOT OCCUPY THE SAME PHYSICAL LOCATION AS THE EXISTING EQUIPMENT TO BE REMOVED, THE CONTRACTOR SHALL HAVE ALL NEW SYSTEMS AND EQUIPMENT INSTALLED, TESTED AND PREPARED FOR ENERGIZING BEFORE REMOVING INDICATED EXISTING EQUIPMENT. WHERE THE NEW EQUIPMENT IS TO OCCUPY THE SAME PHYSICAL LOCATION AS THE EXISTING EQUIPMENT, CONTRACTOR SHALL INSTALL AS MUCH OF THE NEW SYSTEM AS PRACTICAL WITHOUT AN OUTAGE. ALL NEW EQUIPMENT SHALL BE ON SITE AND TESTED PRIOR TO AN OUTAGE ON ANY SYSTEM OR EQUIPMENT. COORDINATE ANY REQUIRED OUTAGES WITH THE GOVERNMENT PRIOR TO THE REMOVAL OF THE EXISTING EQUIPMENT.
13. PROVIDE IDENTIFICATION PLATES FOR ALL NEW EQUIPMENT INDICATING; NAME, VOLTAGE, AMPERAGE, SOURCE AND SERVICE.
14. MAINTAIN VEHICULAR AND PEDESTRIAN TRAFFIC IN ACCORDANCE WITH FHWA, PART II, DURING THE CONSTRUCTION OF THE WORK BY KEEPING OPEN VEHICULAR TRAFFIC LANES OR BY PROVIDING DETOUR ROUTES. BARRICADE TRAFFIC LANES AND DETOUR ROUTES AND POST WITH WARNING SIGNS FOR SAFETY AND DIRECTING TRAFFIC. PROVIDE WARNING LIGHTS DURING HOURS OF DARKNESS, IN ACCORDANCE WITH DOT. SUBMIT TRAFFIC PLAN FOR APPROVAL.
15. THE CONTRACTOR SHALL NOTIFY THE CONTRACTING OFFICER 14 WORKING DAYS PRIOR TO AN OUTAGE THAT WILL REQUIRE TESTING FOR PHASING AND PHASE ROTATION OF 15KV MEDIUM VOLTAGE ELECTRICAL SYSTEMS. THE ISC SHALL IDENTIFY AND TAG THE PHASING AT EQUIPMENT AND SHALL PROVIDE TO THE CONTRACTOR, IN WRITING, THE RESULTS OF PHASING AND PHASE ROTATION TESTS. THE CONTRACTOR SHALL BE RESPONSIBLE FOR MAINTAINING THE PHASING, AND SHALL MATCH THE EXISTING PHASE ROTATION AND PHASING WHEN INSTALLING CONDUCTORS IN EXISTING ELECTRICAL SYSTEMS.
16. THE CONTRACTOR SHALL BE RESPONSIBLE FOR VERIFYING THE EXISTING PHASE ROTATION AND PHASING OF THE EXISTING ELECTRICAL SYSTEMS OF 600 VOLTS AND BELOW, PRIOR TO THE REMOVAL OF ANY EQUIPMENT OR CONDUCTORS. THE CONTRACTOR SHALL PROVIDE QUALIFIED PERSONNEL, PERSONNEL PROTECTIVE EQUIPMENT, AND APPROPRIATE LOW VOLTAGE TESTING EQUIPMENT REQUIRED TO SAFELY PERFORM THIS PHASING. THE CONTRACTOR SHALL MATCH THE EXISTING PHASE ROTATION AND PHASING WHEN INSTALLING EQUIPMENT OR CONDUCTORS IN EXISTING ELECTRICAL SYSTEMS. IF EXISTING COLOR CODING DOES NOT MATCH PHASE ROTATION. FOUND, CONTRACTOR SHALL NOTIFY CONTRACTING OFFICER.
17. CONTRACTOR SHALL VERIFY CABLE ROUTING AND CIRCUIT NUMBERS PRIOR TO PERFORMING ANY WORK ON THAT CABLE.
18. AS A RESULT OF PAST CABLE REPLACEMENT PROJECTS, IT HAS BEEN DETERMINED THAT MANY OF THE PULLING EYES IN ELECTRICAL POWER MANHOLES ARE NO LONGER RELIABLE. CONTRACTOR SHALL USE ALTERNATIVE METHODS FOR REMOVING AND INSTALLING CABLE WHERE REQUIRED.
19. WHEN EQUIPMENT IDENTIFICATIONS CHANGE, CONTRACTOR SHALL RETAG CABLE IN ALL MANHOLES IN THE CABLE ROUTE AND AT ALL EQUIPMENT. SEE CIRCUIT IDENTIFICATION TAG DETAIL 2 ON DWG. E–512.
20. ALL MEASUREMENTS SHOWN ON DRAWINGS ARE APPROXIMATE. CONTRACTOR SHALL VERIFY ALL MEASUREMENTS PRIOR TO ORDERING MATERIALS.
21. ALL WATERS DISCHARGED TO GRADE SHALL BE DIRECTED TO AN UPLAND AREA TO ALLOW THE WATER TO PERCOLATE BACK INTO THE GROUND. OTHER REQUIREMENTS FOR INDIVIDUAL LOCATIONS WILL BE NOTED ON PLAN DRAWINGS.
22. IF LEAD MATERIALS ARE TO BE DISTURBED, THE CONTRACTOR MUST SUPPLY A SITE SPECIFIC HEALTH AND SAFETY PLAN DESCRIBING ACTIONS THAT WILL BE TAKEN TO ASSURE PROTECTION OF WORKERS, ADJACENT, UNPROTECTED PERSONNEL, AND COMPLIANCE WITH 29 CFR 1926.62. WHERE LEAD CABLES ARE CUT AND/OR REMOVED, PROPER REMOVAL PROCEDURES SHALL BE OBSERVED TO MINIMIZE EXPOSURE TO LEAD DUST. WHERE LEAD CABLE IS CUT, CABLE SHALL BE PROPERLY SEALED.

GENERAL NOTES:

23. WHERE ORANGEBURG MATERIAL OR DEBRIS IS ENCOUNTERED IN MANHOLES OR IS THE PRODUCT OF EXISTING ORANGEBURG DUCT CLEANING, THE CONTRACTOR SHALL PROVIDE APPROPRIATE PERSONNEL PROTECTION EQUIPMENT (PPE) AND PROPER FIELD SANITATION FACILITIES AS REQUIRED BY KSC. PREVENT ACCUMULATION OF SOLID DEBRIS AT THE WORK SITE. EFFLUENT FROM DEWATERING ACTIVITIES REQUIRED TO CLEAN THE DEBRIS MUST BE CONTAINERIZED USING A FILTER MECHANISM TO CAPTURE ANY SOLID DEBRIS ASSOCIATED WITH CLEAN OUT. ANY SOLID MATERIAL THAT IS ACCUMULATED FROM THIS ACTIVITY SHALL BE CONTAINERIZED AND DISPOSED OF PER KNPR 8500.1. CONTAINERS WILL BE PROVIDED AND REMOVED FROM THE JOB SITE BY KSC. CONTAINERS SHALL BE PROVIDED BY THE GOVERNMENT AND REMOVED FROM THE SITE BY KSC WASTE MANAGEMENT FOR PROPER DISPOSAL.
24. ASBESTOS CONTAINING MATERIALS, INCLUDING WOVEN OR FIBROUS MEDIUM VOLTAGE CABLE INSULATION OR FIREPROOFING MATERIALS, MAY BE IN SOME MANHOLE AFFECTED BY THIS PROJECT. IF ASBESTOS IS SUSPECTED, NOTIFY THE CONTRACTING OFFICER IMMEDIATELY TO REQUEST SAMPLING, AND DO NOT CUT OR DISTURB THE MATERIAL. IF ASBESTOS IS FOUND TO BE PRESENT APPROPRIATE WORK PRACTICES, ENGINEERING CONTROLS, PPE (ELECTRICAL AND ASBESTOS HAZARD), AND HAZARDOUS WASTE DISPOSAL WILL BE REQUIRED TO INSURE ADEQUATE PROTECTION OF PERSONNEL PERFORMING WORK. ALL WORKING INVOLVING HANDLING, DISTURBANCE, OR REMOVAL OF IDENTIFIED OR SUSPECTED ASBESTOS CONTAINING MATERIALS MUST HAVE A WORK PLAN SIGNED BY A FLORIDA LICENSED ASBESTOS CONSULTANT AND IMPLEMENTED BY A FLORIDA ASBESTOS CONTRACTOR IN ACCORDANCE WITH THE REQUIREMENTS OF THIS CONTRACT.
25. WHERE PILC CABLES ARE INDICATED TO BE REMOVED, THE CONTRACTOR SHALL REMOVE THE PILC CABLES FROM THE RACEWAY SYSTEM, SHALL IMMEDIATELY SEAL CUT ENDS OF REMOVED PILC CABLE TO PREVENT OIL LEAKAGE, SHALL THEN IMMEDIATELY TRANSPORT REMOVED PILC CABLES TO THE DESIGNATED KSC CABLE STORAGE AREA, AND SHALL NEATLY COIL UP REMOVED CABLES ON TOP OF A SINGLE CONTIGUOUS NON–SPLICED SHEET OF APPROVED VISQUEEN MATERIAL. IN NO CASE SHALL COILS OF REMOVED CABLES SPAN MORE THAN ONE SHEET OF VISQUEEN MATERIAL. SHEETS OF VISQUEEN MATERIAL WITH HOLES OR TEARS SHALL NOT BE USED. VISQUEEN MATERIAL SHALL BE 10 MIL STRING REINFORCED CLEAR TYPE. THE CONTRACTOR SHALL FOLLOW THE CONTRACT REQUIREMENTS FOR ASBESTOS ABATEMENT FOR THE PORTIONS OF THE REMOVED PILC CABLES THAT ARE COVERED WITH FIREPROOFING TAPE. THE CONTRACTOR SHALL CUT OFF A SECTION OF EACH REMOVED PILC CABLE, AND SHALL HAVE THESE SECTIONS TESTED FOR PCB CONTAMINATION. REMOVED PILC CABLES SHALL NOT BE MOVED FROM THE DESIGNATED KSC CABLE STORAGE AREA UNTIL THE CONTRACTOR SUBMITS DOCUMENTATION TO THE GOVERNMENT DEMONSTRATING THAT THE PILC CABLES DO NOT REPRESENT A PCB HAZARD, AND RECEIVES WRITTEN APPROVAL FROM THE GOVERNMENT TO MOVE THE PILC CABLES FROM THE DESIGNATED KSC CABLE STORAGE AREA. REMOVED PILC CABLES THAT TEST RESULTS INDICATE REPRESENT A PCB HAZARD, SHALL BE TRANSPORTED TO THE GOVERNMENT'S RANSOM ROAD SITE BY THE CONTRACTOR AND TURNED OVER TO THE GOVERNMENT FOR DISPOSAL BY THE GOVERNMENT. REMOVED PILC CABLES THAT TEST RESULTS INDICATE REPRESENT A PCB HAZARD SHALL BE HANDLED IN ACCORDANCE WITH THE REQUIREMENTS OF THE SPECIFICATIONS, AS WELL AS STATE AND FEDERAL GUIDELINES FOR TRANSPORTING PCB LADEN MATERIALS.
26. MATERIALS INDICATED TO BE "GALVANIZED STEEL" SHALL BE GALVANIZED VIA THE HOT DIPPED GALVANIZING PROCESS.
27. WHERE EXISTING CONDUITS ENTERING MANHOLES ARE BEING DEMOLISHED, FILL ALL UNUSED END BELLS WITH GROUT.

CONSTRUCTION PHASING NOTES: SUBSTATION SS119 REPLACEMENT:

1. INSTALL NEW LBS–73 AND LBS–74 AS INDICATED ON DETAIL 2 OF DWG. E–406.
2. DURING FIRST PRE–SCHEDULED OUTAGES TO EXISTING SS–119:
   CUT EXISTING CONDUCTORS (AP, AR, AS AND AT) IN MANHOLE MHP–70,
   PROVIDE NEW CONDUCTORS (41 AND 42) BETWEEN MHP–70 (SPLICE) AND LBS–73,
   PROVIDE NEW CONDUCTORS (43 AND 44) BETWEEN MHP–70 (SPLICE) AND LBS–74,
   PROVIDE NEW CONDUCTORS (49 AND 50) BETWEEN LBS–73 AND MHP–69 (SPLICE),
   PROVIDE NEW CONDUCTORS (51 AND 52) BETWEEN LBS–74 AND MHP–69 (SPLICE),
   RE–ENERGIZE EXISTING SS–119.
3. INSTALL NEW CONDUCTORS (45 AND 46) BETWEEN LBS–73 AND NEW SS–119.
4. INSTALL NEW CONDUCTORS (47 AND 48) BETWEEN LBS–74 AND NEW SS–119.
5. ENERGIZE NEW SUBSTATION SS–119.
6. TRANSFER IACP LOADS FROM EXISTING SUBSTATION SS–119 TO NEW SUBSTATION SS–119. RE–LOCATE LOADS ONE AT A TIME DURING PRE–SCHEDULED OUTAGES.
7. DEMOLISH EXISTING SUBSTATION SS–119.

SUBSTATIONS SS–B THRU SS–F REPLACEMENT:

1. DEMOLISH EXISTING SUBSTATIONS SS–B AND SS–C, REFER TO DWG. E–412 FOR ADDITIONAL REQUIREMENTS.
2. REMOVE PRIMARY CONDUCTORS 'AM' AND 'AN' BETWEEN VFI–63 / VFI–65 AND SS–B / SS–C.
3. PROVIDE NEW DUCT BANK BETWEEN EXISTING VFI–63, –65 AND NEW TRANSFORMERS T–SS227A AND T–SS227B.
4. EXTEND O&C SOUTH EQUIPMENT PAD.
5. PROVIDE NEW PAD–MOUNT TRANSFORMERS T–SS227A AND T–SS227B AND SUBSTATIONS SS–227A AND SS–227B. PROVIDE NEW CABLES.
6. PROVIDE ELECTRICAL RACK WITH PNL B2 AND B3.
7. TRANSFER DOWNSTREAM LOADS FROM EXISTING SUBSTATIONS SS–D, SS–E, AND SS–F TO NEW SUBSTATIONS SS–227A AND SS–227B. RE–LOCATE LOADS ONE AT A TIME DURING PRE–SCHEDULED OUTAGES.
8. DEMOLISH EXISTING SUBSTATIONS SS–D, SS–E, AND SS–F, REFER TO DWG. E–412 FOR ADDITIONAL REQUIREMENTS.

ABBREVIATIONS:

4X SS	NEMA 4X STAINLESS STEEL
AIP	ABANDONED IN PLACE
AWG	AMERICAN WIRE GAUGE
ATC	AIR TERMINAL COMPARTMENT
ATS	AUTOMATIC TRANSFER SWITCH
BKR	BREAKER
BLDG	BUILDING
BSD	BARE SOFT DRAWN
C, CND	CONDUIT
CAB	CABINET
CKT	CIRCUIT
CN	CONCENTRIC NEUTRAL
CU	COPPER
DB	DIRECT BURIED
DISC	DISCONNECT
DOT	DEPARTMENT OF TRANSPORTATION
DWG	DRAWING
EF	ENTRANCE FACILITY
ELEC	ELECTRICAL
EPR	ETHYLENE–PROPYLENE RUBBER
ER	EQUIPMENT ROOM
EXIST.	EXISTING
FDR	FEEDER
FHWA	FEDERAL HIGHWAY ADMINISTRATION
FOC	FIBER OPTIC CABLE
G, GND	GROUND
GEN	GENERATOR
GFE	GOVERNMENT FURNISHED EQUIPMENT
GRS	GALVANIZED RIGID STEEL
GSC	GROUNDED SERVICE CONDUCTOR
HDPE	HIGH DENSITY POLYETHYLENE
HH	HAND HOLE
HP	HORSE POWER
IHA	INNOVATIVE HEALTH APPLICATIONS
ISC	INSTITUTIONAL SERVICES CONTRACTOR
JBOX	JUNCTION BOX
KCMIL	THOUSAND CIRCULAR
KV	KILOVOLTS
KWH	KILOWATT HOUR POWER MONITOR
LBS	LOAD BREAK SWITCH
LFMC	LIQUID–TIGHT FLEXIBLE METAL CONDUIT
LV	LOW VOLTAGE
MCB	MAIN CIRCUIT BREAKER
MCC	MOTOR CONTROL CENTER
MDP	MAIN DISTRIBUTION PANEL
MESC	MEDICAL AND ENVIRONMENTAL SERVICES CONTRACTOR
MH	ELECTRICAL MANHOLE
MHP	MANHOLE POWER
MTS	MANUAL TRANSFER SWITCH
MV	MEDIUM VOLTAGE
N	NEUTRAL
NC	NORMALLY CLOSED
NO	NORMALLY OPEN
PCB	POLYCHLORINATED BIPHENYLS
PH	PHASE
PILC	PAPER INSULATED, LEAD COVERED
PNL	PANEL
POS	POSITION
PVC	POLYVINYL CHLORIDE
PWR	POWER
SA	SURGE ARRESTOR
SCH	SCHEDULE
SDB	SOFT DRAWN BARE
SP	SPARE
SPD	SURGE PROTECTIVE DEVICE
SS	STAINLESS STEEL, SUBSTATION
SUBSTA	SUBSTATION
SUPV	SUPERVISORY
SW	SWITCH
SWBD	SWITCHBOARD
T, TRANS.	TRANSFORMER
TS	TAPE SHIELD
TYP	TYPICAL
UG	UNDERGROUND
UON	UNLESS OTHERWISE NOTED
USS	UNIT SUBSTATION
V	VOLT
VCB	VACUUM CIRCUIT BREAKER
VFI	VACUUM FAULT INTERRUPTER
VLF	VERY LOW FREQUENCY
XFMR	TRANSFORMER
XLP	CROSS–LINKED POLYETHYLENE INSULATED

SYM.	ZONE	DESCRIPTION	DATE	APPROVED
REVISIONS				

URS
7650 West Courtney Campbell Causeway
Suite 700
Tampa, Florida 33607
Ph: (813) 286–1711 Fax: (813) 286–6587
Florida Engineering Number: 000002

SIGNATURES		DATE
DRAWN	TRS	9/24/12
CHECKED	GSK	9/24/12
SUBMITTED GLENN H. DAVIS		9/24/12
ST OF LICENSURE: FL LICENSE NO.: 66443		
APPROVED F. WALKER		9/24/12
S. MEHTA		9/25/12

NATIONAL AERONAUTICS AND SPACE ADMINISTRATION
JOHN F. KENNEDY SPACE CENTER, NASA
KENNEDY SPACE CENTER, FLORIDA

REVITALIZE MEDIUM VOLTAGE
ELECTRICAL DISTRIBUTION SYSTEMS,
INDUSTRIAL AND PAYLOAD PROCESSING AREAS

GENERAL NOTES AND ABBREVIATIONS

E–001

FILE NO. | SIZE F | DWG. NO. 79K39135
PCN NO. 98860 | SHEET 33

T:\NASA KSC\Task No. 1\Drawings\E–001 GENERAL NOTES AND ABBREVIATIONS.dwg 09/20/2012 14:02
KSC FORM 1–11A (REV 8/91) (C/O 12/93)

NOTICE – WHEN GOVERNMENT DRAWINGS, SPECIFICATIONS, OR OTHER DATA ARE USED FOR ANY PURPOSE OTHER THAN IN CONNECTION WITH A DEFINITELY RELATED GOVERNMENT PROCUREMENT OPERATION, THE UNITED STATES GOVERNMENT THEREBY INCURS NO RESPONSIBILITY NOR ANY OBLIGATION WHATSOEVER; AND THE FACT THAT THE GOVERNMENT MAY HAVE FORMULATED, FURNISHED, OR IN ANY WAY SUPPLIED THE SAID DRAWINGS, SPECIFICATIONS, OR OTHER DATA IS NOT TO BE REGARDED BY IMPLICATION OR OTHERWISE AS IN ANY MANNER LICENSING THE HOLDER OR ANY OTHER PERSON OR CORPORATION, OR CONVEYING ANY RIGHTS OR PERMISSION TO MANUFACTURE, USE, OR SELL ANY PATENTED INVENTION THAT MAY IN ANY WAY BE RELATED THERETO.

SINGLE LINE DIAGRAM LEGEND

- A — SPECIFIC NOTE REFERENCE TAG
- #, A — CABLE SCHEDULE DESIGNATION (EXISTING & NEW)
- REMOVE CONDUCTORS (DEMOLITION)
  PROVIDE CONDUCTORS (MODIFIED)
- EXISTING TO REMAIN

LBS–###

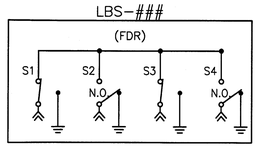

LOAD BREAK SWITCH (NUMBER OF SWITCHED WAYS VARIES)
= SWITCH IDENTIFIER NUMBER
(FDR) = FEEDER DESIGNATION UNDER NORMAL SWITCHING ARRANGEMENT
S# = SWITCHED WAY IDENTIFIER

VFI–###

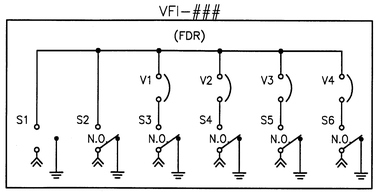

PAD MOUNT VACUUM FAULT INTERRUPTER (NUMBER OF SWITCHED WAYS VARIES)
= SWITCH IDENTIFIER NUMBER
(FDR) = FEEDER DESIGNATION UNDER NORMAL SWITCHING ARRANGEMENT
S# = SWITCHED WAY IDENTIFIER
V# = PROTECTED WAY IDENTIFIER

- AS, AF — PROVIDE FUSED DISCONNECT
  AS = SWITCH CURRENT RATING
  AF = FUSE CURRENT RATING
- NF, AS — PROVIDE DISCONNECT
  AS = SWITCH CURRENT RATING
  NF = NON–FUSED
- AS — EXISTING DISCONNECT
  AS = SWITCH CURRENT RATING
  NF = NON–FUSED
- SWBD AAA #A — PROVIDE NEW SWITCHBOARD
  AAA = REFERENCE NAME
  #A = CURRENT RATING
- PNL AAA — PROVIDE NEW PANELBOARD
  AAA = REFERENCE NAME
- GROUND
- POWER TRANSFORMER
- NORMALLY CLOSED SWITCH
- N.O — NORMALLY OPEN SWITCH
- ELBOW TERMINATION; 200A LOADBREAK OR 600A BOLTED
- NORMALLY CLOSED FUSED SWITCH
- NORMALLY OPEN FUSED SWITCH
- SURGE ARRESTER
- 52 — MEDIUM VOLTAGE DRAWOUT CIRCUIT BREAKER
- CURRENT TRANSFORMER, BLOCKS INDICATE POLARITY
- CORE–BALANCE CURRENT TRANSFORMER, BLOCKS INDICATE POLARITY
- POTENTIAL TRANSFORMER
- TEST SWITCH
- AF, AT — LOW VOLTAGE POWER CIRCUIT BREAKER, DRAWOUT STYLE
  AF = FRAME RATING (AMPS)
  AT = TRIP RATING (AMPS)
- E, N, L — AUTOMAIC TRANSFER SWITCH (ATS)
  E = EMERGENCY LUG CONNECTION
  N = NORMAL LUG CONNECTION
  L = LOAD LUG CONNECTION
- A, P — MOLDED CASE CIRCUIT BREAKER
  A = CURRENT RATING (AMPS)
  P = NO. OF POLES
- EXISTING MCC
- METER
- #A — PROTECTIVE RELAY
  # = RELAY DEVICE FUNCTION NO.
  A = RELAY FUNCTION SUFFIX LETTER
- MANF–MDL — MULTIFUNCTION PROTECTIVE RELAY
  # = RELAY DEVICE FUNCTION NO.
  A = RELAY FUNCTION SUFFIX LETTER
  MANF= MANUFACTURER
  MDL = MODEL
- # — MOTOR
  # = HORSEPOWER RATING

PLAN LEGEND

- A — NOTE REFERENCE
- 1, A — CABLE SCHEDULE DESIGNATION (EXISTING & NEW)
- UE — EXISTING CONDUIT BELOW GRADE TO REMAIN
- EXISTING
- NEW CABLE IN MANHOLE OR ABOVE GRADE IN CONDUIT
- R — REMOVE EXISTING CABLE AND/OR CONDUIT AS INDICATED
- R — REMOVE EXISTING CABLE AND CONDUIT BELOW GRADE OR REMOVE CABLE IN MANHOLES AS INDICATED
- RC — EXISTING CONDUIT TO REMAIN, REMOVE CONDUCTORS AS INDICATED
- UE — PROVIDE NEW CABLES AND/OR REMOVE EXISTING CABLES IN EXISTING UNDERGROUND ELECTRICAL POWER DUCT
- UEN — PROVIDE CONDUIT AND CONDUCTORS BELOW GRADE AS INDICATED
- HDD — PROVIDE HORIZONTAL DIRECTIONAL DRILLED CONDUIT
- G — PROVIDE GROUND
- PROVIDE NEW SPLICE
- EXISTING SPLICE
- PROVIDE TRIFURCATING SPLICE
- EXISTING TRIFURCATING SPLICE
- EXIST. MHP–## — EXISTING ELECTRICAL MANHOLE
- NEW MHP–## N ######.# E ######.# — PROVIDE NEW ELECTRICAL MANHOLE, N AND E VALUES INDICATE FINAL POSITION OF MANHOLE CENTER
- EXISTING PAD MOUNTED SWITCH
- PROVIDE PAD MOUNTED SWITCH
- FRONT — EXISTING TRANSFORMER
- FRONT — PROVIDE NEW TRANSFORMER
- X — X — EXISTING FENCE
- A — EXISTING CABLE OR CONDUIT BELOW GRADE TO BE ABANDONED
- W — WATER LINE
- WW — WASTE WATER LINE
- COMM — COMMUNICATION DUCT
- AIR — COMPRESSED AIR
- HCL — HEAT/COOL LINE
- HH — PROVIDE NEW HANDHOLE
- HH — EXISTING HANDHOLE
- GROUND ROD
- GROUND TEST WELL AND GROUND ROD

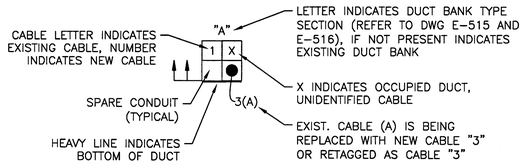

DISTRIBUTION DUCTBANK SECTION LOOKING IN DIRECTION OF ARROWS (A)

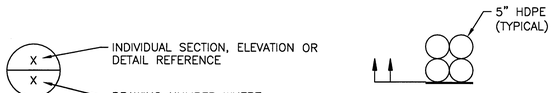

DETAIL REFERENCE

DIRECTIONAL DRILL SECTION

CABLE MARKINGS SAME AS DUCT BANK SECTION.

SPECIFIC NOTES:

A — CONTRACTOR SHALL VERIFY AND ADJUST MEDIUM VOLTAGE DUCT ASSIGNMENTS PRIOR TO REMOVING OR INSTALLING CABLE. ASSUME SPLICES ARE REQUIRED IN ALL MANHOLES FOR BOTH NEW CABLES AND CONNECTIONS TO EXISTING CABLES. COORDINATE ALL CHANGES FROM THE DRAWINGS WITH THE GOVERNMENT AND PROVIDE MARKED–UP DRAWINGS SHOWING ALL DUCT CHANGES.

SYM.	ZONE	DESCRIPTION	DATE	APPROVED
		REVISIONS		

URS
7650 West Courtney Campbell Causeway
Suite 700
Tampa, Florida 33607
Ph: (813) 286–1711 Fax: (813) 286–6587
Florida Engineering Number: 000002

SIGNATURES		DATE
DRAWN	TRS	9/24/12
CHECKED	GSK	9/24/12
SUBMITTED	GLENN H. DAVIS	9/24/12
ST OF LICENSURE: FL		
LICENSE NO.: 66443		
APPROVED	F. WALKER	9/24/12
	S. MEHTA	9/25/12

NATIONAL AERONAUTICS AND SPACE ADMINISTRATION
JOHN F. KENNEDY SPACE CENTER, NASA
KENNEDY SPACE CENTER, FLORIDA

REVITALIZE MEDIUM VOLTAGE ELECTRICAL DISTRIBUTION SYSTEMS, INDUSTRIAL AND PAYLOAD PROCESSING AREAS

SYMBOLS LEGENDS

E–002

FILE NO.	SIZE	DWG. NO.
	F	79K39135
PCN NO. 98860		SHEET 34

T:\NASA KSC\Task No. 1\Drawings\E-002 SYMBOLS LEGEND.dwg 09/25/2012 14:02
KSC FORM 1–11A (REV 6/91) (C/G 12/93)

NOTICE - WHEN GOVERNMENT DRAWINGS, SPECIFICATIONS, OR OTHER DATA ARE USED FOR ANY PURPOSE OTHER THAN IN CONNECTION WITH A DEFINITELY RELATED GOVERNMENT PROCUREMENT OPERATION, THE UNITED STATES GOVERNMENT THEREBY INCURS NO RESPONSIBILITY NOR ANY OBLIGATION WHATSOEVER; AND THE FACT THAT THE GOVERNMENT MAY HAVE FORMULATED, FURNISHED, OR IN ANY WAY SUPPLIED THE SAID DRAWINGS, SPECIFICATIONS, OR OTHER DATA IS NOT TO BE REGARDED BY IMPLICATION OR OTHERWISE AS IN ANY MANNER LICENSING THE HOLDER OR ANY OTHER PERSON OR CORPORATION, OR CONVEYING ANY RIGHTS OR PERMISSION TO MANUFACTURE, USE, OR SELL ANY PATENTED INVENTION THAT MAY IN ANY WAY BE RELATED THERETO.

EXISTING CABLE SCHEDULE

CABLE NO.	VOLT	FEEDER	SIZE	FROM	TO	REMARKS	
A	13.2KV	204/205	1-3/C 250 KCIML PILC	VCB 204/205	MHP-38	REMOVE AND DISPOSE OF MV CABLES	
B	13.2KV	204/205	1-3/C 250 KCIML PILC	VCB 204/205	MHP-38	REMOVE AND DISPOSE OF MV CABLES	
C	13.2KV	204/205	1-3/C 250 KCIML PILC	MHP-38	LBS-14-S4	REMOVE AND DISPOSE OF MV CABLES	
D	13.2KV	204/205	1-3/C 250 KCIML PILC	MHP-38	LBS-14-S3	REMOVE AND DISPOSE OF MV CABLES	
E	13.2KV	204/205	1-3/C 250 KCIML PILC	MHP-38	VFI-18-S1	REMOVE AND DISPOSE OF MV CABLES	
F	13.2KV	204/205	1-3/C 250 KCIML PILC	MHP-38	VFI-18-S2	REMOVE AND DISPOSE OF MV CABLES	
H	13.2KV	204/205	3-1/C #4/0 AWG CN EPR	LBS-14-S2	USS-1A/2C	REMOVE AND DISPOSE OF MV CABLES	
J	13.2KV	204/205	3-1/C #4/0 AWG CN EPR	LBS-14-S1	USS-189	REMOVE AND DISPOSE OF MV CABLES	
K	13.2KV	202/203	1-3/C 500 KCIML PILC	LBS-57-S2	SS-EE	REMOVE AND DISPOSE OF MV CABLES	
L	13.2KV	204/205	1-3/C 500 KCIML PILC	LBS-58-S4	SS-EE	REMOVE AND DISPOSE OF MV CABLES	
M	13.2KV	202/203	1-3/C 500 KCIML PILC	SS-EE	MH-83	REMOVE AND DISPOSE OF MV CABLES	
N	13.2KV	204/205	1-3/C 500 KCIML PILC	SS-EE	MH-83	REMOVE AND DISPOSE OF MV CABLES	
P	13.2KV	202/203	1-3/C 750 KCIML PILC	MH-83	VFI-19-S4	REMOVE AND DISPOSE OF MV CABLES	
R	13.2KV	204/205	1-3/C 750 KCIML PILC	MH-83	VFI-18-S3	REMOVE AND DISPOSE OF MV CABLES	
S	13.2KV	202/203	1-3/C 500 KCMIL PILC	MH-83	MV PULL BOX "WK"	REMOVE AND DISPOSE OF MV CABLES	
T	13.2KV	204/205	1-3/C 500 KCMIL PILC	MH-83	MV PULL BOX "WK"	REMOVE AND DISPOSE OF MV CABLES	
U	13.2KV	202/203	3-1/C 350 KCMIL CN EPR	LBS-13-S1	MHP-39 (LBS-29-S4)	CUT MV CABLE IN MHP-39. REMOVE MV CABLE BETWEEN LBS-13 AND MHP-39. MV CABLE BETWEEN MHP-39 AND LBS-29 TO REMAIN INTACT	
V	13.2KV	TIE 202/203 204/205	3-1/C #4/0 AWG CN EPR	LBS-57-S4	LBS-58-S1	REMOVE AND DISPOSE OF MV CABLES	
W	13.2KV	TIE 202/203 204/205	3-1/C #4/0 AWG CN EPR	T-SS 159A	T-SS 159B	REMOVE AND DISPOSE OF MV CABLES	
Z	13.2KV	202/203	3-1/C 350 KCMIL CN EPR	MHP-68B (LBS-29-S5)	LBS-80-S1	REMOVE MV CABLE BETWEEN LBS-80 AND MHP-68B	
AA	13.2KV	202/203	3-1/C #4/0 AWG XLP	LBS-80-S2	SS-117B	REMOVE AND DISPOSE OF MV CABLES	
AB	13.2KV	202/203	3-1/C #4/0 AWG XLP	LBS-80-S3	SS-118A	REMOVE AND DISPOSE OF MV CABLES	
AC	13.2KV	202/203	3-1/C 350 KCMIL ??	LBS-80-S5	SS-117A PRI SW COMPT	REMOVE AND DISPOSE OF MV CABLES	
AD	13.2KV	101	1-3/C 350 KCMIL PILC	VFI-89-S4	LBS-72-S2	REMOVE AND DISPOSE OF MV CABLES	
AE	13.2KV	101	1-3/C 350 KCMIL PILC	LBS-72-S3	LBS-17-S2	REMOVE AND DISPOSE OF MV CABLES	
AF	13.2KV	102	1-3/C 350 KCMIL PILC	VCB 102	LBS-407-S1	REMOVE AND DISPOSE OF MV CABLES AND DUCTBANK	
AG	13.2KV	102	1-3/C 350 KCMIL PILC	LBS-407-S2	LBS-44-S2	REMOVE AND DISPOSE OF MV CABLES	
AH	13.2KV	TIE 101-102	1-3/C 350 KCMIL PILC	LBS-44-S3	LBS-72-S6	REMOVE AND DISPOSE OF MV CABLES	
AJ	13.2KV	101	1-3/C 350 KCMIL PILC	LBS-72-S1	MHP-64	REMOVE MV CABLE BETWEEN LBS-72 AND MHP-64	
AK	13.2KV	204/205	1-3/C 350 KCMIL PILC	VFI-63-S4	SS-D, SS-E, & SS-F	REMOVE AND DISPOSE OF MV CABLES	
AL	13.2KV	202/203	1-3/C 350 KCMIL PILC	VFI-65-S6	SS-D, SS-E, & SS-F	REMOVE AND DISPOSE OF MV CABLES	
AM	13.2KV	204/205	1-3/C 350 KCMIL PILC	VFI-63-S5	SS-B & SS-C	REMOVE AND DISPOSE OF MV CABLES	
AN	13.2KV	202/203	1-3/C 350 KCMIL PILC	VFI-65-S3	SS-B & SS-C	REMOVE AND DISPOSE OF MV CABLES	
AP	13.2KV	215	3-1/C 350 KCMIL CN EPR	MHP-70	SS-119 (B SIDE)	REMOVE MV CABLE BETWEEN MHP-70 AND SS-119 (B SIDE)	C
AR	13.2KV	215	3-1/C 350 KCMIL CN EPR	MHP-70	SS-119 (B SIDE)	REMOVE MV CABLE BETWEEN MHP-70 AND SS-119 (B SIDE)	C
AS	13.2KV	213	3-1/C 350KCMIL CN EPR	MHP-70	SS-119 (A SIDE)	REMOVE MV CABLE BETWEEN MHP-70 AND SS-119 (A SIDE)	C
AT	13.2KV	213	3-1/C 350KCMIL CN EPR	MHP-70	SS-119 (A SIDE)	REMOVE MV CABLE BETWEEN MHP-70 AND SS-119 (A SIDE)	C
AU	13.2KV	N/A	1-3/C 350 KCMIL PILC	MHP-63	MHP-83	REMOVE ABANDONED MV CABLES	
AV	13.2KV	101	1-3/C 350 KCMIL PILC	VCB 101	MHP-9	REMOVE AND DISPOSE OF MV CABLES AND DUCTBANK	
AW	13.2KV	101	3-1/C 350 KCMIL EPR	MHP-9	VFI-89-S1	REMOVE AND DISPOSE OF MV CABLES	
AY	13.2KV	102	1-3/C 350 KCMIL PILC	LBS-44-S4	VFI-62-S1	REMOVE AND DISPOSE OF MV CABLES	
AZ	13.2KV	TIE 202/203 204/205	3-1/C 350 KCMIL EPR	VFI-63-S1	VFI-65-S2	REMOVE AND DISPOSE OF MV CABLES	
BA	13.2KV	202/203	3-1/C #4/0 AWG CN EPR	MV PULL BOX "WK"	MV SPLICE BOX "WL"	MV CABLES TO REMAIN INTACT	
BB	13.2KV	204/205	3-1/C #4/0 AWG CN EPR	MV PULL BOX "WK"	MV SPLICE BOX "WL"	MV CABLES TO REMAIN INTACT	
BC	2.4KV		3-1/C #4/0 AWG CLOTH COVERED COPPER	SS-C	MCC-C	REMOVE AND DISPOSE OF MV CABLES	
BD	2.4KV		3-1/C #4/0 AWG CLOTH COVERED COPPER	SS-C	MCC-C	REMOVE AND DISPOSE OF MV CABLES	

EXISTING CABLE SCHEDULE

CABLE NO.	VOLT	FEEDER	SIZE	FROM	TO	REMARKS	
CA	4.16KV	213	3-1/C 4/0 AWG 5KV TS EPR AND 1/C 2/0 AWG 600V GND	SS 119 4B	TRANSFORMER T-MCCD1	REMOVE AND DISPOSE OF MV CABLES	
CB	4.16KV	213	3-1/C 4/0 AWG 5KV TS EPR AND 1/C 2/0 AWG 600V GND	SS 119 3B	TRANSFORMER T-MCCD2	REMOVE AND DISPOSE OF MV CABLES	
CC	4.16KV	213	3-1/C 350 KCMIL 5KV TS EPR AND 1/C 2/0 AWG 600V GND	SS 119 4A	CHILLER 6 STARTER (1500 HP)	REMOVE AND DISPOSE OF MV CABLES	
CD	4.16KV	213	3-1/C 350 KCMIL 5KV TS EPR AND 1/C 2/0 AWG 600V GND	SS 119 5B	CHILLER 3 STARTER (1500 HP)	REMOVE AND DISPOSE OF MV CABLES	
CE	4.16KV	213	3-1/C 500 KCMIL 5KV TS EPR AND 1/C 2/0 AWG 600V GND	SS 119 6B	CHILLER 1 STARTER (2000 HP)	REMOVE AND DISPOSE OF MV CABLES	
CF	4.16KV	215	3-1/C 500 KCMIL 5KV TS EPR AND 1/C 2/0 AWG 600V GND	SS 119 8B	CHILLER 2 STARTER (2000 HP)	REMOVE AND DISPOSE OF MV CABLES	
CG	4.16KV	215	3-1/C 4/0 AWG 5KV TS EPR AND 1/C 2/0 AWG 600V GND	SS 119 7B	TRANSFORMER T-MCCD6	REMOVE AND DISPOSE OF MV CABLES	
CH	4.16KV	215	3-1/C 350 KCMIL 5KV TS EPR AND 1/C 2/0 AWG 600V GND	SS 119 8A	TRANSFORMER T-MCCD7	REMOVE AND DISPOSE OF MV CABLES	
CJ	4.16KV	215	3-1/C 350 KCMIL 5KV TS EPR AND 1/C 2/0 AWG 600V GND	SS 119 9B	CHILLER 4 STARTER (1500 HP)	REMOVE AND DISPOSE OF MV CABLES	
CK	4.16KV	215	3-1/C 350 KCMIL 5KV TS EPR AND 1/C 2/0 AWG 600V GND	SS 119 9A	CHILLER 5 STARTER (1500 HP)	REMOVE AND DISPOSE OF MV CABLES	
DA	480V		3-1/C #1/0 AWG	SS-EE	CWP-5 (MCC-A)	REMOVE AND DISPOSE OF LV CABLES WITHIN SS-EE	E
DB	480V		4-1/C #10 AWG	SS-EE	10 KVA XFMR	REMOVE AND DISPOSE OF LV CABLES AND 1-1/4" CONDUIT	
DC	480V		3-1/C #2/0 AWG	SS-EE	LIGHTING CONTACTOR	REMOVE AND DISPOSE OF LV CABLES AND 2" CONDUIT	
DD	480V		3-1/C 500 KCMIL	SS-EE	MCC-EE	REMOVE AND DISPOSE OF LV CABLES	
DE	480V		3-1/C #4/0 AWG AND 1/C #4 AWG GND	SS-D	MHP-73 (M7-355 IOZ RECEPT.)	REMOVE AND DISPOSE OF LV CABLES	F
DF	480V		3-1/C 250 KCMIL AND 1/C #4 AWG GND	SS-D	NEW HANDHOLE	REMOVE AND DISPOSE OF LV CABLES	G
DG	480V		4-1/C 500 KCMIL AND 1/C #3 AWG GND	SS-E	SS-F	REMOVE AND DISPOSE OF LV CABLES AND 4" CONDUIT	
DH	480V		(3) SETS: 3-1/C 500 KCMIL AND 1/C #2/0 AWG GND	SS-E	EXISTING HANDHOLE (MCC-A)	REMOVE AND DISPOSE OF LV CABLES AND 4" CONDUITS	H
DJ	480V		(2) SETS: 3-1/C 500 KCMIL, 1/C #3/0 AWG NEUT. AND 1/C #4/0 AWG GND	SS-E	MHP-73 (MCC-E-1-P)	REMOVE AND DISPOSE OF LV CABLES AND 4" CONDUITS	J
DK	480V		4-1/C 500 KCMIL	SS-F	M7-355 TAP BOX	REMOVE AND DISPOSE OF LV CABLES	
DL	480V		3-1/C 350 KCMIL AND 1/C #2 AWG GND	SS-F	TRAILER POWER	REMOVE AND DISPOSE OF LV CABLES AND 3" CONDUIT	
DM	480V		2-1/C #10 AWG AND 1/C #10 AWG GND	MCC-EE-E2	XFMR U2	REMOVE AND DISPOSE OF LV CABLES AND 1" CONDUIT	

SPECIFIC NOTES:

A. EXCEPT AS OTHERWISE NOTED, CONDUITS ASSOCIATED WITH CABLES IDENTIFIED TO BE REMOVED AS PART OF THIS PROJECT SHALL BE LEFT INTACT.

B. IDENTIFY ALL EXISTING (TO REMAIN) AND NEW CABLES AFFECTED BY THIS PROJECT WITH NEW TAGS PER DETAIL 2 ON DWG. E-512. CABLES ARE TO BE LABELED IN ALL MANHOLES AND AT ALL TERMINATION POINTS.

C. REMOVE CONDUCTORS BETWEEN MHP-70 AND MHP-69 DURING SCHEDULED SHUT DOWN ASSOCIATED WITH ENERGIZING NEW LOAD BREAK SWITCHES LBS-73 AND LBS-74. REMOVE CONDUCTORS BETWEEN MHP-69 AND SS-119 AS PART OF THE DEMOLITION OF SUBSTATION SS-119.

D. REMOVE AND PROPERLY DISPOSE OF PILC CABLE POTHEAD TERMINATIONS AT SWITCHING EQUIPMENT. PILC CABLES MAY HAVE XLP OR EPR CONNECTIONS TO SWITCHING EQUIPMENT INDICATED USING A TRIFURCATING SPLICE AT THE NEAREST MANHOLE. REMOVE THE TRIFURCATING SPLICE AND ALL SUCH EPR OR XLP CABLES WITH THE PILC CABLE TO BE REMOVED.

E. EXISTING CABLE UNDERGROUND BETWEEN SS-EE AND CONDENSER WATER PUMP (CWP-5) SHALL BE RETAINED FOR RE-USE. ALLOW ADEQUATE LENGTH OF RETAINED CABLE AT SS-EE FOR SPLICING TO NEW CIRCUIT.

F. EXISTING CABLE UNDERGROUND BETWEEN MHP-73 AND IOZ RECEPTACLE WITHIN M7-355 SHALL BE RETAINED FOR RE-USE. ALLOW ADEQUATE LENGTH OF RETAINED CABLE AT MHP-73 FOR SPLICING TO NEW CIRCUIT.

G. INSTALL NEW HANDHOLE INDICATED ON DWG. E-413. EXISTING CABLE UNDERGROUND BETWEEN NEW HANDHOLE AND THE LOAD SHALL BE RETAINED FOR RE-USE. ALLOW ADEQUATE LENGTH OF RETAINED CABLE AT NEW HANDHOLE FOR SPLICING TO NEW CIRCUIT.

H. EXISTING CABLE UNDERGROUND BETWEEN EXISTING HANDHOLE AND MCC-A SHALL BE RETAINED FOR RE-USE. ALLOW ADEQUATE LENGTH OF RETAINED CABLE AT EXISTING HANDHOLE FOR SPLICING TO NEW CIRCUIT.

J. EXISTING CABLE UNDERGROUND BETWEEN MHP-73 AND MCC-E-1-P WITHIN M7-355 SHALL BE RETAINED FOR RE-USE. ALLOW ADEQUATE LENGTH OF RETAINED CABLE AT MHP-73 FOR SPLICING TO NEW CIRCUIT.

SYM.	ZONE	DESCRIPTION	DATE	APPROVED
		REVISIONS		

URS
7650 West Courtney Campbell Causeway
Suite 700
Tampa, Florida 33607
Ph: (813) 286-1711 Fax: (813) 286-6587
Florida Engineering Number: 000002

SIGNATURES		DATE
DRAWN	TRS	9/24/12
CHECKED	GSK	9/24/12
SUBMITTED GLENN H. DAVIS		9/24/12
ST OF LICENSURE: FL LICENSE NO.: 66443		
APPROVED F. WALKER		9/24/12
S. MEHTA		9/25/12

NATIONAL AERONAUTICS AND SPACE ADMINISTRATION
JOHN F. KENNEDY SPACE CENTER, NASA
KENNEDY SPACE CENTER, FLORIDA

REVITALIZE MEDIUM VOLTAGE ELECTRICAL DISTRIBUTION SYSTEMS, INDUSTRIAL AND PAYLOAD PROCESSING AREAS

EXISTING CABLE SCHEDULE

E-003

FILE NO.	SIZE	DWG. NO.
	F	79K39135
PCN NO. 98860		SHEET 35

T:\NASA KSC\Task No. 1\Universal\E-003 EXISTING CABLE SCHEDULE.dwg 09/20/2012 14:02
KSC FORM 1-11A (REV 6/91) (C/G 12/93)

NOTICE – WHEN GOVERNMENT DRAWINGS, SPECIFICATIONS, OR OTHER DATA ARE USED FOR ANY PURPOSE OTHER THAN IN CONNECTION WITH A DEFINITELY RELATED GOVERNMENT PROCUREMENT OPERATION, THE UNITED STATES GOVERNMENT THEREBY INCURS NO RESPONSIBILITY NOR ANY OBLIGATION WHATSOEVER; AND THE FACT THAT THE GOVERNMENT MAY HAVE FORMULATED, FURNISHED, OR IN ANY WAY SUPPLIED THE SAID DRAWINGS, SPECIFICATIONS, OR OTHER DATA, IS NOT TO BE REGARDED BY IMPLICATION OR OTHERWISE AS IN ANY MANNER LICENSING THE HOLDER OR ANY OTHER PERSON OR CORPORATION, OR CONVEYING ANY RIGHTS OR PERMISSION TO MANUFACTURE, USE, OR SELL ANY PATENTED INVENTION THAT MAY IN ANY WAY BE RELATED THEREIN.

MODIFIED CABLE SCHEDULE

CABLE NO.	VOLT	FEEDER	SIZE	FROM	TO	REMARKS
1	13.2KV	204/205	3-1/C 350 KCMIL 15KV CN EPR	VCB 204/205	VFI-14-S1	PROVIDE CABLE
2	13.2KV	204/205	3-1/C 350 KCMIL 15KV CN EPR	VCB 204/205	VFI-14-S2	PROVIDE CABLE
3	13.2KV	TIE 204/205 212	3-1/C 350 KCMIL 15KV CN EPR	VFI-14-S6	VFI-12-S2	PROVIDE CABLE
4	13.2KV	204/205	3-1/C 350 KCMIL 15KV CN EPR	VFI-14-S5	VFI-31-S1	PROVIDE CABLE
5	13.2KV	202/203	3-1/C 350 KCMIL 15KV CN EPR	LBS-13-S1	VFI-32-S2	PROVIDE CABLE
6	13.2KV	204/205	3-1/C 350 KCMIL 15KV CN EPR	VFI-14-S3	VFI-18-S1	PROVIDE CABLE
8	13.2KV	204/205	3-1/C #4/0 AWG 15KV CN EPR	VFI-14-S4	USS-1A	PROVIDE CABLE
9	13.2KV	204/205	3-1/C #4/0 AWG 15KV CN EPR	VFI-31-S5	USS-189	PROVIDE CABLE
10	13.2KV	204/205	3-1/C #4/0 AWG 15KV CN EPR	VFI-31-S3	SS-159B	PROVIDE CABLE, CONDUIT, AND DUCT BANK
11	13.2KV	202/203	3-1/C #4/0 AWG 15KV CN EPR	VFI-32-S3	SS-159A	PROVIDE CABLE, CONDUIT, AND DUCT BANK
12	13.2KV	202/203	3-1/C 350 KCMIL 15KV CN EPR	VFI-32-S1	LBS-29-S4	PROVIDE CABLE BETWEEN VFI-32 AND MHP-39 SPLICE TO EXIST. CABLE 'U' IN MHP-39
13	13.2KV	202/203	3-1/C #4/0 AWG 15KV CN EPR	VFI-70-S4	LBS-57-S2	PROVIDE CABLE
14	13.2KV	202/203	3-1/C #4/0 AWG 15KV CN EPR	VFI-19-S4	VFI-70-S1	PROVIDE CABLE
16	13.2KV	204/205	3-1/C #4/0 AWG 15KV CN EPR	LBS-58-S4	VFI-69-S4	PROVIDE CABLE
17	13.2KV	204/205	3-1/C #4/0 AWG 15KV CN EPR	VFI-69-S1	VFI-18-S3	PROVIDE CABLE
18	13.2KV	204/205	3-1/C #4/0 AWG 15KV CN EPR	VFI-69-S3	WK/WL SPLICE BOX	PROVIDE CABLE
19	13.2KV	202/203	3-1/C #4/0 AWG 15KV CN EPR	VFI-70-S3	WK/WL SPLICE BOX	PROVIDE CABLE
20	13.2KV	202/203	3-1/C 350 KCMIL 15KV CN EPR	VFI-80-S2	MHP-68B	PROVIDE CABLE BETWEEN MHP-38B AND VFI-80, SPLICE TO EXIST. CABLE 'Z' IN MHP-68B
21	13.2KV	202/203	3-1/C #4/0 AWG 15KV CN EPR	VFI-80-S3	SS-117B	PROVIDE CABLE
22	13.2KV	202/203	3-1/C #4/0 AWG 15KV CN EPR	VFI-80-S4	SS-118A	PROVIDE CABLE
23	13.2KV	204/205	3-1/C #4/0 AWG 15KV CN EPR	VFI-63-S4	SS-A	PROVIDE CABLE
24	13.2KV	202/203	3-1/C #4/0 AWG 15KV CN EPR	VFI-65-S6	SS-B	PROVIDE CABLE
25	13.2KV	TIE 202/203 204/205	3-1/C #4/0 AWG 15KV CN EPR	T-SS A	T-SS B	PROVIDE CABLE, CONDUIT, AND DUCT BANK
26	13.2KV	TIE 202/203 204/205	3-1/C #4/0 AWG 15KV CN EPR	LBS-57-S4	LBS-58-S1	PROVIDE CABLE
31	13.2KV	102	3-1/C 350 KCMIL 15KV CN EPR	VCB 102	LBS-407-S1	PROVIDE CABLE
32	13.2KV	102	3-1/C 350 KCMIL 15KV CN EPR	LBS-407-S2	LBS-44-S2	PROVIDE CABLE
33	13.2KV	TIE 101-102	3-1/C 350 KCMIL 15KV CN EPR	LBS-44-S3	LBS-72-S6	PROVIDE CABLE
34	13.2KV	101	3-1/C 350 KCMIL 15KV CN EPR	VCB 101	VFI-89-S1	PROVIDE CABLE
35	13.2KV	101	3-1/C 350 KCMIL 15KV CN EPR	VFI-89-S4	LBS-72-S2	PROVIDE CABLE
36	13.2KV	204/205	3-1/C 350 KCMIL 15KV CN EPR	VFI-63-S1	MHP-64 (SS-CRB)	PROVIDE CABLE BETWEEN VFI-63 AND MHP-64, SPLICE TO EXIST. CABLE 'AJ' IN MHP-64
37	13.2KV	101	3-1/C 350 KCMIL 15KV CN EPR	LBS-72-S3	LBS-17-S2	PROVIDE CABLE
38	13.2KV	102	3-1/C 350 KCMIL 15KV CN EPR	LBS-44-S4	VFI-62-S1	PROVIDE CABLE
39	13.2KV	TIE 202/203 204/205	3-1/C #4/0 AWG 15KV CN EPR	VFI-63-S6	VFI-65-S2	PROVIDE CABLE
40	13.2KV	212	3-1/C 350 KCMIL 15KV CN EPR	LBS-79-S3	VFI-12-S1	PROVIDE CABLE
41	13.2KV	213	3-1/C 350 KCMIL 15KV CN EPR	MHP-70	LBS-73-S1	PROVIDE CABLE, CONDUIT AND DUCT BANK
42	13.2KV	213	3-1/C 350 KCMIL 15KV CN EPR	MHP-70	LBS-73-S2	PROVIDE CABLE, CONDUIT AND DUCT BANK
43	13.2KV	215	3-1/C 350 KCMIL 15KV CN EPR	MHP-70	LBS-74-S1	PROVIDE CABLE, CONDUIT AND DUCT BANK
44	13.2KV	215	3-1/C 350 KCMIL 15KV CN EPR	MHP-70	LBS-74-S2	PROVIDE CABLE, CONDUIT AND DUCT BANK
45	13.2KV	213	3-1/C 350 KCMIL 15KV CN EPR	LBS-73-S5	SS-119A	PROVIDE CABLE, CONDUIT AND DUCT BANK
46	13.2KV	213	3-1/C 350 KCMIL 15KV CN EPR	LBS-73-S6	SS-119A	PROVIDE CABLE, CONDUIT AND DUCT BANK
47	13.2KV	215	3-1/C 350 KCMIL 15KV CN EPR	LBS-74-S5	SS-119B	PROVIDE CABLE, CONDUIT AND DUCT BANK
48	13.2KV	215	3-1/C 350 KCMIL 15KV CN EPR	LBS-74-S6	SS-119B	PROVIDE CABLE, CONDUIT AND DUCT BANK
49	13.2KV	213	3-1/C 350 KCMIL 15KV CN EPR	LBS-73-S3	MHP-69	PROVIDE CABLE, CONDUIT AND DUCT BANK; SPLICE TO EXIST. CABLE 'AS' IN MHP-69
50	13.2KV	213	3-1/C 350 KCMIL 15KV CN EPR	LBS-73-S4	MHP-69	PROVIDE CABLE, CONDUIT AND DUCT BANK; SPLICE TO EXIST. CABLE 'AT' IN MHP-69
51	13.2KV	215	3-1/C 350 KCMIL 15KV CN EPR	LBS-74-S3	MHP-69	PROVIDE CABLE, CONDUIT AND DUCT BANK; SPLICE TO EXIST. CABLE 'AP' IN MHP-69
52	13.2KV	215	3-1/C 350 KCMIL 15KV CN EPR	LBS-74-S4	MHP-69	PROVIDE CABLE, CONDUIT AND DUCT BANK; SPLICE TO EXIST. CABLE 'AR' IN MHP-69
53	13.2KV	213	(2) SETS: 3-1/C 350 KCMIL 15KV CN EPR	SS-119A COMPARTMENT 1A	TRANS. T-SS119A PRIMARY	PROVIDE CABLE, CONDUIT, DUCT BANK
54	13.2KV	215	(2) SETS: 3-1/C 350 KCMIL 15KV CN EPR	SS-119B COMPARTMENT 16A	TRANS. T-SS119B PRIMARY	PROVIDE CABLE, CONDUIT, DUCT BANK
61	4.16KV	213	(4) SETS: 3-1/C 500 KCMIL 5KV CN EPR	TRANS. T-SS119A SECONDARY	SS-119A COMPARTMENT 2B	PROVIDE CABLE, CONDUIT, DUCT BANK
62	4.16KV	215	(4) SETS: 3-1/C 500 KCMIL 5KV CN EPR	TRANS. T-SS119B SECONDARY	SS-119B COMPARTMENT 15B	PROVIDE CABLE, CONDUIT, DUCT BANK
63	4.16KV	TIE 213, 215	(4) SETS: 3-1/C 500 KCMIL 5KV CN EPR	SS-119A COMPARTMENT 6A	SS-119B COMPARTMENT 11A	PROVIDE CABLE, CONDUIT, DUCT BANK
65	4.16KV	215	3-1/C 500 KCMIL 5KV CN EPR	SS-119B COMPARTMENT 14B	EXIST. TRANS. T-MCCD7	PROVIDE CABLE, CONDUIT, DUCT BANK

MODIFIED CABLE SCHEDULE

CABLE NO.	VOLT	FEEDER	SIZE	FROM	TO	REMARKS
66	4.16KV	215	3-1/C 500 KCMIL 5KV TS EPR AND 1/C 2/0 AWG 600V EPR GND	SS-119B COMPARTMENT 14A	EXIST. CHILLER 2 MOTOR STARTER (2000HP)	PROVIDE CABLE, CONDUIT, DUCT BANK
67	4.16KV	215	3-1/C 350 KCMIL 5KV TS EPR AND 1/C 2/0 AWG 600V EPR GND	SS-119B COMPARTMENT 13B	EXIST. CHILLER 4 MOTOR STARTER (1500HP)	PROVIDE CABLE, CONDUIT, DUCT BANK
68	4.16KV	215	3-1/C 350 KCMIL 5KV TS EPR AND 1/C 2/0 AWG 600V EPR GND	SS-119B COMPARTMENT 13A	EXIST. CHILLER 5 MOTOR STARTER (1500HP)	PROVIDE CABLE, CONDUIT, DUCT BANK
69	4.16KV	213	3-1/C 350 KCMIL 5KV TS EPR AND 1/C 2/0 AWG 600V EPR GND	SS-119A COMPARTMENT 5A	EXIST. CHILLER 6 MOTOR STARTER (1500HP)	PROVIDE CABLE, CONDUIT, DUCT BANK
70	4.16KV	213	3-1/C 500 KCMIL 5KV TS EPR AND 1/C 2/0 AWG 600V EPR GND	SS-119A COMPARTMENT 5B	EXIST. CHILLER 1 MOTOR STARTER (2000HP)	PROVIDE CABLE, CONDUIT, DUCT BANK
71	4.16KV	213	3-1/C 350 KCMIL 5KV TS EPR AND 1/C 2/0 AWG 600V EPR GND	SS-119A COMPARTMENT 4A	EXIST. CHILLER 3 MOTOR STARTER (1500HP)	PROVIDE CABLE, CONDUIT, DUCT BANK
72	4.16KV	213	3-1/C 4/0 AWG 5KV TS EPR AND 1/C 2/0 AWG 600V EPR GND	SS-119A COMPARTMENT 4B	EXIST. TRANS. T-MCCD1	PROVIDE CABLE, CONDUIT, DUCT BANK
73	4.16KV	213	3-1/C 4/0 AWG 5KV TS EPR AND 1/C 2/0 AWG 600V EPR GND	SS-119A COMPARTMENT 3A	EXIST. TRANS. T-MCCD2	PROVIDE CABLE, CONDUIT, DUCT BANK
74	4.16KV	215	3-1/C 4/0 AWG 5KV TS EPR AND 1/C 2/0 AWG 600V EPR GND	SS-119B COMPARTMENT 12A	EXIST. TRANS. T-MCCD6	PROVIDE CABLE, CONDUIT, DUCT BANK
81	480V		(6) SETS: 3-1/C 500KCMIL RHW-2 PH AND 1-1/C 500KCMIL RHW-2 GSC	T-SS227A	SS-227A	PROVIDE WIRE, CONDUIT, DUCT BANK
82	480V		(3) SETS: 3-1/C 500KCMIL RHW-2 PH, AND 1/C #4/0 GND	SS-227A	MCC-A IACP	PROVIDE WIRE, CONDUIT, DUCT BANK
83	480V		3-#4 AWG RHW-2 PH. AND 1-#4 AWG RHW-2 GND	SS-227A	FP ATS	PROVIDE WIRE, CONDUIT, DUCT BANK B
84	N/A		F	SS-227B	M7-355 COMM. RM.	
85	480V		3-1/C #4/0 RHW-2 PH, AND 1/C #4 GND	SS-227B	IOZ RECEPT.	PROVIDE WIRE, CONDUIT, DUCT BANK SPLICE TO EXISTING CABLE IN MHP-73
86	480V		(6) SETS: 3-1/C 500KCMIL RHW-2 PH AND 1-1/C 500KCMIL RHW-2 GSC	T-SS227B	SS-227B	PROVIDE WIRE, CONDUIT, DUCT BANK
87	480V		(2) SETS: 3-1/C 500KCMIL RHW-2 PH, 1/C 500KCMIL NEUT., AND 1/C #2/0 AWG GND	SS-227B	PNL B2	PROVIDE WIRE, CONDUIT, DUCT BANK
88	480V		(2) SETS: 3-1/C 500KCMIL RHW-2 PH, 1/C 500KCMIL NEUT., AND 1/C #2/0 AWG GND	SS-227B	SWBD B1	PROVIDE WIRE, CONDUIT, DUCT BANK
89	480V		3-1/C #2 AWG THWN-2 PH, AND 1-1/C #2 AWG GSC	PNL B2	TRANSF. T-B2	PROVIDE WIRE, LFMC CONDUIT
90	480V		4-1/C #2 AWG THWN-2 PH, AND 1-1/C #2 AWG THWN-2 GSC	TRANSF. T-B2	PANEL B3 VIA LIGHTING CONTACTOR	PROVIDE WIRE, LFMC CONDUIT
91	480V		(2) SETS: 3-1/C 500KCMIL RHW-2 PH, 1/C #3/0 NEUT., AND 1/C #4/0 AWG GND	SS-227B	MCC E-1-P	PROVIDE WIRE, CONDUIT, DUCT BANK
92	480V		(6) SETS: 3-1/C 500KCMIL RHW-2 PH, 1/C 500KCMIL NEUT., AND 1/C 500KCMIL GND	SS-227A	SS-227B	PROVIDE WIRE, CONDUIT, DUCT BANK
93	480V		2-1/C #2 AWG THWN-2 AND 1/C #2 AWG GND	EXISTING WIREWAY	ENCLOSED CIRCUIT BREAKER	PROVIDE CABLE, CONDUIT E
94	480V		2-1/C #10 AWG THWN-2 AND 1/C #10 AWG GND	ENCLOSED CIRCUIT BREAKER	XFMR U2	PROVIDE CABLE, CONDUIT
101	13.2KV	204/205	3-1/C #2 AWG 15KV TS EPR, MV-90 AND #2 AWG BARE GND	VFI-31-S6	VFI-31 PT CABINET	PROVIDE CABLE, CONDUIT
102	120V	N/A	3-1/C #12 AWG RHW-2 PH, AND 1-1/C #12 AWG RHW-2 GND	VFI-31 PT CABINET	METERING TERMINAL BOX	PROVIDE CABLE, CONDUIT
103	120V	N/A	3-1/C #10 AWG RHW-2 PH, 1-1/C AND #10 AWG RHW-2 NEUT.	VFI-31-S3 CTs	METERING TERMINAL BOX	PROVIDE CABLE, CONDUIT
104	120V	N/A	3-1/C #12 AWG RHW-2 PH, AND 1-1/C #12 AWG RHW-2 GND	METERING TERMINAL BOX	VFI-31 KWH METER	PROVIDE CABLE, CONDUIT
105	120V	N/A	3-1/C #10 AWG RHW-2 PH, 1-1/C AND #10 AWG RHW-2 NEUT.	METERING TERMINAL BOX	VFI-31 KWH METER	PROVIDE CABLE, CONDUIT
106	13.2KV	202/203	3-1/C #2 AWG 15KV TS EPR, MV-90 AND #2 AWG BARE GND	VFI-32-S6	VFI-32 PT CABINET	PROVIDE CABLE, CONDUIT
107	120V	N/A	3-1/C #12 AWG RHW-2 PH, AND 1-1/C #12 AWG RHW-2 GND	VFI-32 PT CABINET	METERING TERMINAL BOX	PROVIDE CABLE, CONDUIT
108	120V	N/A	3-1/C #10 AWG RHW-2 PH, 1-1/C AND #10 AWG RHW-2 NEUT.	VFI-32-S3 CTs	METERING TERMINAL BOX	PROVIDE CABLE, CONDUIT
109	120V	N/A	3-1/C #12 AWG RHW-2 PH, AND 1-1/C #12 AWG RHW-2 GND	METERING TERMINAL BOX	VFI-32 KWH METER	PROVIDE CABLE, CONDUIT
110	120V	N/A	3-1/C #10 AWG RHW-2 PH, 1-1/C AND #10 AWG RHW-2 NEUT.	METERING TERMINAL BOX	VFI-32 KWH METER	PROVIDE CABLE, CONDUIT

SPECIFIC NOTES:

A. IDENTIFY ALL EXISTING AND NEW CABLES AFFECTED BY THIS PROJECT WITH NEW TAGS PER DETAIL 2 ON DWG. E-512.

B. FEEDER PHASE AND GROUND WIRES SHALL BE STRANDED COPPER CONDUCTOR, RHW-2 INSULATED, AND 2-HOUR FIRE RATED PER UL 2196. WHERE FEEDER IS ROUTED ABOVE GRADE, INSTALL FEEDER WIRES IN GRS CONDUIT IN ACCORDANCE WITH THE WIRE MANUFACTURER'S PUBLISHED APPLICATION AND INSTALLATION INSTRUCTIONS.

C. REFER TO PANEL SCHEDULES ON DWG. E-641 FOR ADDITIONAL NEW LOW VOLTAGE CABLE AND CONDUIT REQUIREMENTS.

D. REFER TO ENLARGED SITE PLANS FOR NEW CONDUIT AND DUCT BANK REQUIREMENTS AT NEW EQUIPMENT LOCATIONS.

E. TAP TO EXISTING 350A MCC-A CIRCUIT IN EXISTING WIREWAY.

F. REFER TO DWG. E-635 FOR CABLE REQUIREMENTS.

SYM.	ZONE	DESCRIPTION	DATE	APPROVED
		REVISIONS		

URS
7650 West Courtney Campbell Causeway
Suite 700
Tampa, Florida 33607
Ph: (813) 286-1711 Fax: (813) 286-6587
Florida Engineering Number: 0000002

SIGNATURES		DATE
DRAWN	TRS	9/24/12
CHECKED	GSK	9/24/12
SUBMITTED	GLENN H. DAVIS	9/24/12
ST OF LICENSURE: FL		
LICENSE NO.: 66443		
APPROVED	F. WALKER	9/24/12
	S. MEHTA	9/25/12

NATIONAL AERONAUTICS AND SPACE ADMINISTRATION
JOHN F. KENNEDY SPACE CENTER, NASA
KENNEDY SPACE CENTER, FLORIDA

REVITALIZE MEDIUM VOLTAGE ELECTRICAL DISTRIBUTION SYSTEMS, INDUSTRIAL AND PAYLOAD PROCESSING AREAS

MODIFIED CABLE SCHEDULE

E-004

FILE NO. | SIZE F | DWG. NO. 79K39135

PCN NO. 98860 | SHEET 36

KSC FORM 1-11A (REV 8/91) (C/G 12/93)

NOTICE – WHEN GOVERNMENT DRAWINGS, SPECIFICATIONS, OR OTHER DATA ARE USED FOR ANY PURPOSE OTHER THAN IN CONNECTION WITH A DEFINITELY RELATED GOVERNMENT PROCUREMENT OPERATION, THE UNITED STATES GOVERNMENT THEREBY INCURS NO RESPONSIBILITY, NOR ANY OBLIGATION WHATSOEVER; AND THE FACT THAT THE GOVERNMENT MAY HAVE FORMULATED, FURNISHED, OR IN ANY WAY SUPPLIED THE SAID DRAWINGS, SPECIFICATIONS OR OTHER DATA IS NOT TO BE REGARDED BY IMPLICATION OR OTHERWISE AS IN ANY MANNER LICENSING THE HOLDER OR ANY OTHER PERSON OR CORPORATION, OR CONVEYING ANY RIGHTS OR PERMISSION TO MANUFACTURE, USE, OR SELL ANY PATENTED INVENTION THAT MAY IN ANY WAY BE RELATED THERETO.

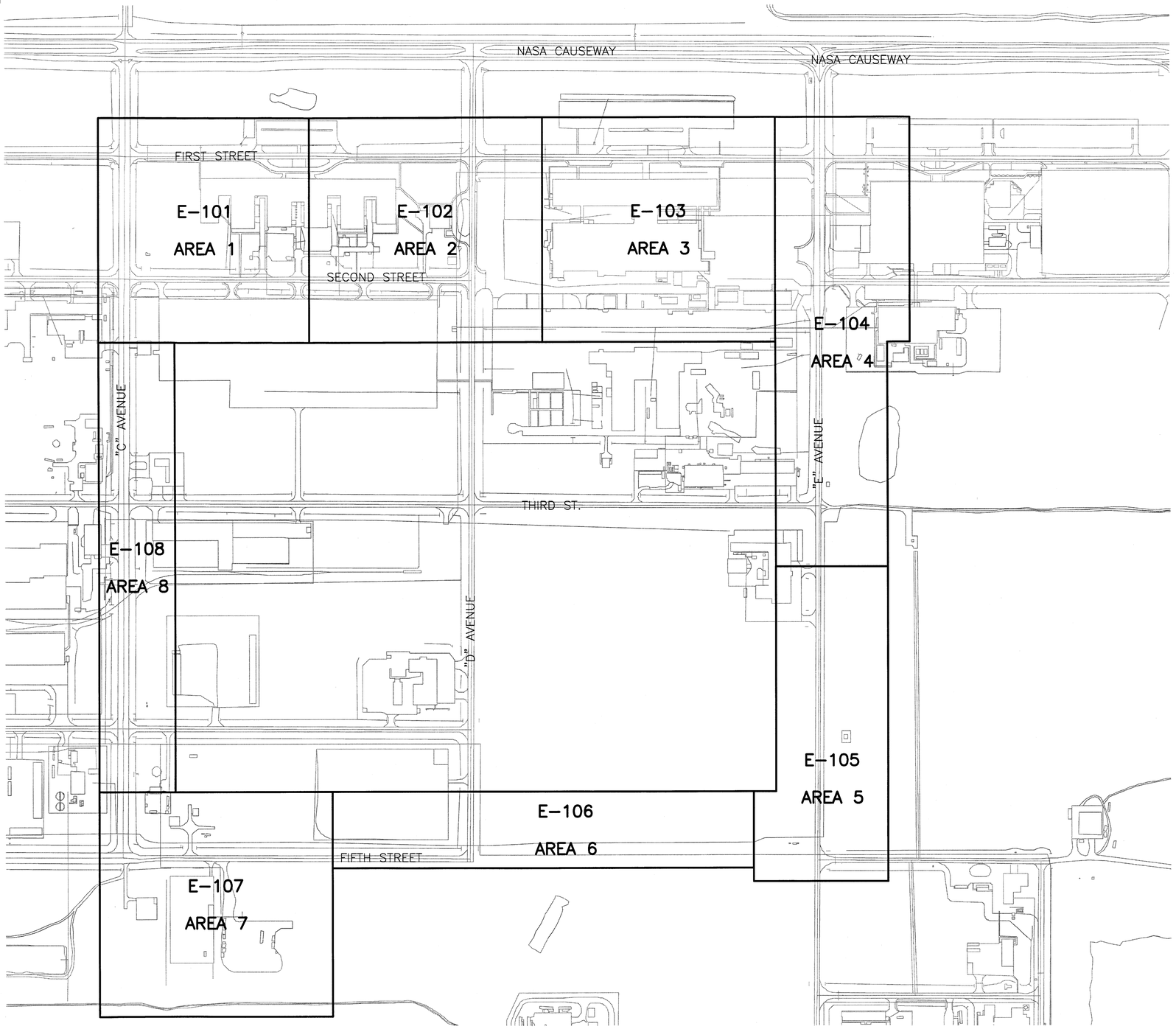

N

GRAPHIC SCALE

0' 100' 200' 400' 600'

1" = 200'-0"

SITE BREAKOUT PLAN

SCALE 1" = 200'

SYM.	ZONE	DESCRIPTION	DATE	APPROVED
		REVISIONS		

URS
7650 West Courtney Campbell Causeway
Suite 700
Tampa, Florida 33607
Ph: (813) 286-1711 Fax: (813) 286-6587
Florida Engineering Number: 000002

SIGNATURES		DATE
DRAWN	TRS	9/24/12
CHECKED	GSK	9/24/12
SUBMITTED	GLENN R. DAVIS	9/24/12
ST OF LICENSURE: FL		
LICENSE NO.: 56443		
APPROVED	F. WALKER	9/24/12
	S. MEHTA	9/25/12

NATIONAL AERONAUTICS AND SPACE ADMINISTRATION
JOHN F. KENNEDY SPACE CENTER, NASA
KENNEDY SPACE CENTER, FLORIDA

REVITALIZE MEDIUM VOLTAGE
ELECTRICAL DISTRIBUTION SYSTEMS,
INDUSTRIAL AND PAYLOAD PROCESSING AREAS

SITE BREAKOUT PLAN

E-100

FILE NO.	SIZE	DWG. NO.
	F	79K39135
PCN NO. 98860		SHEET 37

T:\NASA KSC\Task 80_1\Drawings\E-100 SITE BREAKOUT PLAN.dwg 09/20/2012 14:02

KSC FORM 1-11A (REV 6/91) (C/G 12/93)

NOTICE - WHEN GOVERNMENT DRAWINGS, SPECIFICATIONS, OR OTHER DATA ARE USED FOR ANY PURPOSE OTHER THAN IN CONNECTION WITH A DEFINITELY RELATED GOVERNMENT PROCUREMENT OPERATION, THE UNITED STATES GOVERNMENT THEREBY INCURS NO RESPONSIBILITY NOR ANY OBLIGATION WHATSOEVER; AND THE FACT THAT THE GOVERNMENT MAY HAVE FORMULATED, FURNISHED, OR IN ANY WAY SUPPLIED THE SAID DRAWINGS, SPECIFICATIONS, OR OTHER DATA IS NOT TO BE REGARDED BY IMPLICATION OR OTHERWISE AS IN ANY MANNER LICENSING THE HOLDER OR ANY OTHER PERSON OR CORPORATION, OR CONVEYING ANY RIGHTS OR PERMISSION TO MANUFACTURE, USE, OR SELL ANY PATENTED INVENTION THAT MAY IN ANY WAY BE RELATED THERETO.

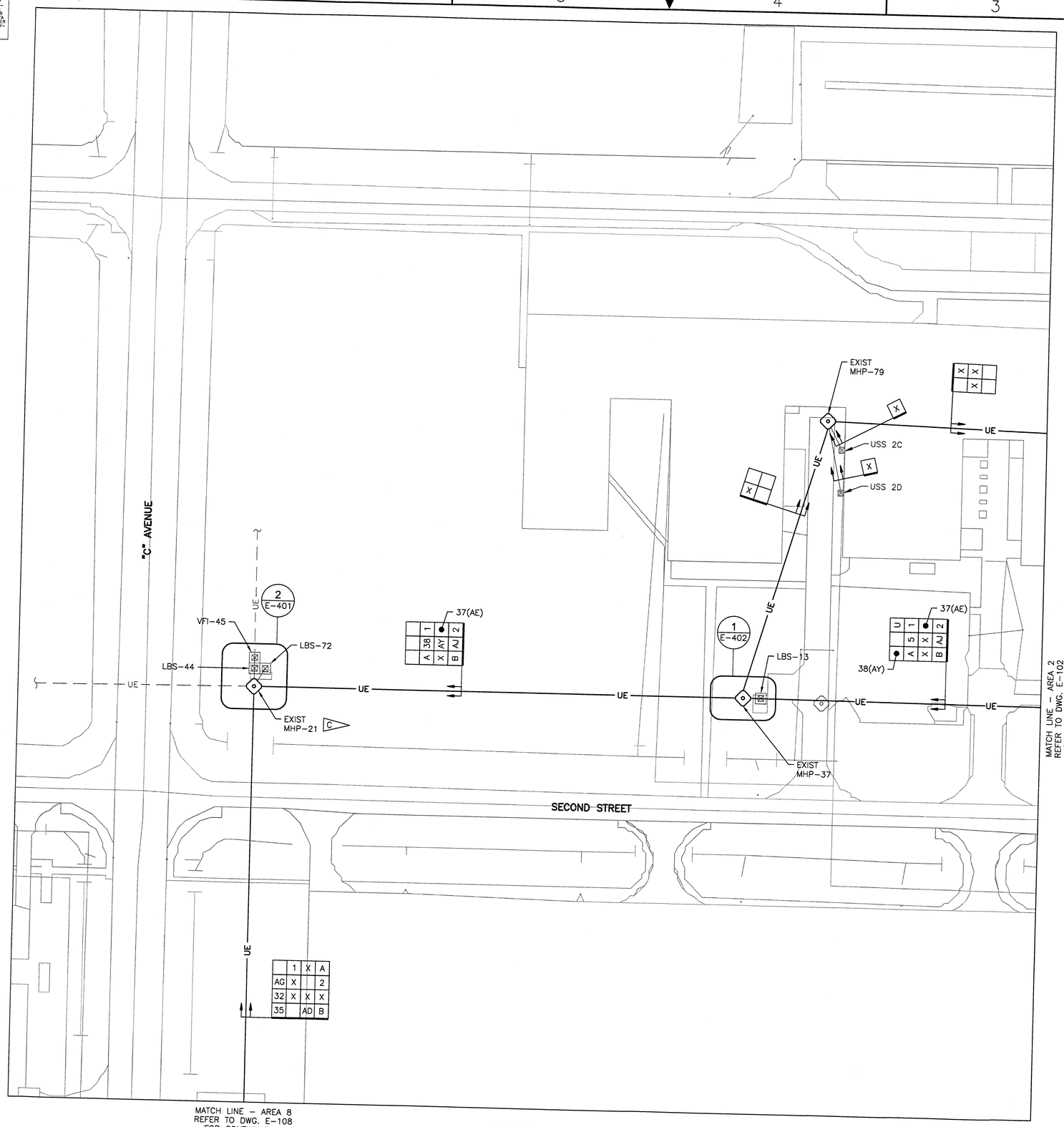

SITE PLAN - AREA 1

SCALE 1" = 40' - 0"

N

GRAPHIC SCALE

1" = 40'-0" 0' 20' 40' 80' 120'

SPECIFIC NOTES:

A. REFER TO DWG. E-001 FOR GENERAL NOTES AND E-002 FOR SYMBOLS LEGEND.

B. REFER TO DWG. E-003 AND E-004 FOR CABLE SCHEDULES.

C. REFER TO ENLARGED PLAN FOR DESCRIPTION OF CABLE #33(AH) ROUTING BETWEEN LBS-44 AND LBS-72.

SYM.	ZONE	DESCRIPTION	DATE	APPROVED

REVISIONS

URS
7650 West Courtney Campbell Causeway
Suite 700
Tampa, Florida 33607
Ph: (813) 286-1711 Fax: (813) 286-6587
Florida Engineering Number: 000002

SIGNATURES		DATE
DRAWN	TRS	9/24/12
CHECKED	GSK	9/24/12
SUBMITTED	GLENN H. DAVIS	9/24/12
ST OF LICENSURE: FL		
LICENSE NO.: 66443		
APPROVED	F. WALKER	9/24/12
	S. MEHTA	9/25/12

NATIONAL AERONAUTICS AND SPACE ADMINISTRATION
JOHN F. KENNEDY SPACE CENTER, NASA
KENNEDY SPACE CENTER, FLORIDA

REVITALIZE MEDIUM VOLTAGE ELECTRICAL DISTRIBUTION SYSTEMS, INDUSTRIAL AND PAYLOAD PROCESSING AREAS

SITE PLAN - AREA 1

FILE NO.	SIZE	DWG. NO.
	F	79K39135
PCN NO. 98860		SHEET 38

E-101

KSC FORM 1-11A (REV 6/91) (C/G 12/93)

T:\NASA KSC\Jobs No. 1\Drawings\E-101 SITE PLAN - AREA 1.dwg 09/20/2012 14:02

NOTICE – WHEN GOVERNMENT DRAWINGS, SPECIFICATIONS, OR OTHER DATA ARE USED FOR ANY PURPOSE OTHER THAN IN CONNECTION WITH A DEFINITELY RELATED GOVERNMENT PROCUREMENT OPERATION, THE UNITED STATES GOVERNMENT THEREBY INCURS NO RESPONSIBILITY NOR ANY OBLIGATION WHATSOEVER; AND THE FACT THAT THE GOVERNMENT MAY HAVE FORMULATED, FURNISHED, OR IN ANY WAY SUPPLIED THE SAID DRAWINGS, SPECIFICATIONS, OR OTHER DATA IS NOT TO BE REGARDED BY IMPLICATION OR OTHERWISE AS IN ANY MANNER LICENSING THE HOLDER OR ANY OTHER PERSON OR CORPORATION, OR CONVEYING ANY RIGHTS OR PERMISSION TO MANUFACTURE, USE, OR SELL ANY PATENTED INVENTION THAT MAY IN ANY WAY BE RELATED THERETO.

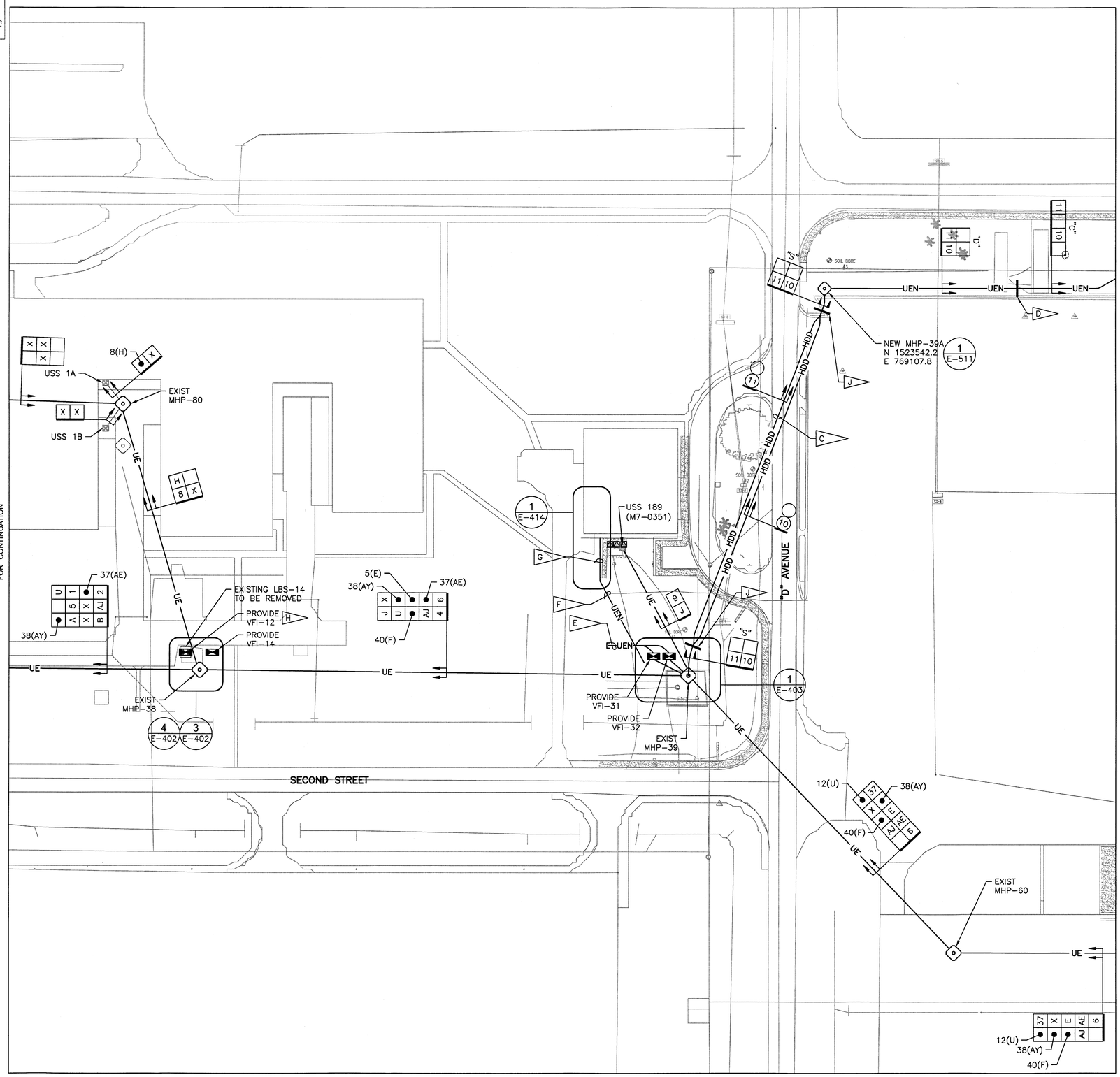

SITE PLAN – AREA 2

SCALE 1" = 40' – 0"

N

GRAPHIC SCALE

0' 20' 40' 80' 120'

1" = 40'-0"

SPECIFIC NOTES:

A. REFER TO DWG. E–001 FOR GENERAL NOTES AND E–002 FOR SYMBOLS LEGEND.

B. REFER TO DWG. E–003 AND E–004 FOR CABLE SCHEDULES.

C. REFER TO DETAIL DWG. C–401 FOR DIRECTIONAL DRILLED CONDUIT PROFILE.

D. TRANSITION FROM TYPE "D" DUCT BANK ARRANGEMENT TO TYPE "C" DUCT BANK ARRANGEMENT.

E. PROVIDE DUCT BANK A MINIMUM OF 20' PAST VFI–31, –32 CONCRETE PAD FOR FUTURE CENTRAL CAMPUS FACILITIES.

F. PROVIDE 1 1/2" COMMUNICATIONS CONDUIT, DIRECT BURIED AND EXPOSED, BETWEEN VFI–31 AND –32 METERING CABINETS AND EXISTING COMMUNICATIONS RACK INSIDE AUDITORIUM AND TRAINING BUILDING M7–351 COMMUNICATIONS ROOM 123. PROVIDE SCH. 80 PVC CONDUIT WHERE DIRECT BURIED AND GRS CONDUIT WHERE EXPOSED. WHERE CONDUIT IS DIRECT BURIED, PROVIDE A MINIMUM OF 24" EARTH COVER. TRANSITION SCH. 80 PVC CONDUIT TO GRS CONDUIT AT LAST 90 DEG. ELBOW BEFORE RISING UP AND EMERGING FROM GRADE. REFER TO DRAWING E–632 FOR COMMUNICATIONS CONDUIT CONTENTS REQUIREMENTS.

G. ROUTE COMMUNICATIONS CONDUIT EXPOSED ABOVE GRADE ON EXISTING PIPE RACK. PROVIDE GALVANIZED STEEL SUPPORT STRUTS ON EXISTING PIPE RACK ON WHICH TO MOUNT CONDUIT, AS REQUIRED. FASTEN STRUT TO PIPE RACK USING 1/4" DIA. GALVANIZED STEEL HARDWARE. DO NOT FASTEN STRUT TO MECHANICAL PIPE OR OTHER CONDUIT

H. REFER TO ENLARGED PLAN 4 ON DWG. E–402 FOR ROUTING OF CABLE #3.

J. DEMARCATION OF TRANSITION BETWEEN CONCRETE ENCASED HDPE CONDUIT AND HDPE DIRECTIONALLY BORED CONDUIT.

SYM.	ZONE	DESCRIPTION	DATE	APPROVED
		REVISIONS		

URS

7650 West Courtney Campbell Causeway
Suite 700
Tampa, Florida 33607
Ph: (813) 286–1711 Fax: (813) 286–6587
Florida Engineering Number: 000002

SIGNATURES		DATE
DRAWN	TRS	9/24/12
CHECKED	GSK	9/24/12
SUBMITTED	GLENN H. DAVIS	9/24/12
ST OF LICENSURE: FL		
LICENSE NO.: 66443		
APPROVED	F. WALKER	9/24/12
	S. MEHTA	9/25/12

NATIONAL AERONAUTICS AND SPACE ADMINISTRATION
JOHN F. KENNEDY SPACE CENTER, NASA
KENNEDY SPACE CENTER, FLORIDA

REVITALIZE MEDIUM VOLTAGE ELECTRICAL DISTRIBUTION SYSTEMS, INDUSTRIAL AND PAYLOAD PROCESSING AREAS

SITE PLAN – AREA 2

FILE NO.	SIZE	DWG. NO.
	F	79K39135
PCN NO. 98860		SHEET 39

E–102

KSC FORM 1–11A (REV 8/91) (C/O 12/93)

FLVASA KSC\Tom Inc. \Drawings\E–102 SITE PLAN – AREA 2.dwg 09/05/2012 9:03

NOTICE – WHEN GOVERNMENT DRAWINGS, SPECIFICATIONS, OR OTHER DATA ARE USED FOR ANY PURPOSE OTHER THAN IN CONNECTION WITH A DEFINITELY RELATED GOVERNMENT PROCUREMENT OPERATION, THE UNITED STATES GOVERNMENT THEREBY INCURS NO RESPONSIBILITY NOR ANY OBLIGATION WHATSOEVER; AND THE FACT THAT THE GOVERNMENT MAY HAVE FORMULATED, FURNISHED, OR IN ANY WAY SUPPLIED THE SAID DRAWINGS, SPECIFICATIONS, OR OTHER DATA IS NOT TO BE REGARDED BY IMPLICATION, OR OTHERWISE AS IN ANY MANNER LICENSING THE HOLDER OR ANY OTHER PERSON OR CORPORATION, OR CONVEYING ANY RIGHTS OR PERMISSION TO MANUFACTURE, USE OR SELL ANY PATENTED INVENTION THAT MAY IN ANY WAY BE RELATED THERETO.

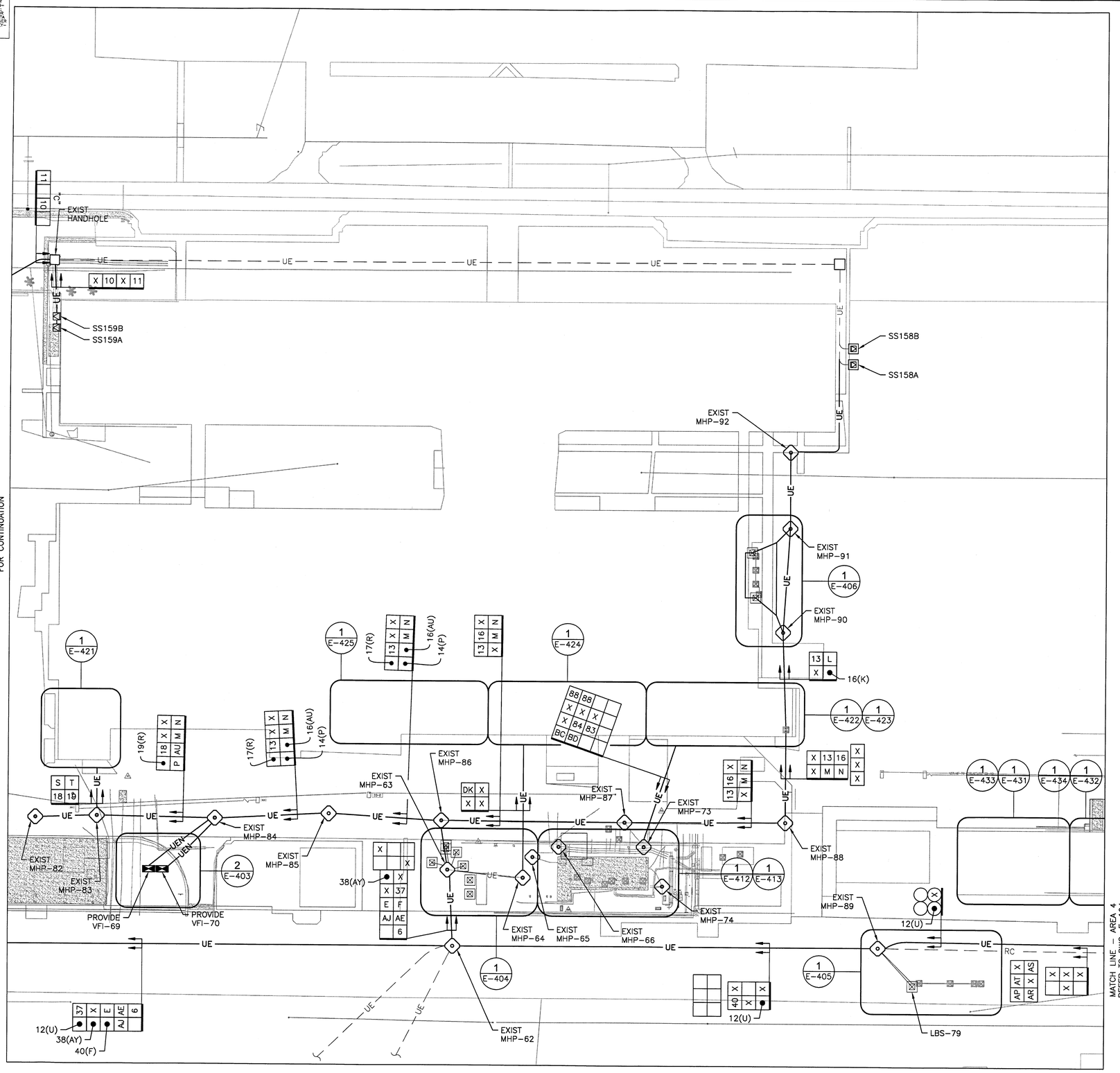

SITE PLAN – AREA 3

SCALE 1" = 40' – 0"

N

GRAPHIC SCALE

0' 20' 40' 80' 120'

1" = 40'-0"

SPECIFIC NOTES:

A. REFER TO DWG. E-001 FOR GENERAL NOTES AND E-002 FOR SYMBOLS LEGEND.

B. REFER TO DWG. E-003 AND E-004 FOR CABLE SCHEDULES.

C. REMOVE CABLE "AU" PRIOR TO OTHER CABLE WORK WITHIN MANHOLES MHP-63, -83, -84, -85, AND -86.

SYM.	ZONE	DESCRIPTION	DATE	APPROVED

REVISIONS

URS
7650 West Courtney Campbell Causeway
Suite 700
Tampa, Florida 33607
Ph: (813) 286-1711 Fax: (813) 286-6587
Florida Engineering Number: 000002

SIGNATURES		DATE
DRAWN	TRS	9/24/12
CHECKED	GSK	9/24/12
SUBMITTED GLENN H. DAVIS		9/24/12
ST OF LICENSURE: FL		
LICENSE NO.: 66443		
APPROVED F. WALKER		9/24/12
S. MEHTA		9/25/12

NATIONAL AERONAUTICS AND SPACE ADMINISTRATION
JOHN F. KENNEDY SPACE CENTER, NASA
KENNEDY SPACE CENTER, FLORIDA

REVITALIZE MEDIUM VOLTAGE ELECTRICAL DISTRIBUTION SYSTEMS, INDUSTRIAL AND PAYLOAD PROCESSING AREAS

SITE PLAN – AREA 3

FILE NO. | SIZE F | DWG. NO. 79K39135

PCN NO. 98860 | SHEET 40

E-103

KSC FORM 1-11A (REV 8/91) (C/G 12/93)

NOTICE – WHEN GOVERNMENT DRAWINGS, SPECIFICATIONS, OR OTHER DATA ARE USED FOR ANY PURPOSE OTHER THAN IN CONNECTION WITH A DEFINITELY RELATED GOVERNMENT PROCUREMENT OPERATION, THE UNITED STATES GOVERNMENT THEREBY INCURS NO RESPONSIBILITY NOR ANY OBLIGATION WHATSOEVER; AND THE FACT THAT THE GOVERNMENT MAY HAVE FORMULATED, FURNISHED, OR IN ANY WAY SUPPLIED THE SAID DRAWINGS, SPECIFICATIONS, OR OTHER DATA IS NOT TO BE REGARDED BY IMPLICATION OR OTHERWISE AS IN ANY MANNER LICENSING THE HOLDER OR ANY OTHER PERSON OR CORPORATION, OR CONVEYING ANY RIGHTS OR PERMISSION TO MANUFACTURE, USE, OR SELL ANY PATENTED INVENTION THAT MAY IN ANY WAY BE RELATED THERETO.

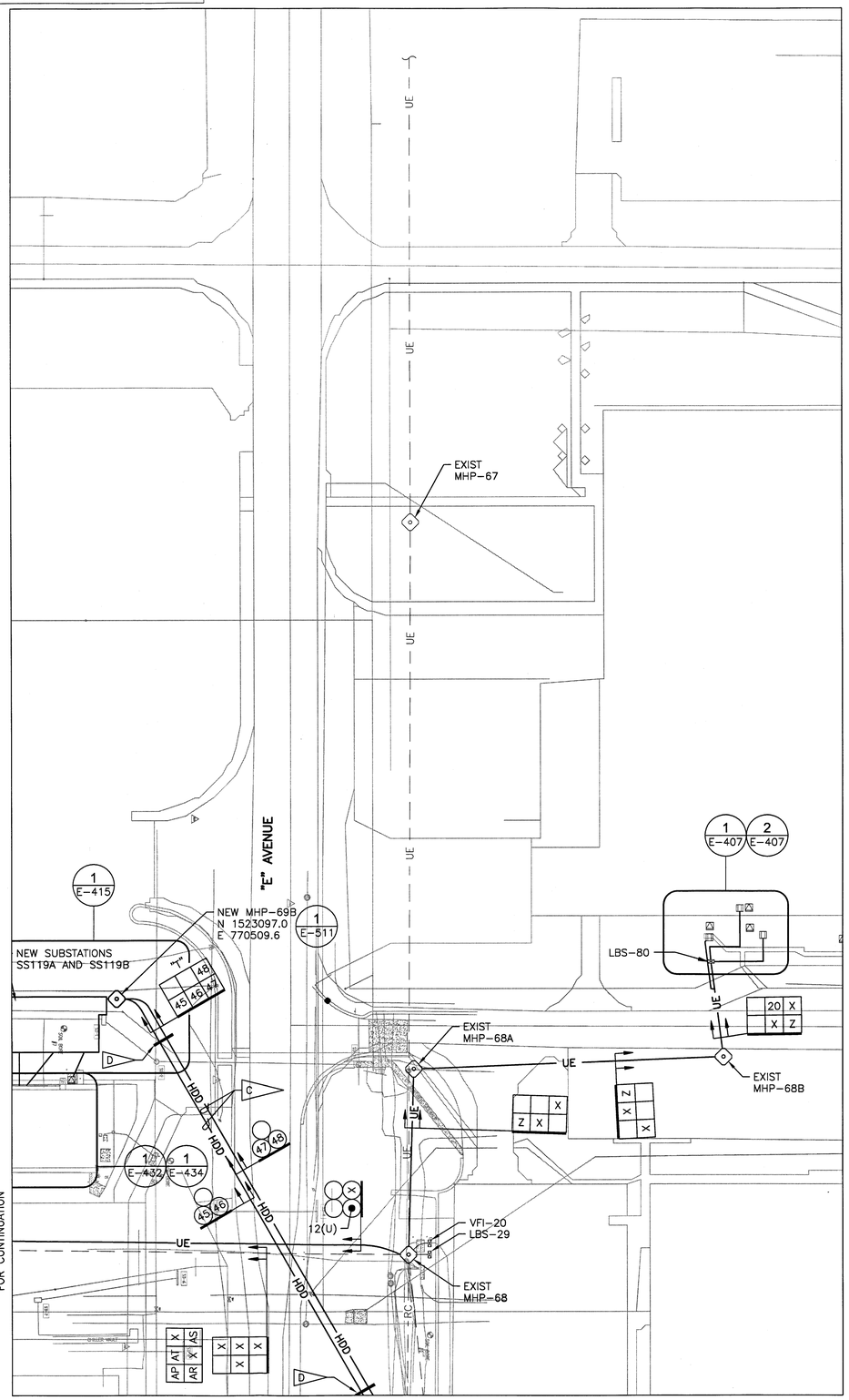

MATCH LINE – AREA 3
REFER TO DWG. E-103
FOR CONTINUATION

MATCH LINE
SEE UPPER RIGHT

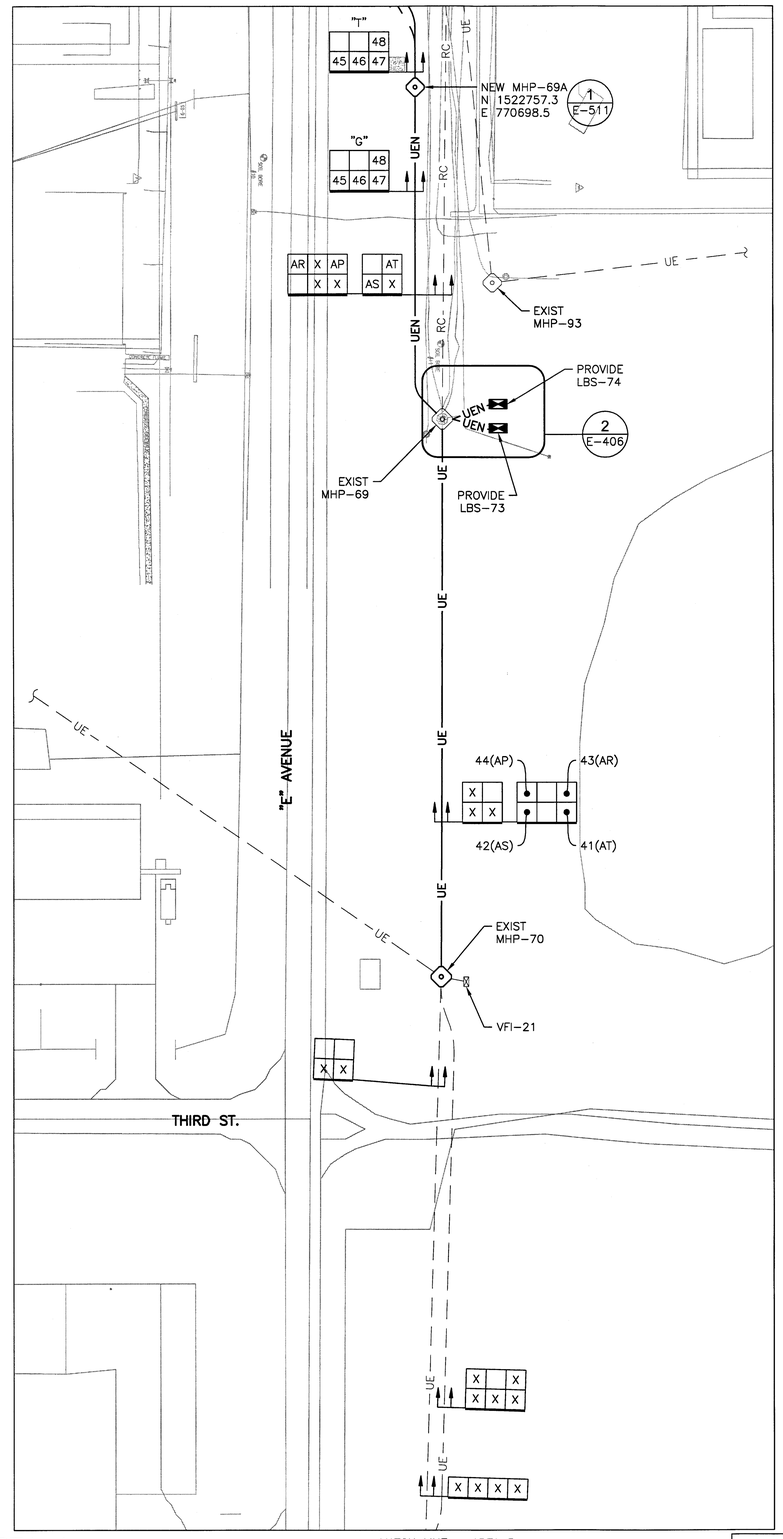

MATCH LINE – AREA 5
REFER TO DWG. E-105
FOR CONTINUATION

N

GRAPHIC SCALE

0' 20' 40' 80' 120'

1" = 40'-0"

SPECIFIC NOTES:

A. REFER TO DWG. E-001 FOR GENERAL NOTES AND E-002 FOR SYMBOLS LEGEND.

B. REFER TO DWG. E-003 AND E-004 FOR CABLE SCHEDULES.

C. REFER TO DWG. C-402 FOR DIRECTIONAL DRILLED CONDUIT PROFILE.

D. DEMARCATION OF TRANSITION BETWEEN CONCRETE ENCASED HDPE CONDUIT AND HDD HDPE CONDUIT.

SITE PLAN – AREA 4

SCALE 1" = 40' – 0"

E-104

SYM.	ZONE	DESCRIPTION	DATE	APPROVED
		REVISIONS		

URS
7650 West Courtney Campbell Causeway
Suite 700
Tampa, Florida 33607
Ph: (813) 286-1711 Fax: (813) 286-6587
Florida Engineering Number: 000002

SIGNATURES		DATE
DRAWN	TRS	9/24/12
CHECKED	GSK	9/24/12
SUBMITTED	GLENN H. DAVIS	9/24/12
ST OF LICENSURE: FL		
LICENSE NO.: 66443		
APPROVED	F. WALKER	9/26/12
	S. MEHTA	9/25/12

NATIONAL AERONAUTICS AND SPACE ADMINISTRATION
JOHN F. KENNEDY SPACE CENTER, NASA
KENNEDY SPACE CENTER, FLORIDA

REVITALIZE MEDIUM VOLTAGE
ELECTRICAL DISTRIBUTION SYSTEMS,
INDUSTRIAL AND PAYLOAD PROCESSING AREAS

SITE PLAN – AREA 4

FILE NO.	SIZE	DWG. NO.
	F	79K39135
PCN NO. 98860		SHEET 41

T:\NASA KSC\Tank Rc. T:\Drawings\E-104 SITE PLAN – AREA 4.dwg 09/20/2012 14:03

KSC FORM 1-11A (REV 6/91) (C/G 12/93)

NOTICE – WHEN GOVERNMENT DRAWINGS, SPECIFICATIONS, OR OTHER DATA ARE USED FOR ANY PURPOSE OTHER THAN IN CONNECTION WITH A DEFINITELY RELATED GOVERNMENT PROCUREMENT OPERATION, THE UNITED STATES GOVERNMENT THEREBY INCURS NO RESPONSIBILITY NOR ANY OBLIGATION WHATSOEVER; AND THE FACT THAT THE GOVERNMENT MAY HAVE FORMULATED, FURNISHED, OR IN ANY WAY SUPPLIED THE SAID DRAWINGS, SPECIFICATIONS, OR OTHER DATA IS NOT TO BE REGARDED BY IMPLICATION OR OTHERWISE AS IN ANY MANNER LICENSING THE HOLDER OR ANY OTHER PERSON OR CORPORATION, OR CONVEYING ANY RIGHTS OR PERMISSION TO MANUFACTURE, USE, OR SELL ANY PATENTED INVENTION THAT MAY IN ANY WAY BE RELATED THERETO.

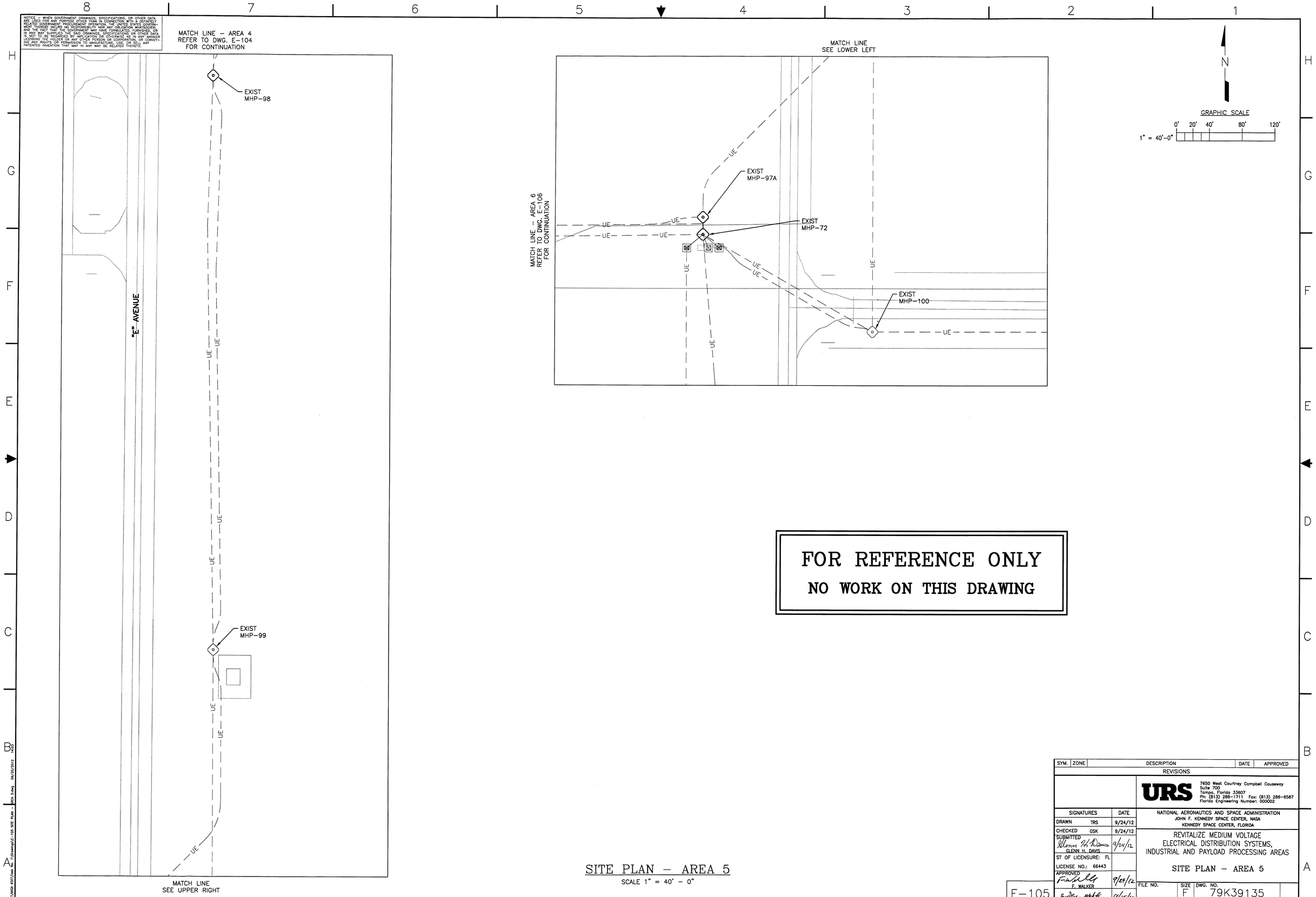

FOR REFERENCE ONLY

NO WORK ON THIS DRAWING

SITE PLAN – AREA 5

SCALE 1" = 40' – 0"

SYM.	ZONE	DESCRIPTION	DATE	APPROVED
		REVISIONS		

URS
7650 West Courtney Campbell Causeway
Suite 700
Tampa, Florida 33607
Ph: (813) 286-1711 Fax: (813) 286-6587
Florida Engineering Number: 000002

SIGNATURES		DATE
DRAWN	TRS	9/24/12
CHECKED	GSK	9/24/12
SUBMITTED	GLENN H. DAVIS	9/24/12
ST OF LICENSURE: FL	LICENSE NO.: 66443	
APPROVED	F. WALKER	9/26/12
	S. MEHTA	9/25/12

NATIONAL AERONAUTICS AND SPACE ADMINISTRATION
JOHN F. KENNEDY SPACE CENTER, NASA
KENNEDY SPACE CENTER, FLORIDA

REVITALIZE MEDIUM VOLTAGE
ELECTRICAL DISTRIBUTION SYSTEMS,
INDUSTRIAL AND PAYLOAD PROCESSING AREAS

SITE PLAN – AREA 5

FILE NO.	SIZE	DWG. NO.
	F	79K39135
PCN NO. 98860		SHEET 42

E-105

KSC FORM 1-11A (REV 6/91) (C/G 12/93)

TLVAGA ASCI\Task No. 1\Drawings\E-105 SITE PLAN - AREA 5.dwg 09/25/2012 14:03

NOTICE – WHEN GOVERNMENT DRAWINGS, SPECIFICATIONS, OR OTHER DATA ARE USED FOR ANY PURPOSE OTHER THAN IN CONNECTION WITH A DEFINITELY RELATED GOVERNMENT PROCUREMENT OPERATION, THE UNITED STATES GOVERNMENT THEREBY INCURS NO RESPONSIBILITY NOR ANY OBLIGATION WHATSOEVER; AND THE FACT THAT THE GOVERNMENT MAY HAVE FORMULATED, FURNISHED, OR IN ANY WAY SUPPLIED THE SAID DRAWINGS, SPECIFICATIONS OR OTHER DATA IS NOT TO BE REGARDED BY IMPLICATION OR OTHERWISE AS IN ANY MANNER LICENSING THE HOLDER OR ANY OTHER PERSON OR CORPORATION, OR CONVEYING ANY RIGHTS OR PERMISSION TO MANUFACTURE, USE, OR SELL ANY PATENTED INVENTION THAT MAY IN ANY WAY BE RELATED THERETO.

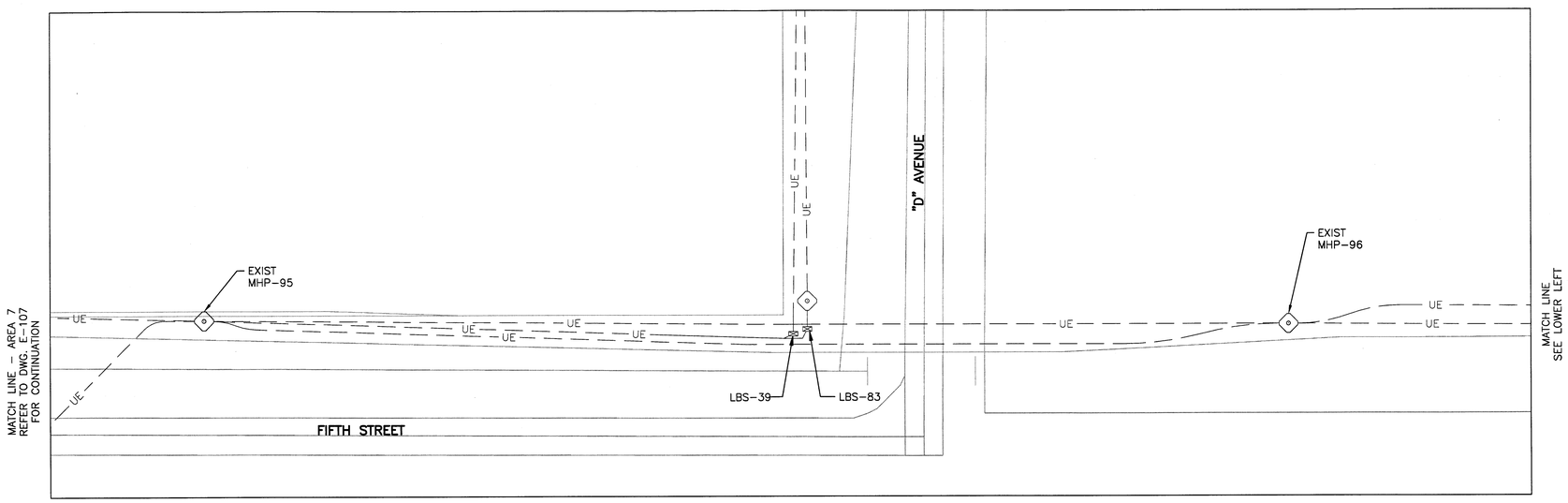

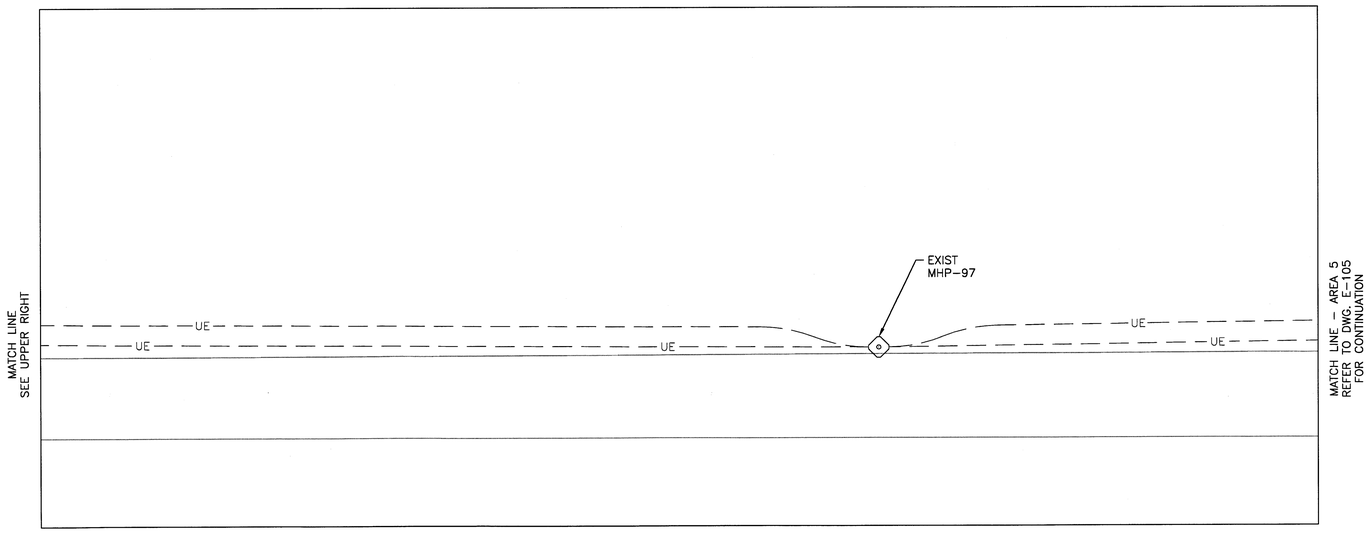

SITE PLAN – AREA 6

SCALE 1" = 40' – 0"

N

GRAPHIC SCALE

0' 20' 40' 80' 120'

1" = 40'-0"

FOR REFERENCE ONLY

NO WORK ON THIS DRAWING

SYM.	ZONE	DESCRIPTION	DATE	APPROVED
		REVISIONS		

URS

7650 West Courtney Campbell Causeway
Suite 700
Tampa, Florida 33607
Ph: (813) 286-1711 Fax: (813) 286-6587
Florida Engineering Number: 000002

SIGNATURES		DATE
DRAWN	TRS	9/24/12
CHECKED	GSK	9/24/12
SUBMITTED	GLENN H. DAVIS	9/24/12
ST OF LICENSURE: FL		
LICENSE NO.: 66443		
APPROVED	F. WALKER	9/24/12
	S. MEHTA	9/25/12

NATIONAL AERONAUTICS AND SPACE ADMINISTRATION
JOHN F. KENNEDY SPACE CENTER, NASA
KENNEDY SPACE CENTER, FLORIDA

REVITALIZE MEDIUM VOLTAGE
ELECTRICAL DISTRIBUTION SYSTEMS,
INDUSTRIAL AND PAYLOAD PROCESSING AREAS

SITE PLAN – AREA 6

E-106

FILE NO.	SIZE	DWG. NO.
	F	79K39135
PCN NO. 98860		SHEET 43

KSC FORM 1-11A (REV 6/91) (C/O 12/93)

T:\NASA KSC\Task No. 1\Drawings\E-106 SITE PLAN - AREA 6.dwg 09/20/2012 1:40

NOTICE – WHEN GOVERNMENT DRAWINGS, SPECIFICATIONS, OR OTHER DATA ARE USED FOR ANY PURPOSE OTHER THAN IN CONNECTION WITH A DEFINITELY-RELATED GOVERNMENT PROCUREMENT OPERATION, THE UNITED STATES GOVERNMENT THEREBY INCURS NO RESPONSIBILITY NOR ANY OBLIGATION WHATSOEVER; AND THE FACT THAT THE GOVERNMENT MAY HAVE FORMULATED, FURNISHED, OR IN ANY WAY SUPPLIED THE SAID DRAWINGS, SPECIFICATIONS, OR OTHER DATA IS NOT TO BE REGARDED BY IMPLICATION OR OTHERWISE AS IN ANY MANNER LICENSING THE HOLDER OR ANY OTHER PERSON OR CORPORATION, OR CONVEYING ANY RIGHTS OR PERMISSION TO MANUFACTURE, USE, OR SELL ANY PATENTED INVENTION THAT MAY IN ANY WAY BE RELATED THERETO.

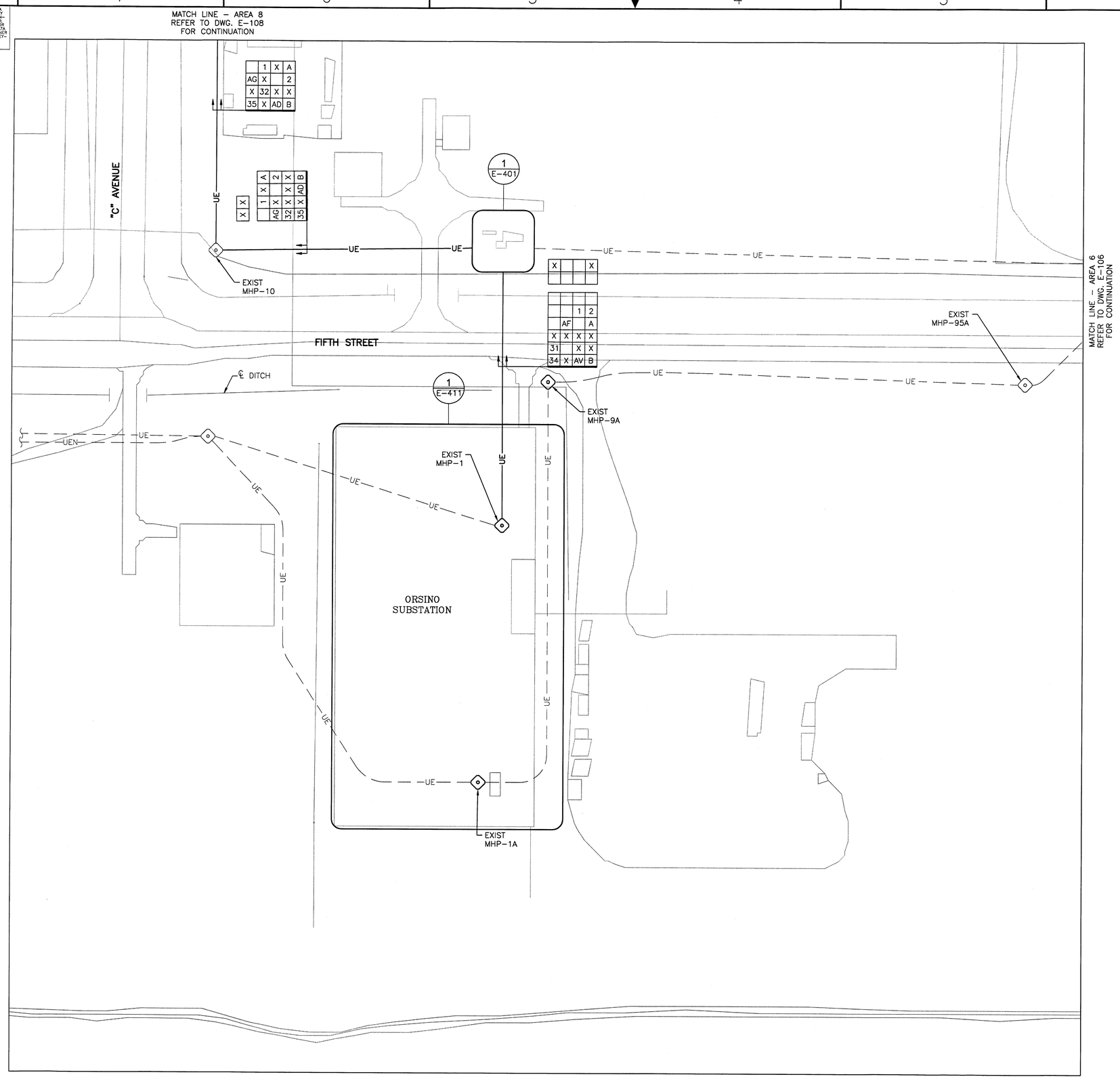

SITE PLAN – AREA 7

SCALE 1" = 40' – 0"

N

GRAPHIC SCALE

0' 20' 40' 80' 120'

1" = 40'-0"

SPECIFIC NOTES:

A. REFER TO DWG. E-001 FOR GENERAL NOTES AND E-002 FOR SYMBOLS LEGEND.

B. REFER TO DWG. E-003 AND E-004 FOR CABLE SCHEDULES.

SYM.	ZONE	DESCRIPTION	DATE	APPROVED
		REVISIONS		

URS

7650 West Courtney Campbell Causeway
Suite 700
Tampa, Florida 33607
Ph: (813) 286-1711 Fax: (813) 286-6587
Florida Engineering Number: 000002

SIGNATURES		DATE
DRAWN	TRS	9/24/12
CHECKED	GSK	9/24/12
SUBMITTED GLENN H. DAVIS		9/24/12
ST OF LICENSURE: FL		
LICENSE NO.: 66443		
APPROVED F. WALKER		9/24/12
S. MEHTA		9/25/12

NATIONAL AERONAUTICS AND SPACE ADMINISTRATION
JOHN F. KENNEDY SPACE CENTER, NASA
KENNEDY SPACE CENTER, FLORIDA

REVITALIZE MEDIUM VOLTAGE
ELECTRICAL DISTRIBUTION SYSTEMS,
INDUSTRIAL AND PAYLOAD PROCESSING AREAS

SITE PLAN – AREA 7

E-107

FILE NO.	SIZE	DWG. NO.
	F	79K39135
PCN NO. 98860		SHEET 44

KSC FORM 1-11A (REV 8/91) (C/G 12/93)

T:\NASA KSC\Task No. 1\Drawings\E-107 SITE PLAN - AREA 7.dwg 09/25/2012 14:03

NOTICE – WHEN GOVERNMENT DRAWINGS, SPECIFICATIONS, OR OTHER DATA ARE USED FOR ANY PURPOSE OTHER THAN IN CONNECTION WITH A DEFINITELY RELATED GOVERNMENT PROCUREMENT OPERATION, THE UNITED STATES GOVERNMENT THEREBY INCURS NO RESPONSIBILITY NOR ANY OBLIGATION WHATSOEVER; AND THE FACT THAT THE GOVERNMENT MAY HAVE FORMULATED, FURNISHED, OR IN ANY WAY SUPPLIED THE SAID DRAWINGS, SPECIFICATIONS, OR OTHER DATA IS NOT TO BE REGARDED BY IMPLICATION OR OTHERWISE AS IN ANY MANNER LICENSING THE HOLDER OR ANY OTHER PERSON OR CORPORATION, OR CONVEYING ANY RIGHTS OR PERMISSION TO MANUFACTURE, USE, OR SELL ANY PATENTED INVENTION THAT MAY IN ANY WAY BE RELATED THERETO.

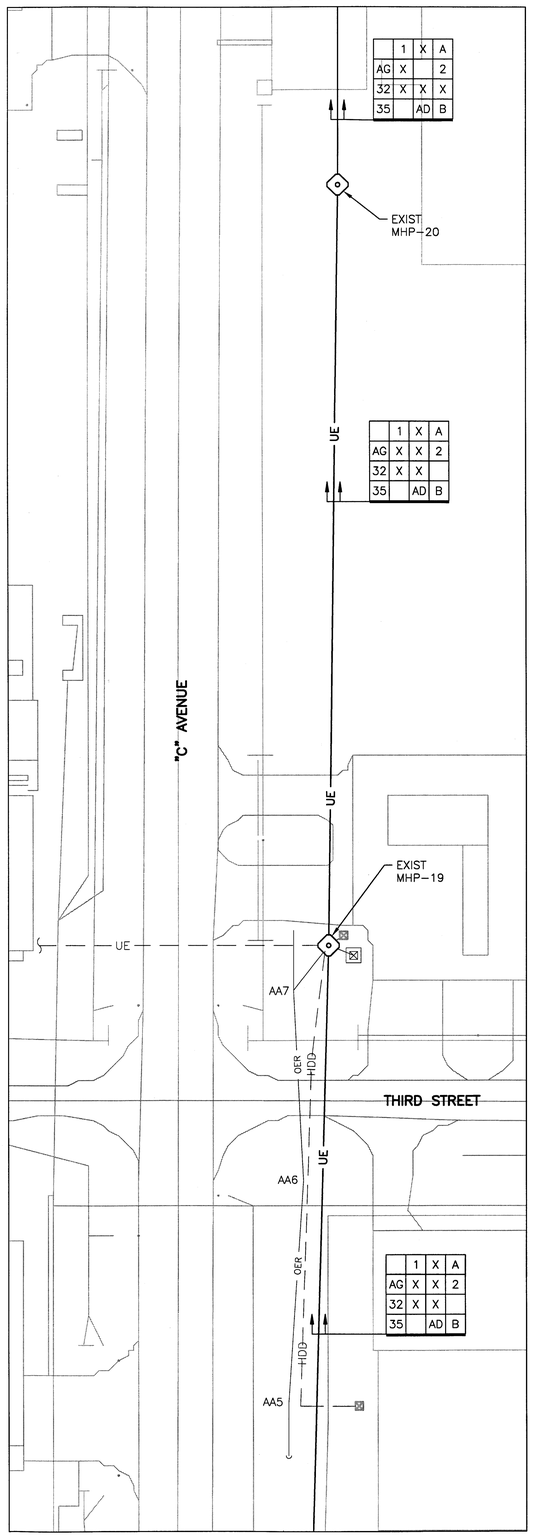

	1	X	A
AG	X		2
32	X	X	X
35		AD	B

	1	X	A
AG	X	X	2
32	X	X	
35		AD	B

	1	X	A
AG	X	X	2
32	X	X	
35		AD	B

	1	X	A
AG	X		2
32	X	X	X
35	X	AD	B

SITE PLAN – AREA 8

SCALE 1" = 40' – 0"

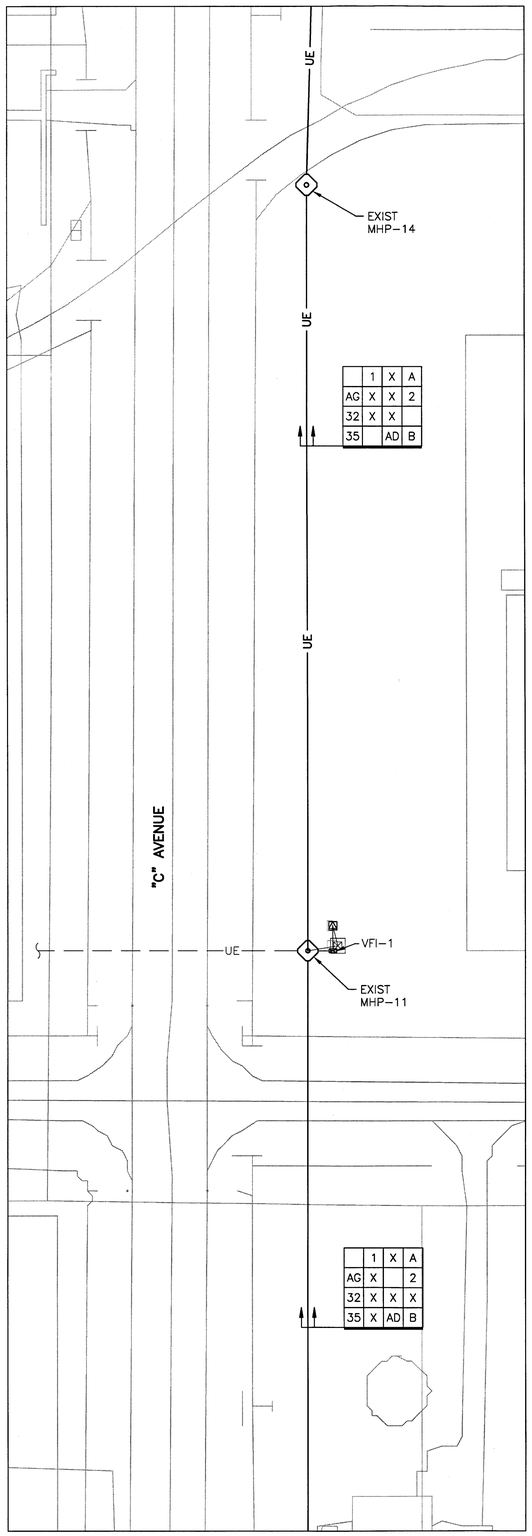

	1	X	A
AG	X	X	2
32	X	X	
35		AD	B

	1	X	A
AG	X		2
32	X	X	X
35	X	AD	B

N

GRAPHIC SCALE

0' 20' 40' 80' 120'

1" = 40'-0"

SPECIFIC NOTES:

A. REFER TO DWG. E-001 FOR GENERAL NOTES AND E-002 FOR SYMBOLS LEGEND.

B. REFER TO DWG. E-003 AND E-004 FOR CABLE SCHEDULES.

SYM.	ZONE	DESCRIPTION	DATE	APPROVED
		REVISIONS		

URS
7650 West Courtney Campbell Causeway
Suite 700
Tampa, Florida 33607
Ph: (813) 286-1711 Fax: (813) 286-6587
Florida Engineering Number: 000002

SIGNATURES		DATE
DRAWN	TRS	9/24/12
CHECKED	GSK	9/24/12
SUBMITTED GLENN H. DAVIS		9/24/12
ST OF LICENSURE: FL		
LICENSE NO.: 66443		
APPROVED F. WALKER		9/24/12
S. MEHTA		9/25/12

NATIONAL AERONAUTICS AND SPACE ADMINISTRATION
JOHN F. KENNEDY SPACE CENTER, NASA
KENNEDY SPACE CENTER, FLORIDA

REVITALIZE MEDIUM VOLTAGE
ELECTRICAL DISTRIBUTION SYSTEMS,
INDUSTRIAL AND PAYLOAD PROCESSING AREAS

SITE PLAN – AREA 8

E-108

FILE NO.	SIZE	DWG. NO.
	F	79K39135
PCN NO. 98860		SHEET 45

F:\VAGA RSC\Task No. 1\Drawings\E-108 SITE PLAN – AREA 8.dwg 09/20/2012 1:03
KSC FORM 1-11A (REV 8/91) (C/G 12/93)

NOTICE – WHEN GOVERNMENT DRAWINGS, SPECIFICATIONS, OR OTHER DATA ARE USED FOR ANY PURPOSE OTHER THAN IN CONNECTION WITH A DEFINITELY RELATED GOVERNMENT PROCUREMENT OPERATION, THE UNITED STATES GOVERNMENT THEREBY INCURS NO RESPONSIBILITY NOR ANY OBLIGATION WHATSOEVER; AND THE FACT THAT THE GOVERNMENT MAY HAVE FORMULATED, FURNISHED, OR IN ANY WAY SUPPLIED THE SAID DRAWINGS, SPECIFICATIONS, OR OTHER DATA IS NOT TO BE REGARDED BY IMPLICATION OR OTHERWISE AS IN ANY MANNER LICENSING THE HOLDER OR ANY OTHER PERSON OR CORPORATION, OR CONVEYING ANY RIGHTS OR PERMISSION TO MANUFACTURE, USE, OR SELL ANY PATENTED INVENTION THAT MAY IN ANY WAY BE RELATED THERETO.

N

GRAPHIC SCALE

0' 5' 10' 15'

1" = 5'-0"

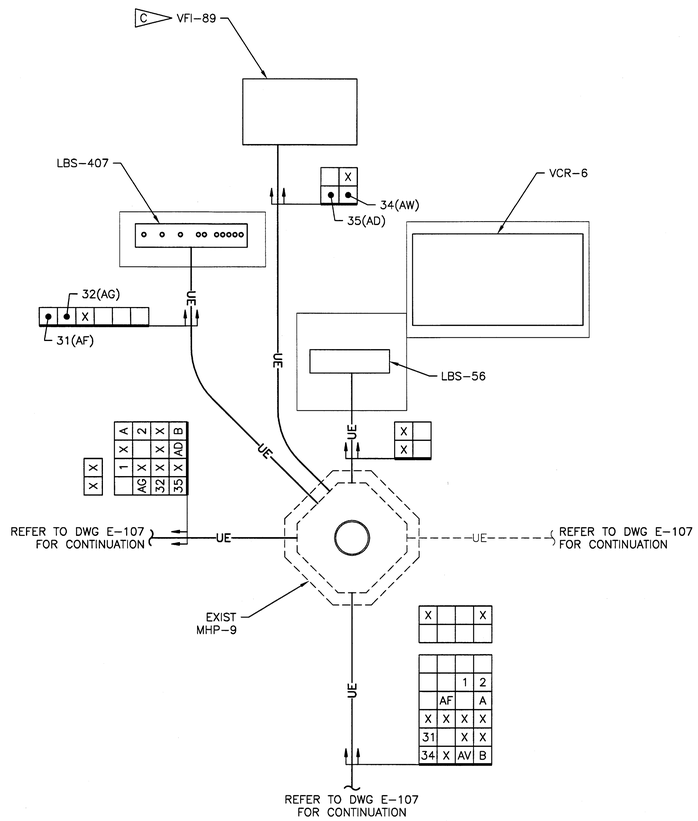

ENLARGED PLAN – MODIFIED (1 / E-107)

SCALE 1" = 5' – 0"

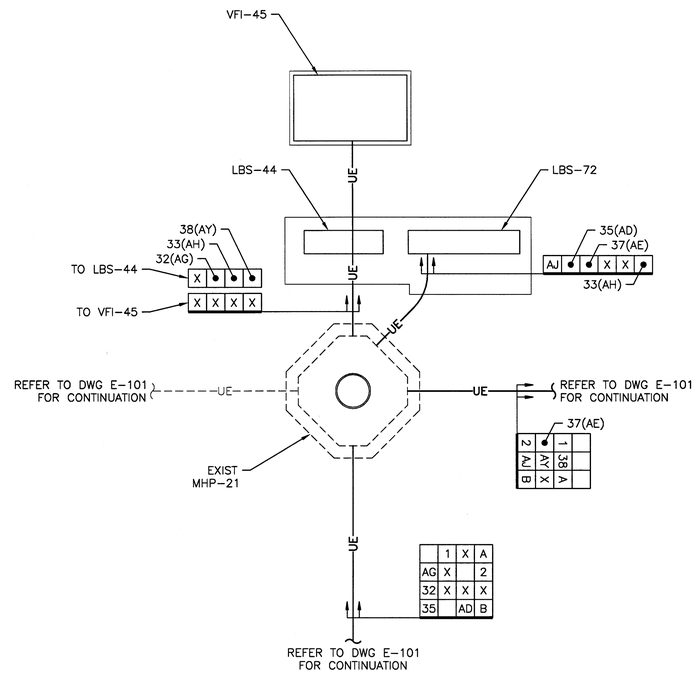

ENLARGED PLAN – MODIFIED (2 / E-101)

SCALE 1" = 5' – 0"

SPECIFIC NOTES:

A. REFER TO DWG. E-001 FOR GENERAL NOTES AND E-002 FOR SYMBOLS LEGEND.

B. REFER TO DWG. E-003 AND E-004 FOR CABLE SCHEDULES.

C CONTRACTOR TO FIELD VERIFY EXACT LOCATION OF VFI-89 BEING INSTALLED UNDER SEPARATE CONTRACT.

SYM.	ZONE	DESCRIPTION	DATE	APPROVED

REVISIONS

URS

7650 West Courtney Campbell Causeway
Suite 700
Tampa, Florida 33607
Ph: (813) 286-1711 Fax: (813) 286-6587
Florida Engineering Number: 000002

SIGNATURES		DATE
DRAWN	TRS	9/24/12
CHECKED	GSK	9/24/12
SUBMITTED	GLENN H. DAVIS	9/24/12
ST OF LICENSURE: FL		
LICENSE NO.: 66443		
APPROVED	F. WALKER	9/27/12
	S. MEHTA	9/25/12

NATIONAL AERONAUTICS AND SPACE ADMINISTRATION
JOHN F. KENNEDY SPACE CENTER, NASA
KENNEDY SPACE CENTER, FLORIDA

REVITALIZE MEDIUM VOLTAGE
ELECTRICAL DISTRIBUTION SYSTEMS,
INDUSTRIAL AND PAYLOAD PROCESSING AREAS

ENLARGED SITE PLAN

E-401

FILE NO.	SIZE	DWG. NO.
	F	79K39135

PCN NO. 98860 SHEET 46

KSC FORM 1-11A (REV 8/91) (C/G 12/93)

NOTICE – WHEN GOVERNMENT DRAWINGS, SPECIFICATIONS, OR OTHER DATA ARE USED FOR ANY PURPOSE OTHER THAN IN CONNECTION WITH A DEFINITELY RELATED GOVERNMENT PROCUREMENT OPERATION, THE UNITED STATES GOVERNMENT THEREBY INCURS NO RESPONSIBILITY, NOR ANY OBLIGATION WHATSOEVER; AND THE FACT THAT THE GOVERNMENT MAY HAVE FORMULATED, FURNISHED, OR IN ANY WAY SUPPLIED THE SAID DRAWINGS, SPECIFICATIONS, OR OTHER DATA, IS NOT TO BE REGARDED BY IMPLICATION OR OTHERWISE AS IN ANY MANNER LICENSING THE HOLDER OR ANY OTHER PERSON OR CORPORATION, OR CONVEYING ANY RIGHTS OR PERMISSION TO MANUFACTURE, USE, OR SELL ANY PATENTED INVENTION THAT MAY IN ANY WAY BE RELATED THERETO.

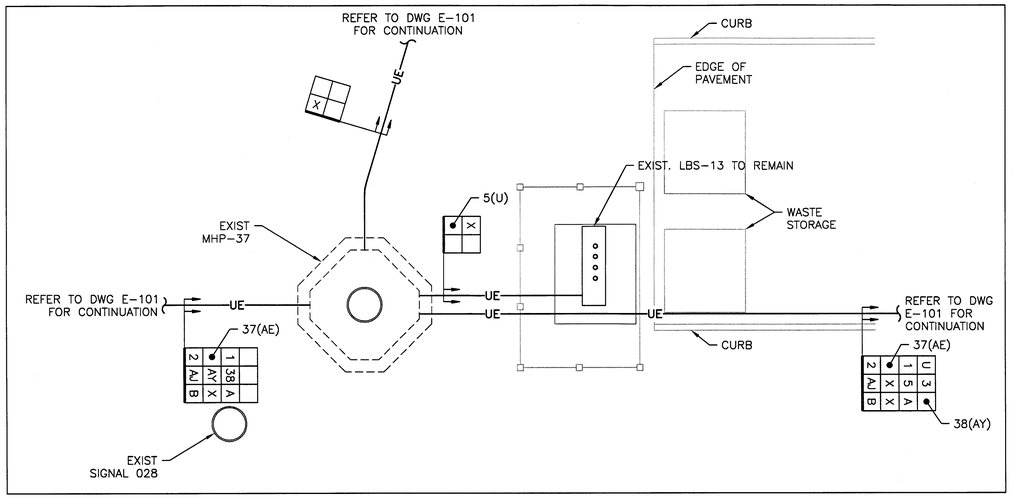

ENLARGED PLAN – MODIFIED (1 / E-101)

SCALE 1" = 5' – 0"

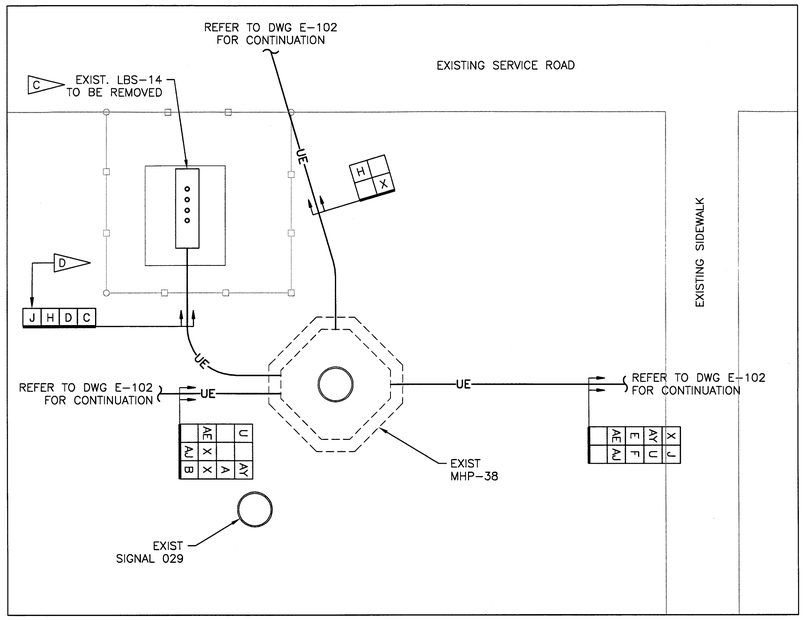

ENLARGED PLAN – DEMOLITION (3 / E-102)

SCALE 1" = 5' – 0"

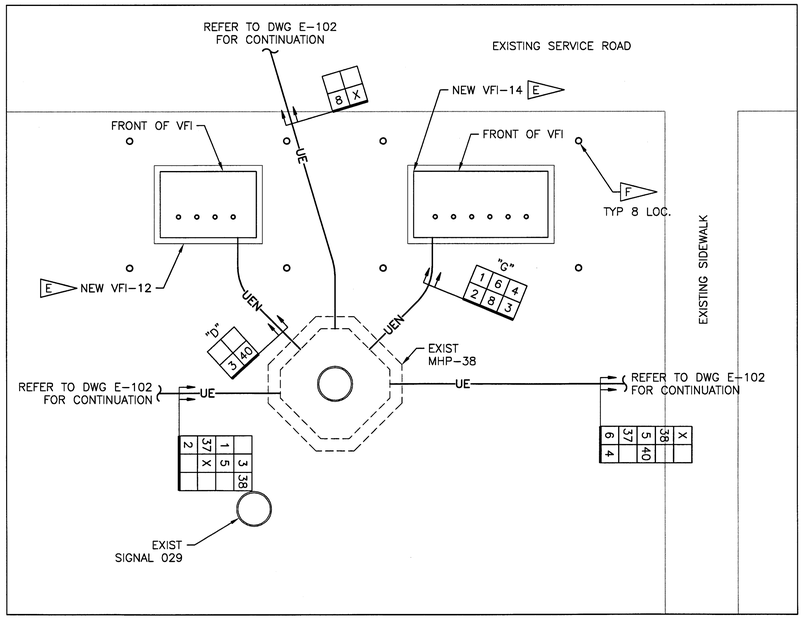

ENLARGED PLAN – MODIFIED (4 / E-102)

SCALE 1" = 5' – 0"

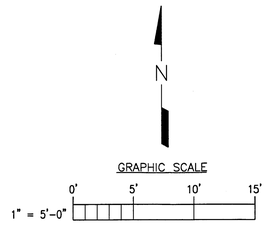

SPECIFIC NOTES:

A. REFER TO DWG. E-001 FOR GENERAL NOTES AND E-002 FOR SYMBOLS LEGEND.

B. REFER TO DWG. E-003 AND E-004 FOR CABLE SCHEDULES.

C. DISCONNECT, REMOVE AND PROPERLY DISPOSE OF SF6 LOAD BREAK SWITCHES. REFER TO DWG. C-107 FOR ADDITIONAL REQUIREMENTS.

D. REMOVE AND PROPERLY DISPOSE OF EXISTING DUCT BANK BETWEEN MANHOLE AND EXISTING LOAD BREAK SWITCH. LEAVE 18" TO 24" OF DUCT BANK ADJACENT TO MANHOLE ABANDONED IN PLACE, PROVIDE WATER PROOF DUCT SEALANT IN EACH ABANDONED RACEWAY PENETRATING MANHOLE.

E. REFER TO DETAIL 1 ON DWG. E-513 FOR ADDITIONAL VFI REQUIREMENTS.

F. PROVIDE BOLLARD. REFER TO BOLLARD DETAIL ON DWG. C-502 FOR ADDITIONAL REQUIREMENTS.

SYM.	ZONE	DESCRIPTION	DATE	APPROVED
		REVISIONS		

URS
7650 West Courtney Campbell Causeway
Suite 700
Tampa, Florida 33607
Ph: (813) 286-1711 Fax: (813) 286-6587
Florida Engineering Number: 000002

SIGNATURES		DATE
DRAWN	TRS	9/24/12
CHECKED	GSK	9/24/12
SUBMITTED GLENN H. DAVIS		9/24/12
ST OF LICENSURE: FL		
LICENSE NO.: 66443		
APPROVED F. WALKER		9/24/12
S. MEHTA		9/25/12

NATIONAL AERONAUTICS AND SPACE ADMINISTRATION
JOHN F. KENNEDY SPACE CENTER, NASA
KENNEDY SPACE CENTER, FLORIDA

REVITALIZE MEDIUM VOLTAGE
ELECTRICAL DISTRIBUTION SYSTEMS,
INDUSTRIAL AND PAYLOAD PROCESSING AREAS

ENLARGED SITE PLAN

FILE NO.	SIZE	DWG. NO.
	F	79K39135
PCN NO. 98860		SHEET 47

E-402

T:\NASA KSC\Task No. T\Jennings\E-402 ENLARGED SITE PLAN.dwg 09/20/2012 1:40
KSC FORM 1-11A (REV 8/91) (C/G 12/93)

NOTICE – WHEN GOVERNMENT DRAWINGS, SPECIFICATIONS, OR OTHER DATA ARE USED FOR ANY PURPOSE OTHER THAN IN CONNECTION WITH A DEFINITELY RELATED GOVERNMENT PROCUREMENT OPERATION, THE UNITED STATES GOVERNMENT THEREBY INCURS NO RESPONSIBILITY, NOR ANY OBLIGATION WHATSOEVER; AND THE FACT THAT THE GOVERNMENT MAY HAVE FORMULATED, FURNISHED, OR IN ANY WAY SUPPLIED THE SAID DRAWINGS, SPECIFICATIONS, OR OTHER DATA IS NOT TO BE REGARDED, BY IMPLICATION OR OTHERWISE AS IN ANY MANNER LICENSING THE HOLDER OR ANY OTHER PERSON OR CORPORATION, OR CONVEYING ANY RIGHTS OR PERMISSION TO MANUFACTURE, USE, OR SELL ANY PATENTED INVENTION THAT MAY IN ANY WAY BE RELATED THERETO.

N

GRAPHIC SCALE
1" = 5'-0" 0' 5' 10' 15'

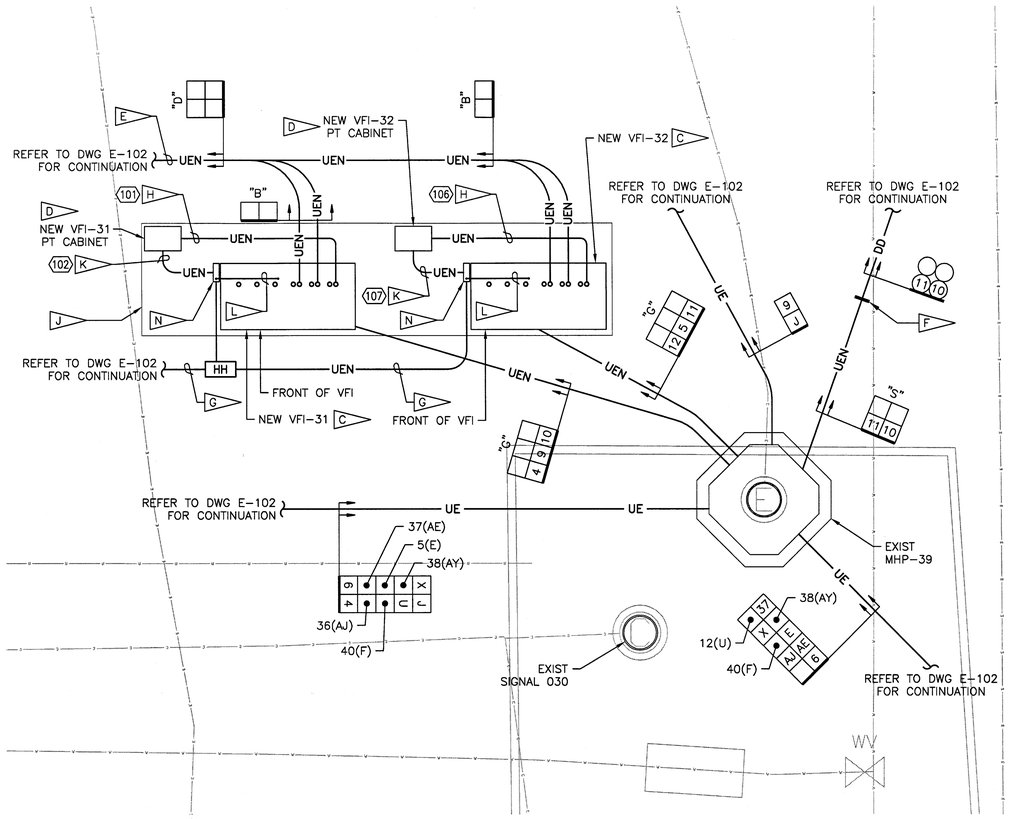

ENLARGED PLAN – MODIFIED (1 / E-102)

SCALE 1" = 5' – 0"

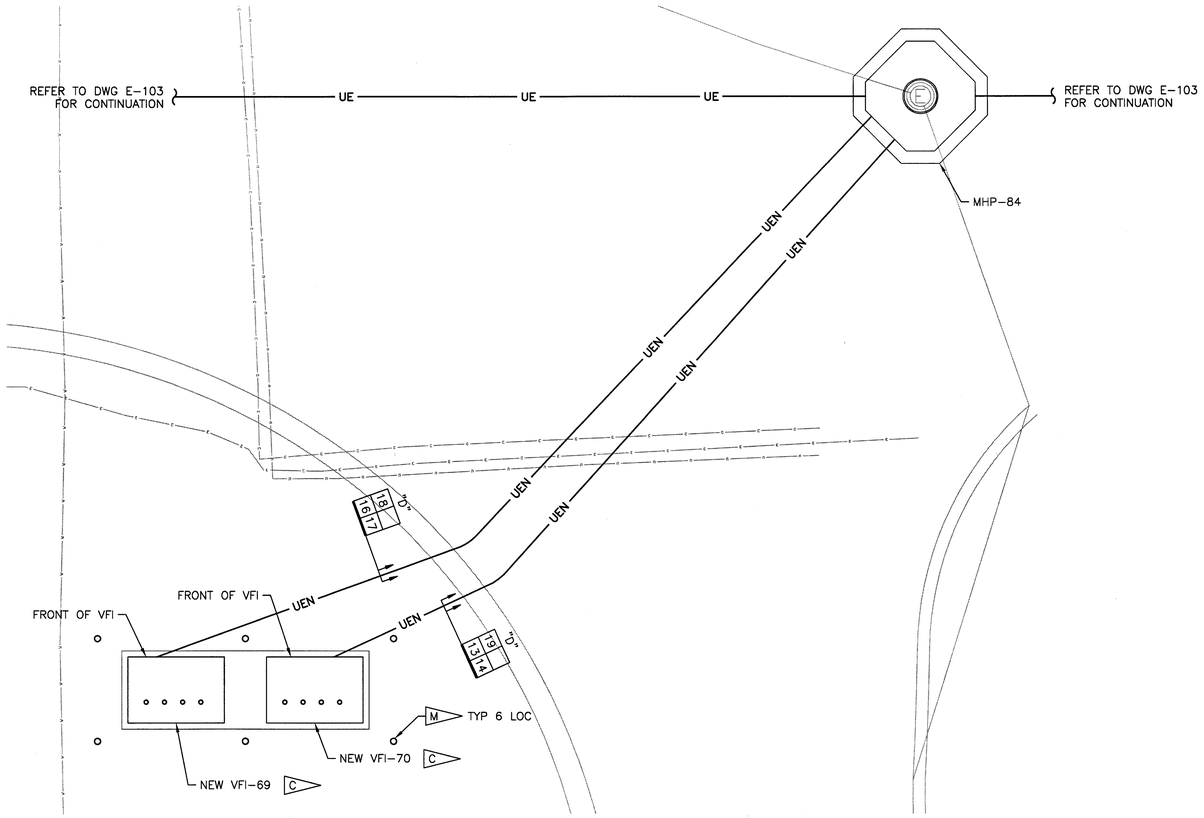

ENLARGED PLAN – MODIFIED (2 / E-103)

SCALE 1" = 5' – 0"

SPECIFIC NOTES:

A. REFER TO DWG. E-001 FOR GENERAL NOTES AND E-002 FOR SYMBOLS LEGEND.

B. REFER TO DWG. E-003 AND E-004 FOR CABLE SCHEDULES.

C. REFER TO DETAIL 1 ON DWG. E-513 FOR ADDITIONAL VFI REQUIREMENTS.

D. PROVIDE 30"X36"X22"D STAINLESS STEEL SECTIONALIZING CABINET COPPER CAT. NO. 00400L00K62A OR APPROVED EQUAL ON A 36"X42" CONCRETE PAD. PROVIDE STAINLESS STEEL CHANNEL SUPPORT TO ELEVATE PT'S, PROVIDE 2 15KV, CLASS 95KV BIL, VOLTAGE TRANSFORMERS TYPE VIL-95 OR APPROVED EQUAL. REFER TO DWG. E-631 FOR ADDITIONAL WIRING REQUIREMENTS.

E. EXTEND DUCT BANK INCLUDING FOUR (4) 5" CONDUITS A MINIMUM OF 20' FROM END OF VFI-31, -32 CONCRETE PAD. EXTEND CONDUITS AND REBAR AN ADDITIONAL 24" WITH END CAPS ON CONDUIT. PROVIDE AN ENGRAVED CONCRETE MONUMENT DIRECTLY ABOVE THE END OF THE CONDUITS. MONUMENT TO BE A MINIMUM OF 12"X12"X12" WITH 10" BELOW GRADE AND 2" ABOVE GRADE. ENGRAVING TO BE MINIMUM 2" LETTERING STATING "13.2kV". ROUTE CONDUITS TO SWITCH POSITIONS AS FOLLOWS: VFI-31/S4, VFI-31/S5, VFI-32/S4, AND VFI-32/S5.

F. DEMARCATION OF TRANSITION BETWEEN CONCRETE ENCASED HDPE CONDUIT AND HDPE DIRECTIONALLY BORED CONDUIT.

SPECIFIC NOTES CONT.:

G. PROVIDE 1 1/2" COMMUNICATIONS CONDUIT, DIRECT BURIED AND EXPOSED, BETWEEN VFI-31 AND -32 METERING CABINETS AND EXISTING COMMUNICATIONS RACK INSIDE AUDITORIUM AND TRAINING BUILDING M7-351 COMMUNICATIONS ROOM 123. PROVIDE SCH. 80 PVC CONDUIT WHERE DIRECT BURIED AND GRS CONDUIT WHERE EXPOSED. WHERE CONDUIT IS DIRECT BURIED, PROVIDE A MINIMUM OF 24" EARTH COVER. TRANSITION SCH. 80 PVC CONDUIT TO PVC COATED GRS CONDUIT AT LAST 90 DEG. ELBOW BEFORE RISING UP AND EMERGING FROM GRADE.

H. PROVIDE 4" SCHED. 80 PVC CONDUIT 30" BELOW GRADE WITH A 12"W, 3"D CONCRETE CAP 12" ABOVE IT.

J. EXTEND CONCRETE PAD A MINIMUM OF 18" BETWEEN SWITCH ENCLOSURE AND EDGE OF CONCRETE PAD ON THE SIDE OF THE VFI WHERE METERING CABINETS ARE INSTALLED.

K. PROVIDE ONE 1" SCH. 80 PVC CONDUIT DIRECT BURIED BETWEEN PT CABINET AND METERING CABINET.

L. PROVIDE 1" CONDUIT BETWEEN METERING TERMINAL BOX AND VFI SWITCH POSITION S3. PROVIDE SCH. 80 PVC CONDUIT WHERE DIRECT BURIED AND GRS CONDUIT WHERE EXPOSED. WHERE CONDUIT IS DIRECT BURIED, PROVIDE A MINIMUM OF 24" EARTH COVER. TRANSITION SCH. 80 PVC CONDUIT TO PVC COATED GRS CONDUIT AT LAST 90 DEG. ELBOW BEFORE RISING UP AND EMERGING FROM GRADE.

M. PROVIDE BOLLARD. REFER TO BOLLARD DETAIL ON DWG. C-502 FOR ADDITIONAL REQUIREMENTS.

N. PROVIDE NEMA TYPE 4X 316SS METERING CABINET WITH POWER METER.

SYM.	ZONE	DESCRIPTION	DATE	APPROVED
		REVISIONS		

URS
7650 West Courtney Campbell Causeway
Suite 700
Tampa, Florida 33607
Ph: (813) 286-1711 Fax: (813) 286-6587
Florida Engineering Number: 000002

SIGNATURES		DATE
DRAWN	TRS	9/24/12
CHECKED	GSK	9/24/12
SUBMITTED	Glenn H. Davis GLENN H. DAVIS	9/24/12
ST OF LICENSURE: FL		
LICENSE NO.: 66443		
APPROVED	F. Walker F. WALKER	9/26/12
	Sandip Mehta S. MEHTA	9/25/12

NATIONAL AERONAUTICS AND SPACE ADMINISTRATION
JOHN F. KENNEDY SPACE CENTER, NASA
KENNEDY SPACE CENTER, FLORIDA

REVITALIZE MEDIUM VOLTAGE
ELECTRICAL DISTRIBUTION SYSTEMS,
INDUSTRIAL AND PAYLOAD PROCESSING AREAS

ENLARGED SITE PLAN

E-403

FILE NO.	SIZE	DWG. NO.
	F	79K39135
PCN NO. 98860		SHEET 48

T:\NASA KSC\Task No. 1\Drawings\E-403 ENLARGED SITE PLAN.dwg 09/26/2012 14:03

KSC FORM 1-11A (REV 6/91) (C/G 12/93)

NOTICE – WHEN GOVERNMENT DRAWINGS, SPECIFICATIONS, OR OTHER DATA ARE USED FOR ANY PURPOSE OTHER THAN IN CONNECTION WITH A DEFINITELY RELATED GOVERNMENT PROCUREMENT OPERATION, THE UNITED STATES GOVERNMENT THEREBY INCURS NO RESPONSIBILITY NOR ANY OBLIGATION WHATSOEVER; AND THE FACT THAT THE GOVERNMENT MAY HAVE FORMULATED, FURNISHED, OR IN ANY WAY SUPPLIED THE SAID DRAWINGS, SPECIFICATIONS, OR OTHER DATA IS NOT TO BE REGARDED BY IMPLICATION OR OTHERWISE AS IN ANY MANNER LICENSING THE HOLDER OR ANY OTHER PERSON OR CORPORATION, OR CONVEYING ANY RIGHTS OR PERMISSION TO MANUFACTURE, USE, OR SELL ANY PATENTED INVENTION THAT MAY IN ANY WAY BE RELATED THERETO.

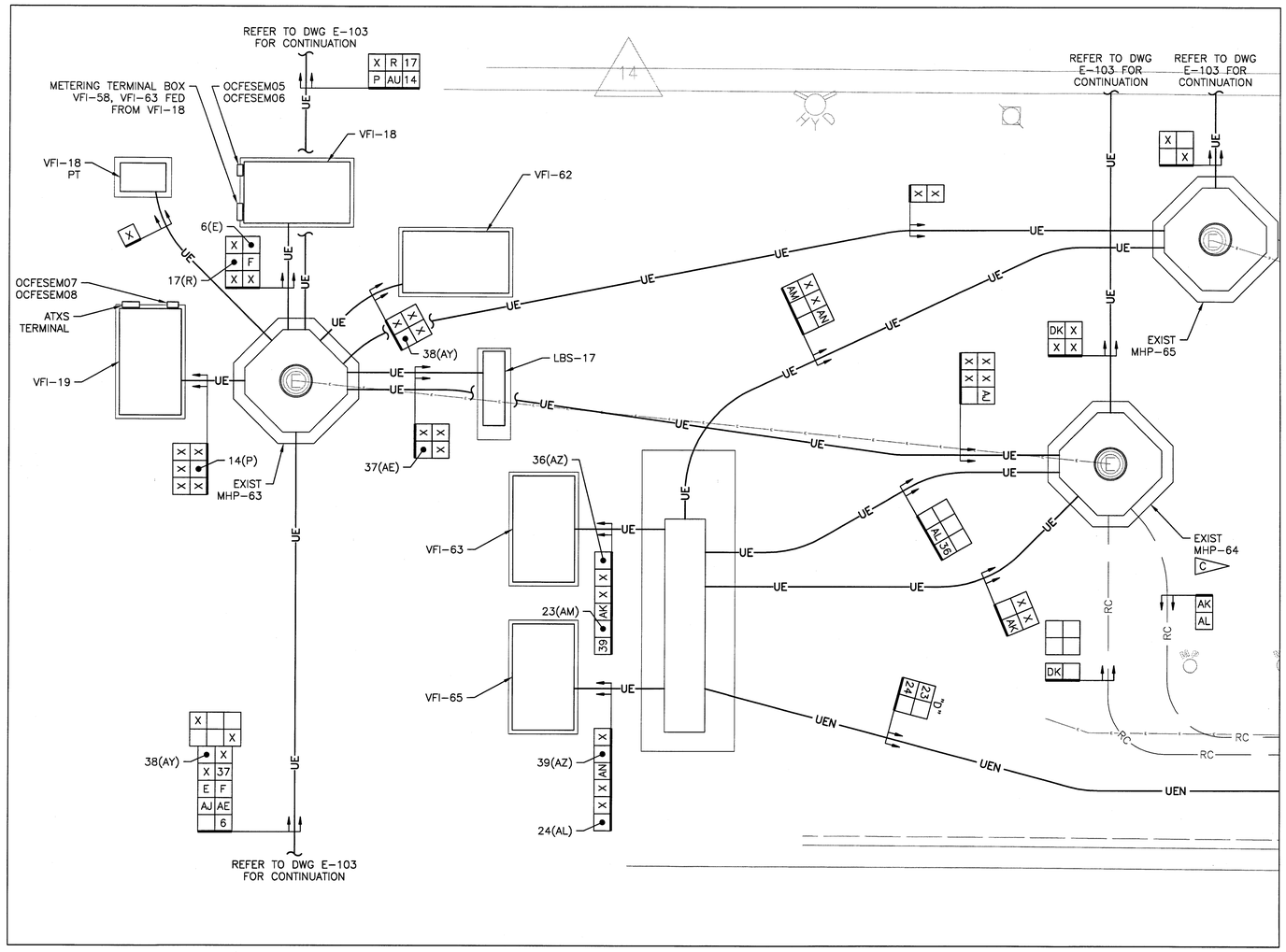

ENLARGED PLAN – MODIFIED (1 / E-103)

SCALE 1" = 5' – 0"

N

GRAPHIC SCALE

0' 5' 10' 15'

1" = 5'-0"

SPECIFIC NOTES:

A. REFER TO DWG. E-001 FOR GENERAL NOTES AND E-002 FOR SYMBOLS LEGEND.

B. REFER TO DWG. E-003 AND E-004 FOR CABLE SCHEDULES.

C. SPLICE NEW CABLE "36" (3-1/C EPR) TO EXISTING CABLE "AJ" (1-3/C PILC) WITHIN MHP-64 VIA TRIFURCATING TYPE SPLICE.

SYM.	ZONE	DESCRIPTION	DATE	APPROVED
		REVISIONS		

URS
7650 West Courtney Campbell Causeway
Suite 700
Tampa, Florida 33607
Ph: (813) 286-1711 Fax: (813) 286-6587
Florida Engineering Number: 000002

SIGNATURES		DATE
DRAWN	TRS	9/24/12
CHECKED	GSK	9/24/12
SUBMITTED	GLENN H. DAVIS	9/24/12
ST OF LICENSURE: FL		
LICENSE NO.: 66443		
APPROVED	F. WALKER	9/24/12
	S. MEHTA	9/25/12

NATIONAL AERONAUTICS AND SPACE ADMINISTRATION
JOHN F. KENNEDY SPACE CENTER, NASA
KENNEDY SPACE CENTER, FLORIDA

REVITALIZE MEDIUM VOLTAGE
ELECTRICAL DISTRIBUTION SYSTEMS,
INDUSTRIAL AND PAYLOAD PROCESSING AREAS

ENLARGED SITE PLAN – PAD
SOUTH O&C

FILE NO.	SIZE	DWG. NO.
	F	79K39135
PCN NO. 98860		SHEET 49

E-404

KSC FORM 1-11A (REV 8/91) (C/G 12/93)

T:\NASA REV\Tan No. T:\Drawings\E-404 E-412 ENLARGED SITE PLANS.dwg 09/20/2012 14:03

NOTICE – WHEN GOVERNMENT DRAWINGS, SPECIFICATIONS, OR OTHER DATA ARE USED FOR ANY PURPOSE OTHER THAN IN CONNECTION WITH A DEFINITELY RELATED GOVERNMENT PROCUREMENT OPERATION, THE UNITED STATES GOVERNMENT THEREBY INCURS NO RESPONSIBILITY NOR ANY OBLIGATION WHATSOEVER; AND THE FACT THAT THE GOVERNMENT MAY HAVE FORMULATED, FURNISHED, OR IN ANY WAY SUPPLIED THE SAID DRAWINGS, SPECIFICATIONS OR OTHER DATA IS NOT TO BE REGARDED BY IMPLICATION OR OTHERWISE AS IN ANY MANNER LICENSING THE HOLDER OR ANY OTHER PERSON OR CORPORATION, OR CONVEYING ANY RIGHTS OR PERMISSION TO MANUFACTURE, USE OR SELL ANY PATENTED INVENTION THAT MAY IN ANY WAY BE RELATED THERETO.

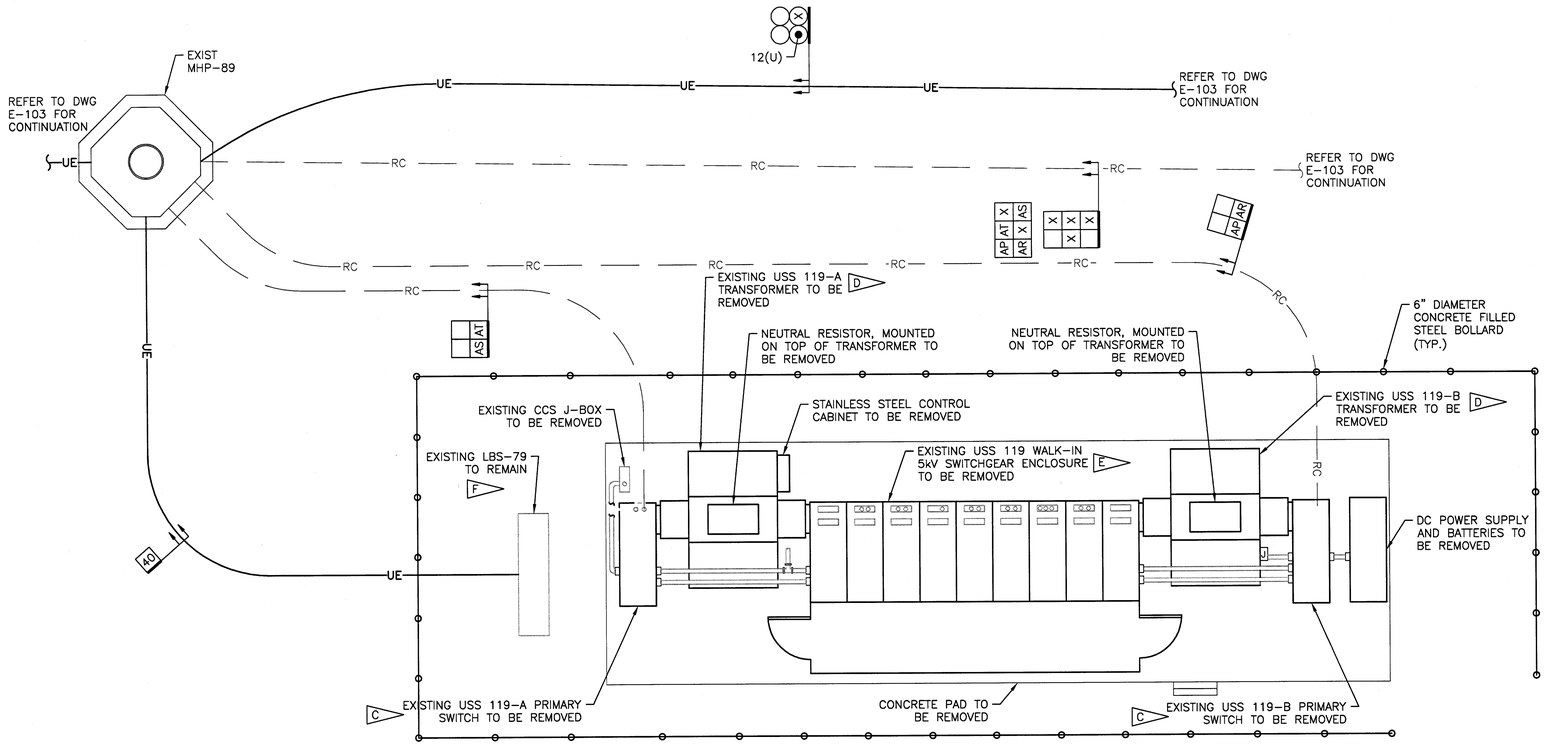

ENLARGED PLAN – DEMOLITION (1 / E-103)

SCALE 1" = 5' – 0"

N

GRAPHIC SCALE

0' 5' 10' 15'

1" = 5'-0"

SPECIFIC NOTES:

A. REFER TO DWG. E-001 FOR GENERAL NOTES AND E-002 FOR SYMBOLS LEGEND.

B. REFER TO DWG. E-003 AND E-004 FOR CABLE SCHEDULES.

C. DISCONNECT, REMOVE AND PROPERLY DISPOSE OF EXISTING PRIMARY SWITCH AND APPURTENANCES.

D. DISCONNECT, REMOVE AND PROPERLY DISPOSE OF EXISTING TRANSFORMER AND APPURTENANCES, REFER TO GENERAL NOTES FOR ADDITIONAL TESTING REQUIRED PRIOR TO REMOVAL.

E. DISCONNECT, REMOVE AND PROPERLY DISPOSE OF EXISTING SECONDARY (5kV) SWITCHGEAR AND APPURTENANCES. REMOVE ALL CABLES BETWEEN SWITCHGEAR AND THE IACP (M7-407). REFER TO DWGS E-432 AND E-433 FOR ADDITIONAL REQUIREMENTS.

F. CONNECT NEW CABLE "40" TO SWITCH LBS-79/S3. FIELD LOCATE EXISTING DUCT ASSOCIATED WITH SWITCH POSITION S3. REMOVE EXISTING POTHEAD AND PROVIDE NEW EPR CONNECTORS AS REQUIRED.

G. REFER TO DWG. C-105 FOR ADDITIONAL DEMOLITION REQUIREMENTS.

SYM.	ZONE	DESCRIPTION	DATE	APPROVED
		REVISIONS		

URS
7650 West Courtney Campbell Causeway
Suite 700
Tampa, Florida 33607
Ph: (813) 286-1711 Fax: (813) 286-6587
Florida Engineering Number: 000002

SIGNATURES		DATE
DRAWN	TRS	9/24/12
CHECKED	GSK	9/24/12
SUBMITTED	GLENN H. DAVIS	9/24/12
ST OF LICENSURE: FL		
LICENSE NO.: 66443		
APPROVED	F. WALKER	9/25/12
	S. MEHTA	9/25/12

NATIONAL AERONAUTICS AND SPACE ADMINISTRATION
JOHN F. KENNEDY SPACE CENTER, NASA
KENNEDY SPACE CENTER, FLORIDA

REVITALIZE MEDIUM VOLTAGE ELECTRICAL DISTRIBUTION SYSTEMS, INDUSTRIAL AND PAYLOAD PROCESSING AREAS

ENLARGED SITE PLAN

E-405

FILE NO.	SIZE	DWG. NO.
	F	79K39135
PCN NO. 98860		SHEET 50

KSC FORM 1-11A (REV 8/91) (C/G 12/93)

NOTICE – WHEN GOVERNMENT DRAWINGS, SPECIFICATIONS, OR OTHER DATA ARE USED FOR ANY PURPOSE OTHER THAN IN CONNECTION WITH A DEFINITELY RELATED GOVERNMENT PROCUREMENT OPERATION, THE UNITED STATES GOVERNMENT THEREBY INCURS NO RESPONSIBILITY NOR ANY OBLIGATION WHATSOEVER; AND THE FACT THAT THE GOVERNMENT MAY HAVE FORMULATED, FURNISHED, OR IN ANY WAY SUPPLIED THE SAID DRAWINGS, SPECIFICATIONS OR OTHER DATA, IS NOT TO BE REGARDED BY IMPLICATION OR OTHERWISE AS IN ANY MANNER LICENSING THE HOLDER OR ANY OTHER PERSON OR CORPORATION, OR CONVEYING ANY RIGHTS OR PERMISSION TO MANUFACTURE, USE, OR SELL ANY PATENTED INVENTION THAT MAY IN ANY WAY BE RELATED THERETO.

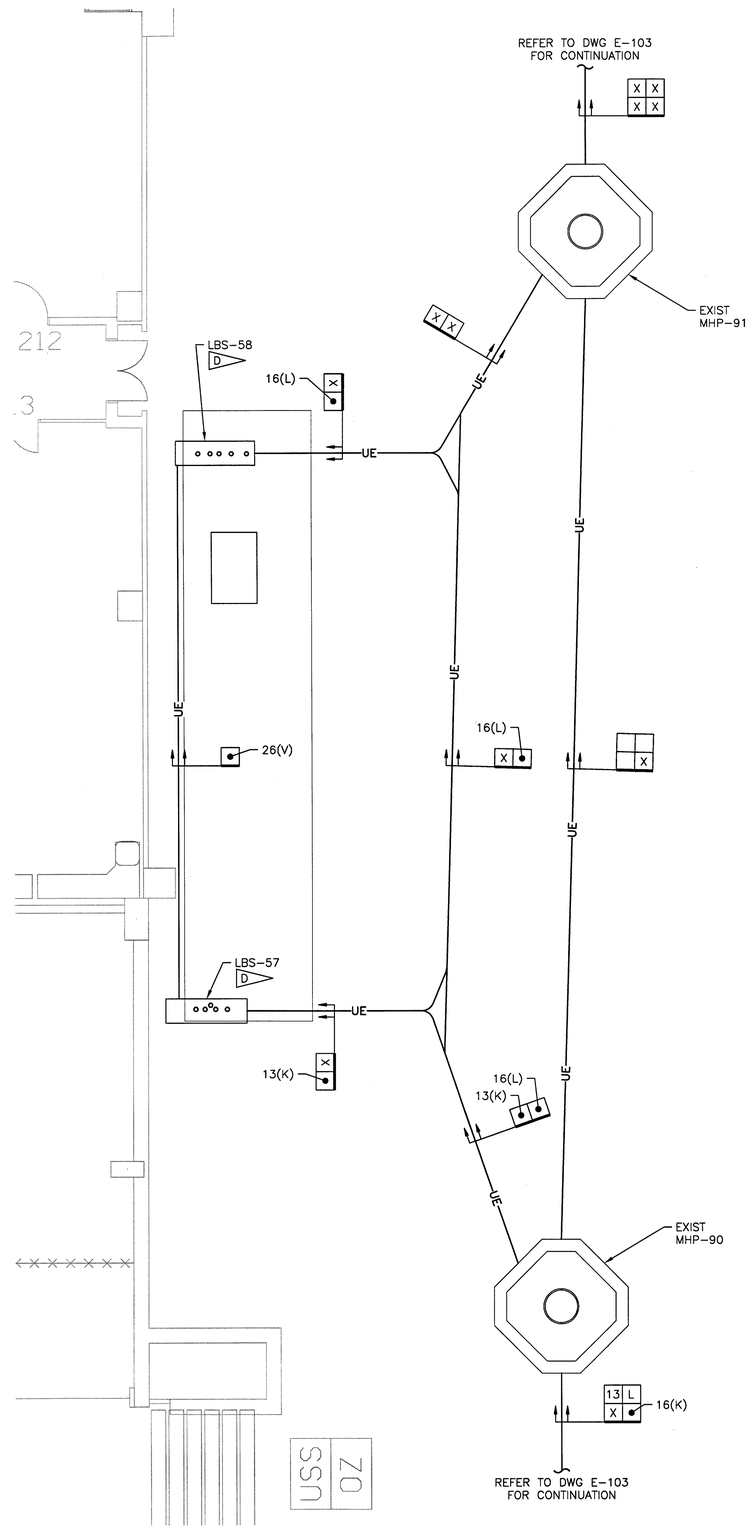

ENLARGED PLAN – MODIFIED (1 / E-103)

SCALE 1" = 5' – 0"

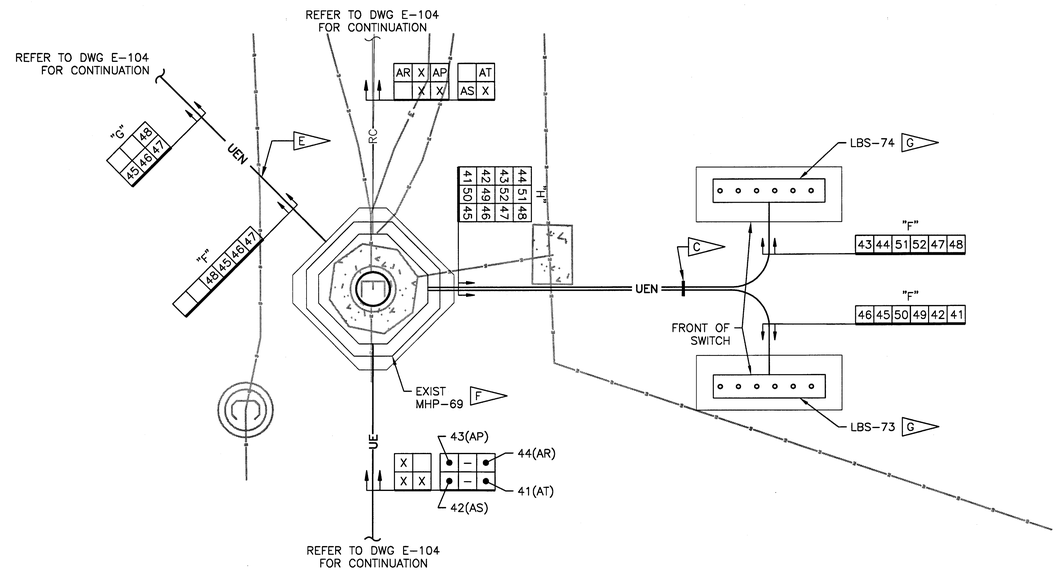

ENLARGED PLAN – MODIFIED (2 / E-104)

SCALE 1" = 5' – 0"

N

GRAPHIC SCALE

0' 5' 10' 15'

1" = 5'-0"

SPECIFIC NOTES:

A. REFER TO DWG. E-001 FOR GENERAL NOTES AND E-002 FOR SYMBOLS LEGEND.

B. REFER TO DWG. E-003 AND E-004 FOR CABLE SCHEDULES.

C. TRANSITION FROM TYPE "H" DUCT BANK ARRANGEMENT TO TWO(2) TYPE "F" ARRANGED DUCT BANKS.

D. DISCONNECT, REMOVE AND PROPERLY DISPOSE OF EXISTING SF6 LOAD BREAK SWITCH AND APPURTENANCES. PROVIDE NEW VAULT STYLE LBS. REFER TO DETAIL 3 ON DWG. E-514 FOR ADDITIONAL REQUIREMENTS. ALIGN NEW LBS IN SAME LOCATION OF EXISTING, RE-USING EXISTING CONDUIT STUB-UPS AND GROUND ROD WITHIN ENCLOSED SPACE BELOW LBS. PROVIDE NEW GROUNDING BUSHINGS ON EACH CONDUIT STUB-UP BELOW LBS.

E. TRANSITION FROM TYPE "F" DUCT BANK ARRANGEMENT TO TYPE "G" DUCT BANK ARRANGEMENT AFTER PASSING UNDER EXISTING COMM. DUCT BANK.

F. PROVIDE SPLICES IN MANHOLE MHP-69. SPLICE NEW CABLES "49", "50", "51", AND "52" TO EXISTING CABLES "AS", "AT", "AP", AND "AR" RESPECTIVELY.

G. PROVIDE NEW VAULT STYLE LBS. REFER TO DETAIL 3 ON DWG. E-514 FOR ADDITIONAL REQUIREMENTS.

SYM.	ZONE	DESCRIPTION	DATE	APPROVED
		REVISIONS		

URS

7650 West Courtney Campbell Causeway
Suite 700
Tampa, Florida 33607
Ph: (813) 286-1711 Fax: (813) 286-6587
Florida Engineering Number: 000002

SIGNATURES		DATE
DRAWN	TRS	9/24/12
CHECKED	GSK	9/24/12
SUBMITTED	GLENN H. DAVIS	9/24/12
ST OF LICENSURE: FL		
LICENSE NO.: 66443		
APPROVED	F. WALKER	9/24/12
	S. MEHTA	9/25/12

NATIONAL AERONAUTICS AND SPACE ADMINISTRATION
JOHN F. KENNEDY SPACE CENTER, NASA
KENNEDY SPACE CENTER, FLORIDA

REVITALIZE MEDIUM VOLTAGE
ELECTRICAL DISTRIBUTION SYSTEMS,
INDUSTRIAL AND PAYLOAD PROCESSING AREAS

ENLARGED SITE PLAN

E-406

FILE NO.	SIZE	DWG. NO.
	F	79K39135
PCN NO. 98860		SHEET 51

KSC FORM 1-11A (REV 8/91) (C/G 12/93)

T:\NASA KSC\Task No. 1\Drawings\E-406 ENLARGED SITE PLAN.dwg 09/20/2012 14:04

NOTICE – WHEN GOVERNMENT DRAWINGS, SPECIFICATIONS, OR OTHER DATA ARE USED FOR ANY PURPOSE OTHER THAN IN CONNECTION WITH A DEFINITELY RELATED GOVERNMENT PROCUREMENT OPERATION, THE UNITED STATES GOVERNMENT THEREBY INCURS NO RESPONSIBILITY NOR ANY OBLIGATION WHATSOEVER; AND THE FACT THAT THE GOVERNMENT MAY HAVE FORMULATED, FURNISHED, OR IN ANY WAY SUPPLIED THE SAID DRAWINGS, SPECIFICATIONS, OR OTHER DATA IS NOT TO BE REGARDED BY IMPLICATION OR OTHERWISE AS IN ANY MANNER LICENSING THE HOLDER OR ANY OTHER PERSON OR CORPORATION, OR CONVEYING ANY RIGHTS OR PERMISSION TO MANUFACTURE, USE, OR SELL ANY PATENTED INVENTION THAT MAY IN ANY WAY BE RELATED THERETO.

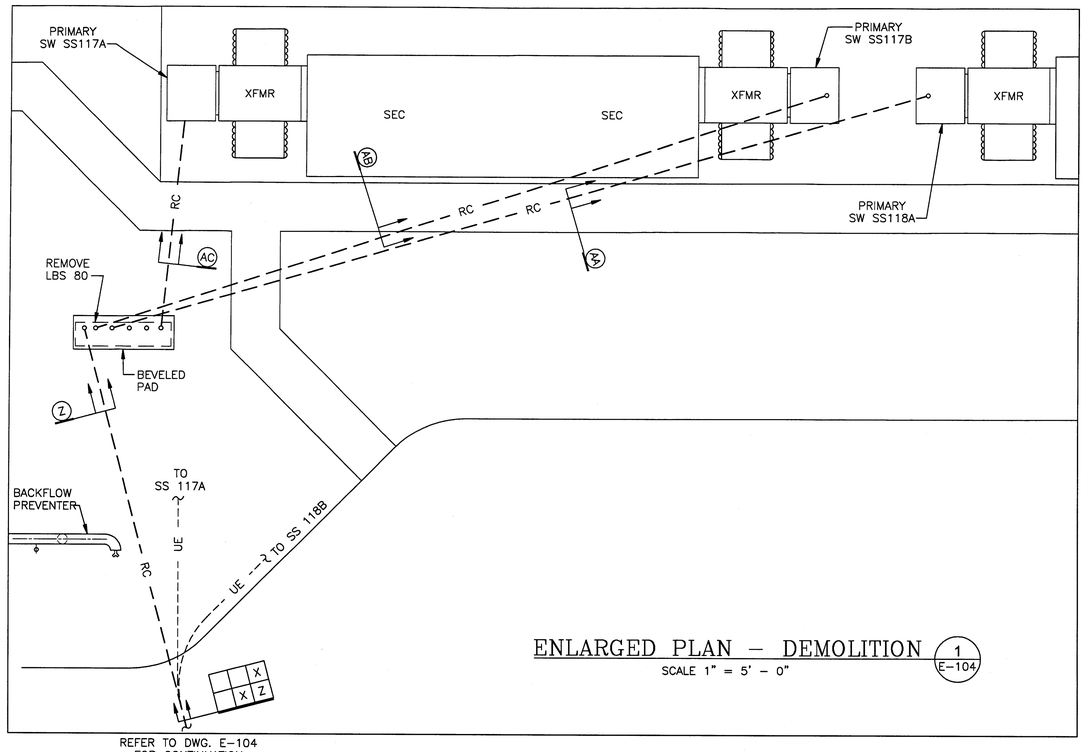

ENLARGED PLAN – DEMOLITION (1 / E-104)

SCALE 1" = 5' – 0"

REFER TO DWG. E-104 FOR CONTINUATION

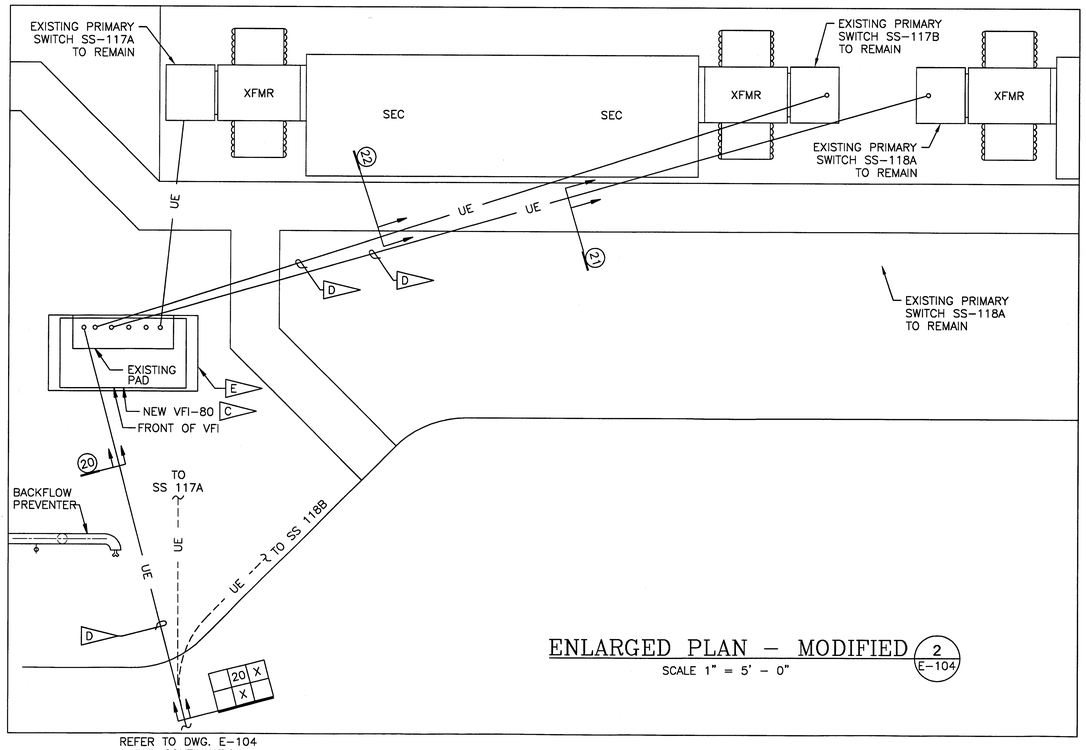

ENLARGED PLAN – MODIFIED (2 / E-104)

SCALE 1" = 5' – 0"

REFER TO DWG. E-104 FOR CONTINUATION

N

GRAPHIC SCALE

0' 5' 10' 15'

1" = 5'-0"

SPECIFIC NOTES:

A. FOR LEGEND AND GENERAL NOTES AND E-002 FOR SYMBOLS LEGEND.

B. REFER TO DWG. E-003 AND E-004 FOR CABLE SCHEDULES.

C. REFER TO DETAIL 1 ON DWG. E-513 FOR ADDITIONAL VFI REQUIREMENTS.

D. ALIGN EXISTING CONDUITS, PRESENTLY AT POSITIONS S1, S2, AND S3, TO POSITIONS S2, S3, AND S4.

E. REFER TO DETAIL 1 ON DWG. E-514 FOR VFI PAD MODIFICATION.

SYM.	ZONE	DESCRIPTION	DATE	APPROVED

REVISIONS

URS
7650 West Courtney Campbell Causeway
Suite 700
Tampa, Florida 33607
Ph: (813) 286-1711 Fax: (813) 286-6587
Florida Engineering Number: 000002

SIGNATURES		DATE
DRAWN	TRS	9/24/12
CHECKED	GSK	9/24/12
SUBMITTED	GLENN H. DAVIS	9/24/12
ST OF LICENSURE: FL		
LICENSE NO.: 66443		
APPROVED	F. WALKER	9/24/12
	S. MEHTA	9/24/12

NATIONAL AERONAUTICS AND SPACE ADMINISTRATION
JOHN F. KENNEDY SPACE CENTER, NASA
KENNEDY SPACE CENTER, FLORIDA

REVITALIZE MEDIUM VOLTAGE ELECTRICAL DISTRIBUTION SYSTEMS, INDUSTRIAL AND PAYLOAD PROCESSING AREAS

ENLARGED SITE PLAN – LBS-80

FILE NO.	SIZE	DWG. NO.
	F	79K39135
PCN NO. 98860		SHEET 52

E-407

T:\NASA KSC\Task No. 1\Drawings\E-407 ENLARGED SI PLAN.dwg 09/20/2012 14:04

KSC FORM 1-11A (REV 8/91) (C/G 12/93)

NOTICE – WHEN GOVERNMENT DRAWINGS, SPECIFICATIONS, OR OTHER DATA ARE USED FOR ANY PURPOSE OTHER THAN IN CONNECTION WITH A DEFINITELY RELATED GOVERNMENT PROCUREMENT OPERATION, THE UNITED STATES GOVERNMENT THEREBY INCURS NO RESPONSIBILITY NOR ANY OBLIGATION WHATSOEVER; AND THE FACT THAT THE GOVERNMENT MAY HAVE FORMULATED, FURNISHED, OR IN ANY WAY SUPPLIED THE SAID DRAWINGS, SPECIFICATIONS, OR OTHER DATA, IS NOT TO BE REGARDED BY IMPLICATION OR OTHERWISE AS IN ANY MANNER LICENSING THE HOLDER OR ANY OTHER PERSON OR CORPORATION, OR CONVEYING ANY RIGHTS OR PERMISSION TO MANUFACTURE, USE, OR SELL ANY PATENTED INVENTION THAT MAY IN ANY WAY BE RELATED THERETO.

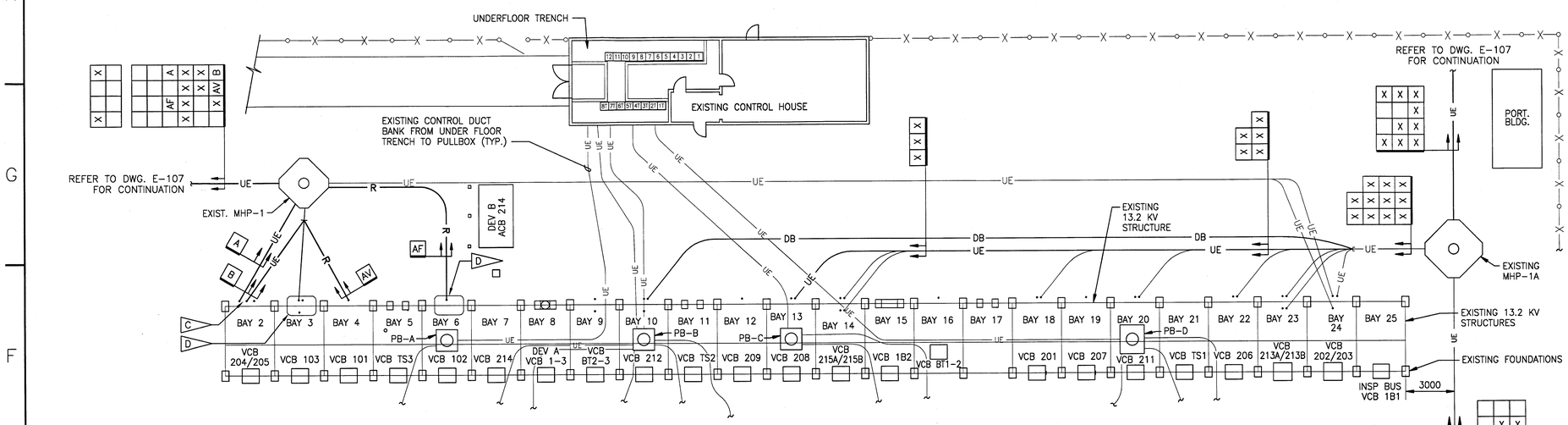

ENLARGED PLAN – ORSINO SUBSTATION – DEMOLITION

NOT TO SCALE

1 / E-107

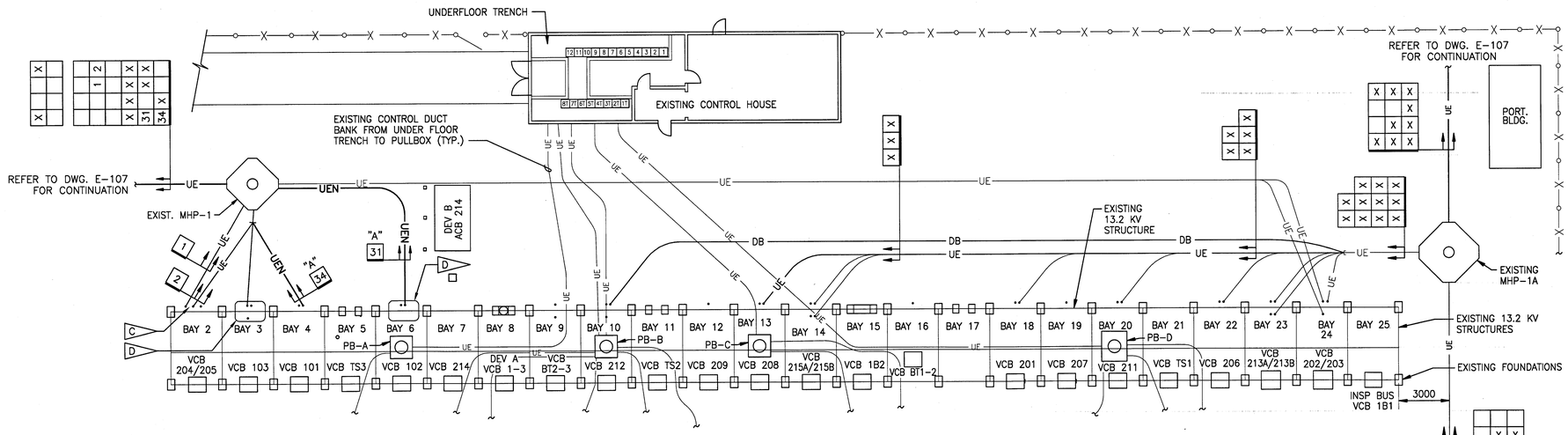

ENLARGED PLAN – ORSINO SUBSTATION – MODIFIED

NOT TO SCALE

2 / E-107

SPECIFIC NOTES:

A. REFER TO DWG. E-001 FOR GENERAL NOTES AND E-002 FOR SYMBOLS LEGEND.

B. REFER TO DWG. E-003 AND E-004 FOR CABLE SCHEDULES.

C. REUSE EXISTING CONDUITS FROM MHP-1 TO AIR BUS STRUCTURE TO ROUTE NEW CABLES "1" AND "2".

D. REFER TO DETAIL 5 ON DWG. E-512 FOR ADDITIONAL REQUIREMENTS FOR CABLE/CONDUIT REPLACEMENTS AT AIR BUS STRUCTURE.

SYM.	ZONE	DESCRIPTION	DATE	APPROVED
		REVISIONS		

URS
7650 West Courtney Campbell Causeway
Suite 700
Tampa, Florida 33607
Ph: (813) 286-1711 Fax: (813) 286-6587
Florida Engineering Number: 000002

SIGNATURES		DATE
DRAWN	TRS	9/24/12
CHECKED	GSK	9/24/12
SUBMITTED	GLENN H. DAVIS	9/24/12
ST OF LICENSURE: FL		
LICENSE NO.: 66443		
APPROVED	F. WALKER	9/24/12
	S. MEHTA	9/25/12

NATIONAL AERONAUTICS AND SPACE ADMINISTRATION
JOHN F. KENNEDY SPACE CENTER, NASA
KENNEDY SPACE CENTER, FLORIDA

REVITALIZE MEDIUM VOLTAGE ELECTRICAL DISTRIBUTION SYSTEMS, INDUSTRIAL AND PAYLOAD PROCESSING AREAS

ENLARGED SITE PLAN – ORSINO SUBSTATION

E-411

FILE NO.	SIZE	DWG. NO.
	F	79K39135
PCN NO. 98860		SHEET 53

T:\VAGA KSC\Task No. 1\Licensing\E-411 ENLARGED SITE PLAN - ORSINO SUBSTATION.dwg 09/25/2012 16:23

KSC FORM 1-11A (REV 6/91) (C/C 12/93)

NOTICE - WHEN GOVERNMENT DRAWINGS, SPECIFICATIONS, OR OTHER DATA ARE USED FOR ANY PURPOSE OTHER THAN IN CONNECTION WITH A DEFINITELY RELATED GOVERNMENT PROCUREMENT OPERATION, THE UNITED STATES GOVERNMENT THEREBY INCURS NO RESPONSIBILITY NOR ANY OBLIGATION WHATSOEVER; AND THE FACT THAT THE GOVERNMENT MAY HAVE FORMULATED, FURNISHED, OR IN ANY WAY SUPPLIED THE SAID DRAWINGS, SPECIFICATIONS, OR OTHER DATA IS NOT TO BE REGARDED BY IMPLICATION OR OTHERWISE AS IN ANY MANNER LICENSING THE HOLDER OR ANY OTHER PERSON OR CORPORATION, OR CONVEYING ANY RIGHTS OR PERMISSION TO MANUFACTURE, USE, OR SELL ANY PATENTED INVENTION THAT MAY IN ANY WAY BE RELATED THERETO.

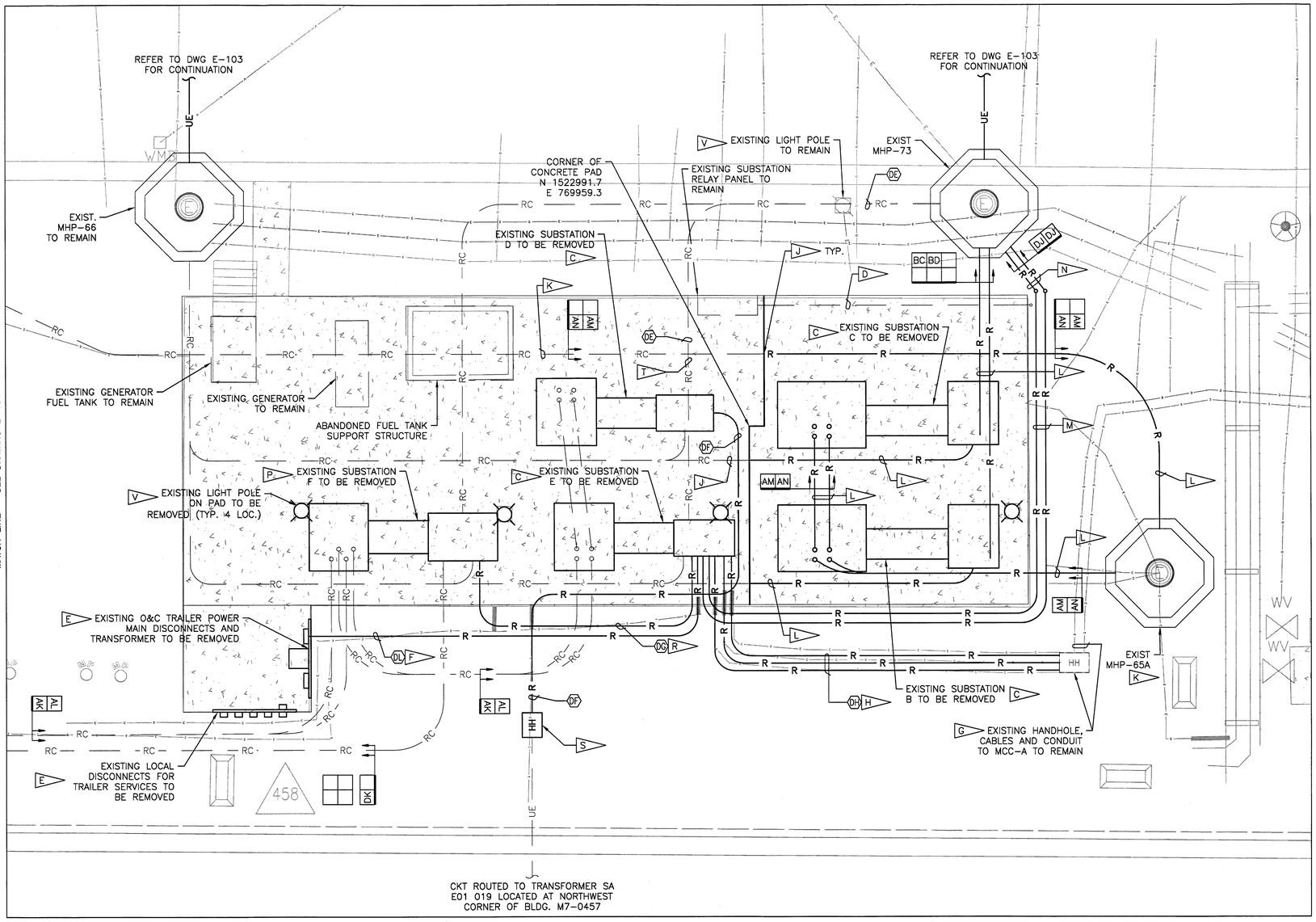

ENLARGED PLAN – DEMOLITION (1 / E-103)

SCALE 1" = 5' – 0"

N

GRAPHIC SCALE

0' 5' 10' 15'

1" = 5'-0"

SPECIFIC NOTES:

A. REFER TO DWG. E-001 FOR GENERAL NOTES AND E-002 FOR SYMBOLS LEGEND.

B. REFER TO DWG. E-003 AND E-004 FOR CABLE SCHEDULES.

C. DISCONNECT, REMOVE AND PROPERLY DISPOSE OF EXISTING UNIT SUBSTATION AND APPURTENANCES; INCLUDING, BUT NOT LIMITED TO, PRIMARY CONDUCTORS, PRIMARY SWITCHGEAR, TRANSFORMER, SECONDARY DISTRIBUTION EQUIPMENT AND SECONDARY CONDUCTORS.

D. EXIST. RGS CONDUIT TO REMAIN. CONDUIT ROUTED EXPOSED ON CONCRETE SLAB VIA SLOTTED STRUT SUPPORTS.

E. DISCONNECT, REMOVE AND PROPERLY DISPOSE OF EXISTING ELECTRICAL RACK AND APPURTENANCES; INCLUDING, BUT NOT LIMITED TO, EXPOSED DISCONNECTS, TRANSFORMERS, CONDUIT AND CONDUCTORS.

F. REMOVE AND PROPERLY DISPOSE OF EXISTING UNDERGROUND CABLES AND CONDUITS BETWEEN SS-E AND TEMPORARY TRAILER POWER DISCONNECT.

G. EXISTING UNDERGROUND CABLE FROM THE EXISTING HANDHOLE SHALL BE RETAINED FOR REUSE. ALLOW ADEQUATE LENGTH OF EXISTING CABLE AT THE HANDHOLE TO SPLICE BOTH NEW TEMPORARY AND PERMANENT CIRCUITS.

H. REMOVE AND PROPERLY DISPOSE OF EXISTING UNDERGROUND CABLES AND CONDUITS BETWEEN SS-E AND HANDHOLE SOUTHWEST OF MHP-65A. LOADS SERVED THROUGH THESE CONDUITS MUST REMAIN ACTIVE THROUGHOUT THE PROJECT, REFER TO DWG. E-413 FOR ADDITIONAL REQUIREMENTS REGARDING TEMPORARY RACEWAY SYSTEM.

J. CUT AND SEAL EXISTING UNDERGROUND CONDUITS/DUCTBANKS WITHIN 12 INCHES OF EDGE OF CONCRETE PAD TO REMAIN.

K. ALL MEDIUM VOLTAGE CABLES AND DUCTS WITHIN MANHOLE MHP-65A ARE TO BE REMOVED. MHP-65A IS TO BE RETAINED AS A CONNECTION POINT FOR FUTURE LOW VOLTAGE COOLING TOWER ELECTRICAL EQUIPMENT.

L. REMOVE AND PROPERLY DISPOSE OF EXISTING UNDERGROUND CONDUITS/DUCTBANKS AND CABLES.

M. REMOVE AND PROPERLY DISPOSE OF EXISTING EXPOSED CABLES AND CONDUITS BETWEEN SS-E AND MHP-73. LOADS SERVED THROUGH THESE CONDUITS MUST REMAIN ACTIVE THROUGHOUT THE PROJECT, REFER TO DWG. E-413 FOR ADDITIONAL REQUIREMENTS REGARDING TEMPORARY RACEWAY SYSTEM.

N. REMOVE AND PROPERLY DISPOSE OF EXISTING UNDERGROUND CABLES AND CONDUITS BETWEEN EDGE OF CONCRETE PAD AND MHP-73. LOADS SERVED THROUGH THESE CONDUITS MUST REMAIN ACTIVE THROUGHOUT THE PROJECT, REFER TO DWG. E-413 FOR ADDITIONAL REQUIREMENTS REGARDING TEMPORARY RACEWAY SYSTEM.

P. DISCONNECT, REMOVE, AND PROPERLY DISPOSE OF EXISTING UNIT SUBSTATION SS-F AND APPURTENANCES INCLUDING, BUT NOT LIMITED TO, PRIMARY CONDUCTORS, PRIMARY SWITCHGEAR, TRANSFORMER, AND SECONDARY SWITCHGEAR. NUMEROUS EXISTING SECONDARY LOAD CONDUCTORS ARE TO BE RETAINED FOR REUSE; REFER TO DWGS. E-413, E-611, E-612, AND E-641 FOR ADDITIONAL REQUIREMENTS.

R. REMOVE AND PROPERLY DISPOSE OF EXISTING UNDERGROUND CONDUITS AND CABLES BETWEEN SUBSTATIONS SS-E AND SS-F.

S. NEW HANDHOLE SHALL BE INSTALLED; REFER TO DWG. E-413 FOR ADDITIONAL REQUIREMENTS. EXISTING UNDERGROUND CABLE FROM THE NEW HANDHOLE SHALL BE RETAINED FOR REUSE. ALLOW ADEQUATE LENGTH OF EXISTING CABLE AT THE HANDHOLE TO SPLICE TO NEW TEMPORARY AND PERMANENT CABLES. REMOVE AND PROPERLY DISPOSE OF EXISTING CONDUIT AND CABLE MOUNTED ON THE CONCRETE SLAB FROM THE NEW HANDHOLE LOCATION TO SUBSTATION SS-D.

T. EXISTING UNDERGROUND CABLE FROM THE MANHOLE MHP-73 TO THE O&C BLDG. (M7-355) IOZ RECEPTACLE LOAD SHALL BE RETAINED FOR REUSE. ALLOW ADEQUATE LENGTH OF EXISTING CABLE IN THE MANHOLE TO SPLICE TO NEW CIRCUIT.

U. ALL EXISTING CONDUITS TO BE ABANDONED THAT STUB UP THROUGH THE CONCRETE SLAB SHALL BE CUT FLUSH WITH GRADE AND FILLED WITH GROUT.

V. DISCONNECT, REMOVE AND PROPERLY DISPOSE OF EXISTING LIGHT POLE AND APPURTENANCES INDICATED. EXISTING UG LIGHTING CIRCUITS FEEDING O&C BLDG. (M7-355) SERVICE ROAD AND PARKING LOTS ARE SUPPLIED FROM SS-F AND ARE TO REMAIN FOR REUSE. REFER TO DWG. E-413 AND PANEL SCHEDULE ON DWG. E-641 FOR ADDITIONAL REQUIREMENTS.

SYM.	ZONE	DESCRIPTION	DATE	APPROVED
		REVISIONS		

URS
7650 West Courtney Campbell Causeway
Suite 700
Tampa, Florida 33607
Ph: (813) 286-1711 Fax: (813) 286-6587
Florida Engineering Number: 0000002

SIGNATURES		DATE
DRAWN	TRS	9/24/12
CHECKED	GSK	9/24/12
SUBMITTED	GLENN H. DAVIS	9/24/12
ST OF LICENSURE: FL LICENSE NO.: 66443		
APPROVED	F. WALKER	9/24/12
	S. MEHTA	9/25/12

NATIONAL AERONAUTICS AND SPACE ADMINISTRATION
JOHN F. KENNEDY SPACE CENTER, NASA
KENNEDY SPACE CENTER, FLORIDA

REVITALIZE MEDIUM VOLTAGE ELECTRICAL DISTRIBUTION SYSTEMS, INDUSTRIAL AND PAYLOAD PROCESSING AREAS

ENLARGED SITE PLAN – SUBSTATIONS SS B THRU F – DEMOLITION

E-412

FILE NO.	SIZE	DWG. NO.
	F	79K39135
PCN NO. 98860		SHEET 54

KSC FORM 1-11A (REV 6/91) (C/G 12/93)

NOTICE – WHEN GOVERNMENT DRAWINGS, SPECIFICATIONS, OR OTHER DATA ARE USED FOR ANY PURPOSE OTHER THAN IN CONNECTION WITH A DEFINITELY RELATED GOVERNMENT PROCUREMENT OPERATION, THE UNITED STATES GOVERNMENT THEREBY INCURS NO RESPONSIBILITY NOR ANY OBLIGATION WHATSOEVER; AND THE FACT THAT THE GOVERNMENT MAY HAVE FORMULATED, FURNISHED, OR IN ANY WAY SUPPLIED THE SAID DRAWINGS, SPECIFICATIONS, OR OTHER DATA IS NOT TO BE REGARDED BY IMPLICATION OR OTHERWISE AS IN ANY MANNER LICENSING THE HOLDER OR ANY OTHER PERSON OR CORPORATION, OR CONVEYING ANY RIGHTS OR PERMISSION TO MANUFACTURE, USE, OR SELL ANY PATENTED INVENTION THAT MAY IN ANY WAY BE RELATED THERETO.

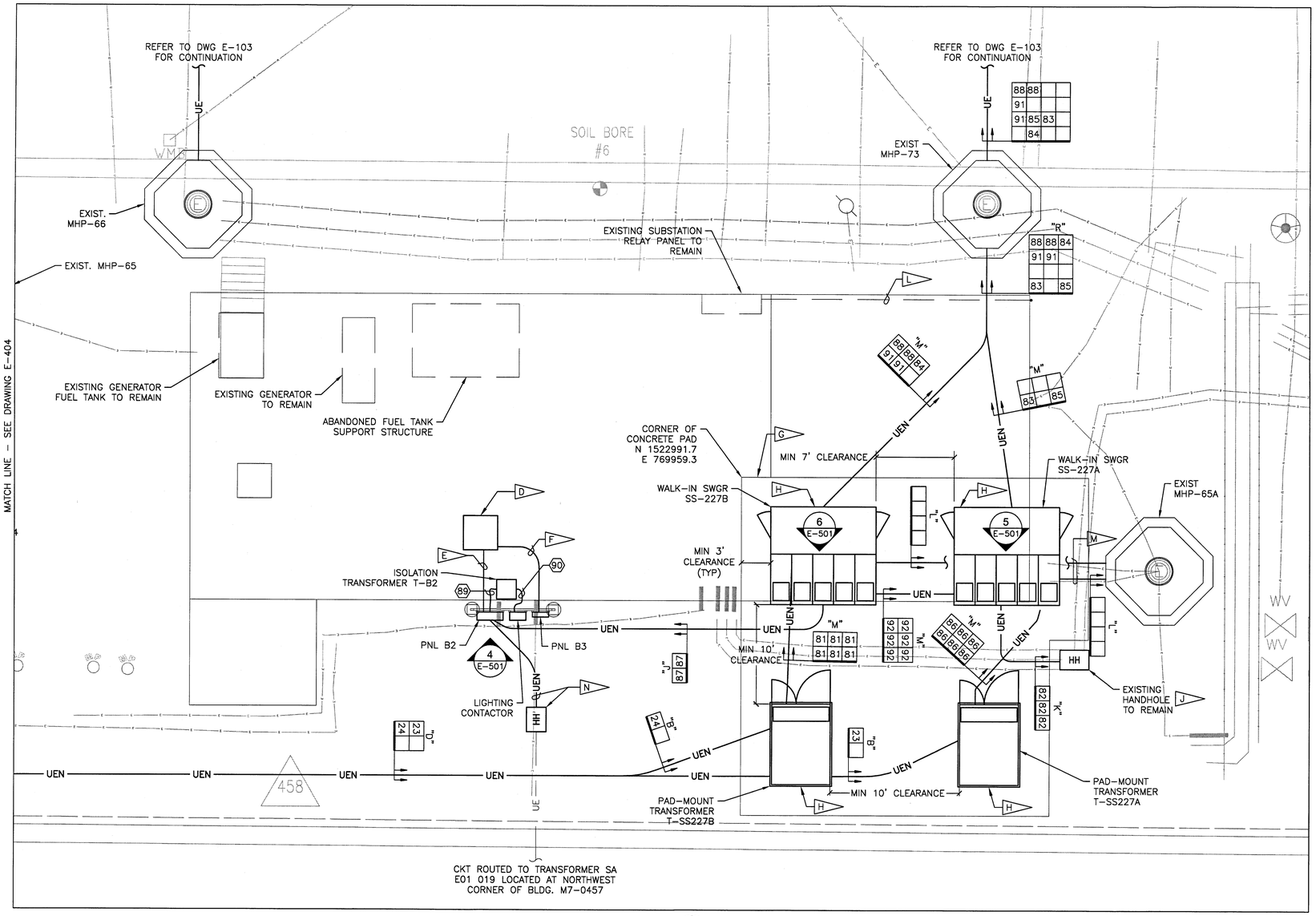

ENLARGED PLAN – MODIFIED (1 / E-103)

SCALE 1" = 5' – 0"

N

GRAPHIC SCALE

0' 5' 10' 15'

1" = 5'-0"

SPECIFIC NOTES:

A. REFER TO DWG. E-001 FOR GENERAL NOTES AND E-002 FOR SYMBOLS LEGEND.

B. REFER TO DWG. E-003 AND E-004 FOR CABLE SCHEDULES. REFER TO DWG. E-641 FOR PANEL SCHEDULES.

C. REFER TO DETAIL 1 ON DWG. E-503 FOR ADDITIONAL REQUIREMENTS REGARDING SUBSTATIONS SS-A AND SS-B EQUIPMENT, RACEWAYS AND GROUNDING.

D. PROVIDE 42" W SQ. BY 30" D. 316SS WEATHERPROOF HINGED COVER PULL BOX. POSITION PULL BOX DIRECTLY OVER TOP OF THE EXISTING CONDUIT STUB UPS, AND ANCHOR TO EXISTING CONCRETE EQUIPMENT PAD AT EACH CORNER USING 3/8" DIA. SS HARDWARE. SHIM PULL BOX ABOVE CONCRETE PAD USING SS WASHERS. SPLICE NEW CIRCUITS TO EXISTING CIRCUITS INSIDE THE SPLICE BOX USING SPLIT BOLT TYPE CONNECTORS AND BUILT-UP VINYL ELECTRICAL TAPE INSULATION. PRESERVE ADEQUATE AMOUNT OF EXISTING FEEDER WIRE TO PERFORM SPLICE AND INCLUDE A SERVICE LOOP. PROVIDE 2-COAT EPOXY PAINT FINISH ON PORTION OF RACEWAY SYSTEM ROUTED EXPOSED ALONG THE CONCRETE EQUIPMENT PAD. PAINT COLOR SHALL BE SAFETY YELLOW PER NASA STANDARD. PROVIDE ELECTRICAL HAZARD SIGN CENTERED ON THE PULL BOX COVER. ELECTRICAL HAZARD SIGN SHALL BE POLYESTER SELF- ADHESIVE MANUFACTURED TYPE WITH "DANGER 480 VOLTS" LEGEND.

E. PROVIDE (1) 2" GRS CONDUIT ROUTED EXPOSED BETWEEN PNL B2 AND PULL BOX. SPLICE EXISTING TRAFFIC LIGHT CIRCUIT AND EXTEND TO PANEL B2.

F. PROVIDE TWO(2) 2" GRS CONDUITS ROUTED EXPOSED BETWEEN PNL B3 AND PULL BOX. SPLICE EXISTING PARKING LOT CIRCUITS AND EXTEND TO PANEL B3.

G. PROVIDE CONCRETE EQUIPMENT PAD THAT EXTENDS A MINIMUM OF 3' BETWEEN EQUIPMENT ENCLOSURES AND EDGE OF PAD. REFER TO STRUCTURAL DRAWINGS FOR ADDITIONAL PAD REQUIREMENTS.

H. REFER TO REFER TO S-102 FOR CONCRETE EQUIPMENT PAD REQUIREMENTS.

J. SPLICE NEW FEEDER "82" TO EXISTING FEEDER INSIDE THE HANDHOLE USING SPLIT BOLT TYPE CONNECTORS AND BUILT-UP VINYL ELECTRICAL TAPE INSULATION. PRESERVE ADEQUATE AMOUNT OF EXISTING FEEDER WIRE TO PERFORM SPLICE.

K. <NOT USED>

L. EXISTING CONTROL CABLING IN GRS CONDUIT ROUTED EXPOSED TO REMAIN.

M. TWO(2) TYPE "L" DUCT BANKS BETWEEN MHP-65A AND SS-227A AND SS-227B ARE RESERVED FOR FUTURE COOLING TOWER ELECTRICAL DISTRIBUTION LOADS.

N. PROVIDE 30"L X 24"W X 18"D MINIMUM HANDHOLE. REFER TO DETAIL 2 ON DWG. E-514. PROVIDE 3" CONDUIT BETWEEN PANEL B2 AND HANDHOLE. SPLICE NEW FEEDER TO EXISTING FEEDER INSIDE THE HANDHOLE USING SPLIT BOLT TYPE CONNECTORS AND BUILT-UP VINYL ELECTRICAL TAPE INSULATION AND EXTEND TO PANEL B2. PROVIDE SCH. 80 PVC CONDUIT WHERE DIRECT BURIED AND GRS CONDUIT WHERE EXPOSED. WHERE CONDUIT IS DIRECT BURIED, PROVIDE A MINIMUM OF 24" EARTH COVER. TRANSITION SCH. 80 PVC CONDUIT TO PVC COATED GRS CONDUIT AT LAST 90 DEG. ELBOW BEFORE RISING UP AND EMERGING FROM GRADE.

SYM.	ZONE	DESCRIPTION	DATE	APPROVED
		REVISIONS		

URS
7650 West Courtney Campbell Causeway
Suite 700
Tampa, Florida 33607
Ph: (813) 286-1711 Fax: (813) 286-6587
Florida Engineering Number: 000002

SIGNATURES		DATE
DRAWN	TRS	9/24/12
CHECKED	GSK	9/24/12
SUBMITTED	GLENN H. DAVIS	9/24/12
ST OF LICENSURE: FL		
LICENSE NO.: 66443		
APPROVED	F. WALKER	9/24/12
	S. MEHTA	9/25/12

NATIONAL AERONAUTICS AND SPACE ADMINISTRATION
JOHN F. KENNEDY SPACE CENTER, NASA
KENNEDY SPACE CENTER, FLORIDA

REVITALIZE MEDIUM VOLTAGE ELECTRICAL DISTRIBUTION SYSTEMS, INDUSTRIAL AND PAYLOAD PROCESSING AREAS
ENLARGED SITE PLAN – SUBSTATION SS 227A & SS 227B – MODIFIED

E-413

FILE NO.	SIZE	DWG. NO.
	F	79K39135
PCN NO. 98860		SHEET 55

I:\NASA KSC\Task No. 1\Drawings\E-413 ENLARGED SIT PLANS - SS-A & B - NEW.dwg 09/20/2012 14:04

KSC FORM 1-11A (REV 6/91) (C/G 12/93)

NOTICE – WHEN GOVERNMENT DRAWINGS, SPECIFICATIONS, OR OTHER DATA ARE USED FOR ANY PURPOSE OTHER THAN IN CONNECTION WITH A DEFINITELY RELATED GOVERNMENT PROCUREMENT OPERATION, THE UNITED STATES GOVERNMENT THEREBY INCURS NO RESPONSIBILITY NOR ANY OBLIGATION WHATSOEVER; AND THE FACT THAT THE GOVERNMENT MAY HAVE FORMULATED, FURNISHED, OR IN ANY WAY SUPPLIED THE SAID DRAWINGS, SPECIFICATIONS, OR OTHER DATA IS NOT TO BE REGARDED BY IMPLICATION OR OTHERWISE AS IN ANY MANNER LICENSING THE HOLDER OR ANY OTHER PERSON OR CORPORATION, OR CONVEYING ANY RIGHTS OR PERMISSION TO MANUFACTURE, USE, OR SELL ANY PATENTED INVENTION THAT MAY IN ANY WAY BE RELATED THERETO.

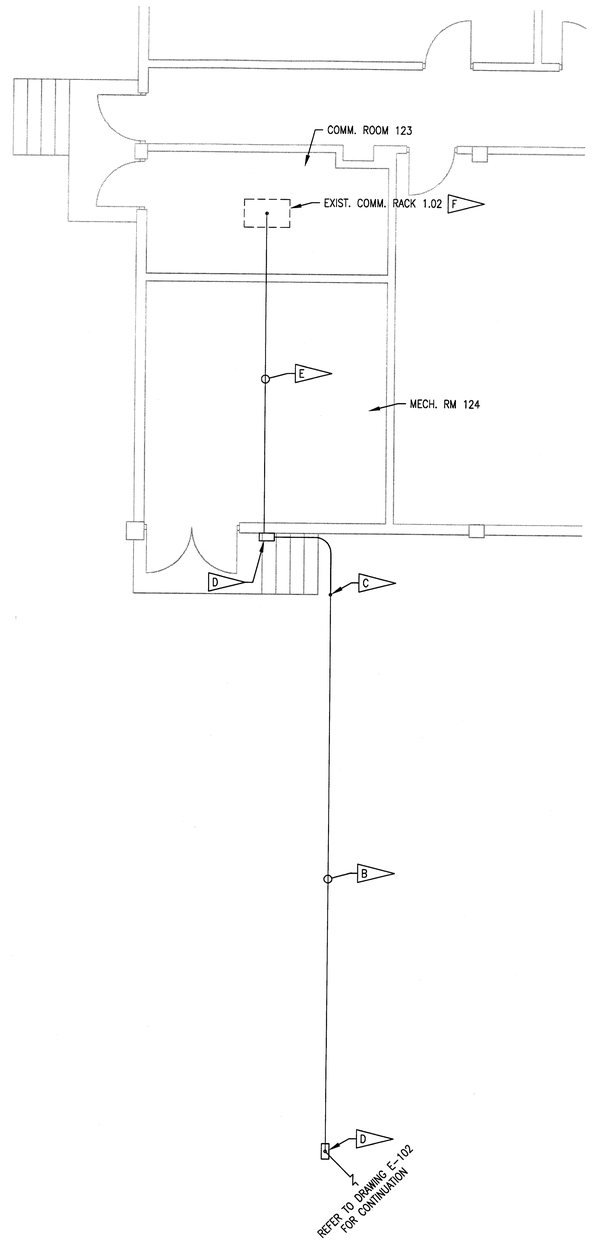

PARTIAL PLAN – AUDITORIUM AND TRAINING BLDG M7-351 – MODIFIED (1 / E-102)

SCALE: 1/4" = 1'-0"

N

GRAPHIC SCALE

0' 1' 2' 3' 4' 8' 12'

1/4" = 1'-0"

SPECIFIC NOTES:

A. REFER TO DETAIL 1 ON DRAWING E-632 FOR METERING SYSTEM ARCHITECTURE DIAGRAM.

B. REFER TO DRAWINGS E-102 AND -632 FOR COMMUNICATIONS CONDUIT AND CONTENTS REQUIREMENTS, RESPECTIVELY. ROUTE COMMUNICATIONS CONDUIT EXPOSED ABOVE GRADE ON EXISTING PIPE RACK. PROVIDE GALVANIZED STEEL SUPPORT STRUTS ON EXISTING PIPE RACK ON WHICH TO MOUNT CONDUIT, AS REQUIRED. FASTEN STRUT TO PIPE RACK USING 1/4" DIA. GALVANIZED STEEL HARDWARE. DO NOT FASTEN STRUT TO MECHANICAL PIPE OR OTHER CONDUITS.

C. TURN CONDUIT UP HERE TO FOLLOW ROUTING OF EXISTING PIPES/CONDUITS OVER TOP OF WALKWAY.

D. PROVIDE NEMA TYPE 4X, 316 STAINLESS STEEL, CONTINUOUS HINGE DOOR ENCLOSURE FABRICATED OF MINIMUM 14 GAUGE SHEET STOCK WITH NOMINAL DIMENSIONS OF 18" W. BY 18" H. BY 4" D. AND PAD LOCK HASP. ENCLOSURE HARDWARE AND HINGES SHALL BE 316 STAINLESS STEEL. MOUNT ENCLOSURE ON SUPPORT STRUT.

E. ROUTE COMMUNICATIONS CONDUIT OVERHEAD THROUGH MECHANICAL ROOM 124 TO EXISTING COMMUNICATIONS RACK INSIDE COMMUNICATIONS ROOM 123.

F. COORDINATE CONDUIT TERMINATION LOCATION IN FIELD WITH NASA COMMUNICATION GROUP. LEAVE 30'-0" OF SLACK IN EACH COMMUNICATIONS CABLE NEATLY BUNDLED, COILED, SECURED AND IDENTIFIED, FOR TERMINATION BY NASA COMMUNICATIONS GROUP.

SYM.	ZONE	DESCRIPTION	DATE	APPROVED
		REVISIONS		

URS
7650 West Courtney Campbell Causeway
Suite 700
Tampa, Florida 33607
Ph: (813) 286-1711 Fax: (813) 286-6587
Florida Engineering Number: 000002

SIGNATURES		DATE
DRAWN	TRS	9/24/12
CHECKED	GHD	9/24/12
SUBMITTED		
GARRET KERLY		
ST OF LICENSURE: FL		
LICENSE NO.: 54952		
APPROVED		
F. WALKER		9/25/12
S. MEHTA		9/25/12

NATIONAL AERONAUTICS AND SPACE ADMINISTRATION
JOHN F. KENNEDY SPACE CENTER, NASA
KENNEDY SPACE CENTER, FLORIDA

REVITALIZE MEDIUM VOLTAGE ELECTRICAL DISTRIBUTION SYSTEMS, INDUSTRIAL AND PAYLOAD PROCESSING AREAS
PARTIAL PLAN – AUDITORIUM AND TRAINING BLDG. (M7-351) – MODIFIED

E-414

FILE NO.	SIZE	DWG. NO.
	F	79K39135
PCN NO. 98860		SHEET 56

TI/MSA KSC\Task 05\Drawings\E-414 ENLARGED PLAN.dwg 09/20/2012 14:06

KSC FORM 1-11A (REV 6/91) (C/G 12/93)

NOTICE – WHEN GOVERNMENT DRAWINGS, SPECIFICATIONS, OR OTHER DATA ARE USED FOR ANY PURPOSE OTHER THAN IN CONNECTION WITH A DEFINITELY RELATED GOVERNMENT PROCUREMENT OPERATION, THE UNITED STATES GOVERNMENT THEREBY INCURS NO RESPONSIBILITY NOR ANY OBLIGATION WHATSOEVER; AND THE FACT THAT THE GOVERNMENT MAY HAVE FORMULATED, FURNISHED, OR IN ANY WAY SUPPLIED THE SAID DRAWINGS, SPECIFICATIONS, OR OTHER DATA IS NOT TO BE REGARDED BY IMPLICATION OR OTHERWISE AS IN ANY MANNER LICENSING THE HOLDER OR ANY OTHER PERSON OR CORPORATION, OR CONVEYING ANY RIGHTS OR PERMISSION TO MANUFACTURE, USE OR SELL ANY PATENTED INVENTION THAT MAY IN ANY WAY BE RELATED THERETO.

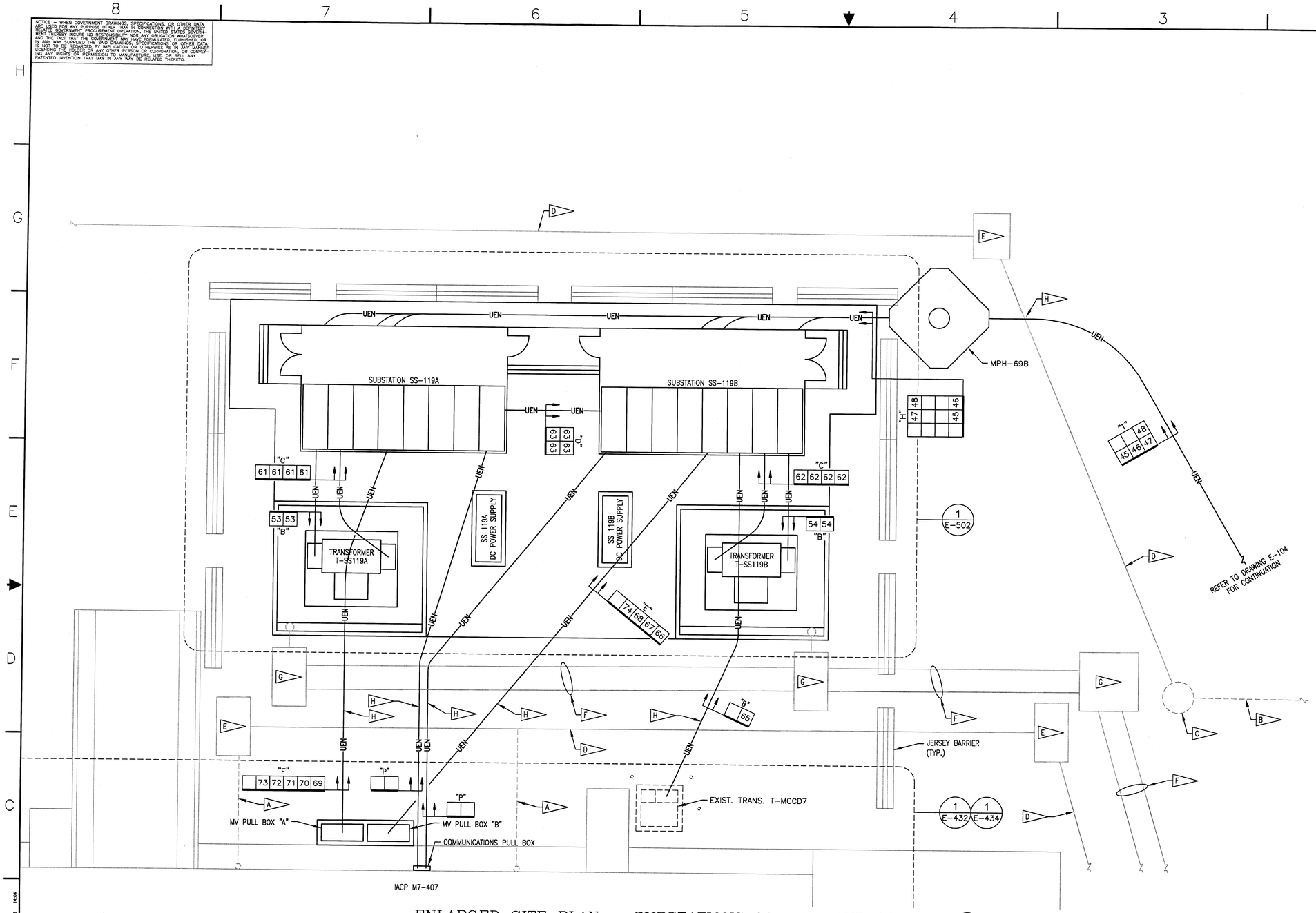

ENLARGED SITE PLAN – SUBSTATIONS SS-119A AND SS-119B (1 / E-104)

SCALE: 1" = 5'-0"

N

GRAPHIC SCALE

0' 5' 10' 15'

1" = 5'-0"

SPECIFIC NOTES:

- A – EXISTING RAIN GUTTER DOWN LEADER PIPE TO REMAIN.
- B – EXISTING STORM PIPE TO REMAIN.
- C – EXISTING STORM STRUCTURE TO REMAIN.
- D – STORM PIPE. REFER TO CIVIL DRAWINGS FOR REQUIREMENTS.
- E – STORM STRUCTURE. REFER TO CIVIL DRAWINGS FOR REQUIREMENTS.
- F – STORM/CONTAINMENT PIPE. REFER TO CIVIL DRAWINGS FOR REQUIREMENTS.
- G – STORM/CONTAINMENT STRUCTURE. REFER TO CIVIL DRAWINGS FOR REQUIREMENTS.
- H – WHERE DUCT BANK CROSSES UNDER STORM PIPE, INSTALL TOP OF DUCT BANK AT EL. 1.88 FT.
- J – WHERE DUCT BANK CROSSES UNDER STORM/CONTAINMENT PIPES, INSTALL TOP OF DUCT BANK AT EL. 1.35 FT.

SYM.	ZONE	DESCRIPTION	DATE	APPROVED
		REVISIONS		

URS
7650 West Courtney Campbell Causeway
Suite 700
Tampa, Florida 33607
Ph: (813) 286-1711 Fax: (813) 286-6587
Florida Engineering Number: 00002

SIGNATURES		DATE
DRAWN	TRS	9/24/12
CHECKED	GHD	9/24/12
SUBMITTED	GARRET KERLY	9/24/12
ST OF LICENSURE: FL		
LICENSE NO.: 54952		
APPROVED	F. WALKER	9/24/12
	S. MEHTA	9/25/12

NATIONAL AERONAUTICS AND SPACE ADMINISTRATION
JOHN F. KENNEDY SPACE CENTER, NASA
KENNEDY SPACE CENTER, FLORIDA

REVITALIZE MEDIUM VOLTAGE ELECTRICAL DISTRIBUTION SYSTEMS, INDUSTRIAL AND PAYLOAD PROCESSING AREAS

ENLARGED SITE PLAN – SS 119A AND SS 119B

FILE NO.	SIZE	DWG. NO.
	F	79K39135
PCN NO. 98860		SHEET 57

E-415

KSC FORM 1-11A (REV 8/91) (C/G 12/93)

71/NASA KSC\Live No. \Drawings\E-415 ENLARGED SITE PLAN - SS 119A AND SS 119B.dwg 09/20/2012 14:04

NOTICE – WHEN GOVERNMENT DRAWINGS, SPECIFICATIONS, OR OTHER DATA ARE USED FOR ANY PURPOSE OTHER THAN IN CONNECTION WITH A DEFINITELY RELATED GOVERNMENT PROCUREMENT OPERATION, THE UNITED STATES GOVERNMENT THEREBY INCURS NO RESPONSIBILITY NOR ANY OBLIGATION WHATSOEVER; AND THE FACT THAT THE GOVERNMENT MAY HAVE FORMULATED, FURNISHED, OR IN ANY WAY SUPPLIED THE SAID DRAWINGS, SPECIFICATIONS OR OTHER DATA IS NOT TO BE REGARDED BY IMPLICATION OR OTHERWISE AS IN ANY MANNER LICENSING THE HOLDER OR ANY OTHER PERSON OR CORPORATION, OR CONVEYING ANY RIGHTS OR PERMISSION TO MANUFACTURE, USE OR SELL ANY PATENTED INVENTION THAT MAY IN ANY WAY BE RELATED THERETO.

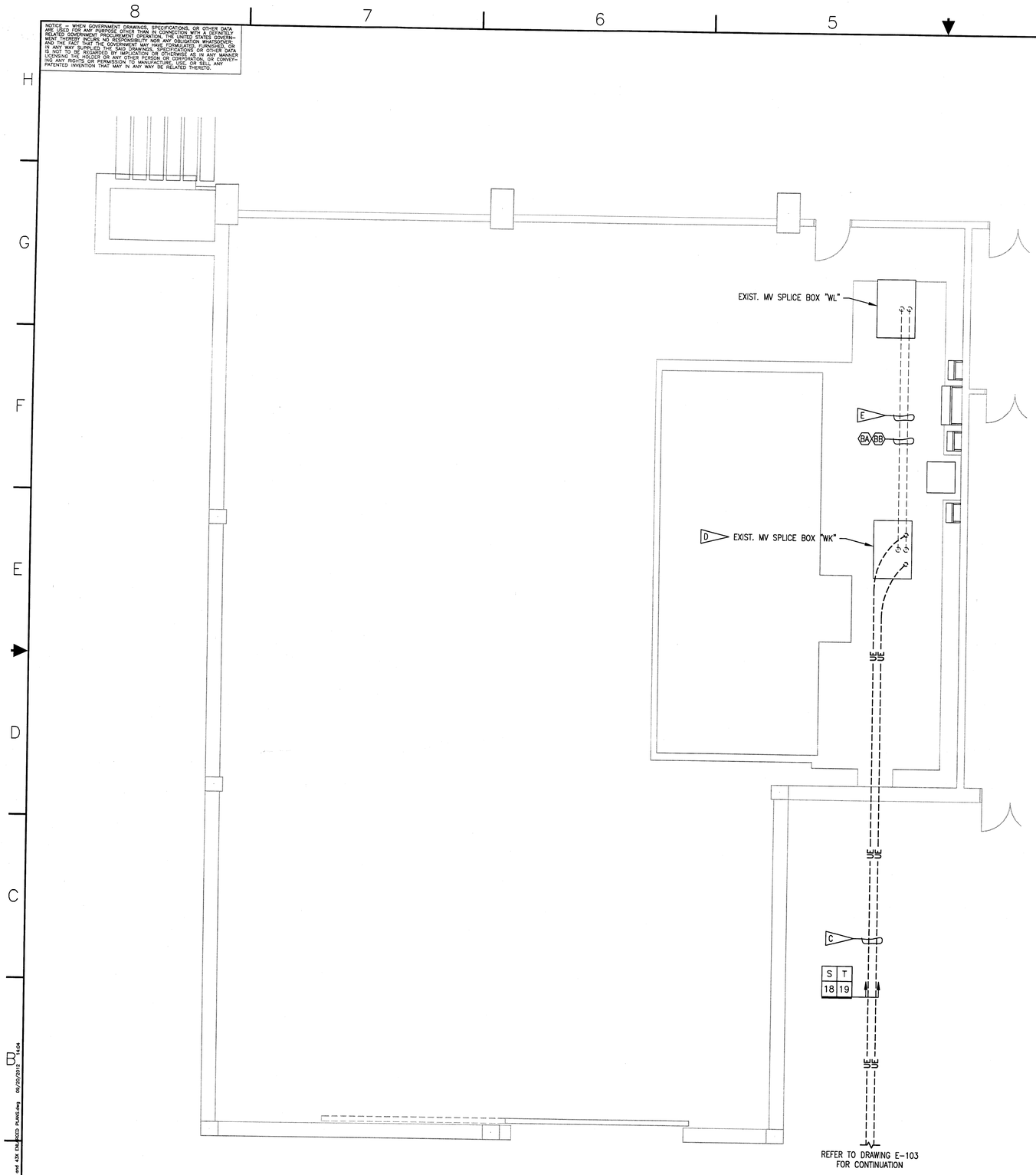

PARTIAL PLAN – O&C BUILDING M7-355 WEST EQUIPMENT ROOM – MODIFIED (1 / E-103)

SCALE: 1/4" = 1'-0"

SPECIFIC NOTES:

A. REFER TO DRAWING E-003 FOR EXISTING CABLE SCHEDULE.

B. REFER TO DRAWING E-004 FOR MODIFIED CABLE SCHEDULE.

C. EXISTING CONDUITS ROUTED UNDERGROUND BETWEEN EXISTING MANHOLE MHP-83 AND EXISTING MV PULL BOX TO REMAIN INTACT. REUSE THESE CONDUITS TO INSTALL NEW MV FEEDERS.

D. SPLICE NEW FEEDERS "18" AND "19" MV EPR CABLES TO EXISTING FEEDERS "BB" AND "BA" MV EPR CABLES, RESPECTIVELY, INSIDE EXISTING MV PULL BOX. PROVIDE TWO VERTICAL CABLE CLEATS INSIDE EXISTING MV PULL BOX; ONE EACH TO SUPPORT EACH OF THE TWO NEW MV FEEDERS SPECIFIED TO BE INSTALLED THERETHROUGH. EACH CABLE CLEAT SHALL BE FABRICATED FROM 316 STAINLESS STEEL, SHALL HAVE A LOW SMOKE AND FUME ZERO HALOGEN POLYMER LINER, SHALL PROVIDE A TRIPLEX CABLE ARRANGEMENT, AND SHALL BE SIZED BASED UPON THE EXACT DIAMETER OF THE MV CABLE ON WHICH IT IS TO BE APPLIED. PROVIDE 1 5/8" SQ. BY LENGTH AS REQUIRED, GALVANIZED STEEL STRUT ON WHICH TO MOUNT CABLE CLEATS. MOUNT STRUT TO EXISTING MV PULL BOX INTERNAL STRUCTURE SO AS NOT TO INTERFERE WITH THE OPERATION OF ANY DOORS OR INSTALLATION OF ANY REMOVABLE ACCESS PANELS. MOUNT STRUT USING 3/8" DIA. GALVANIZED STEEL HARDWARE.

E. EXISTING CONDUITS CONTAINING EXISTING MV CABLES "BA" AND "BB" IS ROUTED OVERHEAD BETWEEN EXISTING MV SPLICE BOXES, AND IS TO REMAIN INTACT.

N

GRAPHIC SCALE

0' 1' 2' 3' 4' 8' 12'

1/4" = 1'-0"

E-421

SYM.	ZONE	DESCRIPTION	DATE	APPROVED
		REVISIONS		

URS

7650 West Courtney Campbell Causeway
Suite 700
Tampa, Florida 33607
Ph: (813) 286-1711 Fax: (813) 286-6587
Florida Engineering Number: 000002

SIGNATURES		DATE
DRAWN	TRS	9/24/12
CHECKED	GHD	9/24/12
SUBMITTED	GARRETT KERN	9/24/12
ST OF LICENSURE: FL		
LICENSE NO.: 54952		
APPROVED	F. WALKER	9/25/12
	S. MEHTA	9/25/12

NATIONAL AERONAUTICS AND SPACE ADMINISTRATION
JOHN F. KENNEDY SPACE CENTER, NASA
KENNEDY SPACE CENTER, FLORIDA

REVITALIZE MEDIUM VOLTAGE
ELECTRICAL DISTRIBUTION SYSTEMS,
INDUSTRIAL AND PAYLOAD PROCESSING AREAS
PARTIAL PLAN – O&C BLDG.
(M7-355) WEST EQUIPMENT ROOM
– MODIFIED

FILE NO.	SIZE	DWG. NO.
	F	79K39135
PCN NO. 98860		SHEET 58

KSC FORM 1-11A (REV 8/91) (C/G 12/93)

T:\NASA KSC\Jobs_KC\Drawings\E-420 and 430 ENGINEERED PLANS.dwg 08/20/2013 8:44

NOTICE – WHEN GOVERNMENT DRAWINGS, SPECIFICATIONS, OR OTHER DATA ARE USED FOR ANY PURPOSE OTHER THAN IN CONNECTION WITH A DEFINITELY RELATED GOVERNMENT PROCUREMENT OPERATION, THE UNITED STATES GOVERNMENT THEREBY INCURS NO RESPONSIBILITY NOR ANY OBLIGATION WHATSOEVER; AND THE FACT THAT THE GOVERNMENT MAY HAVE FORMULATED, FURNISHED, OR IN ANY WAY SUPPLIED THE SAID DRAWINGS, SPECIFICATIONS, OR OTHER DATA IS NOT TO BE REGARDED, BY IMPLICATION OR OTHERWISE AS IN ANY MANNER LICENSING THE HOLDER OR ANY OTHER PERSON OR CORPORATION, OR CONVEYING ANY RIGHTS OR PERMISSION TO MANUFACTURE, USE, OR SELL ANY PATENTED INVENTION THAT MAY IN ANY WAY BE RELATED THERETO.

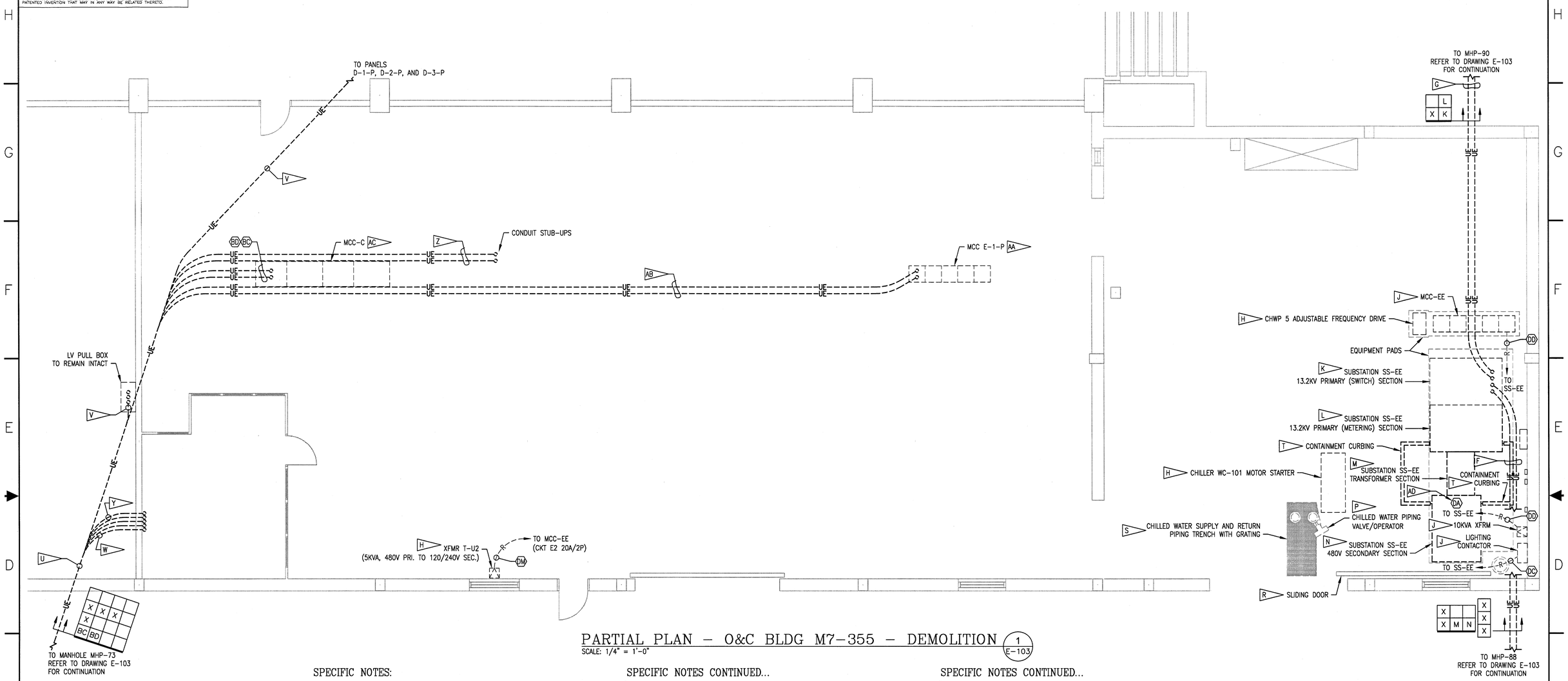

PARTIAL PLAN – O&C BLDG M7-355 – DEMOLITION (1 / E-103)

SCALE: 1/4" = 1'-0"

SPECIFIC NOTES:

A. REFER TO DRAWING E-003 FOR EXISTING CABLE SCHEDULE.

B. COMPLETE THE DEMOLITION WORK ASSOCIATED WITH SUBSTATION SS-EE AFTER NEW SWITCHBOARD B1 IS INSTALLED, TESTED, CHECKED OUT, ENERGIZED, AND PLACED INTO SERVICE, AND ALL 480V LOADS CURRENTLY FED VIA SUBSTATION SS-EE ARE RE-FED VIA NEW SWITCHBOARD B1.

C. FOLLOW THE REQUIREMENTS SPECIFIED FOR TESTING, HANDLING, AND DISPOSAL OF ASBESTOS CONTAINING MATERIALS.

D. FOLLOW THE REQUIREMENTS SPECIFIED FOR TESTING, HANDLING, AND DISPOSAL OF TRANSFORMER INSULATING OIL.

E. FOLLOW THE REQUIREMENTS SPECIFIED FOR TESTING, HANDLING, AND DISPOSAL OF PAINTED EQUIPMENT.

F. MULTI-WAY 4" DUCT BANK ROUTED UNDERGROUND BETWEEN MANHOLE MHP-88 AND SUBSTATION SS-EE 13.2KV PRIMARY (SWITCH) SECTION TO REMAIN INTACT. REUSE THESE TWO CONDUITS TO INSTALL NEW MV FEEDERS.

G. MULTI-WAY 4" DUCT BANK ROUTED UNDERGROUND BETWEEN SUBSTATION SS-EE 13.2KV PRIMARY (SWITCH) SECTION AND MANHOLE MHP-90 TO REMAIN INTACT. REUSE THESE TWO CONDUITS TO INSTALL NEW MV FEEDERS.

H. EQUIPMENT TO REMAIN INTACT.

J. EQUIPMENT TO REMAIN INTACT AND BE REFED VIA NEW SWITCHBOARD B1. DEMOLISH FEEDER CONDUIT AND WIRES SERVING THIS EQUIPMENT BACK TO SUBSTATION SS-EE 480V SECONDARY SECTION. REFER TO DRAWING E-423 FOR NEW WORK.

K. DEMOLISH SUBSTATION SS-EE 13.2KV PRIMARY SWITCH SECTION INTERNALS, LEAVING THE ENCLOSURE AND ASSOCIATED STRUCTURE INTACT FOR REUSE AS MV PULL BOX. UNBOLT SUBSTATION SS-EE 13.2KV PRIMARY SWITCH SECTION FROM ADJOINING METERING SECTION AT SHIPPING SPLIT.

L. DEMOLISH SUBSTATION SS-EE 13.2KV PRIMARY METERING SECTION IN ITS ENTIRETY.

M. DEMOLISH SUBSTATION SS-EE TRANSFORMER SECTION IN ITS ENTIRETY.

SPECIFIC NOTES CONTINUED...

N. DEMOLISH SUBSTATION SS-EE 480V SECONDARY SECTION IN ITS ENTIRETY.

P. TEMPORARILY DISCONNECT AND REMOVE, OR OTHERWISE REPOSITION, CHILLED WATER PIPING VALVE HANDLE AND ASSOCIATED OPERATOR AS REQUIRED TO ENABLE REMOVAL OF DEMOLISHED MATERIALS FROM THE BUILDING.

R. TEMPORARILY REMOVE SLIDING DOOR AS REQUIRED TO ENABLE REMOVAL OF DEMOLISHED MATERIALS FROM THE BUILDING. REINSTALL SLIDING DOOR IMMEDIATELY FOLLOWING REMOVAL OF DEMOLISHED MATERIALS FROM THE BUILDING. PERFORM THIS WORK DURING A SINGLE WORK DAY. SCHEDULE THIS WORK FOR A DAY WHEN NO INCLEMENT WEATHER IS FORECAST. LUBRICATE SLIDING DOOR IN ACCORDANCE WITH THE DOOR MANUFACTURER'S PUBLISHED INSTRUCTIONS. ADJUST SLIDING DOOR IN ACCORDANCE WITH THE DOOR MANUFACTURER'S PUBLISHED INSTRUCTIONS FOR SMOOTH AND EASY OPERATION BY A SINGLE LABORER WITHOUT MECHANICAL ASSISTANCE.

S. PROVIDE TEMPORARY STEEL PLATING OF SUITABLE STRENGTH, ACROSS GRATING TO PREVENT DAMAGE TO GRATING DUE TO MOVEMENT OF MATERIALS INTO AND OUT OF THE BUILDING. REMOVE GRATING WHENEVER MATERIAL MOVING ACTIVITIES ARE NOT BEING PERFORMED.

T. DEMOLISH CONTAINMENT CURBING IN ITS ENTIRETY. LEAVE EQUIPMENT PAD INTACT.

U. EXISTING MULTI-WAY 4" DUCT BANK ROUTED UNDERGROUND BETWEEN MANHOLE MHP-73 AND O&C BUILDING M7-355, TO REMAIN INTACT. EMPTY/SPARE CONDUITS TO BE REUSED AS INDICATED.

V. EXISTING CONDUITS/CONTENTS TO REMAIN INTACT.

W. EXISTING CONDUIT TO REMAIN INTACT FOR REUSE, TO ROUTE NEW FEEDER TO EXISTING FIRE PUMP AUTOMATIC TRANSFER SWITCH (FP ATS). REFER TO DRAWINGS E-423 THROUGH -425 FOR NEW WORK.

Y. EXISTING CONDUIT TO REMAIN INTACT FOR REUSE, TO ROUTE COMMUNICATIONS CABLES TO NEW SUBSTATIONS SS-227A AND -227B. REFER TO DRAWINGS E-423 AND -424 FOR NEW WORK.

SPECIFIC NOTES CONTINUED...

Z. EXISTING CONDUITS TO REMAIN INTACT FOR REUSE, TO FEED NEW SWITCHBOARD B1. REFER TO DRAWING E-423 FOR NEW WORK.

AA. MCC E-1-P TO REMAIN INTACT AND ENERGIZE. THIS MCC WAS RECENTLY INSTALLED UNDER THE OPERATIONS AND CHECKOUT FACILITY (M7-0355) PHASE V PROJECT.

AB. FEEDER BETWEEN MCC E-1-P AND MANHOLE MHP-73 TO REMAIN INTACT FOR REUSE. PRESERVE SUFFICIENT QUANTITY OF FEEDER WIRE INSIDE MANHOLE MHP-73 FOR SPLICING TO NEW FEEDER.

AC. MCC-C IS NOT IN USE AND IS TO REMAIN ABANDONED IN PLACE. DEMOLISH EXISTING MV CABLES SERVING MCC-C, BETWEEN MCC-C AND SUBSTATION SS-C.

AD. CONDENSER WATER PUMP CWP-5 FEEDER CONDUIT AND WIRES STUB UP BELOW SUBSTATION SS-EE 480V SECONDARY SECTION. PRESERVE THESE WIRES FOR REWORK.

N

GRAPHIC SCALE

0' 1' 2' 3' 4' 8' 12'

1/4" = 1'-0"

E-422

SYM.	ZONE	DESCRIPTION	DATE	APPROVED
		REVISIONS		

URS
7650 West Courtney Campbell Causeway
Suite 700
Tampa, Florida 33607
Ph: (813) 286-1711 Fax: (813) 286-6587
Florida Engineering Number: 0000002

SIGNATURES		DATE
DRAWN	TRS	9/24/12
CHECKED	GHD	9/24/12
SUBMITTED	GARRET KERLY	9/24/12
ST OF LICENSURE: FL		
LICENSE NO.: 54952		
APPROVED	F. WALKER	9/24/12
	S. MEHTA	9/25/12

NATIONAL AERONAUTICS AND SPACE ADMINISTRATION
JOHN F. KENNEDY SPACE CENTER, NASA
KENNEDY SPACE CENTER, FLORIDA

REVITALIZE MEDIUM VOLTAGE
ELECTRICAL DISTRIBUTION SYSTEMS,
INDUSTRIAL AND PAYLOAD PROCESSING AREAS
PARTIAL PLAN – O&C BLDG.
(M7-355) MECH. RM. 1410 –
DEMOLITION

FILE NO.	SIZE	DWG. NO.
	F	79K39135
PCN NO. 98860		SHEET 59

KSC FORM 1-11A (REV 6/91) (C/G 2/93)

NOTICE — WHEN GOVERNMENT DRAWINGS, SPECIFICATIONS, OR OTHER DATA ARE USED FOR ANY PURPOSE OTHER THAN IN CONNECTION WITH A DEFINITELY RELATED GOVERNMENT PROCUREMENT OPERATION, THE UNITED STATES GOVERNMENT THEREBY INCURS NO RESPONSIBILITY NOR ANY OBLIGATION WHATSOEVER; AND THE FACT THAT THE GOVERNMENT MAY HAVE FORMULATED, FURNISHED, OR IN ANY WAY SUPPLIED THE SAID DRAWINGS, SPECIFICATIONS OR OTHER DATA, IS NOT TO BE REGARDED BY IMPLICATION OR OTHERWISE AS IN ANY MANNER LICENSING THE HOLDER OR ANY OTHER PERSON OR CORPORATION, OR CONVEYING ANY RIGHTS OR PERMISSION TO MANUFACTURE, USE, OR SELL ANY PATENTED INVENTION THAT MAY IN ANY WAY BE RELATED THERETO.

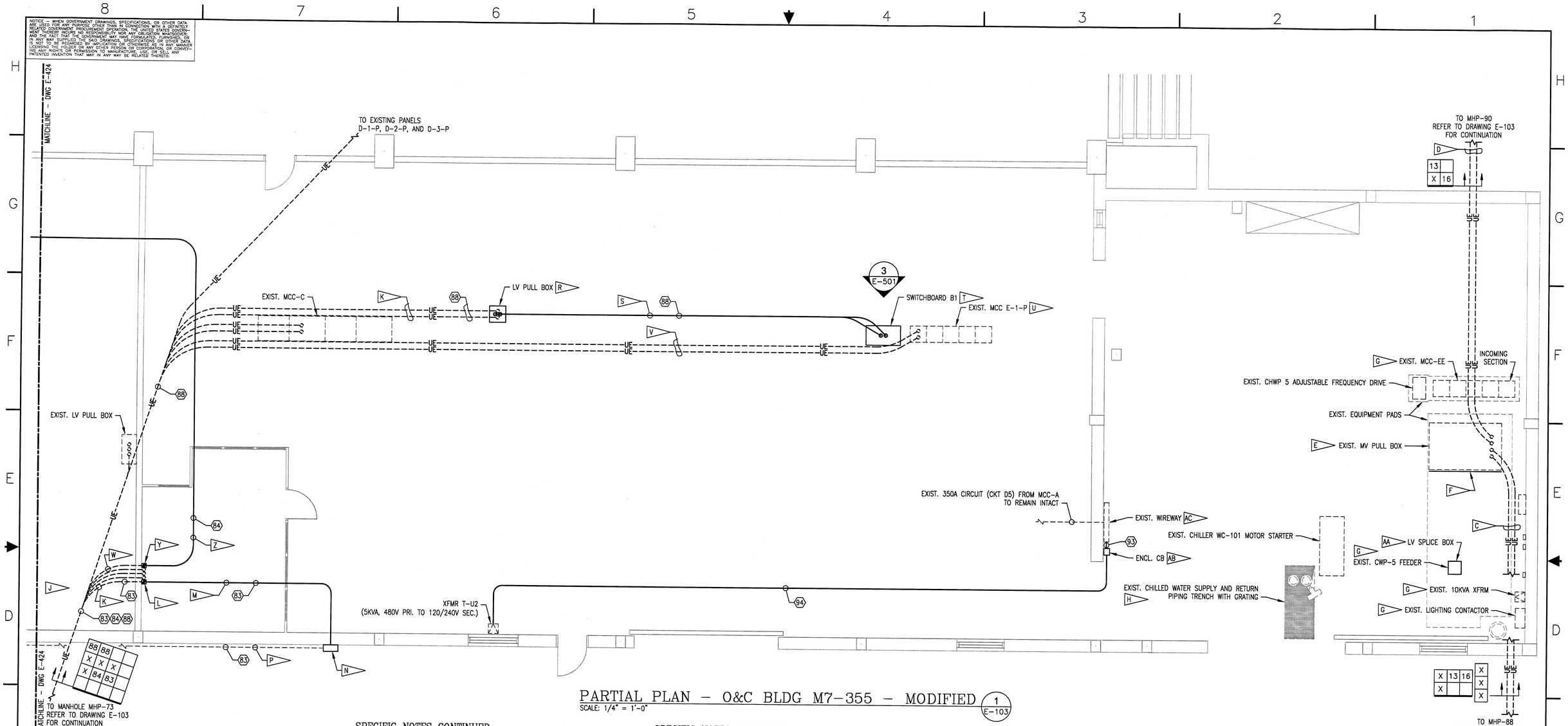

PARTIAL PLAN – O&C BLDG M7-355 – MODIFIED (1 / E-103)

SCALE: 1/4" = 1'-0"

SPECIFIC NOTES:

A. REFER TO DRAWING E-004 FOR MODIFIED CABLE SCHEDULE.

B. COMPLETE THE DEMOLITION WORK ASSOCIATED WITH SUBSTATION SS-EE AFTER NEW SWITCHBOARD B1 IS INSTALLED, TESTED, CHECKED OUT, ENERGIZED, AND PLACED INTO SERVICE, AND ALL 480V LOADS CURRENTLY FED VIA SUBSTATION SS-EE ARE RE-FED VIA NEW SWITCHBOARD B1.

C. EXISTING MULTI-WAY 4" DUCT BANK ROUTED UNDERGROUND BETWEEN EXISTING MANHOLE MHP-88 AND EXISTING MV PULL BOX. REUSE THESE DUCTS TO INSTALL NEW MV FEEDERS.

D. EXISTING MULTI-WAY 4" DUCT BANK ROUTED UNDERGROUND BETWEEN EXISTING MV PULL BOX AND EXISTING MANHOLE MHP-90. REUSE THESE DUCTS TO INSTALL NEW MV FEEDERS.

E. PROVIDE TWO HORIZONTAL CABLE CLEATS INSIDE EXISTING MV PULL BOX; ONE EACH TO SUPPORT EACH OF THE TWO NEW MV FEEDERS SPECIFIED TO BE INSTALLED THERETHROUGH. EACH CABLE CLEAT SHALL BE FABRICATED FROM 316 STAINLESS STEEL, SHALL HAVE A LOW SMOKE AND FUME ZERO HALOGEN POLYMER LINER, SHALL PROVIDE A TRIPLEX CABLE ARRANGEMENT, AND SHALL BE SIZED BASED UPON THE EXACT DIAMETER OF THE MV CABLE ON WHICH IT IS TO BE APPLIED. PROVIDE 1 5/8" SQ. BY LENGTH AS REQUIRED, GALVANIZED STEEL STRUT ON WHICH TO MOUNT CABLE CLEATS. MOUNT STRUT TO EXISTING MV PULL BOX INTERNAL STRUCTURE SO AS NOT TO INTERFERE WITH THE OPERATION OF ANY DOORS OR INSTALLATION OF ANY REMOVABLE ACCESS PANELS. MOUNT STRUT USING 3/8" DIA. GALVANIZED STEEL HARDWARE. PROVIDE ELECTRICAL HAZARD SIGN CENTERED ON EXISTING MV PULL BOX. ELECTRICAL HAZARD SIGN SHALL BE POLYESTER SELF-ADHESIVE MANUFACTURED TYPE WITH NOMINAL DIMENSIONS OF 10" H. BY 14" W. AND "DANGER HIGH VOLTAGE 13200 VOLTS" LEGEND. APPLY ELECTRICAL HAZARD SIGN AFTER ALL PAINTING WORK IS COMPLETE. PROTECT EXISTING AND NEW MV CABLES FROM DAMAGE DURING THE COURSE OF THIS WORK.

SPECIFIC NOTES CONTINUED...

F. PROVIDE CUSTOM FABRICATED CLOSURE PLATE ON SIDE OF EXISTING MV PULL BOX. GRIND EDGES OF CLOSURE PLATE SMOOTH SUCH THAT THERE ARE NO SHARP OR ROUGH SURFACES WHEN FINISHED. CLOSURE PLATE HEIGHT AND DEPTH SHALL EXACTLY MATCH THAT OF THE EXISTING MV PULL BOX. CLOSURE SHALL BE FABRICATED OF MINIMUM 12 GAUGE SHEET GALVANIZED STEEL STOCK. REPAIR ZINC FINISH DAMAGED DURING THE COURSE OF THIS WORK USING FIELD APPLIED COLD GALVANIZING PAINT.

G. RE-FEED EXISTING EQUIPMENT LOAD FROM NEW SWITCHBOARD B1. REFER TO DRAWING E-641 FOR SWITCHBOARD SCHEDULE.

H. PROVIDE TEMPORARY STEEL PLATING OF SUITABLE STRENGTH, ACROSS GRATING TO PREVENT DAMAGE TO GRATING DUE TO MOVEMENT OF MATERIALS INTO AND OUT OF THE BUILDING. REMOVE GRATING WHENEVER MATERIAL MOVING ACTIVITIES ARE NOT BEING PERFORMED.

J. EXISTING MULTI-WAY 4" DUCT BANK ROUTED UNDERGROUND BETWEEN MANHOLE MHP-73 AND O&C BUILDING M7-355. SPECIFIC EMPTY/SPARE CONDUITS TO BE REUSED AS INDICATED.

K. EXISTING 4" CONDUIT(S) TO BE REUSED TO ROUTE NEW FEEDER.

L. PROVIDE PAINTED STEEL "PENCIL BOX" STYLE STRAIGHT-THROUGH IN-LINE PULL BOX WITH 2" STEEL HUBS ON EACH END, NOMINAL DIMENSIONS OF 5.125" W. BY 18" H. BY 5.25" D., AND STEEL REDUCING BUSHINGS AS REQUIRED.

M. PROVIDE 1 1/4" GRS CONDUIT ROUTED EXPOSED OVERHEAD, IN WHICH TO ROUTE NEW FEEDER.

N. PROVIDE 18" SQ. BY 8" DEEP, NEMA 4X 316 STAINLESS STEEL HINGED COVER PULL BOX. MOUNT PULL BOX ON EXTERIOR OF BUILDING. INTERCEPT EXISTING EMPTY/SPARE 1.25" GRS CONDUIT, RECENTLY INSTALLED UNDER THE OPERATIONS AND CHECKOUT FACILITY (M7-0355) PHASE V PROJECT, AND TERMINATE IT INTO THE SIDE OF THIS PULL BOX.

P. EXISTING EMPTY/SPARE 1.25" GRS CONDUIT RECENTLY INSTALLED UNDER THE OPERATIONS AND CHECKOUT FACILITY (M7-0355) PHASE V PROJECT. REWORK AND USE THIS CONDUIT TO ROUTE NEW FEEDER.

SPECIFIC NOTES CONTINUED...

R. PROVIDE CUSTOM FABRICATED NEMA TYPE 1, FREE-STANDING, OPEN-BOTTOM, GALVANIZED STEEL, SCREW COVER PULL BOX FABRICATED OF MINIMUM 12 GAUGE SHEET STOCK WITH NOMINAL DIMENSIONS OF 20" SQ. BY 48" H. PULL BOX SHALL BE HOT DIPPED GALVANIZED AFTER FABRICATION. ANCHOR PULL BOX TO CONCRETE FLOOR SLAB AT EACH CORNER USING 3/8" DIA. GALVANIZED STEEL HARDWARE. SHIM PULL BOX 3/8" MIN. ABOVE CONCRETE FLOOR SLAB USING GALVANIZED STEEL WASHERS. PROVIDE ELECTRICAL HAZARD SIGN CENTERED ON MV PULL BOX COVER. ELECTRICAL HAZARD SIGN SHALL BE POLYESTER SELF-ADHESIVE MANUFACTURED TYPE WITH "DANGER 480 VOLTS" LEGEND.

S. PROVIDE TWO 4" GRS CONDUIT ROUTED EXPOSED OVERHEAD, IN WHICH TO ROUTE NEW FEEDER.

T. PROVIDE FREE-STANDING SWITCHBOARD B1. ANCHOR SWITCHBOARD TO CONCRETE FLOOR SLAB AT EACH CORNER USING 3/8" DIA. GALVANIZED STEEL HARDWARE. SHIM SWITCHBOARD 3/8" MIN. ABOVE CONCRETE FLOOR SLAB USING GALVANIZED STEEL WASHERS. EXISTING EQUIPMENT LOADS TO BE REFED VIA THIS SWITCHBOARD ARE TAGGED WITH SPECIFIC NOTE FLAG "G". REFER TO DRAWING E-641 FOR SWITCHBOARD SCHEDULE.

U. EXISTING MCC E-1-P WAS RECENTLY INSTALLED UNDER THE OPERATIONS AND CHECKOUT FACILITY (M7-0355) PHASE V PROJECT.

V. EXISTING FEEDER BETWEEN EXISTING MCC E-1-P AND EXISTING MANHOLE MHP-73. PRESERVE SUFFICIENT QUANTITY OF EXISTING FEEDER WIRE INSIDE EXISTING MANHOLE MHP-73 FOR SPLICING TO NEW FEEDER FROM SUBSTATION SS-227B.

W. EXISTING 4" CONDUIT TO BE REUSED TO ROUTE NEW COMMUNICATIONS CABLE BETWEEN O&C BUILDING M7-355 ROOM NO. 1435 AND SUBSTATIONS SS-227A AND -227B.

Y. PROVIDE PAINTED STEEL "PENCIL BOX" STYLE STRAIGHT-THROUGH IN-LINE PULL BOX WITH 2" STEEL HUBS ON EACH END, NOMINAL DIMENSIONS OF 5.125" W. BY 18" H. BY 5.25" D., AND STEEL REDUCING BUSHINGS AS REQUIRED.

Z. PROVIDE 2" GRS CONDUIT ROUTED EXPOSED OVERHEAD, IN WHICH TO ROUTE NEW COMMUNICATIONS CABLE BETWEEN O&C BUILDING M7-355 ROOM NO. 1435 AND SUBSTATIONS SS-227A AND -227B.

SPECIFIC NOTES CONTINUED...

AA. PROVIDE 16" W. SQ. BY 8" D. NEMA 12 GALVANIZED STEEL SCREW COVER SPLICE BOX. POSITION PULL BOX DIRECTLY OVER TOP OF THE EXISTING CWP-5 FEEDER CONDUIT STUB UP, AND ANCHOR TO RAISED CONCRETE EQUIPMENT PAD AT EACH CORNER USING 3/8" DIA. GALVANIZED STEEL HARDWARE. SHIM PULL BOX 3/8" MIN. ABOVE CONCRETE FLOOR SLAB USING GALVANIZED STEEL WASHERS. ROUTE NEW FEEDER FROM SWITCHBOARD B1 DOWN WALL AND ACROSS THE TOP OF THE EXISTING RAISED CONCRETE EQUIPMENT PAD, TO THE SPLICE BOX, MINIMIZING THE AMOUNT OF CONDUIT EXPOSED AT THE FLOOR LEVEL. SPLICE NEW FEEDER TO EXISTING FEEDER INSIDE THE SPLICE BOX USING SPLIT BOLT TYPE CONNECTORS AND BUILT-UP VINYL ELECTRICAL TAPE INSULATION. PRESERVE ADEQUATE AMOUNT OF EXISTING FEEDER WIRE TO PERFORM SPLICE AND INCLUDE A SERVICE LOOP. PROVIDE 2-COAT EPOXY PAINT FINISH ON SPLICE BOX AND PORTION OF RACEWAY SYSTEM ROUTED EXPOSED ALONG THE TOP OF THE RAISED CONCRETE EQUIPMENT PAD. PAINT COLOR SHALL BE SAFETY YELLOW PER NASA STANDARD. PROVIDE ELECTRICAL HAZARD SIGN CENTERED ON MV PULL BOX COVER. ELECTRICAL HAZARD SIGN SHALL BE POLYESTER SELF- ADHESIVE MANUFACTURED TYPE WITH "DANGER 480 VOLTS" LEGEND. APPLY ELECTRICAL HAZARD SIGN AFTER ALL PAINTING WORK IS COMPLETE.

SPECIFIC NOTES CONTINUED...

AB. PROVIDE 20A, 480V, 2P, 35KAIC RATED ENCLOSED CIRCUIT BREAKER WITH NEMA 12 ENCLOSURE.

AC. TAP NEW FEEDER TO EXISTING FEEDER, A AND B PHASES, INSIDE EXISTING WIREWAY. MAKE SPLICES USING SPLIT BOLT TYPE CONNECTORS AND BUILT-UP VINYL ELECTRICAL TAPE INSULATION.

N

GRAPHIC SCALE

0' 1' 2' 3' 4' 8' 12'

1/4" = 1'-0"

SYM.	ZONE	DESCRIPTION	DATE	APPROVED
		REVISIONS		

URS
7650 West Courtney Campbell Causeway
Suite 700
Tampa, Florida 33607
Ph: (813) 286-1711 Fax: (813) 286-6587
Florida Engineering Number: 000002

SIGNATURES		DATE
DRAWN	TRS	9/24/12
CHECKED	GHD	9/24/12
SUBMITTED	GARRET KERLY	9/24/12
ST OF LICENSURE: FL		
LICENSE NO.: 54952		
APPROVED	F. WALKER	9/24/12
	S. MEHTA	9/25/12

NATIONAL AERONAUTICS AND SPACE ADMINISTRATION
JOHN F. KENNEDY SPACE CENTER, NASA
KENNEDY SPACE CENTER, FLORIDA

REVITALIZE MEDIUM VOLTAGE ELECTRICAL DISTRIBUTION SYSTEMS, INDUSTRIAL AND PAYLOAD PROCESSING AREAS
PARTIAL PLAN – O&C BLDG. (M7-355) MECH. RM. 1410 – MODIFIED

E-423

FILE NO. | SIZE F | DWG. NO. 79K39135
PCN NO. 98860 | SHEET 60

KSC FORM 1-11A (REV 5/91) (C/G 12/93)

T:\NASA KSC\Task 90\Drawings\E-423 and 424 Enlarged Plans.dwg 09/20/2012 14:04

NOTICE – WHEN GOVERNMENT DRAWINGS, SPECIFICATIONS, OR OTHER DATA ARE USED FOR ANY PURPOSE OTHER THAN IN CONNECTION WITH A DEFINITELY RELATED GOVERNMENT PROCUREMENT OPERATION, THE UNITED STATES GOVERNMENT THEREBY INCURS NO RESPONSIBILITY NOR ANY OBLIGATION WHATSOEVER; AND THE FACT THAT THE GOVERNMENT MAY HAVE FORMULATED, FURNISHED, OR IN ANY WAY SUPPLIED THE SAID DRAWINGS, SPECIFICATIONS, OR OTHER DATA IS NOT TO BE REGARDED BY IMPLICATION OR OTHERWISE AS IN ANY MANNER LICENSING THE HOLDER OR ANY OTHER PERSON OR CORPORATION, OR CONVEYING ANY RIGHTS OR PERMISSION TO MANUFACTURE, USE, OR SELL ANY PATENTED INVENTION THAT MAY IN ANY WAY BE RELATED THERETO.

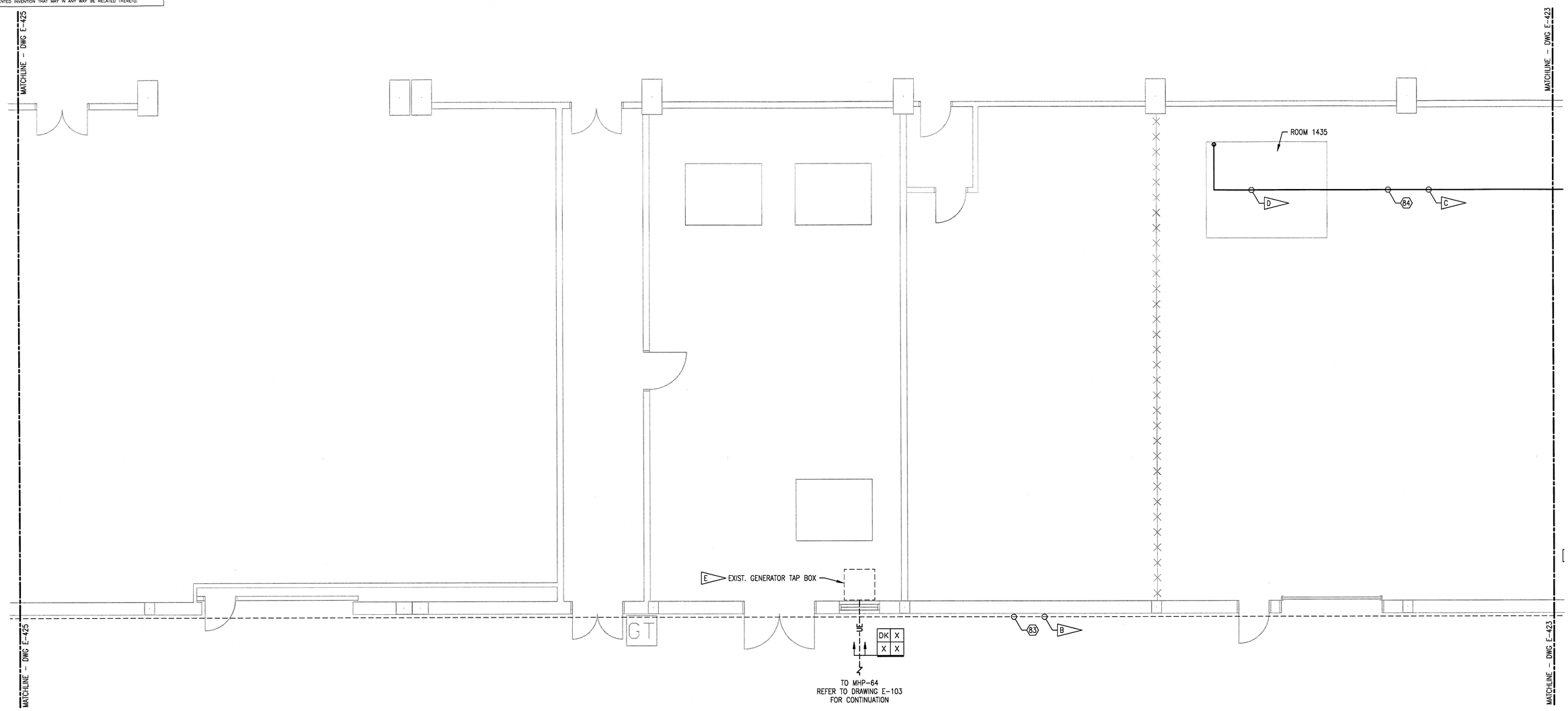

PARTIAL PLAN – O&C BLDG M7-355 – MODIFIED (1 / E-103)

SCALE: 1/4" = 1'-0"

SPECIFIC NOTES:

A. REFER TO DRAWING E-004 FOR MODIFIED CABLE SCHEDULE.

B. EXISTING EMPTY/SPARE 1.25" GRS CONDUIT RECENTLY INSTALLED UNDER THE OPERATIONS AND CHECKOUT FACILITY (M7-0355) PHASE V PROJECT. USE THIS CONDUIT TO ROUTE NEW FEEDER.

C. PROVIDE 2" GRS CONDUIT ROUTED EXPOSED OVERHEAD, IN WHICH TO ROUTE NEW COMMUNICATIONS CABLE BETWEEN O&C BUILDING M7-355 ROOM NO. 1435 AND SUBSTATIONS SS-227A AND -227B.

D. COORDINATE CONDUIT TERMINATION LOCATION IN THIS ROOM WITH THE NASA COMMUNICATIONS GROUP. LEAVE 30'-0" OF SLACK IN EACH COMMUNICATIONS CABLE NEATLY BUNDLED, COILED, SECURED, AND IDENTIFIED, FOR TERMINATION BY NASA COMMUNICATIONS GROUP.

E. DEMOLISH EXISTING MV CABLES "DK" BETWEEN THE GENERATOR TAP BOX AND SUBSTATION SS-F. RE-LABEL BOX AS "SPARE DUCT TO MHP-64".

N

GRAPHIC SCALE

0' 1' 2' 3' 4' 8' 12'

1/4" = 1'-0"

E-424

SYM.	ZONE	DESCRIPTION	DATE	APPROVED
		REVISIONS		

URS
7650 West Courtney Campbell Causeway
Suite 700
Tampa, Florida 33607
Ph: (813) 286-1711 Fax: (813) 286-6587
Florida Engineering Number: 000002

SIGNATURES		DATE
DRAWN	TRS	9/24/12
CHECKED	GHD	9/24/12
SUBMITTED	GARRET KERLY	9/24/12
ST OF LICENSURE: FL		
LICENSE NO.: 54952		
APPROVED	F. WALKER	9/24/12
	S. MEHTA	9/25/12

NATIONAL AERONAUTICS AND SPACE ADMINISTRATION
JOHN F. KENNEDY SPACE CENTER, NASA
KENNEDY SPACE CENTER, FLORIDA

REVITALIZE MEDIUM VOLTAGE
ELECTRICAL DISTRIBUTION SYSTEMS,
INDUSTRIAL AND PAYLOAD PROCESSING AREAS
PARTIAL PLAN – O&C BLDG.
(M7-355) EXTERIOR SOUTH –
MODIFIED

FILE NO.	SIZE	DWG. NO.
	F	79K39135
PCN NO. 98860		SHEET 61

T:\NASA KSC\Task No. \Drawings\E-424 and 425 ENGINEERED PLANS.dwg 09/20/2012 1:04

KSC FORM 1-11A (REV 6/91) (C/G 12/93)

NOTICE – WHEN GOVERNMENT DRAWINGS, SPECIFICATIONS, OR OTHER DATA ARE USED FOR ANY PURPOSE OTHER THAN IN CONNECTION WITH A DEFINITELY RELATED GOVERNMENT PROCUREMENT OPERATION, THE UNITED STATES GOVERNMENT THEREBY INCURS NO RESPONSIBILITY NOR ANY OBLIGATION WHATSOEVER; AND THE FACT THAT THE GOVERNMENT MAY HAVE FORMULATED, FURNISHED, OR IN ANY WAY SUPPLIED THE SAID DRAWINGS, SPECIFICATIONS, OR OTHER DATA IS NOT TO BE REGARDED BY IMPLICATION OR OTHERWISE AS IN ANY MANNER LICENSING THE HOLDER OR ANY OTHER PERSON OR CORPORATION, OR CONVEYING ANY RIGHTS OR PERMISSION TO MANUFACTURE, USE, OR SELL ANY PATENTED INVENTION THAT MAY IN ANY WAY BE RELATED THERETO.

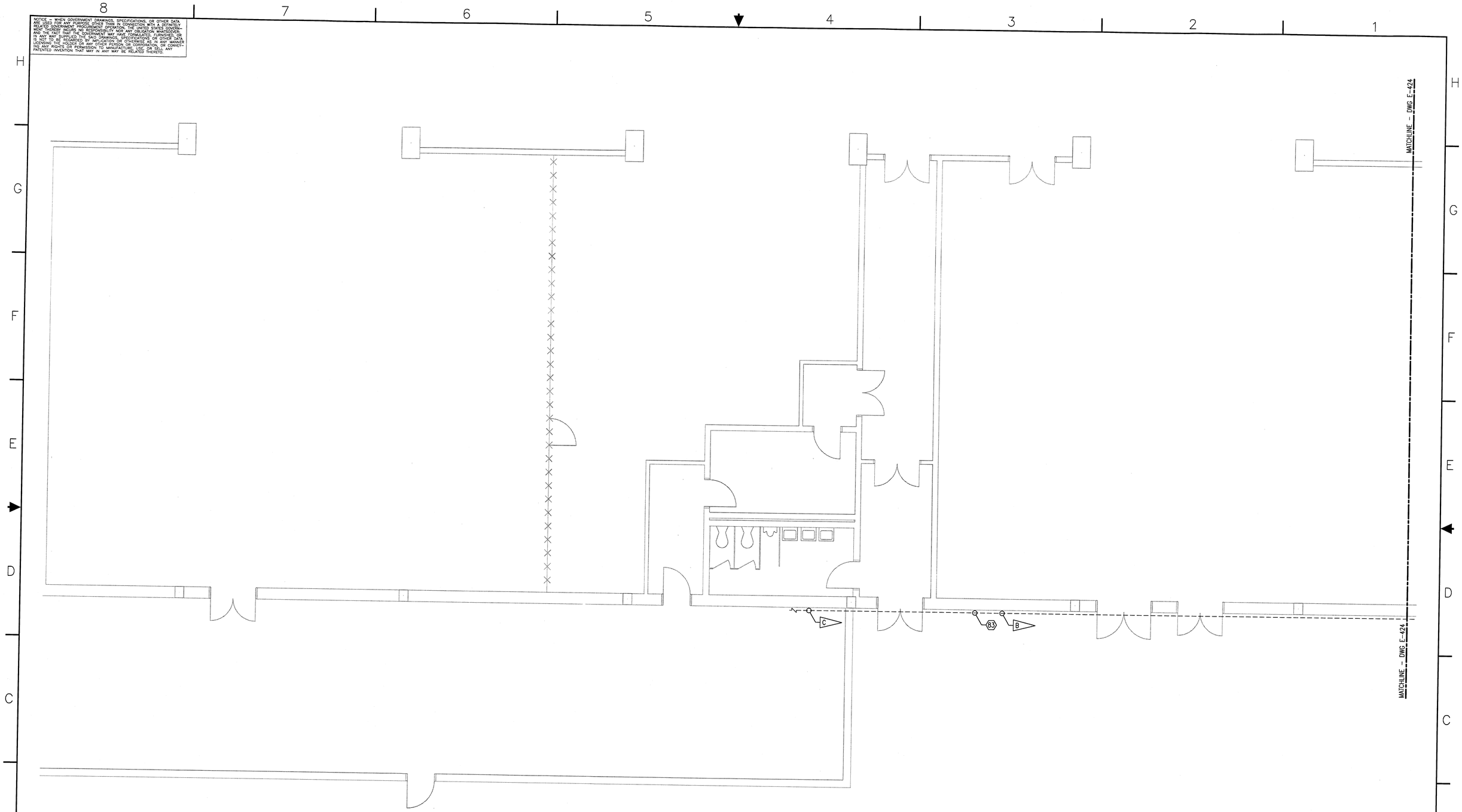

PARTIAL PLAN – O&C BLDG M7-355 – MODIFIED (1 / E-103)

SCALE: 1/4" = 1'-0"

SPECIFIC NOTES:

A. REFER TO DRAWING E-004 FOR MODIFIED CABLE SCHEDULE.

B. EXISTING EMPTY/SPARE 1.25" GRS CONDUIT RECENTLY INSTALLED UNDER THE OPERATIONS AND CHECKOUT FACILITY (M7-0355) PHASE V PROJECT. USE THIS CONDUIT TO ROUTE NEW FEEDER.

C. FIELD VERIFY LOCATION OF EXISTING FIRE PUMP AUTOMATIC TRANSFER SWITCH (FP ATS) IN THIS ROOM. ROUTE NEW FEEDER TO FP ATS AND MAKE CONNECTIONS THERETO.

N

GRAPHIC SCALE

0' 1' 2' 3' 4' 8' 12'

1/4" = 1'-0"

E-425

SYM.	ZONE	DESCRIPTION	DATE	APPROVED
		REVISIONS		

URS
7650 West Courtney Campbell Causeway
Suite 700
Tampa, Florida 33607
Ph: (813) 286-1711 Fax: (813) 286-6587
Florida Engineering Number: 000002

SIGNATURES		DATE
DRAWN	TRS	9/24/12
CHECKED	GHD	9/24/12
SUBMITTED	GARRET KERLY	9/24/12
ST OF LICENSURE: FL		
LICENSE NO.: 54952		
APPROVED	F. WALKER	9/25/12
	S. MEHTA	9/25/12

NATIONAL AERONAUTICS AND SPACE ADMINISTRATION
JOHN F. KENNEDY SPACE CENTER, NASA
KENNEDY SPACE CENTER, FLORIDA

REVITALIZE MEDIUM VOLTAGE ELECTRICAL DISTRIBUTION SYSTEMS, INDUSTRIAL AND PAYLOAD PROCESSING AREAS
PARTIAL PLAN – O&C BLDG. (M7-355) FIRE PUMP RM. – MODIFIED

FILE NO.	SIZE	DWG. NO.
	F	79K39135
PCN NO. 98860		SHEET 62

T:\NASA KSC\Jobs No. 1\Drawings\E-425 and 426 ENGINEERED PLANS.dwg 09/20/2012 1:24:04

KSC FORM 1-11A (REV 6/91) (C/G 12/93)

NOTICE – WHEN GOVERNMENT DRAWINGS, SPECIFICATIONS, OR OTHER DATA ARE USED FOR ANY PURPOSE OTHER THAN IN CONNECTION WITH A DEFINITELY RELATED GOVERNMENT PROCUREMENT OPERATION, THE UNITED STATES GOVERNMENT THEREBY INCURS NO RESPONSIBILITY NOR ANY OBLIGATION WHATSOEVER; AND THE FACT THAT THE GOVERNMENT MAY HAVE FORMULATED, FURNISHED, OR IN ANY WAY SUPPLIED THE SAID DRAWINGS, SPECIFICATIONS OR OTHER DATA IS NOT TO BE REGARDED BY IMPLICATION OR OTHERWISE AS IN ANY MANNER LICENSING THE HOLDER OR ANY OTHER PERSON OR CORPORATION, OR CONVEYING ANY RIGHTS OR PERMISSION TO MANUFACTURE, USE, OR SELL ANY PATENTED INVENTION THAT MAY IN ANY WAY BE RELATED THERETO.

SPECIFIC NOTES:

A. REFER TO DRAWING E-003 FOR EXISTING CABLE SCHEDULE.

B. CONDUITS, ROUTED WITHIN CEILING SPACE OF ROOMS BELOW MEZZANINE, TO REMAIN INTACT.

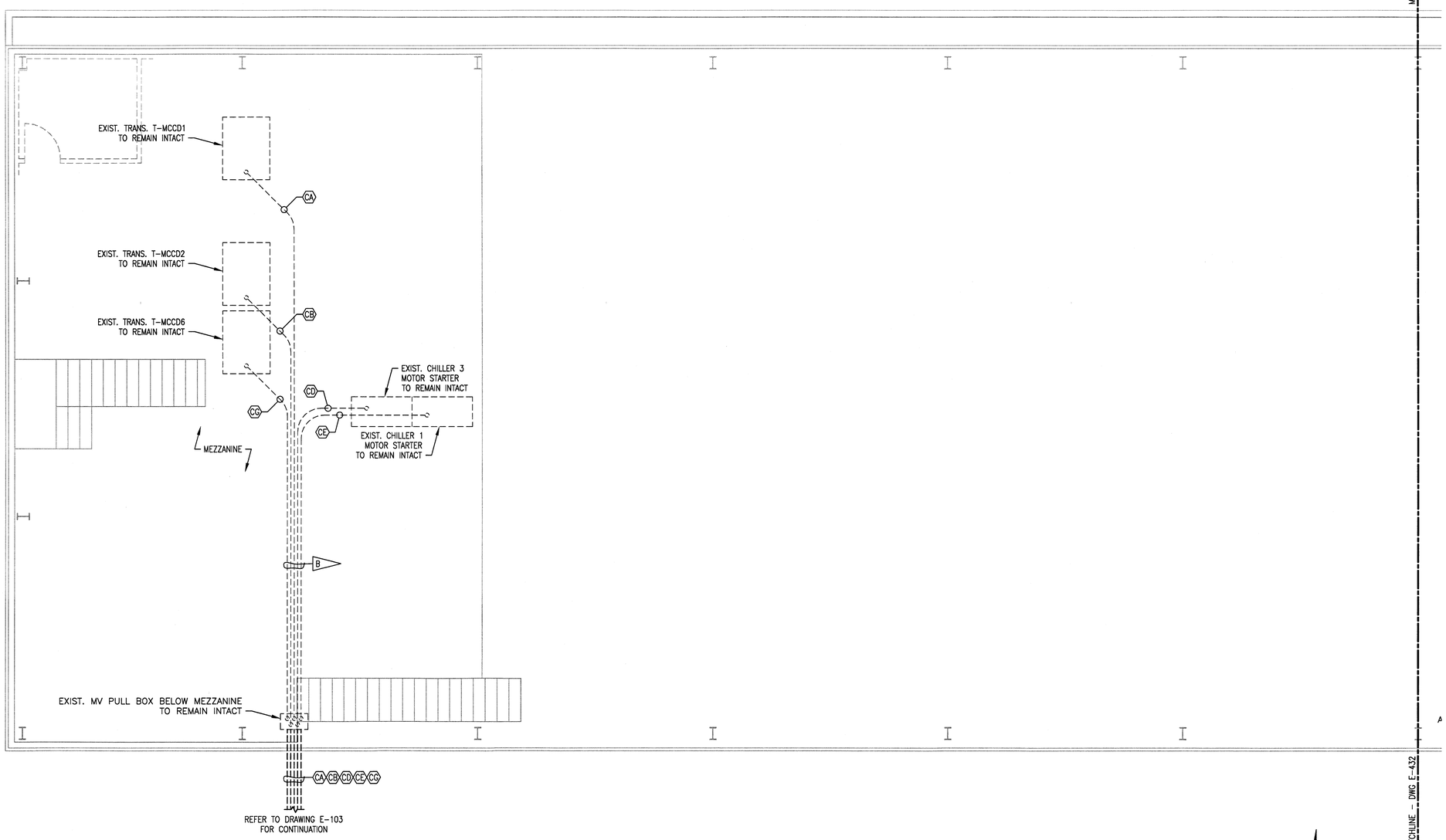

PARTIAL PLAN – IACP (M7-407) WEST END – DEMOLITION (1 / E-103)

SCALE: 1/4" = 1'-0"

N

GRAPHIC SCALE

0' 1' 2' 3' 4' 8' 12'

1/4" = 1'-0"

E-431

SYM.	ZONE	DESCRIPTION	DATE	APPROVED

REVISIONS

URS

7650 West Courtney Campbell Causeway
Suite 700
Tampa, Florida 33607
Ph: (813) 286-1711 Fax: (813) 286-6587
Florida Engineering Number: 000002

SIGNATURES		DATE
DRAWN	TRS	9/24/12
CHECKED	GHD	9/24/12
SUBMITTED	GARRET KERR	9/24/12
ST OF LICENSURE: FL		
LICENSE NO.: 54952		
APPROVED	F. WALKER	9/24/12
	S. MEHTA	9/25/12

NATIONAL AERONAUTICS AND SPACE ADMINISTRATION
JOHN F. KENNEDY SPACE CENTER, NASA
KENNEDY SPACE CENTER, FLORIDA

REVITALIZE MEDIUM VOLTAGE ELECTRICAL DISTRIBUTION SYSTEMS, INDUSTRIAL AND PAYLOAD PROCESSING AREAS

PARTIAL PLAN – IACP (M7-407) WEST END – DEMOLTION

FILE NO.	SIZE	DWG. NO.
	F	79K39135

PCN NO. 98860 SHEET 63

I:\NASA KSC\Tom Kc. K\Drawings\E-425 and 435 Demo\ED PLANS.dwg 09/20/2012 8:04

KSC FORM 1-11A (REV 8/91) (C/G 12/93)

NOTICE – WHEN GOVERNMENT DRAWINGS, SPECIFICATIONS, OR OTHER DATA ARE USED FOR ANY PURPOSE OTHER THAN IN CONNECTION WITH A DEFINITELY RELATED GOVERNMENT PROCUREMENT OPERATION, THE UNITED STATES GOVERNMENT THEREBY INCURRS NO RESPONSIBILITY NOR ANY OBLIGATION WHATSOEVER; AND THE FACT THAT THE GOVERNMENT MAY HAVE FORMULATED, FURNISHED, OR IN ANY WAY SUPPLIED THE SAID DRAWINGS, SPECIFICATIONS OR OTHER DATA IS NOT TO BE REGARDED BY IMPLICATION OR OTHERWISE AS IN ANY MANNER LICENSING THE HOLDER OR ANY OTHER PERSON OR CORPORATION, OR CONVEYING ANY RIGHTS OR PERMISSION TO MANUFACTURE, USE OR SELL ANY PATENTED INVENTION THAT MAY IN ANY WAY BE RELATED THERETO.

SPECIFIC NOTES:

A. REFER TO DRAWING E-003 FOR EXISTING CABLE SCHEDULE.

B. PROVIDE FOR THE DEMOLITION, AND REPLACEMENT WITH NEW, OF THE EXISTING PRIMARY FEEDER SERVING EXISTING TRANSFORMER T-MCCD7. REFER TO DRAWINGS S-302 AND E-434 FOR REQUIREMENTS.

C. EXISTING CONDUIT TO REMAIN INTACT.

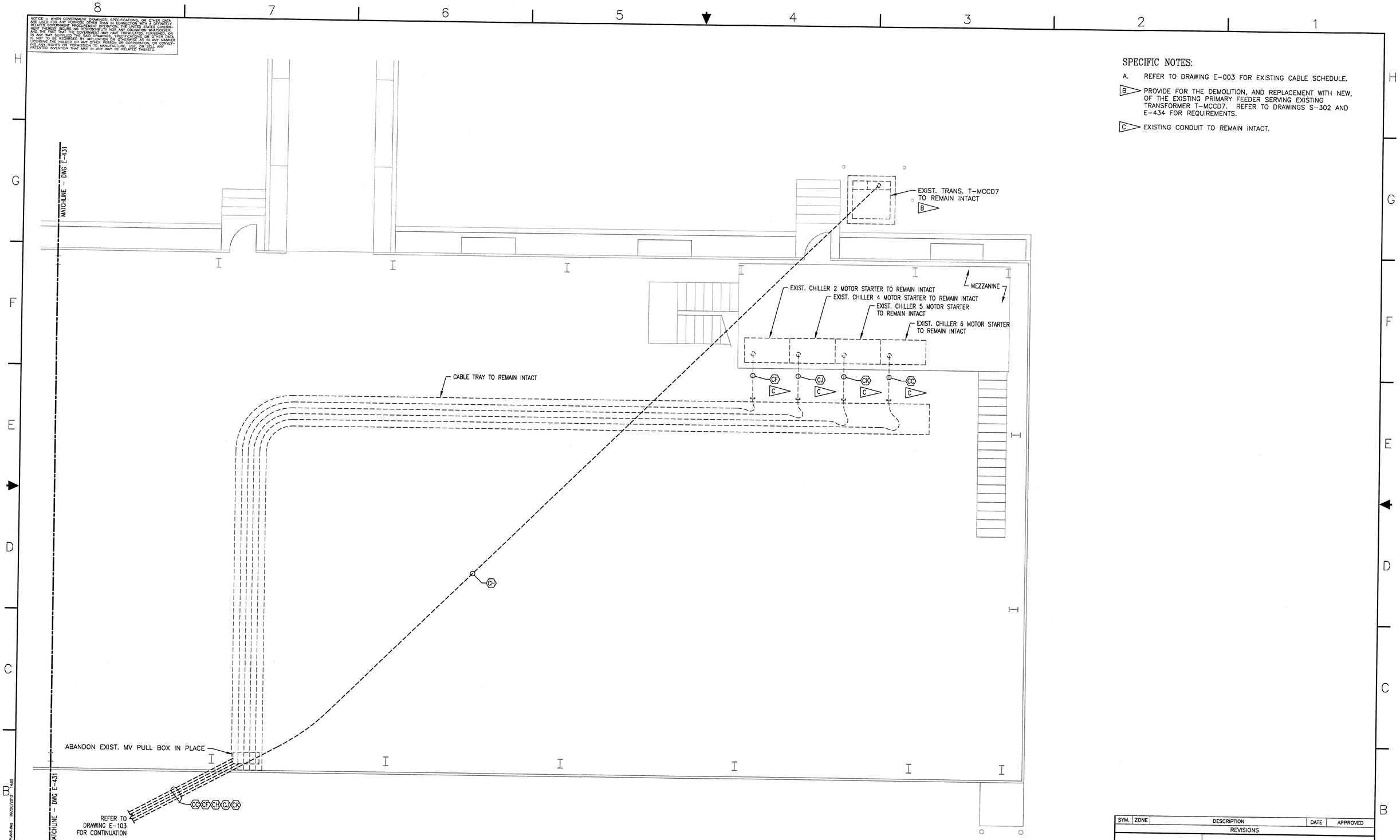

PARTIAL PLAN – IACP (M7-407) EAST END – DEMOLITION

SCALE: 1/4" = 1'-0"

1 / E-103 E-104 E-415

N

GRAPHIC SCALE

0' 1' 2' 3' 4' 8' 12'

1/4" = 1'-0"

E-432

SYM.	ZONE	DESCRIPTION	DATE	APPROVED
		REVISIONS		

URS
7650 West Courtney Campbell Causeway
Suite 700
Tampa, Florida 33607
Ph: (813) 286-1711 Fax: (813) 286-6587
Florida Engineering Number: 000002

SIGNATURES		DATE
DRAWN	TRS	9/24/12
CHECKED	GHD	9/24/12
SUBMITTED	GARRET KENT	9/24/12
ST OF LICENSURE: FL		
LICENSE NO.: 54952		
APPROVED	F. WALKER	9/24/12
	S. MEHTA	9/25/12

NATIONAL AERONAUTICS AND SPACE ADMINISTRATION
JOHN F. KENNEDY SPACE CENTER, NASA
KENNEDY SPACE CENTER, FLORIDA

REVITALIZE MEDIUM VOLTAGE ELECTRICAL DISTRIBUTION SYSTEMS, INDUSTRIAL AND PAYLOAD PROCESSING AREAS

PARTIAL PLAN – IACP (M7-407) EAST END – DEMOLITION

FILE NO.	SIZE	DWG. NO.
	F	79K39135
PCN NO. 98860		SHEET 64

KSC FORM 1-11A (REV 6/91) (C/G 12/93)

NOTICE – WHEN GOVERNMENT DRAWINGS, SPECIFICATIONS, OR OTHER DATA ARE USED FOR ANY PURPOSE OTHER THAN IN CONNECTION WITH A DEFINITELY RELATED GOVERNMENT PROCUREMENT OPERATION, THE UNITED STATES GOVERNMENT THEREBY INCURS NO RESPONSIBILITY NOR ANY OBLIGATION WHATSOEVER; AND THE FACT THAT THE GOVERNMENT MAY HAVE FORMULATED, FURNISHED, OR IN ANY WAY SUPPLIED THE SAID DRAWINGS, SPECIFICATIONS, OR OTHER DATA IS NOT TO BE REGARDED, BY IMPLICATION OR OTHERWISE AS IN ANY MANNER LICENSING THE HOLDER OR ANY OTHER PERSON OR CORPORATION, OR CONVEYING ANY RIGHTS OR PERMISSION TO MANUFACTURE, USE, OR SELL ANY PATENTED INVENTION THAT MAY IN ANY WAY BE RELATED THERETO.

SPECIFIC NOTES:

A. REFER TO DRAWING E-004 FOR MODIFIED CABLE SCHEDULE.

B. EXISTING CONDUITS, ROUTED WITHIN CEILING SPACE OF ROOMS BELOW MEZZANINE, TO REMAIN INTACT. REUSE THESE CONDUITS TO INSTALL NEW MV FEEDERS.

C. REFER TO DRAWING E-436 FOR CONDUIT REQUIREMENTS.

D. PROVIDE 1 1/2" GRS CONDUIT FOR COMMUNICATIONS CABLING BETWEEN ENTRANCE FACILITY (EF) / EQUIPMENT ROOM (ER) AND COMMUNICATION PULL BOX SHOWN ON DRAWING E-434. TERMINATE EACH END OF EACH CONDUIT WITH AN INSULATED THROAT BUSHING.

E. COORDINATE CONDUIT TERMINATION LOCATION IN FIELD WITH NASA COMMUNICATION GROUP. LEAVE 30'-0" OF SLACK IN EACH COMMUNICATIONS CABLE NEATLY BUNDLED, COILED, SECURED AND IDENTIFIED, FOR TERMINATION BY NASA COMMUNICATIONS GROUP.

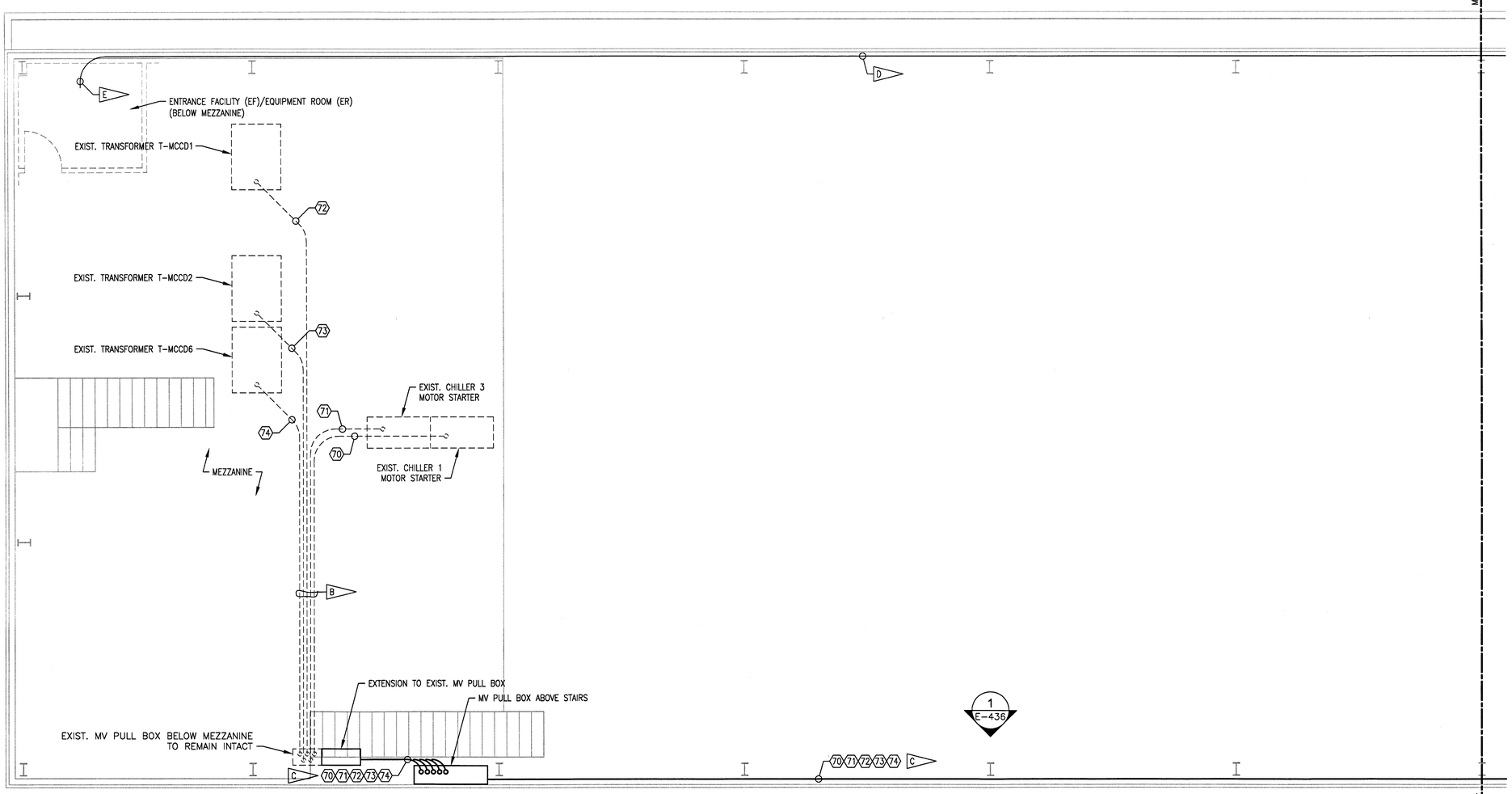

PARTIAL PLAN – IACP (M7-407) WEST END – MODIFIED (1 / E-103)
SCALE: 1/4" = 1'-0"

N

GRAPHIC SCALE
0' 1' 2' 3' 4' 8' 12'
1/4" = 1'-0"

E-433

SYM.	ZONE	DESCRIPTION	DATE	APPROVED
		REVISIONS		

URS
7650 West Courtney Campbell Causeway
Suite 700
Tampa, Florida 33607
Ph: (813) 286-1711 Fax: (813) 286-6587
Florida Engineering Number: 000002

SIGNATURES		DATE
DRAWN	TRS	9/24/12
CHECKED	GHD	9/24/12
SUBMITTED GARRET KERLY		9/24/12
ST OF LICENSURE: FL		
LICENSE NO.: 54952		
APPROVED F. WALKER		9/24/12
S. MEHTA		9/25/12

NATIONAL AERONAUTICS AND SPACE ADMINISTRATION
JOHN F. KENNEDY SPACE CENTER, NASA
KENNEDY SPACE CENTER, FLORIDA

REVITALIZE MEDIUM VOLTAGE ELECTRICAL DISTRIBUTION SYSTEMS, INDUSTRIAL AND PAYLOAD PROCESSING AREAS

PARTIAL PLAN – IACP (M7-407) WEST END – MODIFIED

FILE NO.	SIZE	DWG. NO.
	F	79K39135
PCN NO. 98860		SHEET 65

T:\NASA KSC\Task 96_1\Drawings\E-429 and 430 ENGINEERED PLANS.dwg 09/20/2012 14:05

KSC FORM 1-11A (REV 6/91) (C/G 8/93)

NOTICE – WHEN GOVERNMENT DRAWINGS, SPECIFICATIONS, OR OTHER DATA ARE USED FOR ANY PURPOSE OTHER THAN IN CONNECTION WITH A DEFINITELY RELATED GOVERNMENT PROCUREMENT OPERATION, THE UNITED STATES GOVERNMENT THEREBY INCURS NO RESPONSIBILITY NOR ANY OBLIGATION WHATSOEVER; AND THE FACT THAT THE GOVERNMENT HAS FORMULATED, FURNISHED, OR IN ANY WAY SUPPLIED THE SAID DRAWINGS, SPECIFICATIONS, OR OTHER DATA IS NOT TO BE REGARDED BY IMPLICATION OR OTHERWISE AS IN ANY MANNER LICENSING THE HOLDER OR ANY OTHER PERSON OR CORPORATION, OR CONVEYING ANY RIGHTS OR PERMISSION TO MANUFACTURE, USE, OR SELL ANY PATENTED INVENTION THAT MAY IN ANY WAY BE RELATED THERETO.

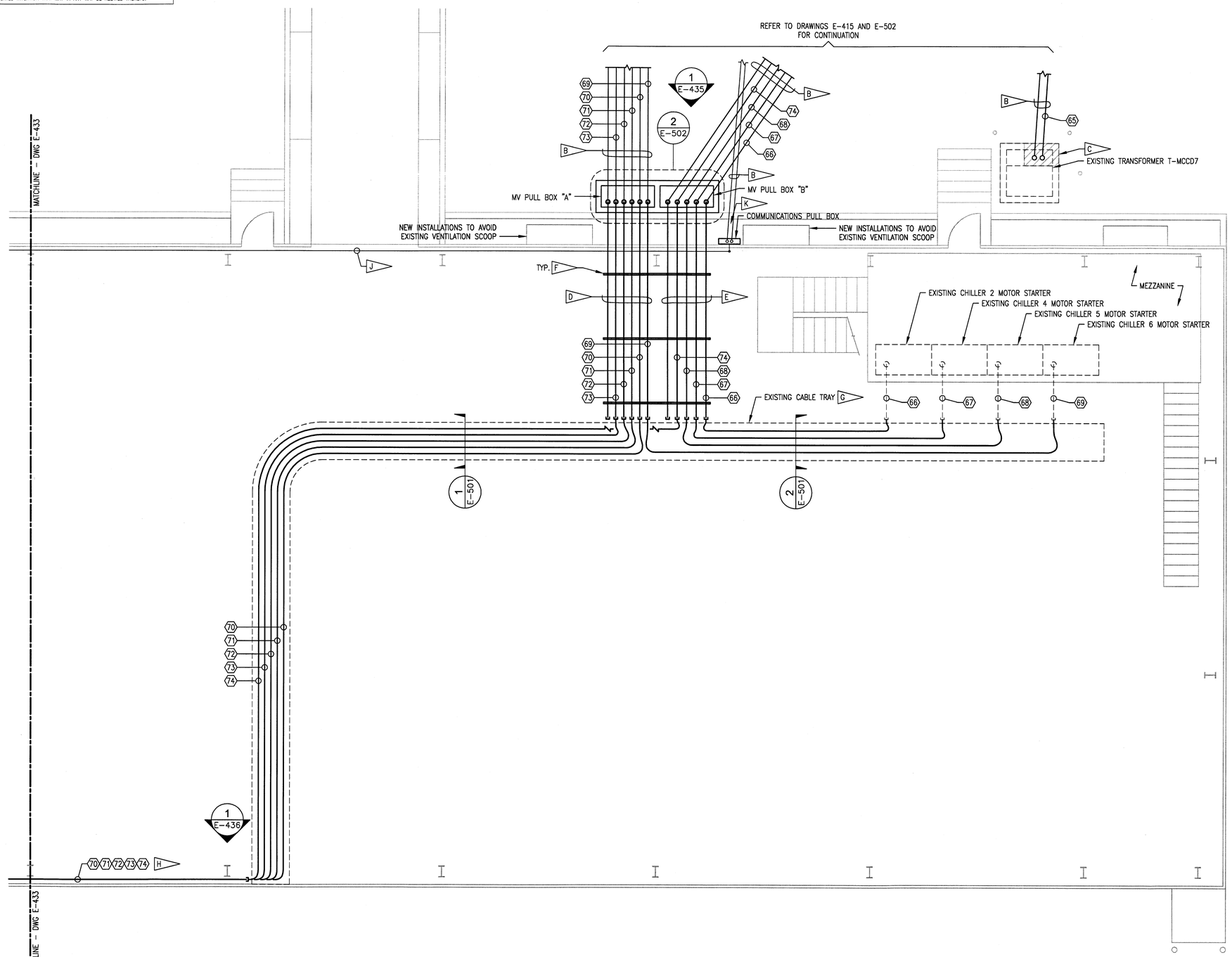

PARTIAL PLAN – IACP (M7-407) EAST END – MODIFIED

SCALE: 1/4" = 1'-0"

1 / E-103, E-104, E-415

N

GRAPHIC SCALE

0' 1' 2' 3' 4' 8' 12'

1/4" = 1'-0"

E-434

SPECIFIC NOTES:

A. REFER TO DRAWING E-004 FOR MODIFIED CABLE SCHEDULE.

B. REFER TO DRAWING E-415 FOR CONDUIT REQUIREMENTS.

C. DEMOLISH PORTION OF TRANSFORMER CONCRETE EQUIPMENT PAD BELOW PRIMARY TERMINATION COMPARTMENT AS REQUIRED TO PERMIT INSTALLATION OF NEW CONDUITS UP INTO TRANSFORMER PRIMARY TERMINATION COMPARTMENT. PATCH CONCRETE EQUIPMENT PAD WITH NEW TO MATCH EXISTING. TEMPORARILY REMOVE TRANSFORMER FROM CONCRETE EQUIPMENT PAD AS REQUIRED TO COMPLETE THIS WORK. RESET TRANSFORMER BACK ON CONCRETE EQUIPMENT PAD AFTER THIS WORK IS COMPLETE, AND PLACE TRANSFORMER BACK INTO SERVICE. REFER TO DRAWING S-302 FOR REQUIREMENTS.

D. PROVIDE SIX 4" CONDUITS, FIVE ACTIVE AND ONE EMPTY/SPARE WITH PULL ROPE, BETWEEN TOP OF MV PULL BOX "A" AND EXISTING CABLE TRAY. TERMINATE EACH END OF EACH CONDUIT WITH A GROUNDING BUSHING. OUTDOORS, PROVIDE PVC COATED GRS CONDUIT. INDOORS, PROVIDE GRS CONDUIT AND PAINT ORANGE PER NASA STANDARD.

E. PROVIDE FIVE 4" CONDUITS, FOUR ACTIVE AND ONE EMPTY/SPARE WITH PULL ROPE, BETWEEN TOP OF MV PULL BOX "B" AND EXISTING CABLE TRAY. TERMINATE EACH END OF EACH CONDUIT WITH A GROUNDING BUSHING. PAINT THESE CONDUITS ORANGE PER NASA STANDARD. OUTDOORS, PROVIDE PVC COATED GRS CONDUIT. INDOORS, PROVIDE GRS CONDUIT AND PAINT ORANGE PER NASA STANDARD.

F. PROVIDE TRAPEZE CONDUIT SUPPORT.

G. INSTALL NEW MV FEEDERS IN EXISTING CABLE TRAY. PROVIDE NEW WARNING LABELS ON EACH SIDE OF EXISTING CABLE TRAY, WITH SPACING NOT TO EXCEED 10'-0" BETWEEN LABELS ON THE SAME SIDE OF THE CABLE TRAY, FOR CONFORMANCE WITH NEC2011 ART. 392.18 (H).

H. REFER TO DRAWING E-436 FOR CONDUIT REQUIREMENTS.

J. REFER TO DRAWING E-433 FOR CONDUIT REQUIREMENTS.

K. DEMOLISH PORTION OF EXISTING ROCK BED CURBING AS REQUIRED TO PERMIT INSTALLATION OF NEW CONDUITS UP TO COMMUNICATIONS PULL BOX. PATCH CURBING IN KIND WITH NEW TO MATCH EXISTING.

SYM.	ZONE	DESCRIPTION	DATE	APPROVED

REVISIONS

URS
7650 West Courtney Campbell Causeway
Suite 700
Tampa, Florida 33607
Ph: (813) 286-1711 Fax: (813) 286-6587
Florida Engineering Number: 000002

SIGNATURES		DATE
DRAWN	TRS	9/24/12
CHECKED	GHD	9/24/12
SUBMITTED	GARRET KERLY	9/24/12
ST OF LICENSURE: FL		
LICENSE NO.: 54952		
APPROVED	F. WALKER	9/25/12
	S. MEHTA	9/25/12

NATIONAL AERONAUTICS AND SPACE ADMINISTRATION
JOHN F. KENNEDY SPACE CENTER, NASA
KENNEDY SPACE CENTER, FLORIDA

REVITALIZE MEDIUM VOLTAGE
ELECTRICAL DISTRIBUTION SYSTEMS,
INDUSTRIAL AND PAYLOAD PROCESSING AREAS

PARTIAL PLAN – IACP (M7-407)
EAST END – MODIFIED

FILE NO.	SIZE	DWG. NO.
	F	79K39135
PCN NO. 98860		SHEET 66

T:\NASA KSC\Task No. 1\Drawings\E-429 and 439 ENHANCED PLANS.dwg 09/20/2012 14:05
KSC FORM 1-11A (REV 8/91) (C/G 8/93)

NOTICE – WHEN GOVERNMENT DRAWINGS, SPECIFICATIONS, OR OTHER DATA ARE USED FOR ANY PURPOSE OTHER THAN IN CONNECTION WITH A DEFINITELY RELATED GOVERNMENT PROCUREMENT OPERATION, THE UNITED STATES GOVERNMENT THEREBY INCURS NO RESPONSIBILITY NOR ANY OBLIGATION WHATSOEVER; AND THE FACT THAT THE GOVERNMENT MAY HAVE FORMULATED, FURNISHED, OR IN ANY WAY SUPPLIED THE SAID DRAWINGS, SPECIFICATIONS, OR OTHER DATA IS NOT TO BE REGARDED, BY IMPLICATION OR OTHERWISE AS IN ANY MANNER LICENSING THE HOLDER OR ANY OTHER PERSON OR CORPORATION, OR CONVEYING ANY RIGHTS OR PERMISSION TO MANUFACTURE, USE, OR SELL ANY PATENTED INVENTION THAT MAY IN ANY WAY BE RELATED THERETO.

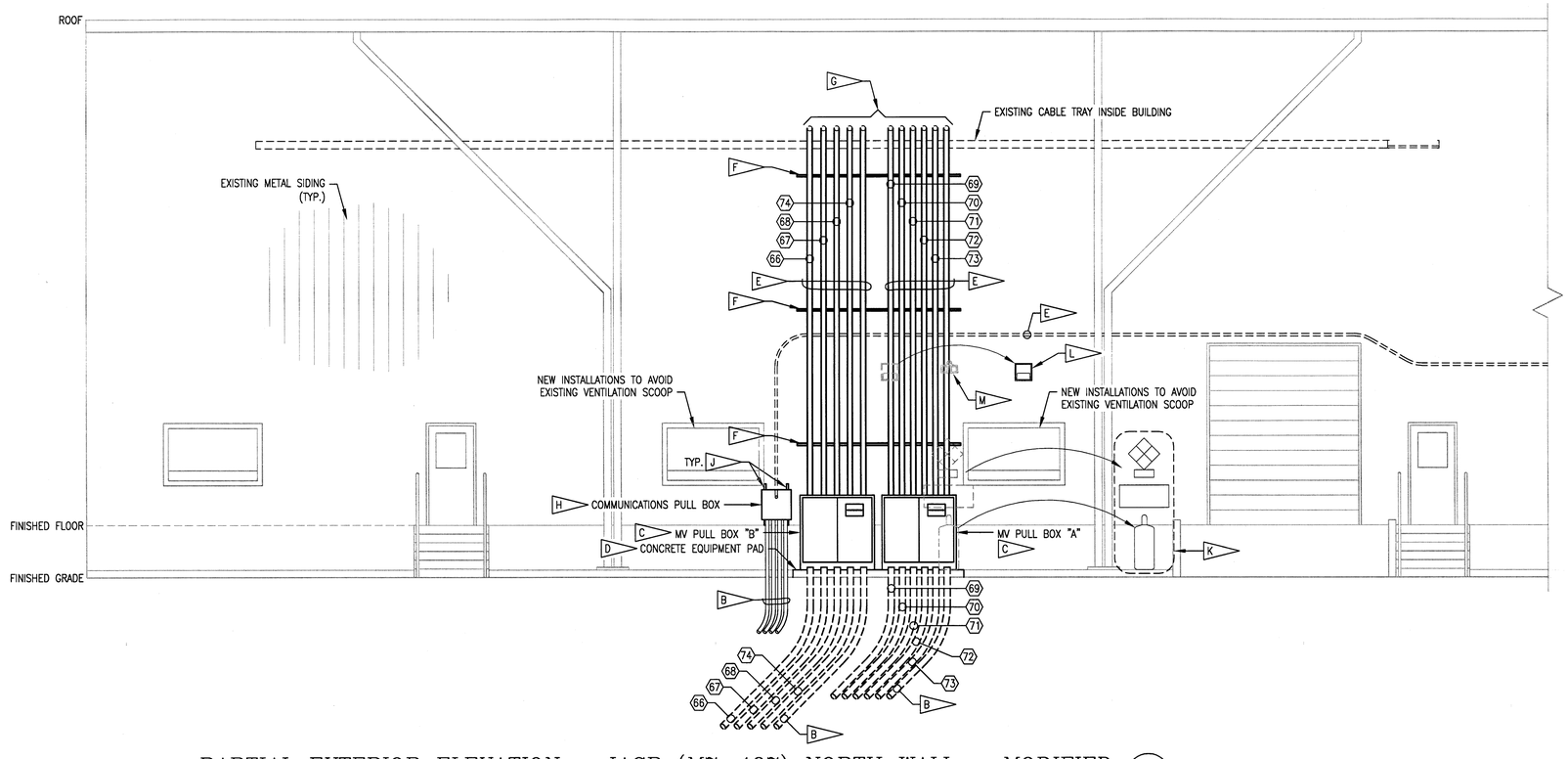

PARTIAL EXTERIOR ELEVATION – IACP (M7-407) NORTH WALL – MODIFIED (1 / E-434)

SCALE: 1/4" = 1'-0"

SPECIFIC NOTES:

A. REFER TO DRAWING E-004 FOR MODIFIED CABLE SCHEDULE.

B. REFER TO DRAWING E-415 FOR CONDUIT REQUIREMENTS.

C. PROVIDE CUSTOM FABRICATED NEMA TYPE 3R, OPEN BOTTOM, 316 STAINLESS STEEL PULL BOX FABRICATED OF MINIMUM 12 GAUGE SHEET STOCK WITH NOMINAL DIMENSIONS OF 60" W. BY 72" H. BY 24" D. AND TWO CONTINUOUS HINGE DOORS. DOORS SHALL HAVE 3-POINT LATCHING MECHANISM, PAD LOCK HASP, AND ELECTRICAL HAZARD SIGN. HARDWARE AND HINGES SHALL BE 316 STAINLESS STEEL. FASTEN PULL BOX TO CONCRETE EQUIPMENT PAD IN A MINIMUM OF FOUR LOCATIONS, ONE EACH IN EACH CORNER, USING 1/2" DIA. 316 STAINLESS STEEL HARDWARE. PROVIDE FIREPROOFING TAPE ON EACH CABLE INSTALLED THROUGH PULL BOX. ELECTRICAL HAZARD SIGN SHALL BE POLYESTER SELF-ADHESIVE MANUFACTURED TYPE WITH NOMINAL DIMENSIONS OF 10" H. BY 14" W. AND "DANGER HIGH VOLTAGE 4160 VOLTS" LEGEND.

D. PROVIDE CONCRETE EQUIPMENT PAD PER DETAIL 1 ON DRAWING S-401.

E. REFER TO DRAWING E-434 FOR CONDUIT REQUIREMENTS.

F. PROVIDE GALVANIZED STEEL STRUT ON STRUCTURAL SUPPORT ON WHICH TO MOUNT CONDUIT. FASTEN STRUT TO STRUCTURAL SUPPORT USING 3/8" DIA. GALVANIZED STEEL HARDWARE. REFER TO DRAWING S-401 FOR STRUCTURAL SUPPORT DETAILS. PROVIDE 2-COAT EPOXY PAINT FINISH ON STRUCTURAL SUPPORT. FINISH COLOR SHALL MATCH EXISTING METAL SIDING COLOR.

G. CONDUITS SHALL PENETRATE EXISTING METAL SIDING AT ELEVATION REQUIRED TO PLACE THE BOTTOM OF THE CONDUITS 6" ABOVE THE TOP OF EXISTING CABLE TRAY. MAKE CONDUIT PENETRATION WITH A SLIGHT UPWARD SLOPE TO SHED WATER AWAY FROM THE BUILDING. CONDUIT TRANSITION FROM VERTICAL TO HORIZONTAL AT THIS LOCATION SHALL BE MADE USING MINIMUM 36" RADIUS BENDS. MAKE CONDUIT PENETRATIONS WEATHERTIGHT IMMEDIATELY FOLLOWING CONDUIT INSTALLATION.

H. PROVIDE NEMA TYPE 4X, 316 STAINLESS STEEL, CONTINUOUS HINGE DOOR ENCLOSURE FABRICATED OF MINIMUM 14 GAUGE SHEET STOCK WITH NOMINAL DIMENSIONS OF 24" W. BY 24" H. BY 6" D. AND PAD LOCK HASP. ENCLOSURE HARDWARE AND HINGES SHALL BE 316 STAINLESS STEEL. MOUNT ENCLOSURE ON SUPPORT STRUT.

J. PROVIDE 316 STAINLESS STEEL SUPPORT STRUT SPANNING GERTS ON WHICH TO MOUNT ENCLOSURE. FASTEN STRUT EXISTING BUILDING THROUGH METAL SIDING TO GERTS INSIDE BUILDING USING 3/8" DIA. 316 STAINLESS STEEL HARDWARE (i.e. BOLTS, NUTS, WASHERS, AND LOCK WASHERS). MAKE BOLT PENETRATIONS THROUGH METAL SIDING VIA LIBERAL APPLICATION OF CLEAR SILICON CAULK.

K. COORDINATE RELOCATION OF ACETYLENE TANK STORAGE AREA WITH THE GOVERNMENT. RELOCATE ACETYLENE TANK AND ASSOCIATED RETENTION STRAP ASSEMBLY AND SIGNAGE.

L. RELOCATE EXISTING WALL PACK LIGHTING FIXTURE. EXTEND EXISTING LIGHTING CIRCUIT CONDUIT AND WIRING IN KIND WITH NEW TO NEW LOCATION. ROUTE NEW LIGHTING CIRCUIT CONDUIT AND WIRING INSIDE BUILDING. DO NOT RUN NEW LIGHTING CIRCUIT WIRING ALONG THE EXTERIOR SURFACES OF THE BUILDING. PATCH HOLES IN EXISTING METAL SIDING AND PAINT TO MATCH EXISTING ADJACENT METAL SIDING.

M. EXISTING SPEAKER TO REMAIN INTACT AND OPERATIONAL. NEW CONDUIT RUN WILL PROVIDE APPROXIMATELY 40" CLEAR SPACE BETWEEN CONDUIT AND METAL SIDING.

GRAPHIC SCALE

0' 1' 2' 3' 4' 8' 12'

1/4" = 1'-0"

E-435

SYM.	ZONE	DESCRIPTION	DATE	APPROVED
		REVISIONS		

URS
7650 West Courtney Campbell Causeway
Suite 700
Tampa, Florida 33607
Phn: (813) 286-1711 Fax: (813) 286-6587
Florida Engineering Number: 000002

SIGNATURES		DATE
DRAWN	TRS	9/24/12
CHECKED	GHD	9/24/12
SUBMITTED	GARRET KERLY	9/24/12
ST OF LICENSURE: FL		
LICENSE NO.: 54952		
APPROVED	F. WALKER	9/24/12
	S. MEHTA	9/25/12

NATIONAL AERONAUTICS AND SPACE ADMINISTRATION
JOHN F. KENNEDY SPACE CENTER, NASA
KENNEDY SPACE CENTER, FLORIDA

REVITALIZE MEDIUM VOLTAGE ELECTRICAL DISTRIBUTION SYSTEMS, INDUSTRIAL AND PAYLOAD PROCESSING AREAS
PARTIAL EXTERIOR ELEVATION – IACP (M7-407) NORTH WALL – MODIFIED

FILE NO.	SIZE	DWG. NO.
	F	79K39135
PCN NO. 98860		SHEET 67

I:\NASA KSC\Task No. 1\Drawings\E-429 and 435 ENLARGED PLANS.dwg 09/20/2012 14:05

KSC FORM 1-11A (REV 8/91) (C/G 12/93)

NOTICE – WHEN GOVERNMENT DRAWINGS, SPECIFICATIONS, OR OTHER DATA ARE USED FOR ANY PURPOSE OTHER THAN IN CONNECTION WITH A DEFINITELY RELATED GOVERNMENT PROCUREMENT OPERATION, THE UNITED STATES GOVERNMENT THEREBY INCURS NO RESPONSIBILITY NOR ANY OBLIGATION WHATSOEVER; AND THE FACT THAT THE GOVERNMENT MAY HAVE FORMULATED, FURNISHED, OR IN ANY WAY SUPPLIED THE SAID DRAWINGS, SPECIFICATIONS OR OTHER DATA IS NOT TO BE REGARDED BY IMPLICATION OR OTHERWISE IN ANY MANNER LICENSING THE HOLDER OR ANY OTHER PERSON OR CORPORATION, OR CONVEYING ANY RIGHTS OR PERMISSION TO MANUFACTURE, USE OR SELL ANY PATENTED INVENTION THAT MAY IN ANY WAY BE RELATED THERETO.

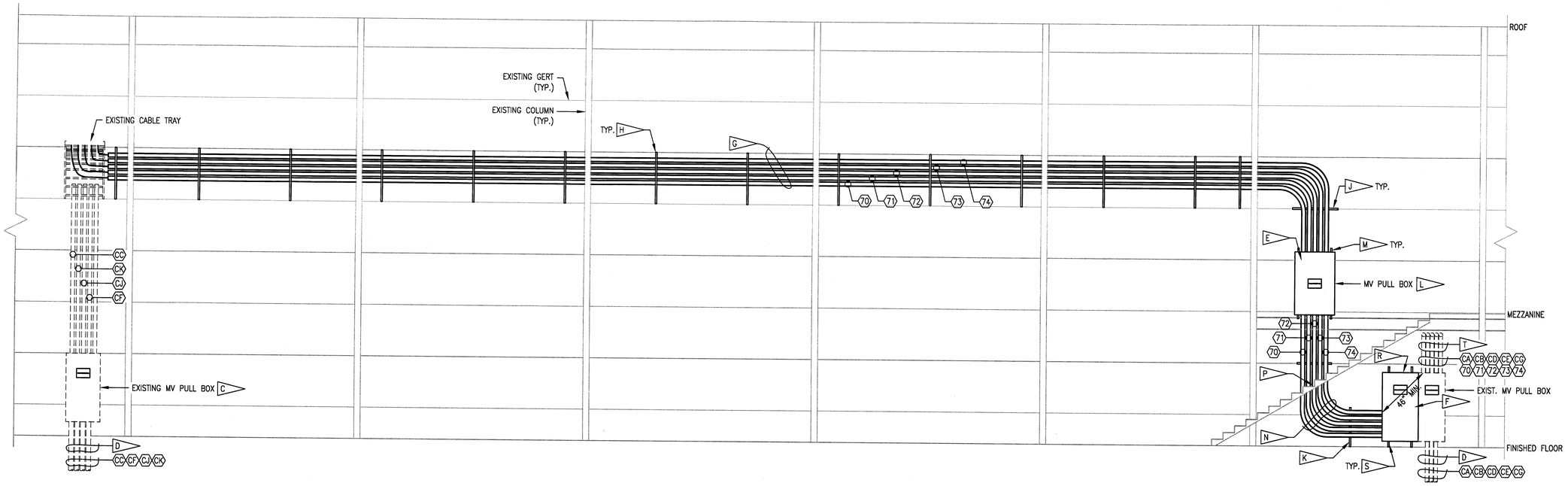

PARTIAL INTERIOR ELEVATION – IACP (M7-407) SOUTH WALL – MODIFIED (1 / E-433 / E-434)

SCALE: 1/4" = 1'-0"

SPECIFIC NOTES:

A. REFER TO DRAWING E-003 FOR EXISTING CABLE SCHEDULE.

B. REFER TO DRAWING E-004 FOR MODIFIED CABLE SCHEDULE.

C. EXISTING MV PULL BOX TO BE ABANDONED IN PLACE UPON COMPLETION OF SPECIFIED MV FEEDER DEMOLITION.

D. EXISTING CONDUITS TO BE ABANDONED IN PLACE UPON COMPLETION OF SPECIFIED MV FEEDER DEMOLITION. COORDINATE THIS WORK WITH NASA.

E. EXISTING COMPRESSED AIR LINES 1" (QTY 2), 3/4", AND 3/8", TO BE RELOCATED BY NASA. COORDINATE THIS WORK WITH NASA.

F. EXISTING FLOW METER INDICATOR TO BE RELOCATED BY NASA. COORDINATE THIS WORK WITH NASA.

G. PROVIDE FIVE 4" GRS CONDUITS BETWEEN EXISTING CABLE TRAY AND TOP OF MV PULL BOX. TERMINATE EACH END OF EACH CONDUIT WITH A GROUNDING BUSHING. PAINT THESE CONDUITS ORANGE PER NASA STANDARD.

H. PROVIDE GALVANIZED STEEL SUPPORT STRUT SPANNING GERTS, ON WHICH TO MOUNT CONDUIT. FASTEN STRUT TO GERTS USING 3/8" DIA. GALVANIZED STEEL HARDWARE.

J. PROVIDE GALVANIZED STEEL SUPPORT STRUT ON GERT, ON WHICH TO MOUNT CONDUIT. FASTEN STRUT TO GERT USING 3/8" DIA. GALVANIZED STEEL HARDWARE.

K. PROVIDE GALVANIZED STEEL SUPPORT STRUT SPANNING GERT TO FLOOR, ON WHICH TO MOUNT CONDUIT. FASTEN STRUT TO GERT USING 3/8" DIA. GALVANIZED STEEL HARDWARE. ANCHOR STRUT TO FLOOR USING CAST FLOOR MOUNT FITTING RECOMMENDED BY THE STRUT MANUFACTURER, AND 3/8" DIA. GALVANIZED STEEL HARDWARE.

L. PROVIDE CUSTOM FABRICATED NEMA TYPE 1 GALVANIZED STEEL SCREW COVER PULL BOX FABRICATED OF MINIMUM 12 GAUGE SHEET STOCK WITH NOMINAL DIMENSIONS OF 42" W. BY 66" H. BY 18" D. PULL BOX SHALL BE HOT DIPPED GALVANIZED AFTER FABRICATION. PROVIDE FIREPROOFING TAPE ON EACH CABLE INSTALLED THROUGH PULL BOX. PROVIDE ELECTRICAL HAZARD SIGN CENTERED ON PULL BOX COVER. ELECTRICAL HAZARD SIGN SHALL BE POLYESTER SELF-ADHESIVE MANUFACTURED TYPE WITH NOMINAL DIMENSIONS OF 10" H. BY 14" W. AND "DANGER HIGH VOLTA 4160 VOLTS" LEGEND. APPLY ELECTRICAL HAZARD SIGN AFTER ALL PAINTING WORK IS COMPLETE.

M. PROVIDE GALVANIZED STEEL SUPPORT STRUT SPANNING GERTS, ON WHICH TO MOUNT MV PULL BOX. FASTEN STRUT TO GERTS USING 3/8" DIA. GALVANIZED STEEL HARDWARE. FASTEN MV PULL BOX TO STRUT USING 3/8" DIA. GALVANIZED STEEL HARDWARE.

N. PROVIDE FIVE 4" GRS CONDUITS BETWEEN BOTTOM OF MV PULL BOX AND SIDE OF EXTENSION TO EXISTING MV PULL BOX. TERMINATE EACH END OF EACH CONDUIT WITH A GROUNDING BUSHING.

SPECIFIC NOTES CONTINUED...

P. ROUTE CONDUIT BETWEEN GERT AND STAIRS.

R. PROVIDE CUSTOM FABRICATED EXTENSION TO EXISTING GALVANIZED STEEL MV PULL BOX. REMOVE EAST SIDE OF EXISTING MV PULL BOX IN ITS ENTIRETY. ATTACH EXTENSION TO EXISTING MV PULL BOX VIA CONTINUOUS BUTT OR LAP WELD JOINT. GRIND OR OTHERWISE FINISH WELD TO ENSURE JOINT IS SMOOTH, BOTH ON THE INSIDE AND THE OUTSIDE OF THE ENCLOSURE, WITHOUT ANY SHARP OR ROUGH EDGES, WHEN FINISHED. EXTENSION WIDTH SHALL BE AS REQUIRED TO INCREASE THE WIDTH OF THE EXISTING MV PULL BOX FROM 28" TO 66". EXTENSION HEIGHT AND DEPTH SHALL EXACTLY MATCH THAT OF THE EXISTING MV PULL BOX. EXTENSION SHALL BE FABRICATED OF MINIMUM 12 GAUGE SHEET GALVANIZED STEEL STOCK. REPAIR ZINC FINISH DAMAGED DURING THE COURSE OF THIS WORK USING FIELD APPLIED COLD GALVANIZING PAINT. MOUNT PULL BOX ON STRUT. PROVIDE FIREPROOFING TAPE ON EACH CABLE INSTALLED THROUGH PULL BOX. PROVIDE ELECTRICAL HAZARD SIGN CENTERED ON EXISTING MV PULL BOX. ELECTRICAL HAZARD SIGN SHALL BE POLYESTER SELF-ADHESIVE MANUFACTURED TYPE WITH NOMINAL DIMENSIONS OF 10" H. BY 14" W. AND "DANGER HIGH VOLTAGE 4160 VOLTS" LEGEND. APPLY ELECTRICAL HAZARD SIGN AFTER ALL PAINTING WORK IS COMPLETE. PROTECT EXISTING MV CABLES FROM DAMAGE DURING THE COURSE OF THIS WORK.

S. PROVIDE GALVANIZED STEEL SUPPORT STRUT SPANNING GERT TO FLOOR, ON WHICH TO MOUNT MV PULL BOX EXTENSION. FASTEN STRUT TO GERTS USING 3/8" DIA. GALVANIZED STEEL HARDWARE. ANCHOR STRUT TO FLOOR USING CAST FLOOR MOUNT FITTING RECOMMENDED BY THE STRUT MANUFACTURER, AND 3/8" DIA. GALVANIZED STEEL HARDWARE. FASTEN MV PULL BOX TO STRUT USING 3/8" DIA. GALVANIZED STEEL HARDWARE.

T. EXISTING CONDUITS ROUTED WITHIN CEILING SPACE OF ROOMS BELOW MEZZANINE TO REMAIN INTACT. REUSE THESE CONDUITS TO INSTALL NEW MV FEEDERS.

GRAPHIC SCALE

0' 1' 2' 3' 4' 8' 12'

1/4" = 1'-0"

E-436

SYM.	ZONE	DESCRIPTION	DATE	APPROVED
		REVISIONS		

URS
7650 West Courtney Campbell Causeway
Suite 700
Tampa, Florida 33607
Ph: (813) 286-1711 Fax: (813) 286-6587
Florida Engineering Number: 000002

SIGNATURES		DATE
DRAWN	TRS	9/24/12
CHECKED	GHD	9/24/12
SUBMITTED	GARRET KERLY	9/24/12
ST OF LICENSURE: FL		
LICENSE NO.: 54952		
APPROVED	F. WALKER	9/26/12
	S. MEHTA	9/25/12

NATIONAL AERONAUTICS AND SPACE ADMINISTRATION
JOHN F. KENNEDY SPACE CENTER, NASA
KENNEDY SPACE CENTER, FLORIDA

REVITALIZE MEDIUM VOLTAGE ELECTRICAL DISTRIBUTION SYSTEMS, INDUSTRIAL AND PAYLOAD PROCESSING AREAS
PARTIAL INTERIOR ELEVATION – IACP (M7-407) SOUTH WALL – MODIFIED

FILE NO. | SIZE F | DWG. NO. 79K39135

PCN NO. 98860 | SHEET 68

KSC FORM 1-11A (REV 8/91) (C/G 12/93)

T:\NASA KSC\Task 46\Drawings\E-433 and 434 Elec\E433 PLAN3.dwg 09/20/2012 14:05

NOTICE – WHEN GOVERNMENT DRAWINGS, SPECIFICATIONS, OR OTHER DATA ARE USED FOR ANY PURPOSE OTHER THAN IN CONNECTION WITH A DEFINITELY RELATED GOVERNMENT PROCUREMENT OPERATION, THE UNITED STATES GOVERNMENT THEREBY INCURS NO RESPONSIBILITY NOR ANY OBLIGATION WHATSOEVER; AND THE FACT THAT THE GOVERNMENT MAY HAVE FORMULATED, FURNISHED, OR IN ANY WAY SUPPLIED THE SAID DRAWINGS, SPECIFICATIONS, OR OTHER DATA IS NOT TO BE REGARDED BY IMPLICATION OR OTHERWISE AS IN ANY MANNER LICENSING THE HOLDER OR ANY OTHER PERSON OR CORPORATION, OR CONVEYING ANY RIGHTS OR PERMISSION TO MANUFACTURE, USE OR SELL ANY PATENTED INVENTION THAT MAY IN ANY WAY BE RELATED THERETO.

SECTION – EXISTING CABLE TRAY (1 / E-434)
SCALE: 1" = 1'-0"

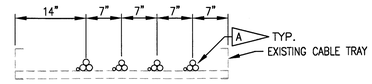

SECTION – EXISTING CABLE TRAY (2 / E-434)
SCALE: 1" = 1'-0"

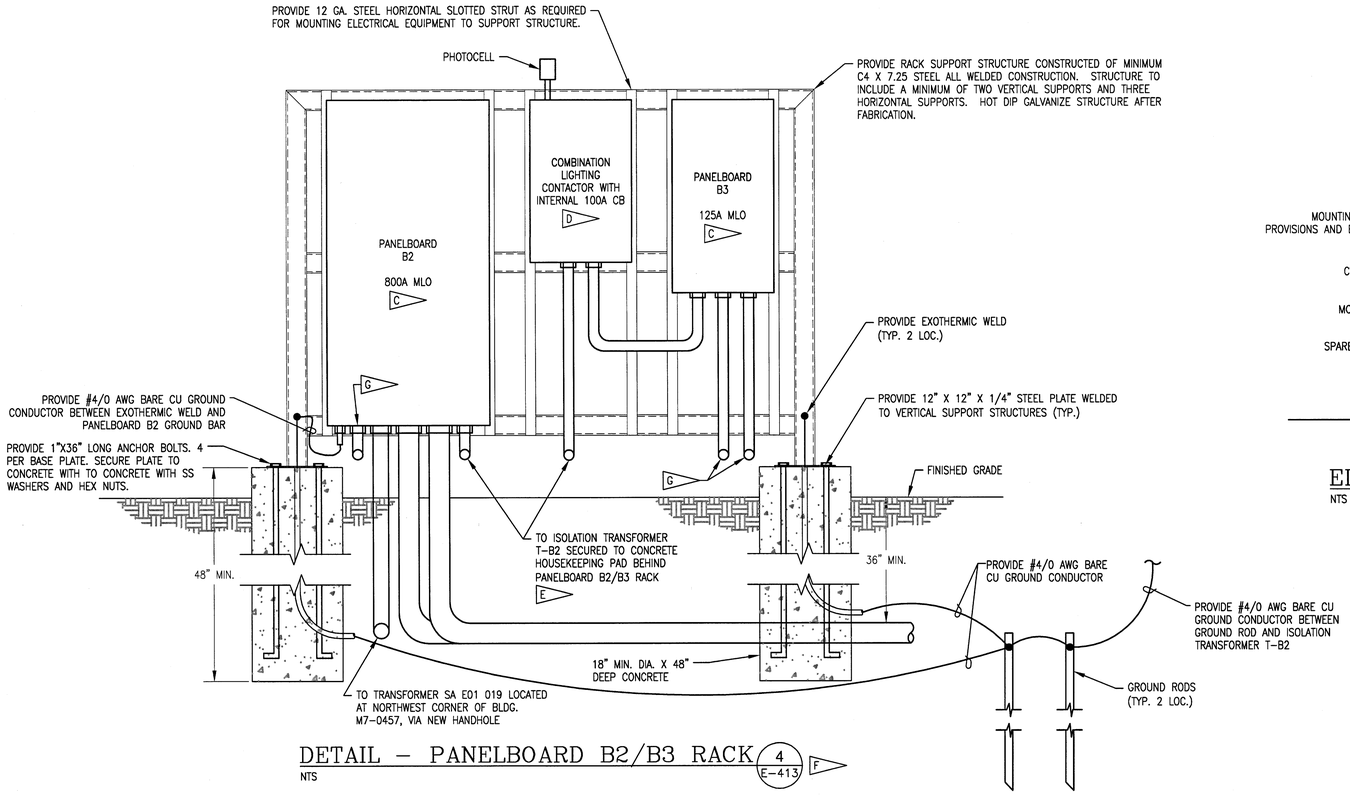

DETAIL – PANELBOARD B2/B3 RACK (4 / E-413) F
NTS

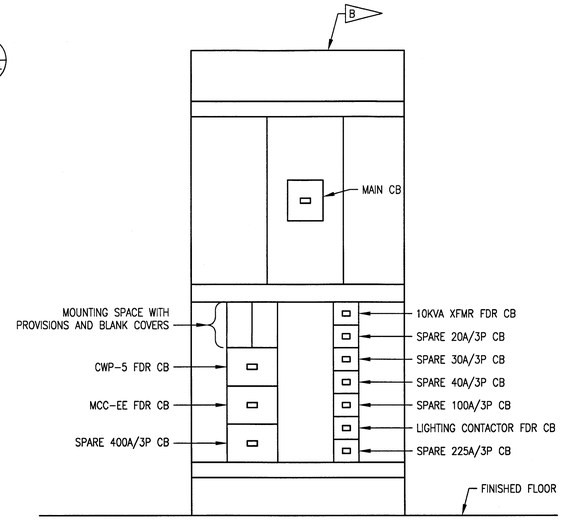

ELEVATION – SWITCHBOARD B1 (3 / E-423)
NTS

SPECIFIC NOTES:

A. BIND FEEDER CABLES TOGETHER IN A TRIPLEX ARRANGEMENT AND SECURE FEEDER (FEEDER CABLES AND ASSOCIATED GROUND WIRE) TO EXISTING CABLE TRAY LADDER RUNGS USING TWO CABLE TIES ON 48" MAX. CENTER-TO-CENTER SPACING FOR THE ENTIRE LENGTH OF THE FEEDER INSTALLED IN THE EXISTING CABLE TRAY. INSTALL CABLE TIES IN A CRISS-CROSS OVERLAPPING CONFIGURATION. EACH CABLE TIE SHALL BE EXTRA HEAVY DUTY BLACK NYLON, WEATHER RESISTANT OUTDOOR TYPE, WITH MINIMUM TENSILE STRENGTH OF 175 LBS.

B. SWITCHBOARD B1 SHALL BE FREE-STANDING WITH NOMINAL DIMENSIONS OF 42" W. BY 91.5" H. BY 24" D., INDIVIDUALLY MOUNTED MAIN CIRCUIT BREAKER IN THE TOP, AND GROUP-MOUNTED DISTRIBUTION SECTION IN THE BOTTOM. REFER TO DRAWING E-641 FOR SWITCHBOARD SCHEDULE.

C. REFER TO DRAWING E-641 FOR PANELBOARD SCHEDULE.

D. PROVIDE 480Y/277V, 3PH., 4 WIRE, AC LIGHTING CONTROL SYSTEM INCLUDING COMBINATION LIGHTING CONTACTOR, PHOTOCELL CONTROL WITH 7 DAY / 24 HOUR TIME CLOCK OVERRIDE CAPABILITY.

E. PROVIDE 2" LFMC CONDUITS ROUTED EXPOSED BETWEEN PANELBOARD, ISOLATION TRANSFORMER T-B2, AND COMBINATION LIGHTING CONTACTOR. MOUNT TRANSFORMER ON 3" HIGH CONCRETE HOUSEKEEPING PAD.

F. REFER TO SINGLE LINE DIAGRAM ON DWG. E-612 FOR ADDITIONAL REQUIREMENTS.

G. PROVIDE CONDUITS ROUTED EXPOSED BETWEEN PANELBOARD AND SS PULL BOX.

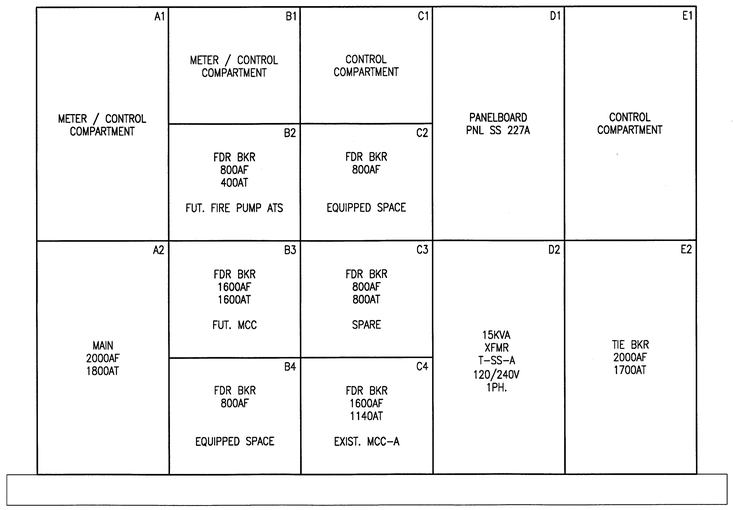

ELEVATION – SWITCHGEAR SS 227A (5 / E-413) F
NTS

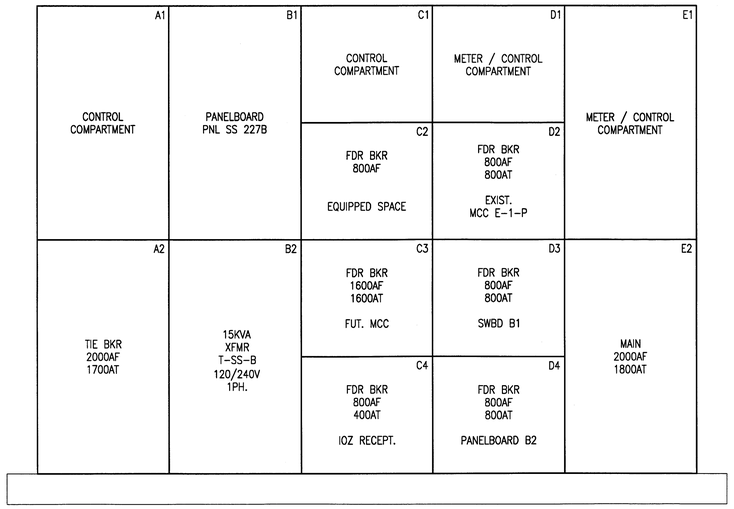

ELEVATION – SWITCHGEAR SS 227B (6 / E-413) F
NTS

GRAPHIC SCALE
0' 3" 6" 9" 1' 2' 3'
1" = 1'-0"

E-501

SYM.	ZONE	DESCRIPTION	DATE	APPROVED
		REVISIONS		

URS
7650 West Courtney Campbell Causeway
Suite 700
Tampa, Florida 33607
Ph: (813) 286-1711 Fax: (813) 286-6587
Florida Engineering Number: 000002

SIGNATURES		DATE
DRAWN	TRS	9/24/12
CHECKED	GSK	9/24/12
SUBMITTED	GLENN H. DAVIS	9/24/12
ST OF LICENSURE: FL		
LICENSE NO.: 66443		
APPROVED	F. WALKER	9/25/12
	S. MEHTA	

NATIONAL AERONAUTICS AND SPACE ADMINISTRATION
JOHN F. KENNEDY SPACE CENTER, NASA
KENNEDY SPACE CENTER, FLORIDA

REVITALIZE MEDIUM VOLTAGE ELECTRICAL DISTRIBUTION SYSTEMS, INDUSTRIAL AND PAYLOAD PROCESSING AREAS

MISCELLANEOUS DETAILS

FILE NO.	SIZE	DWG. NO.
	F	79K39135
PCN NO. 98860		SHEET 69

KSC FORM 1-11A (REV 8/91) (C/G 12/93)

NOTICE – WHEN GOVERNMENT DRAWINGS, SPECIFICATIONS, OR OTHER DATA ARE USED FOR ANY PURPOSE OTHER THAN IN CONNECTION WITH A DEFINITELY RELATED GOVERNMENT PROCUREMENT OPERATION, THE UNITED STATES GOVERNMENT THEREBY INCURS NO RESPONSIBILITY NOR ANY OBLIGATION WHATSOEVER; AND THE FACT THAT THE GOVERNMENT MAY HAVE FORMULATED, FURNISHED, OR IN ANY WAY SUPPLIED THE SAID DRAWINGS, SPECIFICATIONS OR OTHER DATA IS NOT TO BE REGARDED BY IMPLICATION OR OTHERWISE AS IN ANY MANNER LICENSING THE HOLDER OR ANY OTHER PERSON OR CORPORATION, OR CONVEYING ANY RIGHTS OR PERMISSION TO MANUFACTURE, USE, OR SELL ANY PATENTED INVENTION THAT MAY IN ANY WAY BE RELATED THERETO.

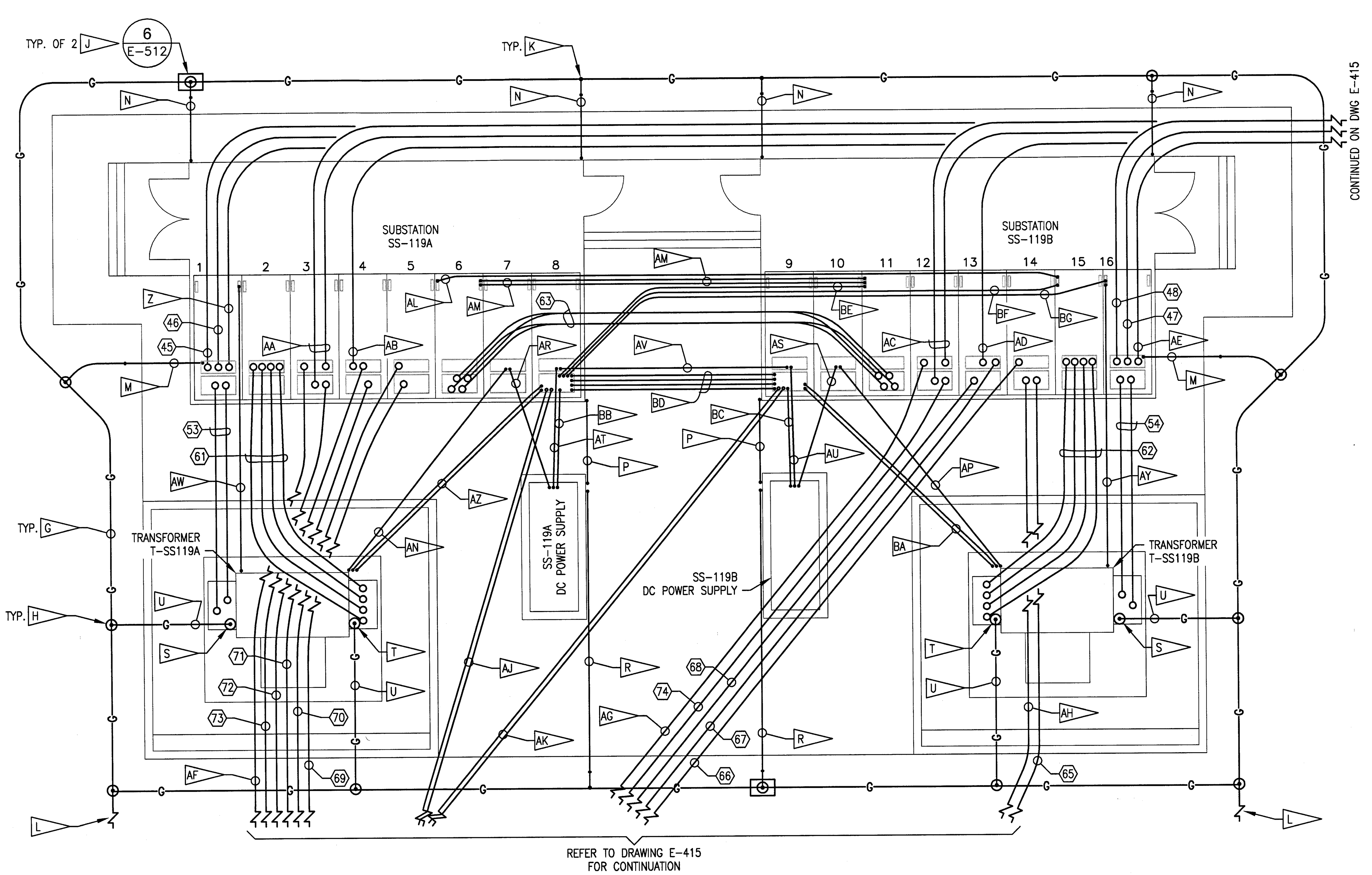

DETAIL – SUBSTATIONS SS-119A AND SS-119B EQUIPMENT PAD (1 / E-415)

SCALE: 1" = 50'-0"

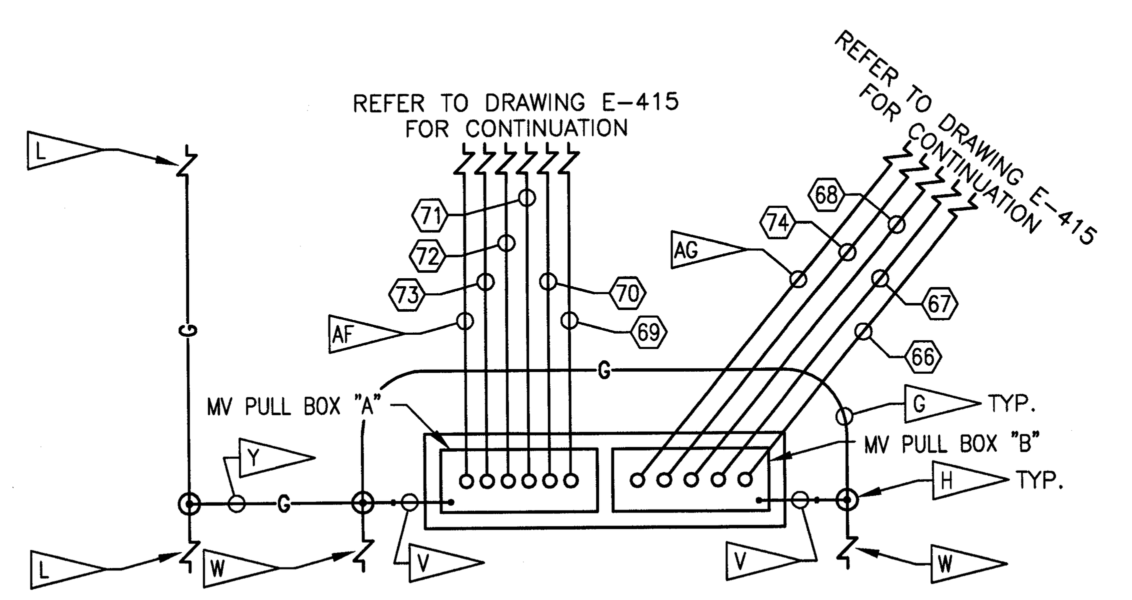

DETAIL – MV PULL BOXES "A" AND "B" EQUIPMENT PAD (2 / E-434)

SCALE: 1" = 50'-0"

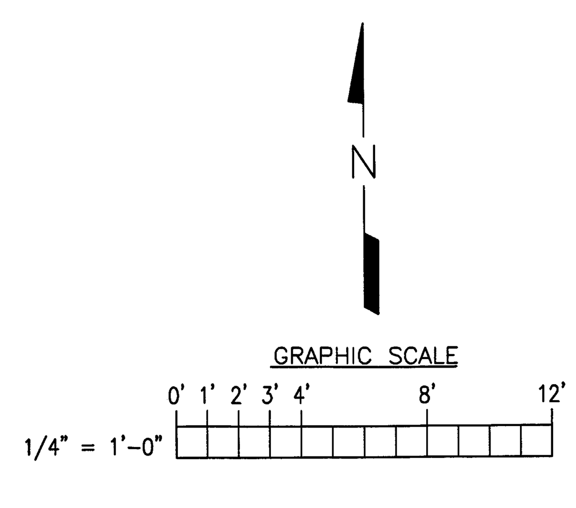

SPECIFIC NOTES:

A. DUE TO DIFFERENCES IN MATERIAL DESIGN FROM MANUFACTURER TO MANUFACTURER, MATERIALS ARE SHOWN ON THIS DRAWING FOR CONCEPT ONLY AND DO NOT NECESSARILY DEPICT THE EXACT PLACEMENT MATERIALS. PROVIDE SCALED AND DIMENSIONED UNDERGROUND CONDUIT AND GROUNDING PLAN SHOP DRAWING SUBMITTAL BASED ON THE ACTUAL EQUIPMENT PROPOSED FOR USE ON THIS PROJECT. SHOP DRAWING SCALE SHALL NOT BE LESS THAN 1/4" = 1'-0". MATERIALS SHOWN ON THIS DRAWING SHALL BE INSTALLED IN ACCORDANCE WITH APPROVED SHOP DRAWING.

B. GROUND RING SHALL BE 4/0 AWG BARE STRANDED COPPER, SHALL BE DIRECT BURIED WITH A MINIMUM OF 30" EARTH COVER, AND SHALL BE LOCATED A MINIMUM OF 24" OUTSIDE OF PERIMETER OF EQUIPMENT.

C. GROUNDING ELECTRODE CONDUCTORS AND BONDING JUMPERS SHALL BE 4/0 AWG BARE STRANDED COPPER.

D. GROUND RODS SHALL BE 3/4" DIA. BY 20'-0" LONG SOLID COPPER. LOCATIONS WHERE A PORTION OF THE TOP OF A GROUND ROD IS TO BE LEFT EXPOSED ABOVE AN EQUIPMENT PAD ARE IDENTIFIED BY SPECIFIC NOTE. WITH THE EXCEPTION OF THESE LOCATIONS, DRIVE EACH GROUND ROD UNTIL ITS TOP IS 30" BELOW GRADE.

E. WITH THE EXCEPTION OF BELOW GRADE CONNECTIONS INSIDE GROUND TEST WELLS, MAKE BELOW GRADE CONNECTIONS BETWEEN GROUND RING, GROUND RODS, GROUNDING ELECTRODE CONDUCTORS, AND BONDING JUMPERS VIA THE EXOTHERMIC WELDING PROCESS. INSIDE GROUND TEST WELLS, MAKE BELOW GRADE CONNECTIONS BETWEEN GROUND RING, GROUND RODS, GROUNDING ELECTRODE CONDUCTORS, AND BONDING JUMPERS USING BOLTED MECHANICAL CONNECTORS.

F. REFER TO DRAWING E-004 FOR MODIFIED CABLE SCHEDULE.

G – PROVIDE GROUND RING.

H – PROVIDE GROUND ROD. BOND GROUND ROD TO GROUND RING OR BONDING JUMPER AS APPLICABLE.

J – PROVIDE EXPOSED GROUND ROD WITHIN GROUND TEST WELL. BOND GROUND ROD TO GROUND RING OR BONDING JUMPER AS APPLICABLE.

K – BOND.

L – PROVIDE BONDING JUMPER BETWEEN NEW SUBSTATIONS GROUND RING AND EXISTING IACP M7-407 GROUND RING. BOND BONDING JUMPER TO GROUND RING AT EACH END.

M – PROVIDE GROUNDING ELECTRODE CONDUCTOR IN 1 1/2" SCH. 40 PVC CONDUIT. BOND GROUNDING ELECTRODE CONDUCTOR TO SUBSTATION GROUND BUS AND TO GROUND RING.

N – PROVIDE BONDING JUMPER IN 1 1/2" SCH. 40 PVC CONDUIT. BOND BONDING JUMPER TO SUBSTATION STEEL SUBSTRUCTURE AND TO GROUND RING.

P – PROVIDE BONDING JUMPER IN 1 1/2" SCH. 40 PVC CONDUIT. BOND BONDING JUMPER TO SUBSTATION STEEL SUBSTRUCTURE AND DC POWER SUPPLY ENCLOSURE STEEL SUBSTRUCTURE.

R – PROVIDE BONDING JUMPER IN 1 1/2" SCH. 40 PVC CONDUIT. BOND BONDING JUMPER TO DC POWER SUPPLY ENCLOSURE STEEL SUBSTRUCTURE AND TO GROUND RING.

S – PROVIDE GROUND ROD. LOCATE GROUND ROD BELOW TRANSFORMER PRIMARY TERMINAL CHAMBER. LEAVE 8" OF GROUND ROD EXPOSED ABOVE TRANSFORMER RAISED EQUIPMENT PAD. PROVIDE BONDING JUMPER FROM GROUND ROD TO TRANSFORMER GROUND PAD. BOND BONDING JUMPER TO GROUND ROD VIA THE EXOTHERMIC WELDING PROCESS.

T – PROVIDE GROUND ROD. LOCATE GROUND ROD BELOW TRANSFORMER SECONDARY TERMINAL CHAMBER. LEAVE 8" OF GROUND ROD EXPOSED ABOVE TRANSFORMER RAISED EQUIPMENT PAD. PROVIDE BONDING JUMPERS FROM GROUND ROD TO TRANSFORMER GROUND PAD AND NEUTRAL GROUNDING RESISTOR (NGR). BOND BONDING JUMPERS TO GROUND ROD VIA THE EXOTHERMIC WELDING PROCESS.

U – PROVIDE BONDING JUMPER DIRECT BURIED WITH A MINIMUM OF 30" EARTH COVER BETWEEN GROUND RODS. BOND BONDING JUMPER TO GROUND ROD AT EACH END.

V – PROVIDE GROUNDING ELECTRODE CONDUCTOR IN 1 1/2" SCH. 40 PVC CONDUIT. BOND GROUNDING ELECTRODE CONDUCTOR TO MV PULL BOX AND TO GROUND RING.

W – PROVIDE BONDING JUMPER BETWEEN NEW MV PULL BOXES GROUND RING AND EXISTING IACP M7-407 GROUND RING. BOND BONDING JUMPER TO GROUND RING AT EACH END.

Y – PROVIDE BONDING JUMPER BETWEEN NEW MV PULL BOXES GROUND RING AND NEW SUBSTATIONS BONDING JUMPER. BOND BONDING JUMPER TO GROUND RING/BONDING JUMPER AT EACH END.

Z – PROVIDE 5" SCH. 40 PVC CONDUIT, EMPTY/SPARE WITH PULL ROPE, BETWEEN MANHOLE MHP-69B AND SUBSTATION SS-119A SECTION 1 BREAKER LINE-SIDE TERMINALS.

AA – PROVIDE TWO 5" SCH. 40 PVC CONDUITS, EMPTY/SPARE WITH PULL ROPE, BETWEEN MANHOLE MHP-69B AND SUBSTATION SS-119A SECTION 3; ONE EACH TO COMPARTMENTS 3A AND 3B.

AB – PROVIDE 5" SCH. 40 PVC CONDUIT, EMPTY/SPARE WITH PULL ROPE, BETWEEN MANHOLE MHP-69B AND SUBSTATION SS-119A COMPARTMENT 4B.

AC – PROVIDE TWO 5" SCH. 40 PVC CONDUITS, EMPTY/SPARE WITH PULL ROPE, BETWEEN MANHOLE MHP-69B AND SUBSTATION SS-119B SECTION 12; ONE EACH TO COMPARTMENTS 12A AND 12B.

AD – PROVIDE 5" SCH. 40 PVC CONDUIT, EMPTY/SPARE WITH PULL ROPE, BETWEEN SUBSTATION MANHOLE MHP-69B AND SS-119B COMPARTMENT 13B.

AE – PROVIDE 5" SCH. 40 PVC CONDUIT, EMPTY/SPARE WITH PULL ROPE, BETWEEN SUBSTATION MANHOLE MHP-69B AND SS-119B SECTION 16 BREAKER LINE-SIDE TERMINALS.

AF – PROVIDE 5" SCH. 40 PVC CONDUIT, EMPTY/SPARE WITH PULL ROPE, BETWEEN SUBSTATION SS-119A COMPARTMENT 3B AND MV PULL BOX "A". REFER TO DRAWING E-415 FOR CONTINUATION.

AG – PROVIDE 5" SCH. 40 PVC CONDUIT, EMPTY/SPARE WITH PULL ROPE, BETWEEN SUBSTATION SS-119B COMPARTMENT 12B AND MV PULL BOX "B". REFER TO DRAWING E-415 FOR CONTINUATION.

AH – PROVIDE 5" SCH. 40 PVC CONDUIT, EMPTY/SPARE WITH PULL ROPE, BETWEEN SUBSTATION SS-119B COMPARTMENT 14B AND EXISTING PAD MOUNT TRANSFORMER SERVING MCC-D7.

AJ – PROVIDE TWO 2" SCH. 40 PVC CONDUITS, ONE ACTIVE AND ONE EMPTY/SPARE WITH PULL ROPE, FOR COMMUNICATIONS CABLING BETWEEN COMMUNICATIONS PULL BOX AND SUBSTATION SS-119A COMPARTMENT 8A. REFER TO DRAWING E-415 FOR CONTINUATION.

AK – PROVIDE TWO 2" SCH. 40 PVC CONDUITS, ONE ACTIVE AND ONE EMPTY/SPARE WITH PULL ROPE, FOR COMMUNICATIONS CABLING BETWEEN COMMUNICATIONS PULL BOX AND SUBSTATION SS-119B COMPARTMENT 9A. REFER TO DRAWING E-415 FOR CONTINUATION.

SPECIFIC NOTES CONT...

AL – PROVIDE 1 1/2" SCH. 40 PVC CONDUIT BETWEEN SS-119A COMPARTMENT 6A AND SS-119B COMPARTMENT 15A FOR EIA-232 MIRRIORED BITS SERIAL COMMUNICATIONS VIA FIBER OPTIC CABLE. REFER SYSTEM ARCHITECTURE DIAGRAMS ON DRAWINGS E-633 AND -634 FOR CABLING REQUIREMENTS.

AM – PROVIDE TWO 1" SCH. 40 PVC CONDUIT BETWEEN SS-119A COMPARTMENT 6A AND SS-119B COMPARTMENT 11A FOR TRIP SIGNAL CONTROL WIRING. REFER TO ONE-LINE DIAGRAMS ON DRAWING E-622 AND -623 FOR WIRING REQUIREMENTS.

AN – PROVIDE 1 1/2" SCH. 40 PVC CONDUIT BETWEEN SS-119A COMPARTMENT 7B AND TRANSFORMER T-SS119A FOR COOLING FANS POWER WIRING. REFER TO ONE-LINE DIAGRAM ON DRAWING E-623 FOR WIRING REQUIREMENTS. STUB CONDUIT UP ADJACENT TO TRANSFORMER, BELOW COOLING FANS CONTROL CABINET. TRANSITION PVC CONDUIT TO PVC COATED GRS CONDUIT AT LAST 90 DEGREE ELBOW BEFORE RISING UP AND EMERGING FROM GRADE.

AP – PROVIDE 1 1/2" SCH. 40 PVC CONDUIT BETWEEN SS-119B COMPARTMENT 10B AND TRANSFORMER T-SS119B FOR COOLING FANS POWER WIRING. REFER TO ONE-LINE DIAGRAM ON DRAWING E-622 FOR WIRING REQUIREMENTS. STUB CONDUIT UP ADJACENT TO TRANSFORMER, BELOW COOLING FANS CONTROL CABINET. TRANSITION PVC CONDUIT TO PVC COATED GRS CONDUIT AT LAST 90 DEGREE ELBOW BEFORE RISING UP AND EMERGING FROM GRADE.

AR – PROVIDE 1 1/2" SCH. 40 PVC CONDUIT BETWEEN SS-119A COMPARTMENT 7B AND SS-119A DC POWER SUPPLY FOR BATTERY CHARGER POWER WIRING. STUB CONDUIT UP DC POWER SUPPLY CABINET. REFER TO ONE-LINE DIAGRAM ON DRAWING E-623 FOR WIRING REQUIREMENTS.

AS – PROVIDE 1 1/2" SCH. 40 PVC CONDUIT BETWEEN SS-119B COMPARTMENT 10B AND SS-119B DC POWER SUPPLY FOR BATTERY CHARGER POWER WIRING. STUB CONDUIT UP BELOW DC POWER SUPPLY CABINET. REFER TO ONE-LINE DIAGRAM ON DRAWING E-622 FOR WIRING REQUIREMENTS.

AT – PROVIDE 1 1/2" SCH. 40 PVC CONDUIT BETWEEN SS-119A COMPARTMENT 8B AND SS-119A DC POWER SUPPLY FOR DC POWER WIRING. STUB CONDUIT UP BELOW DC POWER SUPPLY CABINET. REFER TO ONE-LINE DIAGRAM ON DRAWING E-623 FOR WIRING REQUIREMENTS.

AU – PROVIDE 1 1/2" SCH. 40 PVC CONDUIT BETWEEN SS-119B COMPARTMENT 9B AND SS-119B DC POWER SUPPLY FOR DC POWER WIRING. STUB CONDUIT UP BELOW DC POWER SUPPLY CABINET. REFER TO ONE-LINE DIAGRAM ON DRAWING E-622 FOR WIRING REQUIREMENTS.

AV – PROVIDE 1 1/2" SCH. 40 PVC CONDUIT BETWEEN SS-119A COMPARTMENT 8B AND SS-119B COMPARTMENT 9B FOR DC BUS TIE POWER WIRING. REFER TO ONE-LINE DIAGRAMS ON DRAWING E-622 AND -623 FOR WIRING REQUIREMENTS.

AW – PROVIDE 1" SCH. 40 PVC CONDUIT BETWEEN SS-119A COMPARTMENT 1A AND T-SS119A FOR GROUND CT WIRING. STUB CONDUIT UP ADJACENT TO TRANSFORMER AND ROUTE EXPOSED UP TO GROUND CT IN NEUTRAL GROUND RESISTOR (NGR) CABINET. TRANSITION PVC CONDUIT TO PVC COATED GRS CONDUIT AT LAST 90 DEGREE ELBOW BEFORE RISING UP AND EMERGING FROM GRADE.

AY – PROVIDE 1" SCH. 40 PVC CONDUIT BETWEEN SS-119B COMPARTMENT 16A AND T-SS119B FOR GROUND CT WIRING. STUB CONDUIT UP ADJACENT TO TRANSFORMER AND ROUTE EXPOSED UP TO GROUND CT IN NEUTRAL GROUND RESISTOR (NGR) CABINET. TRANSITION PVC CONDUIT TO PVC COATED GRS CONDUIT AT LAST 90 DEGREE ELBOW BEFORE RISING UP AND EMERGING FROM GRADE.

AZ – PROVIDE TWO 1" SCH. 40 PVC CONDUITS, ONE ACTIVE AND ONE EMPTY/SPARE WITH PULL ROPE, BETWEEN SS-119A COMPARTMENT 8A AND T-SS119A FOR TRANSFORMER TELEMETRY WIRING. STUB CONDUIT UP ADJACENT TO TRANSFORMER AND ROUTE EXPOSED TO TRANSFORMER INSTRUMENTATION. TRANSITION PVC CONDUIT TO PVC COATED GRS CONDUIT AT LAST 90 DEGREE ELBOW BEFORE RISING UP AND EMERGING FROM GRADE.

BA – PROVIDE TWO 1" SCH. 40 PVC CONDUITS, ONE ACTIVE AND ONE EMPTY/SPARE WITH PULL ROPE, BETWEEN SS-119B COMPARTMENT 9A AND T-SS119B FOR TRANSFORMER TELEMETRY WIRING. STUB CONDUIT UP ADJACENT TO TRANSFORMER AND ROUTE EXPOSED TO TRANSFORMER INSTRUMENTATION. TRANSITION PVC CONDUIT TO PVC COATED GRS CONDUIT AT LAST 90 DEGREE ELBOW BEFORE RISING UP AND EMERGING FROM GRADE.

BB – PROVIDE 1" SCH. 40 PVC CONDUIT BETWEEN SS-119A COMPARTMENT 8A AND SS-119A DC POWER SUPPLY FOR TELEMETRY WIRING. STUB CONDUIT UP BELOW DC POWER SUPPLY CABINET. REFER TO PROTECTIVE RELAY SYSTEM ARCHITECTURE DIAGRAM ON DRAWING E-633 FOR TELEMETRY REQUIREMENTS.

BC – PROVIDE 1" SCH. 40 PVC CONDUIT BETWEEN SS-119B COMPARTMENT 9A AND SS-119B DC POWER SUPPLY FOR TELEMETRY WIRING. STUB CONDUIT UP BELOW DC POWER SUPPLY CABINET. REFER TO PROTECTIVE RELAY SYSTEM ARCHITECTURE DIAGRAM ON DRAWING E-634 FOR TELEMETRY REQUIREMENTS.

BD – PROVIDE FOUR 1 1/2" SCH. 40 PVC CONDUITS, EMPTY/SPARE WITH PULL ROPE, BETWEEN SS-119A COMPARTMENT 8A AND SS-119B COMPARTMENT 9A FOR FUTURE USE BY THE GOVERNMENT.

BE – PROVIDE 1 1/2" SCH. 40 PVC CONDUIT BETWEEN SS-119A COMPARTMENT 8A AND SS-119B COMPARTMENT 11A FOR EIA-232 WITH IRIG-B SERIAL COMMUNICATIONS VIA FIBER OPTIC CABLE. REFER SYSTEM ARCHITECTURE DIAGRAMS ON DRAWINGS E-633 AND -634 FOR CABLING REQUIREMENTS.

BF – PROVIDE 1 1/2" SCH. 40 PVC CONDUIT BETWEEN SS-119A COMPARTMENT 8A AND SS-119B COMPARTMENT 15A FOR EIA-232 WITH IRIG-B SERIAL COMMUNICATIONS VIA FIBER OPTIC CABLE. REFER SYSTEM ARCHITECTURE DIAGRAMS ON DRAWINGS E-633 AND -634 FOR CABLING REQUIREMENTS.

BG – PROVIDE 1 1/2" SCH. 40 PVC CONDUIT BETWEEN SS-119A COMPARTMENT 8A AND SS-119B COMPARTMENT 16A FOR EIA-232 WITH IRIG-B SERIAL COMMUNICATIONS VIA FIBER OPTIC CABLE. REFER SYSTEM ARCHITECTURE DIAGRAMS ON DRAWINGS E-633 AND -634 FOR CABLING REQUIREMENTS.

SYM.	ZONE	DESCRIPTION	DATE	APPROVED
		REVISIONS		

URS
7650 West Courtney Campbell Causeway
Suite 700
Tampa, Florida 33607
Ph: (813) 286-1711 Fax: (813) 286-6587
Florida Engineering Number: 000002

SIGNATURES	DATE
DRAWN TRS	9/24/12
CHECKED GHD	9/24/12
SUBMITTED (signature) GARRET KERLY	9/24/12
ST OF LICENSURE: FL	
LICENSE NO.: 54952	
APPROVED (signature) F. WALKER	9/24/12
(signature) S. MEHTA	9/25/12

NATIONAL AERONAUTICS AND SPACE ADMINISTRATION
JOHN F. KENNEDY SPACE CENTER, NASA
KENNEDY SPACE CENTER, FLORIDA

REVITALIZE MEDIUM VOLTAGE ELECTRICAL DISTRIBUTION SYSTEMS, INDUSTRIAL AND PAYLOAD PROCESSING AREAS
DETAILS – SUBSTATIONS SS 119A AND SS 119B EQUIPMENT PAD

FILE NO.	SIZE	DWG. NO.
	F	79K39135

PCN NO. 98860 | SHEET 70

E-502

T:\NASA KSC\Task No. 1\Drawings\E-502 DETAILS – SS 119A AND SS 119B EQUIP PAD.dwg 09/20/2012 14:05

NOTICE – WHEN GOVERNMENT DRAWINGS, SPECIFICATIONS, OR OTHER DATA ARE USED FOR ANY PURPOSE OTHER THAN IN CONNECTION WITH A DEFINITELY RELATED GOVERNMENT PROCUREMENT OPERATION, THE UNITED STATES GOVERNMENT THEREBY INCURS NO RESPONSIBILITY NOR ANY OBLIGATION WHATSOEVER; AND THE FACT THAT THE GOVERNMENT MAY HAVE FORMULATED, FURNISHED, OR IN ANY WAY SUPPLIED THE SAID DRAWINGS, SPECIFICATIONS OR OTHER DATA IS NOT TO BE REGARDED BY IMPLICATION OR OTHERWISE AS IN ANY MANNER LICENSING THE HOLDER OR ANY OTHER PERSON OR CORPORATION, OR CONVEYING ANY RIGHTS OR PERMISSION TO MANUFACTURE, USE, OR SELL ANY PATENTED INVENTION THAT MAY IN ANY WAY BE RELATED THERETO.

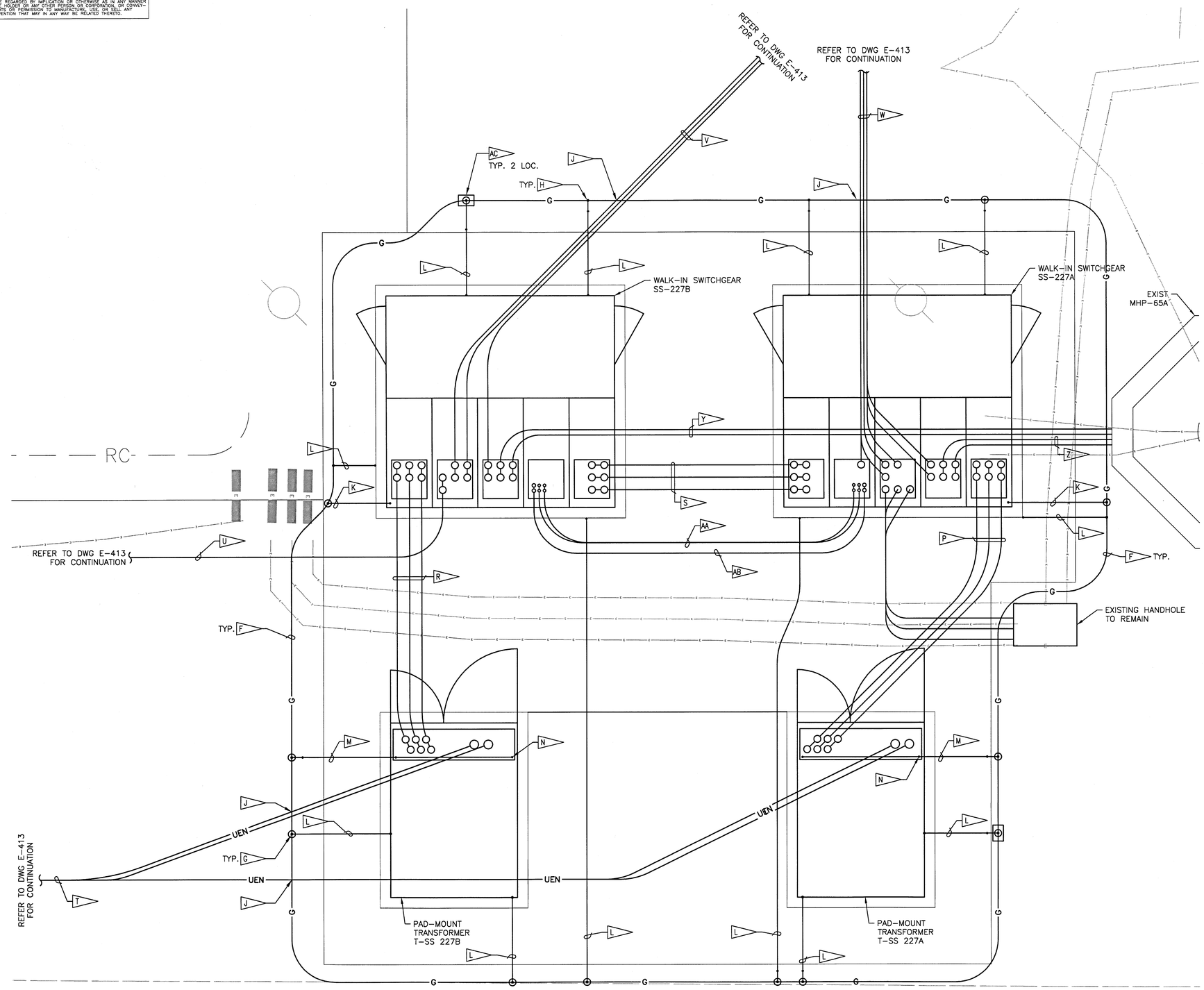

ENLARGED PLAN – MODIFIED

(1 / E-413)

SCALE 1" = 2' – 0"

GRAPHIC SCALE

0' 2' 4' 6'

1" = 2'-0"

N

SPECIFIC NOTES:

A. ALL MATERIALS SHOWN ON THIS DRAWINGS SHALL BE INSTALLED IN ACCORDANCE WITH APPROVED SHOP DRAWINGS. PROVIDE SCALED AND DIMENSIONED UNDERGROUND CONDUIT AND GROUNDING PLAN SHOP DRAWING SUBMITTAL BASED ON THE ACTUAL EQUIPMENT PROPOSED FOR USE ON THIS PROJECT. SHOP DRAWING SCALE SHALL NOT BE LESS THAN 1/4" = 1'-0". MATERIALS SHOWN ON THIS DRAWING SHALL BE INSTALLED IN ACCORDANCE WITH APPROVED SHOP DRAWING.

B. GROUND RING SHALL BE #4/0 AWG BARE STRANDED COPPER, SHALL BE DIRECT BURIED WITH A MINIMUM OF 30" EARTH COVER, AND SHALL BE LOCATED A MINIMUM OF 24" OUTSIDE OF PERIMETER OF EQUIPMENT. WHERE NEW CONCRETE PAD IS ADJACENT TO EXISTING CONCRETE PAD, LOCATE GROUND RING CONDUCTOR UNDER NEW CONCRETE PAD, ALL OTHER LOCATIONS LOCATE THE GROUND RING CONDUCTOR OUTSIDE LIMITS OF NEW CONCRETE PAD.

C. GROUNDING ELECTRODE CONDUCTORS AND BONDING JUMPERS SHALL BE #4/0 BARE STRANDED COPPER, UNLESS OTHERWISE NOTED.

D. GROUND RODS SHALL BE 3/4" DIA. BY 20'-0" LONG SOLID COPPER. EXCEPT AS OTHERWISE NOTED, DRIVE EACH GROUND ROD UNTIL ITS TOP IS 30" BELOW GRADE

E. EXCEPT AT GROUND TEST WELLS, MAKE ALL BELOW GRADE CONNECTIONS BETWEEN GROUND RING, GROUND RODS, GROUNDING ELECTRODE CONDUCTORS, AND BONDING JUMPERS VIA THE EXOTHERMIC WELDING PROCESS.

F PROVIDE GROUND RING.

G PROVIDE GROUND ROD. BOND GROUND ROD TO GROUND RING AND BONDING JUMPER AS APPLICABLE.

H BOND.

J PROVIDE BONDING JUMPER BETWEEN SUBSTATIONS GROUND RING AND DUCT BANK GROUNDING CONDUCTOR.

K PROVIDE GROUNDING ELECTRODE CONDUCTOR (GEC) IN 1 1/2" SCH. 40 PVC CONDUIT. STUB CONDUIT OUT 12" BEYOND PERIMETER OF EQUIPMENT PAD. BOND GEC TO SWITCHGEAR NEUTRAL BUS AND GROUND RING.

L PROVIDE BONDING JUMPER IN 1" SCH. 40 PVC CONDUIT. STUB CONDUIT OUT 12" BEYOND PERIMETER OF EQUIPMENT PAD. BOND SUBSTATION STRUCTURES AND TRANSFORMER TANKS TO THE GROUND RING.

M PROVIDE GROUNDING ELECTRODE CONDUCTOR (GEC) IN 1 1/2" SCH. 40 PVC CONDUIT. STUB CONDUIT OUT 12" BEYOND PERIMETER OF EQUIPMENT PAD. BOND GEC TO TRANSFORMER NEUTRAL, CABLE COMPARTMENT GROUNDS AND TO GROUND RING.

N BOND MV CABLE TERMINATION AND LIGHTING ARRESTER GROUNDS TO THE TANK AND EARTH COUNTERPOISE GROUND.

P PROVIDE (6) 4" SCH. 40 PVC IN DUCT BANK BETWEEN TRANSFORMER T-SS227A AND SWITCHGEAR SS-227A.

R PROVIDE (6) 4" SCH. 40 PVC IN DUCT BANK BETWEEN TRANSFORMER T-SS227B AND SWITCHGEAR SS-227B.

S PROVIDE (6) 4" SCH. 40 PVC IN DUCT BANK BETWEEN SWITCHGEAR SS-227A AND SWITCHGEAR SS-227B.

T PROVIDE (4) 5" SCH. 40 PVC IN DUCT BANK BETWEEN VFI-63/65 VAULT AND T-SS227A AND T-SS227B.

U PROVIDE (2) 4" SCH. 40 PVC IN DUCT BANK BETWEEN SS-227B AND PANELBOARD B2.

V PROVIDE (6) 4" SCH. 40 PVC IN DUCT BANK BETWEEN SWITCHGEAR SS-227B AND MHP-73.

W PROVIDE (6) 4" SCH. 40 PVC IN DUCT BANK BETWEEN SWITCHGEAR SS-227A AND EXIST MHP-73.

Y PROVIDE (4) 4" SCH. 40 PVC IN DUCT BANK BETWEEN SWITCHGEAR SS-227B AND EXISTING MANHOLE MHP-65A.

Z PROVIDE (4) 4" SCH. 40 PVC IN DUCT BANK BETWEEN SWITCHGEAR SS-227A AND EXISTING MANHOLE MHP-65A.

AA PROVIDE (4) 1-1/2" SCH. 40 PVC CONDUIT BETWEEN SWITCHGEAR SS-227A AND SS-227B FOR CONTROL CABLING.

AB PROVIDE (2) 2" SCH. 40 PVC CONDUIT BETWEEN SWITCHGEAR SS-227A AND SS-227B FOR 120/240V POWER.

AC GROUND INSPECTION/TEST WELL REFER TO DETAIL 6 ON DWG. E-512 FOR ADDITIONAL REQUIREMENTS.

AD. REFER TO DWG. E-413 FOR DUCT BANK CALL OUTS AND DWGS. E-515 AND E-516 FOR DUCT BANK SECTIONS.

SYM.	ZONE	DESCRIPTION	DATE	APPROVED
		REVISIONS		

URS
7650 West Courtney Campbell Causeway
Suite 700
Tampa, Florida 33607
Ph: (813) 286-1711 Fax: (813) 286-6587
Florida Engineering Number: 000002

SIGNATURES		DATE
DRAWN	TRS	9/24/12
CHECKED	GSK	9/24/12
SUBMITTED	Glenn H. Davis GLENN H. DAVIS	9/24/12
ST OF LICENSURE: FL		
LICENSE NO.: 66443		
APPROVED	F. Walker F. WALKER	9/24/12
	Sunil Mehta S. MEHTA	9/25/12

NATIONAL AERONAUTICS AND SPACE ADMINISTRATION
JOHN F. KENNEDY SPACE CENTER, NASA
KENNEDY SPACE CENTER, FLORIDA

REVITALIZE MEDIUM VOLTAGE ELECTRICAL DISTRIBUTION SYSTEMS, INDUSTRIAL AND PAYLOAD PROCESSING AREAS
DETAILS – SUBSTATIONS SS 227A AND 227B EQUIPMENT PAD

FILE NO. | SIZE F | DWG. NO. 79K39135

PCN NO. 98860 | SHEET 71

E-503

I:\MGA FSD\Task No. 1\Drawings\E-503 DETAILS - SUBSTATION SS A AND B.dwg 09/25/2012 14:05

KSC FORM 1-11A (REV 6/91) (C/G 12/93)

NOTICE – WHEN GOVERNMENT DRAWINGS, SPECIFICATIONS, OR OTHER DATA ARE USED FOR ANY PURPOSE OTHER THAN IN CONNECTION WITH A DEFINITELY RELATED GOVERNMENT PROCUREMENT OPERATION, THE UNITED STATES GOVERNMENT THEREBY INCURS NO RESPONSIBILITY NOR ANY OBLIGATION WHATSOEVER; AND THE FACT THAT THE GOVERNMENT MAY HAVE FORMULATED, FURNISHED, OR IN ANY WAY SUPPLIED THE SAID DRAWINGS, SPECIFICATIONS, OR OTHER DATA IS NOT TO BE REGARDED, BY IMPLICATION OR OTHERWISE AS IN ANY MANNER LICENSING THE HOLDER OR ANY OTHER PERSON OR CORPORATION, OR CONVEYING ANY RIGHTS OR PERMISSION TO MANUFACTURE, USE, OR SELL ANY PATENTED INVENTION THAT MAY IN ANY WAY BE RELATED THERETO.

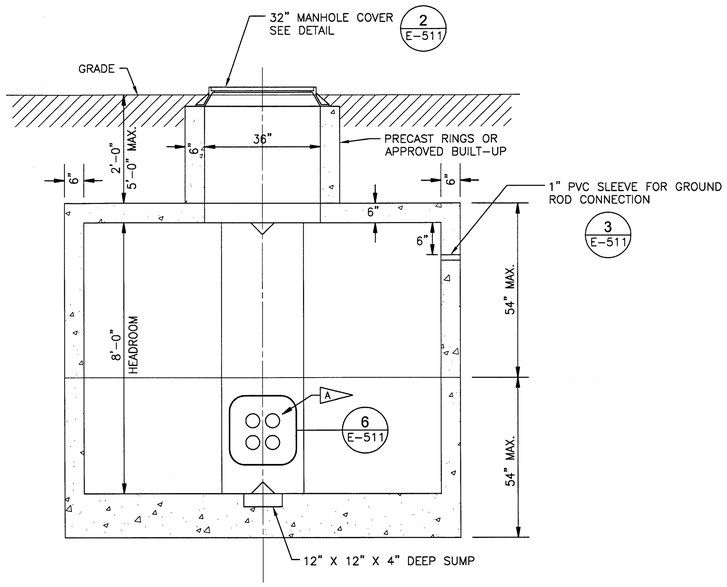

SECTION VIEW

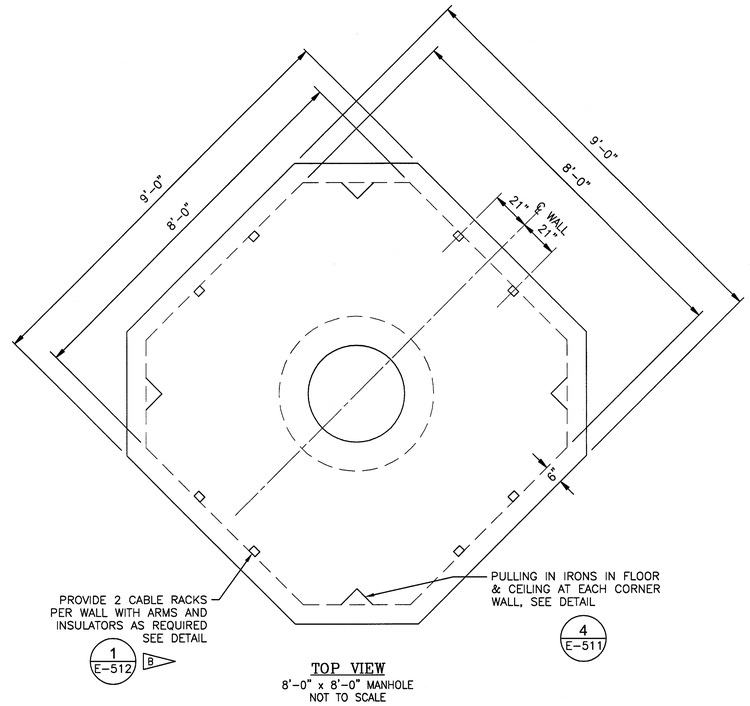

TOP VIEW
8'-0" x 8'-0" MANHOLE
NOT TO SCALE

PRECAST OCTAGONAL MANHOLE (1 / E-102, E-104, E-415)

NOT TO SCALE

MANHOLE CONDUIT ENTRANCE SCHEDULE				
MANHOLE	NORTH	EAST	SOUTH	WEST
MHP-39A		4-5"	4-5"	
MHP-69A	6-5"		6-5"	
MHP-69B		6-5"		12-5"

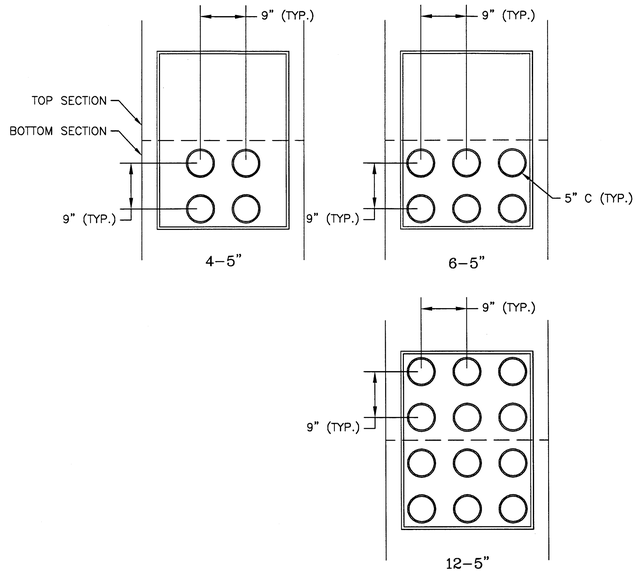

END BELL ARRANGEMENTS (6 / E-511)

NOT TO SCALE

SPECIFIC NOTES:

A — DUCT BANK ENTRANCE TO MANHOLE. REFER TO DETAILS 3 AND 4 ON DWG. E-512 FOR ADDITIONAL REQUIREMENTS.

B — IN NEW MANHOLES, CABLES FOR DIFFERENT FEEDER CIRCUITS SHALL BE ROUTED ALONG OPPOSITE SIDES OF THE MANHOLE.

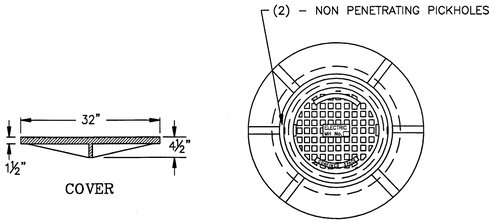

COVER

COVER AND FRAME ASSEMBLY

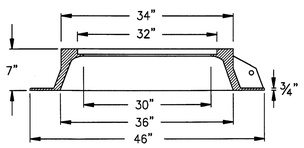

FROM

NOTES:

1. MATERIAL – ASTM-A48 CLASS 30B GRAY IRON

MANHOLE COVER AND FRAME ASSEMBLY (2 / E-511)

NOT TO SCALE

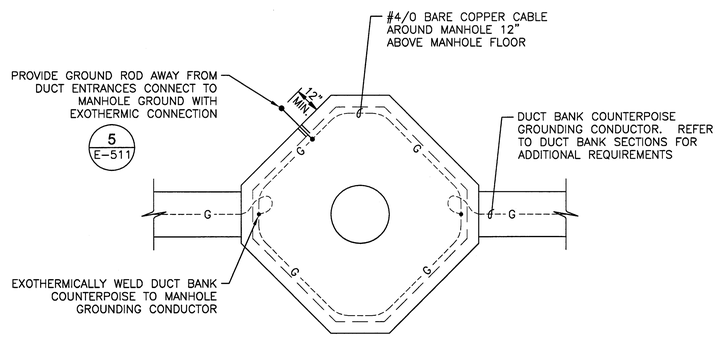

MANHOLE GROUNDING DETAIL (3 / E-511)

NOT TO SCALE

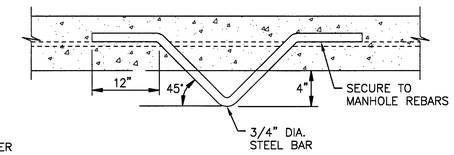

PULLING-IN IRON DETAIL (4 / E-511)

NOT TO SCALE

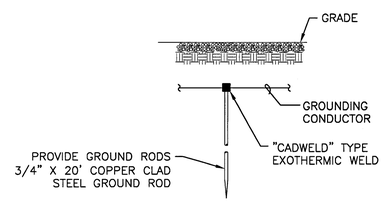

GROUND ROD DETAIL (5 / E-511, E-513, E-514)

NOT TO SCALE

SYM.	ZONE	DESCRIPTION	DATE	APPROVED
		REVISIONS		

URS
7650 West Courtney Campbell Causeway
Suite 700
Tampa, Florida 33607
Ph: (813) 286-1711 Fax: (813) 286-6587
Florida Engineering Number: 000002

SIGNATURES		DATE
DRAWN	TRS	9/24/12
CHECKED	GSK	9/24/12
SUBMITTED	GLENN H. DAVIS	9/24/12
ST OF LICENSURE: FL		
LICENSE NO.: 66443		
APPROVED	F. WALKER	9/24/12
	S. MEHTA	9/25/12

NATIONAL AERONAUTICS AND SPACE ADMINISTRATION
JOHN F. KENNEDY SPACE CENTER, NASA
KENNEDY SPACE CENTER, FLORIDA

REVITALIZE MEDIUM VOLTAGE
ELECTRICAL DISTRIBUTION SYSTEMS,
INDUSTRIAL AND PAYLOAD PROCESSING AREAS

MANHOLE DETAILS

E-511

FILE NO.	SIZE	DWG. NO.
	F	79K39135
PCN NO. 98860		SHEET 72

T:\NASA KSC\Vaa Inc. \Drawings\E-511 MANHOLE DETAILS.dwg 09/20/2012 14:05
KSC FORM 1-11A (REV 6/91) (C/G 8/93)

NOTICE – WHEN GOVERNMENT DRAWINGS, SPECIFICATIONS, OR OTHER DATA ARE USED FOR ANY PURPOSE OTHER THAN IN CONNECTION WITH A DEFINITELY RELATED GOVERNMENT PROCUREMENT OPERATION, THE UNITED STATES GOVERNMENT THEREBY INCURS NO RESPONSIBILITY NOR ANY OBLIGATION WHATSOEVER; AND THE FACT THAT THE GOVERNMENT MAY HAVE FORMULATED, FURNISHED, OR IN ANY WAY SUPPLIED THE SAID DRAWINGS, SPECIFICATIONS, OR OTHER DATA IS NOT TO BE REGARDED BY IMPLICATION OR OTHERWISE AS IN ANY MANNER LICENSING THE HOLDER OR ANY OTHER PERSON OR CORPORATION, OR CONVEYING ANY RIGHTS OR PERMISSION TO MANUFACTURE, USE, OR SELL ANY PATENTED INVENTION THAT MAY IN ANY WAY BE RELATED THERETO.

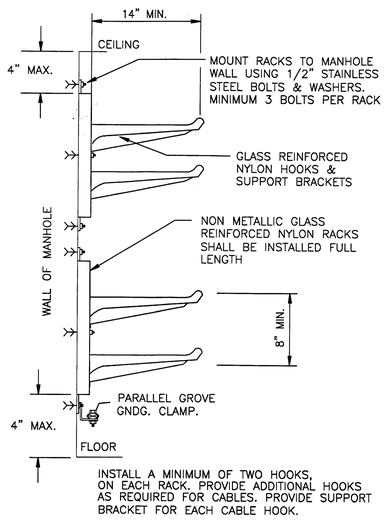

CABLE RACK INSTALLATION IN MANHOLES (1 / E-511)

NOT TO SCALE

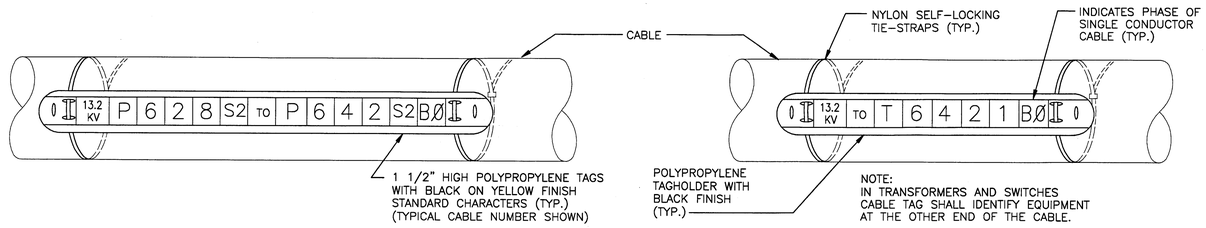

CIRCUIT IDENTIFICATION TAG – DETAIL (2 / TYP.)

FOR NEW AND EXISTING CABLE — NOT TO SCALE

SPECIFIC NOTES:

A. REFER TO DWG. E-001 FOR GENERAL NOTES AND E-002 FOR SYMBOLS LEGEND.

B PROVIDE BONDUIT, OR APPROVED EQUAL, CONDUIT ADHESIVE WHERE CONNECTING HDPE CONDUIT TO BELL ENDS.

C LOCATE CENTER OF GROUND ROD A MINIMUM OF 6" FROM SIDES OF ENCLOSURE.

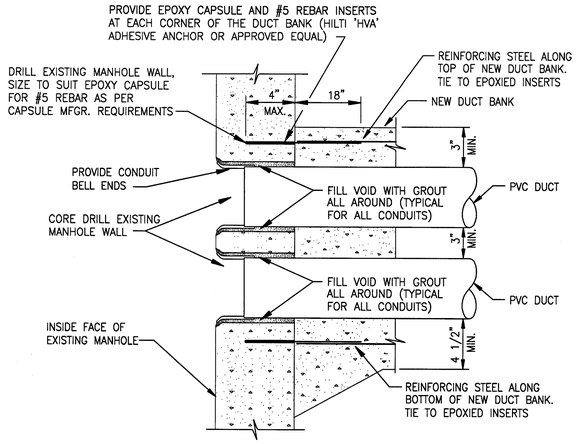

TYPICAL DUCT ENTRANCE TO MANHOLE DETAIL (3 / TYP.)

NOT TO SCALE

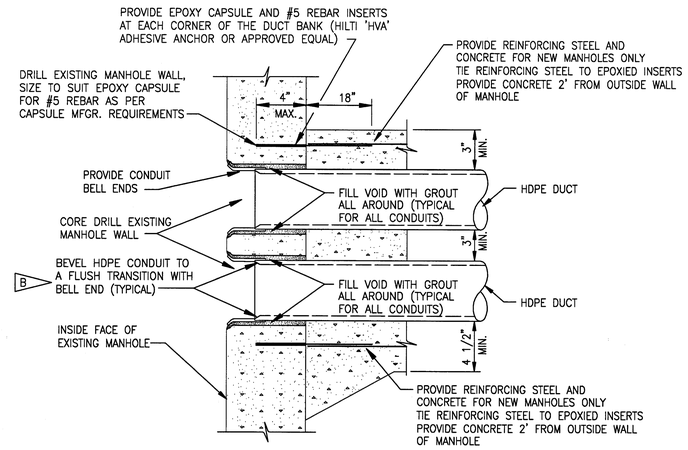

TYPICAL HDPE DUCT ENTRANCE TO MANHOLE DETAIL (4 / TYP.)

NOT TO SCALE

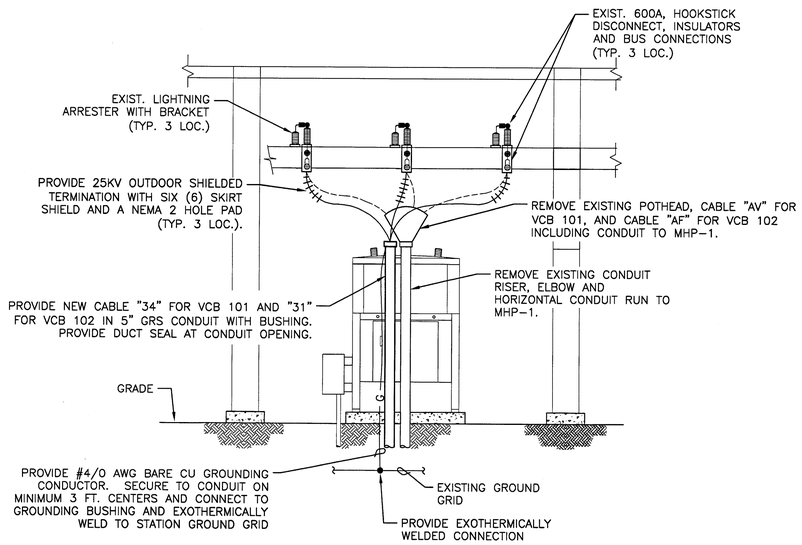

FEEDERS 101 AND 102 CABLE RISER REPLACEMENT (5 / E-411)

NOT TO SCALE

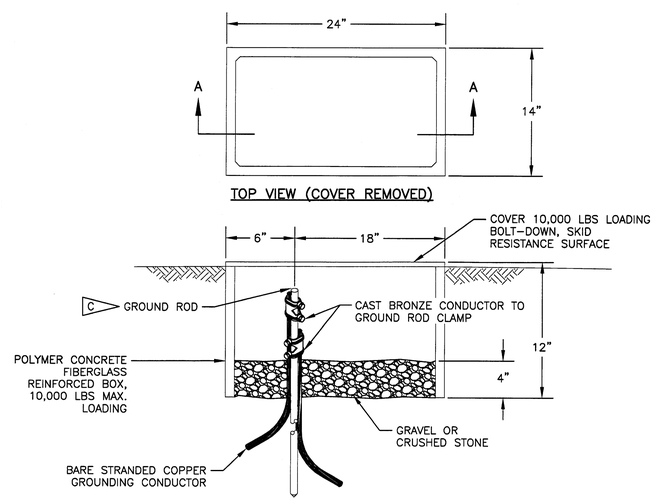

GROUND INSPECTION/TEST WELL (6 / E-502, E-503)

NOT TO SCALE

SYM.	ZONE	DESCRIPTION	DATE	APPROVED
		REVISIONS		

URS — 7650 West Courtney Campbell Causeway, Suite 700, Tampa, Florida 33607, Ph: (813) 286-1711, Fax: (813) 286-6587, Florida Engineering Number: 000002

SIGNATURES		DATE
DRAWN	TRS	9/24/12
CHECKED	GSK	9/24/12
SUBMITTED	GLENN H. DAVIS	9/24/12
ST OF LICENSURE: FL		
LICENSE NO.: 66443		
APPROVED	F. WALKER	9/24/12
	S. MEHTA	9/25/12

NATIONAL AERONAUTICS AND SPACE ADMINISTRATION
JOHN F. KENNEDY SPACE CENTER, NASA
KENNEDY SPACE CENTER, FLORIDA

REVITALIZE MEDIUM VOLTAGE ELECTRICAL DISTRIBUTION SYSTEMS, INDUSTRIAL AND PAYLOAD PROCESSING AREAS

MISCELLANEOUS DETAILS

E-512

FILE NO.	SIZE	DWG. NO.
	F	79K39135
PCN NO. 98860		SHEET 73

KSC FORM 1-11A (REV 6/91) (C/G 12/93)

I:\NASA KSC\Task No. 1\Drawings\E-512 MISCELLANEOUS DETAILS.dwg 09/20/2012 14:05

NOTICE – WHEN GOVERNMENT DRAWINGS, SPECIFICATIONS, OR OTHER DATA ARE USED FOR ANY PURPOSE OTHER THAN IN CONNECTION WITH A DEFINITELY-RELATED GOVERNMENT PROCUREMENT OPERATION, THE UNITED STATES GOVERNMENT THEREBY INCURS NO RESPONSIBILITY NOR ANY OBLIGATION WHATSOEVER; AND THE FACT THAT THE GOVERNMENT MAY HAVE FORMULATED, FURNISHED, OR IN ANY WAY SUPPLIED THE SAID DRAWINGS, SPECIFICATIONS, OR OTHER DATA IS NOT TO BE REGARDED BY IMPLICATION OR OTHERWISE AS IN ANY MANNER LICENSING THE HOLDER OR ANY OTHER PERSON OR CORPORATION, OR CONVEYING ANY RIGHTS OR PERMISSION TO MANUFACTURE, USE, OR SELL ANY PATENTED INVENTION THAT MAY IN ANY WAY BE RELATED THERETO.

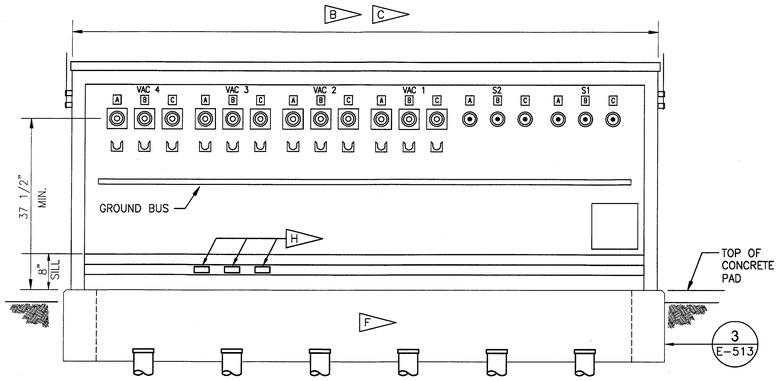

REAR ELEVATION
4 INTERRUPTERS & 2 SWITCHES
(DOORS NOT SHOWN FOR CLARITY)

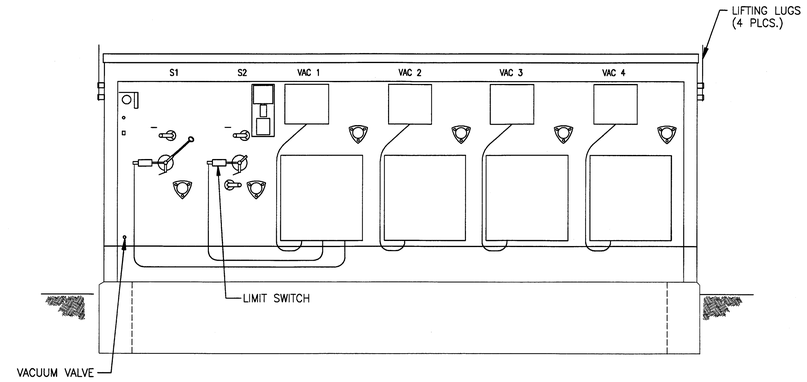

FRONT ELEVATION
(DOORS NOT SHOWN FOR CLARITY)

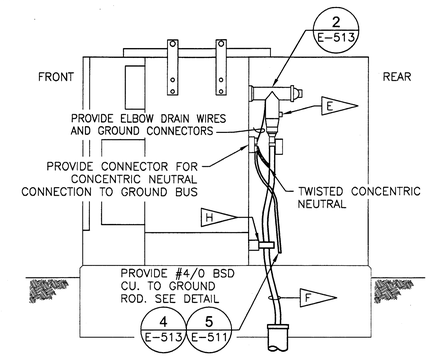

SIDE ELEVATION
(SIDE PANEL NOT SHOWN FOR CLARITY)

LOAD BREAK SWITCH WITH VACUUM FAULT INTERRUPTERS 15KV, SF6 PAD MOUNT VFI DETAIL

B — NOT TO SCALE — 1 (E-402, E-403, E-602)

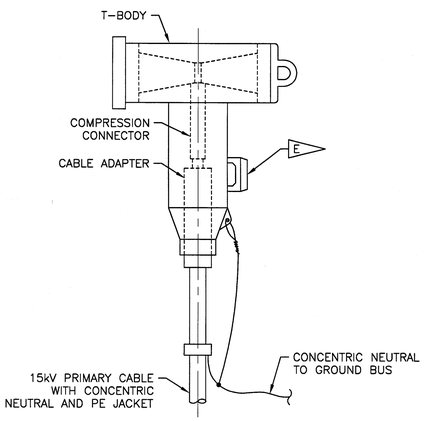

15KV, 600A. TERMINATOR ASSEMBLY

NOT TO SCALE — 2 (E-513, E-514)

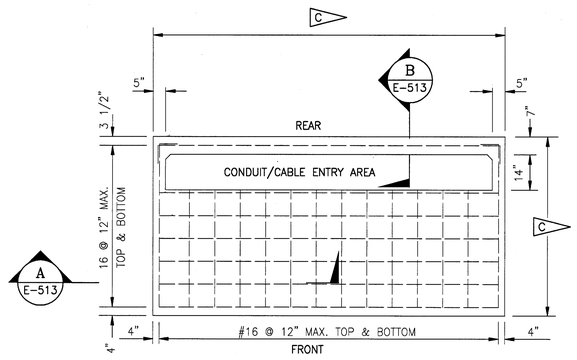

CONCRETE PAD DETAIL – PLAN

NOT TO SCALE — 3 (E-513)

SPECIFIC NOTES:

A. REFER TO DWG. E-001 FOR GENERAL NOTES AND E-002 FOR SYMBOLS LEGEND

B. DIMENSIONS INDICATED FOR VFI ENCLOSURE AND CONCRETE PAD ARE SPECIFIC TO THE BASIS OF DESIGN. THE CONTRACTOR IS RESPONSIBLE FOR VERIFYING DIMENSIONS OF FURNISHED EQUIPMENT. IF FURNISHED EQUIPMENT EXCEEDS VALUES SHOWN, THE CONTRACTOR IS RESPONSIBLE FOR INCREASING THE CONCRETE PAD TO MATCH. PROVIDE A MINIMUM OF 6" BETWEEN ENCLOSURE AND EDGE OF CONCRETE PAD. WHERE METERING CABINETS ARE SHOWN ADJACENT TO ENCLOSURE, PROVIDE A MINIMUM OF 18" BETWEEN SWITCH ENCLOSURE AND EDGE OF CONCRETE PAD.

C. BASIS OF DESIGN FOR SWITCH DIMENSIONS ARE SHOWN BELOW. ADJUST DIMENSIONS AS REQUIRED BASED ON ACTUAL EQUIPMENT PROVIDED:
88" FOR VFI-13, VFI-18A, AND VFI-19A.
124" FOR VFI-14, VFI-31, VFI-32, AND VFI-80.

D. REFER TO DWG. E-004 FOR MODIFIED CABLE SCHEDULE.

E. PROVIDE HOT LINE VOLTAGE INDICATOR ON TEST POINT FOR 600A BOLTED ELBOW.

F. PROVIDE CABLE TAGS ON ALL NEW CABLES. REFER TO DETAIL 2 ON DWG. E-512.

G. PROVIDE 600A DEADBREAK BUSHING FOR ALL SWITCHED AND PROTECTED WAYS.

H. WHERE INDICATED ON SINGLE LINE DIAGRAMS, PROVIDE CURRENT TRANSFORMERS MOUNTED INTERNAL TO THE VFI ENCLOSURE. PROVIDE MOUNTING STRUCTURE TO SECURE THE CT'S TO THE VFI STRUCTURE. PROVIDE NIPPLE THROUGH TO METER TERMINAL CABINET. REFER TO DWG. E-631 FOR ADDITIONAL REQUIREMENTS.

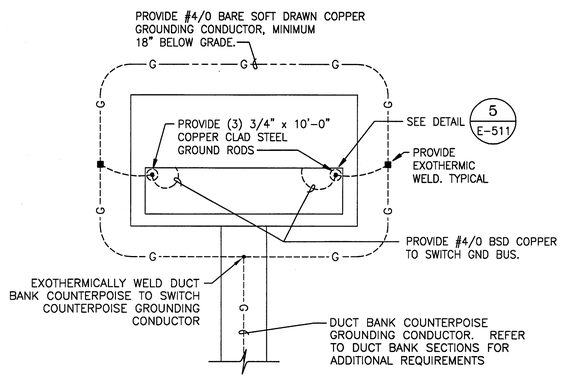

SWITCH GROUNDING DETAIL

NOT TO SCALE — 4 (E-513, E-514)

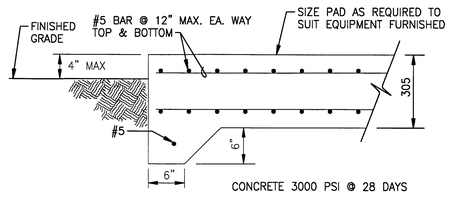

B — SECTION A — NOT TO SCALE — E-513

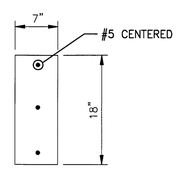

SECTION B — NOT TO SCALE — E-513

SYM.	ZONE	DESCRIPTION	DATE	APPROVED
		REVISIONS		

URS
7650 West Courtney Campbell Causeway
Suite 700
Tampa, Florida 33607
Ph: (813) 286-1711 Fax: (813) 286-6567
Florida Engineering Number: 000002

SIGNATURES		DATE
DRAWN	TRS	9/24/12
CHECKED	GSK	9/24/12
SUBMITTED	GLENN H. DAVIS	9/24/12
ST OF LICENSURE: FL		
LICENSE NO.: 66443		
APPROVED	F. WALKER	9/24/12
	S. MEHTA	9/25/12

NATIONAL AERONAUTICS AND SPACE ADMINISTRATION
JOHN F. KENNEDY SPACE CENTER, NASA
KENNEDY SPACE CENTER, FLORIDA

REVITALIZE MEDIUM VOLTAGE ELECTRICAL DISTRIBUTION SYSTEMS, INDUSTRIAL AND PAYLOAD PROCESSING AREAS

VFI DETAILS

E-513

FILE NO.	SIZE	DWG. NO.
	F	79K39135
PCN NO. 98860		SHEET 74

KSC FORM 1-11A (REV 6/91) (C/G 12/93)

NOTICE - WHEN GOVERNMENT DRAWINGS, SPECIFICATIONS, OR OTHER DATA ARE USED FOR ANY PURPOSE OTHER THAN IN CONNECTION WITH A DEFINITELY RELATED GOVERNMENT PROCUREMENT OPERATION, THE UNITED STATES GOVERNMENT THEREBY INCURS NO RESPONSIBILITY NOR ANY OBLIGATION WHATSOEVER; AND THE FACT THAT THE GOVERNMENT MAY HAVE FORMULATED, FURNISHED, OR IN ANY WAY SUPPLIED THE SAID DRAWINGS, SPECIFICATIONS, OR OTHER DATA IS NOT TO BE REGARDED BY IMPLICATION OR OTHERWISE AS IN ANY MANNER LICENSING THE HOLDER OR ANY OTHER PERSON OR CORPORATION, OR CONVEYING ANY RIGHTS OR PERMISSION TO MANUFACTURE, USE, OR SELL ANY PATENTED INVENTION THAT MAY IN ANY WAY BE RELATED THERETO.

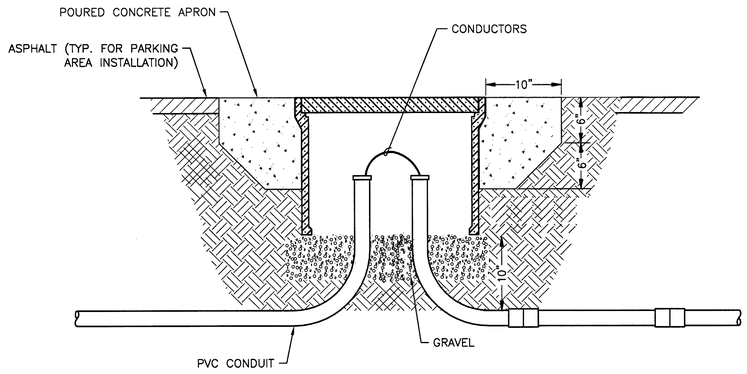

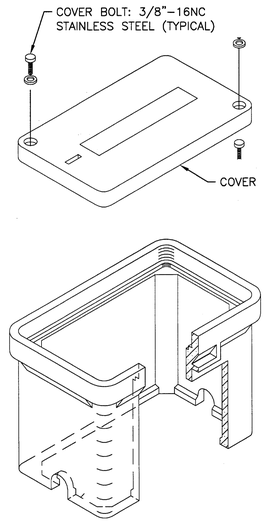

PULLBOX SPECIFICATION:
BOX SHALL BE COMPOSED OF REINFORCED PLASTIC MORTAR AND BE DESIGNED AND TESTED TO MEET ASTM D-635 FLAMMABILITY TEST AND A SERVICE RATING: 15000# OVER ANY 10" X 10" AREA. MARK COVER AS INDICATED ON PLANS.

HEAVY DUTY IN-GROUND PULLBOX DETAIL (2 / TYP.)
NOT TO SCALE (D)

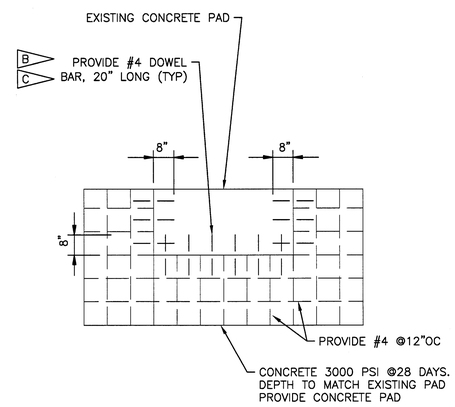

PAD REBAR

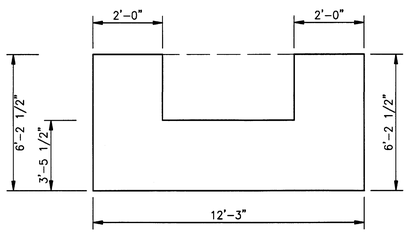

PAD DIMENSIONS

VFI-80
MODIFIED PAD DETAIL (1 / E-407)
NOT TO SCALE

SPECIFIC NOTES:

A. REFER TO DWG. E-001 FOR GENERAL NOTES.

B. CHIP OFF CHAMFERED CORNER OF EQUIPMENT PAD PRIOR TO PROVIDING PAD EXTENSION.

C. DRILL 5/8"ø HOLES, 8 1/2" DEEP INTO EXISTING CONCRETE PAD WITH CARBIDE TIPPED DRILL BITS AND INSTALL #4 DOWEL BARS. USE EPOXY ADHESIVE ANCHOR CAPSULES TO INSTALL AND BOND DOWEL BARS IN HOLES.

D. SEE PLANS FOR PULLBOX DIMENSIONS.

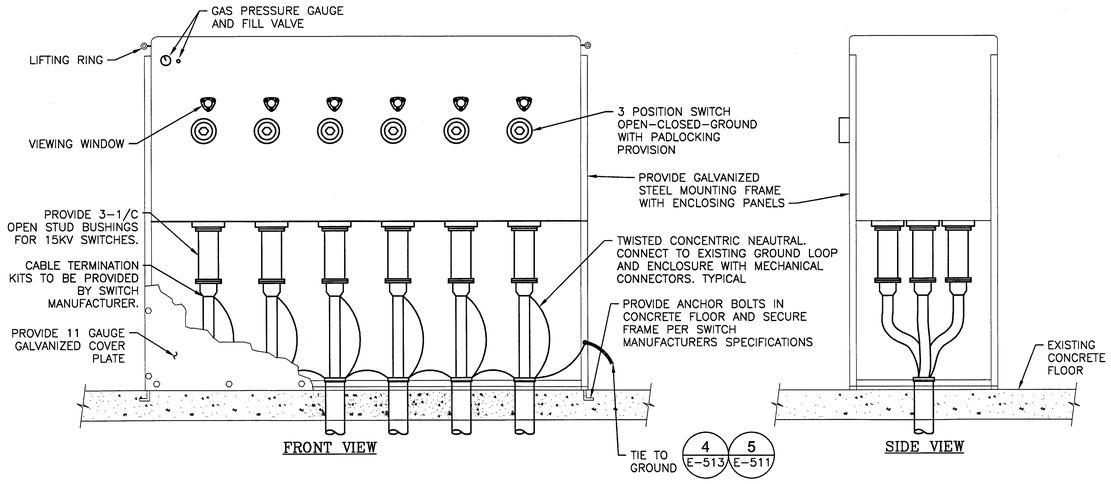

15KV SF6 VAULT STYLE SWITCH DETAIL (3 / E-406)
(6 WAY SWITCH)
NOT TO SCALE

SYM.	ZONE	DESCRIPTION	DATE	APPROVED
		REVISIONS		

URS
7650 West Courtney Campbell Causeway
Suite 700
Tampa, Florida 33607
Ph: (813) 286-1711 Fax: (813) 286-6587
Florida Engineering Number: 000002

SIGNATURES		DATE
DRAWN	TRS	9/24/12
CHECKED	GSK	9/24/12
SUBMITTED	GLENN H. DAVIS	9/24/12
ST OF LICENSURE: FL		
LICENSE NO.: 66443		
APPROVED	F. WALKER	9/24/12
	S. MEHTA	9/25/12

NATIONAL AERONAUTICS AND SPACE ADMINISTRATION
JOHN F. KENNEDY SPACE CENTER, NASA
KENNEDY SPACE CENTER, FLORIDA

REVITALIZE MEDIUM VOLTAGE
ELECTRICAL DISTRIBUTION SYSTEMS,
INDUSTRIAL AND PAYLOAD PROCESSING AREAS

LBS DETAILS

E-514

FILE NO.	SIZE	DWG. NO.
	F	79K39135
PCN NO. 98860		SHEET 75

KSC FORM 1-11A (REV 6/91) (C/G 12/93)

NOTICE – WHEN GOVERNMENT DRAWINGS, SPECIFICATIONS, OR OTHER DATA ARE USED FOR ANY PURPOSE OTHER THAN IN CONNECTION WITH A DEFINITELY RELATED GOVERNMENT PROCUREMENT OPERATION, THE UNITED STATES GOVERNMENT THEREBY INCURS NO RESPONSIBILITY NOR ANY OBLIGATION WHATSOEVER; AND THE FACT THAT THE GOVERNMENT MAY HAVE FORMULATED, FURNISHED, OR IN ANY WAY SUPPLIED THE SAID DRAWINGS, SPECIFICATIONS, OR OTHER DATA IS NOT TO BE REGARDED BY IMPLICATION OR OTHERWISE AS IN ANY MANNER LICENSING THE HOLDER OR ANY OTHER PERSON OR CORPORATION, OR CONVEYING ANY RIGHTS OR PERMISSION TO MANUFACTURE, USE, OR SELL ANY PATENTED INVENTION THAT MAY IN ANY WAY BE RELATED THERETO.

SPECIFIC NOTES:

A. "FINAL GRADE" SHALL BE UNDERSTOOD TO REFER TO THE "FINAL EARTHEN GRADE", "TOP OF PAVEMENT SURFACE" OR "TOP OF APRON SLAB", WHICHEVER IS PRESENT. RESTORE SURFACES DISTURBED BY CONSTRUCTION ACTIVITIES TO ORIGINAL CONDITION IN ACCORDANCE WITH THE CONTRACT GOVERNING SURFACE RESTORATION.

B. PROVIDE GROUND RODS ON MAXIMUM 100 FT CENTERS BETWEEN DUCT BANK TERMINATIONS AT MANHOLES/HANDHOLES AND BUILDINGS. BOND COUNTERPOISE GROUNDING CONDUCTOR TO GROUND ROD VIA EXOTHERMIC WELDING PROCESS.

C. REFER TO DRAWING E-415 FOR TOP OF DUCT BANK ELEVATION WHERE DUCT BANK CROSSES UNDER STORM/CONTAINMENT PIPES.

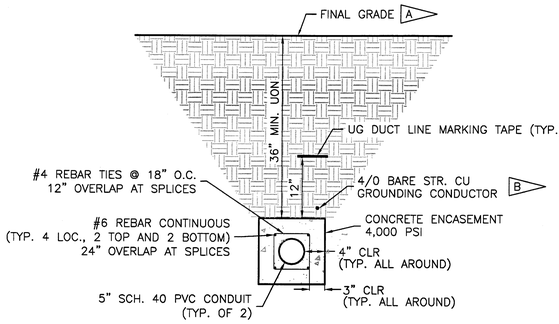

DB TYPE A SECTION (A / E-411)
NOT TO SCALE

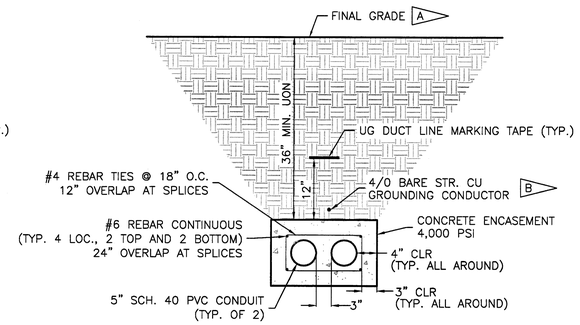

DB TYPE B SECTION (B / E-403, E-413, E-415) C
NOT TO SCALE

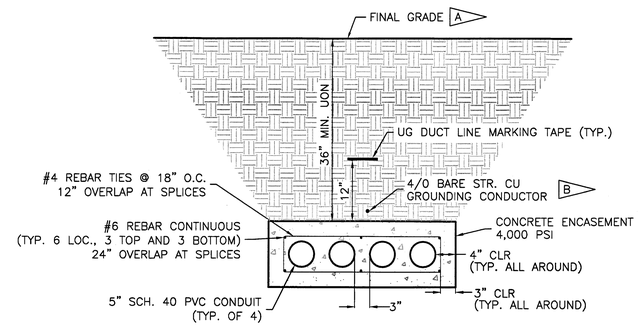

DB TYPE C SECTION (C / E-102, E-103, E-415)
NOT TO SCALE

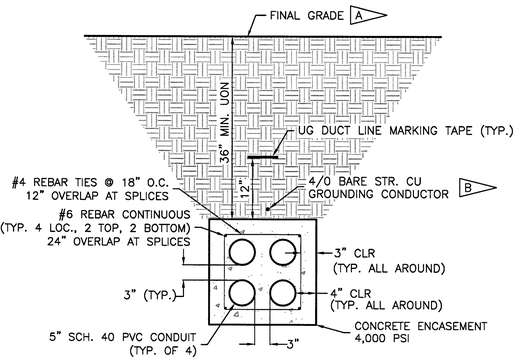

DB TYPE D SECTION (D / E-102, E-402, E-403, E-404, E-413, E-415)
NOT TO SCALE

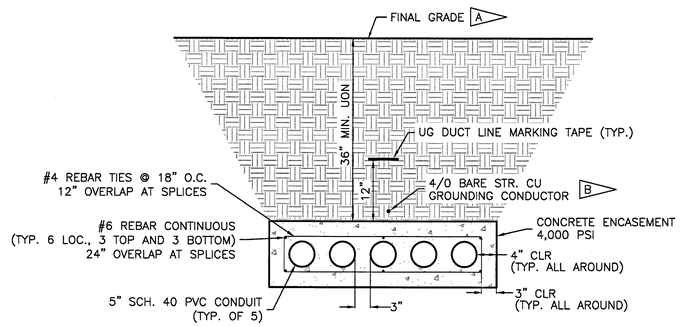

DB TYPE E SECTION (E / E-415) C
NOT TO SCALE

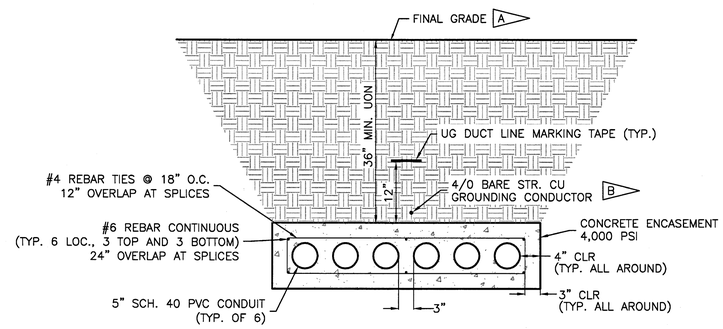

DB TYPE F SECTION (F / E-406, E-415) C
NOT TO SCALE

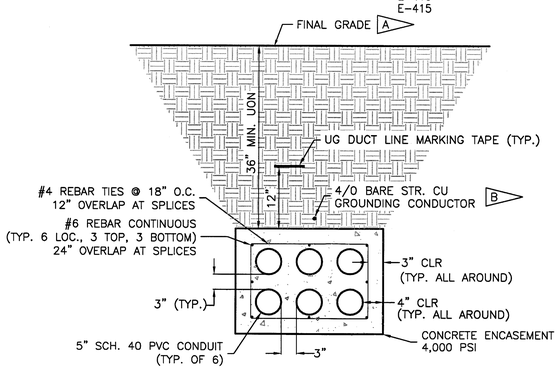

DB TYPE G SECTION (G / E-104, E-402, E-403, E-406)
NOT TO SCALE

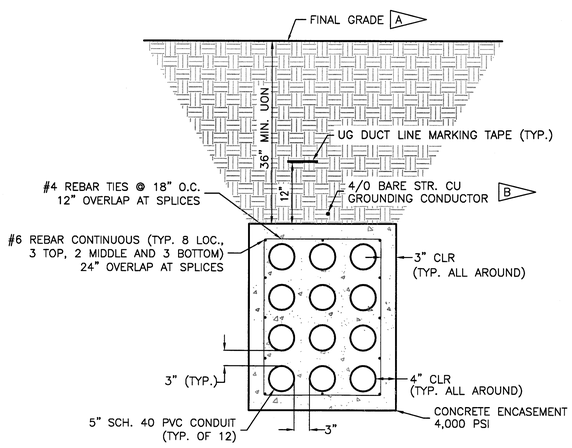

DB TYPE J SECTION (H / E-406, E-415)
NOT TO SCALE

SYM.	ZONE	DESCRIPTION	DATE	APPROVED
		REVISIONS		

URS
7650 West Courtney Campbell Causeway
Suite 700
Tampa, Florida 33607
Ph: (813) 286-1711 Fax: (813) 286-6587
Florida Engineering Number: 000002

SIGNATURES		DATE
DRAWN	TRS	9/24/12
CHECKED	GSK	9/24/12
SUBMITTED	GLENN H. DAVIS	9/24/12
ST OF LICENSURE: FL		
LICENSE NO.: 66443		
APPROVED	F. WALKER	9/28/12
	S. MEHTA	9/25/12

NATIONAL AERONAUTICS AND SPACE ADMINISTRATION
JOHN F. KENNEDY SPACE CENTER, NASA
KENNEDY SPACE CENTER, FLORIDA

REVITALIZE MEDIUM VOLTAGE
ELECTRICAL DISTRIBUTION SYSTEMS,
INDUSTRIAL AND PAYLOAD PROCESSING AREAS

DUCT BANK SECTIONS

E-515

FILE NO.	SIZE	DWG. NO.
	F	79K39135
PCN NO. 98860		SHEET 76

I:\MGA FED\Task No. 1\Drawings\E-515 DUCT BANK SECTIONS.dwg 09/20/2012 14:06
KSC FORM 1-11A (REV 6/91) (C/G 12/93)

NOTICE – WHEN GOVERNMENT DRAWINGS, SPECIFICATIONS, OR OTHER DATA ARE USED FOR ANY PURPOSE OTHER THAN IN CONNECTION WITH A DEFINITELY RELATED GOVERNMENT PROCUREMENT OPERATION, THE UNITED STATES GOVERNMENT THEREBY INCURS NO RESPONSIBILITY NOR ANY OBLIGATION WHATSOEVER; AND THE FACT THAT THE GOVERNMENT MAY HAVE FORMULATED, FURNISHED, OR IN ANY WAY SUPPLIED THE SAID DRAWINGS, SPECIFICATIONS, OR OTHER DATA IS NOT TO BE REGARDED BY IMPLICATION OR OTHERWISE AS IN ANY MANNER LICENSING THE HOLDER OR ANY OTHER PERSON OR CORPORATION, OR CONVEYING ANY RIGHTS OR PERMISSION TO MANUFACTURE, USE, OR SELL ANY PATENTED INVENTION THAT MAY IN ANY WAY BE RELATED THERETO.

SPECIFIC NOTES:

A. "FINAL GRADE" SHALL BE UNDERSTOOD TO REFER TO THE "FINAL EARTHEN GRADE", "TOP OF PAVEMENT SURFACE" OR "TOP OF APRON SLAB", WHICHEVER IS PRESENT. RESTORE SURFACES DISTURBED BY CONSTRUCTION ACTIVITIES TO ORIGINAL CONDITION IN ACCORDANCE WITH THE CONTRACT GOVERNING SURFACE RESTORATION.

B. PROVIDE GROUND RODS ON MAXIMUM 100 FT CENTERS BETWEEN DUCTBANK TERMINATIONS AT MANHOLES/HANDHOLES AND BUILDINGS. BOND COUNTERPOISE GROUNDING CONDUCTOR TO GROUND ROD VIA EXOTHERMIC WELDING PROCESS.

C. REFER TO DRAWING E-415 FOR TOP OF DUCT BANK ELEVATION WHERE DUCT BANK CROSSES UNDER STORM/CONTAINMENT PIPES.

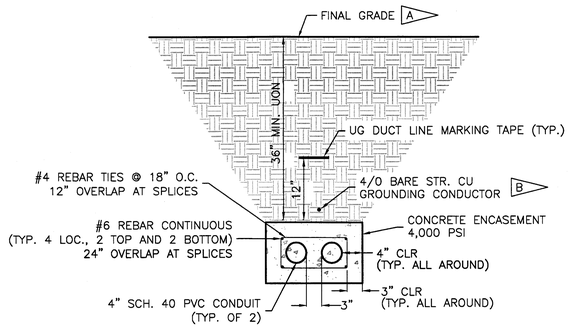

DB TYPE J SECTION (J / E-413)
NOT TO SCALE

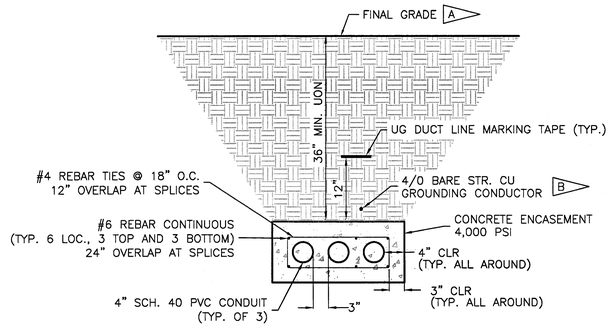

DB TYPE K SECTION (K / E-413)
NOT TO SCALE

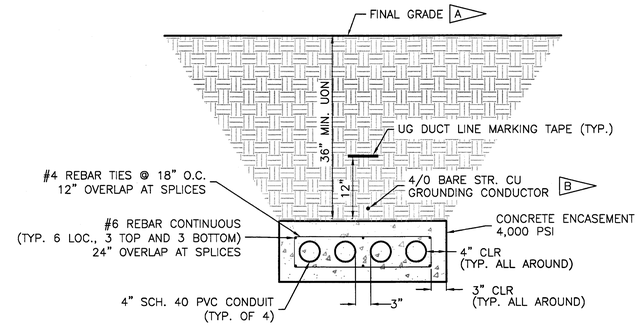

DB TYPE L SECTION (L / E-413)
NOT TO SCALE

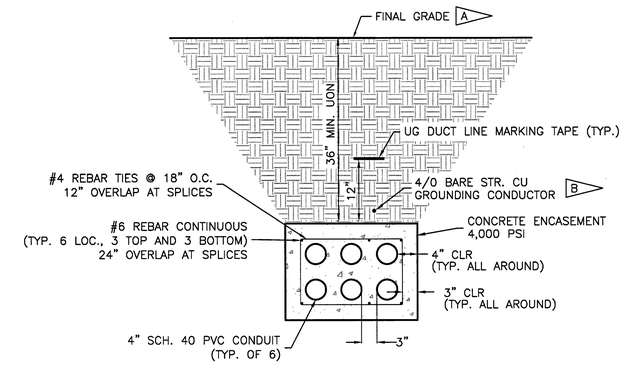

DB TYPE M SECTION (M / E-413)
NOT TO SCALE

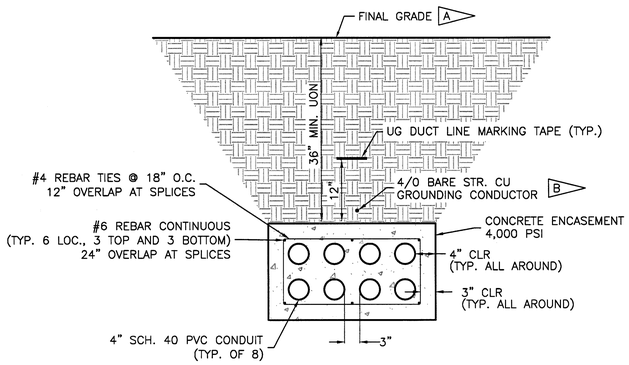

DB TYPE N SECTION (N / -)
NOT TO SCALE

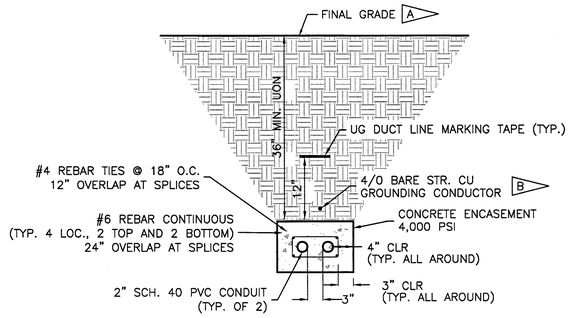

DB TYPE P SECTION (P / E-415) C
NOT TO SCALE

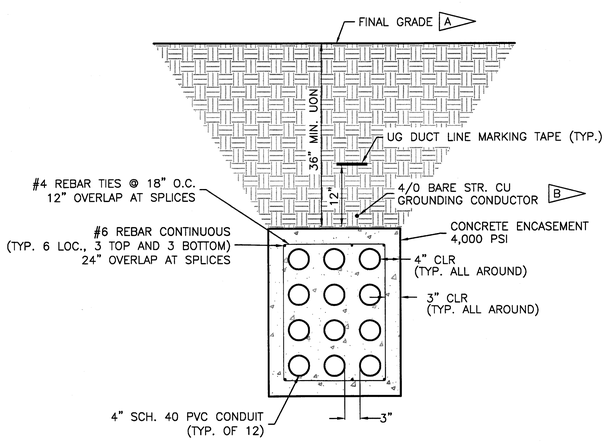

DB TYPE R SECTION (R / E-413)
NOT TO SCALE

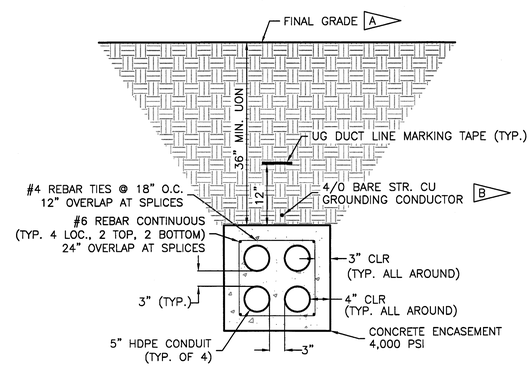

DB TYPE S SECTION (S / E-102, E-403)
NOT TO SCALE

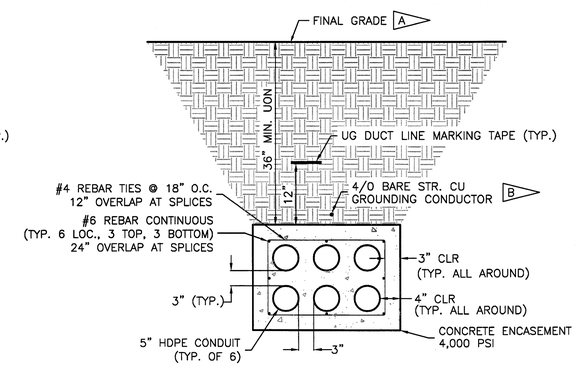

DB TYPE T SECTION (T / E-104, E-415) C
NOT TO SCALE

SYM.	ZONE	DESCRIPTION	DATE	APPROVED
		REVISIONS		

URS
7650 West Courtney Campbell Causeway
Suite 700
Tampa, Florida 33607
Ph: (813) 286-1711 Fax: (813) 286-6587
Florida Engineering Number: 000002

SIGNATURES		DATE
DRAWN	TRS	9/24/12
CHECKED	GSK	9/24/12
SUBMITTED	GLENN H. DAVIS	9/24/12
ST OF LICENSURE: FL		
LICENSE NO.: 66443		
APPROVED	F. WALKER	9/24/12
	S. MEHTA	9/25/12

NATIONAL AERONAUTICS AND SPACE ADMINISTRATION
JOHN F. KENNEDY SPACE CENTER, NASA
KENNEDY SPACE CENTER, FLORIDA

REVITALIZE MEDIUM VOLTAGE
ELECTRICAL DISTRIBUTION SYSTEMS,
INDUSTRIAL AND PAYLOAD PROCESSING AREAS

DUCT BANK SECTIONS

E-516

FILE NO.	SIZE	DWG. NO.
	F	79K39135
PCN NO. 98860		SHEET 77

F:\NASA KSC\Task No. 1\Drawings\E-516 DUCT BANK SECTIONS CONF.dwg 09/20/2012 14:08
KSC FORM 1-11A (REV 6/91) (C/G 12/93)

NOTICE – WHEN GOVERNMENT DRAWINGS, SPECIFICATIONS, OR OTHER DATA ARE USED FOR ANY PURPOSE OTHER THAN IN CONNECTION WITH A DEFINITELY RELATED GOVERNMENT PROCUREMENT OPERATION, THE UNITED STATES GOVERNMENT THEREBY INCURS NO RESPONSIBILITY NOR ANY OBLIGATION WHATSOEVER; AND THE FACT THAT THE GOVERNMENT MAY HAVE FORMULATED, FURNISHED, OR IN ANY WAY SUPPLIED THE SAID DRAWINGS, SPECIFICATIONS, OR OTHER DATA IS NOT TO BE REGARDED BY IMPLICATION OR OTHERWISE AS IN ANY MANNER LICENSING THE HOLDER OR ANY OTHER PERSON OR CORPORATION, OR CONVEYING ANY RIGHTS OR PERMISSION TO MANUFACTURE, USE, OR SELL ANY PATENTED INVENTION THAT MAY IN ANY WAY BE RELATED THERETO.

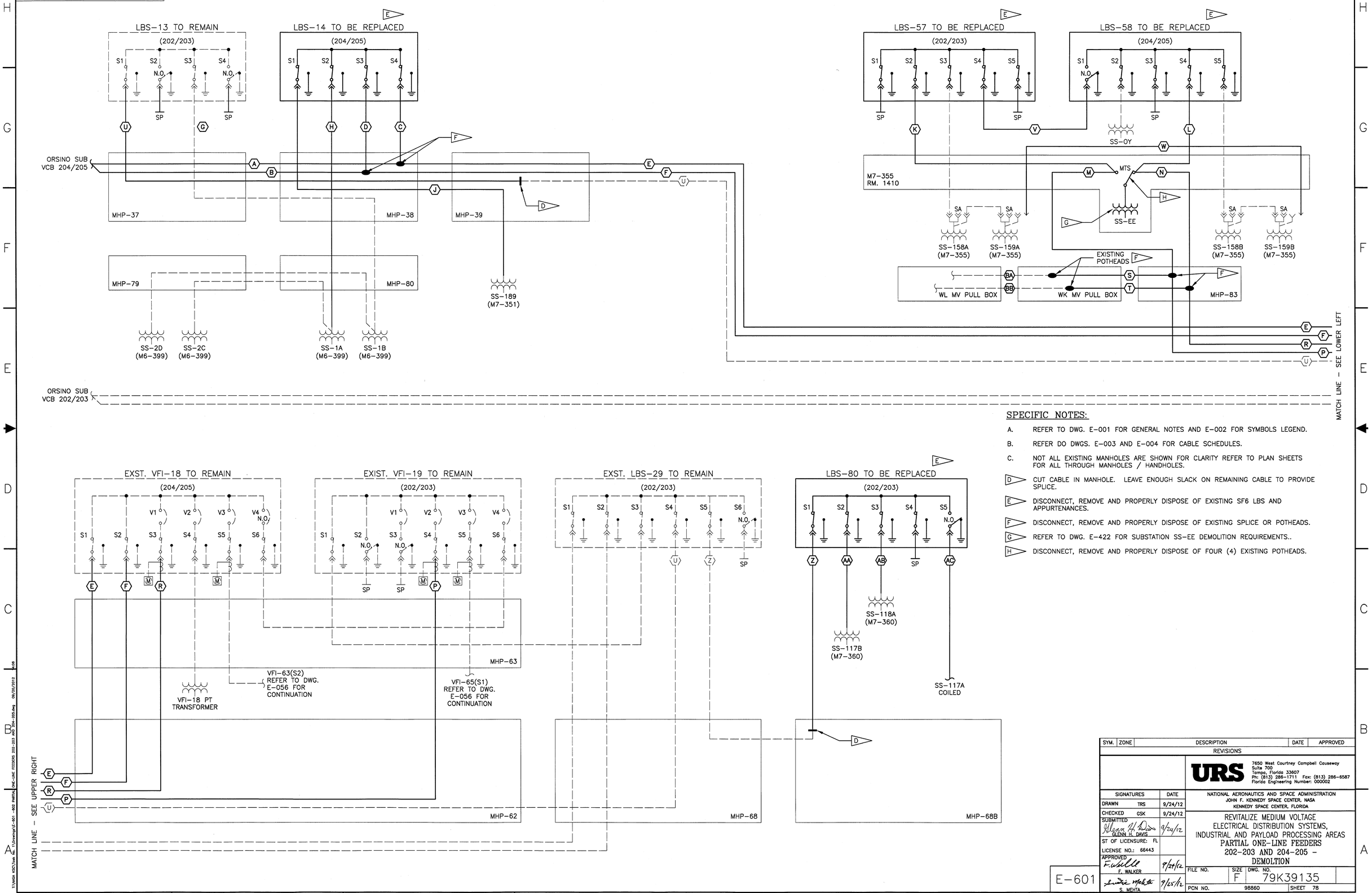

SPECIFIC NOTES:

A. REFER TO DWG. E-001 FOR GENERAL NOTES AND E-002 FOR SYMBOLS LEGEND.

B. REFER DO DWGS. E-003 AND E-004 FOR CABLE SCHEDULES.

C. NOT ALL EXISTING MANHOLES ARE SHOWN FOR CLARITY REFER TO PLAN SHEETS FOR ALL THROUGH MANHOLES / HANDHOLES.

D. CUT CABLE IN MANHOLE. LEAVE ENOUGH SLACK ON REMAINING CABLE TO PROVIDE SPLICE.

E. DISCONNECT, REMOVE AND PROPERLY DISPOSE OF EXISTING SF6 LBS AND APPURTENANCES.

F. DISCONNECT, REMOVE AND PROPERLY DISPOSE OF EXISTING SPLICE OR POTHEADS.

G. REFER TO DWG. E-422 FOR SUBSTATION SS-EE DEMOLITION REQUIREMENTS..

H. DISCONNECT, REMOVE AND PROPERLY DISPOSE OF FOUR (4) EXISTING POTHEADS.

SYM.	ZONE	DESCRIPTION	DATE	APPROVED
		REVISIONS		

URS
7650 West Courtney Campbell Causeway
Suite 700
Tampa, Florida 33607
Ph: (813) 286-1711 Fax: (813) 286-6587
Florida Engineering Number: 000002

SIGNATURES		DATE
DRAWN	TRS	9/24/12
CHECKED	GSK	9/24/12
SUBMITTED	GLENN H. DAVIS	9/24/12
ST OF LICENSURE: FL		
LICENSE NO.: 66443		
APPROVED	F. WALKER	9/25/12
	S. MEHTA	9/25/12

NATIONAL AERONAUTICS AND SPACE ADMINISTRATION
JOHN F. KENNEDY SPACE CENTER, NASA
KENNEDY SPACE CENTER, FLORIDA

REVITALIZE MEDIUM VOLTAGE ELECTRICAL DISTRIBUTION SYSTEMS, INDUSTRIAL AND PAYLOAD PROCESSING AREAS
PARTIAL ONE-LINE FEEDERS 202-203 AND 204-205 – DEMOLTION

FILE NO.	SIZE	DWG. NO.
	F	79K39135
PCN NO. 98860		SHEET 78

E-601

KSC FORM 1-11A (REV 8/91) (C/G 12/93)

NOTICE – WHEN GOVERNMENT DRAWINGS, SPECIFICATIONS, OR OTHER DATA ARE USED FOR ANY PURPOSE OTHER THAN IN CONNECTION WITH A DEFINITELY RELATED GOVERNMENT PROCUREMENT OPERATION, THE UNITED STATES GOVERNMENT THEREBY INCURS NO RESPONSIBILITY NOR ANY OBLIGATION WHATSOEVER; AND THE FACT THAT THE GOVERNMENT MAY HAVE FORMULATED, FURNISHED, OR IN ANY WAY SUPPLIED THE SAID DRAWINGS, SPECIFICATIONS, OR OTHER DATA IS NOT TO BE REGARDED BY IMPLICATION OR OTHERWISE AS IN ANY MANNER LICENSING THE HOLDER OR ANY OTHER PERSON OR CORPORATION, OR CONVEYING ANY RIGHTS OR PERMISSION TO MANUFACTURE, USE, OR SELL ANY PATENTED INVENTION THAT MAY IN ANY WAY BE RELATED THERETO.

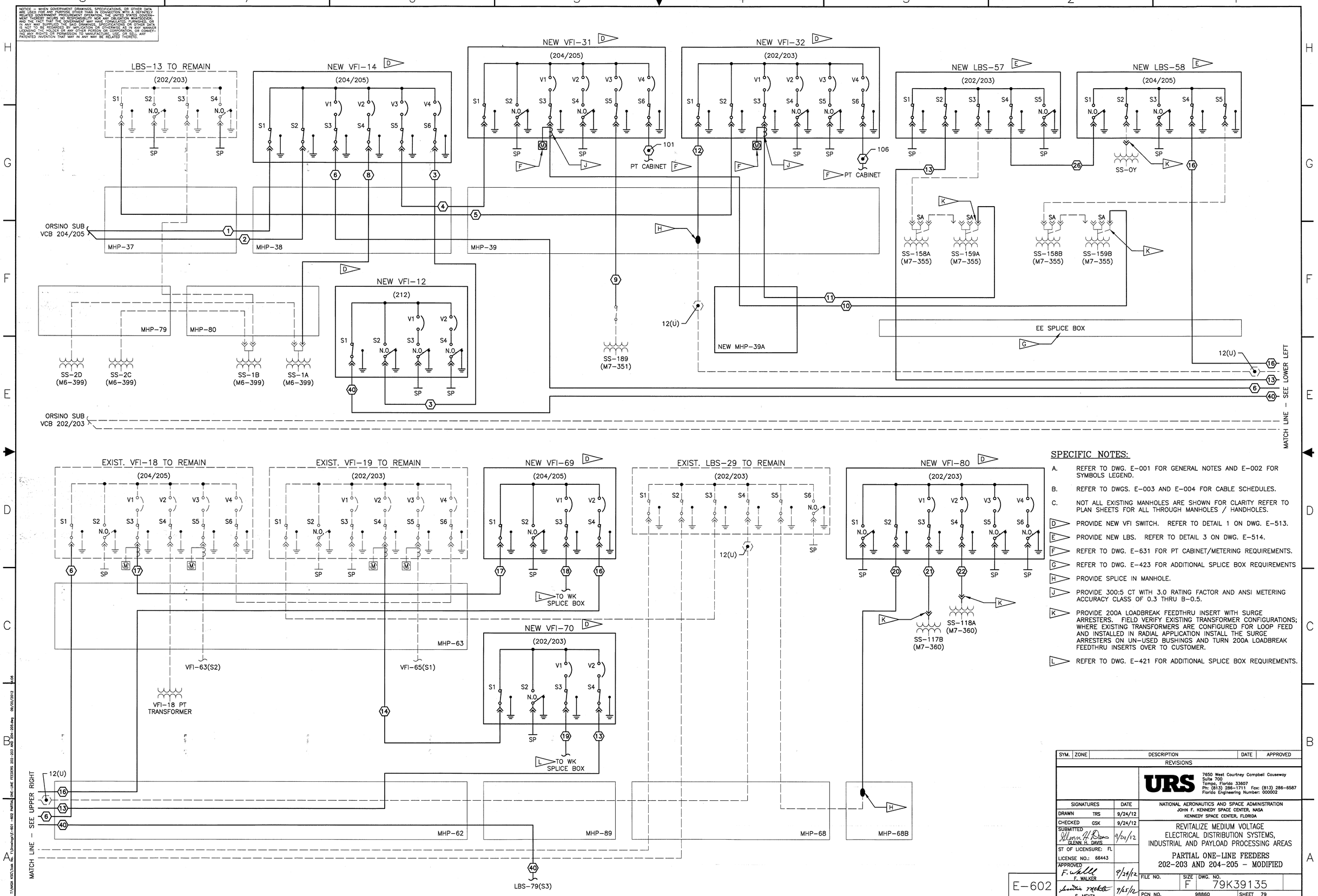

SPECIFIC NOTES:

A. REFER TO DWG. E-001 FOR GENERAL NOTES AND E-002 FOR SYMBOLS LEGEND.

B. REFER TO DWGS. E-003 AND E-004 FOR CABLE SCHEDULES.

C. NOT ALL EXISTING MANHOLES ARE SHOWN FOR CLARITY REFER TO PLAN SHEETS FOR ALL THROUGH MANHOLES / HANDHOLES.

D. PROVIDE NEW VFI SWITCH. REFER TO DETAIL 1 ON DWG. E-513.

E. PROVIDE NEW LBS. REFER TO DETAIL 3 ON DWG. E-514.

F. REFER TO DWG. E-631 FOR PT CABINET/METERING REQUIREMENTS.

G. REFER TO DWG. E-423 FOR ADDITIONAL SPLICE BOX REQUIREMENTS

H. PROVIDE SPLICE IN MANHOLE.

J. PROVIDE 300:5 CT WITH 3.0 RATING FACTOR AND ANSI METERING ACCURACY CLASS OF 0.3 THRU B-0.5.

K. PROVIDE 200A LOADBREAK FEEDTHRU INSERT WITH SURGE ARRESTERS. FIELD VERIFY EXISTING TRANSFORMER CONFIGURATIONS; WHERE EXISTING TRANSFORMERS ARE CONFIGURED FOR LOOP FEED AND INSTALLED IN RADIAL APPLICATION INSTALL THE SURGE ARRESTERS ON UN-USED BUSHINGS AND TURN 200A LOADBREAK FEEDTHRU INSERTS OVER TO CUSTOMER.

L. REFER TO DWG. E-421 FOR ADDITIONAL SPLICE BOX REQUIREMENTS.

SYM.	ZONE	DESCRIPTION	DATE	APPROVED
		REVISIONS		

URS
7650 West Courtney Campbell Causeway
Suite 700
Tampa, Florida 33607
Ph: (813) 286-1711 Fax: (813) 286-6587
Florida Engineering Number: 000002

SIGNATURES		DATE
DRAWN	TRS	9/24/12
CHECKED	GSK	9/24/12
SUBMITTED	GLENN H. DAVIS	9/24/12
ST OF LICENSURE: FL		
LICENSE NO.: 66443		
APPROVED	F. WALKER	9/24/12
	S. MEHTA	9/5/12

NATIONAL AERONAUTICS AND SPACE ADMINISTRATION
JOHN F. KENNEDY SPACE CENTER, NASA
KENNEDY SPACE CENTER, FLORIDA

REVITALIZE MEDIUM VOLTAGE
ELECTRICAL DISTRIBUTION SYSTEMS,
INDUSTRIAL AND PAYLOAD PROCESSING AREAS

PARTIAL ONE-LINE FEEDERS
202-203 AND 204-205 – MODIFIED

E-602

FILE NO.	SIZE	DWG. NO.
	F	79K39135
PCN NO. 98860		SHEET 79

KSC FORM 1-11A (REV 8/91) (C/G 12/93)

NOTICE: WHEN GOVERNMENT DRAWINGS, SPECIFICATIONS, OR OTHER DATA ARE USED FOR ANY PURPOSE OTHER THAN IN CONNECTION WITH A DEFINITELY RELATED GOVERNMENT PROCUREMENT OPERATION, THE UNITED STATES GOVERNMENT THEREBY INCURS NO RESPONSIBILITY NOR ANY OBLIGATION WHATSOEVER; AND THE FACT THAT THE GOVERNMENT MAY HAVE FORMULATED, FURNISHED, OR IN ANY WAY SUPPLIED THE SAID DRAWINGS, SPECIFICATIONS, OR OTHER DATA IS NOT TO BE REGARDED BY IMPLICATION OR OTHERWISE AS IN ANY MANNER LICENSING THE HOLDER OR ANY OTHER PERSON OR CORPORATION, OR CONVEYING ANY RIGHTS OR PERMISSION TO MANUFACTURE, USE, OR SELL ANY PATENTED INVENTION THAT MAY IN ANY WAY BE RELATED THERETO.

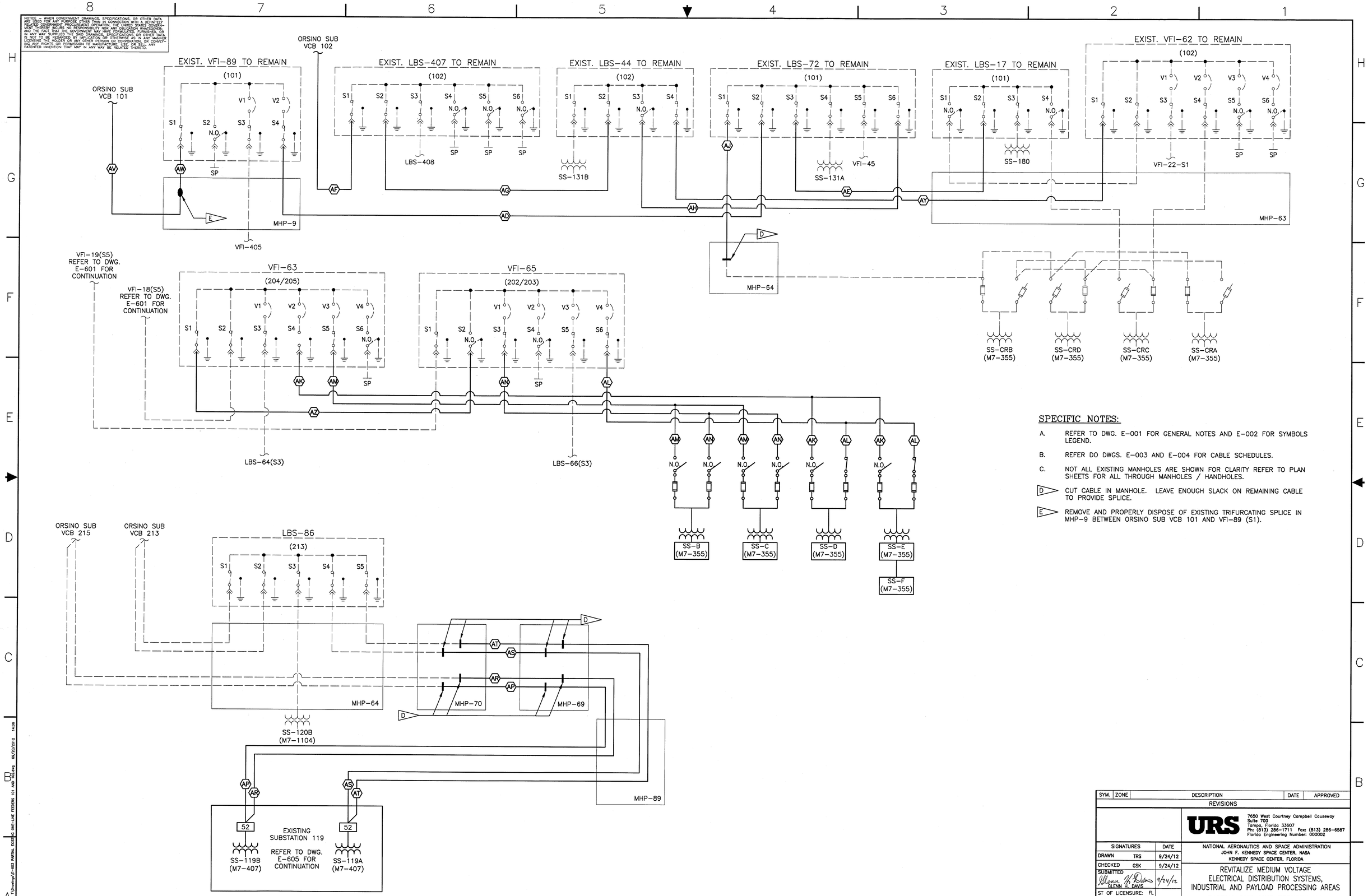

SPECIFIC NOTES:

A. REFER TO DWG. E-001 FOR GENERAL NOTES AND E-002 FOR SYMBOLS LEGEND.

B. REFER DO DWGS. E-003 AND E-004 FOR CABLE SCHEDULES.

C. NOT ALL EXISTING MANHOLES ARE SHOWN FOR CLARITY REFER TO PLAN SHEETS FOR ALL THROUGH MANHOLES / HANDHOLES.

D. CUT CABLE IN MANHOLE. LEAVE ENOUGH SLACK ON REMAINING CABLE TO PROVIDE SPLICE.

E. REMOVE AND PROPERLY DISPOSE OF EXISTING TRIFURCATING SPLICE IN MHP-9 BETWEEN ORSINO SUB VCB 101 AND VFI-89 (S1).

SYM.	ZONE	DESCRIPTION	DATE	APPROVED
		REVISIONS		

URS
7650 West Courtney Campbell Causeway
Suite 700
Tampa, Florida 33607
Ph: (813) 286-1711 Fax: (813) 286-6587
Florida Engineering Number: 000002

SIGNATURES		DATE
DRAWN	TRS	9/24/12
CHECKED	GSK	9/24/12
SUBMITTED	GLENN H. DAVIS	9/24/12
ST OF LICENSURE: FL		
LICENSE NO.: 66443		
APPROVED	F. WALKER	9/25/12
	S. MEHTA	9/25/12

NATIONAL AERONAUTICS AND SPACE ADMINISTRATION
JOHN F. KENNEDY SPACE CENTER, NASA
KENNEDY SPACE CENTER, FLORIDA

REVITALIZE MEDIUM VOLTAGE ELECTRICAL DISTRIBUTION SYSTEMS, INDUSTRIAL AND PAYLOAD PROCESSING AREAS

PARTIAL ONE-LINE FEEDERS 101, 102, 213 AND 215 - DEMOLITION

E-603

FILE NO. | SIZE F | DWG. NO. 79K39135

PCN NO. 98860 | SHEET 80

NOTICE – WHEN GOVERNMENT DRAWINGS, SPECIFICATIONS, OR OTHER DATA ARE USED FOR ANY PURPOSE OTHER THAN IN CONNECTION WITH A DEFINITELY RELATED GOVERNMENT PROCUREMENT OPERATION, THE UNITED STATES GOVERNMENT THEREBY INCURS NO RESPONSIBILITY NOR ANY OBLIGATION WHATSOEVER; AND THE FACT THAT THE GOVERNMENT MAY HAVE FORMULATED, FURNISHED, OR IN ANY WAY SUPPLIED THE SAID DRAWINGS, SPECIFICATIONS, OR OTHER DATA IS NOT TO BE REGARDED BY IMPLICATION OR OTHERWISE AS IN ANY MANNER LICENSING THE HOLDER OR ANY OTHER PERSON OR CORPORATION, OR CONVEYING ANY RIGHTS OR PERMISSION TO MANUFACTURE, USE, OR SELL ANY PATENTED INVENTION THAT MAY IN ANY WAY BE RELATED THERETO.

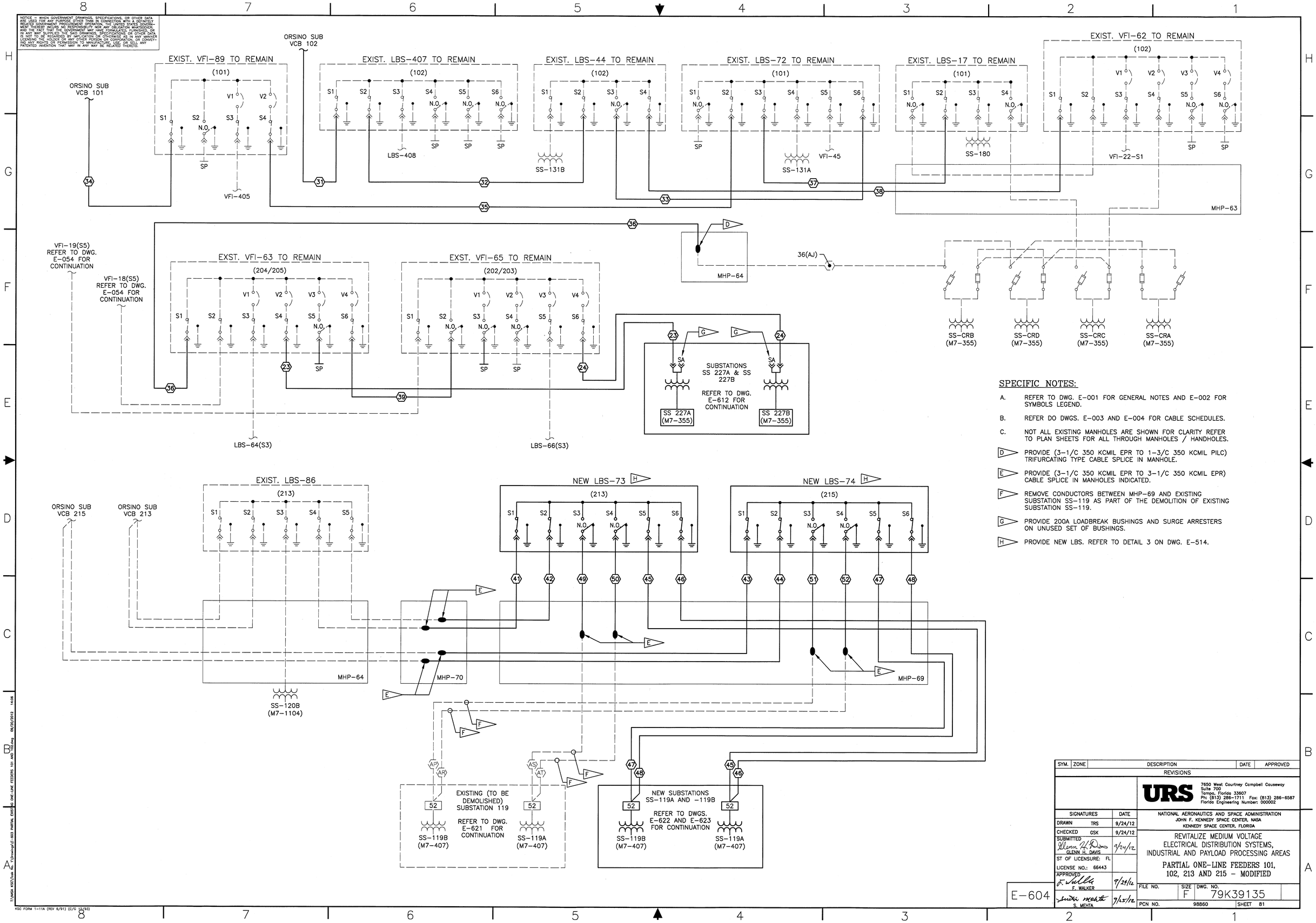

SPECIFIC NOTES:

A. REFER TO DWG. E-001 FOR GENERAL NOTES AND E-002 FOR SYMBOLS LEGEND.

B. REFER DO DWGS. E-003 AND E-004 FOR CABLE SCHEDULES.

C. NOT ALL EXISTING MANHOLES ARE SHOWN FOR CLARITY REFER TO PLAN SHEETS FOR ALL THROUGH MANHOLES / HANDHOLES.

D. PROVIDE (3-1/C 350 KCMIL EPR TO 1-3/C 350 KCMIL PILC) TRIFURCATING TYPE CABLE SPLICE IN MANHOLE.

E. PROVIDE (3-1/C 350 KCMIL EPR TO 3-1/C 350 KCMIL EPR) CABLE SPLICE IN MANHOLES INDICATED.

F. REMOVE CONDUCTORS BETWEEN MHP-69 AND EXISTING SUBSTATION SS-119 AS PART OF THE DEMOLITION OF EXISTING SUBSTATION SS-119.

G. PROVIDE 200A LOADBREAK BUSHINGS AND SURGE ARRESTERS ON UNUSED SET OF BUSHINGS.

H. PROVIDE NEW LBS. REFER TO DETAIL 3 ON DWG. E-514.

SYM.	ZONE	DESCRIPTION	DATE	APPROVED
		REVISIONS		

URS
7650 West Courtney Campbell Causeway
Suite 700
Tampa, Florida 33607
Ph: (813) 286-1711 Fax: (813) 286-6587
Florida Engineering Number: 000002

SIGNATURES		DATE
DRAWN	TRS	9/24/12
CHECKED	GSK	9/24/12
SUBMITTED	GLENN H. DAVIS	9/24/12
ST OF LICENSURE: FL		
LICENSE NO.: 66443		
APPROVED	F. WALKER	9/27/12
	S. MEHTA	9/25/12

NATIONAL AERONAUTICS AND SPACE ADMINISTRATION
JOHN F. KENNEDY SPACE CENTER, NASA
KENNEDY SPACE CENTER, FLORIDA

REVITALIZE MEDIUM VOLTAGE ELECTRICAL DISTRIBUTION SYSTEMS, INDUSTRIAL AND PAYLOAD PROCESSING AREAS

PARTIAL ONE-LINE FEEDERS 101, 102, 213 AND 215 – MODIFIED

E-604

FILE NO. | SIZE F | DWG. NO. 79K39135

PCN NO. 98860 | SHEET 81

KSC FORM 1-11A (REV 6/91) (C/G 12/93)

NOTICE - WHEN GOVERNMENT DRAWINGS, SPECIFICATIONS, OR OTHER DATA ARE USED FOR ANY PURPOSE OTHER THAN IN CONNECTION WITH A DEFINITELY RELATED GOVERNMENT PROCUREMENT OPERATION, THE UNITED STATES GOVERNMENT THEREBY INCURS NO RESPONSIBILITY NOR ANY OBLIGATION WHATSOEVER; AND THE FACT THAT THE GOVERNMENT MAY HAVE FORMULATED, FURNISHED, OR IN ANY WAY SUPPLIED THE SAID DRAWINGS, SPECIFICATIONS, OR OTHER DATA IS NOT TO BE REGARDED BY IMPLICATION OR OTHERWISE AS IN ANY MANNER LICENSING THE HOLDER OR ANY OTHER PERSON OR CORPORATION, OR CONVEYING ANY RIGHTS OR PERMISSION TO MANUFACTURE, USE, OR SELL ANY PATENTED INVENTION THAT MAY IN ANY WAY BE RELATED THERETO.

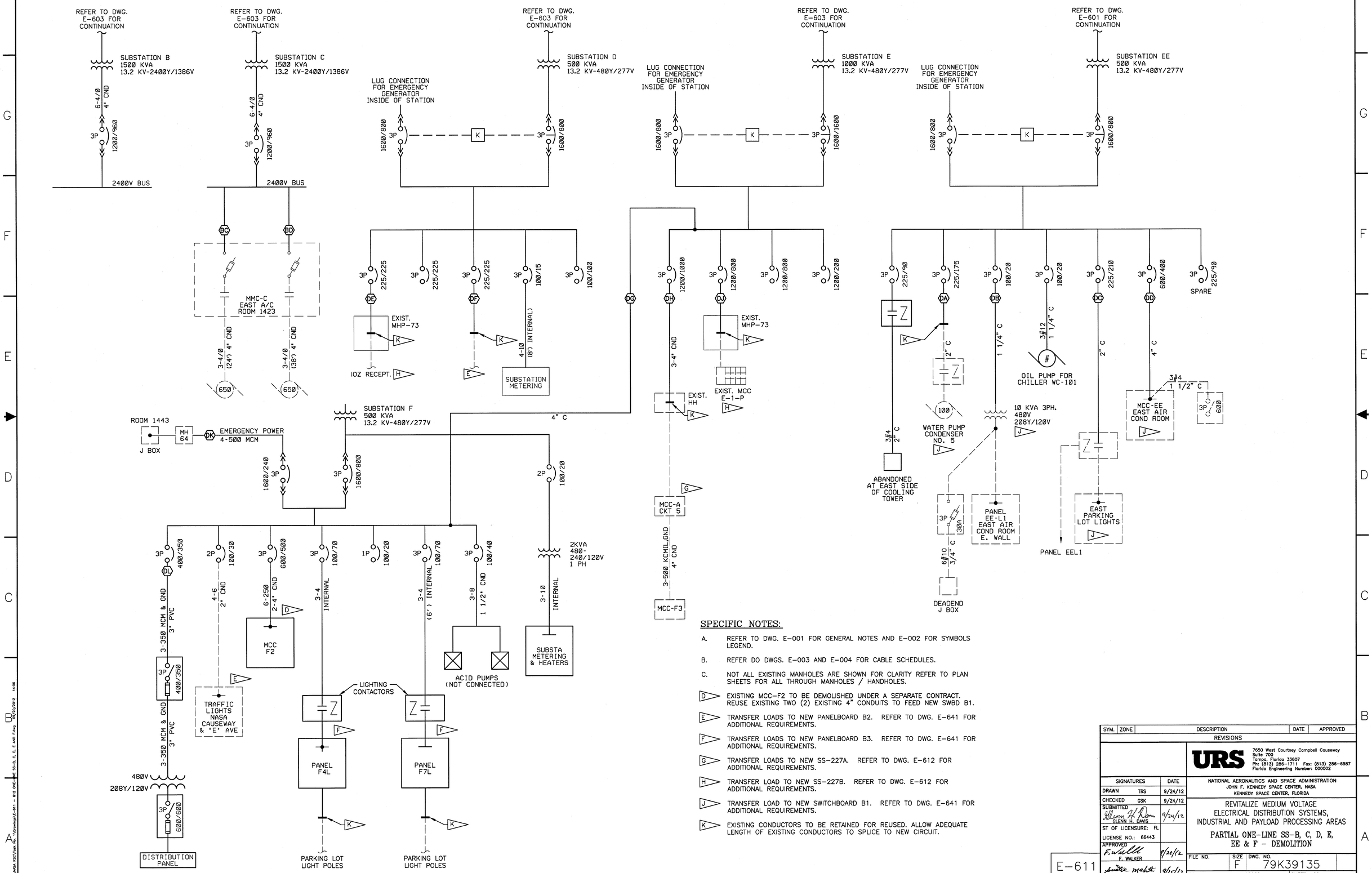

SPECIFIC NOTES:

A. REFER TO DWG. E-001 FOR GENERAL NOTES AND E-002 FOR SYMBOLS LEGEND.

B. REFER DO DWGS. E-003 AND E-004 FOR CABLE SCHEDULES.

C. NOT ALL EXISTING MANHOLES ARE SHOWN FOR CLARITY REFER TO PLAN SHEETS FOR ALL THROUGH MANHOLES / HANDHOLES.

D. EXISTING MCC-F2 TO BE DEMOLISHED UNDER A SEPARATE CONTRACT. REUSE EXISTING TWO (2) EXISTING 4" CONDUITS TO FEED NEW SWBD B1.

E. TRANSFER LOADS TO NEW PANELBOARD B2. REFER TO DWG. E-641 FOR ADDITIONAL REQUIREMENTS.

F. TRANSFER LOADS TO NEW PANELBOARD B3. REFER TO DWG. E-641 FOR ADDITIONAL REQUIREMENTS.

G. TRANSFER LOADS TO NEW SS-227A. REFER TO DWG. E-612 FOR ADDITIONAL REQUIREMENTS.

H. TRANSFER LOAD TO NEW SS-227B. REFER TO DWG. E-612 FOR ADDITIONAL REQUIREMENTS.

J. TRANSFER LOAD TO NEW SWITCHBOARD B1. REFER TO DWG. E-641 FOR ADDITIONAL REQUIREMENTS.

K. EXISTING CONDUCTORS TO BE RETAINED FOR REUSED. ALLOW ADEQUATE LENGTH OF EXISTING CONDUCTORS TO SPLICE TO NEW CIRCUIT.

SYM.	ZONE	DESCRIPTION	DATE	APPROVED
		REVISIONS		

URS
7650 West Courtney Campbell Causeway
Suite 700
Tampa, Florida 33607
Ph: (813) 286-1711 Fax: (813) 286-6587
Florida Engineering Number: 000002

SIGNATURES		DATE
DRAWN	TRS	9/24/12
CHECKED	GSK	9/24/12
SUBMITTED	GLENN H. DAVIS	9/24/12
ST OF LICENSURE: FL		
LICENSE NO.: 66443		
APPROVED	F. WALKER	9/24/12
	S. MEHTA	9/25/12

NATIONAL AERONAUTICS AND SPACE ADMINISTRATION
JOHN F. KENNEDY SPACE CENTER, NASA
KENNEDY SPACE CENTER, FLORIDA

REVITALIZE MEDIUM VOLTAGE ELECTRICAL DISTRIBUTION SYSTEMS, INDUSTRIAL AND PAYLOAD PROCESSING AREAS

PARTIAL ONE-LINE SS-B, C, D, E, EE & F - DEMOLITION

E-611

FILE NO. | SIZE F | DWG. NO. 79K39135

PCN NO. 98860 | SHEET 82

KSC FORM 1-11A (REV 6/91) (C/G 12/93)

NOTICE – WHEN GOVERNMENT DRAWINGS, SPECIFICATIONS, OR OTHER DATA ARE USED FOR ANY PURPOSE OTHER THAN IN CONNECTION WITH A DEFINITELY RELATED GOVERNMENT PROCUREMENT OPERATION, THE UNITED STATES GOVERNMENT THEREBY INCURS NO RESPONSIBILITY NOR ANY OBLIGATION WHATSOEVER; AND THE FACT THAT THE GOVERNMENT MAY HAVE FORMULATED, FURNISHED, OR IN ANY WAY SUPPLIED THE SAID DRAWINGS, SPECIFICATIONS, OR OTHER DATA IS NOT TO BE REGARDED BY IMPLICATION OR OTHERWISE AS IN ANY MANNER LICENSING THE HOLDER OR ANY OTHER PERSON OR CORPORATION, OR CONVEYING ANY RIGHTS OR PERMISSION TO MANUFACTURE, USE, OR SELL ANY PATENTED INVENTION THAT MAY IN ANY WAY BE RELATED THERETO.

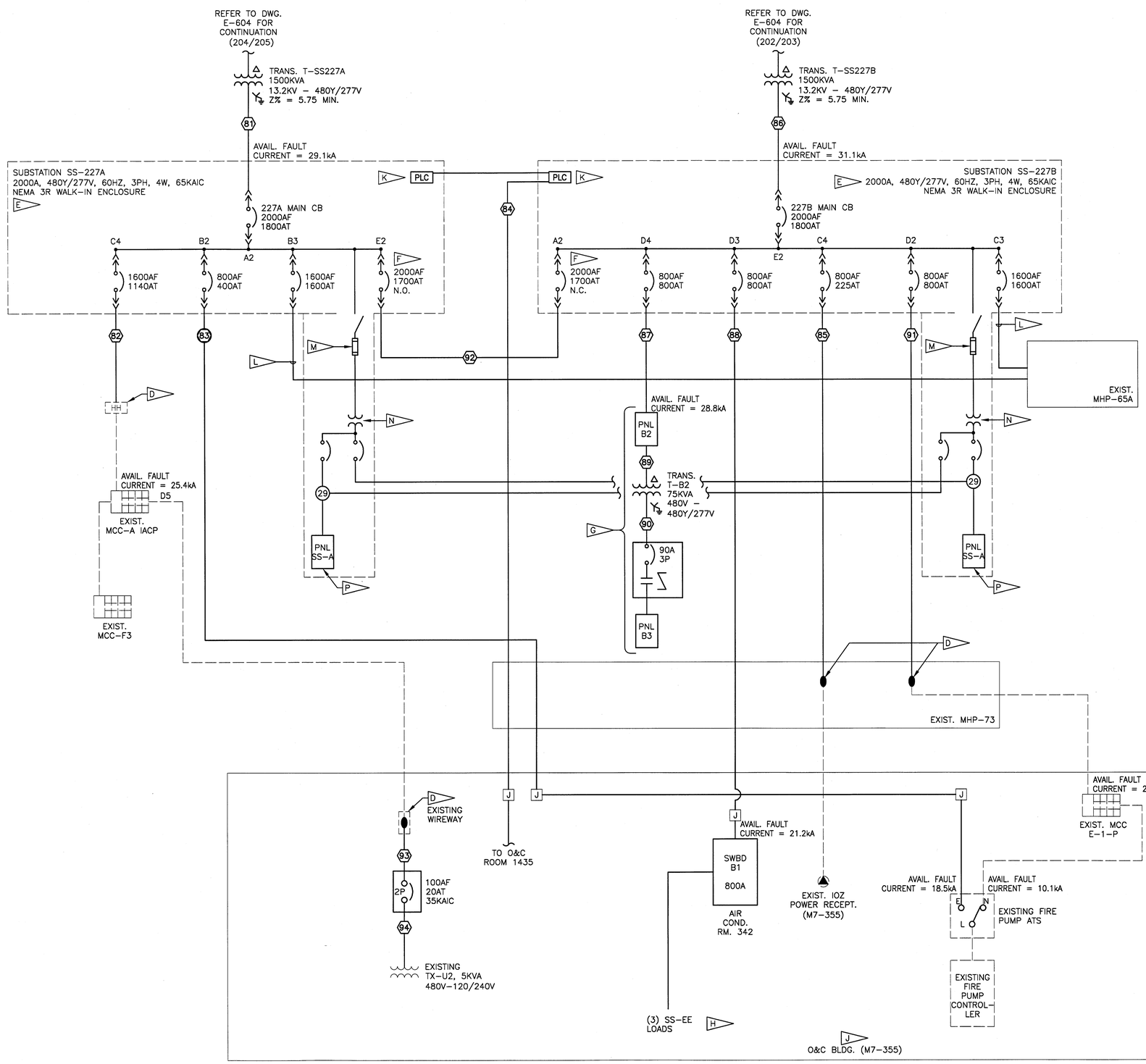

SPECIFIC NOTES:

A. REFER TO DWG. E-001 FOR GENERAL NOTES AND E-002 FOR SYMBOLS LEGEND.

B. REFER DO DWGS. E-003 AND E-004 FOR CABLE SCHEDULES.

C. NOT ALL EXISTING MANHOLES ARE SHOWN FOR CLARITY REFER TO DWGS. E-412, E-413, AND E-503 FOR ADDITIONAL REQUIREMENTS.

D. PROVIDE SPLICE TO EXISTING CONDUCTORS IN MANHOLE, HANDHOLE, OR WIREWAY, AS INDICATED.

E. REFER TO DETAILS 5 AND 6 ON DWG. E-501 FOR SWITCHGEAR ELEVATION. ALL BREAKERS ARE ELECTRICALLY OPERATED UNDER PLC CONTROL. METERING, INSTRUMENT TRANSFORMERS, AND PROTECTIVE RELAYS ARE NOT INDICATED ON THE SINGLE LINE; REFER TO SPECIFICATIONS FOR DETAILED REQUIREMENTS.

F. THE SS-227A TIE CB IS NORMALLY OPEN UNDER PLC CONTROL IN AUTOMATIC SOURCE TRANSFER MODE. THE SS-227B TIE CB IS NORMALLY CLOSED AND MANUALLY OPERATED. BOTH MAIN CIRCUIT BREAKERS, 227A AND 227B, ARE NORMALLY CLOSED UNDER PLC CONTROL IN AUTOMATIC SOURCE TRANSFER MODE.

G. RECONNECT EXISTING SUBSTATION SS-D AND SS-F LOADS. REFER TO DWG. E-413 AND PANEL SCHEDULES ON DWG. E-641.

H. RECONNECT EXISTING SUBSTATION SS-EE LOADS. REFER TO PARTIAL PLAN ON DWG. E-423 AND SWITCHBOARD SCHEDULE ON DWG. E-641.

J. REFER TO DWGS. E-422 THRU E-425 FOR ADDITIONAL REQUIREMENTS INSIDE O&C BLDG. (M7-355).

K. REFER TO DWG. E-635 FOR THE SYSTEM ARCHITECTURE DIAGRAMS.

L. PROVIDE EMPTY/SPARE CONDUIT(S) WITH PULL ROPE AS INDICATED ON PLAN SHEETS.

M. PROVIDE 30A/2P FUSE PULLOUT WITH 30A FUSES.

N. PROVIDE INTEGRAL 15KVA, 480V–120/240V, 1 PHASE CONTROL POWER TRANSFORMER.

P. PROVIDE INTEGRAL PANELBOARD, REFER TO E-641 FOR ADDITIONAL REQUIREMENTS.

R. ALL EQUIPMENT SHOWN ON DIAGRAM IS NEW (TO BE PROVIDED BY CONTRACTOR), UNLESS SPECIFICALLY INDICATED AS EXISTING.

SYM.	ZONE	DESCRIPTION	DATE	APPROVED

REVISIONS

URS
7650 West Courtney Campbell Causeway
Suite 700
Tampa, Florida 33607
Ph: (813) 286-1711 Fax: (813) 286-6587
Florida Engineering Number: 000002

SIGNATURES		DATE
DRAWN	TRS	9/24/12
CHECKED	GSK	9/24/12
SUBMITTED	GLENN H. DAVIS	9/24/12
ST OF LICENSURE: FL		
LICENSE NO.: 66443		
APPROVED	F. WALKER	9/24/12
	S. MEHTA	9/25/12

NATIONAL AERONAUTICS AND SPACE ADMINISTRATION
JOHN F. KENNEDY SPACE CENTER, NASA
KENNEDY SPACE CENTER, FLORIDA

REVITALIZE MEDIUM VOLTAGE ELECTRICAL DISTRIBUTION SYSTEMS, INDUSTRIAL AND PAYLOAD PROCESSING AREAS

PARTIAL ONE-LINE SS 227A AND SS 227B – MODIFIED

FILE NO.	SIZE	DWG. NO.
	F	79K39135
PCN NO. 98860		SHEET 83

E-612

T:\NASA KSC\Task No. 1\Drawings\E-611 – 612 ONE LINE SS-B, C, D, E AND F.dwg 09/25/2012 14:08

KSC FORM 1-11A (REV 6/91) (C/G 12/93)

NOTICE – WHEN GOVERNMENT DRAWINGS, SPECIFICATIONS, OR OTHER DATA ARE USED FOR ANY PURPOSE OTHER THAN IN CONNECTION WITH A DEFINITELY RELATED GOVERNMENT PROCUREMENT OPERATION, THE UNITED STATES GOVERNMENT THEREBY INCURS NO RESPONSIBILITY NOR ANY OBLIGATION WHATSOEVER; AND, THE FACT THAT THE GOVERNMENT MAY HAVE FORMULATED, FURNISHED, OR IN ANY WAY SUPPLIED THE SAID DRAWINGS, SPECIFICATIONS, OR OTHER DATA, IS NOT TO BE REGARDED BY IMPLICATION OR OTHERWISE AS IN ANY MANNER LICENSING THE HOLDER OR ANY OTHER PERSON OR CORPORATION, OR CONVEYING ANY RIGHTS OR PERMISSION TO MANUFACTURE, USE, OR SELL ANY PATENTED INVENTION THAT MAY IN ANY WAY BE RELATED THERETO.

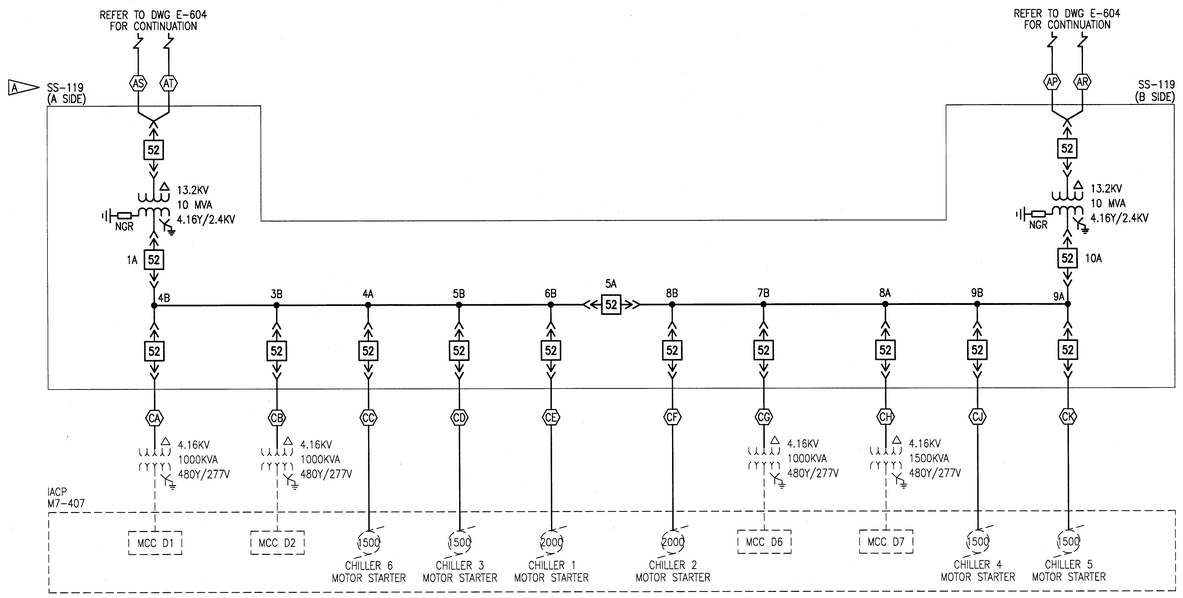

REFER TO DRAWINGS E-431 AND -432 FOR EQUIPMENT LOCATIONS.

SPECIFIC NOTES:

A. REFER TO DWG E-001 FOR GENERAL NOTES AND E-002 FOR SYMBOLS LEGEND.

B. REFER TO DWG E-003 FOR EXISTING CABLE SCHEDULE.

C. DEMOLISH EXISTING SUBSTATION SS-119 IN ITS ENTIRETY. COMPLETE THIS DEMOLITION WORK AFTER NEW SUBSTATIONS SS-119A AND SS-119B ARE FULLY OPERATIONAL AND ALL EXISTING SUBSTATION SS-119 LOADS ARE TRANSFERRED TO NEW SUBSTATIONS SS-119A AND SS-119B. DEMOLISH EXISTING MV CABLES IN PHASES AS EXISTING LOADS ARE TRANSFERRED TO NEW SUBSTATIONS.

SYM.	ZONE	DESCRIPTION	DATE	APPROVED

REVISIONS

URS
7650 West Courtney Campbell Causeway
Suite 700
Tampa, Florida 33607
Ph: (813) 286-1711 Fax: (813) 286-6587
Florida Engineering Number: 000002

SIGNATURES		DATE
DRAWN	TRS	9/24/12
CHECKED	GHD	9/24/12
SUBMITTED	GARRET KERCZ	9/24/12
ST OF LICENSURE: FL		
LICENSE NO.: 54952		
APPROVED	F. WALKER	9/24/12
	S. MEHTA	9/25/12

NATIONAL AERONAUTICS AND SPACE ADMINISTRATION
JOHN F. KENNEDY SPACE CENTER, NASA
KENNEDY SPACE CENTER, FLORIDA

REVITALIZE MEDIUM VOLTAGE ELECTRICAL DISTRIBUTION SYSTEMS, INDUSTRIAL AND PAYLOAD PROCESSING AREAS
ONE LINE DIAGRAM – SUBSTATION SS-119 – EXISTING

FILE NO.	SIZE	DWG. NO.
	F	79K39135
PCN NO. 98860		SHEET 84

E-621

KSC FORM 1-11A (REV 6/91) (C/G 8/93)
T:\KSA KSC\Task No. 1\Drawings\E-621-623 ONE LINE DWG\RAWS.dwg 09/20/2012 TLOS

NOTICE – WHEN GOVERNMENT DRAWINGS, SPECIFICATIONS, OR OTHER DATA ARE USED FOR ANY PURPOSE OTHER THAN IN CONNECTION WITH A DEFINITELY RELATED GOVERNMENT PROCUREMENT OPERATION, THE UNITED STATES GOVERNMENT THEREBY INCURS NO RESPONSIBILITY NOR ANY OBLIGATION WHATSOEVER; AND THE FACT THAT THE GOVERNMENT MAY HAVE FORMULATED, FURNISHED, OR IN ANY WAY SUPPLIED THE SAID DRAWINGS, SPECIFICATIONS, OR OTHER DATA IS NOT TO BE REGARDED BY IMPLICATION OR OTHERWISE AS IN ANY MANNER LICENSING THE HOLDER OR ANY OTHER PERSON OR CORPORATION, OR CONVEYING ANY RIGHTS OR PERMISSION TO MANUFACTURE, USE, OR SELL ANY PATENTED INVENTION THAT MAY IN ANY WAY BE RELATED THERETO.

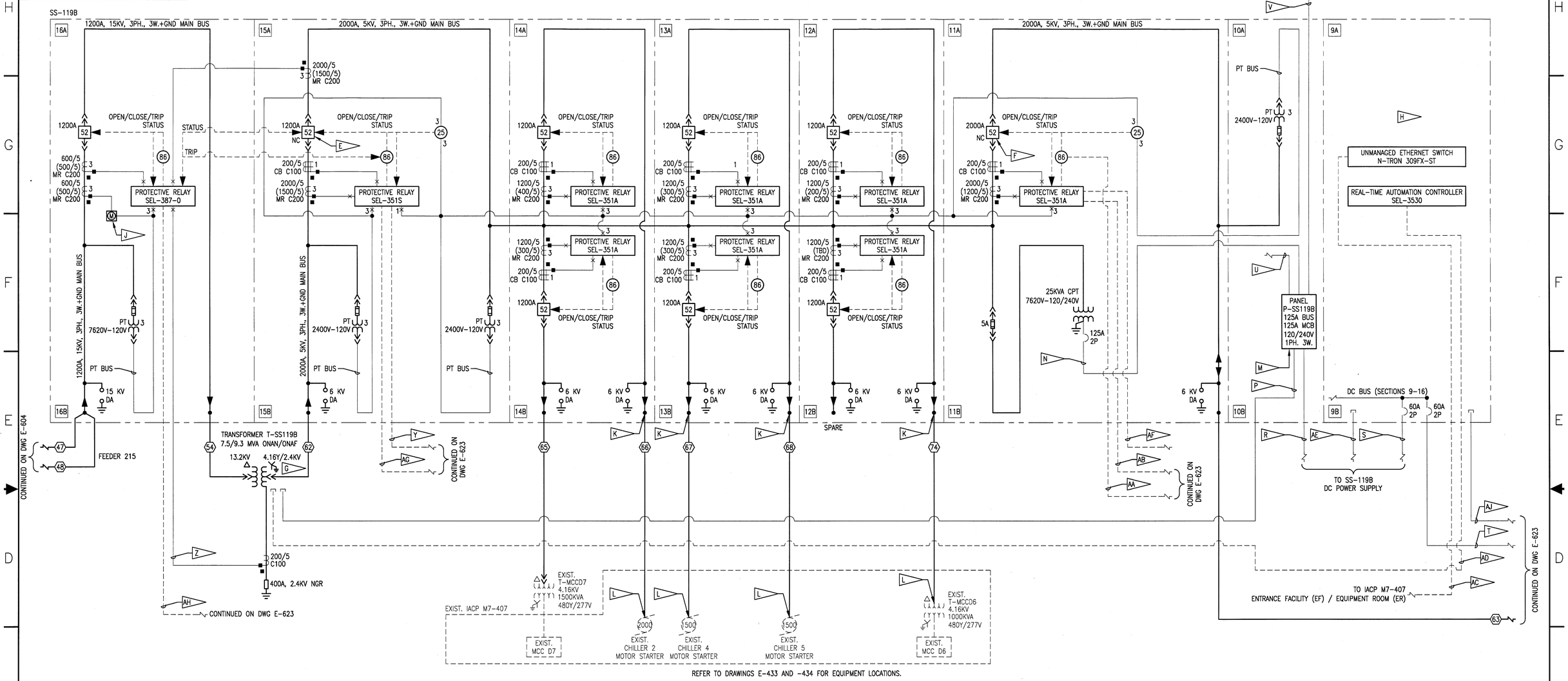

REFER TO DRAWINGS E-433 AND -434 FOR EQUIPMENT LOCATIONS.

SPECIFIC NOTES:

A. REFER TO DWG E-002 FOR LEGEND.

B. REFER TO DWG E-004 FOR MODIFIED CABLE SCHEDULE.

C. REFER TO DWG E-632 FOR METERING SYSTEM ARCHITECTURE DIAGRAMS.

D. REFER TO DWG E-634 FOR PROTECTIVE RELAY SYSTEM ARCHITECTURE DIAGRAM.

E. MAIN CIRCUIT BREAKER 15A IS NORMALLY CLOSED WHEN SUBSTATION IS IN NORMAL DOUBLE-ENDED CONFIGURATION.

F. TIE BUS CIRCUIT BREAKER 11A IS NORMALLY CLOSED WHEN SUBSTATION IS IN NORMAL DOUBLE-ENDED CONFIGURATION.

G. BOND MV CABLE CONCENTRIC NEUTRALS TO THE EARTH GROUND SIDE OF THE NEUTRAL GROUND RESISTOR (NGR).

H. UTILIZE THIS COMPARTMENT FOR TELEMETRY AND COMMUNICATIONS EQUIPMENT. REFER TO SYSTEM ARCHITECTURE DIAGRAM ON DRAWING E-633 FOR ADDITIONAL CABLING REQUIREMENTS INTERNAL TO SWITCHGEAR.

J. PROVIDE ELECTRICAL POWER MONITORING SYSTEM.

K. TERMINATE AND GROUND THE MV CABLE TAPE SHIELD AT THIS END.

L. TERMINATE, BUT DO NOT GROUND, THE MV CABLE TAPE SHIELDS AT THIS END. INSULATE MV CABLE TAPE SHIELD TERMINATIONS AT THIS END VIA APPLICATION OF APPROVED EPR ELECTRICAL TAPE LISTED BY THE MANUFACTURER FOR INSULATING/JACKETING MV CABLE SPLICES.

M. REFER TO DWG E-641 FOR PANEL SCHEDULE.

N. PROVIDE (2) #2 PH., (1) #2 NEUT., AND (1) #6 GND.

P. PROVIDE (2) #10 PH. RHW-2, (1) #10 NEUT. RHW-2, AND (1) #10 GND RHW-2 BETWEEN PANEL P-SS119B AND TRANSFORMER T-SS119B FOR COOLING FANS. REFER TO DRAWING E-502 FOR CONDUIT REQUIREMENTS.

SPECIFIC NOTES CONT...

R. PROVIDE (2) #8 PH. RHW-2 AND (1) #10 GND RHW-2 BETWEEN PANEL P-SS119B AND SS-119B DC POWER SUPPLY. REFER TO DRAWING E-502 FOR CONDUIT REQUIREMENTS.

S. PROVIDE (2) #6 DC +/- RHW-2 AND (1) #8 GND RHW-2 BETWEEN SS-119B DC POWER SUPPLY AND SS-119B DC BUS. REFER TO DRAWING E-502 FOR CONDUIT REQUIREMENTS.

T. PROVIDE (2) #6 DC +/- RHW-2 AND (1) #8 GND RHW-2 BETWEEN SS-119A DC BUS AND SS-119B DC BUS. REFER TO DRAWING E-502 FOR CONDUIT REQUIREMENTS.

U. PROVIDE BRANCH CIRCUITS FOR HEATERS INSIDE SWITCHGEAR PER APPROVED SHOP DRAWINGS.

V. PROVIDE BRANCH CIRCUITS FOR SUBSTATION HOUSING LOADS (e.g. CONVENIENCE RECEPTACLES, LIGHTS, AND EXHAUST FAN) PER APPROVED SHOP DRAWINGS.

W. <NOT USED>

Y. PROVIDE EIA-232 SERIAL MIRRORED BITS COMMUNICATIONS VIA FIBER OPTIC CABLE BETWEEN SEL-351S PROTECTIVE RELAYS IN SS-119A COMPARTMENT 6A AND SS-119B COMPARTMENT 15A, PER APPROVED SHOP DRAWINGS. REFER TO DRAWING E-502 FOR CONDUIT REQUIREMENTS.

Z. PROVIDE CT WIRING BETWEEN SEL-387-0 PROTECTIVE RELAY (DEVICE 67G) IN SS-119B COMPARTMENT 16A AND TRANSFORMER T-SS119B GROUND CT. REFER TO DRAWING E-502 FOR CONDUIT REQUIREMENTS.

AA. PROVIDE TRIP SIGNAL CONTROL WIRING BETWEEN SS-119A TIE BUS CIRCUIT BREAKER SEL-351S PROTECTIVE RELAY IN SS-119A COMPARTMENT 6A AND SS-119B TIE BUS CIRCUIT BREAKER DEVICE 86 IN SS-119B COMPARTMENT 11A. INTERLOCK TIE BUS CIRCUIT BREAKERS SUCH THAT BOTH BREAKERS TRIP WHENEVER EITHER BREAKER PROTECTIVE RELAY TRIPS. REFER TO DRAWING E-502 FOR CONDUIT REQUIREMENTS.

SPECIFIC NOTES CONT...

AB. PROVIDE TRIP SIGNAL CONTROL WIRING BETWEEN SS-119B TIE BUS CIRCUIT BREAKER SEL-351A PROTECTIVE RELAY IN SS-119B COMPARTMENT 11A AND SS-119A TIE BUS CIRCUIT BREAKER DEVICE 86 IN SS-119A COMPARTMENT 6A. INTERLOCK TIE BUS CIRCUIT BREAKERS SUCH THAT BOTH BREAKERS TRIP WHENEVER EITHER BREAKER PROTECTIVE RELAY TRIPS. REFER TO DRAWING E-502 FOR CONDUIT REQUIREMENTS.

AC. PROVIDE ETHERNET COMMUNICATIONS VIA FIBER OPTIC CABLE BETWEEN IACP M7-407 ENTRANCE FACILITY (EF)/ EQUIPMENT ROOM (ER) AND SS-119B COMPARTMENT 9A, FOR METERING AND PROTECTIVE RELAY SYSTEMS COMMUNICATIONS WITH KCCS. REFER TO DRAWING E-502 FOR CONDUIT REQUIREMENTS.

AD. PROVIDE WIRING FOR TRANSFORMER T-SS119B TELEMETRY PER APPROVED SHOP DRAWINGS. REFER TO DRAWING E-502 FOR CONDUIT REQUIREMENTS.

AE. PROVIDE WIRING FOR SS-119B DC POWER SUPPLY BATTERY CHARGER TELEMETRY PER APPROVED SHOP DRAWINGS. REFER TO DRAWING E-502 FOR CONDUIT REQUIREMENTS.

AF. PROVIDE EIA-232 WITH IRIG-B SERIAL COMMUNICATIONS VIA FIBER OPTIC CABLE BETWEEN SEL-3530 REAL-TIME AUTOMATION CONTROLLER AND SEL-351A PROTECTIVE RELAY IN SS-119A COMPARTMENT 8A AND SS-119B COMPARTMENT 11A, RESPECTIVELY, PER APPROVED SHOP DRAWINGS. REFER TO DRAWING E-502 FOR CONDUIT REQUIREMENTS.

AG. PROVIDE EIA-232 WITH IRIG-B SERIAL COMMUNICATIONS VIA FIBER OPTIC CABLE BETWEEN SEL-3530 REAL-TIME AUTOMATION CONTROLLER AND SEL-351S PROTECTIVE RELAY IN SS-119A COMPARTMENT 8A AND SS-119B COMPARTMENT 15A, RESPECTIVELY, PER APPROVED SHOP DRAWINGS. REFER TO DRAWING E-502 FOR CONDUIT REQUIREMENTS.

AH. PROVIDE EIA-232 WITH IRIG-B SERIAL COMMUNICATIONS VIA FIBER OPTIC CABLE BETWEEN SEL-3530 REAL-TIME AUTOMATION CONTROLLER AND SEL-387-0 PROTECTIVE RELAY IN SS-119A COMPARTMENT 8A AND SS-119B COMPARTMENT 16A, RESPECTIVELY, PER APPROVED SHOP DRAWINGS. REFER TO DRAWING E-502 FOR CONDUIT REQUIREMENTS.

SPECIFIC NOTES CONT...

AJ. PROVIDE EMPTY/SPARE CONDUITS WITH PULL ROPE BETWEEN SS-119A COMPARTMENT 8A AND SS-119B COMPARTMENT 9A, FOR FUTURE USE BY THE GOVERNMENT. REFER TO DRAWING E-502 FOR CONDUIT REQUIREMENTS.

SYM.	ZONE	DESCRIPTION	DATE	APPROVED
		REVISIONS		

URS
7650 West Courtney Campbell Causeway
Suite 700
Tampa, Florida 33607
Ph: (813) 286-1711 Fax: (813) 286-6587
Florida Engineering Number: 000002

SIGNATURES		DATE
DRAWN	TRS	9/24/12
CHECKED	GHD	9/24/12
SUBMITTED	GARRET KERN	9/24/12
ST OF LICENSURE: FL		
LICENSE NO.: 54952		
APPROVED	E. WALKER	9/25/12
	S. MEHTA	9/25/12

NATIONAL AERONAUTICS AND SPACE ADMINISTRATION
JOHN F. KENNEDY SPACE CENTER, NASA
KENNEDY SPACE CENTER, FLORIDA

REVITALIZE MEDIUM VOLTAGE ELECTRICAL DISTRIBUTION SYSTEMS, INDUSTRIAL AND PAYLOAD PROCESSING AREAS

ONE LINE DIAGRAM – SUBSTATION SS-119B

E-622

FILE NO. | SIZE F | DWG. NO. 79K39135

PCN NO. 98860 | SHEET 85

KSC FORM 1-11A (REV 6/91) (C/G 12/93)

NOTICE – WHEN GOVERNMENT DRAWINGS, SPECIFICATIONS OR OTHER DATA ARE USED FOR ANY PURPOSE OTHER THAN IN CONNECTION WITH A DEFINITELY RELATED GOVERNMENT PROCUREMENT OPERATION, THE UNITED STATES GOVERNMENT THEREBY INCURS NO RESPONSIBILITY NOR ANY OBLIGATION WHATSOEVER; AND THE FACT THAT THE GOVERNMENT MAY HAVE FORMULATED, FURNISHED, OR IN ANY WAY SUPPLIED THE SAID DRAWINGS, SPECIFICATIONS OR OTHER DATA IS NOT TO BE REGARDED BY IMPLICATION OR OTHERWISE AS IN ANY MANNER LICENSING THE HOLDER OR ANY OTHER PERSON OR CORPORATION, OR CONVEYING ANY RIGHTS OR PERMISSION TO MANUFACTURE, USE, OR SELL ANY PATENTED INVENTION THAT MAY IN ANY WAY BE RELATED THERETO.

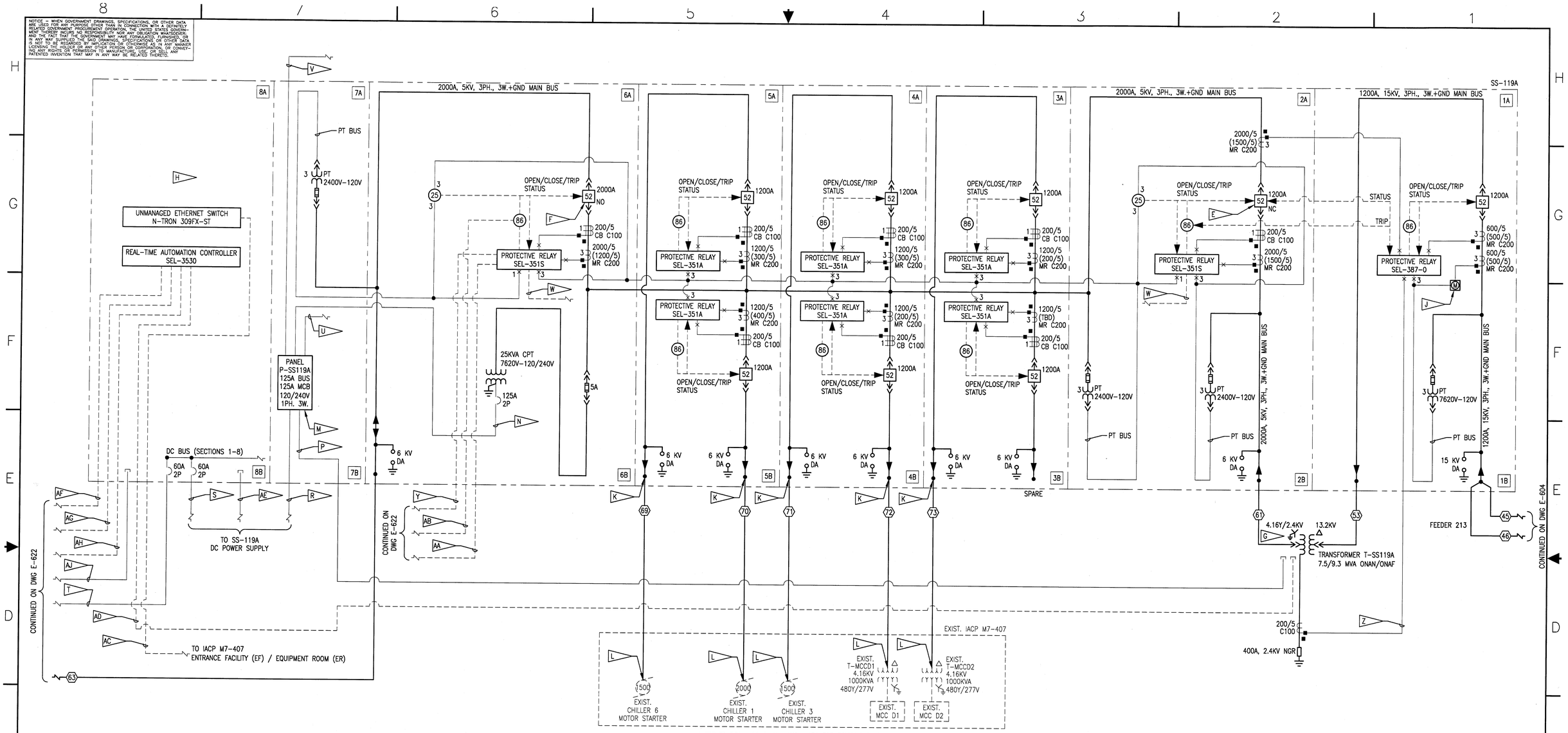

REFER TO DRAWINGS E-433 AND -434 FOR EQUIPMENT LOCATIONS.

SPECIFIC NOTES:

A. REFER TO DWG E-002 FOR LEGEND.

B. REFER TO DWG E-004 FOR MODIFIED CABLE SCHEDULE.

C. REFER TO DWG E-632 FOR METERING SYSTEM ARCHITECTURE DIAGRAMS.

D. REFER TO DWG E-633 FOR PROTECTIVE RELAY SYSTEM ARCHITECTURE DIAGRAM.

E. MAIN CIRCUIT BREAKER 2A IS NORMALLY CLOSED WHEN SUBSTATION IS IN NORMAL DOUBLE-ENDED CONFIGURATION.

F. TIE BUS CIRCUIT BREAKER 6A IS NORMALLY OPEN WHEN SUBSTATION IS IN NORMAL DOUBLE-ENDED CONFIGURATION.

G. BOND MV CABLE CONCENTRIC NEUTRALS TO THE EARTH GROUND SIDE OF THE NEUTRAL GROUND RESISTOR (NGR).

H. UTILIZE THIS COMPARTMENT FOR TELEMETRY AND COMMUNICATIONS EQUIPMENT. REFER TO SYSTEM ARCHITECTURE DIAGRAM ON DRAWING E-633 FOR ADDITIONAL CABLING REQUIREMENTS INTERNAL TO SWITCHGEAR.

J. PROVIDE ELECTRICAL POWER MONITORING SYSTEM.

K. TERMINATE AND GROUND THE MV CABLE TAPE SHIELD AT THIS END.

L. TERMINATE, BUT DO NOT GROUND, THE MV CABLE TAPE SHIELDS AT THIS END. INSULATE MV CABLE TAPE SHIELD TERMINATIONS AT THIS END VIA APPLICATION OF APPROVED EPR ELECTRICAL TAPE LISTED BY THE MANUFACTURER FOR INSULATING/JACKETING MV CABLE SPLICES.

M. REFER TO DWG E-641 FOR PANEL SCHEDULE.

N. PROVIDE (2) #2 PH., (1) #2 NEUT., AND (1) #6 GND.

P. PROVIDE (2) #10 PH. RHW-2, (1) #10 NEUT. RHW-2, AND (1) #10 GND RHW-2 BETWEEN PANEL P-SS119A AND TRANSFORMER T-SS119A FOR COOLING FANS. REFER TO DRAWING E-502 FOR CONDUIT REQUIREMENTS.

SPECIFIC NOTES CONT...

R. PROVIDE (2) #8 PH. RHW-2 AND (1) #10 GND RHW-2 BETWEEN PANEL P-SS119A AND SS-119A DC POWER SUPPLY. REFER TO DRAWING E-502 FOR CONDUIT REQUIREMENTS.

S. PROVIDE (2) #6 DC +/- RHW-2 AND (1) #8 GND RHW-2 BETWEEN SS-119A DC POWER SUPPLY AND SS-119A DC BUS. REFER TO DRAWING E-502 FOR CONDUIT REQUIREMENTS.

T. PROVIDE (2) #6 DC +/- RHW-2 AND (1) #8 GND RHW-2 BETWEEN SS-119A DC BUS AND SS-119B DC BUS. REFER TO DRAWING E-502 FOR CONDUIT REQUIREMENTS.

U. PROVIDE BRANCH CIRCUITS FOR HEATERS INSIDE SWITCHGEAR PER APPROVED SHOP DRAWINGS.

V. PROVIDE BRANCH CIRCUITS FOR SUBSTATION HOUSING LOADS (e.g. CONVENIENCE RECEPTACLES, LIGHTS, AND EXHAUST FAN) PER APPROVED SHOP DRAWINGS.

W. PROVIDE MIRRORED BITS COMMUNICATIONS CABLE BETWEEN SEL-351S PROTECTIVE RELAYS IN COMPARTMENTS 2A AND 6A, PER APPROVED SHOP DRAWINGS.

Y. PROVIDE EIA-232 SERIAL MIRRORED BITS COMMUNICATIONS VIA FIBER OPTIC CABLE BETWEEN SEL-351S PROTECTIVE RELAYS IN SS-119A COMPARTMENT 6A AND SS-119B COMPARTMENT 15A, PER APPROVED SHOP DRAWINGS. REFER TO DRAWING E-502 FOR CONDUIT REQUIREMENTS.

Z. PROVIDE CT WIRING BETWEEN SEL-387-0 PROTECTIVE RELAY (DEVICE 67G) IN SS-119A COMPARTMENT 1A AND TRANSFORMER T-SS119A GROUND CT. REFER TO DRAWING E-502 FOR CONDUIT REQUIREMENTS.

AA. PROVIDE TRIP SIGNAL CONTROL WIRING BETWEEN SS-119A TIE BUS CIRCUIT BREAKER SEL-351S PROTECTIVE RELAY IN SS-119A COMPARTMENT 6A AND SS-119B TIE BUS CIRCUIT BREAKER DEVICE 86 IN SS-119B COMPARTMENT 11A. INTERLOCK TIE BUS CIRCUIT BREAKERS SUCH THAT BOTH BREAKERS TRIP WHENEVER EITHER BREAKER PROTECTIVE RELAY TRIPS. REFER TO DRAWING E-502 FOR CONDUIT REQUIREMENTS.

SPECIFIC NOTES CONT...

AB. PROVIDE TRIP SIGNAL CONTROL WIRING BETWEEN SS-119B TIE BUS CIRCUIT BREAKER SEL-351A PROTECTIVE RELAY IN SS-119B COMPARTMENT 11A AND SS-119A TIE BUS CIRCUIT BREAKER DEVICE 86 IN SS-119A COMPARTMENT 6A. INTERLOCK TIE BUS CIRCUIT BREAKERS SUCH THAT BOTH BREAKERS TRIP WHENEVER EITHER BREAKER PROTECTIVE RELAY TRIPS. REFER TO DRAWING E-502 FOR CONDUIT REQUIREMENTS.

AC. PROVIDE ETHERNET COMMUNICATIONS VIA FIBER OPTIC CABLE BETWEEN IACP M7-407 ENTRANCE FACILITY (EF)/ EQUIPMENT ROOM (ER) AND SS-119A COMPARTMENT 8A, FOR METERING AND PROTECTIVE RELAY SYSTEMS COMMUNICATIONS WITH KCCS. REFER TO DRAWING E-502 FOR CONDUIT REQUIREMENTS.

AD. PROVIDE WIRING FOR TRANSFORMER T-SS119A TELEMETRY PER APPROVED SHOP DRAWINGS. REFER TO DRAWING E-502 FOR CONDUIT REQUIREMENTS.

AE. PROVIDE WIRING FOR SS-119A DC POWER SUPPLY BATTERY CHARGER TELEMETRY PER APPROVED SHOP DRAWINGS. REFER TO DRAWING E-502 FOR CONDUIT REQUIREMENTS.

AF. PROVIDE EIA-232 WITH IRIG-B SERIAL COMMUNICATIONS VIA FIBER OPTIC CABLE BETWEEN SEL-3530 REAL-TIME AUTOMATION CONTROLLER AND SEL-351A PROTECTIVE RELAY IN SS-119A COMPARTMENT 8A AND SS-119B COMPARTMENT 11A, RESPECTIVELY, PER APPROVED SHOP DRAWINGS. REFER TO DRAWING E-502 FOR CONDUIT REQUIREMENTS.

AG. PROVIDE EIA-232 WITH IRIG-B SERIAL COMMUNICATIONS VIA FIBER OPTIC CABLE BETWEEN SEL-3530 REAL-TIME AUTOMATION CONTROLLER AND SEL-351S PROTECTIVE RELAY IN SS-119A COMPARTMENT 8A AND SS-119B COMPARTMENT 15A, RESPECTIVELY, PER APPROVED SHOP DRAWINGS. REFER TO DRAWING E-502 FOR CONDUIT REQUIREMENTS.

AH. PROVIDE EIA-232 WITH IRIG-B SERIAL COMMUNICATIONS VIA FIBER OPTIC CABLE BETWEEN SEL-3530 REAL-TIME AUTOMATION CONTROLLER AND SEL-387-0 PROTECTIVE RELAY IN SS-119A COMPARTMENT 8A AND SS-119B COMPARTMENT 16A, RESPECTIVELY, PER APPROVED SHOP DRAWINGS. REFER TO DRAWING E-502 FOR CONDUIT REQUIREMENTS.

SPECIFIC NOTES CONT...

AJ. PROVIDE EMPTY/SPARE CONDUITS WITH PULL ROPE BETWEEN SS-119A COMPARTMENT 8A AND SS-119B COMPARTMENT 9A, FOR FUTURE USE BY THE GOVERNMENT. REFER TO DRAWING E-502 FOR CONDUIT REQUIREMENTS.

SYM.	ZONE	DESCRIPTION	DATE	APPROVED
		REVISIONS		

URS
7650 West Courtney Campbell Causeway
Suite 700
Tampa, Florida 33607
Ph: (813) 286-1711 Fax: (813) 286-6587
Florida Engineering Number: 0000002

SIGNATURES		DATE
DRAWN	TRS	9/24/12
CHECKED	GHD	9/24/12
SUBMITTED	GARRET KERLY	9/24/12
ST OF LICENSURE: FL	LICENSE NO.: 54952	
APPROVED	F. WALKER	9/24/12
	S. MEHTA	9/25/12

NATIONAL AERONAUTICS AND SPACE ADMINISTRATION
JOHN F. KENNEDY SPACE CENTER, NASA
KENNEDY SPACE CENTER, FLORIDA

REVITALIZE MEDIUM VOLTAGE ELECTRICAL DISTRIBUTION SYSTEMS, INDUSTRIAL AND PAYLOAD PROCESSING AREAS

ONE LINE DIAGRAM – SUBSTATION SS-119A

E-623

FILE NO. | SIZE F | DWG. NO. 79K39135

PCN NO. 98860 | SHEET 86

KSC FORM 1-11A (REV 5/91) (C/G 12/93)

NOTICE – WHEN GOVERNMENT DRAWINGS, SPECIFICATIONS, OR OTHER DATA ARE USED FOR ANY PURPOSE OTHER THAN IN CONNECTION WITH A DEFINITELY-RELATED GOVERNMENT PROCUREMENT OPERATION, THE UNITED STATES GOVERNMENT THEREBY INCURS NO RESPONSIBILITY NOR ANY OBLIGATION WHATSOEVER; AND THE FACT THAT THE GOVERNMENT MAY HAVE FORMULATED, FURNISHED, OR IN ANY WAY SUPPLIED THE SAID DRAWINGS, SPECIFICATIONS, OR OTHER DATA, IS NOT TO BE REGARDED BY IMPLICATION OR OTHERWISE AS IN ANY MANNER LICENSING THE HOLDER OR ANY OTHER PERSON OR CORPORATION, OR CONVEYING ANY RIGHTS OR PERMISSION TO MANUFACTURE, USE, OR SELL ANY PATENTED INVENTION THAT MAY IN ANY WAY BE RELATED THERETO.

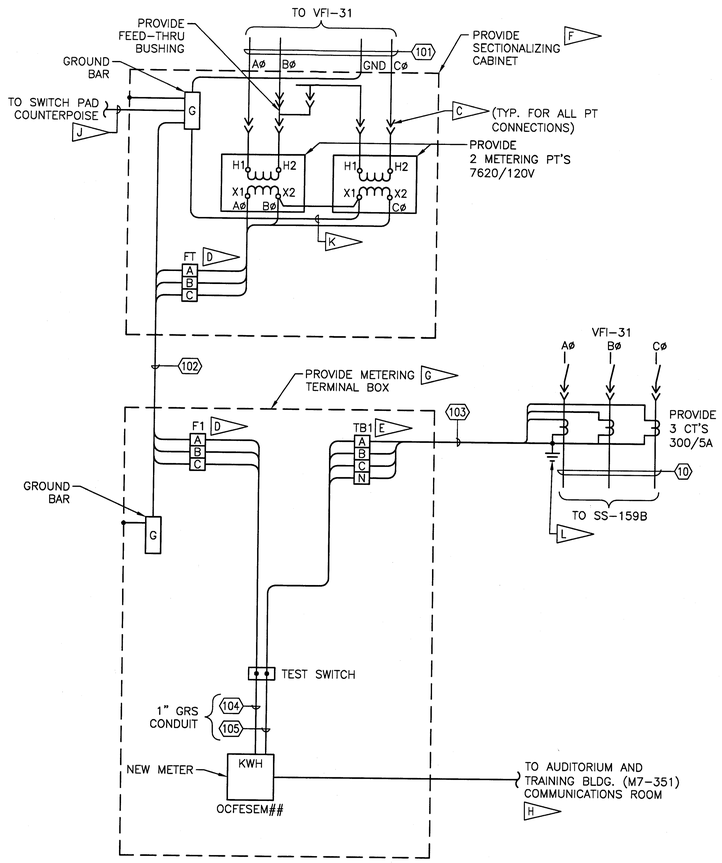

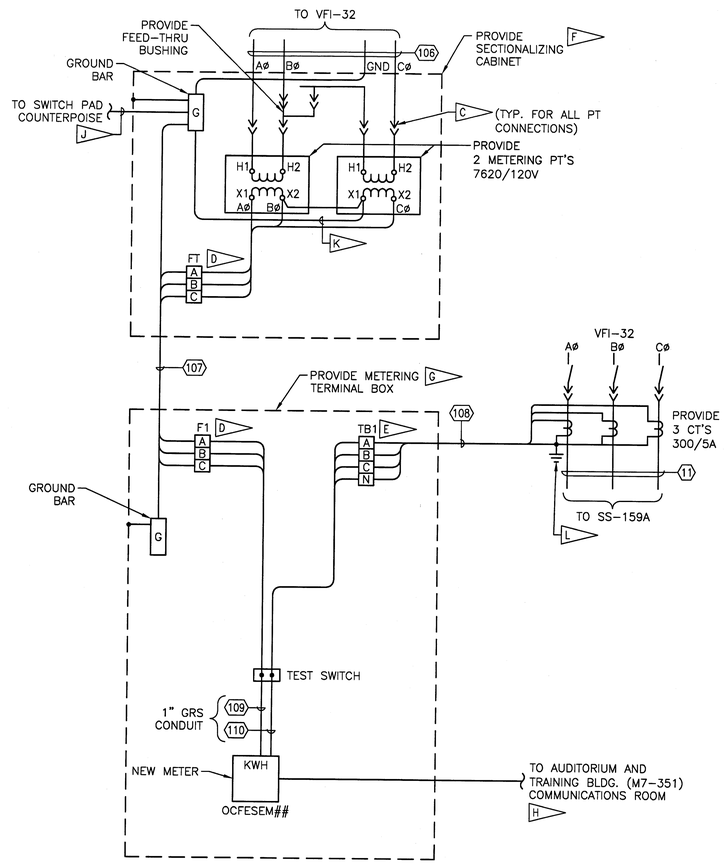

SPECIFIC NOTES:

A. REFER TO DWG. E-001 FOR GENERAL NOTES AND E-002 FOR SYMBOLS LEGEND.

B. REFER TO DWGS. E-003 AND E-004 FOR CABLE SCHEDULES.

C. PROVIDE 200A FUSED LOADBREAK ELBOW CONNECTOR. COORDINATE FUSE NOMINAL CURRENT RATING WITH PT PROVIDER'S RECOMMENDED PRACTICES.

D. PROVIDE 30A/3P FUSE BLOCK WITH INTEGRAL 10A FUSES.

E. PROVIDE SHORTING TERMINAL BLOCK.

F. REFER TO DWG. E-403 FOR LOCATION AND ADDITIONAL REQUIREMENTS.

G. REFER TO SPECIFICATION SECTION 26 05 71.00 40.

H. REFER TO DWG. E-414 FOR ADDITIONAL REQUIREMENTS.

J. PROVIDE #4/0 AWG GROUNDING CONDUCTOR BETWEEN GROUND BAR AND SWITCH PAD COUNTERPOISE GROUNDING CONDUCTOR.

K. PROVIDE #6 AWG GROUNDING ELECTRODE CONDUCTOR BETWEEN PT SECONDARY AND GROUND BAR.

L. PROVIDE #10 AWG GROUNDING CONDUCTOR BETWEEN CTS AND VFI ENCLOSURE GROUND BUS.

SYM.	ZONE	DESCRIPTION	DATE	APPROVED

REVISIONS

URS
7650 West Courtney Campbell Causeway
Suite 700
Tampa, Florida 33607
Ph: (813) 286-1711 Fax: (813) 286-6587
Florida Engineering Number: 000002

SIGNATURES		DATE
DRAWN	TRS	9/24/12
CHECKED	GSK	9/24/12
SUBMITTED	GLENN H. DAVIS	9/24/12
ST OF LICENSURE: FL		
LICENSE NO.: 66443		
APPROVED	F. WALKER	9/24/12
	S. MEHTA	9/25/12

NATIONAL AERONAUTICS AND SPACE ADMINISTRATION
JOHN F. KENNEDY SPACE CENTER, NASA
KENNEDY SPACE CENTER, FLORIDA

REVITALIZE MEDIUM VOLTAGE ELECTRICAL DISTRIBUTION SYSTEMS, INDUSTRIAL AND PAYLOAD PROCESSING AREAS

VFI METERING – WIRING DIAGRAM

FILE NO.	SIZE	DWG. NO.
	F	79K39135
PCN NO. 98860		SHEET 87

E-631

T:\NASA KSC\Task 05\Drawings\E-631 VFI METERING WIRING DIAGRAM.dwg 09/25/2012 14:07
KSC FORM 1-11A (REV 8/91) (C/G 12/93)

NOTICE – WHEN GOVERNMENT DRAWINGS, SPECIFICATIONS, OR OTHER DATA ARE USED FOR ANY PURPOSE OTHER THAN IN CONNECTION WITH A DEFINITELY RELATED GOVERNMENT PROCUREMENT OPERATION, THE UNITED STATES GOVERNMENT THEREBY INCURS NO RESPONSIBILITY NOR ANY OBLIGATION WHATSOEVER; AND THE FACT THAT THE GOVERNMENT MAY HAVE FORMULATED, FURNISHED, OR IN ANY WAY SUPPLIED THE SAID DRAWINGS, SPECIFICATIONS, OR OTHER DATA IS NOT TO BE REGARDED BY IMPLICATION OR OTHERWISE AS IN ANY MANNER LICENSING THE HOLDER OR ANY OTHER PERSON OR CORPORATION, OR CONVEYING ANY RIGHTS OR PERMISSION TO MANUFACTURE, USE, OR SELL ANY PATENTED INVENTION THAT MAY IN ANY WAY BE RELATED THERETO.

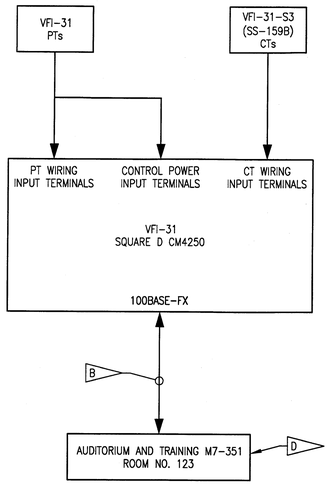

VFI-31 METERING
SYSTEM ARCHITECTURE DIAGRAM (1 / E-632)
NTS

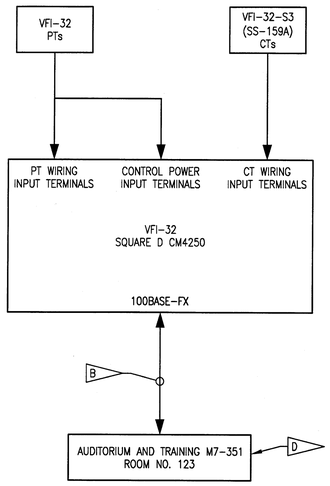

VFI-32 METERING
SYSTEM ARCHITECTURE DIAGRAM (2 / E-632)
NTS

SPECIFIC NOTES:

A. THE CONTRACTOR SHALL ARRANGE, COORDINATE, SCHEDULE, AND PAY FOR THE SERVICES OF A TELECOMMUNICATIONS CONTRACTOR TO COMPLETE THE INSTALLATION AND TESTING OF THE FOC DESCRIBED BY SPECIFIC NOTES B THROUGH D BELOW. THE TELECOMMUNICATIONS CONTRACTOR SHALL BE A FIRM WHICH IS REGULARLY AND PROFESSIONALLY ENGAGED IN THE BUSINESS OF INSTALLING AND TESTING TELECOMMUNICATIONS SYSTEMS. THE TELECOMMUNICATIONS CONTRACTOR SHALL DEMONSTRATE EXPERIENCE IN THE SUCCESSFUL COMPLETION OF TELECOMMUNICATIONS SYSTEMS INSTALLATIONS WITH THE PAST 3 YEARS. SUBMIT DOCUMENTATION FOR A MINIMUM OF THREE AND MAXIMUM OF FIVE SUCCESSFUL TELECOMMUNICATIONS SYSTEMS INSTALLATIONS FOR THE TELECOMMUNICATIONS CONTRACTOR. THE TELECOMMUNICATIONS CONTRACTOR SHALL PROVIDE KEY PERSONNEL WHO ARE REGULARLY AND PROFESSIONALLY ENGAGED IN THE BUSINESS OF INSTALLING AND TESTING TELECOMMUNICATIONS SYSTEMS. KEY PERSONNEL ASSIGNED TO COMPLETE THE TELECOMMUNICATIONS WORK OF THIS PROJECT SHALL BE BUILDING INDUSTRY CONSULTING SERVICES INTERNATIONAL (BICSI) REGISTERED CABLING INSTALLERS, TECHNICIAN LEVEL. PERFORM OPTICAL FIBER END-TO-END LINK TESTS, IN ACCORDANCE WITH TIA-568-C.3, ON EACH STRAND OF EACH FOC.

B. PROVIDE 6-STRAND 62.5/125 um MULTIMODE (OM1) INDOOR/OUTDOOR ALL DIELECTRIC RISER (OFNR) RATED BACKBONE FIBER OPTIC CABLE (FOC) CONFORMING TO ICEA S-104-696, TIA-568-C.3, UL 1666, AND NFPA 70. TERMINATE EACH END OF EACH FOC STRAND PAIR WITH A DUPLEX LC CONNECTOR FOR MATING TO KWH METER. CONTRACTOR TO VERIFY CONNECTOR TYPE WITH KWH METER PROPOSED AND APPROVED FOR USE ON THIS PROJECT.

C. PROVIDE 6-STRAND 62.5/125 um MULTIMODE (OM1) INDOOR/OUTDOOR ALL DIELECTRIC RISER (OFNR) RATED BACKBONE FIBER OPTIC CABLE (FOC) CONFORMING TO ICEA S-104-696, TIA-568-C.3, UL 1666, AND NFPA 70. TERMINATE EACH END OF EACH FOC STRAND WITH A ST CONNECTOR FOR MATING TO UNMANANAGED ETHERNET SWITCH. CONTRACTOR TO VERIFY CONNECTOR TYPE WITH UNMANANAGED ETHERNET SWITCH PROPOSED AND APPROVED FOR USE ON THIS PROJECT.

D. LEAVE 30'-0" SLACK IN FOC, NEATLY BUNDLED, COILED, AND SECURED, FOR ROUTING BY THE NASA IT GROUP.

E. PROVIDE INDUSTRIAL 4-PAIR 23 AWG CAT6 UTP CABLE. TERMINATE EACH END OF CABLE WITH AN 8-POSITION 8-CONTACT CAT6 RJ-45 CONNECTOR.

F. PROVIDE TWO INDUSTRIAL 4-PAIR 23 AWG CAT6 UTP CABLES. TERMINATE EACH END OF CABLE WITH AN 8-POSITION 8-CONTACT CAT6 RJ-45 CONNECTOR.

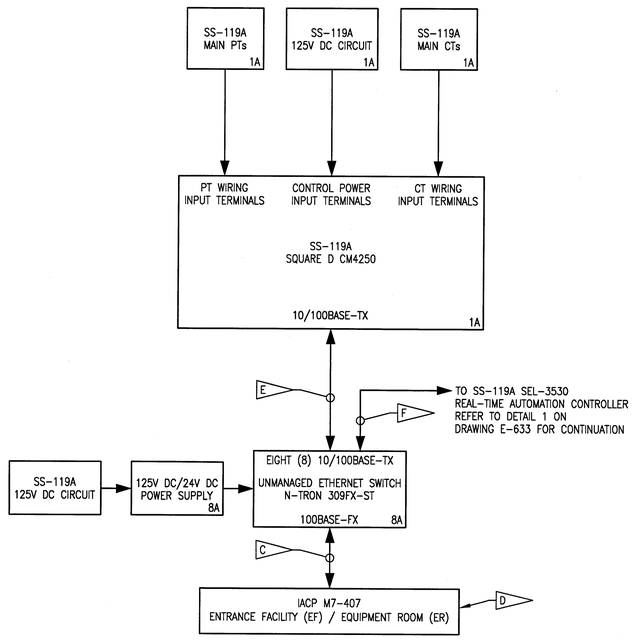

SS-119A METERING
SYSTEM ARCHITECTURE DIAGRAM (3 / E-632)
NTS

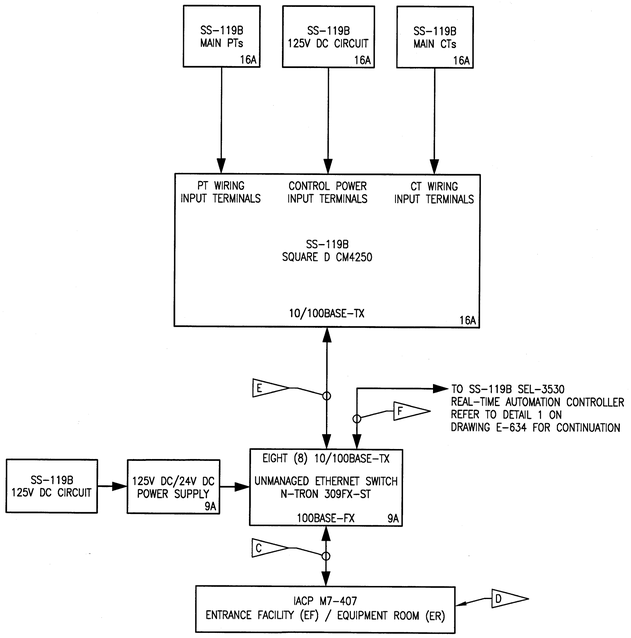

SS-119B METERING
SYSTEM ARCHITECTURE DIAGRAM (4 / E-632)
NTS

SYM.	ZONE	DESCRIPTION	DATE	APPROVED
		REVISIONS		

URS
7650 West Courtney Campbell Causeway
Suite 700
Tampa, Florida 33607
Phr (813) 286-1711 Fax: (813) 286-6587
Florida Engineering Number: 000002

SIGNATURES		DATE
DRAWN	TRS	9/24/12
CHECKED	GHD	9/24/12
SUBMITTED	GARRET KERLY	9/24/12
ST OF LICENSURE: FL		
LICENSE NO.: 54952		
APPROVED	F. WALKER	9/24/12
	S. MEHTA	9/25/12

NATIONAL AERONAUTICS AND SPACE ADMINISTRATION
JOHN F. KENNEDY SPACE CENTER, NASA
KENNEDY SPACE CENTER, FLORIDA

REVITALIZE MEDIUM VOLTAGE
ELECTRICAL DISTRIBUTION SYSTEMS,
INDUSTRIAL AND PAYLOAD PROCESSING AREAS

SYSTEM ARCHITECTURE
DIAGRAMS

E-632

FILE NO.	SIZE	DWG. NO.
	F	79K39135
PCN NO. 98860		SHEET 88

T:\Vista KSC\Task No. 1\Drawings\E-632-633 SYSTEM ARCHITECTURE DIAGRAMS.dwg 09/20/2012 14:07
KSC FORM 1-11A (REV 8/91) (C/G 2/93)

NOTICE – WHEN GOVERNMENT DRAWINGS, SPECIFICATIONS, OR OTHER DATA ARE USED FOR ANY PURPOSE OTHER THAN IN CONNECTION WITH A DEFINITELY RELATED GOVERNMENT PROCUREMENT OPERATION, THE UNITED STATES GOVERNMENT THEREBY INCURS NO RESPONSIBILITY NOR ANY OBLIGATION WHATSOEVER; AND THE FACT THAT THE GOVERNMENT MAY HAVE FORMULATED, FURNISHED, OR IN ANY WAY SUPPLIED THE SAID DRAWINGS, SPECIFICATIONS OR OTHER DATA, IS NOT TO BE REGARDED BY IMPLICATION OR OTHERWISE AS IN ANY MANNER LICENSING THE HOLDER OR ANY OTHER PERSON OR CORPORATION, OR CONVEYING ANY RIGHTS OR PERMISSION TO MANUFACTURE, USE OR SELL ANY PATENTED INVENTION THAT MAY IN ANY WAY BE RELATED THERETO.

SPECIFIC NOTES:

A. PROVIDE TWO INDUSTRIAL 4-PAIR 23 AWG CAT6 UTP CABLES. TERMINATE EACH END OF CABLE WITH AN 8-POSITION 8-CONTACT CAT6 RJ-45 CONNECTOR.

B. TERMINATE EACH FOC STRAND PAIR WITH A LC CONNECTOR FOR MATING TO SEL-3530 REAL-TIME AUTOMATION CONTROLLER.

C. LEAVE 30'-0" SLACK IN EACH FOC, NEATLY BUNDLED, COILED, AND SECURED, FOR TERMINATION BY THE NASA IT GROUP.

D. PROVIDE IRIG-B COAXIAL CABLE, SEL C953.

E. PROVIDE EIA-232 WITH IRIG-B SERIAL COMMUNICATIONS VIA COPPER CONDUCTOR CABLES, SEL C273A.

F. PROVIDE EIA-232 WITH IRIG-B SERIAL COMMUNICATIONS VIA FIBER OPTIC CABLES, SEL C808G WITH ST CONNECTORS.

G. PROVIDE EIA-232 SERIAL MIRRORED BITS COMMUNICATIONS VIA COPPER CONDUCTOR CABLE, SEL C272A.

H. PROVIDE EIA-232 SERIAL MIRRORED BITS COMMUNICATIONS VIA FIBER OPTIC CABLE, SEL C808G WITH ST CONNECTORS.

J. PROVIDE ADAPTER CABLE FOR 5-PIN EIA-485 PORT AND BNC IRIG-B CONNECTION, SEL C686.

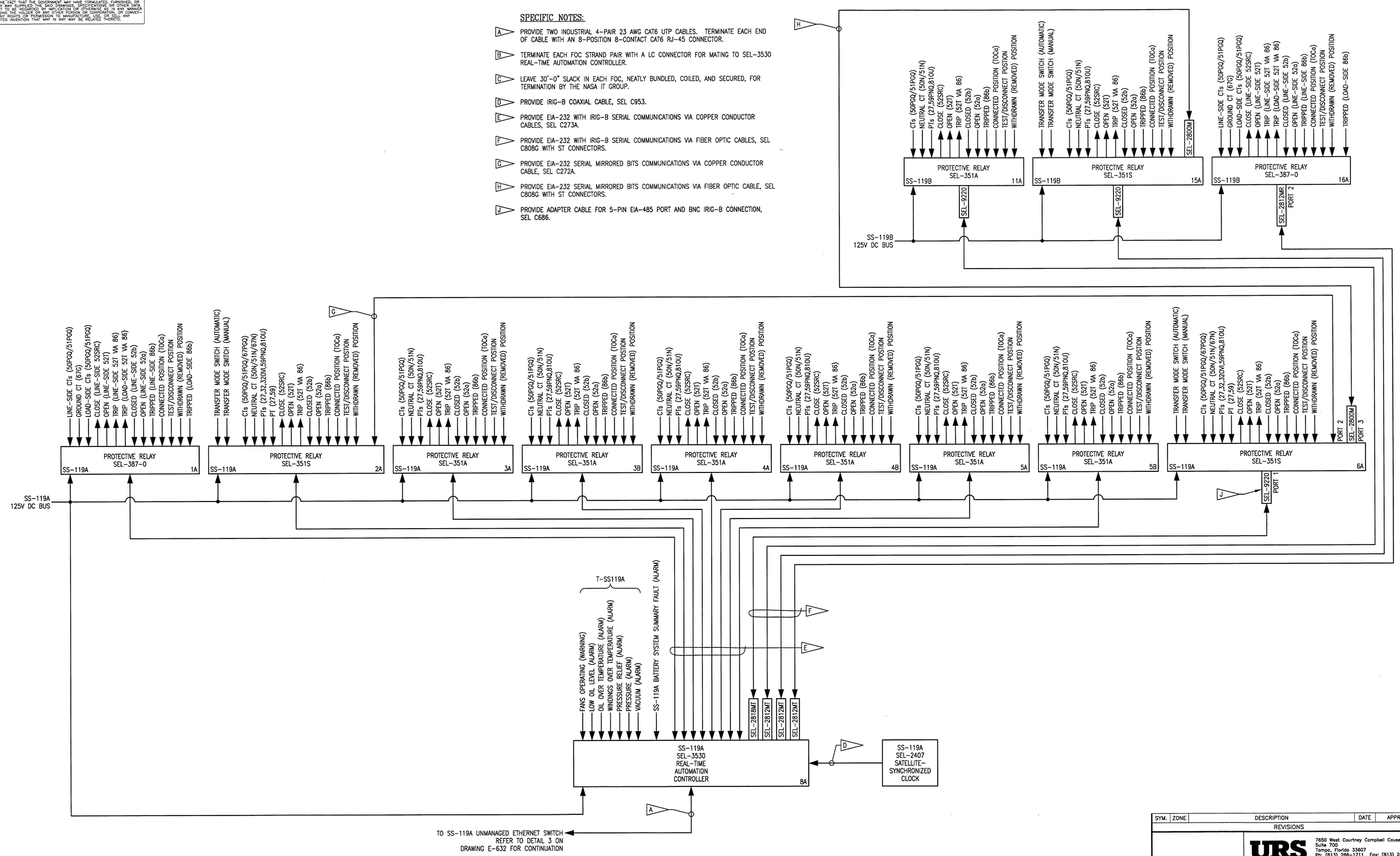

SS-119A PROTECTIVE RELAY SYSTEM ARCHITECTURE DIAGRAM

NTS

1 / E-633

SYM.	ZONE	DESCRIPTION	DATE	APPROVED

REVISIONS

URS
7650 West Courtney Campbell Causeway
Suite 700
Tampa, Florida 33607
Ph: (813) 286-1711 Fax: (813) 286-6587
Florida Engineering Number: 000002

SIGNATURES		DATE
DRAWN	TRS	9/24/12
CHECKED	GHD	9/24/12
SUBMITTED	GARRET KERLY	9/24/12
ST OF LICENSURE: FL		
LICENSE NO.: 54952		
APPROVED	F. WALKER	9/24/12
	S. MEHTA	9/25/12

NATIONAL AERONAUTICS AND SPACE ADMINISTRATION
JOHN F. KENNEDY SPACE CENTER, NASA
KENNEDY SPACE CENTER, FLORIDA

REVITALIZE MEDIUM VOLTAGE ELECTRICAL DISTRIBUTION SYSTEMS, INDUSTRIAL AND PAYLOAD PROCESSING AREAS

SYSTEM ARCHITECTURE DIAGRAMS

FILE NO.	SIZE	DWG. NO.
	F	79K39135
PCN NO. 98860		SHEET 89

E-633

T:\NASA KSC\Sub No. 1\Drawings\F-632-635 SYSTEM ARCHITECTURE DIAGRAMS.dwg 08/20/2013 14:07

KSC FORM 1-11A (REV 6/91) (C/G 12/93)

NOTICE — WHEN GOVERNMENT DRAWINGS, SPECIFICATIONS, OR OTHER DATA ARE USED FOR ANY PURPOSE OTHER THAN IN CONNECTION WITH A DEFINITELY RELATED GOVERNMENT PROCUREMENT OPERATION, THE UNITED STATES GOVERNMENT THEREBY INCURS NO RESPONSIBILITY NOR ANY OBLIGATION WHATSOEVER; AND THE FACT THAT THE GOVERNMENT MAY HAVE FORMULATED, FURNISHED, OR IN ANY WAY SUPPLIED THE SAID DRAWINGS, SPECIFICATIONS, OR OTHER DATA IS NOT TO BE REGARDED BY IMPLICATION OR OTHERWISE AS IN ANY MANNER LICENSING THE HOLDER OR ANY OTHER PERSON OR CORPORATION, OR CONVEYING ANY RIGHTS OR PERMISSION TO MANUFACTURE, USE, OR SELL ANY PATENTED INVENTION THAT MAY IN ANY WAY BE RELATED THERETO.

SPECIFIC NOTES:

A. PROVIDE TWO INDUSTRIAL 4-PAIR 23 AWG CAT6 UTP CABLES. TERMINATE EACH END OF CABLE WITH AN 8-POSITION 8-CONTACT CAT6 RJ-45 CONNECTOR.

B. TERMINATE EACH FOC STRAND PAIR WITH A LC CONNECTOR FOR MATING TO SEL-3530 REAL-TIME AUTOMATION CONTROLLER.

C. LEAVE 30'-0" SLACK IN EACH FOC, NEATLY BUNDLED, COILED, AND SECURED, FOR TERMINATION BY THE NASA IT GROUP.

D. PROVIDE IRIG-B COAXIAL CABLE, SEL C953.

E. PROVIDE EIA-232 WITH IRIG-B SERIAL COMMUNICATIONS VIA COPPER CONDUCTOR CABLES, SEL C273A.

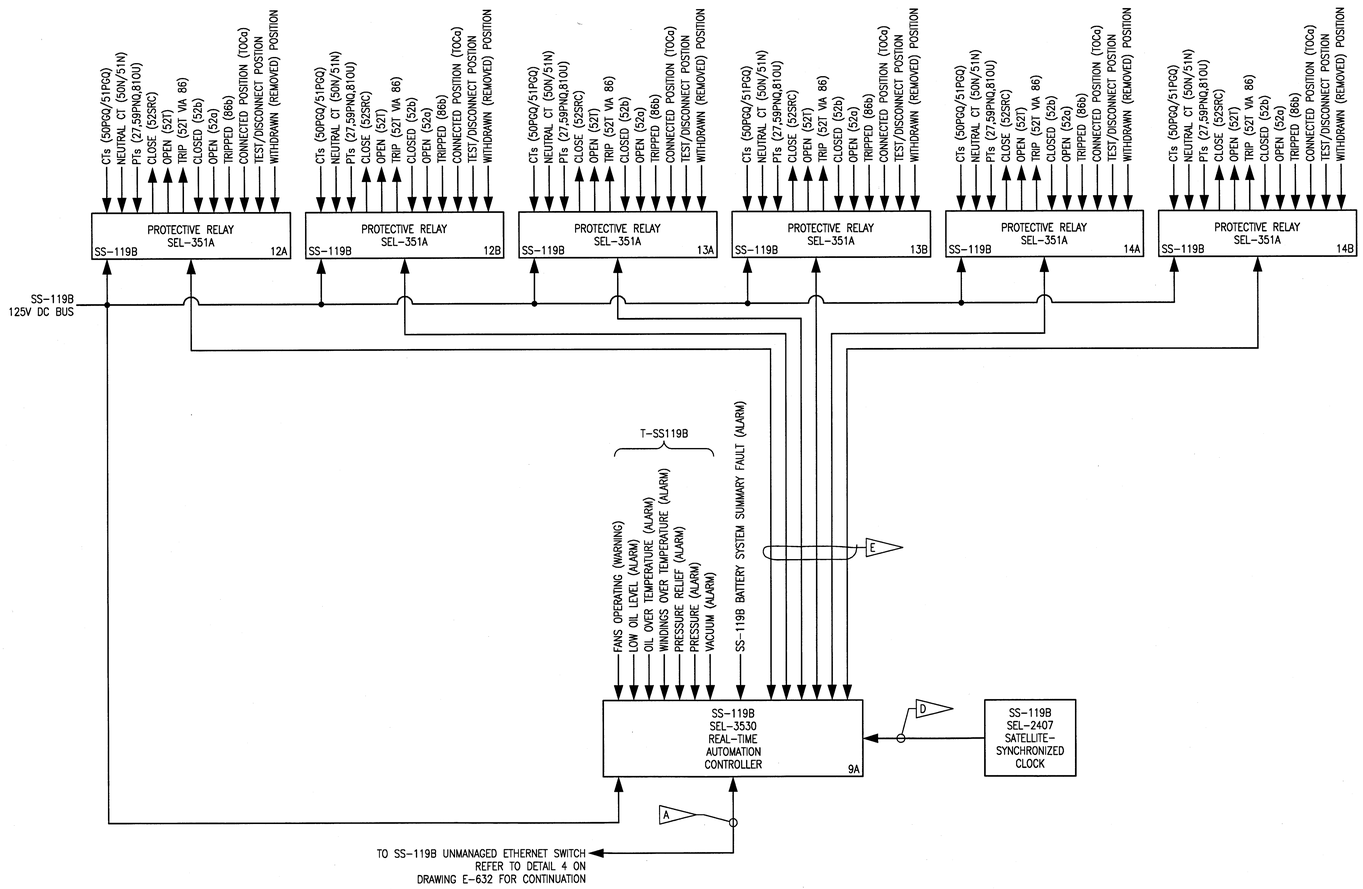

SS-119B PROTECTIVE RELAY SYSTEM ARCHITECTURE DIAGRAM

1 / E-634

NTS

SYM.	ZONE	DESCRIPTION	DATE	APPROVED
		REVISIONS		

URS

7650 West Courtney Campbell Causeway
Suite 700
Tampa, Florida 33607
Ph: (813) 286-1711 Fax: (813) 286-6587
Florida Engineering Number: 000002

SIGNATURES		DATE
DRAWN	TRS	9/24/12
CHECKED	GHD	9/24/12
SUBMITTED	GARRET KERLY	9/24/12
ST OF LICENSURE: FL		
LICENSE NO.: 54952		
APPROVED	F. WALKER	9/24/12
	S. MEHTA	9/25/12

NATIONAL AERONAUTICS AND SPACE ADMINISTRATION
JOHN F. KENNEDY SPACE CENTER, NASA
KENNEDY SPACE CENTER, FLORIDA

REVITALIZE MEDIUM VOLTAGE ELECTRICAL DISTRIBUTION SYSTEMS, INDUSTRIAL AND PAYLOAD PROCESSING AREAS

SYSTEM ARCHITECTURE DIAGRAMS

FILE NO. | SIZE F | DWG. NO. 79K39135

PCN NO. 98860 | SHEET 90

E-634

F:\NASA KSC\Task 8C - 1\Drawings\E-632-635 SYSTEM ARCHITECTURE DIAGRAMS.dwg 09/25/2012 14:07

KSC FORM 1-11A (REV 6/91) (C/G 12/93)

NOTICE – WHEN GOVERNMENT DRAWINGS, SPECIFICATIONS, OR OTHER DATA ARE USED FOR ANY PURPOSE OTHER THAN IN CONNECTION WITH A DEFINITELY RELATED GOVERNMENT PROCUREMENT OPERATION, THE UNITED STATES GOVERNMENT THEREBY INCURS NO RESPONSIBILITY NOR ANY OBLIGATION WHATSOEVER; AND THE FACT THAT THE GOVERNMENT MAY HAVE FORMULATED, FURNISHED, OR IN ANY WAY SUPPLIED THE SAID DRAWINGS, SPECIFICATIONS, OR OTHER DATA IS NOT TO BE REGARDED BY IMPLICATION OR OTHERWISE AS IN ANY MANNER LICENSING THE HOLDER OR ANY OTHER PERSON OR CORPORATION, OR CONVEYING ANY RIGHTS OR PERMISSION TO MANUFACTURE, USE, OR SELL ANY PATENTED INVENTION THAT MAY IN ANY WAY BE RELATED THERETO.

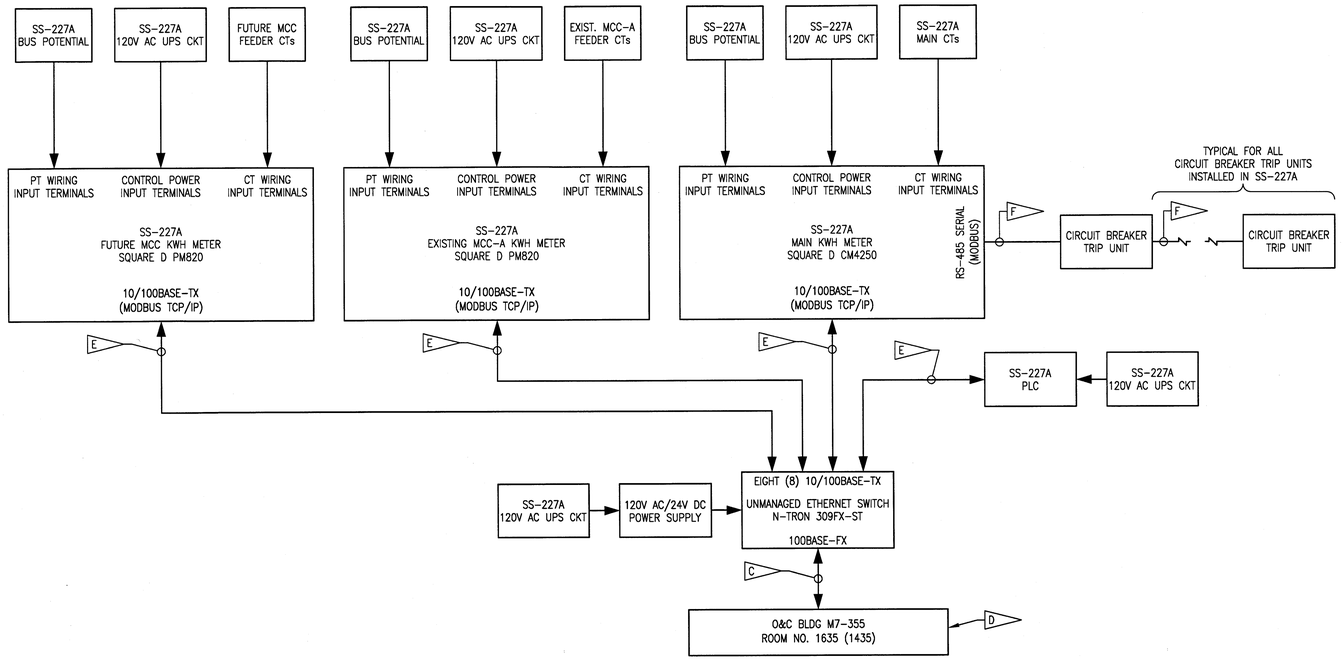

SS-227A METERING AND TELEMETRY SYSTEM ARCHITECTURE DIAGRAM

NTS

1 / E-635

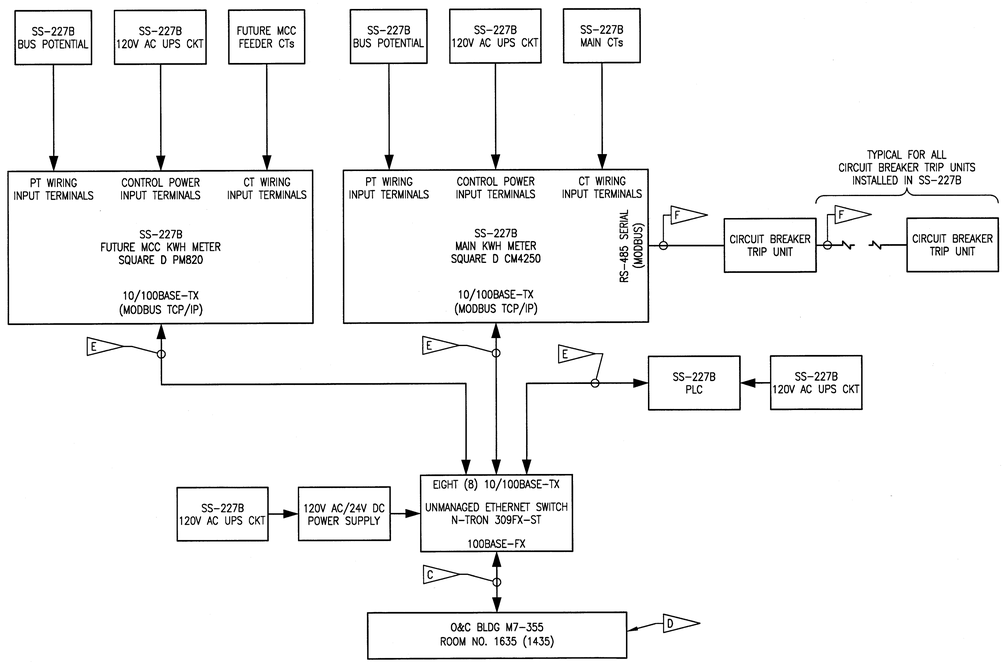

SS-227B METERING AND TELEMETRY SYSTEM ARCHITECTURE DIAGRAM

NTS

2 / E-635

SPECIFIC NOTES:

A. REFER TO SPECIFICATIONS SECTION 26 23 00.00 98 LOW VOLTAGE SWITCHGEAR FOR DETAILED REQUIREMENTS. SYSTEM ARCHITECTURE DIAGRAMS ON THIS DRAWINGS WERE DEVELOPED USING SQUARE D CIRCUIT BREAKER TRIP UNITS AS THE BASIS OF DESIGN. OTHER MANUFACTURER'S PRODUCTS ARE ACCEPTABLE PROVIDED THE SYSTEMS PROPOSED OFFER COMPARABLE CAPABILITIES AND FUNCTIONALITY AS THE BASIS OF DESIGN SYSTEM USING SQUARE D CIRCUIT BREAKER TRIP UNITS. OTHER MANUFACTURER'S PRODUCTS MAY REQUIRE A DIFFERENT ARCHITECTURE.

B. THE CONTRACTOR SHALL ARRANGE, COORDINATE, SCHEDULE, AND PAY FOR THE SERVICES OF A TELECOMMUNICATIONS CONTRACTOR TO COMPLETE THE INSTALLATION AND TESTING OF THE FOC DESCRIBED BY SPECIFIC NOTES C AND D BELOW. THE TELECOMMUNICATIONS CONTRACTOR SHALL BE A FIRM WHICH IS REGULARLY AND PROFESSIONALLY ENGAGED IN THE BUSINESS OF INSTALLING AND TESTING TELECOMMUNICATIONS SYSTEMS. THE TELECOMMUNICATIONS CONTRACTOR SHALL DEMONSTRATE EXPERIENCE IN THE SUCCESSFUL COMPLETION OF TELECOMMUNICATIONS SYSTEMS INSTALLATIONS WITH THE PAST 3 YEARS. SUBMIT DOCUMENTATION FOR A MINIMUM OF THREE AND MAXIMUM OF FIVE SUCCESSFUL TELECOMMUNICATIONS SYSTEMS INSTALLATIONS FOR THE TELECOMMUNICATIONS CONTRACTOR. THE TELECOMMUNICATIONS CONTRACTOR SHALL PROVIDE KEY PERSONNEL WHO ARE REGULARLY AND PROFESSIONALLY ENGAGED IN THE BUSINESS OF INSTALLING AND TESTING TELECOMMUNICATIONS SYSTEMS. KEY PERSONNEL ASSIGNED TO COMPLETE THE TELECOMMUNICATIONS WORK OF THIS PROJECT SHALL BE BUILDING INDUSTRY CONSULTING SERVICES INTERNATIONAL (BICSI) REGISTERED CABLING INSTALLERS, TECHNICIAN LEVEL. PERFORM OPTICAL FIBER END-TO-END LINK TESTS, IN ACCORDANCE WITH TIA-568-C.3, ON EACH STRAND OF EACH FOC.

C. PROVIDE 6-STRAND 62.5/125 um MULTIMODE (OM1) INDOOR/OUTDOOR ALL DIELECTRIC RISER (OFNR) RATED BACKBONE FIBER OPTIC CABLE (FOC) CONFORMING TO ICEA S-104-696, TIA-568-C.3, UL 1666, AND NFPA 70. TERMINATE EACH END OF EACH FOC STRAND WITH A ST CONNECTOR FOR MATING TO UNMANANAGED ETHERNET SWITCH. CONTRACTOR TO VERIFY CONNECTOR TYPE WITH UNMANANAGED ETHERNET SWITCH PROPOSED AND APPROVED FOR USE ON THIS PROJECT.

D. LEAVE 30'-0" SLACK IN FOC, NEATLY BUNDLED, COILED, AND SECURED, FOR ROUTING BY THE NASA IT GROUP.

E. PROVIDE INDUSTRIAL 4-PAIR 23 AWG CAT6 UTP CABLE. TERMINATE EACH END OF CABLE WITH AN 8-POSITION 8-CONTACT CAT6 RJ-45 CONNECTOR.

F. PROVIDE RS-485 SERIAL (MODBUS) COMMUNICATIONS CABLING INTERCONNECTING EACH CIRCUIT BREAKER TRIP UNIT IN A DAISY-CHAIN FASHION.

SYM.	ZONE	DESCRIPTION	DATE	APPROVED
		REVISIONS		

URS
7650 West Courtney Campbell Causeway
Suite 700
Tampa, Florida 33607
Ph: (813) 286-1711 Fax: (813) 286-6587
Florida Engineering Number: 000002

SIGNATURES		DATE
DRAWN	TRS	9/24/12
CHECKED	GHD	9/24/12
SUBMITTED	GARRET KERLY	9/24/12
ST OF LICENSURE: FL		
LICENSE NO.: 54952		
APPROVED	F. WALKER	9/24/12
	S. MEHTA	9/25/12

NATIONAL AERONAUTICS AND SPACE ADMINISTRATION
JOHN F. KENNEDY SPACE CENTER, NASA
KENNEDY SPACE CENTER, FLORIDA

REVITALIZE MEDIUM VOLTAGE ELECTRICAL DISTRIBUTION SYSTEMS, INDUSTRIAL AND PAYLOAD PROCESSING AREAS

SYSTEM ARCHITECTURE DIAGRAMS

E-635

FILE NO. | SIZE F | DWG. NO. 79K39135

PCN NO. 98860 | SHEET 91

KSC FORM 1-11A (REV 6/91) (C/G 12/93)

NOTICE – WHEN GOVERNMENT DRAWINGS, SPECIFICATIONS, OR OTHER DATA ARE USED FOR ANY PURPOSE OTHER THAN IN CONNECTION WITH A DEFINITELY RELATED GOVERNMENT PROCUREMENT OPERATION, THE UNITED STATES GOVERNMENT THEREBY INCURS NO RESPONSIBILITY NOR ANY OBLIGATION WHATSOEVER; AND THE FACT THAT THE GOVERNMENT MAY HAVE FORMULATED, FURNISHED, OR IN ANY WAY SUPPLIED THE SAID DRAWINGS, SPECIFICATIONS, OR OTHER DATA, IS NOT TO BE REGARDED BY IMPLICATION, OR OTHERWISE AS IN ANY MANNER LICENSING THE HOLDER OR ANY OTHER PERSON OR CORPORATION, OR CONVEYING ANY RIGHTS OR PERMISSION TO MANUFACTURE, USE, OR SELL ANY PATENTED INVENTION THAT MAY IN ANY WAY BE RELATED THERETO.

SPECIFIC NOTES:

A. SWITCHBOARD B1 GROUP-MOUNTED DISTRIBUTION SECTION SHALL ACCOMMODATE ALL CIRCUIT BREAKER FRAME, 100A THROUGH 800A, AND SHALL PROVIDE FOR A MINIMUM OF 63" OF CIRCUIT BREAKER MOUNTING SPACE. PROVIDE SWITCHBOARD B1 EQUIPPED WITH AN INTEGRAL SPD.

B. PROVIDE PANELBOARD EQUIPPED WITH AN INTEGRAL SPD.

C. PANELBOARD B2 SHALL ACCOMMODATE ALL CIRCUIT BREAKER FRAME, 100A THROUGH 250A, AND SHALL PROVIDE FOR A MINIMUM OF 45" OF CIRCUIT BREAKER MOUNTING SPACE. PROVIDE PANELBOARD B2 EQUIPPED WITH AN INTEGRAL SPD.

D. NEUTRAL AND GROUND WIRE FOR 277VAC LIGHTING CIRCUITS TO MATCH SIZE OF PHASE CONDUCTORS.

E. BRANCH CIRCUITS SHOWN FOR GENERAL CONCEPT ONLY. ADJUST BRANCH CIRCUIT QUANTITY AND RATINGS AS PER SUBSTATION MANUFACTURER'S REQUIREMENTS.

SWITCHBOARD B1 SCHEDULE [A]

1200A BUS, 800AF/800AT MCB, 480Y/277V, 3 PH., 4W., 42 KAIC MIN., FREE-STANDING, NEMA TYPE 1 ENCLOSURE

CKT NO.	LOAD SERVED	LOAD (AMPS) A	LOAD (AMPS) B	LOAD (AMPS) C	CKT BKR FRAME	CKT BKR TRIP	CKT BKR POLES	FEEDER	CONDUIT SIZE	CONDUIT TYPE
1	10KVA XFMR	21	21	0	100A	30A	2	2-#10 AWG PH. AND 1-#10 AWG GND	0.75"	GRS
2	SPARE	–	–	–	100A	20A	3	–	–	–
3	SPARE	–	–	–	100A	30A	3	–	–	–
4	SPARE	–	–	–	100A	40A	3	–	–	–
5	SPARE	–	–	–	100A	100A	3	–	–	–
6	SPARE	–	–	–	250A	225A	3	–	–	–
7	CONDENSER WATER PUMP 5	124	124	124	400A	300A	3	3-2/0 AWG. PH. AND 1-#4 AWG GND	2"	GRS
8	LIGHTING CONTACTOR	140	140	140	250A	175A	3	3-2/0 AWG PH., 1-2/0 AWG NEUT., AND 1-#4 AWG GND	2.5"	GRS
9	MCC EE	320	320	320	600A	400A	3	3-500 KCMIL PH., 1-500 KCMIL NEUT., AND 1-#3 AWG GND	4"	GRS
10	SPARE	–	–	–	600A	400A	3	–	–	–
TOTAL CONNECTED LOAD (AMPS)		605	605	584						

PANEL P-SS119A SCHEDULE [B] [E]

125A MCB, 125A BUS, 120/240V, 1 PH., 3W., 10 KAIC MIN., RECESSED MOUNT INTEGRAL TO SWITCHGEAR, NEMA TYPE 1 ENCLOSURE

LOAD SERVED	LOAD (AMPS) A	LOAD (AMPS) B	CKT BKR (AMPS/POLES)	WIRE SIZE	CKT NO.	CKT NO.	WIRE SIZE	CKT BKR (AMPS/POLES)	LOAD (AMPS) A	LOAD (AMPS) B	LOAD SERVED
CONVENIENCE RECEPTACLES	3.0		20/1	#12	1	2	#8	40/2	32.0		BATTERY SYSTEM CHARGER
HOUSING INTERIOR LIGHTS		4.0	20/1	#12	3	4	#8			32.0	
HOUSING EXTERIOR LIGHTS	3.0		20/1	#12	5	6	#10	30/2	20.0		TRANSFORMER COOLING FANS
EXHAUST FAN		4.4	20/1	#12	7	8	#10			20.0	
HEATERS	10.0		20/1	#12	9	10		40/2			SPARE
HEATERS		10.0	20/1	#12	11	12					
SPARE			20/1	#12	13	14		20/1			SPARE
SPARE			20/2		15	16		30/2			SPARE
					17	18					
TOTAL	16.0	18.4							52.0	52.0	TOTAL

TOTAL CONNECTED LOAD (AMPS): A=68.0 B=70.4

PANEL P-SS119B SCHEDULE [B] [E]

125A MCB, 125A BUS, 120/240V, 1 PH., 3W., 10 KAIC MIN., RECESSED MOUNT INTEGRAL TO SWITCHGEAR, NEMA TYPE 1 ENCLOSURE

LOAD SERVED	LOAD (AMPS) A	LOAD (AMPS) B	CKT BKR (AMPS/POLES)	WIRE SIZE	CKT NO.	CKT NO.	WIRE SIZE	CKT BKR (AMPS/POLES)	LOAD (AMPS) A	LOAD (AMPS) B	LOAD SERVED
CONVENIENCE RECEPTACLES	3.0		20/1	#12	1	2	#8	40/2	32.0		BATTERY SYSTEM CHARGER
HOUSING INTERIOR LIGHTS		4.0	20/1	#12	3	4	#8			32.0	
HOUSING EXTERIOR LIGHTS	3.0		20/1	#12	5	6	#10	30/2	20.0		TRANSFORMER COOLING FANS
EXHAUST FAN		4.4	20/1	#12	7	8	#10			20.0	
HEATERS	10.0		20/1	#12	9	10		40/2			SPARE
HEATERS		10.0	20/1	#12	11	12					
SPARE			20/1	#12	13	14		20/1			SPARE
SPARE			20/2		15	16		30/2			SPARE
					17	18					
TOTAL	16.0	18.4							52.0	52.0	TOTAL

TOTAL CONNECTED LOAD (AMPS): A=68.0 B=70.4

PANEL P-SS227A SCHEDULE [B] [E]

80A MCB, 100A BUS, 120/240V, 1 PH., 3W., 10 KAIC MIN., RECESSED MOUNT INTEGRAL TO SWITCHGEAR, NEMA TYPE 1 ENCLOSURE

LOAD SERVED	LOAD (AMPS) A	LOAD (AMPS) B	CKT BKR (AMPS/POLES)	WIRE SIZE	CKT NO.	CKT NO.	WIRE SIZE	CKT BKR (AMPS/POLES)	LOAD (AMPS) A	LOAD (AMPS) B	LOAD SERVED
ENCLOSURE LIGHTS	1.4		20/1	#12	1	2		20/1	0.0		SPARE
RECEPTACLES		4.5	20/1	#12	3	4		20/1		0.0	SPARE
HEATERS	2.1		20/1	#12	5	6		20/2	0.0		SPARE
HEATERS		2.1	20/1	#12	7	8				0.0	
UPS	0.5		20/1	#12	9	10		20/1	0.0		SPARE
SPARE			20/1		11	12		20/1		0.0	SPARE
SPACE					13	14					SPACE
SPACE					15	16					SPACE
SPACE					17	18					SPACE
TOTAL	4.0	6.6							0.0	0.0	TOTAL

TOTAL CONNECTED LOAD (AMPS): A=4.0 B=5.1

PANEL P-SS227B SCHEDULE [B] [E]

80A MCB, 100A BUS, 120/240V, 1 PH., 3W., 10 KAIC MIN., RECESSED MOUNT INTEGRAL TO SWITCHGEAR, NEMA TYPE 1 ENCLOSURE

LOAD SERVED	LOAD (AMPS) A	LOAD (AMPS) B	CKT BKR (AMPS/POLES)	WIRE SIZE	CKT NO.	CKT NO.	WIRE SIZE	CKT BKR (AMPS/POLES)	LOAD (AMPS) A	LOAD (AMPS) B	LOAD SERVED
ENCLOSURE LIGHTS	1.4		20/1	#12	1	2		20/1	0.0		SPARE
RECEPTACLES		4.5	20/1	#12	3	4		20/1		0.0	SPARE
HEATERS	2.1		20/1	#12	5	6		20/2	0.0		SPARE
HEATERS		2.1	20/1	#12	7	8				0.0	
UPS	0.5		20/1	#12	9	10					SPACE
SPARE			20/1		11	12					SPACE
SPACE					13	14					SPACE
SPACE					15	16					SPACE
SPACE					17	18					SPACE
TOTAL	4.0	6.6							0.0	0.0	TOTAL

TOTAL CONNECTED LOAD (AMPS): A=4.0 B=5.1

PANEL B2 SCHEDULE [C]

800A BUS, MLO, 480Y/277V, 3 PH., 4W., 42 KAIC MIN., SURFACE MOUNT, NEMA TYPE 4X 304SS ENCLOSURE

LOAD SERVED	LOAD (AMPS) A	LOAD (AMPS) B	LOAD (AMPS) C	CKT BKR (AMPS/POLES)	WIRE SIZE	CKT NO.	CKT NO.	WIRE SIZE	CKT BKR (AMPS/POLES)	LOAD (AMPS) A	LOAD (AMPS) B	LOAD (AMPS) C	LOAD SERVED
TRANSFORMER SA E01 019	180			225/3	(4) 250 (1) #4G	1	2	(3) #2 (1) #6G	175/3	90.0			T-B2
		180				3	4				90.0		
			180			5	6					90.0	
TRAFFIC LIGHTS NASA CAUSEWAY AND "E" AVE	5.0			30/2	(3) #6 (1) #6G	7	8		225/3	0.0			SPARE
		5.0				9	10				0.0		
SPARE			0.0	30/2		11	12					0.0	
	0.0					13	14		175/3	0.0			SPARE
SPACE						15	16				0.0		
SPACE						17	18					0.0	
SPACE						19	20						SPACE
SPACE						21	22						SPACE
SPACE						23	24						SPACE
SPACE						25	26						SPACE
SPACE						27	28						SPACE
SPACE						29	30						SPACE
TOTAL	185	185	180							90	90	90	TOTAL

TOTAL CONNECTED LOAD (AMPS): A=275 B=275 C=270

PANEL B3 SCHEDULE [B] [D]

125A BUS, MLO, 480Y/277V, 3 PH., 4W., 14 KAIC MIN., SURFACE MOUNT, NEMA TYPE 4X 304SS ENCLOSURE

LOAD SERVED	LOAD (AMPS) A	LOAD (AMPS) B	LOAD (AMPS) C	CKT BKR (AMPS/POLES)	WIRE SIZE	CKT NO.	CKT NO.	WIRE SIZE	CKT BKR (AMPS/POLES)	LOAD (AMPS) A	LOAD (AMPS) B	LOAD (AMPS) C	LOAD SERVED
PARKING LOT LIGHTS	12.0			20/1	#6	1	2	#6	20/1	12.0			PARKING LOT LIGHTS
PARKING LOT LIGHTS		12.0		20/1	#6	3	4	#6	20/1		12.0		PARKING LOT LIGHTS
PARKING LOT LIGHTS			12.0	20/1	#6	5	6	#6	20/1			12.0	PARKING LOT LIGHTS
PARKING LOT LIGHTS	12.0			20/1	#6	7	8		20/1	0.0			SPARE
PARKING LOT LIGHTS		12.0		20/1	#6	9	10		20/1		0.0		SPARE
PARKING LOT LIGHTS			12.0	20/1	#6	11	12		20/1			0.0	SPARE
SPACE						13	14						SPACE
SPACE						15	16						SPACE
SPACE						17	18						SPACE
TOTAL	24.0	24.0	24.0							12.0	12.0	12.0	TOTAL

TOTAL CONNECTED LOAD (AMPS): A=36.0 B=36.0 C=36.0

SYM.	ZONE	DESCRIPTION	DATE	APPROVED

REVISIONS

URS
7650 West Courtney Campbell Causeway
Suite 700
Tampa, Florida 33607
Ph: (813) 286-1711 Fax: (813) 286-6587
Florida Engineering Number: 000002

SIGNATURES		DATE
DRAWN	TRS	9/24/12
CHECKED	GHD	9/24/12
SUBMITTED	GARRET KERLY	9/24/12
ST OF LICENSURE: FL	LICENSE NO.: 54952	
APPROVED	F. WALKER	9/24/12
	S. MEHTA	9/25/12

NATIONAL AERONAUTICS AND SPACE ADMINISTRATION
JOHN F. KENNEDY SPACE CENTER, NASA
KENNEDY SPACE CENTER, FLORIDA

REVITALIZE MEDIUM VOLTAGE ELECTRICAL DISTRIBUTION SYSTEMS, INDUSTRIAL AND PAYLOAD PROCESSING AREAS

SWITCHBOARD AND PANELBOARD SCHEDULES

E-641

FILE NO. | SIZE F | DWG. NO. 79K39135

PCN NO. 98860 | SHEET 92 OF 92