DWG NO	SH	REV	DS NO	RT NO
103567	1	F		51401

REVISIONS

REV	DESCRIPTION	DATE	APPROVED
–	BASELINED IN ACCORDANCE WITH CA 2046.		
A	REVISED IN ACCORDANCE WITH DCN AND CA 2053.	3/18/05	V. TRAN D. HERFURTH
B	REVISED IN ACCORDANCE WITH DCN AND CA 2059.	4/05/05	V. TRAN D. HERFURTH
C	REVISED IN ACCORDANCE WITH DCN AND CA 2064.	4/13/05	V. TRAN D. HERFURTH
D	REVISED IN ACCORDANCE WITH DCN AND CA 2067.	4/26/05	V. TRAN D. HERFURTH
E	REVISED IN ACCORDANCE WITH DCN AND CA 2078.	5/16/05	V. TRAN D. HERFURTH
F	REVISED IN ACCORDANCE WITH DCN AND CA 2084.	6/24/05	V. TRAN D. HERFURTH DH.

SLO/SLE DCC
RELEASED
JUN 27 2005
COPY

NOTES:

1. THIS ITEM IS SPACE FLIGHT HARDWARE. EVIDENCE OF INSPECTION AND ACCEPTANCE IS REQUIRED.
2. INTERPRET DRAWING IN ACCORDANCE WITH MIL-T-100.
3. INTERPRET DIMENSIONS AND TOLERANCES IN ACCORDANCE WITH ANSI Y14.5M-1982.
4. ONLY THE FOLLOWING SOLUTIONS ARE ACCEPTABLE FOR USE DURING THE CLEANING OF THIS HARDWARE:
   DISTILLED WATER
   DISTILLED WATER AND DETERGENT CONTAINING NO PHOSPHATES.
5. PART IDENTIFICATION: BAG AND/OR TAG WITH PART NUMBER.
   P/N: 103567-(INSERT APPLICABLE DASH NUMBER)
   S/N: (AS SPECIFIED BY THE PROCURING ACTIVITY)
6. BREAK ALL SHARP EDGES .020 MINIMUM.
7. ZONE DESIGNATIONS
   X ← SHEET NUMBER OF DRAWING
   XX ← ZONE
8. FINISH MACHINED SURFACES 63 ✓

No Rev

[8] FINISH: ANODIZE IN ACCORDANCE WITH MIL-A-8625, TYPE II, CLASS 1, NATURAL.

[9] ANNEAL LEXAN MATERIAL IN ACCORDANCE WITH ADS-87-00-019, LEXAN SHEET PROCESSING AND FABRICATION SPECIFICATION.

[10] PLACE LABELS, FN 19 THROUGH 29 , APPROXIMATELY AS SHOWN PER PROCEDURE AE-04815.

[11] CLEAN LABEL CONTACT AREA AND ALLOW TO DRY FOR FIVE MINUTES MINIMUM; AFFIX LABEL, AT LOCATION AND ORIENTATION INDICATED. ALLOW LABEL ADHESIVE TO CURE 24 HOURS MINIMUM AT AMBIENT TEMPERATURE.

[12] NO TORQUE VALUE SPECIFIED FOR FASTENERS, FN 10. FASTENERS SHALL BE PROPERLY SEATED AND FLUSH TO THE SURFACE.

[13] TORQUE FASTENERS AS SHOWN WITH CALIBRATED TORQUE-LIMITED SCREWDRIVER TO 26 OUNCE-INCHES.

[14] TORQUE FASTENERS AS SHOWN WITH CALIBRATED TORQUE-LIMITED SCREWDRIVER TO 50 OUNCE-INCHES.

[15] (REMOVED)

[16] SUGGESTED SOURCE:
GENESSEE SCIENTIFIC
8965 MESA RIM RD, SUITE 206
SAN DIEGO, CA 92121

[17] SUGGESTED SOURCE:
GE PLASTICS
100 SOUTH STATE COLLEGE BLVD.
BREA, CA 92621

[18] SUGGESTED SOURCE:
BAY SEAL INC.
1550 WEST WINTON AVE
HAYWARD, CA 94545

[19] APPLY LABEL, FN 20, TO FIRST ITEM OF BUILD; LABEL, FN 21, TO SECOND ITEM; LABEL, FN 22, TO THIRD ITEM; LABEL, FN 23, TO FOURTH ITEM; LABEL, FN 24, TO FIFTH ITEM; LABEL, FN 25, TO SIXTH ITEM; LABEL, FN 26, TO SEVENTH ITEM; LABEL, FN 27, TO EIGHTH ITEM; LABEL, FN 28 TO NINTH ITEM; LABEL, FN 29, TO TENTH ITEM.

(NOTES CONTINUED ON SHEET 6)

(PARTS LIST CONTINUED ON SHEET 2)

506	505	504	503	502	501	500	001	CAGE CODE	PART NUMBER	NOMENCLATURE OR DESCRIPTION	MATERIAL SIZE	MATERIAL SPECIFICATION OR MAKE FROM	SH ZONE	FIND NO
							1		AE-04815-0004	LABEL			2 B4	23
							1		AE-04815-0003	LABEL			2 B4	22
							1		AE-04815-0002	LABEL			2 B4	21
							1		AE-04815-0001	LABEL			2 B4	20
							1		AE-04815-0011	LABEL			2 C5	19
	AR								57-100	MESH, STAINLESS STEEL		CRES [16]	5 B2	18
AR								3K664	103VT	CORD, VITON	.103 DIA	[18]	5 A4	17
					AR					SHEET	.063 THICK	6061-T6 AL QQ-A-250/11	4 B6	16
			AR							PLATE	.31 THICK	6061-T651 AL QQ-A-250/11	5 D6	15
						AR				PLATE OR BAR	.75 THICK	6061-T651 AL QQ-A-250/11	3 D7	14
		AR		AR				72799	9600-116	SHEET, CLEAR, LEXAN	.063 THK	A-A59502 [17]	4 D5	13
							1		103598-001	TYPE 1 CONTAINER, FIT (LID)			2 C4	12
							4	32652	30979T	SCREW, FLT HD, CROSS RECESS, NYLOC INSERT	M2.5 X 4.0 LG	CRES, DIN 965A	2 D3	11
							4	32652	30923T	SCREW, FLT HD, CROSS RECESS, NYLOC INSERT	M2 X 4.0 LG	CRES, DIN 965A	2 C7	10
							18	32652	30925T	SCREW, FLT HD, CROSS RECESS, NYLOC INSERT	M2 X 8.0 LG	CRES, DIN 965A	2 B6	9
X							1		103567-506	DETENT			2 A5	8
	X						2		103567-505	MESH			2 B2	7
		X					2		103567-504	MESH COVER			2 C6	6
			X				1		103567-503	END			2 C6	5
				X			1		103567-502	COVER			2 C7	4
					X		1		103567-501	BASE			2 B7	3
						X	1		103567-500	BODY			2 B8	2
							X		103567-001	FOOD TRAY CONTAINER ASSEMBLY, FIT			2 A6	1

QTY

LEGEND

FIT = FUNGAL PATHOGENESIS, TUMORIGENESIS, AND EFFECTS OF HOST IMMUNITY IN THE SPACE ENVIRONMENT.

DASH NO	NEXT ASSEMBLY	USED ON
001	103564	FIT

PRODUCT ASSURANCE: R. JUNNILA
DRAWN: D. WOLFF 2/25/05
APPROVED:
CHECKED: D. HERFURTH
APPROVED:
DESIGN SUPV: J. REIMER
APPROVED:
PROJECT ENGR: LUKE SING
APPROVED:
ENGRG MGR: D. TSAIRIDES
APPROVED:
MFG ENGR:

LOCKHEED MARTIN SPACE OPERATIONS
P.O. Box 168 Moffett Field, California 94035

UNLESS OTHERWISE SPECIFIED LINEAR TOLERANCES .XXX= ±.002 .XX= ±.01 .X= ±.1 FINISH: 63 ANGLES= ±1° LINEAR DIMENSIONS IN INCHES

FOOD TRAY CONTAINER ASSEMBLY, FIT

DO NOT SCALE DRAWING
SCALE: NONE
SHEET 1 OF 6

Ames Research Center

SIZE D | DWG NO 103567 | REV F

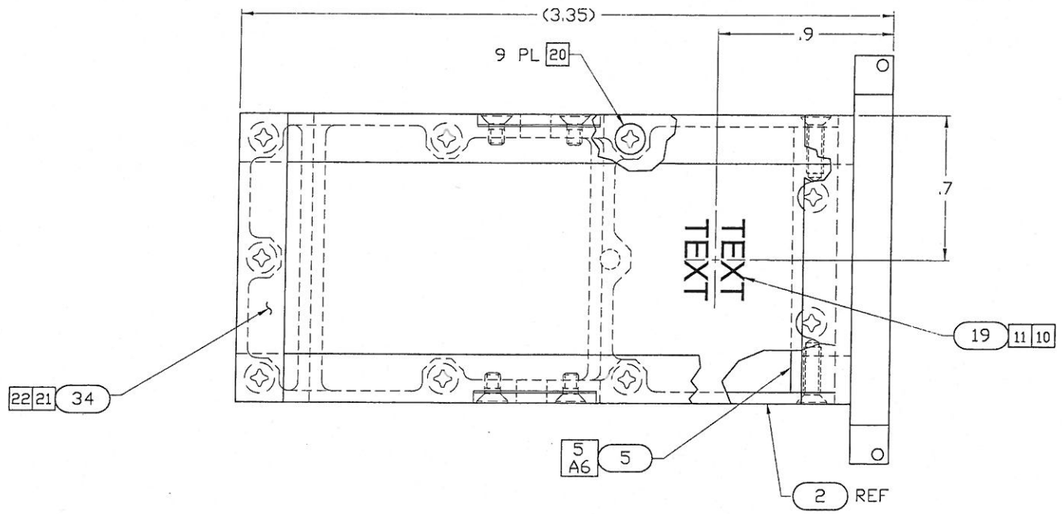

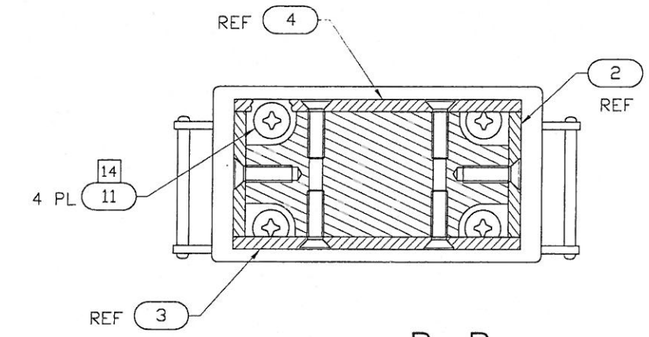

SECTION B–B
(SCALE 8/3)

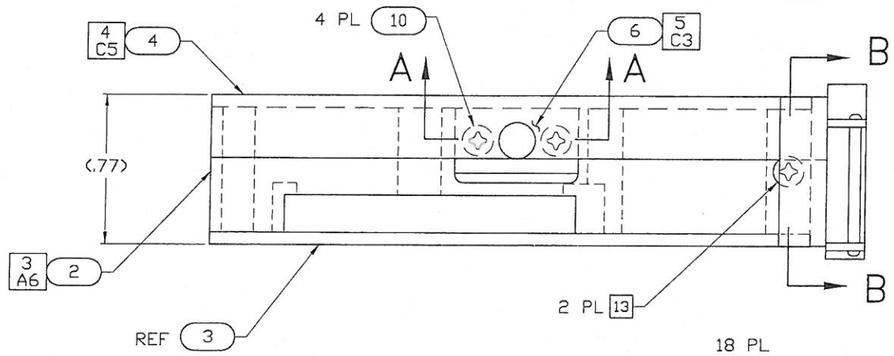

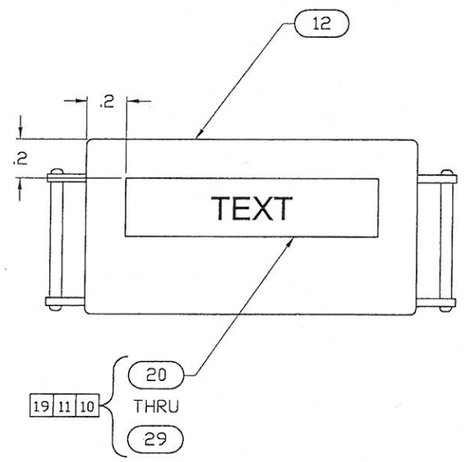

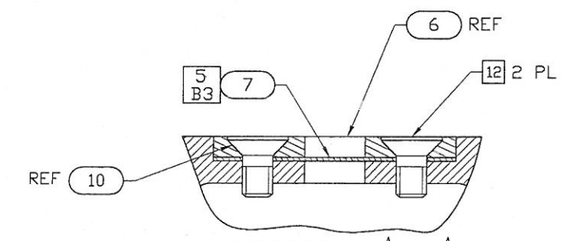

SECTION A–A
(SCALE: NONE) 2 PLACES

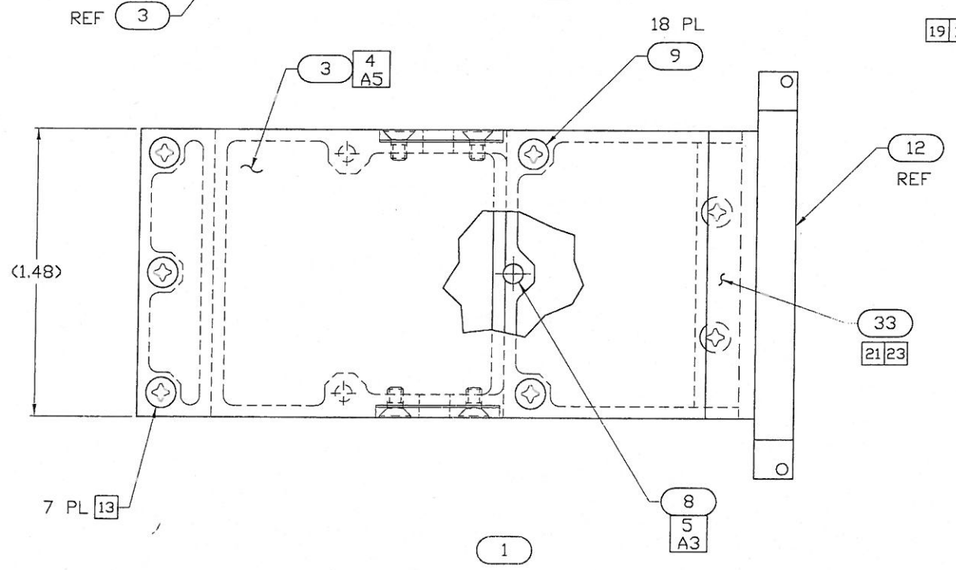

(PARTS LIST CONTINUED ON SHEET 6)

506	505	504	503	502	501	500	001	CAGE CODE	PART NUMBER	NOMENCLATURE OR DESCRIPTION	MATERIAL SIZE	MATERIAL SPECIFICATION OR MAKE FROM	SH ZONE	FIND NO
							REF			TEST PROCEDURE FOR THE PERFORMANCE OF METRIC NONMETALLIC RESISTANT ELEMENT PREVAILING-TORQUE SCREWS.		IFI-524		32
			REF		REF	REF				ANODIC COATING FOR AL		MIL-A-8625		31
		REF		REF						LEXAN SHEET PROCESSING & FABRICATION SPECIFICATIONS.		ADS-87-00-019		30
							1		AE-04815-0010	LABEL			2 B4	29
							1		AE-04815-0009	LABEL			2 B4	28
							1		AE-04815-0008	LABEL			2 B4	27
							1		AE-04815-0007	LABEL			2 B4	26
							1		AE-04815-0006	LABEL			2 B4	25
							1		AE-04815-0005	LABEL			2 B4	24

QTY

DO NOT SCALE DRAWING

SCALE: 8/3

SHEET 2

Ames Research Center

SIZE D DWG NO 103567 REV F

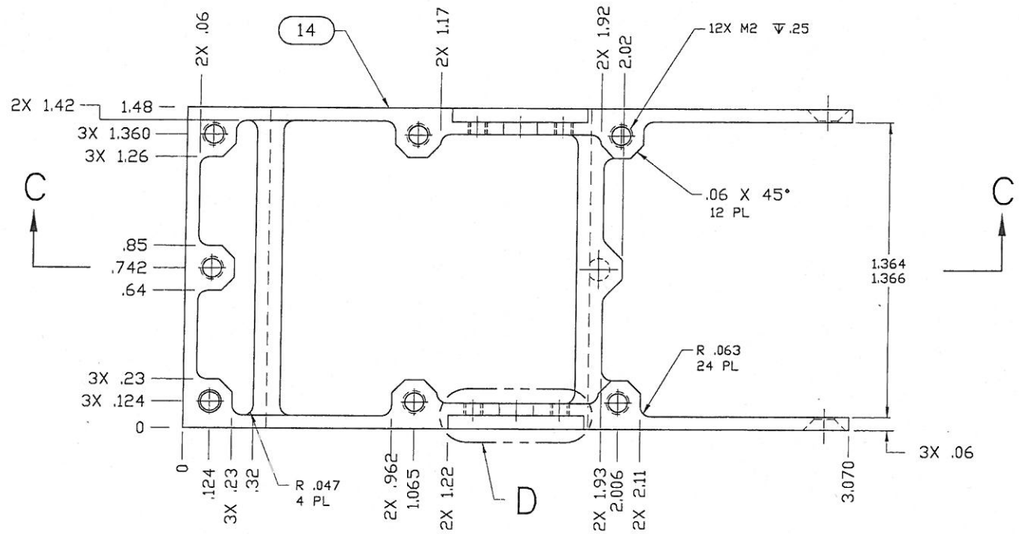

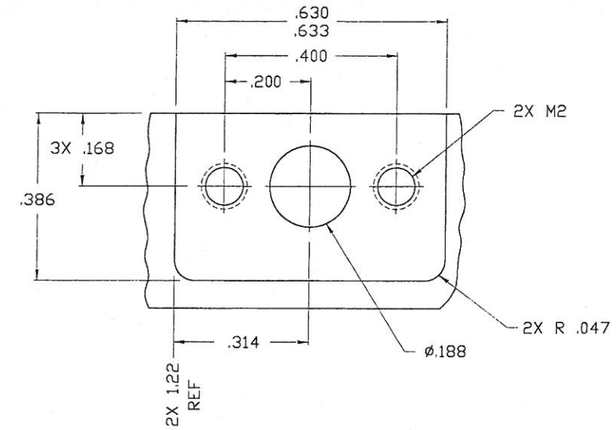

DETAIL E

APPLICABLE: 2 PLACES

(SCALE: NONE)

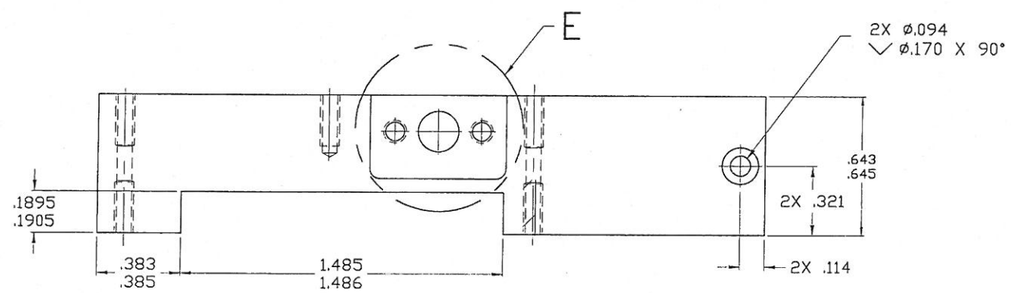

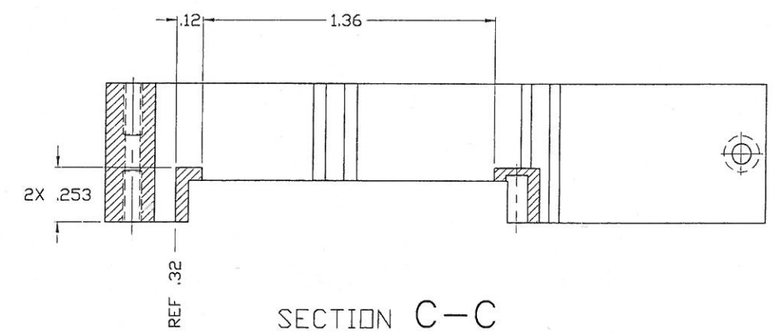

SECTION C–C

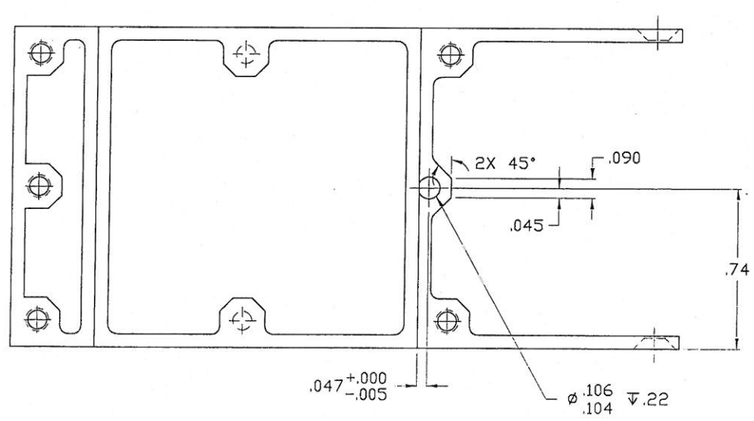

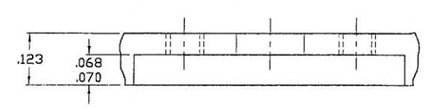

DETAIL D

APPLICABLE: 2 PLACES

(SCALE: NONE)

8 2 | 2 B8

DO NOT SCALE DRAWING	Ames Research Center		
SCALE: 4/1			
SHEET 3	SIZE D	DWG NO 103567	REV F

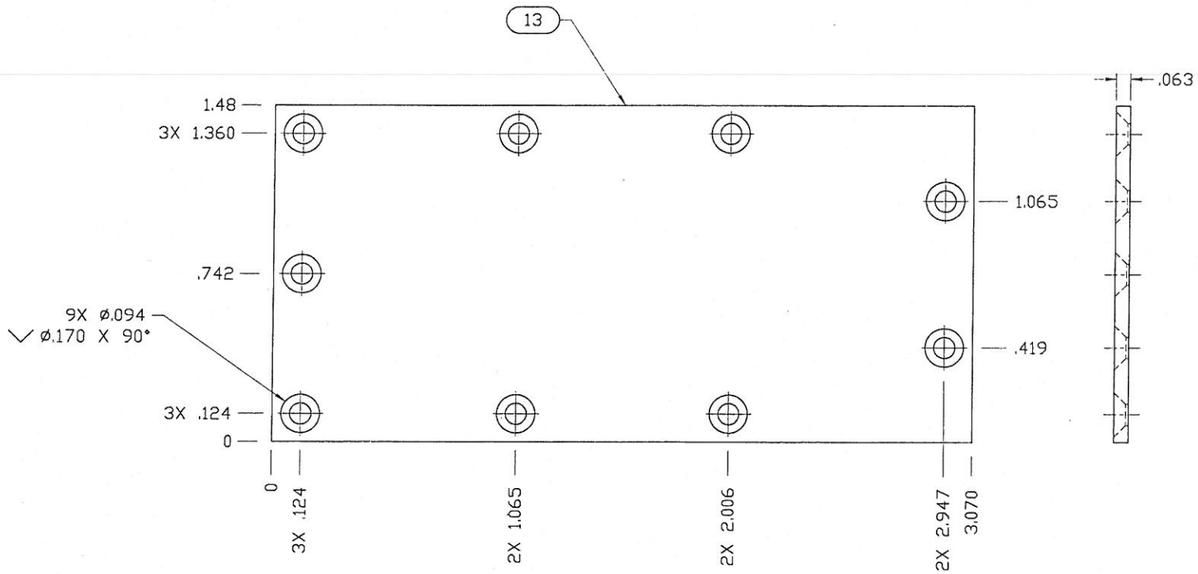

9 4 2 C7

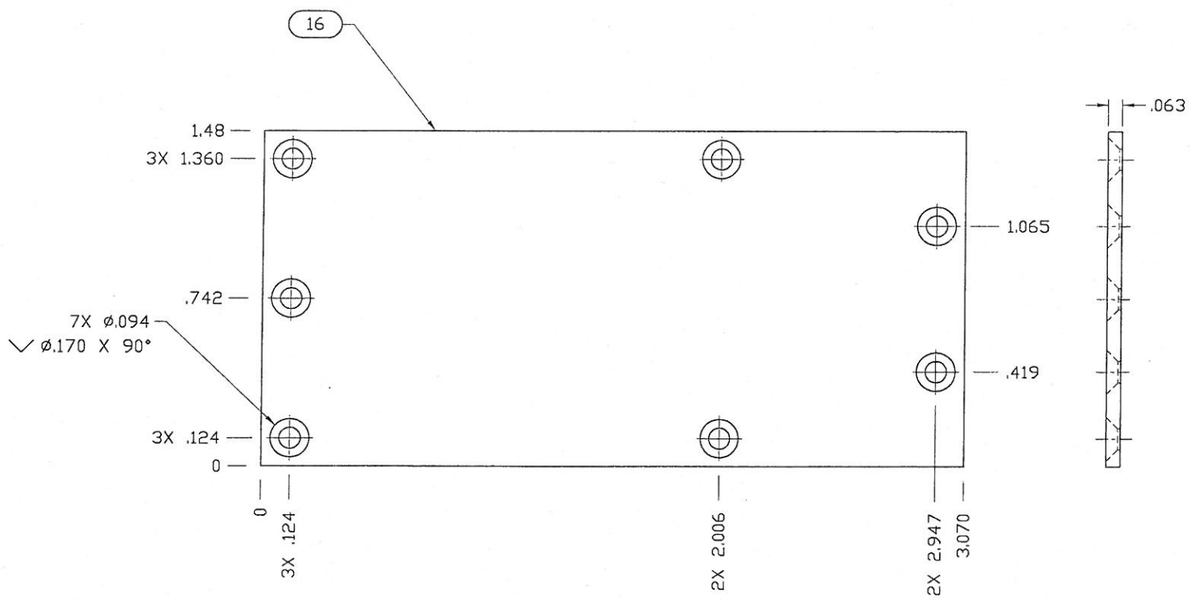

8 3 2 B7

DO NOT SCALE DRAWING	Ames Research Center
SCALE: 4/1	
SHEET 4	SIZE D DWG NO 103567 REV F

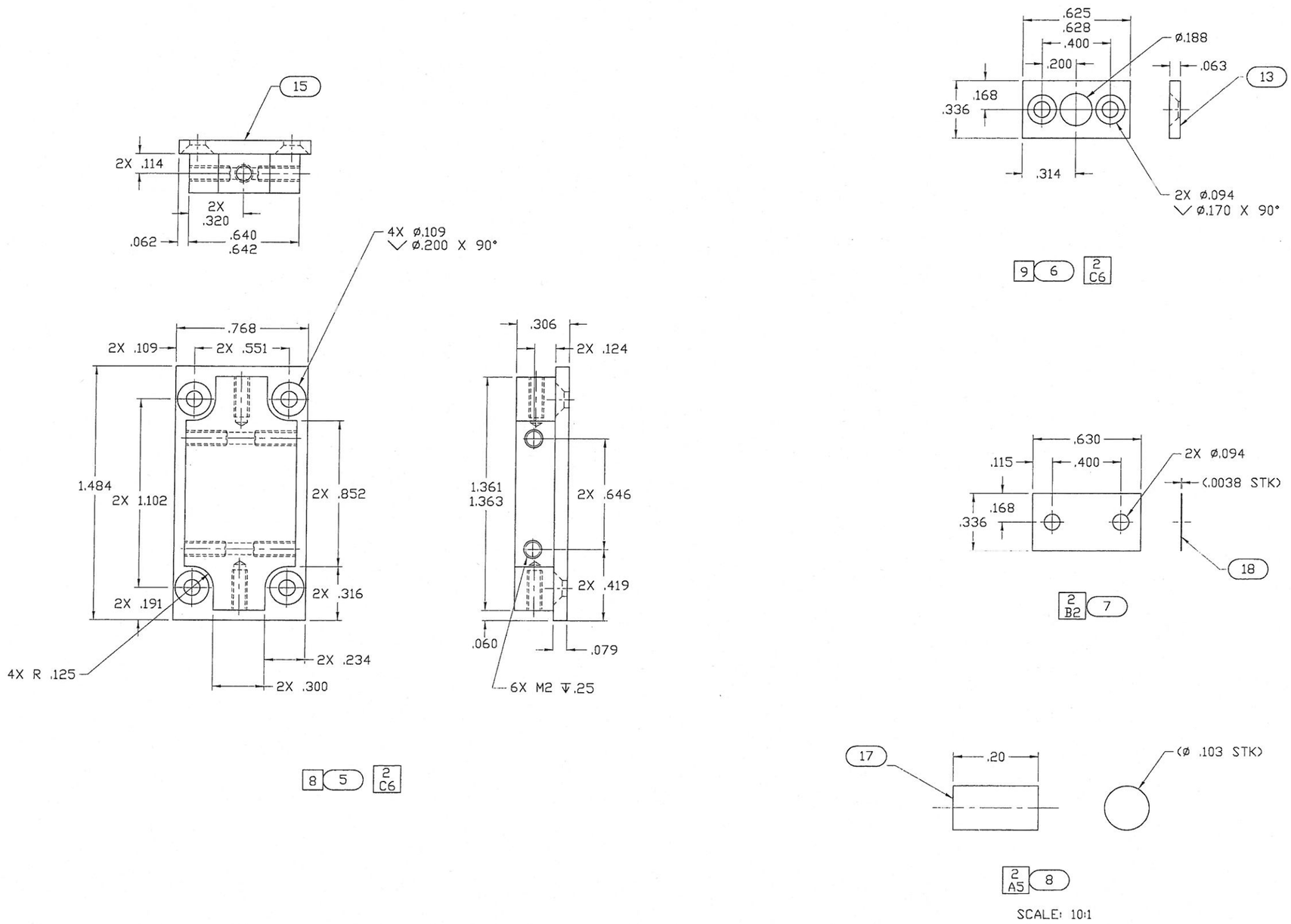

SCALE: 10:1

DO NOT SCALE DRAWING	Ames Research Center		
SCALE: 4/1			
SHEET 5	SIZE D	DWG NO 103567	REV F

NOTES:

20 NO TORQUE VALUE SPECIFIED FOR (9) FASTENERS, FN 9. FASTENERS SHALL BE PROPERLY SEATED AND FLUSH TO THE SURFACE OF THE COVER, FN 4.

21 CLEAN TAPE CONTACT AREA AND ALLOW TO DRY FOR FIVE MINUTES MINIMUM PRIOR TO AFFIXING TAPE.

22 TRIM TAPE, FN 34, TO COVER THE AREAS WHERE THE COVER, FN 4, AND THE BODY, FN 2, MATE TOGETHER. THE VENTING HOLES ON BOTH SIDES OF THE CONTAINER, FN 1, SHALL NOT BE COVERED.

23 TRIM TAPE, FN 33, TO COVER THE AREAS WHERE THE COVER, FN 4, THE BODY, FN 2, THE BASE, FN 3, AND THE END, FN 5, MATE TOGETHER. TAPE, FN 33, IS APPLIED OVER TAPE, FN 34, AS SHOWN.

24 SUGGESTED SOURCE OF SUPPLY:

3M COMPANY
INDUSTTRIAL TAPE & SPECIALTIES DIV.
3M CENTER, BLDG 220-7W-03
SAINT PAUL, MN 55144

506	505	504	503	502	501	500	001		CAGE CODE	PART NUMBER	NOMENCLATURE OR DESCRIPTION	MATERIAL SIZE	MATERIAL SPECIFICATION OR MAKE FROM	SH ZONE	FIND NO
QTY															
								ALT	76381	425-1/2	TAPE, ALUMINUM FOIL	1/2 WIDE	24	2 C8	34
								AR	76381	5413-1/2	TAPE, KAPTON HIGH TEMP	1/2 WIDE	24	2 C8	34
								ALT	76381	425-1/4	TAPE, ALUMINUM FOIL	1/4 WIDE	24	2 A5	33
								AR	76381	5413-1/4	TAPE, KAPTON HIGH TEMP	1/4 WIDE	24	2 A5	33

DO NOT SCALE DRAWING

SCALE: NONE

SHEET 6

Ames Research Center

SIZE D DWG NO 103567 REV F