| DWG NO | SH | REV | DS NO | RT NO |
|---|---|---|---|---|
| 103544 | 1 | E | | 51401 |

REVISIONS

| REV | DESCRIPTION | DATE | APPROVED |
|---|---|---|---|
| - | BASELINED IN ACCORDANCE WITH CA 2046. | | |
| A | REVISED IN ACCORDANCE WITH DCN AND CA 2057. | 3/31/05 | V. TRAN D. HERFURTH |
| B | REVISED IN ACCORDANCE WITH DCN AND CA 2064. | 4/12/05 | V. TRAN D. HERFURTH |
| C | REVISED IN ACCORDANCE WITH DCN AND CA 2067. | 4/26/05 | V. TRAN D. HERFURTH |
| D | REVISED IN ACCORDANCE WITH DCN AND CA 2076. | 5/11/05 | V. TRAN D. HERFURTH |
| E | REVISED IN ACCORDANCE WITH DCN AND CA 2081. | 5/24/05 | V. TRAN D. HERFURTH |

# NOTES:

1. THIS ITEM IS SPACE FLIGHT HARDWARE. EVIDENCE OF INSPECTION AND ACCEPTANCE IS REQUIRED.
2. INTERPRET DRAWING IN ACCORDANCE WITH MIL-STD-100.
3. INTERPRET DIMENSIONS AND TOLERANCES IN ACCORDANCE WITH ASME-Y14.5M.
4. ONLY THE FOLLOWING SOLUTIONS ARE ACCEPTABLE FOR USE DURING THE CLEANING OF THIS HARDWARE:
   DISTILLED WATER
   DISTILLED WATER AND DETERGENT CONTAINING NO PHOSPHATES.
5. PART IDENTIFICATION: BAG AND/OR TAG WITH PART NUMBER.
   P/N: 103544-(INSERT APPLICABLE DASH NUMBER)
   S/N: (AS SPECIFIED BY THE PROCURING ACTIVITY)
6. BREAK ALL SHARP EDGES .020 MINIMUM.
7. ZONE DESIGNATIONS
   X ← SHEET NUMBER OF DRAWING
   XX ← ZONE
8. FINISH MACHINED SURFACES 63 √

[9] ANNEAL LEXAN MATERIAL IN ACCORDANCE WITH ADS-87-00-019, LEXAN SHEET PROCESSING AND FABRICATION SPECIFICATION.

[10] MACHINE ENGRAVE LABEL TEXTS, FN 27 THROUGH 34, IN THE APPROXIMATE LOCATIONS AND ORIENTATIONS SHOWN PER PROCEDURE AE-04815.

[11] SUGGESTED SUPPLIER:
NORDEX INC.
426 FEDERAL ROAD
BROOKFIELD CT 06804

[12] SUGGESTED SUPPLIER:
McMASTER-CARR
P.O. BOX 54960
LOS ANGELES CA 90054

[13] SUGGESTED SUPPLIER:
EMHART TEKNOLOGIES
1402 McGAW
IRVINE CA 92714

[14] SUGGESTED SUPPLIER:
ASSOCIATED SPRING RAYMOND
1705 INDIAN WOOD CIRCLE, SUITE 210
MAUMEE OH 43537

[15] SUGGESTED SOURCE:
BAY SEAL INC.
1550 WEST WINTON AVE
HAYWARD, CA 94545

[16] SUGGESTED SOURCE OF SUPPLY:
DUPONT E. I.
BUFFALO RD.
NIAGARA FALLS, NY 51055

[17] SUGGESTED SOURCE:
GE PLASTICS
100 SOUTH STATE COLLEGE BLVD.
BREA, CA 92621

[18] INSTALL INSERTS IN ACCORDANCE WITH NASM33537, REMOVE TANG.

[19] SUGGESTED SOURCE:
VLIER
40 GUEST ST.
BRIGHTON, MA 02135

[20] PLACE LABELS, FN 35 & 36, APPROXIMATELY AS SHOWN PER PROCEDURE AE-04815.

[21] CLEAN LABEL CONTACT AREA AND ALLOW TO DRY FOR FIVE MINUTES MINIMUM; AFFIX LABEL, AT LOCATION AND ORIENTATION INDICATED. ALLOW LABEL ADHESIVE TO CURE 24 HOURS MINIMUM AT AMBIENT TEMPERATURE.

[22] APPLY LABEL, FN 27, TO FIRST ITEM OF BUILD; LABEL, FN 28, TO SECOND ITEM; LABEL, FN 29, TO THIRD ITEM; LABEL, FN 30, TO FOURTH ITEM; AND LABEL, FN 31, TO FIFTH ITEM.

[23] TORQUE FASTENERS AS SHOWN WITH CALIBRATED TORQUE-LIMITED SCREWDRIVER TO 3 POUND-INCHES (48 OUNCE-INCHES).

[24] TORQUE FASTENERS AS SHOWN WITH CALIBRATED TORQUE-LIMITED SCREWDRIVER TO 1.25 POUND-INCHES (20 OUNCE-INCHES).

[25] TORQUE FASTENERS UNTIL THEY ARE SNUG, THEN BACK OFF 1 TURN OR UNTIL LANYARD ROTATES FREELY.

[26] TIGHTEN SCREWS, FN 12, TO DIMENSION SHOWN.

[27] SUGGESTED SOURCE OF SUPPLY
VELCRO USA
406 BROWN AVE
MANCHESTER, NH. 03108

[28] CLEAN VELCRO CONTACT AREA WITH ISOPROPYL ALCOHOL (AS AN EXCEPTION TO NOTE 4) AND ALLOW TO DRY FOR FIVE MINUTES MINIMUM; AFFIX VELCRO, APPROPRIATE FIND NUMBER, AT LOCATION AND ORIENTATION INDICATED. ALLOW VELCRO ADHESIVE TO CURE 30 HOURS MINIMUM AT AMBIENT TEMPERATURE AFTER AFFIXING.

[29] VACUUM AND/OR BRUSH SURFACES CLEAN PRIOR TO ASSEMBLY.

[30] SUGGESTED SOURCE OF SUPPLY
SEASTROM MANUFACTURING CO., INC.
701 SONOMA AVE.
GLENDALE, CA 91201-2495

For Reference Only

## LEGEND

FIT = FUNGAL PATHOGENESIS, TUMORIGENESIS, AND EFFECTS OF HOST IMMUNITY IN THE SPACE ENVIRONMENT.

| DASH NO | NEXT ASSEMBLY | USED ON |
|---|---|---|
| 001 | 103566 | FIT |

| | | |
|---|---|---|
| PRODUCT ASSURANCE: R. JUNNILA | DRAWN: D. WOLFF 2/25/05 | LOCKHEED MARTIN SPACE OPERATIONS, P.O. Box 168 Moffett Field, California 94035 |
| APPROVED: | CHECKED: D. HERFURTH | UNLESS OTHERWISE SPECIFIED LINEAR TOLERANCES .XXX= ±.005 .XX= ±.01 .X= ±.1 FINISH: 63 √ ANGLES= ±1° LINEAR DIMENSIONS IN INCHES |
| APPROVED: | DESIGN SUPV: J. REIMER | FOOD TRAY CHANGEOUT ASSEMBLY, FIT |
| APPROVED: | PROJECT ENGR: LUKE SING | DO NOT SCALE DRAWING |
| APPROVED: | ENGRG MGR: D. TSAIRIDES | Ames Research Center |
| APPROVED: | MFG ENGR: | SCALE: NONE |
| | | SHEET 1 OF 7 |

| SIZE | DWG NO | REV |
|---|---|---|
| D | 103544 | E |

| 504 | 503 | 502 | 501 | 500 | 302 | 301 | 300 | 001 | CAGE CODE | PART NUMBER | NOMENCLATURE OR DESCRIPTION | MATERIAL SIZE | MATERIAL SPECIFICATION OR MAKE FROM | SH ZONE | FIND NO |
|---|---|---|---|---|---|---|---|---|---|---|---|---|---|---|---|
| AR | | | | | | | | | 11153 | 185197 | VELCRO, HOOK | 1.0 IN WIDE | NYLON [27] | | 41 |
| X | | | | | | | | 1 | | 103544-504 | FASTENER, HOOK | | | | 40 |
| | | | | | REF | REF | REF | | | | INSERT, SCREW THREAD | | NASM33537 | | 39 |
| | | | | | | | | REF | | | INSERT, SCREW-THREAD, HELICAL COIL | | NASM8846 | | 38 |
| | | | | REF | REF | | | | | | LEXAN SHEET PROCESSING & FABRICATION SPECIFICATIONS. | | ADS-87-00-019 | | 37 |
| | | | | | | | | 1 | | AE-04815-0030 | LABEL | | | 3 B6 | 36 |
| | | | | | | | | 1 | | AE-04815-0025 | LABEL | | | 3 C7 | 35 |
| | | | | | | | | 1 | | AE-04815-0024 | LABEL | | | 3 B3 | 34 |
| | | | | | | | | 1 | | AE-04815-0023 | LABEL | | | 3 D5 | 33 |
| | | | | | | | | 1 | | AE-04815-0022 | LABEL | | | 3 B6 | 32 |
| | | | | | | | | 1 | | AE-04815-0021 | LABEL | | | 3 C7 | 31 |
| | | | | | | | | 1 | | AE-04815-0020 | LABEL | | | 3 C7 | 30 |
| | | | | | | | | 1 | | AE-04815-0019 | LABEL | | | 3 C7 | 29 |
| | | | | | | | | 1 | | AE-04815-0018 | LABEL | | | 3 C7 | 28 |
| | | | | | | | | 1 | | AE-04815-0017 | LABEL | | | 3 C7 | 27 |
| | | | | AR | AR | | | | 72799 | F2104 | SHEET, CLEAR, LEXAN | .187THK | A-A59502 [17] | 5 D1 | 26 |
| | | | AR | | | AR | AR | | | | PLATE, WHITE | 1.00 THK | DELRIN ASTM-D4181 [16] | 4 D2 | 25 |
| | | AR | | | | | | | 3K664 | 103VT | CORD, VITON | .103 DIA | [15] | 6 B7 | 24 |
| | AR | | | | | | | | 3A054 | 7478K81 | SHRINK TUBING | .125 DIA | KYNAR [12] | 6 B3 | 23 |
| | | | | | | | | 2 | 83553 | C0120-016-0380-S | SPRING | | CRES [14] | 3 B5 | 22 |
| | | | | | | | 4 | | 8L384 | 3585-2CN246 | HELICOIL | 8-32UNC X 1.5ø | CRES [13] | 4 B2 | 21 |
| | | | | | | 1 | 9 | | 8L384 | 3585-04CN224 | HELICOIL | 4-40UNC X 2ø | CRES [13] | 4 D5 | 20 |
| | | | | | 3 | | | | 8L384 | 3585-02CN172 | HELICOIL | 2-56UNC X 2ø | CRES [13] | 5 A4 | 19 |
| | | | | | | | | 4 | 83553 | U125-0040-S | WASHER, SPRING | | [14] | 3 C4 | 18 |
| | | | | | | | | 4 | | 5710-21-10 | WASHER, FLAT | No. 5 | CRES [30] | 3 C4 | 17 |
| | | | | | | | | 2 | 3A054 | 98019A309 | WASHER, FLAT | No. 4 | CRES [12] | 3 C2 | 16 |
| | | | | | | | | 2 | 3A054 | 91400A106 | SCREW, PAN HD. | 4-40UNC X .25 | CRES [12] | 3 C2 | 15 |
| | | | | | | | | 4 | 3A054 | 93085A108 | SCREW, FT HD, 100°, CROSS RECESS | 4-40UNC X .38 | CRES [12] | 3 D5 | 14 |
| | | | | | | | | 3 | 3A054 | 93085A021 | SCREW, FT HD, 100°, CROSS RECESS | 2-56UNC X .38 | CRES [12] | 3 B5 | 13 |
| | | | | | | | | 4 | 0MTR9 | DBS-A1-3 | SCREW, SHOULDER | ø1/8 X 1/4 LG | CRES [11] | 3 C4 | 12 |
| | | | | | | | | 2 | 0MTR9 | DFS-A1-14 | SCREW, SET | 8-32UNC X .38 | CRES [11] | 3 C3 | 11 |
| | | | | | | | | 1 | 3A054 | 30345T2 | LANYARD | | CRES [12] | 3 C3 | 10 |
| | | | | | | | | 2 | 01226 | SSB50A | BALL PLUNGER | 8-32UNC | CRES [19] | 3 C7 | 9 |
| | X | | | | | | | 2 | | 103544-503 | TUBING | | | 3 C3 | 8 |
| | | X | | | | | | 2 | | 103544-502 | DETENT | | | 3 D5 | 7 |
| | | | X | | | | | 1 | | 103544-501 | TAB | | | 3 B7 | 6 |
| | | | | X | | | | 1 | | 103544-500 | COVER, RIGHT HAND | | | 3 D7 | 5 |
| | | | | | X | | | 1 | | 103544-302 | COVER, LEFT HAND | | | 3 B7 | 4 |
| | | | | | | X | | 1 | | 103544-301 | T-BAR | | | 3 B2 | 3 |
| | | | | | | | X | 1 | | 103544-300 | BASE | | | 3 D3 | 2 |
| | | | | | | | | X | | 103544-001 | FOOD TRAY CHANGEOUT ASSEMBLY, FIT | | | 3 A5 | 1 |

QTY

DO NOT SCALE DRAWING

NASA NASA/AMES RESEARCH CENTER

SCALE: NONE

SHEET 2

SIZE D DWG NO 103544 REV E

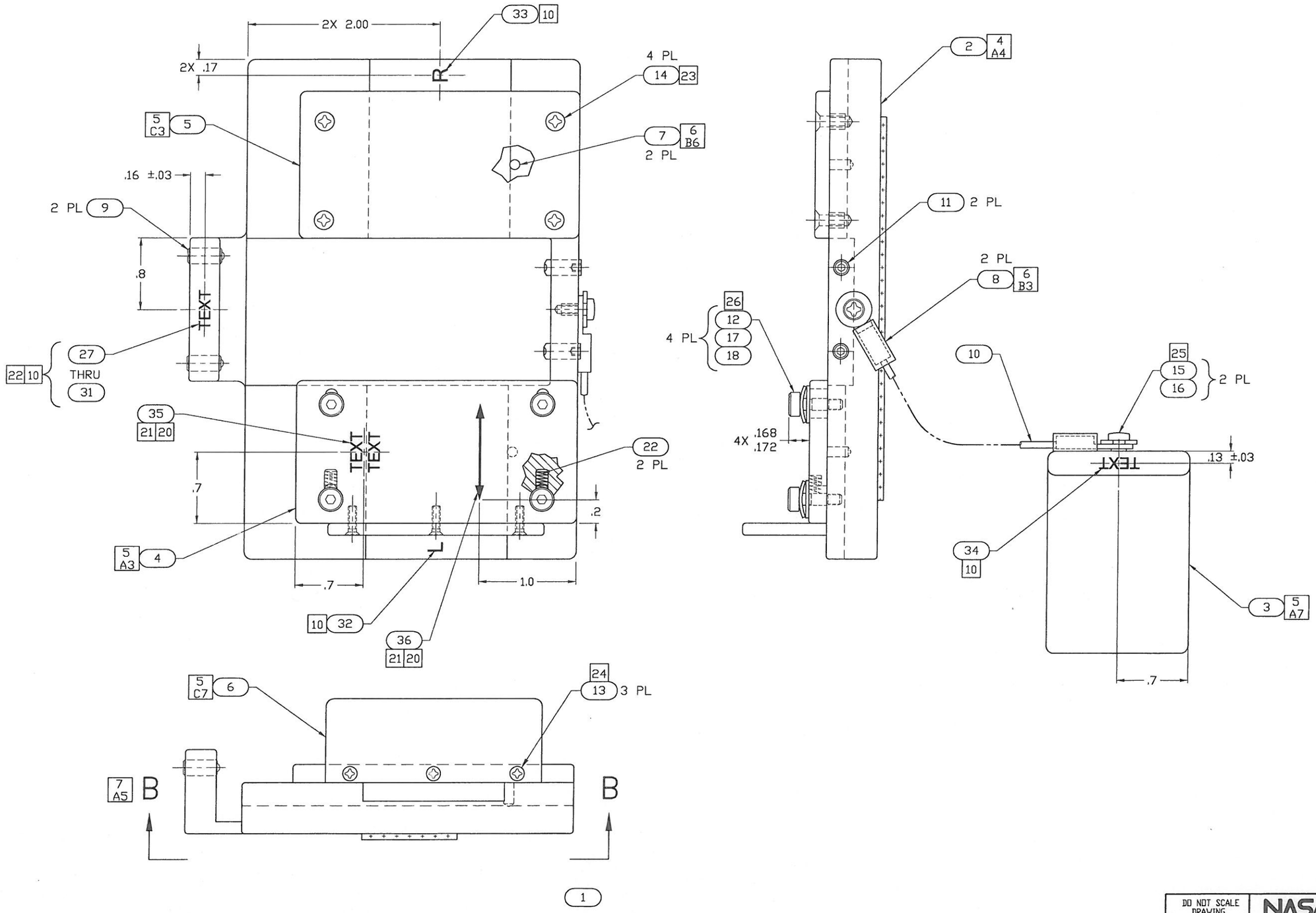


| | | | |
|---|---|---|---|
| DO NOT SCALE DRAWING | NASA NASA/AMES RESEARCH CENTER | | |
| SCALE: NONE | SIZE D | DWG NO 103544 | REV E |
| SHEET 3 | | | |

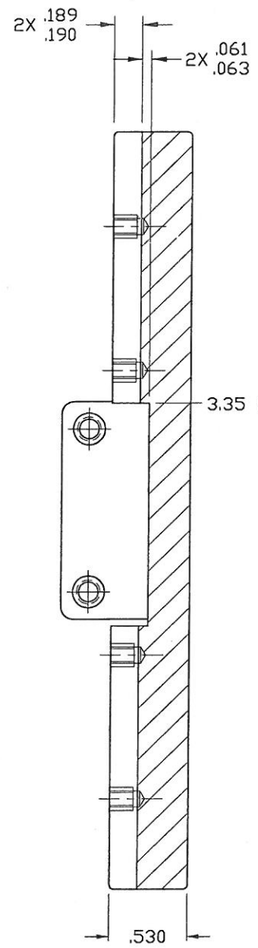


SECTION A–A

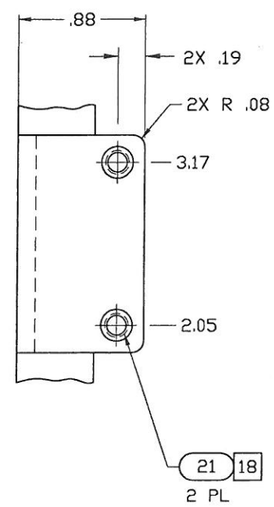


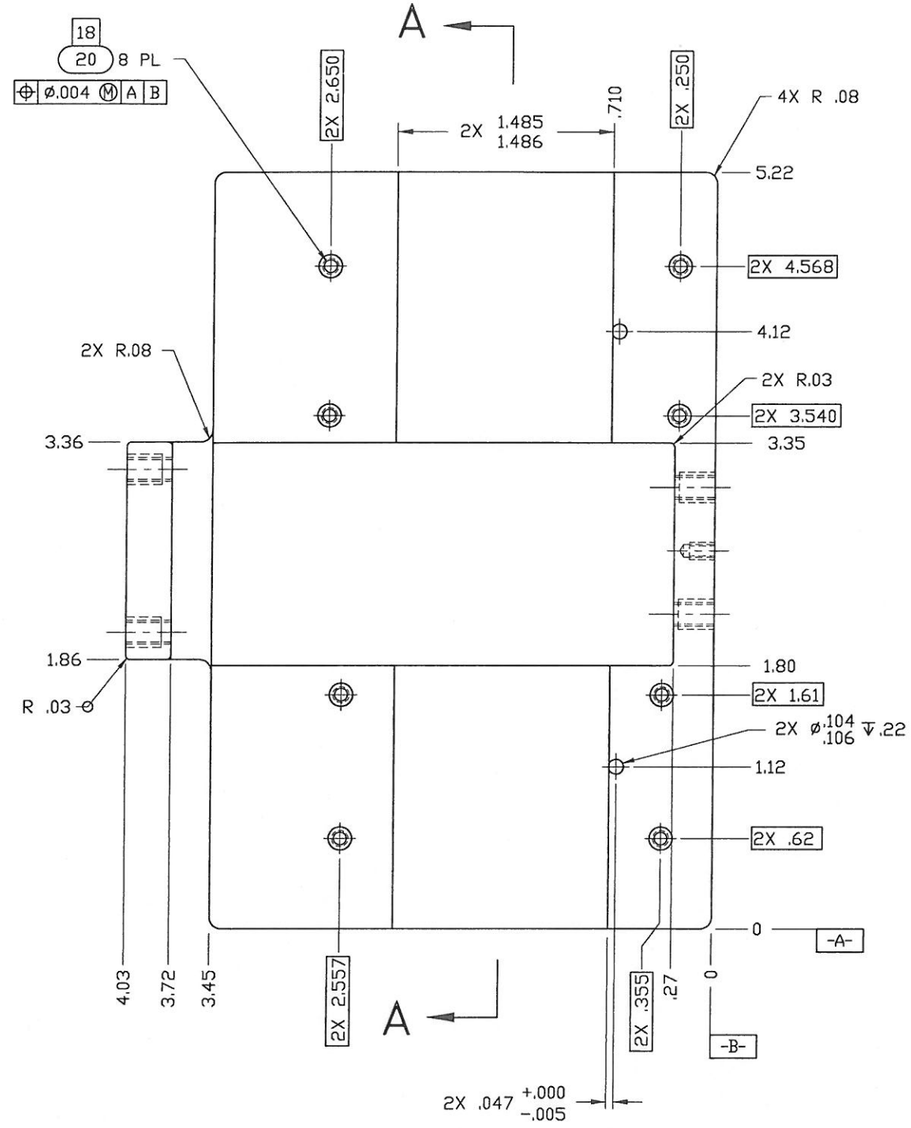


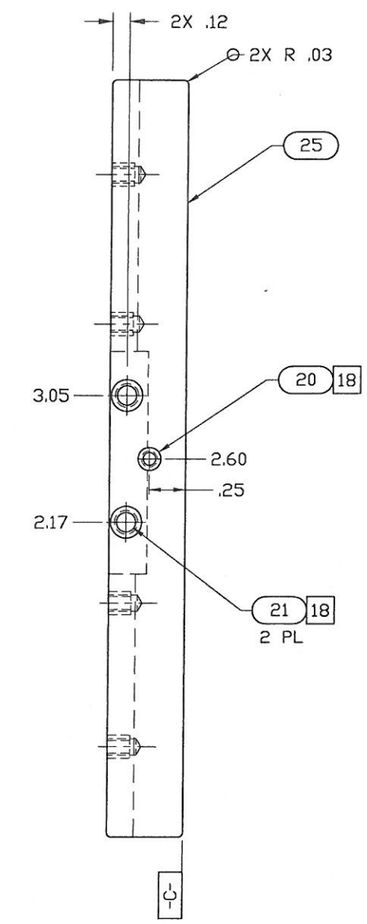


2 3 D3

| | |
|---|---|
| DO NOT SCALE DRAWING | NASA NASA/AMES RESEARCH CENTER |
| SCALE: 2/1 | SIZE D DWG NO 103544 REV E |
| SHEET 4 | |

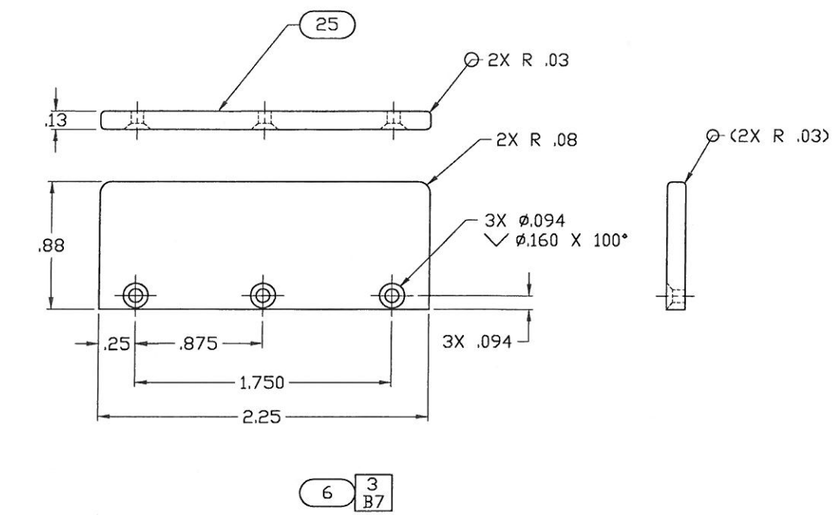


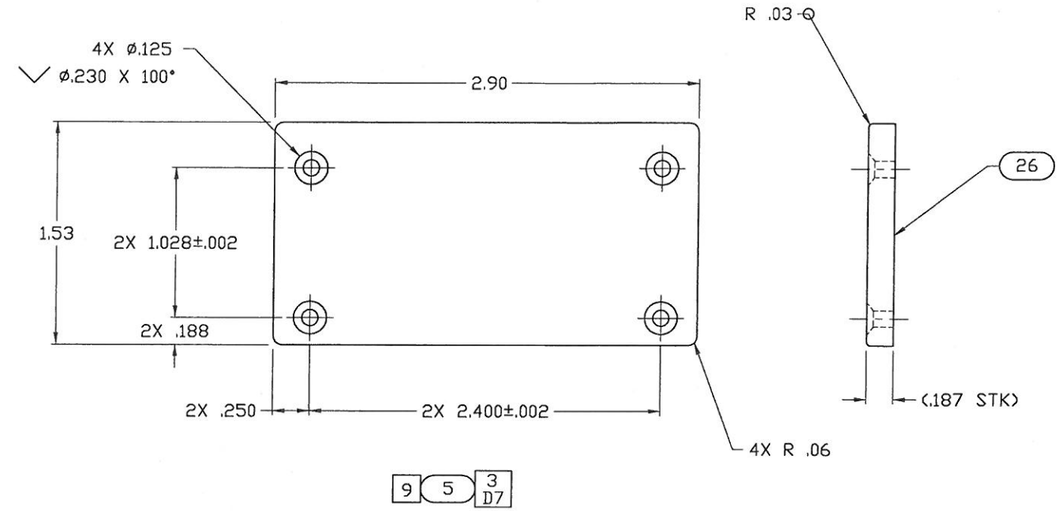


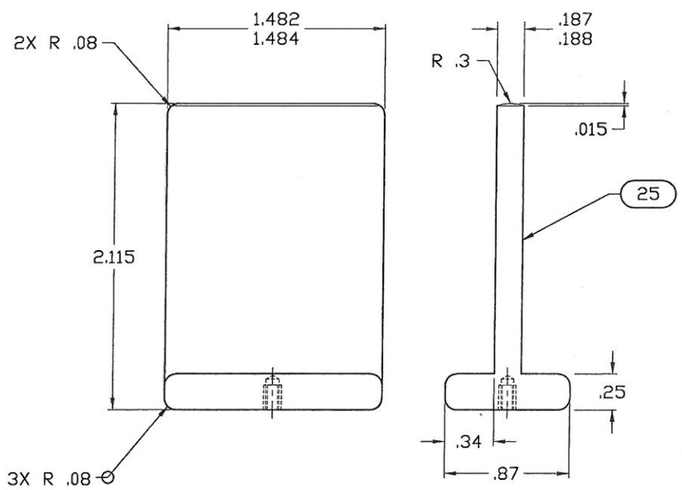


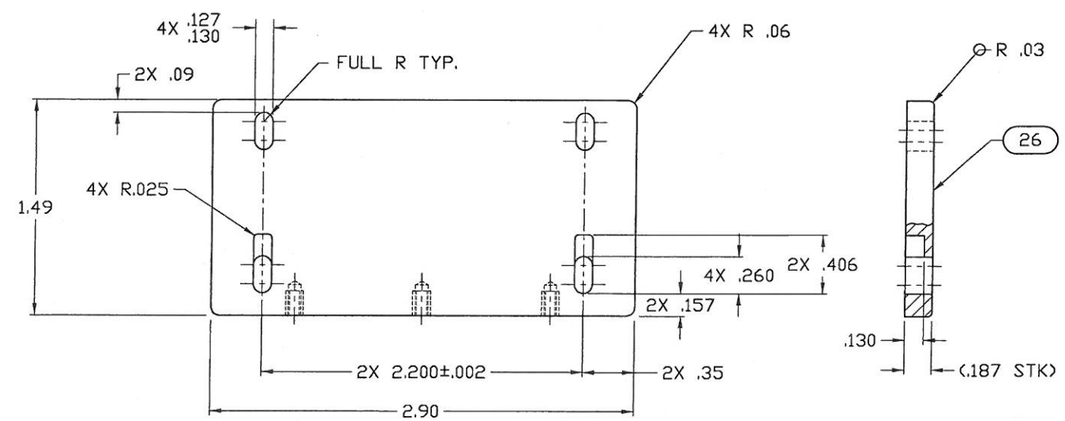


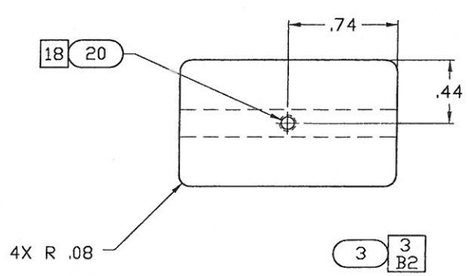


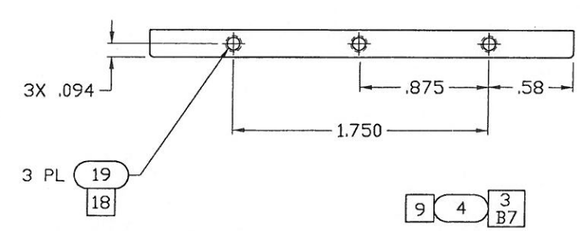


| | | | |
|---|---|---|---|
| DO NOT SCALE DRAWING | NASA NASA/AMES RESEARCH CENTER | | |
| SCALE: NONE | SIZE D | DWG NO 103544 | REV E |
| SHEET 5 | | | |

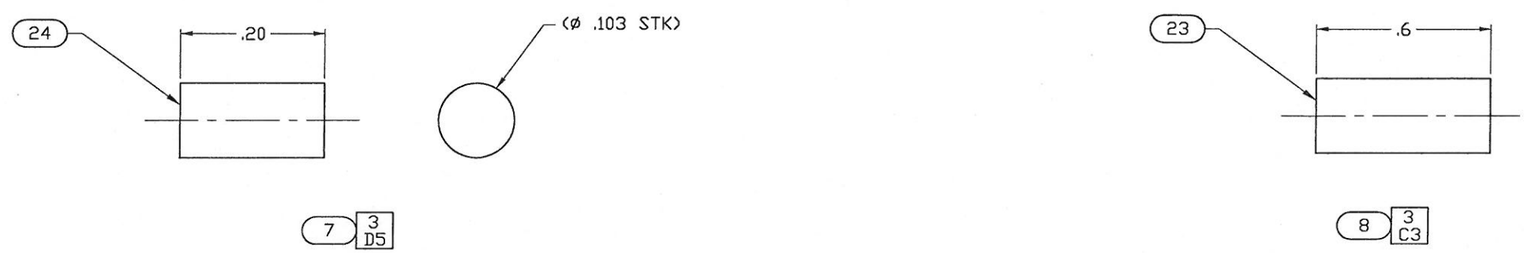


SCALE: 10/1

| | |
|---|---|
| DO NOT SCALE DRAWING | NASA NASA/AMES RESEARCH CENTER |
| SCALE: 4/1 | SIZE D · DWG NO 103544 · REV E |
| SHEET 6 | |

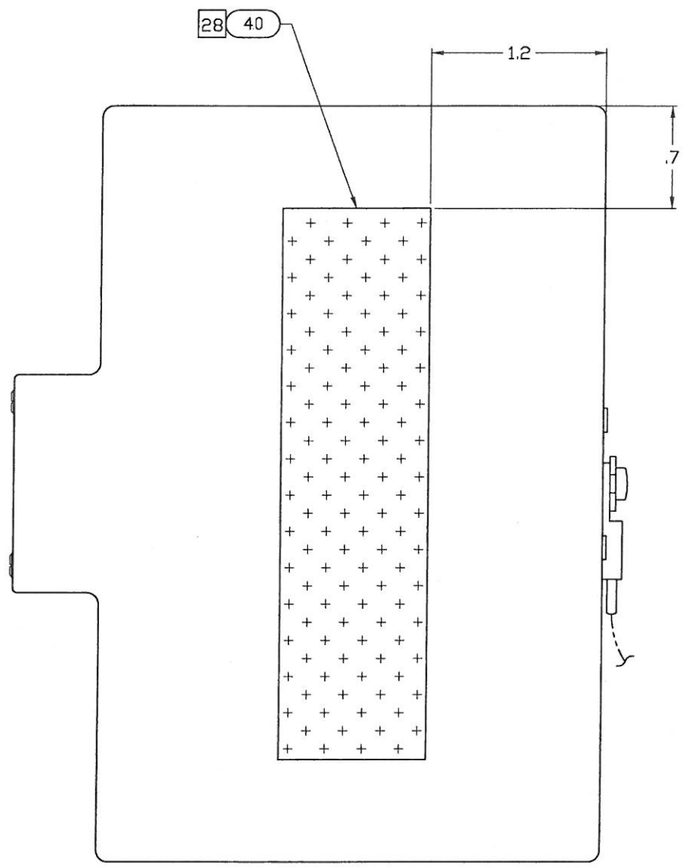


SECTION B–B 3 A7

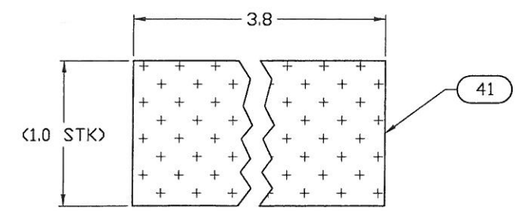


40 29