| REVISIONS | | | | |
|---|---|---|---|---|
| REV | ZONE | DESCRIPTION | APPROVAL | REL DATE |
| A | 1-4D<br>1-6B<br>1-3A | 1) REMOVE NOTES 10, 11 & 12 AND FLAGS. | DAF ER34-0161 | 6/12/2013 |

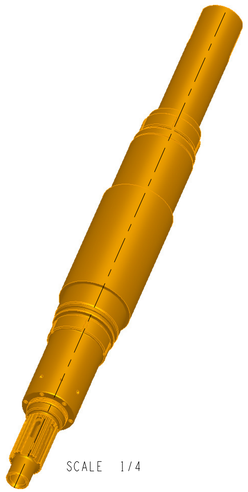

SCALE 1/4

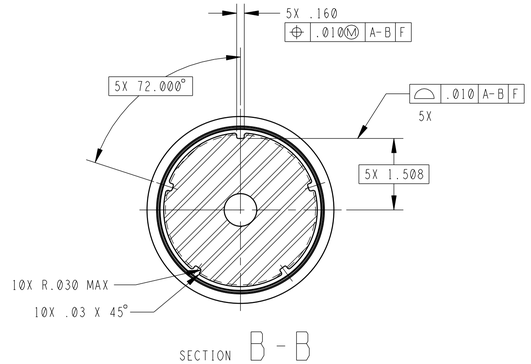


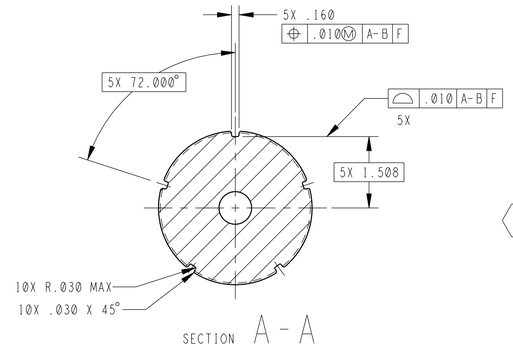


9. BALANCE PER ISO 1940/1-1986(E), TO A BALANCE QUALITY GRADE OF G2.5 AT A MAX SPEED OF 8000 RPM. REMOVE MATERIAL FROM THIS AREA A MINIMUM OF .50 FROM BALANCE PLANES I AND II AS REQUIRED. WHEN REMOVING MATERIAL, MAXIMUM MATERIAL REMOVED TO BE 1.00 DEEP WITH .10 MINIMUM FILLET RADIUS. THE PERMISSIBLE RESIDUAL UNBALANCE AT PLANE I AND/OR PLANE II SHALL NOT EXCEED THE TOTAL ALLOWABLE RESIDUAL UNBALANCE. AFTER BALANCING, DETERMINE AND RECORD THE AMOUNT OF DYNAMIC UNBALANCE PRESENT AT PLANES I & II.

10. REMOVED.

11. REMOVED.

12. REMOVED.

NOTES:

1. DIMENSIONING AND TOLERANCING PER ASME Y14.5M-1994.
   - UNLESS SEPARATE TOLERANCES ARE SHOWN, PERFECT ORIENTATION AT MMC FOR RELATED FEATURES IS REQUIRED.
   - GENERAL ANGULAR TOLERANCE DOES NOT APPLY TO IMPLIED 90 DEGREE ANGLES.
2. REMOVE ALL BURRS AND SHARP EDGES.
3. MATERIAL: 17-4 PH STAINLESS STEEL (UNS S17400), H900 PER SAE AMS 5643, SAE AMS 5622, OR ASTM A 564/A 564M.
4. 63 ✓ ALL MACHINED SURFACES UNLESS OTHERWISE SPECIFIED.
5. PASSIVATE PER SAE-AMS-2700, METHOD 1, TYPE 2.
6. IDENTIFY PART WITH PART NUMBER "MED03653-1" AND DRAWING REVISION PER SAE AS478-7A OCR-A12 IN APPROXIMATE LOCATION SHOWN, ORIENTATION OPTIONAL.
7. CLEAN AND MAINTAIN TO VISIBLY CLEAN - SENSITIVE LEVEL PER CxP 70145 PRIOR TO ASSEMBLY.
8. RESERVED.

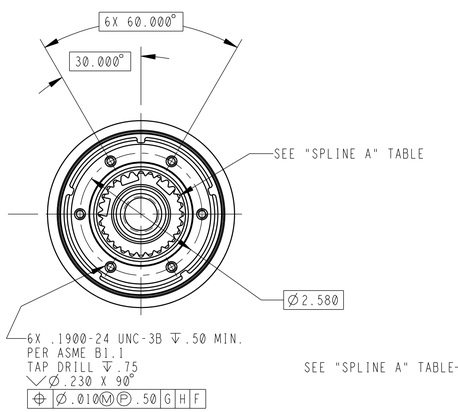


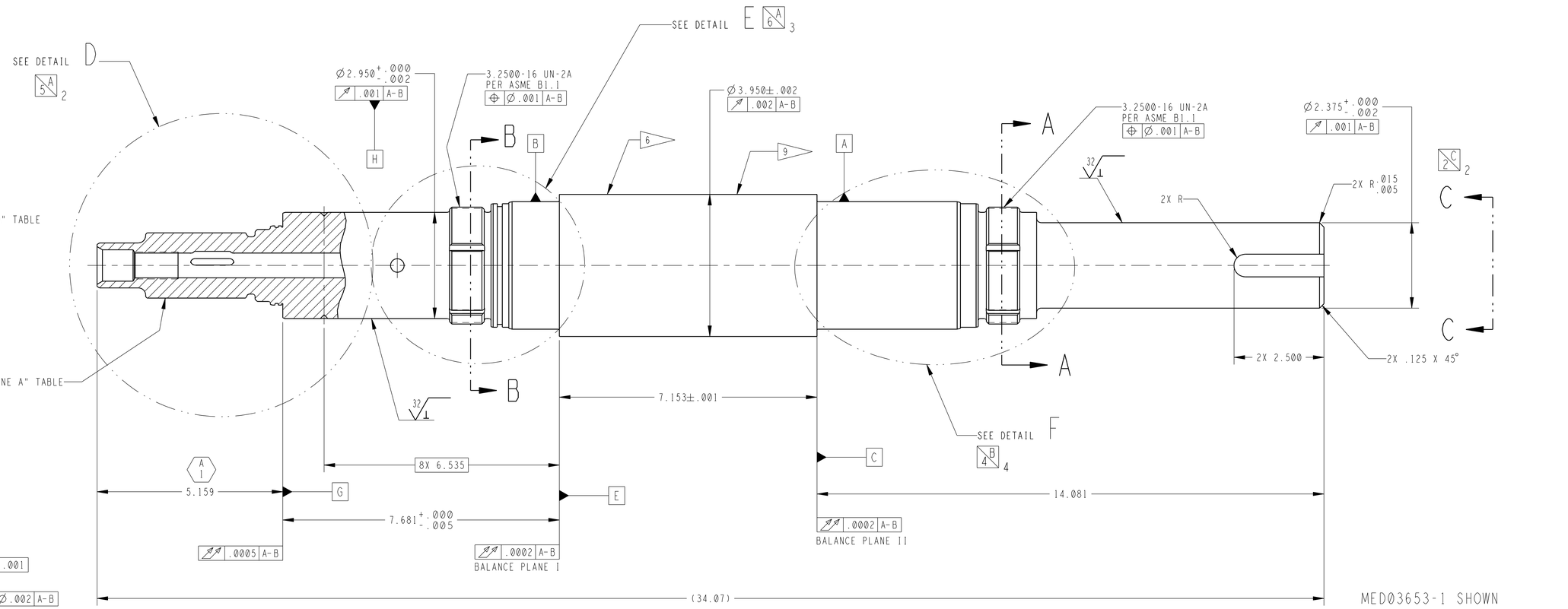


MED03653-1 SHOWN

| SPLINE A | |
|---|---|
| EXTERNAL INVOLUTE SPLINE DATA PER ANSI B 92.1-1996 WITH EXCEPTIONS | |
| TYPE OF FIT | FILLET ROOT SIDE FIT |
| CLASS OF TOLERANCE | 5 |
| NUMBER OF TEETH | 28 |
| DIAMETRAL PITCH | 16/32 |
| PRESSURE ANGLE | 30° |
| PITCH DIAMETER | 1.7500 ⌭ .001 |
| BASE DIAMETER | 1.5155 |
| MAJOR DIAMETER | 1.812 MAX<br>1.807 MIN ⌖ Ø.002 A-B |
| MINOR DIAMETER | 1.619 MAX<br>1.599 MIN ⌖ Ø.002 A-B |
| FORM DIAMETER | 1.6835 |
| FILLET RADIUS MIN | .016 MAX |
| ACTUAL CIRCULAR TOOTH THICKNESS | .0911 MIN |
| EFFECTIVE CIRCULAR TOOTH THICKNESS | .0940 MAX |
| MEASURING PIN DIAMETER | .1200 |
| MEASUREMENT OVER PINS | 1.9252 MIN, REF |
| TOTAL INDEX VARIATION | .0016 MAX |
| TOOTH-TO-TOOTH INDEX VARIATION | .0004 |
| LEAD VARIATION | .0004 |
| PROFILE VARIATION | +.0003/-.0005 |

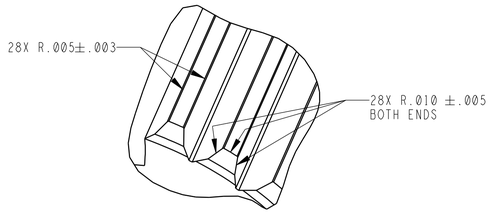


REFERENCE VIEW (TEETH)
SCALE 4/1

| | |
|---|---|
| MED03652-1 | J-2X OTP |
| NEXT ASSY | USED ON |
| APPLICATION (VERIFY IN RELEASE RECORDS) | |
| DRAWING STATE | Workgroup Approved |
| DRAWING VERSION | A.3 |
| DRAWING NUMBER | MED03653 |
| DRAWING INFORMATION | |

UNLESS OTHERWISE SPECIFIED DIMENSIONS ARE IN INCHES
TOLERANCES
DECIMALS .XX±0.03 .XXX±0.010
ANGLES ±0.5°
MATERIAL 3
HEAT TREATMENT NONE
FINISH 5 A 1

| | |
|---|---|
| MODEL STATE | Workgroup Approved |
| MODEL VERSION | A.1 |
| MODEL NUMBER | MED03653-1 |
| MODEL INFORMATION | |

| ORIGINAL DRAWING APPROVALS | |
|---|---|
| DESIGN ORG. | ER34 |
| DRAWN BY | DWIGHT GOODMAN |
| ENGINEER | DWIGHT GOODMAN |
| CHECKER | Do Not Modify (Release data) |
| MATERIALS | Do Not Modify (Release data) |
| STRESS | |
| S & MA | Do Not Modify (Release data) |
| PRODUC-MANUF | |
| PRODUC-CONTR | Do Not Modify (Release data) |
| NEXT ASSEMBLY | Do Not Modify (Release data) |
| DESN BRANCH CHF | D WHITTEN |
| RELEASE DATE | 2010/04/28 |

GEORGE C. MARSHALL SPACE FLIGHT CENTER
NATIONAL AERONAUTICS AND SPACE ADMINISTRATION
HUNTSVILLE, ALABAMA

SHAFT, DRIVE, HOLLOW

| SIZE | CODE | DRAWING NUMBER | REV |
|---|---|---|---|
| D | 339B2 | MED03653 | A |

SCALE 5/8 MASS (UNIT WEIGHT) 65.726 SHEET 1 of 5

MSFC_DWG_D_FORMAT_REV(A) (AUGUST, 2009)

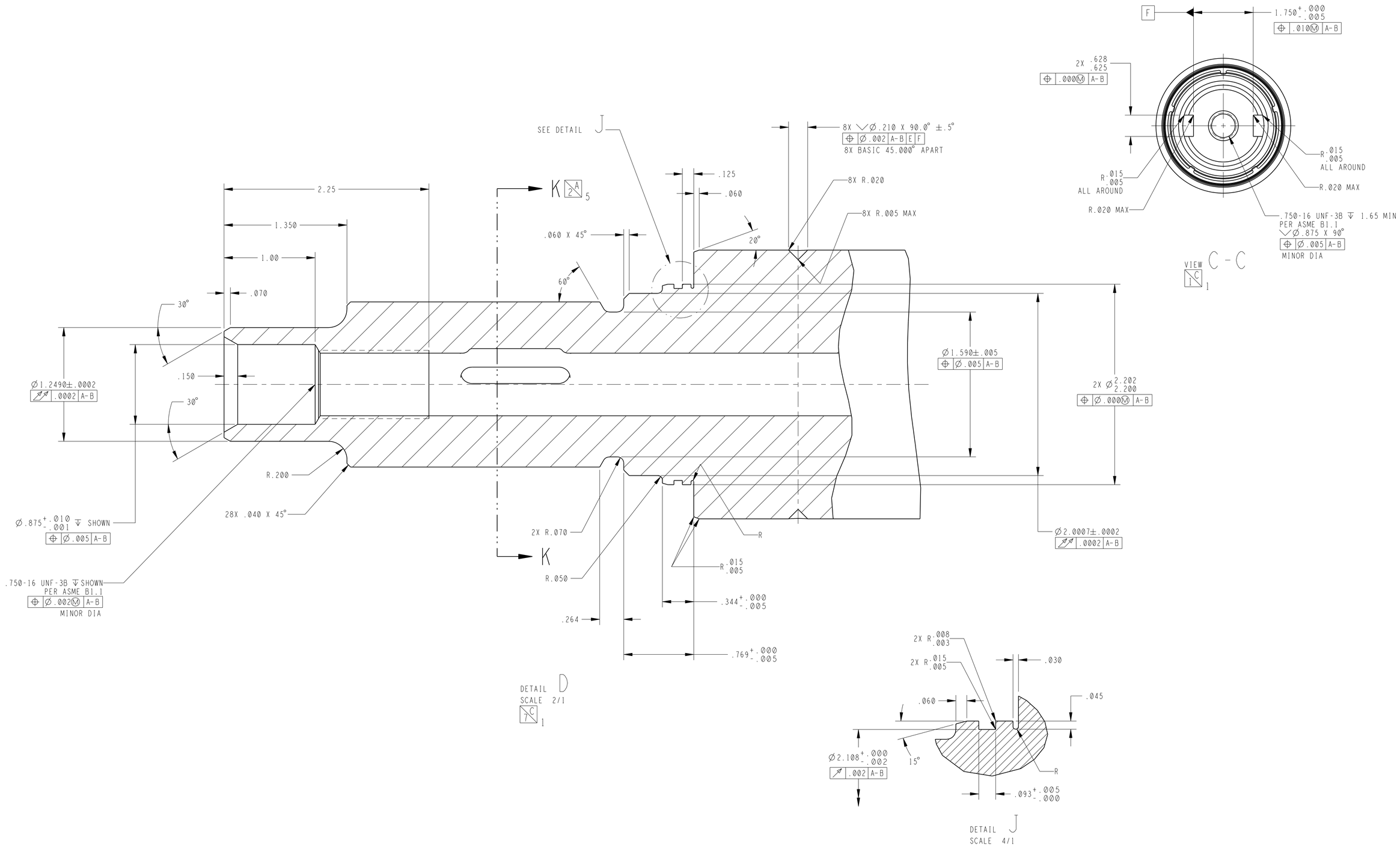


| | | | | |
|---|---|---|---|---|
| DRAWING STATE Workgroup Approved | SIZE | CODE | DRAWING NUMBER | REV |
| DRAWING VERSION A.3 | D | 339B2 | MED03653 | A |
| DRAWING INFORMATION | | | SHEET 2 OF 5 | |

MSFC_DWG_D_FORMAT_REV(A) (AUGUST, 2009)

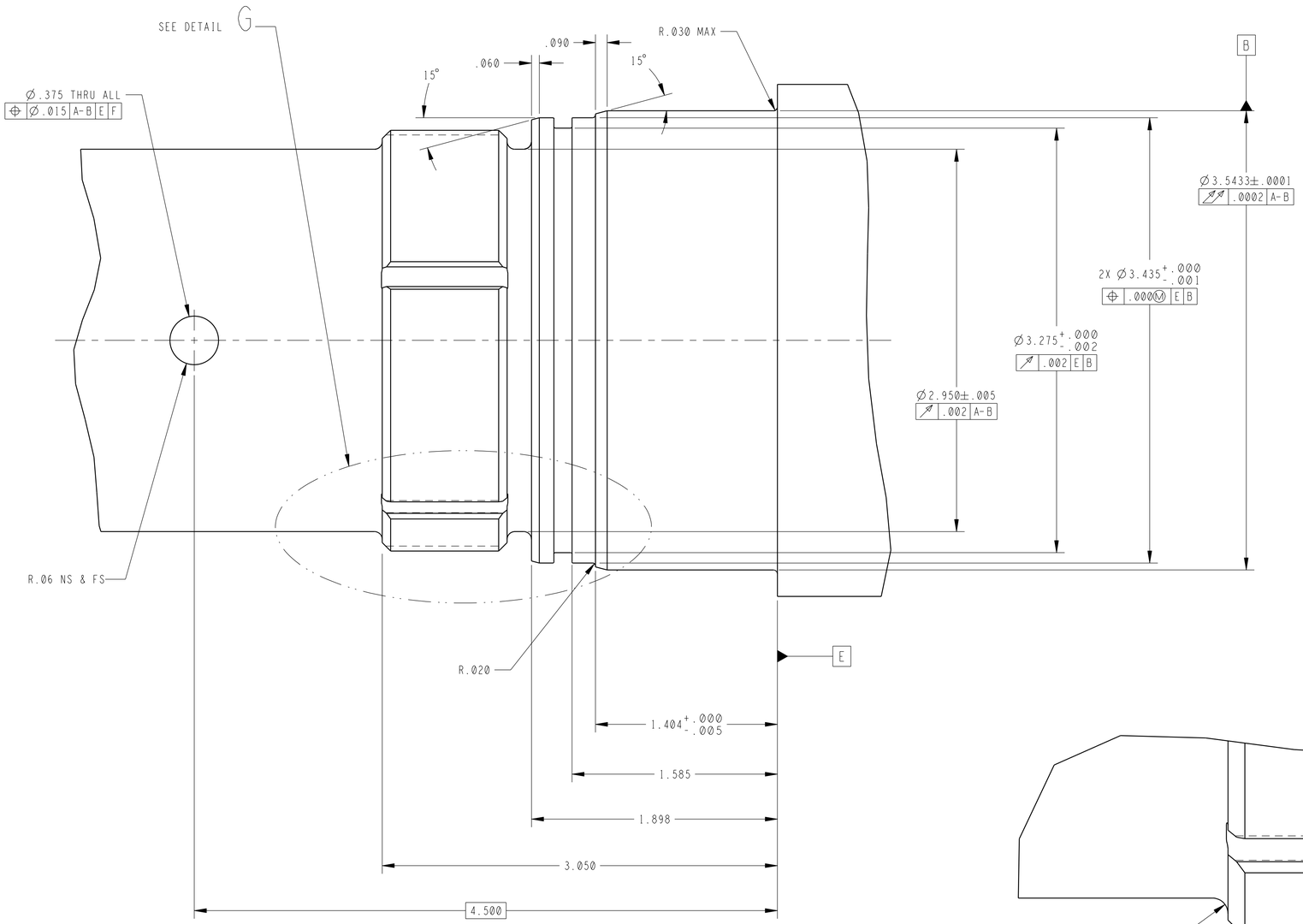


DETAIL E
SCALE 2/1
4 C 1

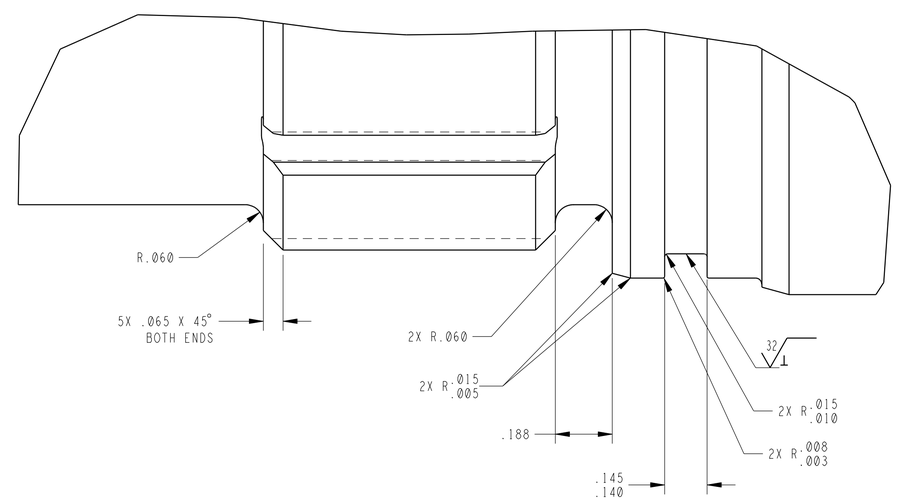


DETAIL G
SCALE 4/1

| DRAWING STATE Workgroup Approved | SIZE | CODE | DRAWING NUMBER | REV |
|---|---|---|---|---|
| DRAWING VERSION A.3 | D | 339B2 | MED03653 | A |
| DRAWING INFORMATION | | | SHEET 3 OF 5 | |

MSFC_DWG_D_FORMAT_REV(A) (AUGUST, 2009)

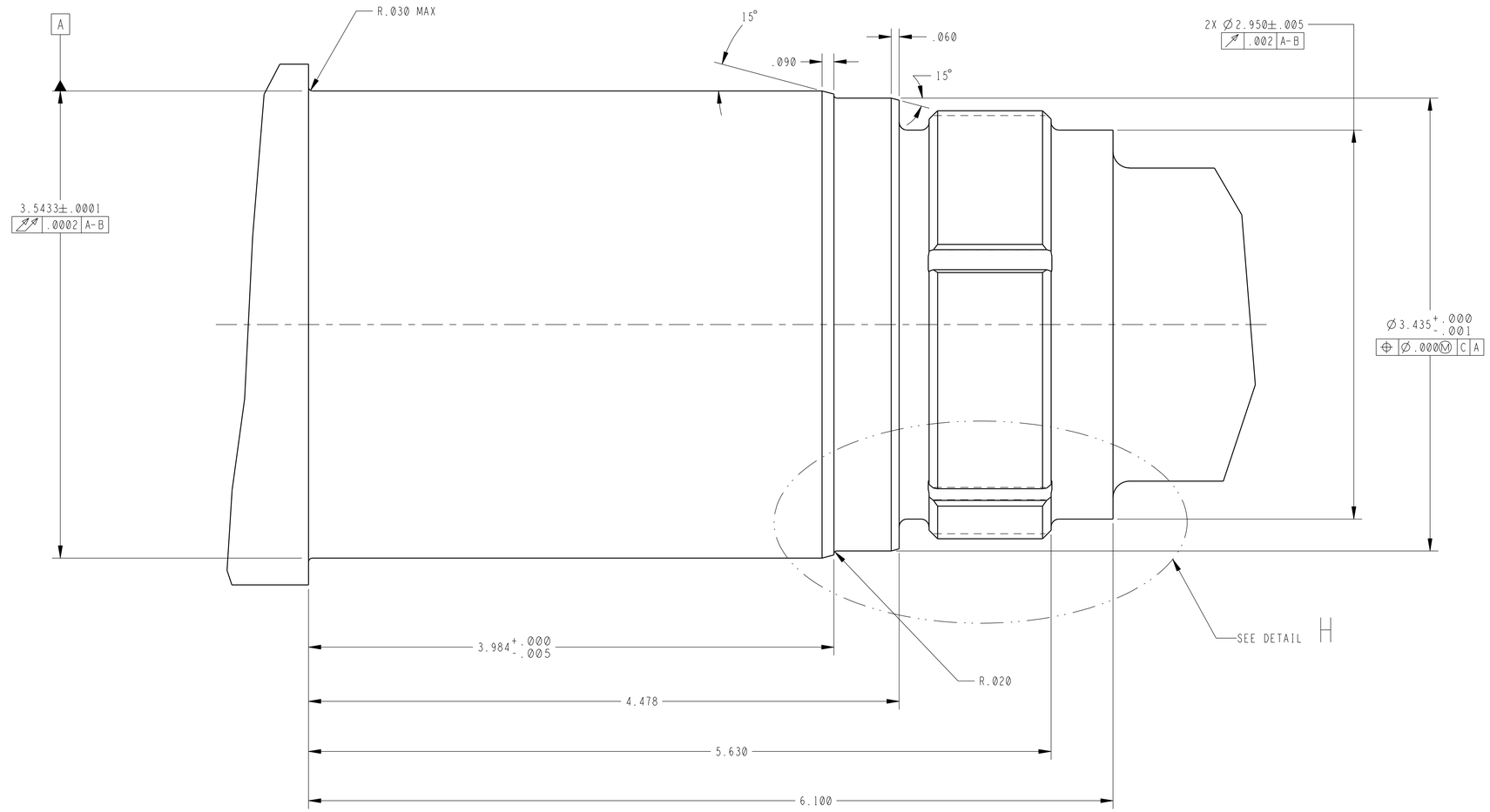


DETAIL F
SCALE 2/1
3 B 1

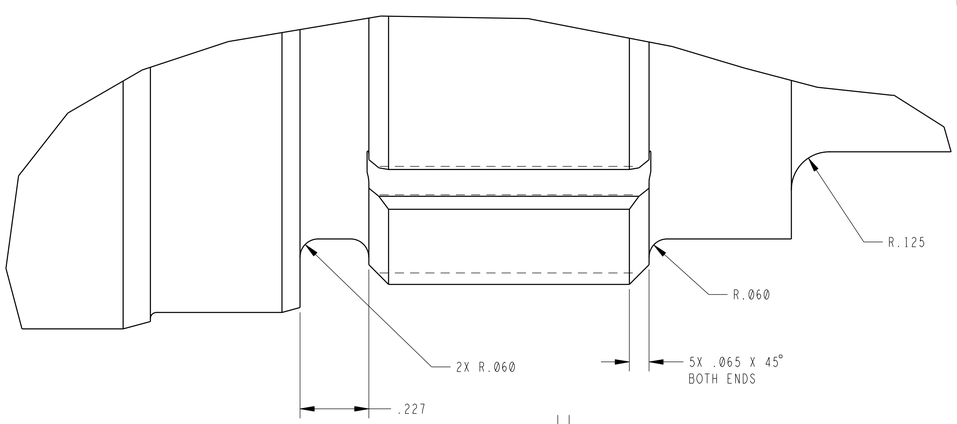


DETAIL H
SCALE 4/1

| | | | | |
|---|---|---|---|---|
| DRAWING STATE Workgroup Approved | SIZE | CODE | DRAWING NUMBER | REV |
| DRAWING VERSION A.3 | D | 339B2 | MED03653 | A |
| DRAWING INFORMATION | | | SHEET 4 OF 5 | |

MSFC_DWG_D_FORMAT_REV(A) (AUGUST, 2009)

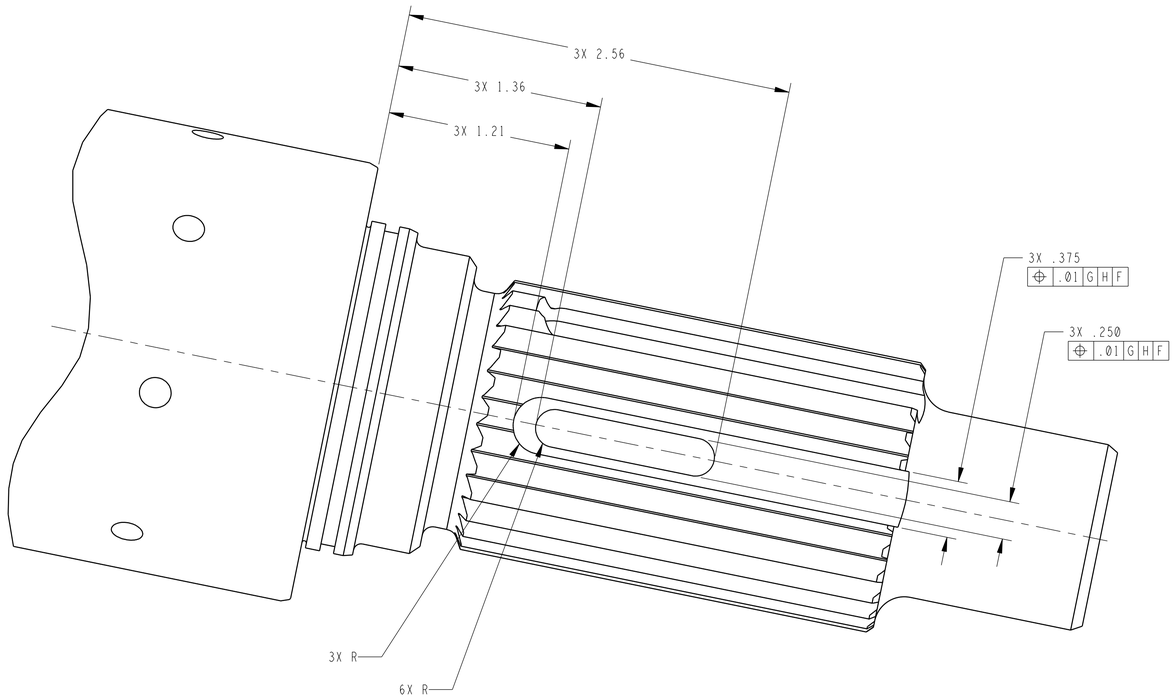


VIEW L - L

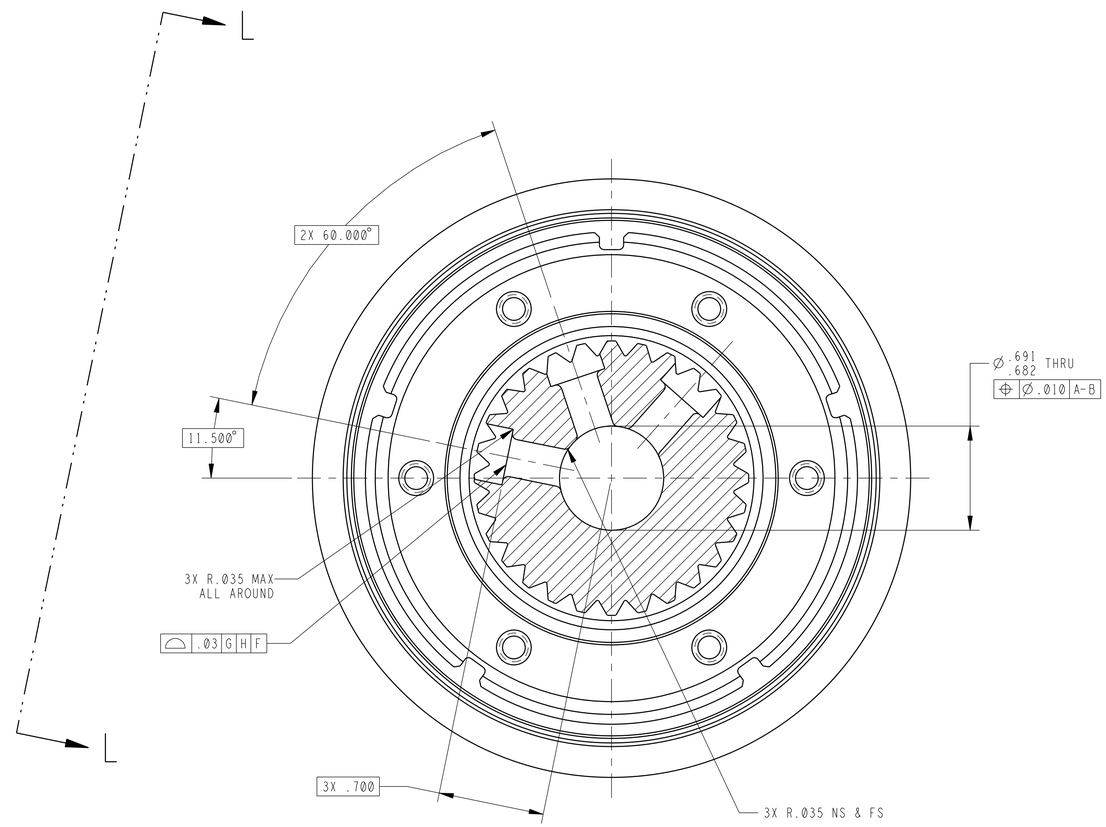


SECTION K - K
SCALE 2/1
5 C 2

| | | | | |
|---|---|---|---|---|
| DRAWING STATE Workgroup Approved | SIZE | CODE | DRAWING NUMBER | REV |
| DRAWING VERSION A.3 | D | 339B2 | MED03653 | A |
| DRAWING INFORMATION | | | SHEET 5 OF 5 | |

MSFC_DWG_D_FORMAT_REV(A) (AUGUST, 2009)