REVISIONS			
REV	DESCRIPTION	APPROVAL	REL DATE

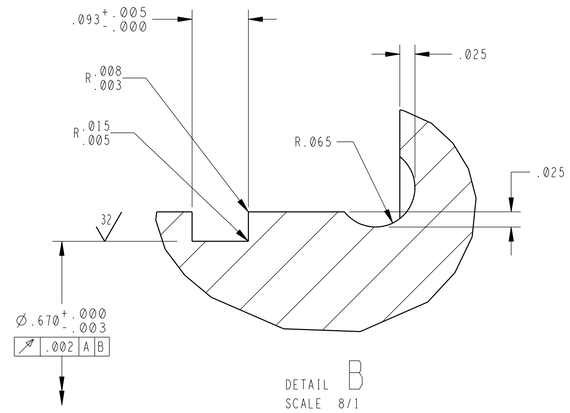

NOTES:

1. DRAWING PREPARED IN ACCORDANCE WITH ASME Y14.41-2003 EXCEPT AS NOTED BELOW:
   - UNLESS SEPARATE TOLERANCES ARE SHOWN, PERFECT ORIENTATION AT MMC FOR RELATED FEATURES IS REQUIRED.
   - GENERAL ANGULAR TOLERANCE DOES NOT APPLY TO IMPLIED 90 DEGREE ANGLES.
   - FOR PRODUCT DEFINITION DATA SET, REFERENCE MED03656-1 IN MSFC DDMS.
   - ALL DIMENSIONS ARE MODELED AT MEAN VALUE, EXCEPT DRILLED/REAMED HOLES.
   - IGNORE ALL MODEL ANNOTATIONS.
   - AXONOMETRIC VIEWS SHALL NOT BE ANNOTATED.
2. REMOVE ALL BURRS AND SHARP EDGES.
3. MATERIAL: BAR PER SAE AMS-5737.
4. 125 √ ALL MACHINED SURFACES UNLESS OTHERWISE SPECIFIED.
5. PASSIVATE PER SAE-AMS-2700, METHOD 1, TYPE 2.
6. IDENTIFY PART WITH PART NUMBER PER MIL-STD-130, ENGRAVE PART NUMBER IN ACCORDANCE WITH SAE-AS478-3 USING .13 INCH HIGH CHARACTERS. LOCATE APPROXIMATELY AS SHOWN.
7. CLEAN AND MAINTAIN TO VISIBLY CLEAN - SENSITIVE LEVEL PER CxP 70145 PRIOR TO ASSEMBLY.
8. RESERVED.

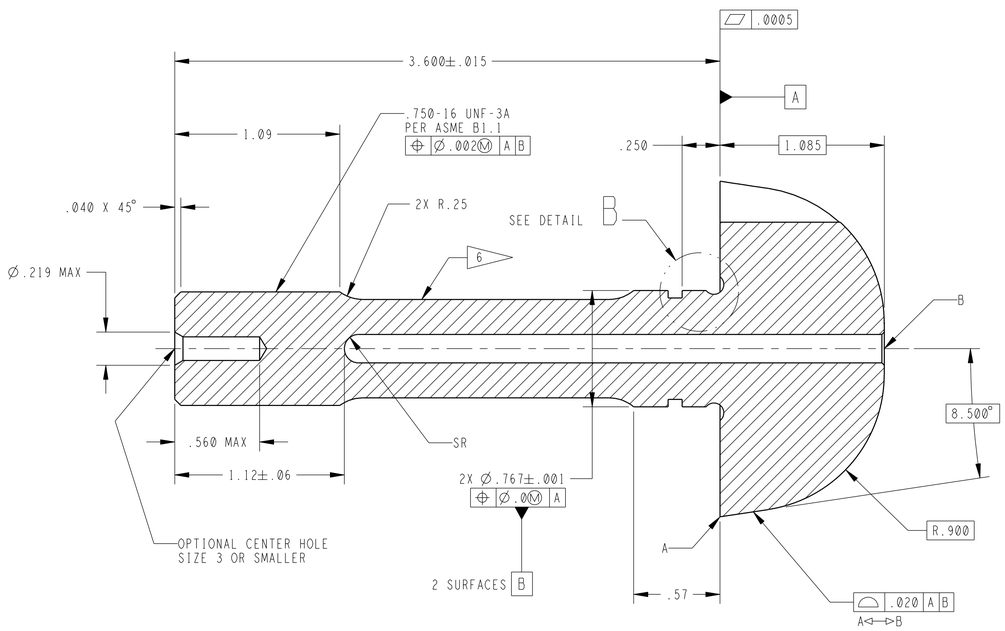

SECTION A - A

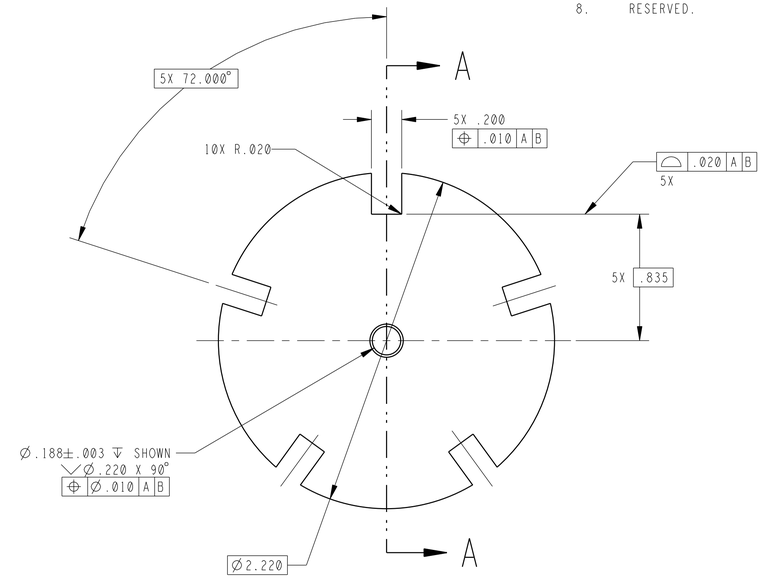

MED03656-1 SHOWN

MED03651-1	J-2X OTP		
NEXT ASSY	USED ON		
APPLICATION (VERIFY IN RELEASE RECORDS)			
DRAWING STATE	Workgroup Approved	MODEL STATE	Workgroup Approved
DRAWING VERSION	-.1	MODEL VERSION	-.1
DRAWING NAME	MED03656	MODEL NAME	MED03656-1
DRAWING INFORMATION		MODEL INFORMATION	

UNLESS OTHERWISE SPECIFIED DIMENSIONS ARE IN INCHES

TOLERANCES

DECIMALS	ANGLES
.XX± .03 .XXX± .010	±.5°

MATERIAL 3.

HEAT TREATMENT

FINISH 5.

REV REL DATE	
ORIGINAL DRAWING APPROVALS	
DESIGN ORG.	ER34
DRAWN BY	DWIGHT GOODMAN
ENGINEER	DWIGHT GOODMAN
CHECKER	Do Not Modify (Release data)
MATERIALS	Do Not Modify (Release data)
STRESS	Do Not Modify (Release data)
S & MA	Do Not Modify (Release data)
PRODUC-MANUF	Do Not Modify (Release data)
PRODUC-FAB	Do Not Modify (Release data)
PRODUC-CONTR	Do Not Modify (Release data)
DESN BRANCH CHF	D WHITTEN
RELEASE DATE	2010/04/28

GEORGE C. MARSHALL SPACE FLIGHT CENTER

NATIONAL AERONAUTICS AND SPACE ADMINISTRATION
HUNTSVILLE, ALABAMA

BOLT, MODIFIED, INDUCER

SIZE	CODE	DRAWING NUMBER	REV
D	339B2	MED03656	-

SCALE 2/1 MASS (UNIT WEIGHT) 1.180 SHEET 1 OF 1

MSFC_DWG_D_FORMAT_REV(-) (MAY, 2008)