REVISIONS				
REV	ZONE	DESCRIPTION	APPROVAL	REL DATE
A	1-4D 1-6B 1-3A	1) REMOVE NOTES 10, 11 & 12 AND FLAGS.	DAF ER34-0161	6/12/2013

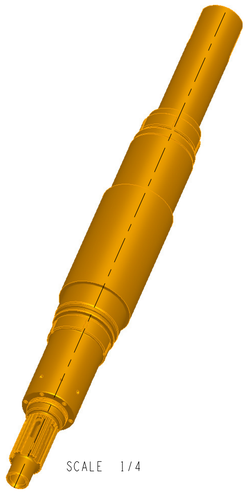

SCALE 1/4

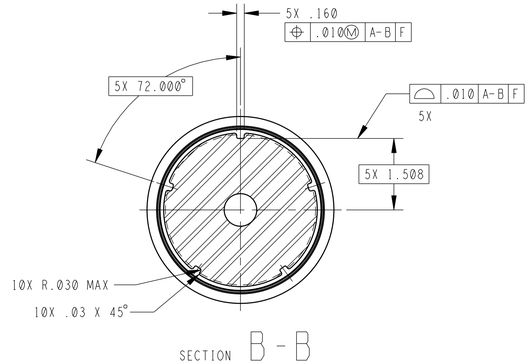

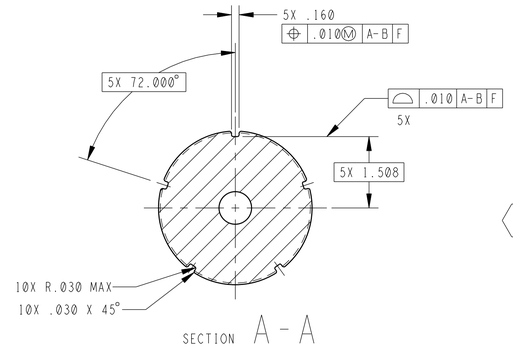

9. BALANCE PER ISO 1940/1-1986(E), TO A BALANCE QUALITY GRADE OF G2.5 AT A MAX SPEED OF 8000 RPM. REMOVE MATERIAL FROM THIS AREA A MINIMUM OF .50 FROM BALANCE PLANES I AND II AS REQUIRED. WHEN REMOVING MATERIAL, MAXIMUM MATERIAL REMOVED TO BE 1.00 DEEP WITH .10 MINIMUM FILLET RADIUS. THE PERMISSIBLE RESIDUAL UNBALANCE AT PLANE I AND/OR PLANE II SHALL NOT EXCEED THE TOTAL ALLOWABLE RESIDUAL UNBALANCE. AFTER BALANCING, DETERMINE AND RECORD THE AMOUNT OF DYNAMIC UNBALANCE PRESENT AT PLANES I & II.

10. REMOVED.

11. REMOVED.

12. REMOVED.

NOTES:

1. DIMENSIONING AND TOLERANCING PER ASME Y14.5M-1994.
   - UNLESS SEPARATE TOLERANCES ARE SHOWN, PERFECT ORIENTATION AT MMC FOR RELATED FEATURES IS REQUIRED.
   - GENERAL ANGULAR TOLERANCE DOES NOT APPLY TO IMPLIED 90 DEGREE ANGLES.
2. REMOVE ALL BURRS AND SHARP EDGES.
3. MATERIAL: 17-4 PH STAINLESS STEEL (UNS S17400), H900 PER SAE AMS 5643, SAE AMS 5622, OR ASTM A 564/A 564M.
4. 63 ✓ ALL MACHINED SURFACES UNLESS OTHERWISE SPECIFIED.
5. PASSIVATE PER SAE-AMS-2700, METHOD 1, TYPE 2.
6. IDENTIFY PART WITH PART NUMBER "MED03653-1" AND DRAWING REVISION PER SAE AS478-7A OCR-A12 IN APPROXIMATE LOCATION SHOWN, ORIENTATION OPTIONAL.
7. CLEAN AND MAINTAIN TO VISIBLY CLEAN - SENSITIVE LEVEL PER CxP 70145 PRIOR TO ASSEMBLY.
8. RESERVED.

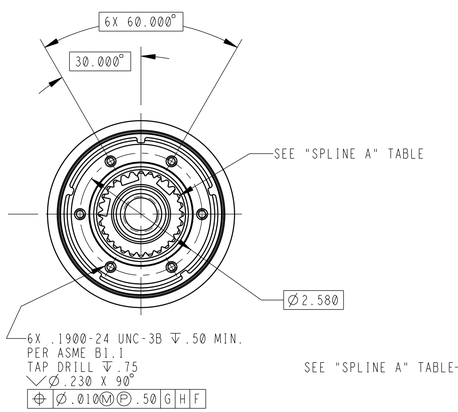

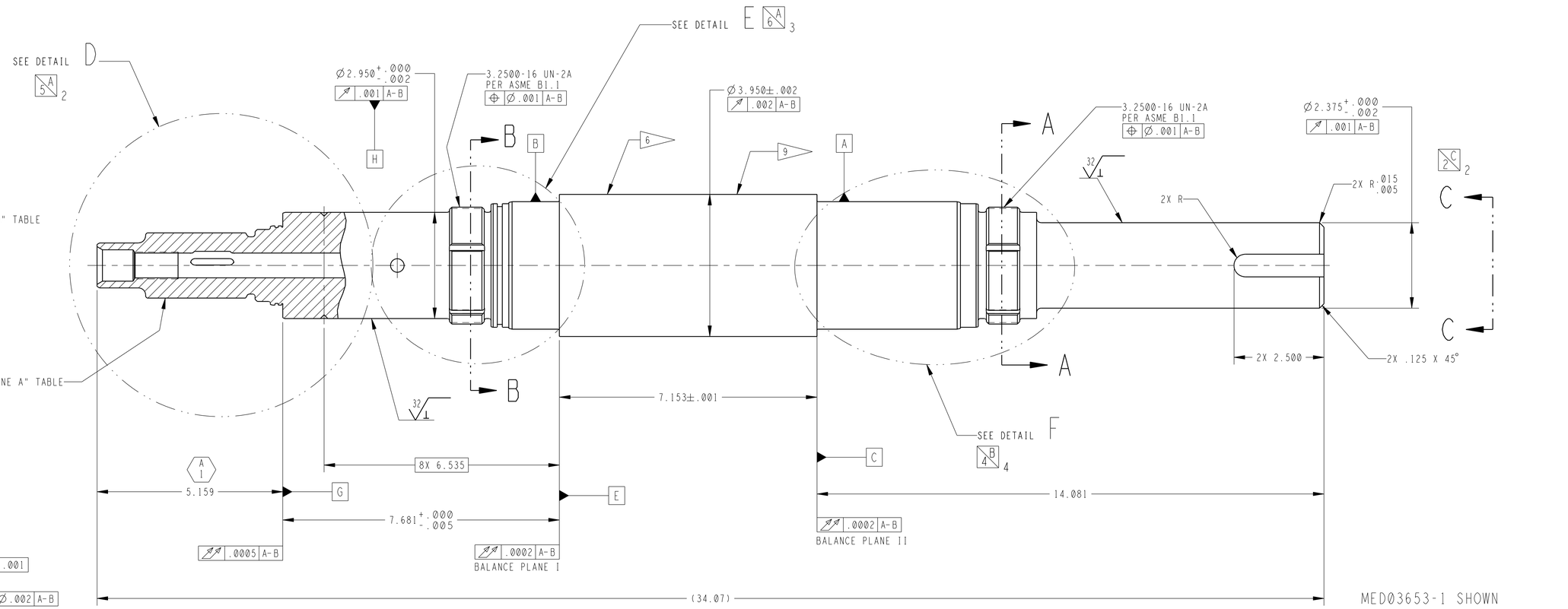

MED03653-1 SHOWN

SPLINE A	
EXTERNAL INVOLUTE SPLINE DATA PER ANSI B 92.1-1996 WITH EXCEPTIONS	
TYPE OF FIT	FILLET ROOT SIDE FIT
CLASS OF TOLERANCE	5
NUMBER OF TEETH	28
DIAMETRAL PITCH	16/32
PRESSURE ANGLE	30°
PITCH DIAMETER	1.7500 ⌭ .001
BASE DIAMETER	1.5155
MAJOR DIAMETER	1.812 MAX 1.807 MIN ⌖ Ø.002 A-B
MINOR DIAMETER	1.619 MAX 1.599 MIN ⌖ Ø.002 A-B
FORM DIAMETER	1.6835
FILLET RADIUS MIN	.016 MAX
ACTUAL CIRCULAR TOOTH THICKNESS	.0911 MIN
EFFECTIVE CIRCULAR TOOTH THICKNESS	.0940 MAX
MEASURING PIN DIAMETER	.1200
MEASUREMENT OVER PINS	1.9252 MIN, REF
TOTAL INDEX VARIATION	.0016 MAX
TOOTH-TO-TOOTH INDEX VARIATION	.0004
LEAD VARIATION	.0004
PROFILE VARIATION	+.0003/-.0005

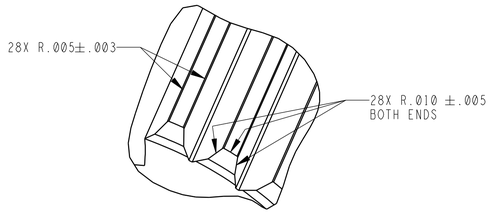

REFERENCE VIEW (TEETH)
SCALE 4/1

MED03652-1	J-2X OTP
NEXT ASSY	USED ON
APPLICATION (VERIFY IN RELEASE RECORDS)	
DRAWING STATE	Workgroup Approved
DRAWING VERSION	A.3
DRAWING NUMBER	MED03653
DRAWING INFORMATION	

UNLESS OTHERWISE SPECIFIED DIMENSIONS ARE IN INCHES
TOLERANCES
DECIMALS .XX±0.03 .XXX±0.010
ANGLES ±0.5°
MATERIAL 3
HEAT TREATMENT NONE
FINISH 5 A 1

MODEL STATE	Workgroup Approved
MODEL VERSION	A.1
MODEL NUMBER	MED03653-1
MODEL INFORMATION	

ORIGINAL DRAWING APPROVALS	
DESIGN ORG.	ER34
DRAWN BY	DWIGHT GOODMAN
ENGINEER	DWIGHT GOODMAN
CHECKER	Do Not Modify (Release data)
MATERIALS	Do Not Modify (Release data)
STRESS	
S & MA	Do Not Modify (Release data)
PRODUC-MANUF	
PRODUC-CONTR	Do Not Modify (Release data)
NEXT ASSEMBLY	Do Not Modify (Release data)
DESN BRANCH CHF	D WHITTEN
RELEASE DATE	2010/04/28

GEORGE C. MARSHALL SPACE FLIGHT CENTER
NATIONAL AERONAUTICS AND SPACE ADMINISTRATION
HUNTSVILLE, ALABAMA

SHAFT, DRIVE, HOLLOW

SIZE	CODE	DRAWING NUMBER	REV
D	339B2	MED03653	A

SCALE 5/8 MASS (UNIT WEIGHT) 65.726 SHEET 1 of 5

MSFC_DWG_D_FORMAT_REV(A) (AUGUST, 2009)

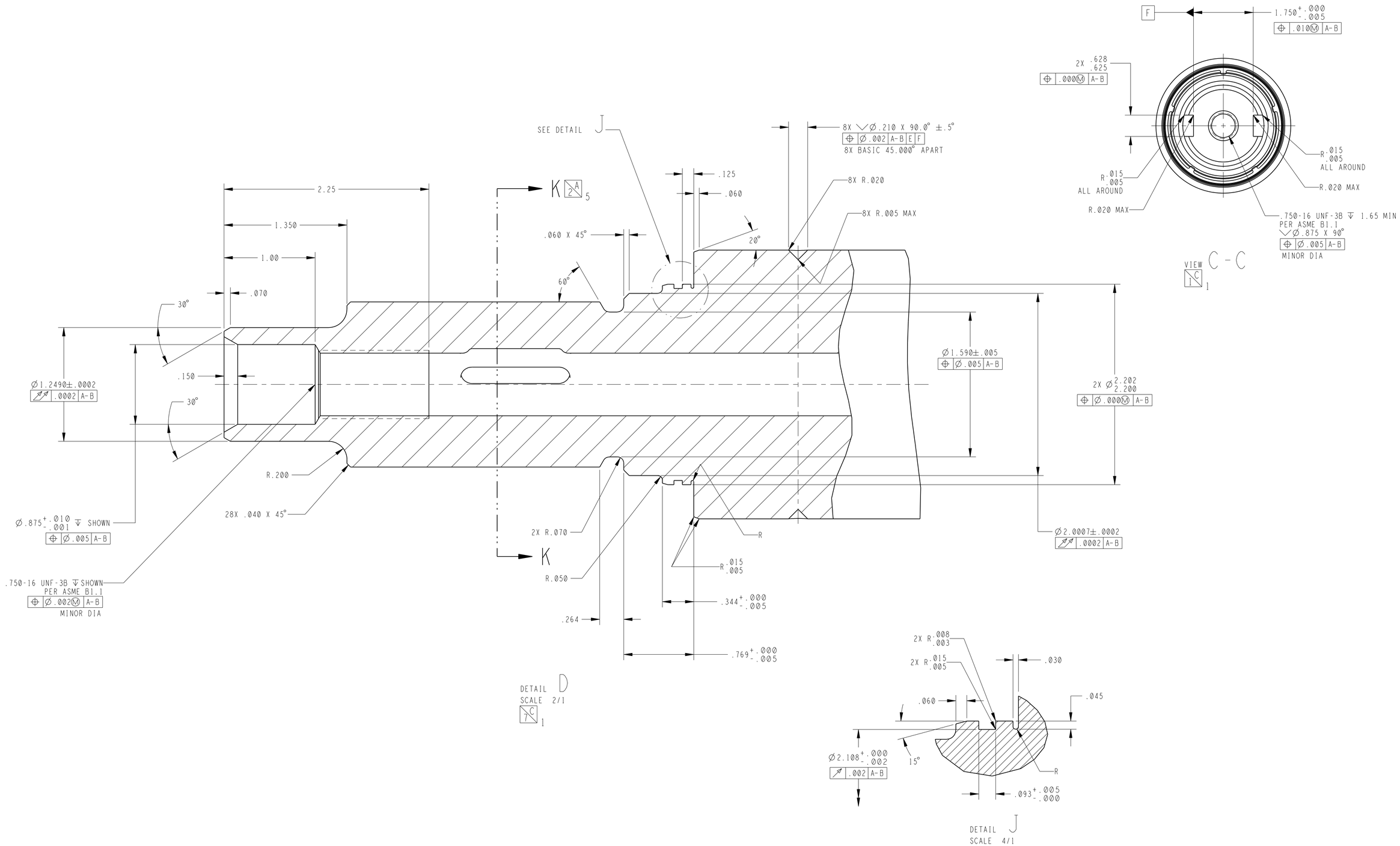

DRAWING STATE Workgroup Approved	SIZE	CODE	DRAWING NUMBER	REV
DRAWING VERSION A.3	D	339B2	MED03653	A
DRAWING INFORMATION			SHEET 2 OF 5	

MSFC_DWG_D_FORMAT_REV(A) (AUGUST, 2009)

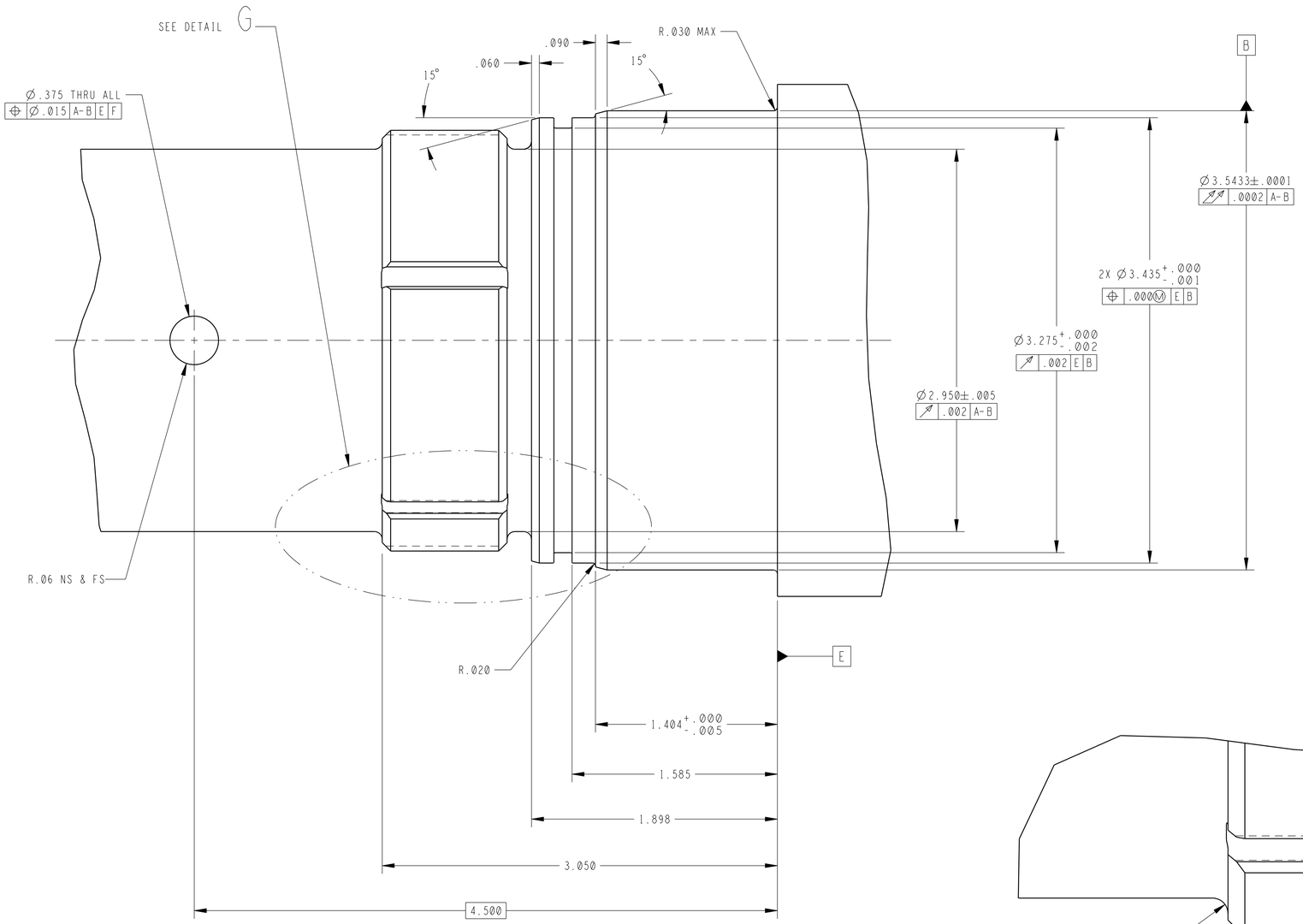

DETAIL E
SCALE 2/1
4 C 1

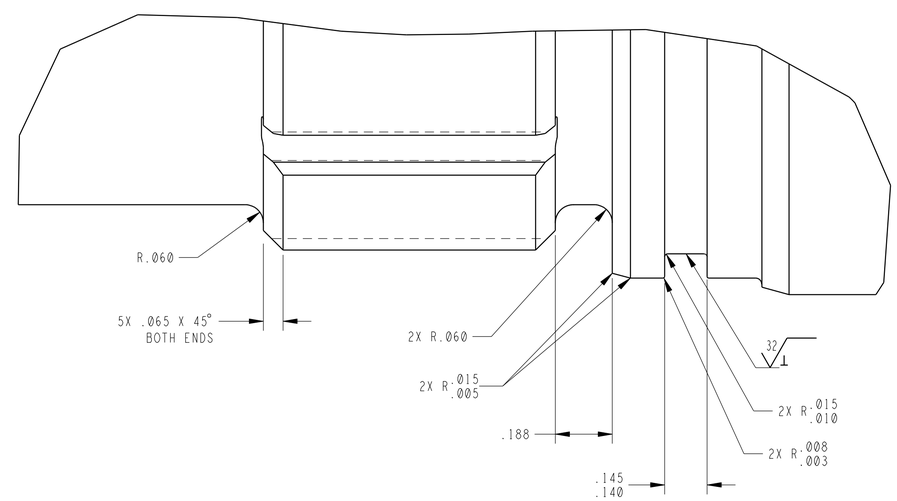

DETAIL G
SCALE 4/1

DRAWING STATE Workgroup Approved	SIZE	CODE	DRAWING NUMBER	REV
DRAWING VERSION A.3	D	339B2	MED03653	A
DRAWING INFORMATION			SHEET 3 OF 5	

MSFC_DWG_D_FORMAT_REV(A) (AUGUST, 2009)

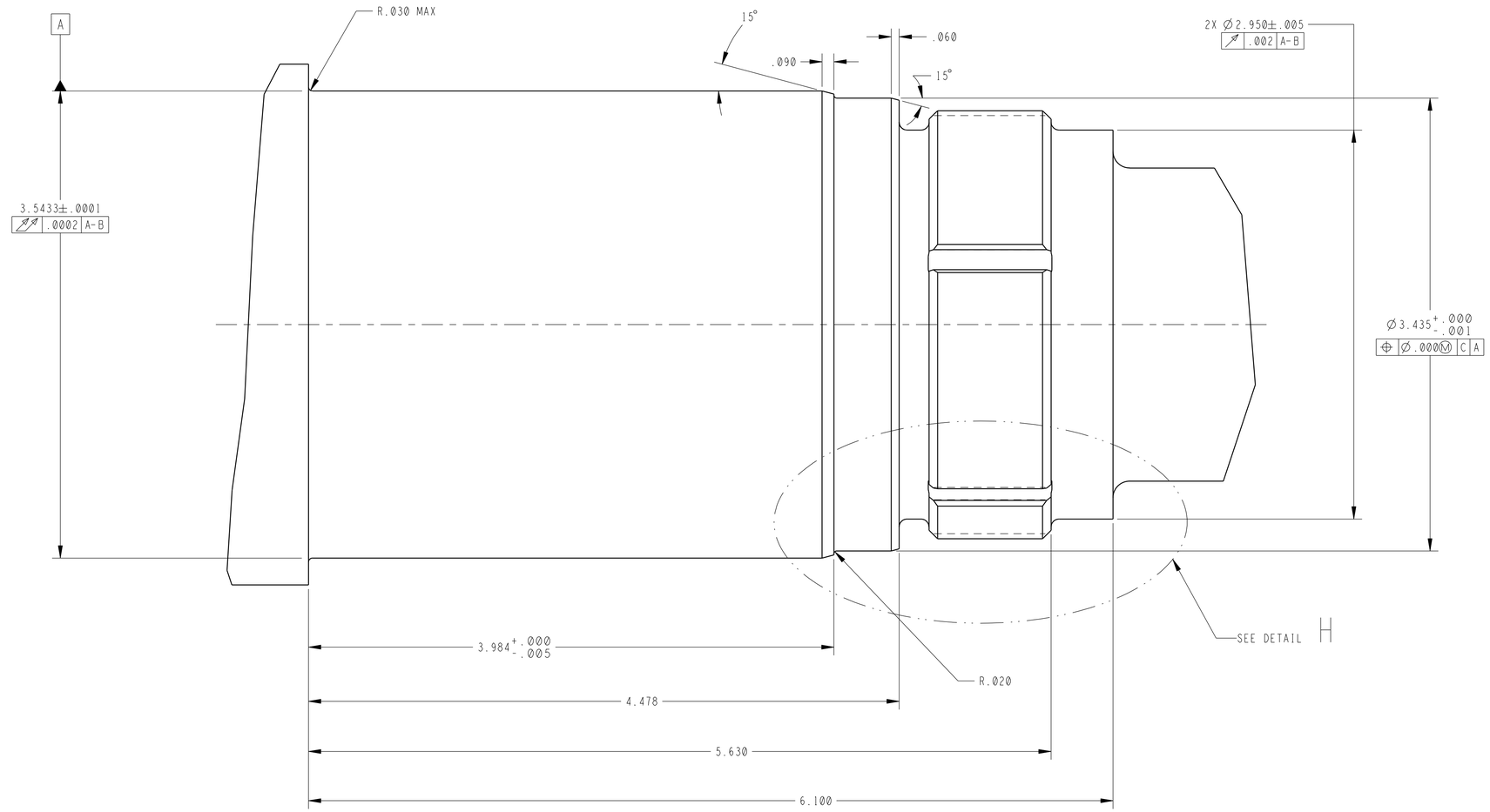

DETAIL F
SCALE 2/1
3 B 1

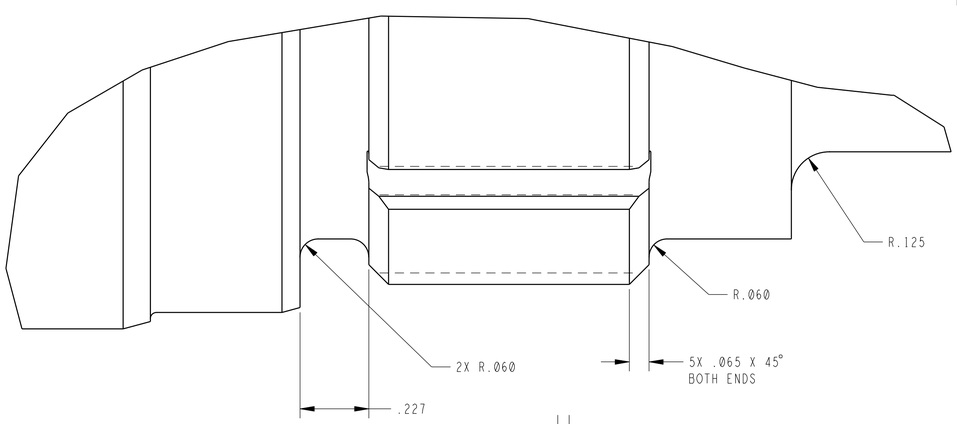

DETAIL H
SCALE 4/1

DRAWING STATE Workgroup Approved	SIZE	CODE	DRAWING NUMBER	REV
DRAWING VERSION A.3	D	339B2	MED03653	A
DRAWING INFORMATION			SHEET 4 OF 5	

MSFC_DWG_D_FORMAT_REV(A) (AUGUST, 2009)

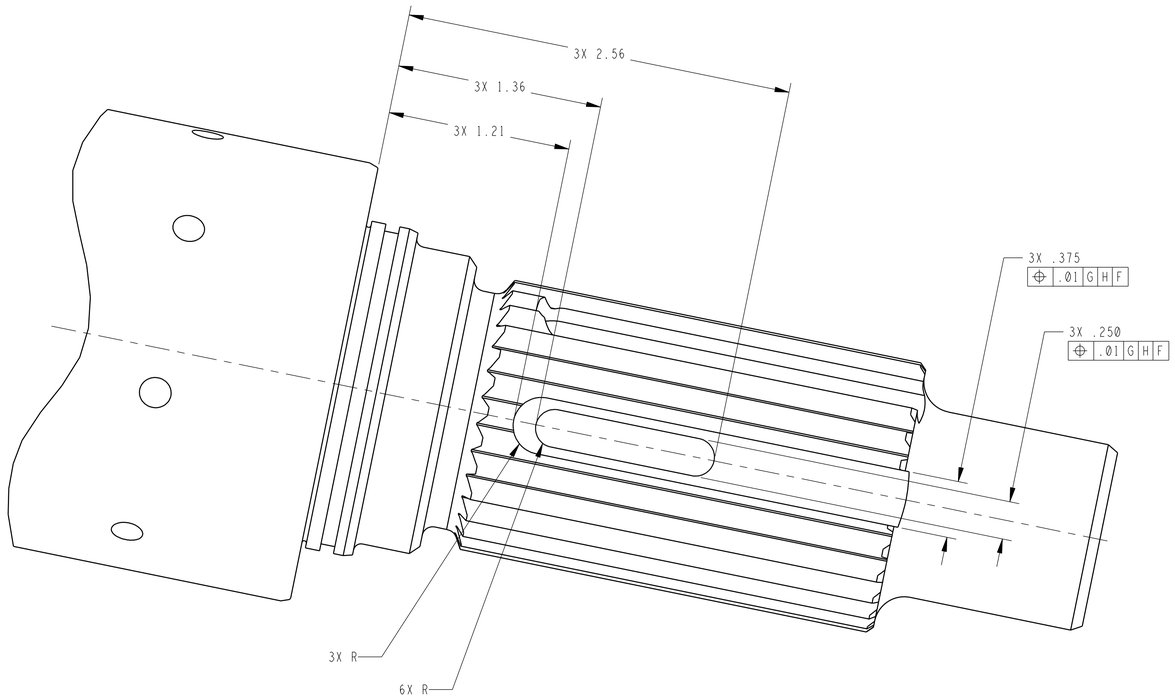

VIEW L - L

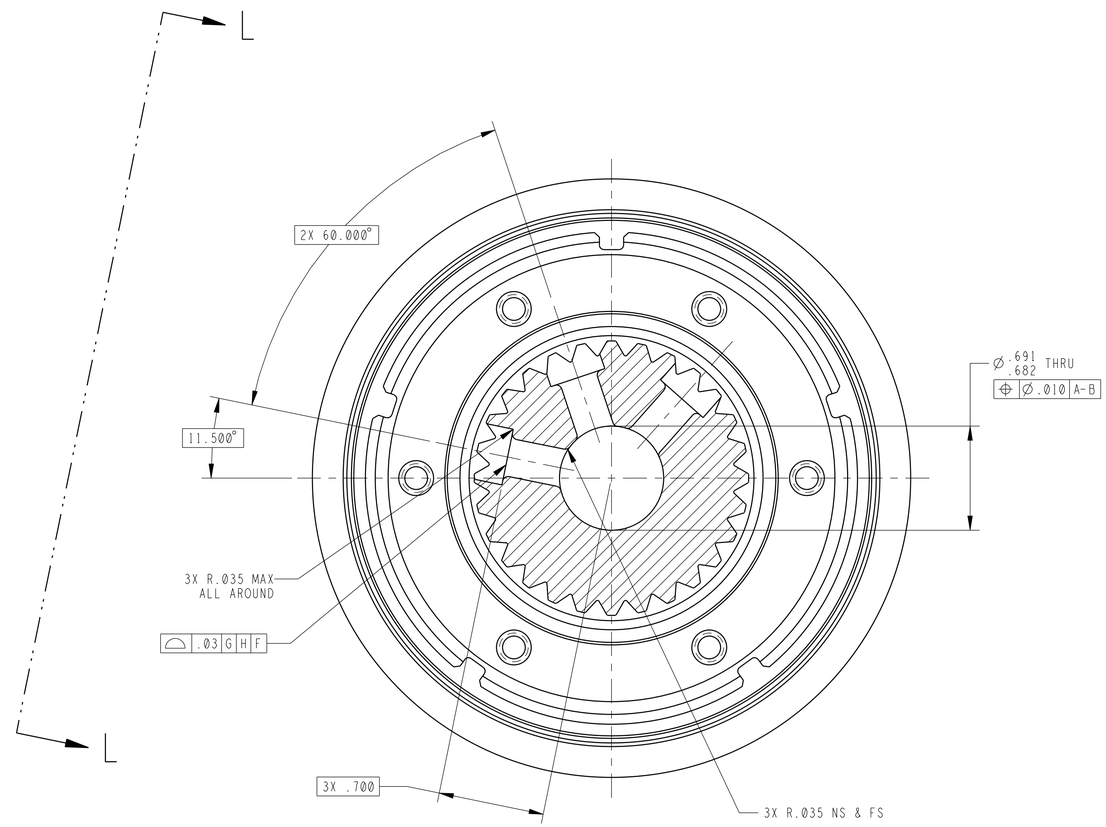

SECTION K - K
SCALE 2/1
5 C 2

DRAWING STATE Workgroup Approved	SIZE	CODE	DRAWING NUMBER	REV
DRAWING VERSION A.3	D	339B2	MED03653	A
DRAWING INFORMATION			SHEET 5 OF 5	

MSFC_DWG_D_FORMAT_REV(A) (AUGUST, 2009)