REVISION				
REV	ZONE	DESCRIPTION	DATE	APPROVAL
-	-	INITIAL RELEASE	6/10/13	G Casto
A	A4	A1 REMOVED ITAR STATEMENT	6/13/13	A. Schweiss

NOTES: UNLESS OTHERWISE SPECIFIED

1. MIRROR SHALL BE STRESS RELIEVED SUCH THAT IT WILL MEET ALL SPECIFICATIONS AND DIMENSIONS DESCRIBED HEREIN AFTER POST-DELIVERY EXPOSURE TO THE TEMPERATURE EXTREMES NOTED IN SECTION 2.1 OF THE OVIRS PRIMARY AND SECONDARY MIRRORS STATEMENT OF WORK (SOW).

2. ALL DIMENSIONS AND TOLERANCES APPLY AFTER ALL COATINGS HAVE BEEN APPLIED, UNLESS INDICATED.

3. THE MIRROR OPERATIONAL TEMPERATURE IS -113.15 DEGREES CELSIUS (160 KELVIN) ±2 DEGREES CELSIUS.

4. EXCEPT WHERE NOTED, THE STATED DRAWING DIMENSIONS AND TOLERANCES APPLY AT A TEMPERATURE OF 20 DEGREES CELSIUS ±2 DEGREES CELSIUS.

5. AT THE MIRROR OPERATIONAL TEMPERATURE, THE MIRROR DIMENSIONS SHALL BE WITHIN THE SPECIFIED TOLERANCES AFTER APPLYING A SCALE FACTOR OF 0.99686 TO THE MIRROR DIMENSIONS.

6. SURFACES INDICATED SHALL HAVE A LOW REFLECTIVITY COATING IN THE 0.4-4.3 MICROMETER WAVELENGTH RANGE.

7. OVER THE 37mm DIAMETER PHYSICAL APERTURE THE MIRROR SHALL HAVE A PROTECTED SILVER COATING THAT HAS A MINIMUM REFLECTIVITY OF 95% IN THE 0.4-4.3 MICROMETER WAVELENGTH RANGE.

8. THE MIRROR SURFACE SHALL HAVE A CONCAVE, OFF AXIS PARABOLOID SURFACE OF REVOLUTION BOUNDED BY THE 37mm DIAMETER PHYSICAL APERTURE DEFINED BY THE FOLLOWING EQUATION AND PARAMETERS.

$$z = \frac{c r^2}{1 + \sqrt{1 - (1+k) c^2 r^2}}$$

WHERE z IS THE SURFACE Z-COORDINATE (OR SAG) FROM THE PARENT SURFACE VERTEX PLANE, c IS THE CURVATURE (THE RECIPROCAL OF THE RADIUS OF CURVATURE), r IS THE RADIAL COORDINATE IN LENS UNITS AND k IS THE CONIC CONSTANT.

PARAMETER	SYMBOL	VALUE	TOLERANCE
CURVATURE	c	1/140MM (CONCAVE)	----------
RADIUS OF CURVATURE	$1/c$	140MM (CONCAVE)	±0.14MM
CONIC CONSTANT	k	-1	±0.005

9. THE MIRROR'S 36mm CLEAR APERTURE and 37MM DIAMETER PHYSICAL APERTURE WILL BE CENTERED 25 MM FROM THE MIRROR ROTATIONAL AXIS OF SYMMETRY AS SHOWN.

10. THE SURFACE IRREGULARITY OVER THE 36mm DIAMETER CLEAR APERTURE SHALL NOT EXCEED 95 NANOMETERS RMS AND 160 NANOMETERS PEAK-TO-VALLEY AT THE MIRROR OPERATIONAL TEMPERATURE. THIS SHALL BE VERIFIED BY TEST AT THE MIRROR OPERATIONAL TEMPERTURE WHILE MOUNTED ON THE 3 MOUNTING TABS.

11. THE SURFACE ROUGHNESS OVER THE 37mm DIAMETER PHYSICAL APERTURE SHALL NOT EXCEED 3 NANOMETERS RMS AT THE MIRROR OPERATIONAL TEMPERATURE. THIS SHALL BE VERIFIED AT ROOM TEMPERATURE BY TEST AT THE 5 APPROXIMATE LOCATIONS INDICATED.

12. 40-20 SCRATCH AND DIG OVER THE 37mm DIAMETER PHYSICAL APERTURE, VERIFIED BY DIRECT COMPARISON WITH TRACEABLE STANDARD PER MIL-O-13830.

13. UPON DELIVERY THE MIRROR SHALL MEET A CONTAMINATION CLEANLINESS LEVEL OF 300 OR BETTER PER IEST-STD-CC1246D.

14. THE MIRROR ALIGNMENT FIDUCIALS' CALIBRATION UNCERTAINTY WITH RESPECT TO THE MIRROR SURFACE OPTICAL PRESCRIPTION SHALL NOT EXCEED 0.050 MM IN POSITION AND 30 ARC-SECONDS IN CLOCKING AND TIP/TILT. THE CALIBRATION OF THE FIDUCIALS WITH RESPECT TO THE PRESCRIPTION SHALL BE DONE VIA TEST AT ROOM TEMPERTURE.

15. CLOCKING ALIGNMENT FLAT SURFACE ERROR DATA
    - -POLISH IN APPROXIMATE AREA SPECIFIED
    - -SPECIFICATIONS APPLY AT 293°±5°K
    - -OPTICAL SURFACE PERSCRIPTION : FLAT
    - -OPTICAL SURFACE QUALITY : 40-20 SCRATCH AND DIG, VARIFIED BY DIRECT COMPARISON WITH TRACEABLE STANDARD PER MIL-O-13830.
    - -FIGURE ERROR : < 63.3 nm RMS OVER THE FULL CLEAR APERTURE
    - -MICROROUGHNESS : 10 nm RMS OVER THE FULL CLEAR APERTURE
    - -OPTICAL FIGURING OF THIS SURFACE SHALL NOT ERASE THE FOCUS FIDUCIAL.

16. MIRROR SUBSTRATE REAR SURFACE ERROR DATA :
    - -SPECIFICATIONS APPLY AFTER 293°K±5°K
    - -OPTICAL SURFACE PRESCRIPTION : FLAT
    - -OPTICAL SURFACE QUALITY : 60-40 SCRATCH AND DIG, VARIFIED BY DIRECT COMPARISON WITH TRACEABLE STANDARD PER MIL-O-13830.
    - -FIGURE ERROR : < 63.3 nm RMS OVER THE FULL CLEAR APERTURE, EXCLUDING MOUNTING TABS.
    - -MICROROUGHNESS : 10 nm RMS OVER THE FULL CLEAR APERTURE, BEST EFFORT IN VICINITY OF MOUNTING TABS

17. THE MIRROR VENDOR SHALL DETERMINE THE PREFERRED ORIENTATION OF THE ALUMINUM GRAIN DIRECTION IN ORDER TO MEET THE MIRROR SPECIFICATIONS.

18. ANY PERIODIC TOOLING MARKS REMAINING WITHIN THE 37mm DIAMETER PHYSICAL APERTURE SHALL NOT CAUSE DIFFRACTION OF LIGHT IN THE 0.4-4.3 MICROMETER WAVELENGTH RANGE

19. ALL PRIMARY DIMENSIONS ARE IN MILLIMETERS AND SECONDARY DIMENSIONS ARE IN INCHES.

20. BAG PART IAW MIL-STD-130, PARAGRAPH 4, WITH PART NUMBER AND SERIAL NUMBER.

SECONDARY MIRROR SAG TABLE (FOR REFERENCE ONLY)			
SAG POINT DESCRIPTION	Z(mm)	X(mm)	Y(mm)
PARENT PARABOLIC VERTEX	0.00000	0.0	0.0
MIRROR CLEAR APERTURE CENTER	-2.23214	0.0	25.0
CLEAR APERTURE EDGE	-6.60375	0.0	43.0
CLEAR APERTURE EDGE	-0.17500	0.0	7.0
CLEAR APERTURE EDGE	-3.38929	-18.0	25.0
CLEAR APERTURE EDGE	-3.38929	18.0	25.0
PHYSICAL APERTURE EDGE	-6.75804	0.0	43.5
PHYSICAL APERTURE EDGE	-0.15089	0.0	6.5
PHYSICAL APERTURE EDGE	-3.45446	-18.5	25.0
PHYSICAL APERTURE EDGE	-3.45446	18.5	25.0

Released
MASTER DRAWING
REVISION BY
EO ONLY
GSFC FILE COPY
13-Jun-13
CM Officer

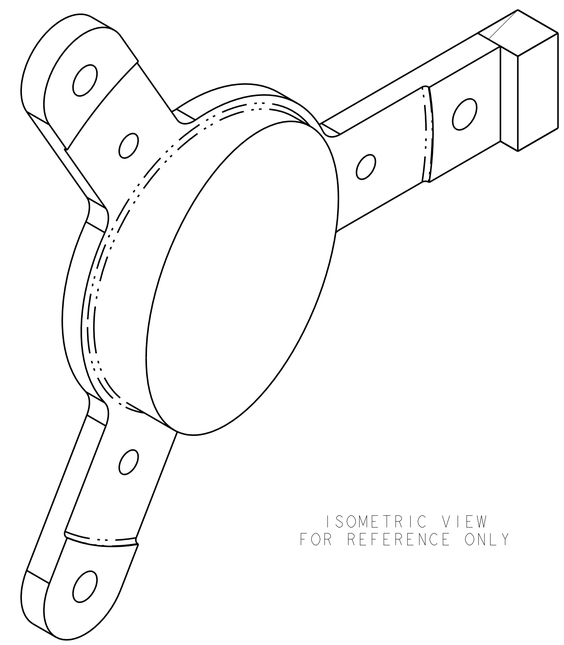

ISOMETRIC VIEW
FOR REFERENCE ONLY

ITEM NO.	REQD	REQD	PART NO.	DESCRIPTION	MATERIAL	MAT'L SPEC OR CAGE CODE
		AR	———	SECONDARY, MIRROR	AL. ALY. 6061-T6	AMS 4027

LIST OF MATERIAL

THIRD ANGLE PROJECTION

HARDWARE CLASSIFICATION: A

INCH | HYBRID METRIC/INCH | METRIC

INCH DRAWING DIMENSIONS ARE IN INCHES, UNLESS OTHERWISE SPECIFIED
REMOVE ALL BURRS AND SHARP EDGES R.010 OR CHAMFER MAX.
TOLERANCES FOR INCH: .XX ±.02, .XXX ±.005, ∠ ±.5°, X/X ± 1/16, FINISH IN µIN 125

METRIC DRAWING DIMENSIONS ARE IN MM, UNLESS OTHERWISE SPECIFIED
REMOVE ALL BURRS AND SHARP EDGES R0.25 OR CHAMFER MAX.
TOLERANCES FOR METRIC: X.X ±0.1, X ±0.2, XX ±0.3, ∠ ±0.5°, XXX ±0.8, XXXX ±1.5, FINISH IN µM 3.2

SOFTWARE: Pro/ENGINEER WF5
FILE LOCATION: OVIRS/OPTICS
DRAWING FILE: 2187751 REV A.2
MODEL FILE: 2187751 REV A.0

NEXT ASSY	USED ON
-	-
2187700	OVIRS/OPTICS

NATIONAL AERONAUTICS AND SPACE ADMINISTRATION — Goddard Space Flight Center — GREENBELT, MD [X] WALLOPS ISLAND, VA [ ]

DRAWING INTERPRETED PER 500-PG-8700.2.5

	NAME	INIT.	DATE
DESIGNED	B. BOS	BB	6/13/13
DRAWN	Q.PRATHER	QP	6/13/13
CHECKED	G. CASTO	GC	6/13/13
APPROVED - STRESS	E. MATSON	EM	
APPROVED - -	-		
APPROVED - MECHANICAL	A. SCHWEISS	AS	6/13/13
APPROVED - PDL	G. CASTO	GC	6/13/13

TITLE: SECONDARY, MIRROR, OVIRS

SIZE: D | CAGE CODE: 36FC1 | DWG NO. 2187751 | REV A

SCALE: 2/1 | SHEET: 1 OF 2

GSFC 4-48 (8/07)

A1

FOLD LINE

DWG NO. 2187751 REVISION A

REVISION				
REV	ZONE	DESCRIPTION	DATE	APPROVAL
-	-	SEE SHEET 1 FOR REVISIONS	-	-

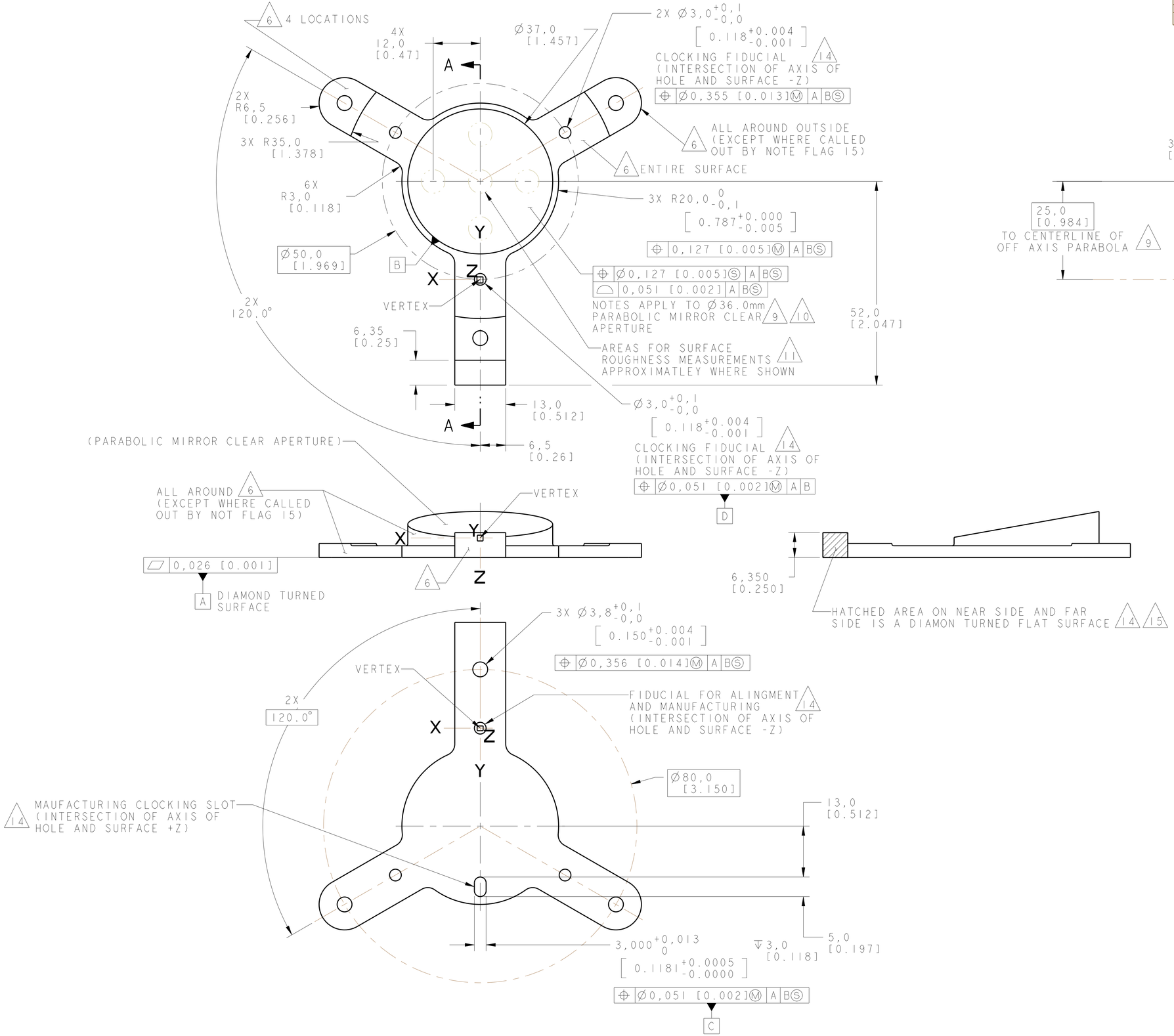

TITLE			
SECONDARY, MIRROR, OVIRS			
SIZE D	CAGE CODE 36FC1	DWG NO. 2187751	REV A
SCALE: 2/1		SHEET: 2 OF 2	

FOLD LINE

2187751 A

GSFC 4-48 (8/07)