Uniform Light Source System for Collimator Requirements Document

1. Overview.

The SAGE III ISS Project at NASA Langley Research Center requires a new uniform light source system to feed its collimated source bench (CSB). The new light source system must uniformly illuminate the government's circular field stop (of diameter 0.242 inches). The radiometrically-stabilized source will have two modes (Solar Mode and Lunar Mode) to select between an approximate 1% solar irradiance spectrum and an approximate lunar irradiance spectrum (0.01% solar irradiance spectrum), as measured at the output of the government's collimator. Solar and Lunar Mode selection should be electrical. The color temperature of a tungsten halogen bulb (>3000 K) is sufficient for both required spectra, and the approximate "1% solar irradiance spectrum" and "0.01% solar irradiance spectrum" refer to total irradiance. High-quality radiometric power supplies will ensure stability of the light source. The center of the circular field stop is located at the focus of the CSB off-axis parabolic mirror and 5.25 inches above the surface of the optical table. The field stop is sized to approximate the 32 arcmin angular diameters of the Sun and Moon (as seen from Earth) at the CSB output. The government's CSB off-axis parabolic mirror is a Space Optics Research Lab (SORL) mirror part number OPA-25-055-04Q with effective focal length of 25.99 inches. This light source system will be mounted into an existing space on a standard ¼-20, 1-inch grid optical bench and will be maintained within a Class 10,000 clean room (ISO 7 per ISO 14644).

The control of stray light is a concern to the project. The government anticipates the vendor may house the light source below an actively vented cover box for stray light control and, for this reason, the government perceives neutral density (ND) filters as an undesirable component in the optical path between the field stop and integrating sphere. Reflections from such an optical surface in the presence of stray light within the cover box would be expected to degrade the uniformity of the simulated lunar or solar disk as seen at the collimated output of the CSB. Because uniformity is the preeminent requirement, the government's concept employs no optical elements between its field stop and the Lambertian surface inside of an integrating sphere.

Appendix A describes the government's concept for utilizing two integrating spheres to provide a simulated 1% solar and lunar light source. The vendor's proposed design is not limited to two separate integrating spheres if there is an equivalent or better design solution. Alternative designs must be of sufficient detail to permit the government to ensure that the solution will meet light source and installation requirements.

Note: Government optical models of the collimator system are available upon request.

2. Light Source System Requirements.

a. The system's materials shall be compatible with Class 10,000 clean room (ISO 7 per ISO 14644) environments.

b. System material selection shall be approved by the government prior to construction/purchase.

c. The system shall produce two different, selectable radiant outputs (respectively called the "solar source" and the "lunar source").

d. The system light source output shall be oriented and positioned so that it illuminates the government's field stop (as illustrated in attachment 1).

e. The system's solar source shall be between 12.0 and 13.6 Watts per square meter at the output of the government's collimator (given the use of the government hardware as illustrated in attachment 1). This requirement may be verified via vendor analysis.

f. The system's lunar source shall be between 0.12 to 0.136 Watts per square meter at the output of the government's collimator (given the use of the government hardware as illustrated in attachment 1). This requirement may be verified via vendor analysis.

g. The system's irradiance uniformity at the government's field stop shall exceed 97%. Uniformity is defined as the ratio of the irradiance at any off-axis edge of the government's field stop to the axial irradiance at the center of the government's field stop. This requirement may be verified via vendor analysis.

h. The system shall produce a color temperature spectrum of a tungsten halogen bulb (>3000 K) for both the solar and lunar source. (Note: the spectrum is representative of a tungsten bulb meeting the EZD/6.6A/125W/G5.3 ANSI 125 specification)

i. The system's light bulbs will be available "off-the-shelf" from more than one vendor.

j. The system will include ten replacement light bulbs for any individual light source required.

k. The system's light source power supplies shall have continuous digital display of bulb voltage and current.

l. The system shall interface with a standard ¼-20, 1-inch grid optical bench.

m. The system shall include all hardware required to mount the system to the optical bench.

n. The system shall be no more than 18 inches by 7 1/8 inches by 24 inches high, excluding the light baffle, as illustrated in attachment 1.

o. System shall operate within specifications for 8 continuous hours of operations in ambient (15-30 deg C) room conditions.

p. The system shall integrate a NIST-traceable UV silicon photodiode detector that measures radiance from 200nm to 1100nm to track bulb stability. This detector can, for example, measure radiance inside of an integrating sphere feeding the field stop.

q. The system's silicon detector shall provide a data readout and be digitally storable

r. The system shall control stray light, or a suitable stray light hood shall be provided.

s. Stray light hood, if provided, shall be removable without disturbing optical alignment of the optical system to facilitate lamp replacement or perform other adjustments.

t. Stray light hood, if provided, shall be vented and fan cooled, if required to meet requirement 2.o.

u. Cooling vents, if necessary, shall not interfere with the optical axis of the system.

v. Fan(s), if provided, shall be compatible with Class 10,000 clean room (ISO 7 per ISO 14644) environments.

w. The system design shall be able to be modified to permit the vendor to work with the government to finalize design prior to manufacture.

x. The system design shall demonstrate ease of operation and maintenance (for example; ease of bulb replacement, lifetime of the bulb, ease of installation, and ease of selection between solar and lunar mode)

y. The system shall be delivered no later than 3 September 2013.

3. Deliverables.

a. Hardware. All hardware required to meet above requirements.

b. Documentation:
- NIST-traceable calibration certificate for photo diode
- Calibration certificate for power supplies
- Drawings
- Materials List
- Users Manuals for purchased components
- Optical analysis results
- Test results for 8 hour continuous operation (including photo diode output measurements)

APPENDIX A.

1. Dual integrating sphere concept. The following paragraphs pertain to the government's concept of utilizing two integrating spheres to provide a solar and lunar light source. The vendor's proposed design providing a lunar and solar signal is not limited to two separate integrating spheres if there is an equivalent or better design solution. Alternative designs must be of sufficient detail to permit the government to ensure that the solution will meet light source and integration requirements.

2. Dual Integrating Sphere:

a. The dual integrating sphere system consists of: two integrating spheres (designated as "Solar" and "Lunar"), a vented stray light hood (not shown), mounting hardware, commercial off-the-shelf lamps, and programmable power supplies.

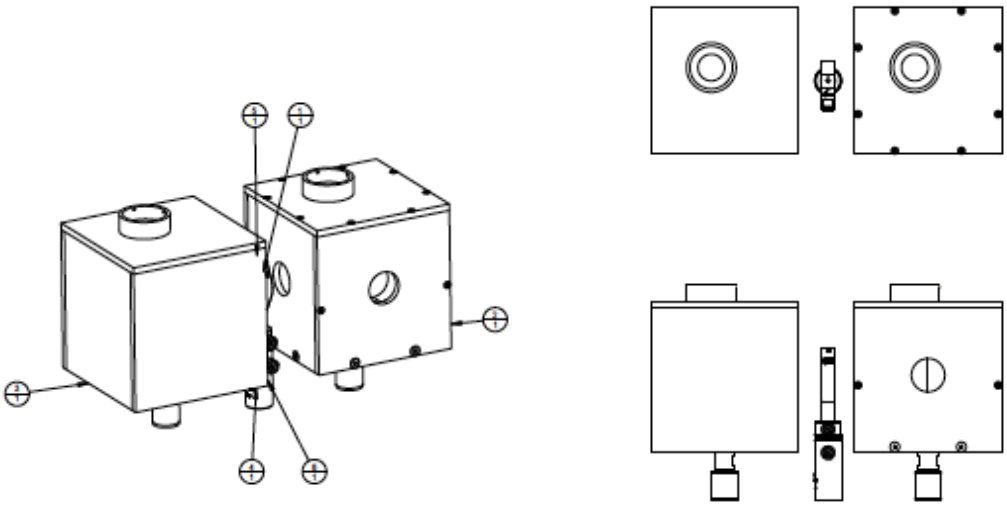

b. The Light source ports are compatible with standard commercially available ports

c. With the goal of achieving a uniform collimated source system at both lunar and solar intensities, the government's concept integrates the diffuse inner surface of an integrating sphere within the field of view of the collimator. The integrating sphere is placed coaxial to the field stop at an appropriate distance.

3. Solar Sphere.

a. The solar sphere is approximately 4 inches in diameter (internal measurement).

b. The exit port for the solar sphere is approximately 1.25" diameter.

c. The lamp port for the solar sphere uses an internal tungsten halogen bulb equivalent to EZD/6.6A/125W/G5.3 ANSI 125.

d. The solar sphere employs a NIST-traceable, UV silicon photodiode detector for radiance measurements from 200nm to 1100nm.

e. The solar sphere has an additional entrance port for light input from the lunar sphere.

4. Lunar Sphere.

a. The lunar sphere is approximately 4 inches in diameter (internal measurement).

b. The lunar sphere has an exit port that aligns with the lunar entrance port of the solar sphere.

c. The lamp port for the lunar sphere uses an internal tungsten halogen bulb equivalent to EZD/6.6A/125W/G5.3 ANSI 125.

d. The lunar sphere will have a total radiant output energy equal to 1% of the solar sphere operational output.

   Note 1: During lunar mode, the solar sphere lamp will not be active, and the output of the exit port of the solar sphere will be 1% of the radiance of the active solar sphere.
   Note 2: A variable area aperture or ND filter is conceptually planned between the lunar and solar spheres.

5. Power Supplies.

a. The system has a variable-power power supply to independently power the lunar and solar sphere lamps

b. The power supply output is continuous and digitally storable.

CAGE	DWG. NO.	SH	REV.
25305	TBD	1	-

REVISION HISTORY

ZONE	REV	DESCRIPTION	APPROVED	BRANCH	DATE

NOTES:

1. APPLICABLE STANDARDS/SPECIFICATIONS:
   ASME Y14.100, ENGINEERING DRAWING PRACTICES,
   MIL-STD-31000, TECHNICAL DATA PACKAGES.
2. BREAK ALL SHARP EDGES, REMOVE ALL BURRS, CLEAN PER ASTM A380
3. SURFACE ROUGHNESS SHALL BE 125 µin RMS OR BETTER.
4. UNLESS OTHERWISE SPECIFIED, TORQUE THREADED
   FASTENERS AS FOLLOWS:
   .250-20 | 8-10 (FT-LB)
5. CLEAN AND MAINTAIN TO VISIBLY CLEAN - HIGHLY SENSITIVE PER JSC-SN-C-0005D PRIOR TO ASSEMBLY

PRELIMINARY
NOT FOR FLIGHT
2013-05-09

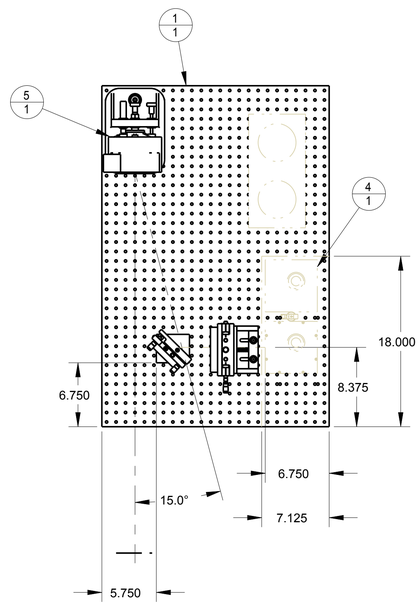

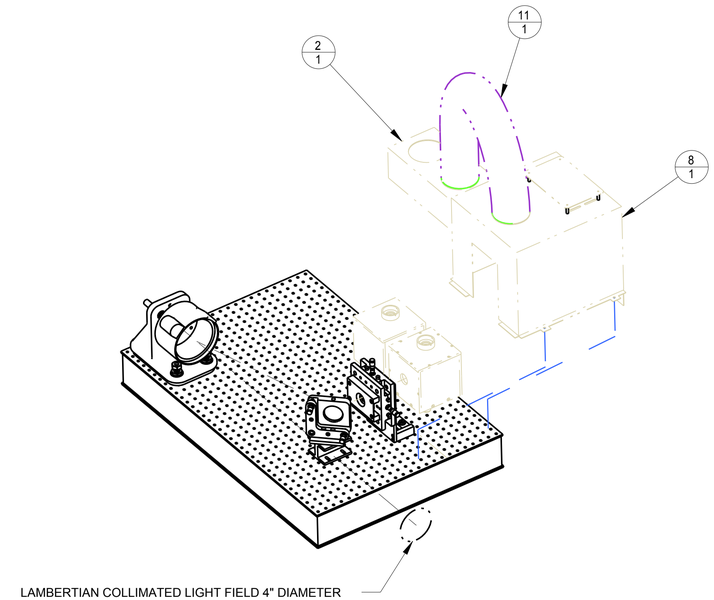

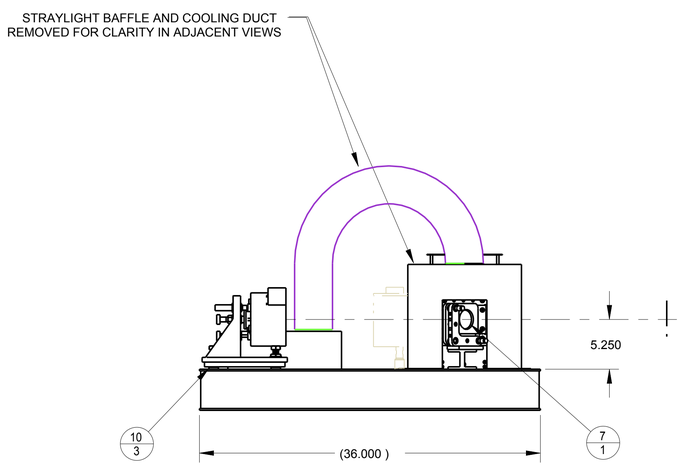

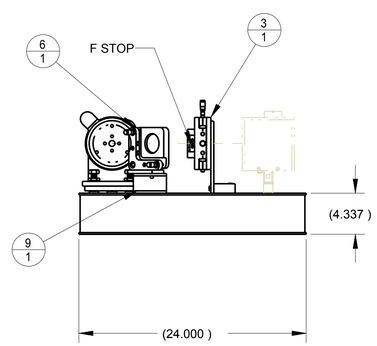

QTY REQD	CAGE CODE	PART OR IDENTIFYING NO.	NOMENCLATURE OR DESCRIPTION	MATERIAL SPECIFICATION	ITEM NO.
1		6	COOLING DUCT	ALUMINUM	11
3		1278360	SPACER_CSB	AL 6061	10
1		1278068	MIRRORSTAND_CSB	AL 6061	9
1		540344	STRAYLIGHT	AL	8
1	0LW43	PF20-03-F01	UV ENHANCED ALUMINUM MIRROR		7
1	20151	600A-2R	KINEMATIC OPTICAL MOUNT 2" DIAMETER		6
1		25-055-04	OFF-AXIS MIRROR		5
1		1	INTEGRATING SPHERES		4
1		1278357	FOCUS MECHANISM		3
1		5	COOLING FAN		2
1	20151	04SI71972	2' X 3' PG OPTICAL BREADBOARD		1

PARTS LIST

PART DASH NO.	QTY REQD PER ASSY	NEXT	FINAL	NEXT ASSY	USED ON
-1	1	1	FINAL	SAGE III	

APPLICATION

UNLESS OTHERWISE SPECIFIED DIMENSIONS ARE IN INCHES.
TOLERANCES
DECIMALS .XX ± .03 .X ± .XXX± .010 ANGULAR .5°
DO NOT SCALE DRAWING

TREATMENT

FINISH

SIMILAR TO

SPECIAL MARKING SYM

CONTRACT NO.

APPROVALS	DATE
DRAWN JOHN M WELLS LA1982UB	2013-05-09
CHECKED	
DESIGNER JOHN M WELLS LA1982UB	
LEAD ENGR	
BRANCH	

NATIONAL AERONAUTICS & SPACE ADMINISTRATION
LANGLEY RESEARCH CENTER
HAMPTON, VA 23681-2199

TITLE
CSB_LAYOUT
CSB
SAGE III - ISS

SIZE	CAGE CODE	DWG. NO.	REV.
D	25305	TBD	-

SCALE 1/8 CALC. WT. ACT. WT. SHEET 1 OF 1

Proposal Guidance:

The following guidance on proposal expectations to bidders:

1. A short narrative (two (2) pages or less) which describes the vendor's approach and how it will maximize use of COTS hardware
2. Illustrations or drawings which depict the vendor's concept
3. Preliminary optical analysis which demonstrates that the vendor's design will meet optical performance requirements
4. Proposed materials list to verify compatibility with Class 10,000 clean room
5. Proposed list of hardware items and vendors planned for use in the light source system