A1 TEST STAND LOX RUN LINE FLOW METER SPECIFICATION

LARGE ROCKET ENGINE TESTING COMPLEX

STENNIS SPACE CENTER

April 2, 2013

Prepared by Paul Rieder

National Aeronautics and Space Administration
John C. Stennis Space Center
Stennis Space Center, MS 39529-6000

1.0 SCOPE

This specification contains the requirements for turbine flowmeters used to measure liquid oxygen (LOX) flow rates for RS-25 rocket engine testing at Stennis Space Center. This basic specification describes units which will be mounted in moderate-pressure piping. Requirements herein shall govern design, material, fabrication, assembly, inspection, examination, testing, cleaning, packaging and delivery of the specified components. The government reserves the right to inspect any aspect of the fabrication, testing, cleaning, etc. of this component following a 14 day notice. There shall be no exceptions to any requirements of this engineering standard unless specifically defined in the proposal and accepted in the contract.

1.1 APPLICABLE DOCUMENTS

Turbine flowmeter requirements shall comply with the latest edition of the following referenced publications unless shown or specified otherwise:

NASA/SSC Standards and Specification Control Drawings
Stennis Space Center
SSC, Mississippi 39529-6000

NASA/SSC Standard RPTSTD-8070-0001, Surface Cleanliness Standard of Fluid Systems for Rocket Engine Test Facilities of the NASA Rocket Propulsion Test Program

NASA/SSC Standard STD-6001B, Flammability, Offgassing, and Compatibility Requirements and Test Procedures

NASA/SSC Standard 79-010, SSC Requirements for Materials Used in LOX/GOX Service

NASA/SSC Drawing 54000-GM30, Specification for Materials used in LOX and GOX Service Exempt from Batch Test Requirements

NASA/SSC Drawing 54000-GP11, Packaging and Preservation of Cleaned Components

American Society of Mechanical Engineers (ASME)
United Engineering Center
New York, New York 10017
(212) 705-7722

ASME A182	Specification for Forged or rolled Alloy-Steel Pipe Flanges, Forged Fittings, and Valves and Parts for High-Temperature Service
ASME A312	Specification for Seamless and Welded Austenitic Stainless Steel Pipe
ASME B31.3	Process Piping

ASME Boiler and Pressure Vessel Code

ASTM G86, Standard Test Method for Determining Ignition Sensitivity of Materials to Mechanical Impact in Pressurized Oxygen Environments

National Institute of Standards and Technology
100 Bureau Drive, Stop 1070
Gaithersburg, MD 20899-1070
(301) 975-6478

International Standard ISO 1940

1.2 SUBMITTALS

The following shall be submitted in sufficient detail to show full compliance with the specification. All submittals shall show the contract number prominently. Electronic files shall be readable with Adobe Acrobat ® or other software pre-approved by the Customer. All submittals, hard copies and electronic copies, shall be submitted to the Contracting Officer (CO) and the CO's designee by the times shown.

SD-01 Data

The Contractor shall furnish design calculations covering all parts of the meter. Design calculations for the meter shall be submitted with the shop drawings. Six copies and one electronic copy are due six weeks after award of the contract. Design calculations shall be stamped by a Professional Engineer and shall include:

Estimated meter weight
Fatigue Analysis on all moving parts
Analysis or experience with similar designs to verify that electrical discharge from the rotor that could have detrimental effects on any flowmeter hardware or pose an ignition hazard in LOX will not occur.
Analysis or experience with similar designs verifying that the flowmeter design will meet the requirements contained in Sections 3.1 and 3.3.
Analysis specified in Paragraph 3.2.7.

SD-04 Drawings

Shop Fabrication Drawings shall be submitted of each meter and of each shop assembly component as needed for the assembly of the meter. Six copies and 1 electronic copy are due six weeks after award of the contract. Shop drawings shall show the location and details of:

All dimensions and details of construction
Lifting points
Center of gravity (of complete assembly)

Requirements and design of support structures (if any)
Critical clearance ("stackup") analysis
Bill of Materials

SD-07 Schedules

Six copies and one electronic copy of fabrication time and test and inspection and cleaning schedules shall be submitted within three weeks after award of contract.

SD-08 Statements

Six copies and one electronic copy of the following items within three weeks after award of contract:

Quality Control Manual
NDT Procedures and Inspection Procedures
Welding procedures and welder qualification records
Hydrostatic Leak Check Procedures
Cleaning and Certification Procedures
Painting Specifications and Procedures (as applicable)
Functional Test Procedures
Plan for satisfying dynamic balance requirements
Acceptance test plan, including details on approach to proving non-linearity and repeatability, Paragraphs 3.3.4 and 5.3.5. The acceptance test plan shall include details to demonstrate compliance with Paragraphs 3.3.1 and 3.3.6.

SD-09 Reports

Material reports shall be furnished for the materials used in each meter. In addition to the specification for the base material, the report shall include the specification for the weld material. Six copies and one electronic copy are due six weeks after award of the contract. The following information shall be shown in the report:

Material Specification (Base Material)
Material Specification of Weld or Bond
Heat Treatment charts and records – as applicable

SD-09 Reports

Prior to commencement of fabrication, the Contractor shall submit six copies and one electronic copy of the following items:

Certified Material Test Reports for plate, forging and welding materials
Certified Impact Test Reports (as applicable)

Certified Nil-ductility Test Reports (as applicable)
Heat Treatment Procedure (as applicable)

SD-09 Reports

The following shall be submitted within one week from the date of any radiograph film shooting and examination:

Electronic images of all radiographs

SD-09 Reports

Six copies and one electronic copy of the following shall be submitted at the time the meter is ready for shipment:

Mill Test Reports
Facsimile of Nameplate Stamping
Manufacturer's Data Report
Hydrostatic Test Report including test set-up configuration and log of time versus pressure
All Reports for Non-Destructive Examinations
Records of all shop repairs
Certified clean reports
Certified calibration reports
Final as-built drawing package

1.3 GOVERNMENT REVIEW

1.3.1 REVIEW NOTATIONS

Contracting Officer will review submittals and provide pertinent notation within 14 calendar days after date of submission. Submittals will be returned to the Contractor with the following notations:

a. Submittals marked "Approved as Submitted." authorize the Contractor to proceed with the work covered.

b. Submittals marked "Approved, Except as Noted, Resubmission Not Required." authorize the Contractor to proceed with the work covered provided he takes no exception to the corrections. Notes shall be incorporated prior to submission of the final submittal.

c. Submittals marked "Approved, Except as Noted, Resubmission Required." require the Contractor to make the necessary corrections and revisions and to re-submit them for approval in the same routine as before, prior to proceeding with any of the work depicted by the submittal.

d. Submittals marked "Will Be Returned By Separate Correspondence" require the Contractor to follow the instructions given in the separate correspondence. If re-submission is required, the Contractor shall re-submit them for approval in the same routine as before prior to proceeding with any of the work depicted by the submittal.

e. Submittals marked "Disapproved" indicate noncompliance with the contract requirements and shall be re-submitted with appropriate changes. No item of work requiring a submittal shall be accomplished until the submittals are approved or approved as noted.

f. Submittals marked "Receipt Acknowledged" confirm receipt only.

g. Submittals marked "Other (Specify)" require the Contractor to follow the instructions given in the separate correspondence. If re-submission is required, the Contractor shall re-submit them for approval in the same routine as before, prior to proceeding with any of the work depicted by the submittal.

Contractor shall make corrections required by the Contracting Officer. If the Contractor considers any correction or notation on the returned submittals to constitute a change to the contract drawings or specifications; notice as required under the clause entitled, "Changes in Contract Documentation" shall be given to the Contracting Officer. Approval of the submittals by the Contracting Officer shall not be construed as a complete check, but will indicate only that the general method of construction and detailing is satisfactory. Contractor shall be responsible for the dimensions and design of connection details and construction of work. Failure to point out deviations may result in the Government requiring rejection and removal of such work at the Contractor's expense.

If changes are necessary to approved submittals, the Contractor shall make such revisions and submission of the submittals in accordance with the procedures above. No item of work requiring a submittal change shall be accomplished until the changed submittals are approved.

2.0 QUALITY AND QUALIFICATION

2.1 GENERAL REQUIREMENTS

Each meter shall be designed, fabricated, tested, cleaned and delivered in accordance with the detailed requirements of this specification. The requirements specified herein are minimum requirements. The Contractor shall take whatever additional measures are necessary in the design, fabrication, inspection, and testing to produce a meter, which will satisfactorily pass the tests specified herein without damage. Where specific requirements are set forth, and where such specific requirements depart from requirements or alternatives

contained in any documents referenced herein, the specific requirements contained herein shall govern and take precedence.

2.2 QUALIFICATION OF MANUFACTURER

The Contractor shall furnish with his bid, certification attesting to a minimum of 5 years experience by the manufacturer in design and manufacture of meters of similar design with the specific service media identified. Qualification name, phone number and address of reference are required. The experience listing shall include a list of meters fabricated, size, location of use, service, and date of manufacture.

2.3 QUALITY ASSURANCE

The Contract Administrator and Government reserve the right to inspect all work at all times during and upon completion of fabrication and to witness any or all tests. The Contractor shall cooperate fully to enable the SSC COTR or Government designated representative to be present at the performance of any or all tests and any other activity as specifically requested. The Contractor shall furnish all equipment and materials for all tests except where specially stated otherwise. The Contractor shall notify the COTR fourteen calendar (14) calendar days prior to performance of any and all tests.

As a minimum, the following hold points shall apply:

Item No.	Surveillance	Type
1	Government review and approval of welding procedures, qualification records, and welder certifications, prior to commencement of any welding.	Verification
2	Government review of valve component stress and fatigue calculations	Verification
3	Radiography buy off prior to final assembly*	Verification
4	Packaging of valve for shipment	Witness
5	Repeatability and Vibration tests	Witness
6	Functional Test/Calibration	Witness
	*Final Buy-offs of x-rays to be performed by SSC NDE	

2.4 WELDING PROCEDURE AND WELDING OPERATOR QUALIFICATIONS

2.4.1 GENERAL

Welding procedure and welders qualifications shall be performed in accordance with Section IX of the ASME Boiler and Pressure Vessel Code.

2.4.2 WELDING PROCEDURE

Prior to valve fabrication, welding procedures shall be submitted to the CO for approval.

2.4.3 QUALIFICATION OF WELDERS

The determination of the qualification of welders, and the requirements for welding shall be in accordance with the applicable portions of the above referenced code and shall be submitted to CO for approval prior to any welding.

2.4.4 WELD RODS

Weld rods shall be suitable for the type of welding to be performed. Rods shall be stored to prevent contamination and deterioration by moisture. A drying oven or heater shall be used in accordance with recommendations and instructions of the manufacturer.

2.5 GUARANTEE

All equipment to be furnished under this specification shall be guaranteed against defective materials, design, and workmanship for a minimum period of one year from installation not to exceed 18 months after receipt of the meter. Upon receipt of notice of failure of any part of the guaranteed equipment during the guarantee period, new replacement parts shall be furnished and installed promptly by the Contractor at no additional cost. The Contractor shall acknowledge his responsibility under these guarantee provisions by letter, stating the inclusive dates of the guarantee period for which the equipment and materials referred herein are guaranteed.

3.0 REQUIREMENTS

3.1 GENERAL

3.1.1 FLOW RANGE

The fluid and operating volumetric flow rate change are shown in Table 1 on page 19.

3.1.2 PRESSURE AND TEMPERATURE

Operating temperature and pressure are shown in Table 1 on page 19.

3.1.3 OVER-RANGE FLOW

The flowmeter shall withstand bursts of liquid flow rate to 150% of the maximum flow rate shown in Table 1 on page 19 for ten (10) seconds, with no change in structural integrity, calibration, or flowmeter performance.

3.1.4 GAS FLOW

The flowmeter shall withstand gas flow up to 30% of the maximum flow rate shown in Table 1 on page 19 for ten (10) minutes without damage to the bearings, and no change in calibration or flowmeter performance. "Gas Flow" is construed to mean vapor phase of the service fluid (Table 1 on page 19).

3.1.5 VIBRATION

When installed in its piping section, the flowmeter shall withstand vibration of the following levels in any axis:

- 20 Hz to 70 Hz ---------- .012 G^2 (rms)/Hz
- 70 Hz to 100 Hz ---------- +18 db/octave rise
- 100 Hz to 318 Hz ---------- .120 G^2 (rms)/Hz
- 318 Hz to 400 Hz ---------- +12 db/octave rise
- 400 Hz to 2000 Hz ---------- .3 G^2 (rms)/Hz
- Composite reference level = 22.9 G (rms)

There shall be no significant resonance points in the meter below 200 Hz

3.1.6 THERMAL SHOCK

The flowmeter shall withstand sudden chill from ambient to the minimum temperature (Table 1 on page 19) corresponding to complete quench in the service liquid, with no change in structural integrity, calibration or performance.

3.1.7 TRANSIENT FLOW

The flowmeter shall withstand flow rate increase from 0 to the maximum (Table 1 on page 19) in 300 milliseconds.

3.1.8 INTERFACES

1. The flowmeter will be installed in 12 inch Schedule 40 pipe
2. The flowmeter shall attach to the piping system by ANSI 300 lb. raised-face flanges with concentric serrations.
3. Figure 1 on page 20 shows the length of the flowmeter between flanges, the inlet diameter and the exit diameter with tolerances.
4. Figure 2 on page 21 shows the clocking of the pick up coil boss and dimensions for the boss
5. The flowmeter body shall be capable of withstanding the following forces and moments, which may be transmitted to it by the piping system, without damage and without change of calibration.
    a. Torsion 5,000 lb-ft
    b. Bending moment 500 lb-ft
    c. Vertical force 750 lb

6. Lifting lugs or other suitable means of lifting the flowmeter shall be provided and installed as part of the contract.

3.1.9 ORIENTATION

The flowmeter shall function according to this specification when installed in any orientation. It is planned that the flowmeter will be installed in A1 test stand in the vertical position with flow in the downward direction.

3.2 MATERIALS AND FABRICATION

All materials shall be new and shall conform to the latest applicable specifications and standards.

3.2.1 ACCEPTABLE MATERIALS

The following materials are required; any other materials must to be evaluated and approved prior to use. All materials are to be certified. All materials in contact with the working fluid must be compatible with water, liquid oxygen, and liquid nitrogen.

Supports ------ weldments – 304L, 316L, 321, 347 stainless steels
non-welded – 300 series stainless steel
Bearings ------ Balls – Silicon Nitride;
Cage & Race Material - Per vendor's recommendation.
Retainers ----- 300 series stainless steel
Rotor ---------- nickel 200

3.2.2 WELDMENTS

All welds must be 100% penetration, void-free and fully stress relieved. Vendor must include weld design information with proposed design. X-ray inspection of housing welds required. Lifting lug and coil boss welds excluded from 100% requirement and X-ray inspection. Welds shall be backed with Argon only, no Nitrogen.

3.2.3 ROTORS

Preference is for a rotor machined entirely from a single piece of material. Special care must be exercised to prevent stress concentration, especially at blade roots. If a shroud is employed, design must be approved by the Government.

3.2.4 BEARINGS

Primary rotor bearings shall be radial retainer ball type, for both radial and axial loads. Secondary bearings shall be employed and must use AMPCO 18. These shall support the rotor in the event of a primary bearing failure.

3.2.5 ASSEMBLY AND DISASSEMBLY

All wear points shall be capable of easy replacement. All fasteners shall be locked with deformed expendable locks, except that lock wiring shall not be employed. No special tools shall be required for disassembly for replacement of worn parts. The rotor shall be marked to show flow direction.

3.2.6 DYNAMIC BALANCE

The rotor shall be dynamically balanced per International Standard ISO 1940 to balance grade of G6.3.

3.2.7 SPECIAL STRESS SITUATIONS

The following stress situations are examples of special concern:

1. Axial support stresses due to drag, including transient flow effects.
2. Bearing loads due to drag, transient flow and vibration.
3. Rotor blade stresses due to drag, transient flow and vibration.
4. Rotor shroud (if used) stresses from drag, centrifugal force and vibration.
5. Housing loads due to mechanical interfaces.

The vendor shall submit as a minimum an engineering analysis of these stress concerns with the design evaluation drawings, per submittal section 1.2.

3.2.8 PICKUP COILS

The flowmeter shall be designed to operate with two pickup coils mounted 180 degrees apart in the same plane. Pickup coils shall be located as shown in Figures 1and 2. Coils will be Government Furnished Equipment (GFE) and shall be delivered to the vendor for flowmeter testing. The pickup coils are manufactured per Rocketdyne specifications IES6-015C-1A and IES6-015C (see attachments). The flowmeter shall be designed to operate with pickup coils that are built to these specifications.

3.2.9 IDENTIFICATION

The flowmeter shall be permanently identified on the outside of the assembly with the following information:

- Manufacturer
- Specification and dash number or Contract number
- Serial number
- Liquid service
- Maximum flow rate (GPM)
- Flow direction
- Hydro Test pressure and date

3.2.10 ENVIRONMENT

The flowmeter shall function according to this specification under exposure to the following exterior environments:

- Temperature - 0° to 120° F
- Humidity – 10% to 100%
- Heavy rain
- Sand and dust

3.3 PERFORMANCE

3.3.1 OUTPUT FREQUENCY

At the maximum flow rate (Table 1 on page 19) output frequency shall be at least 600 Hz.

3.3.2 OUTPUT VOLTAGE

At the minimum flow rate (Table 1 on page 19) output signal amplitude shall be at least 100 millivolts peak-to-peak across a 10,000 ohm resistive load. At all flow rates within the operating range (Table 1 on page 19); the output waveform must be uniform, with no secondary peaks, and with positive portion above 10 percent greater in duration than 1/3 of the pulse repetition period. These requirements shall be met when the flowmeter is equipped with supplied pickup coils. Reference Figure A below.

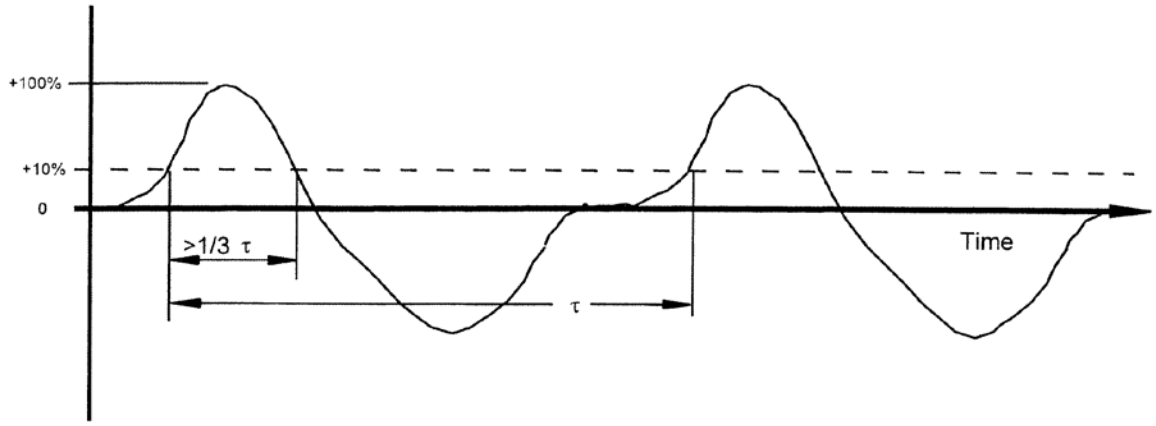

Figure A

3.3.3 NON-LINEARITY

Non-linearity is defined as deviation of calibration factor from the mean over the operating range (Table 1 on page 19). Non-linearity shall be less than ± 0.25% for flow rates specified in Table 1 on page 19.

3.3.4 REPEATABILITY

The repeatability error shall be less than ± 0.1% (95% confidence level) at the minimum flow rate (Table 1 on page 19). This shall be demonstrated by the vendor, utilizing the correlation technique presented herein. The flowmeter shall be installed in series with another flowmeter in a water calibration facility. Ten (10) repeat runs at the minimum flow rate shall be made. The simultaneous totaled counts (cycles) for each flowmeter, together with the time increment, temperature of the liquid, and its volume, shall be recorded for each run. If the deviations of the simultaneous flowmeter factors are correlated in both direction and magnitude, then the deviations are due to the calibration facility. If they are not correlated, then the deviations are due to each flowmeter's respective repeatability.

By computing the statistical correlation coefficient **r** and the standard deviation σ for the ten repeats, the respective contributions of facility and flowmeter to σ can be estimated. The following computations shall be made:

Compute the factor ***K*** for each run for each flowmeter:

$$K_{xi} = \frac{X_i}{V_i} \qquad K_{yi} = \frac{Y_i}{V_i}$$

Where $\boldsymbol{X_i}$ and $\boldsymbol{Y_i}$ are the totaled counts (cycles) for the $\boldsymbol{i_{th}}$ run of Flowmeter ***X*** (the flowmeter undergoing acceptance test per paragraph 4.3) and Flowmeter ***Y*** (the comparison flowmeter), respectively. $\boldsymbol{V_i}$ is the corresponding water volume.

Compute the correlation coefficient ***r***:

$$r = \frac{\sum_{i=1}^{n} (K_{xi} \bullet K_{yi}) - \frac{\left(\sum_{i=1}^{n} K_{xi}\right) \bullet \left(\sum_{i=1}^{n} K_{yi}\right)}{n}}{\sqrt{\left[\sum_{i=1}^{n} (K_{xi})^2 - \frac{\left(\sum_{i=1}^{n} K_{xi}\right)^2}{n}\right] \bullet \left[\sum_{i=1}^{n} (K_{yi})^2 - \frac{\left(\sum_{i=1}^{n} K_{yi}\right)^2}{n}\right]}}$$

Where ***n*** is the number of runs.

Compute the mean factors $\boldsymbol{K_x}$ and $\boldsymbol{K_y}$:

$$\overline{Kx} = \frac{\sum_{i=1}^{n} Kx}{n} \qquad \overline{Ky} = \frac{\sum_{i=1}^{n} Ky}{n}$$

Compute the standard deviation **σ**:

$$\sigma_x = \sqrt{\frac{\sum_{i=1}^{n} (K_{xi})^2 - \frac{\left(\sum_{i=1}^{n} K_{xi}\right)^2}{n}}{n-1}} \qquad \sigma_y = \sqrt{\frac{\sum_{i=1}^{n} (K_{yi})^2 - \frac{\left(\sum_{i=1}^{n} K_{yi}\right)^2}{n}}{n-1}}$$

Compute the experimental repeatability (***tCV***) in percent at 95% confidence level:

$$tCVx = \frac{2.26\sigma x \bullet 100}{\overline{K_x}} \qquad tCV_y = \frac{2.26\sigma y \bullet 100}{\overline{K_y}}$$

Finally, calculate the flowmeter repeatability (***tCV_m***):

$tCV_{mx} = (tCV_x) \bullet \sqrt{1-r^2}$; repeatability of Flowmeter ***X*** (the flowmeter per this specification)

$tCV_{my} = (tCV_y) \bullet \sqrt{1-r^2}$; repeatability of Flowmeter ***Y*** (the comparison flowmeter)

The quantity (***tCV_m***) shall be less than 0.1% for compliance with the specification. If ***r*** is negative and ***tCV*** is greater than 0.1%, then the test is not entirely conclusive. Additional tests may be required in that instance.

Alternatively, the vendor may demonstrate individual flowmeter repeatability by calibration against a volumetric standard, but the Government must evaluate the standards prior to testing. Standards used and facility error, must have a demonstrated combined uncertainty of 0.03% reading or less. Standards must be NIST traceable.

3.3.5 BACK PRESSURE

Operation of the flowmeter without degradation of performance due to cavitation effects shall be required at back pressures no greater than 20 psi above the liquid's vapor pressure at inlet conditions.

3.3.6 PRESSURE LOSS

At the maximum flow rate (Table 1 on page 19) the overall pressure loss shall not exceed 2 psi, using water at 70° F.

3.3.7 ELECTRICAL DISCHARGE

The use of Silicon Nitride Ceramic bearings allows the flowmeter rotor to remain electrically isolated from the housing. At the flow ranges specified in Table 1 on page 19, electrical discharge from the rotor that could have detrimental effects on flowmeter hardware or pose an ignition hazard in LOX shall not occur.

4.0 DESIGN EVALUATION

4.1 PROPOSAL EVALUATION

The Government shall review the designs proposed by the vendor. Each proposal must include:

1. A written description of the design scheme. The description must include the expected frequency output and rotational speed at the maximum flow rate.
2. A representative cross-sectional assembly drawing of the design.
3. A preliminary schedule of activity showing key tasks, milestones, long-lead items and delivery date.

Vendors are encouraged to use an existing “stock” design if possible, adapting it by suitable means to the applications described by this specification. The Government shall consider all indications of vendors’ past performance in evaluating the features of each design.

4.2 DESIGN REVIEW

4.2.1 DESIGN REVIEW

A design review shall be held before actual fabrication begins. This shall be within 6 weeks after a purchase order is released. All drawings, specifications, calculations and data which will be reviewed shall be transmitted by the Vendor to the Government so as to arrive 14 calendar days before the review.

5.0 ACCEPTANCE TESTS

5.1 DEFINITION

Certain acceptance tests are to be performed on each flowmeter upon receipt. These shall include:

- Workmanship (5.3.1)

- Installation dimensions (5.3.3)

Other tests shall be performed by the vendor at any facility mutually acceptable to the Government and the vendor. These include:

- Output signal (5.3.2)
- Vibration (5.3.4) (single flowmeter shall be chosen to represent all)
- Repeatability (5.3.5)
- Non-linearity (3.3.3)
- Compliance with Paragraphs 3.3.1 and 3.3.7

Test fixtures shall be furnished by the vendor.

5.2 WITNESS

The Government's representatives shall be allowed to witness the Repeatability and Vibration tests. Fourteen (14) days notice shall be given prior to each test.

5.3 TESTS

5.3.1 WORKMANSHIP

The flowmeter shall be examined for good workmanship and adherence to design drawings. Of particular interest are welds, surface condition, and elimination of burrs.

5.3.2 OUTPUT SIGNAL

The flowmeter shall be mounted in a test fixture with two (2) pickup coils located in accordance with Figure 2 on page 21. One coil shall be loaded with 10,000 ohms. Rotor shall be spun with gas for a total cumulative time of 60 seconds. The output signal characteristics shall be in accordance with Paragraph 3.3.2.

5.3.3 INSTALLATION DIMENSIONS

The flowmeter shall be measured to verify envelope dimensions in accordance with Figure 1 on page 20.

5.3.4 VIBRATION

5.3.4.1 RESONANCE SEARCH

The flowmeter shall be mounted in a steel test fixture. The assembly shall be subjected to sinusoidal vibration along three (3) mutually perpendicular axes, one of which is the spin axis of the flowmeter. Sweeps shall be from 5 Hz to 200 Hz, at one (1) octave per minute. Using an accelerometer mounted on the fixture, coaxial with the vibrator axis, determine that there are no significant resonances. One (1) sweep shall be made on each axis.

5.3.4.2 RANDOM VIBRATION TEST

The flowmeter shall be subjected to random vibration with the spectral distribution shown in Paragraph 3.1.5, for one (1) hour on each of three (3) mutually perpendicular axes, one (1) of which shall be the spin axis. There shall be no evidence of structural failure, such as cracking or galling. Dye penetrant inspection shall be used to check for cracks. After the test, the flowmeter shall be examined for damage.

5.3.5 REPEATABILITY

The flowmeter shall be tested in accordance with Paragraph 3.3.4.

5.3.6 TEST RESULTS

All data and analysis results generated during the acceptance testing of the flowmeter shall be documented and provided to the Customer as required in the submittal Section 1.2.

6.0 PREPARATION FOR DELIVERY

6.1 CLEANING

Prior to shipment to Stennis Space Center, the flowmeter shall be cleaned in accordance with RPTSTD-8070-0001, Level 750A.

6.2 PACKAGING

The Vendor shall be responsible for shipping the flowmeter to Stennis Space Center (SSC). Packaging shall meet the requirements of NASA/SSC Drawing 54000-GP11.

The Vendor shall be responsible for packing the flowmeter for shipment. Packing shall adequately protect the flowmeter, and especially the rotor bearings, from damage during shipment. Packing shall maintain the level of cleanliness specified herein until the flowmeter is received at SSC.

If any covers are used to protect the pickup coil bosses, they shall not be welded to the flowmeter casing.

The flowmeter must be shipped assembled, the cleanliness specified herein shall be maintained during assembly and until the flowmeter is accepted by the Customer at Stennis Space Center.

6.3 DRAWINGS

A complete drawing package, including a detailed cross-sectional drawing, shall be included with the flowmeters, per the submittal Section 1.2.

6.4 DOCUMENTATION

Written operational guidelines shall be included with the flowmeters at delivery. Guidelines shall include design parameters, maintenance requirements, flowmeter capabilities, and any special limitations.

6.5 SPARE PARTS

A complete parts and pricing list shall be provided with the flowmeters at delivery.

6.6 PRODUCT PROTECTION

All threaded connections shall be kept sealed with caps or plugs to prevent entry of contaminants. Suitable closures shall be used to cover the flowmeter entrance and exit planes while the unit it stored. These must maintain flowmeter cleanliness level and protect the flowmeter from moisture contamination and damage of sealing surfaces.

Table 1

	LIQUID OXYGEN		
FLOW PARAMETER	**MINIMIUM**	**MAXIMIUM**	**NOMINAL**
PRESSURE (PSIG)	12.3	450	205
TEMPERATURE (RANKINE)	157	178	166
DENSITY (lb/ft^3)	69.9	72.6	70.8
FLOW RATE (GPM)	3500	7000	6300

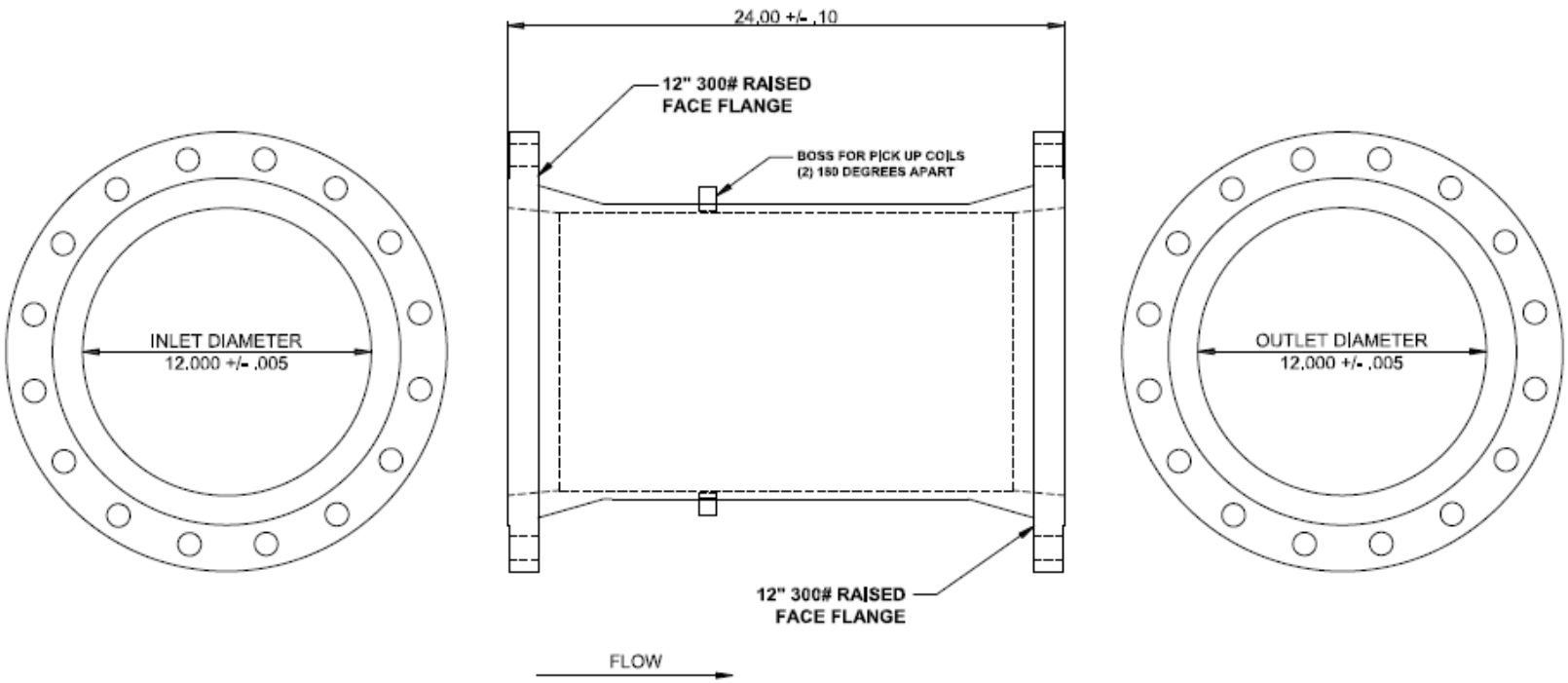

NOTE: FLANGES SHALL HAVE CONCENTRIC SERRATIONS

FIGURE 1

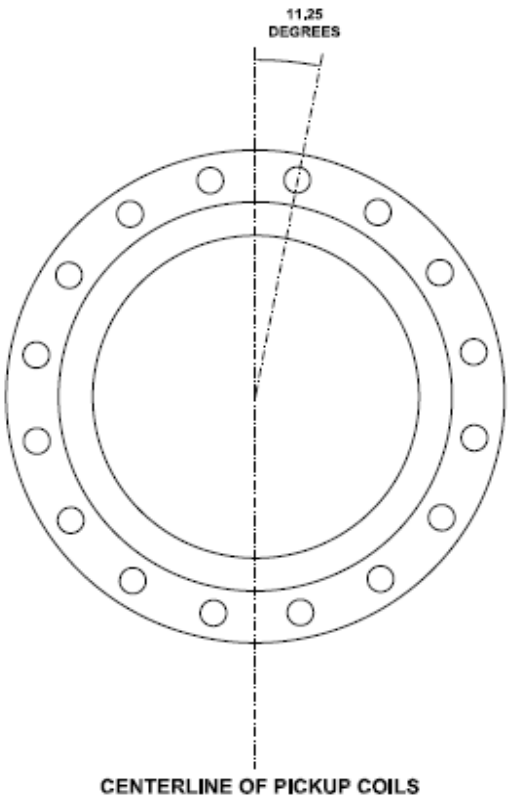
11.25
DEGREES
CENTERLINE OF PICKUP COILS

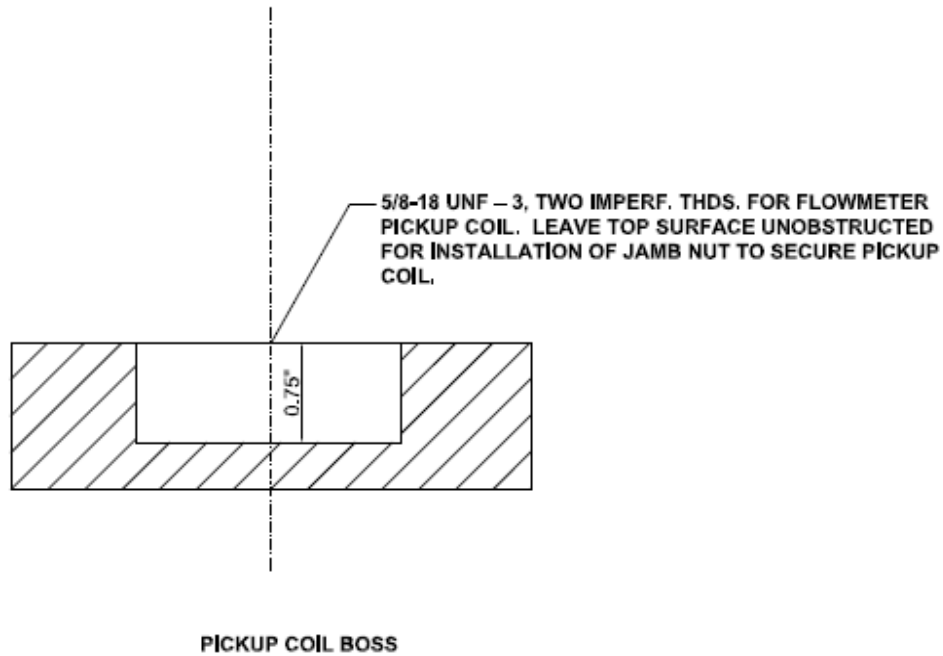
5/8-18 UNF – 3, TWO IMPERF. THDS. FOR FLOWMETER PICKUP COIL. LEAVE TOP SURFACE UNOBSTRUCTED FOR INSTALLATION OF JAMB NUT TO SECURE PICKUP COIL.
0.75"
PICKUP COIL BOSS

FIGURE 2

Appendix I

IES 6-015C-1A

Specification For Flowmeter Pick Up Coils

9044G/0220G

Rockwell International
Rocketdyne Division

IES 6-015C-1A

DUAL ELEMENT MAGNETIC PICKUP

SPECIFIC SPECIFICATION

Written by:

J. M. Benson
Instrumentation Engineering
December 1989

Note: This issue supersedes and replaces the original issue and its revisions

Revised by: J. M. Benson
Instrumentation Engineering
February 1990

Approved by: D. C. Heim
Manager
Instrumentation Systems

Rockwell International
Rocketdyne Division

1.0 MANUFACTURER

This Specific Specification applies to the following manufacturer:

Industrial and Biomedical Sensors Corporation
1393 Main Street
Waltham, Massachusetts 02154

2.0 APPLICABLE BASIC SPECIFICATION

The following Basic Specification shall form a part of this Specific Specification:

IES 6-015C
Dual Element Magnetic Pickup

3.0 DEVIATIONS

3.1 All qualification tests will be conducted by Rocketdyne at no cost to IBS (reference Section 5.0 of IES 6-015C).

3.2 Performance Requirements

3.2.1 Output: Measurement Coil - A shroud of the size and dimensions of that shown in Figure 1, shall be mounted in a configuration which will allow it to rotate freely about its axis. The pickup coil shall be mounted such that a gap of 0.125 ± .005 inches exists between the shroud and coil face when the coil axis is perpendicular to the shroud axis. The centerline of the coil shall line up with the centerline of the holes of the shroud. At a rotational speed sufficient to produce a frequency of 200 ± 10 hertz from the measurement coil, the output across a 3000 ohm resistive load connected to Pins A and B shall be 0.35 ± 0.20 volts p-p.

This shroud shall be provided to IBS for the purpose of evaluating the performance requirements.

Figure 2

Weld callout has been revised to reflect current industry practices. It includes two welding specifications, in addition to the existing callout.

Rockwell International
Rocketdyne Division

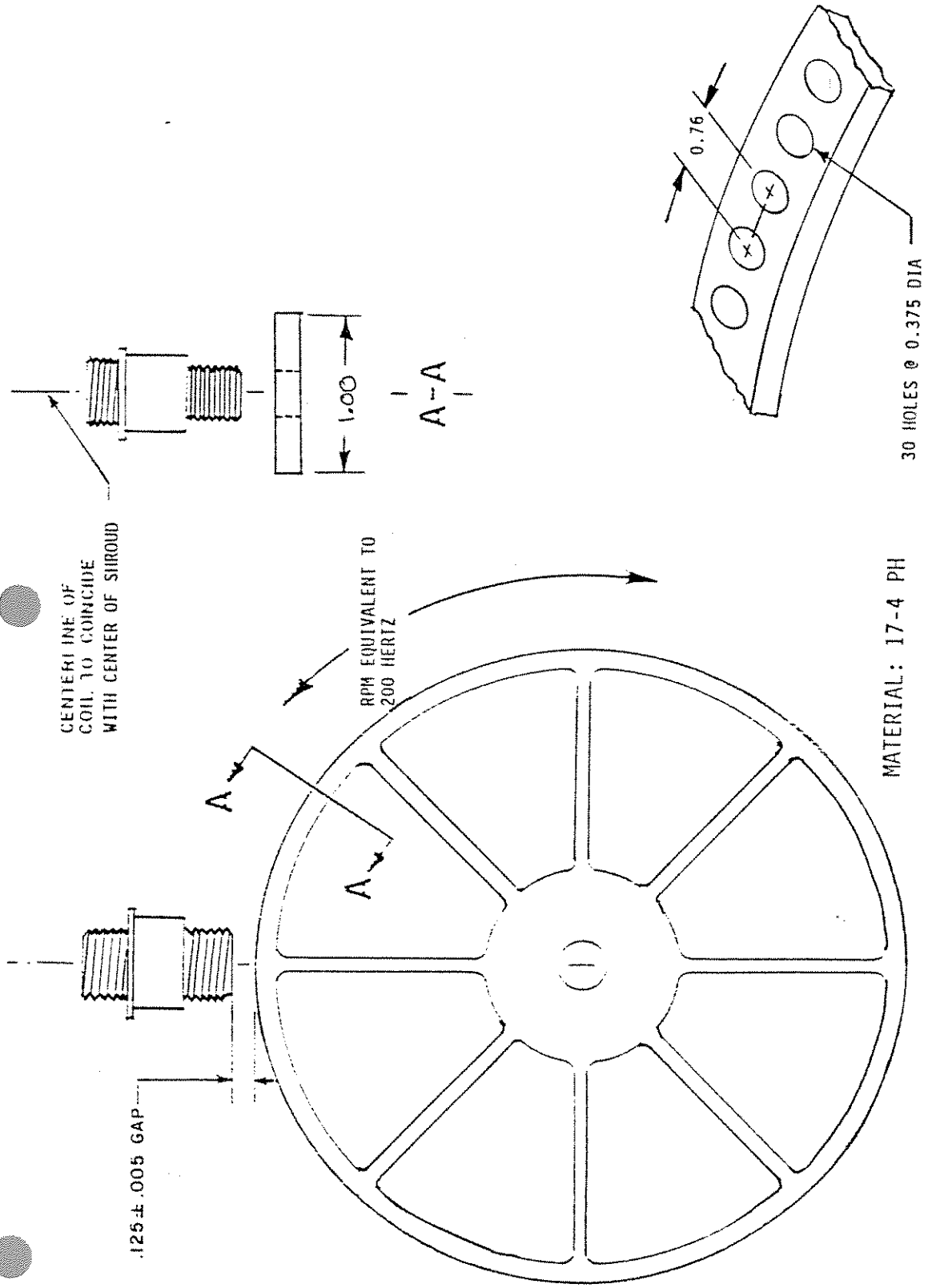

Figure 1

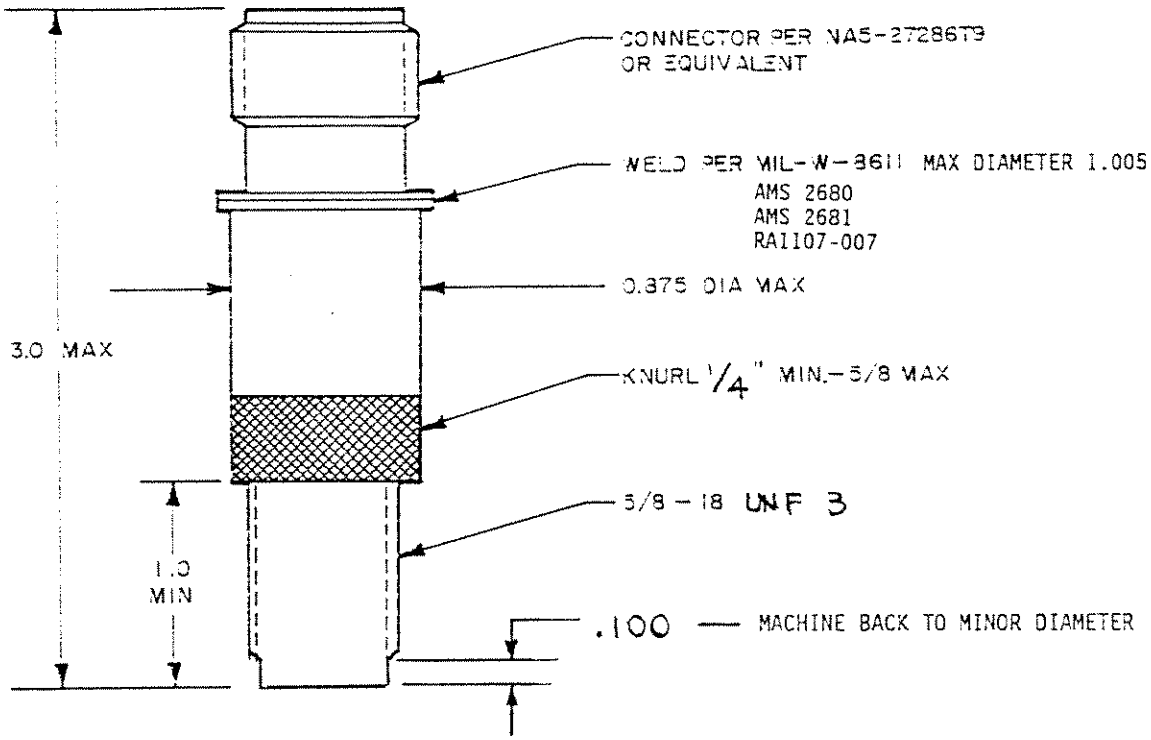
CONNECTOR PER NAS-27286T9
OR EQUIVALENT
WELD PER MIL-W-8611 MAX DIAMETER 1.005
AMS 2680
AMS 2681
RA1107-007
0.875 DIA MAX
3.0 MAX
KNURL 1/4" MIN.-5/8 MAX
5/8 - 18 UNF 3
1.0
MIN
.100
MACHINE BACK TO MINOR DIAMETER

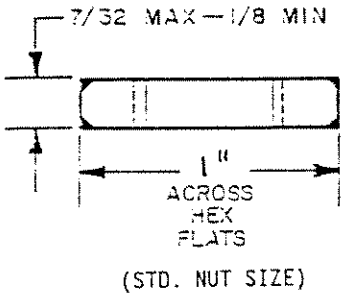
7/32 MAX-1/8 MIN
1"
ACROSS
HEX
FLATS
(STD. NUT SIZE)

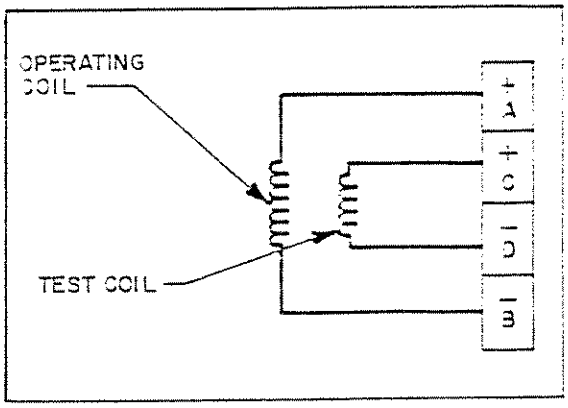
OPERATING
COIL
TEST COIL
+ A
+ C
- D
- B

Figure 2

Rocketdyne
North American Rockwell

IES 6-015C

DUAL ELEMENT MAGNETIC PICKUP

Written by: D. C. Heim
November 1966

Revised by: J. J. Lindquist
October 1973
December 1973

Approved: A. T. Bruschi
A. T. Bruschi
Manager
Instrumentation

1.0 SCOPE

This specification covers the requirements for a magnetic pickup to be used in conjunction with a turbine type flowmeter.

2.0 BASIC AND SPECIFIC SPECIFICATIONS

This Basic Specification covers the requirements for the pickup. Separate Specific Specifications will be issued to designate those suppliers whose products have been approved for procurement under this Basic Specification.

3.0 REQUIREMENTS

3.1 General Requirements

3.1.1 The magnetic pickup shall be designated on the principle whereby the motion of a magnetically permeable material by, and in close proximity to, a stationary coil with a permanent magnet core induces a voltage in the coil. This coil will be herein referred to as the measurement coil. The pickup shall also contain a separate, electrically isolated coil located in such a manner that when excited by an A.C. voltage, a similar voltage will be induced in the measurement coil. The coils and core with an appropriate stainless steel encasement shall be referred to as a "pickup coil".

3.1.2 Dissimilar Metals: Unless suitably protected against electrolytic corrosion, dissimilar metals shall not be used in intimate contact with each other. Dissimilar metals are defined in MS 33586.

3.1.3 Design Changes: Changes in the design, materials, processes, performance and/or dimensions of the magnetic pickup shall not be made after the specific specification has been issued unless prior written approval is obtained from Rocketdyne Engineering.

3.1.4 Finish: All materials used in the magnetic pickup shall be treated to resist corrosion if not inherently corrosion resistant. No pits, scratches, or defects shall be present.

3.1.5 Mounting: Mounting provisions shall be provided as indicated in Figure 1. The pickup will be screwed into a 5/8-18 threaded boss of a maximum .75 inch depth and locked in place by torqueing a lock nut to 10 foot pounds. The lock nut and pickup combination shall be capable of installation in the boss detailed in Figure 3. A non-magnetic stainless steel locknut shall be furnished with each pickup.

3.1.6 Electrical Connector: A four pin electrical connector with stainless steel shell shall be provided as an integral part of the pickup coil. The connector shall mate and provide a moisture proof seal with an MS 3106E-14S-2S electrical connector.

3.1.7 Coil Encasement: The pickup coil assembly shall be completely encased in a one piece stainless steel housing except for the face through which the connector pins protrude. Any junction between the connector part of the encasement and the coil portion of the encasement shall provide a hermetic seal by means of welding.

3.1.8 Identification: The pickup coil shall have at least the following information permanently applied.

1. Rocketdyne Specific Specification Number and revision letter.
2. Manufacturers part number and name or trademark.
3. Date of manufacture or code.

3.2 Performance Requirements

3.2.1 Output: Measurement coil - A 17-4 PH shroud of the size and dimensions of that shown in Figure 2 shall be mounted in a configuration which will allow it to be rotated freely about its axis. The pickup coil shall be mounted such that a gap of .125 $\pm$ .005 inches exists between the shroud and coil face when the coil axis is perpendicular to the shroud axis. The centerline of the coil shall line up with the outer edge of the notched teeth. At a speed of 200 $\pm$ 10 RPM, the output across a 3000 ohm resistive load connected to pins A and B shall be .35 $\pm$ .20 V p-p.

3.2.2 Wave Shape: The output voltage measured in para. 3.2.1 shall be continuous and sinusoidal.

3.2.3 Vibration Induced Noise: Steady state noise output shall be less than 50 mv p-p with no resonance points above 100 mv p-p during vibration per para. 3.3.3.

3.2.4 Simulated Output Voltage: When the checkout coil is excited with a 1.50 volt p-p sine wave at a frequency of 200 cps, a .15V (min) p-p simulated output shall be measured across a 3000 ohm resistance connected to the measurement coil pins A and B.

3.2.5 Insulation Resistance: The insulation resistance shall exceed 1000 megohms at 500 VDC when measured between any pin and the case and when measured between pins A and C.

3.2.6 Coil Resistance: The D.C. resistance of the measurement coil shall be less than 2000 ohms.

3.2.7 Case Leakage: The pickup case shall show leakage rate equivalent to less than 1×10^{-6} cc of helium/second (at standard conditions).

3.3 The magnetic pickup shall maintain electrical continuity when subjected to the following environment - simulating conditions.

3.3.1 Thermal Shock: With pickup stabilized at room temperature, submerge it in liquid nitrogen for ten minutes. Remove and warm to room temperature. Repeat cycle 100 times.

3.3.2 Mechanical Shock: Subject the pickup to three shocks in each direction along three mutually perpendicular axes, each with a maximum acceleration exceeding 100 g's.

3.3.3 Cold Vibration: With the pickup mounted in a block which has been stabilized at $-300 \pm 20^{\circ}F$, subject the unit to the following vibration levels. Scan from 5 to 2000 Hz at 1 octave/minute

3.3.3 (Continued)

and return, exceeding the following minimum levels:

5 Hz to 13 Hz @ .380" D.A.
13 Hz to 55 Hz @ 3.3 g peak
55 Hz to 140 Hz @ .022" D.A.
140 Hz to 2000 Hz @ 22 g peak

Perform the above scan along three mutually perpendicular axes, one of which is the primary axis of pickup coil.

4.0 PREPARATION FOR DELIVERY

4.1 Cleaning

Prior to packaging, the magnetic pickup shall be cleaned and dried by any suitable method which will not be detrimental to the physical, mechanical, or other functional properties of the magnetic pickup.

4.2 Packaging

Enclose each pickup in a clean, dry polyethylene bag (4 mil min) and close the open end by heat sealing. Each pickup shall be packaged in an individual box suitable for protection of the pickup from damage during normal handling, shipment, and storage.

5.0 QUALIFICATION TESTS

At Rocketdyne's election, a representative sample of the supplier's product per this specification shall be subjected to any or all of the conditions specified in para. 3.2 and 3.3 to demonstrate compliance. Costs (if any) incident thereto shall be negotiated with the supplier.

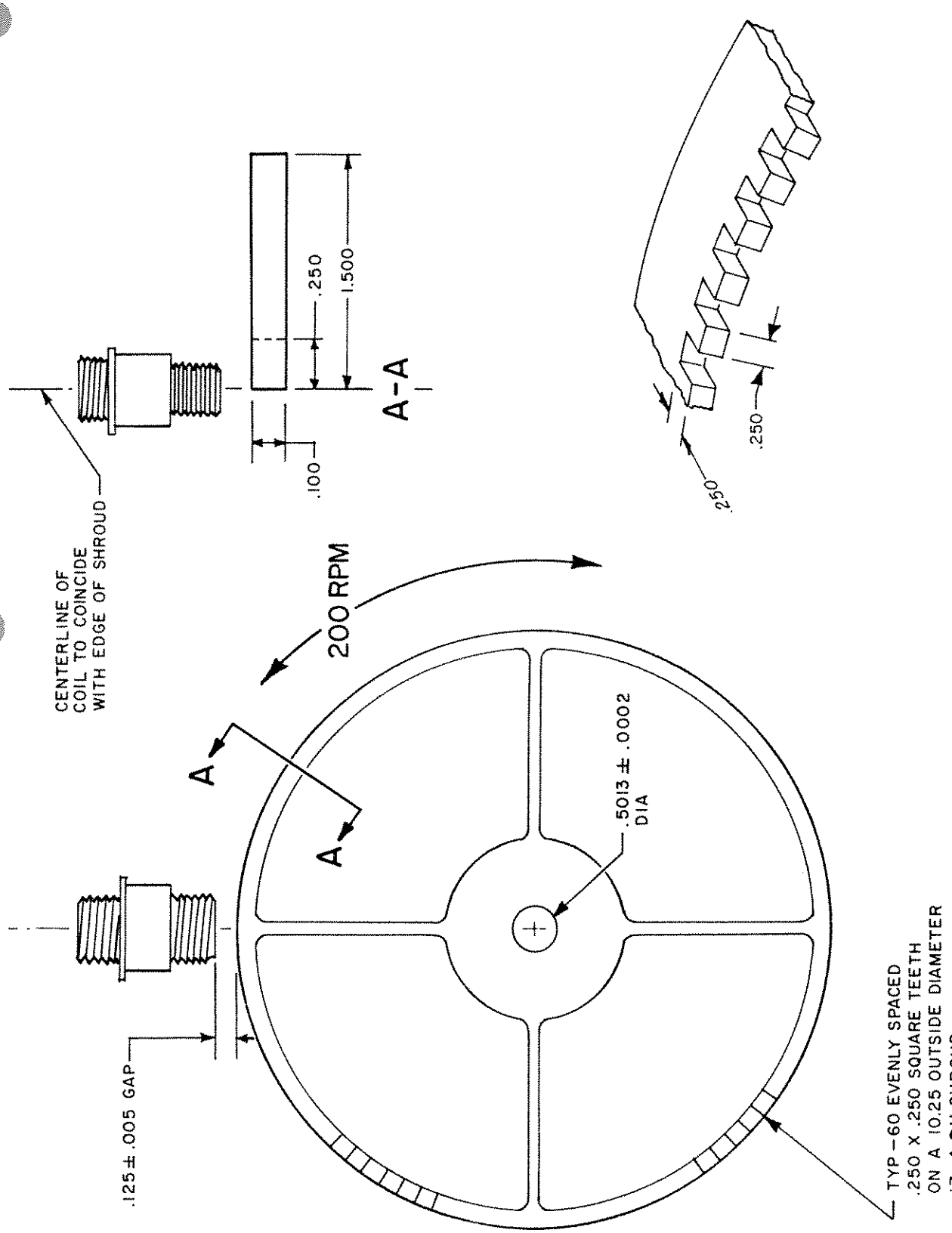
CENTERLINE OF
COIL TO COINCIDE
WITH EDGE OF SHROUD
.100
.250
1.500
A-A
.250
.250
200 RPM
A
A
.5013 ± .0002
DIA
.125 ± .005 GAP
TYP – 60 EVENLY SPACED
.250 X .250 SQUARE TEETH
ON A 10.25 OUTSIDE DIAMETER
17-4 PH SHROUD

FIGURE 2

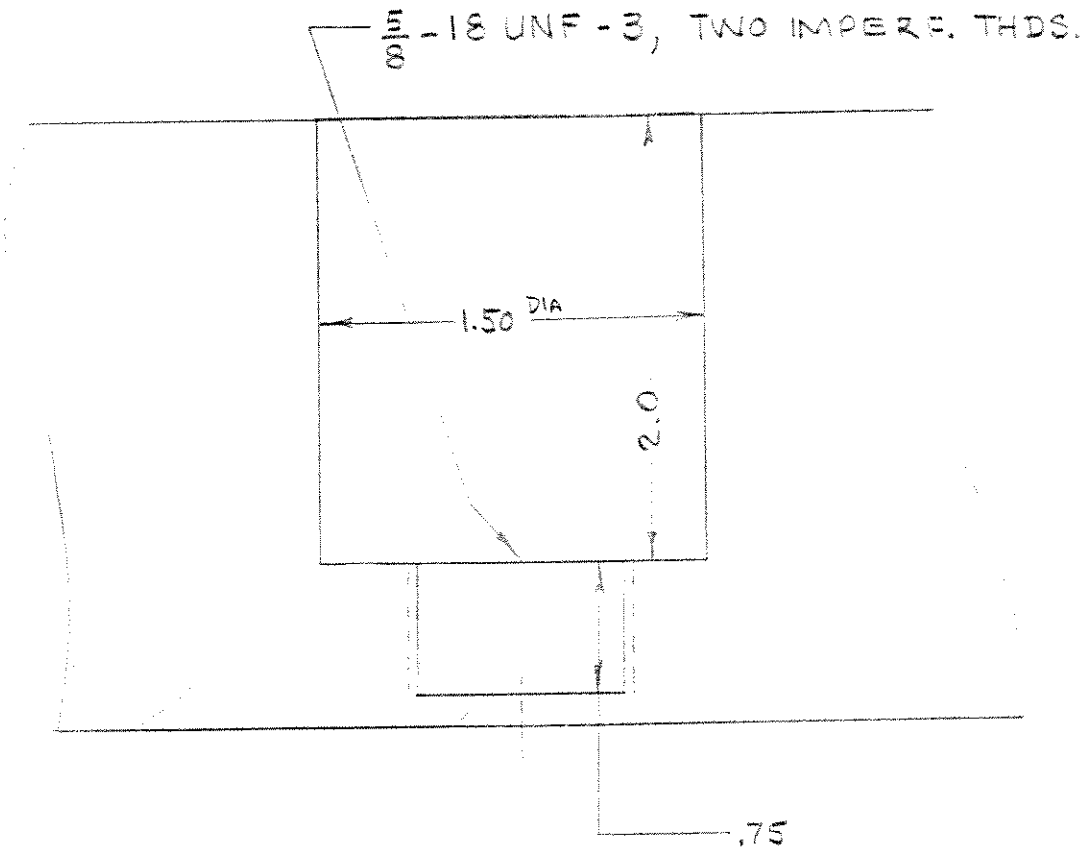

FIGURE 3

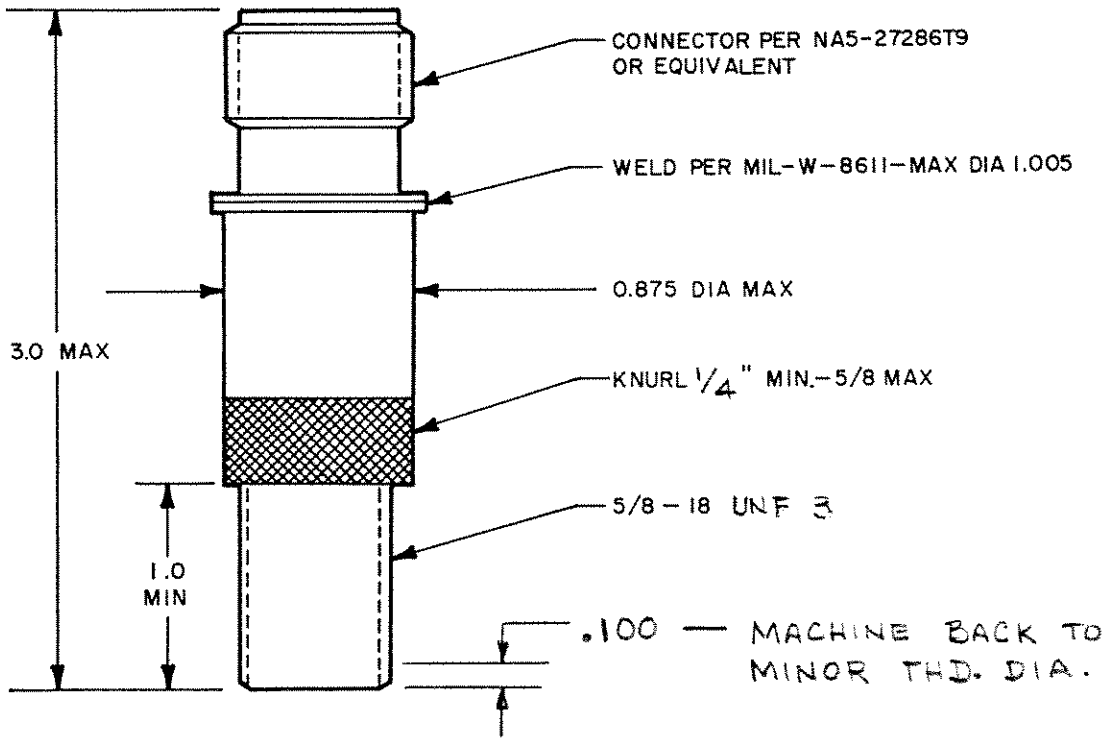
CONNECTOR PER NA5-27286T9
OR EQUIVALENT
WELD PER MIL-W-8611-MAX DIA 1.005
0.875 DIA MAX
3.0 MAX
KNURL 1/4" MIN.-5/8 MAX
5/8 - 18 UNF 3
1.0
MIN
.100 — MACHINE BACK TO
MINOR THD. DIA.

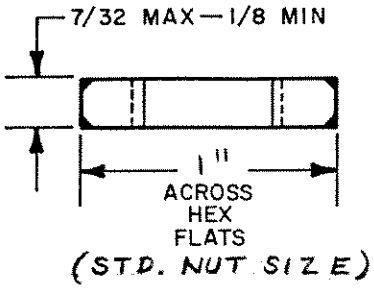
7/32 MAX—1/8 MIN
1"
ACROSS
HEX
FLATS
(STD. NUT SIZE)

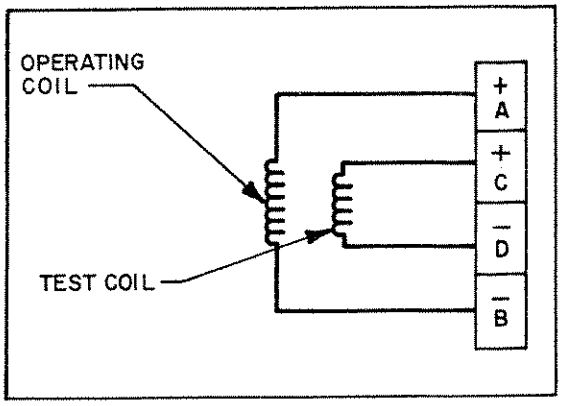
OPERATING
COIL
TEST COIL
+
A
+
C
−
D
−
B

FIGURE 1