SPECIFICATION
FOR PROCUREMENT OF
TWELVE INCH CRYOGENIC LIQUID/GAS HYDROGEN
VENT FLEX HOSES FOR LH BARGE DOCKS
11CH0-GM12
MARCH 2013
Revision 1

ISSUED CEF

MAR 2 9 2013

PREPARED BY:

3/21/13

Doug Dike
Mechanical Engineer
Jacobs-FOSC

SUBMITTED BY:

Michael T. Easley

Mike Easley
Design Engineering Manager
O&M Test Group

APPROVED:

Todd Mannion
NASA

PREPARED BY:
Jacobs Technology
Stennis Space Center
Stennis Space Center, Mississippi 39529

Change/ Revision	Change Date	Originator/ Phone	Description
Basic	2/26/2013		
1	3/2013	Doug Dike/ ext. 8-2803	Added Code of Construction requirement in Paragraph 4.3.

ISSUED CEF MAR 2 9 2013

SPECIFICATION
FOR PROCUREMENT OF
TWELVE INCH CRYOGENIC LIQUID/GAS HYDROGEN
VENT FLEX HOSES FOR LH BARGE DOCKS
11CH0-GM12
SEPTEMBER, 2012

ISSUED CEF

OCT 0 3 2012

PREPARED BY:

Doug Dike
Mechanical Engineer
Jacobs-FOSC

SUBMITTED BY:

Mike Easley
Design Engineering Manager
O&M Test Group

APPROVED:

9/14/12
For Dale Sewell
NASA

PREPARED BY:
Jacobs Technology
Stennis Space Center
Stennis Space Center, Mississippi 39529

Table of Contents

1.0 SCOPE **4**
2.0 APPLICABLE DOCUMENTS **4**
3.0 SUBMITTALS **4**
4.0 REQUIREMENTS **4**
4.1 Design **4**
4.1.1 Flex Hoses 4
4.2 Documentation **5**
4.3 Marking and Identification **6**
4.4 Quality Assurance **6**
4.4.1 Testing 6
4.4.2 Casting 6
4.4.3 Forging 6
4.4.4 Cleaning 6
4.4.5 Source Inspection 7
4.4.6 Welding 7
4.5 Preparation for delivery **7**

SPECIFICATION FOR PROCUREMENT OF TWELVE INCH CRYOGENIC LIQUID/GAS HYDROGEN VENT FLEX HOSES FOR LH BARGE DOCKS 11CH0-GM12

1.0 SCOPE

Procure three each twelve inch liquid/gas hydrogen cryogenic fully compressed flex hoses which will be used at LH Dock Position 1, 2 and 3 at NASA Stennis Space Center, Mississippi.

2.0 APPLICABLE DOCUMENTS

ASME B31.3 – ASME Process Piping
ASME Section VIII, Pressure Vessels, Paragraph UW-51
ASME Section IX – Welding
SSC Drawing 54000-GC01 – Commercial Cleaning Process at Manufacturer's Facility
SSC Drawing 54000-GC11 – Forging, Steel, Quality and Inspection Requirements
SSC Drawing 54000-GD01 – Drawings and Documentation Valves and Components
SSC Drawing 54000-GP01 -- Packaging and Identification Valves and Components
SSC Drawing 54B00-GF00 -- Flex Hose, Cryogenic Insulated, General
SSC Form 581 -- Contractor Transmittal Sheet

3.0 SUBMITTALS

A standard transmittal form provided by the Government, SSC Form 581, shall be used to transmit each submittal. Six (6) black line prints and one electronic copy created in PDF format will be submitted with SSC Form 581.

Submittal description including drawings, diagrams, layouts, schematics, descriptive literature, illustrations, schedules, performance and test data, and similar materials to be furnished by the Contractor are explaining in detail specific portions (Section 4.0 Requirements) of the work required by the contract. The requirements to actually furnish the applicable items will be called out in each specification.

4.0 REQUIREMENTS

4.1 Design

4.1.1 Flex Hoses

4.1.1.1 Service
Liquid and gaseous hydrogen

4.1.1.2 *Size*
Two each--12 inch inner X 18 inch outer jacket length--20 feet long
One each—12 inch inner X18 inch outer--19 feet long

4.1.1.3 *Design pressure*
100 psi

4.1.1.4 *Temperature*
-423 deg F to 150 deg F

4.1.1.5 *End connections*
ANSI 150# Lap Joint flange on one end and ANSI 150# fixed weld neck flange on the other end. Flange face finishes shall be concentric serrated.

4.1.1.6 *Material of construction (Body & trim)*
ASTM 304/304L/316/316L/321grade stainless steel

4.1.1.7 *Fabrication*
The flex hoses shall be fabricated per the requirements in this specification and to the drawing in Attachment I of this specification. To facilitate installation and handling, one end of each hose shall have an extended pipe with stops as shown on the drawing in Attachment I. The flex hose shall be fully compressed to increase the flexibility of the hose.

4.1.1.8 *Movement*
Lateral – Seven (7) inches ± three (3) inches
Minimum number of lateral movement (cycles) before failure -- 1000
Bend Radius – Four (4) feet

4.1.1.9 *Insulation*
Fiber blanket insulation sufficient to prevent cold spots or frost formation on the hose at the most severe operating conditions shall be provided in the annular space between the inner and outer hoses.

4.2 Documentation

Documentation shall be per the requirements of SSC Drawing 54000-GD01. Approval drawings are to be submitted to SSC prior to start of fabrication.

4.3 Marking and Identification

Marking and identification shall be per the requirements of 54000-GP01. The hose's Code of Construction, if applicable, shall be included with the data required in 54000-GP01, Paragraph 1.0. Each hose shall be marked by one of the following locator numbers:

FH-3A09-HV
FH-3A19-HV
FH-TBD

4.4 Quality Assurance

4.4.1 Testing

The flex hose assembly shall meet the testing requirements of SSC Drawing 54B00-GF00. Contractor shall submit a test procedure for approval that addresses testing and examinations.

The following is a clarification of SSC Drawing 54B00-GF00:

Paragraph 11: a) Inner Hose
All welds shall be 100% radiograph inspected, if practical. If not practical, then welds shall be 100% dye penetrant inspected. The seam weld of the tube to be used for the convolutions of the inner hose shall be 100% radiograph inspected prior to the convolutions being formed. Radiographs are to be submitted to SSC for approval prior to proceeding with forming the convolutions.

b) Outer Hose
No radiograph inspection is required. All welds shall be dye penetrant inspected.

Paragraph 15: Proof test of the inner hose shall be 1½ times the design pressure of 100 psi.

Paragraph 19: Not applicable. See SSC Drawing 54000-GC01 for requirements.

4.4.2 Casting

No castings are allowed.

4.4.3 Forging

Forging shall be per the requirements of SSC Drawing 54000-GC11.

4.4.4 Cleaning

Cleaning shall be per the requirements of SSC Drawing 54000-GC01.

4.4.5 Source Inspection

Source Inspection is required. All testing and examination shall be witnessed by a Government representative who has final approval on all testing and examination results.

4.4.6 Welding

Welding procedures and welder certifications shall be per the requirements of ASME Section IX of the Boiler Code. All welding shall be 100% radiographic examined per ASME Section VIII, UW-51 where practical. If radiographic examination is not practical then welds are to be 100% dye penetrant root and final inspected.

4.5 Preparation for delivery

The flex hoses shall be prepared for delivery per the requirements of SSC Drawing 54B00-GF00.

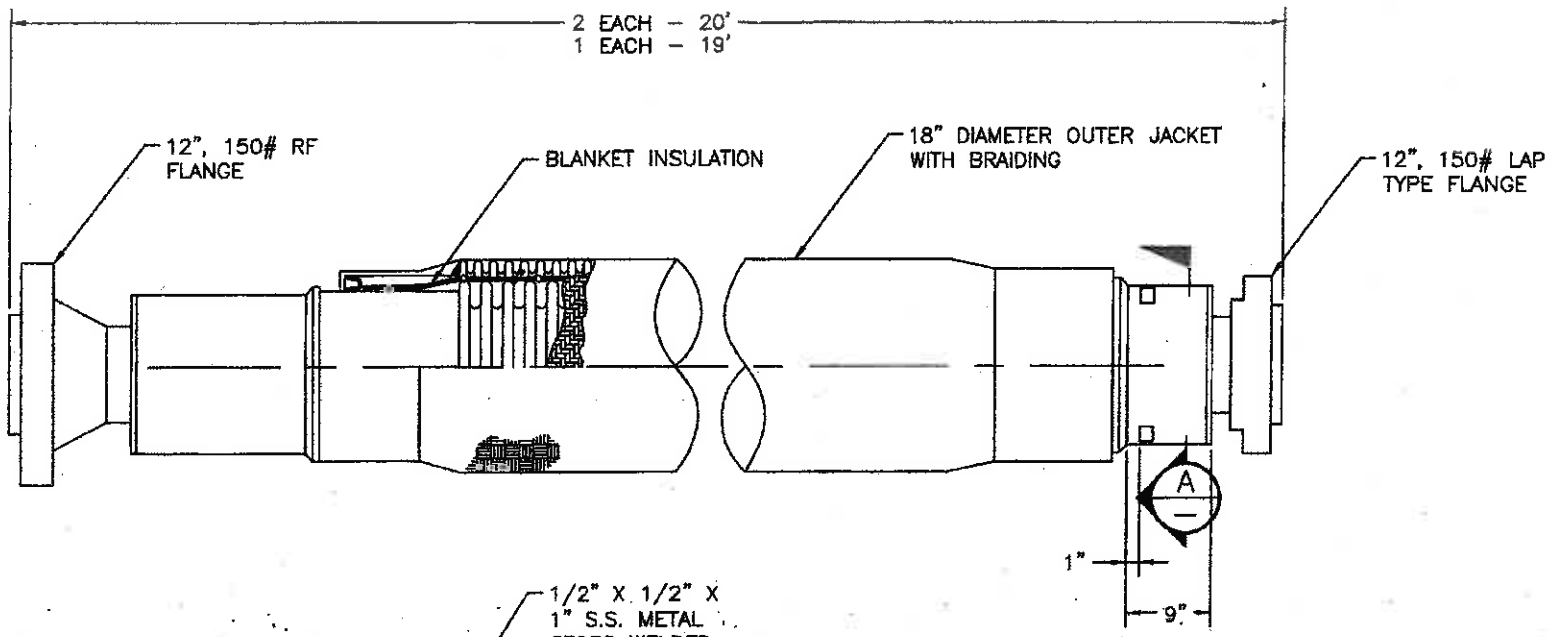

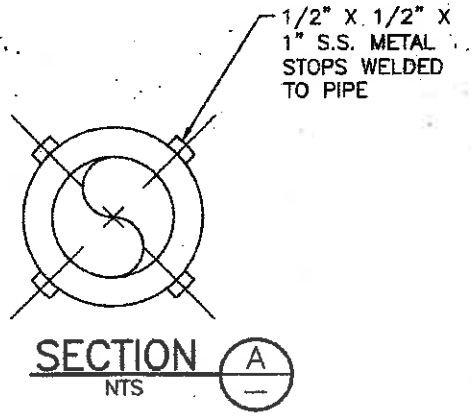

ATTACHMENT I

SYM	ZONE	DESCRIPTION	DATE	APPROVED

REVISIONS

SIGNATURE	DATE
DRAWN	
CHECKED	
ENGINEER	
ISSUED	
SUBMITTED	
NASA SAFETY	
APPROVED	
U.S. GOV	

NATIONAL AERONAUTICS AND SPACE ADMINISTRATION

JOHN C. STENNIS SPACE CENTER SSC, MS 39529-6000

LH FLEXIBLE VENT HOSE JACKETED 12" X 18"

CADD CONTROLLED DRAWING
CADD P/N:

SIZE B | DWG. NO. 11CH0-GM12 | REV.

AUTHORITY | SHEET

SYM	ZONE	DESCRIPTION	DATE	APPROVED
1		DELETED PARAGRAPH 6, "PROPRIETARY NOTICES". REVISED PARAGRAPHS 10, 13, AND 18. ADDED PARAGRAPH 21 AND TABLE I. DIRECT DRAWING CHANGE PER PTMEM81114. T.D.S. 5/2/00 MAM 5/4/00 (RES T1-2497)	5/30/00 5/23/00	ISSUED/CEF SDM

REVISIONS

	SIGNATURE	DATE
DRAWN	K. DUONION	11/30/67
CHECKED	E. CARRECA	1/4/68
ENGINEER	D. DECERBO	2/23/68
ISSUED	ISUUED/CEF	3/15/68
SUBMITTED	L. LEMAY	2/26/68
NASA SAFETY		
APPROVED	R.H. SMITH	2/29/68

USED ON 54B00-D001

NATIONAL AERONAUTICS AND SPACE ADMINISTRATION

JOHN C. STENNIS SPACE CENTER
SSC, MS 39529-6000

FLEX HOSE CRYOGENIC INSULATED, GENERAL

SIZE B | DWG. NO. 54B00-GF00 | REV. 1

AUTHORITY NASAW-410 MOD MSFC-1 | SHEET 1 OF 3

CADD CONTROLLED DRAWING
CADD P/N: SCD\54B00\GF001R1\SHT1

1. SCOPE

THIS DRAWING COVERS THE DESIGN, FABRICATION, CLEANING, AND TESTING OF CRYOGENIC FLEXIBLE HOSE ASSEMBLIES.

DESIGN REQUIREMENTS

2. APPLICABLE PUBLICATIONS

ASME, BOILER AND PRESSURE VESSEL CODE

SECTION VIII RULES FOR UNFIRED PRESSURE VESSEL
SECTION IX WELDING

3. GENERAL REQUIREMENTS

THE CRYOGENIC FLEXIBLE HOSE ASSEMBLY SHALL BE DESIGNED, FABRICATED, TESTED, AND CLEANED WITH THE REQUIREMENTS SPECIFIED HEREIN. THE MANUFACTURER SHALL PROVIDE ANY ADDITIONAL MEASURES NECESSARY TO PRODUCE EQUIPMENT WHICH WILL SATISFACTORILY PASS THE TESTS SPECIFIED HEREIN. THIS SSC DWG SHALL GOVERN AND TAKE PRECEDENCE WHERE IT MAY DEPART OR CONFLICT WITH PROVISIONS OF REFERENCED DOCUMENTS.

4. MATERIALS

ALL MATERIALS SHALL BE FREE FROM ALL DEFECTS IMPAIRING STRENGTH, DURABILITY, AND APPEARANCE AND BE OF THE BEST COMMERCIAL QUALITY FOR THE PURPOSE SPECIFIED. ALL MATERIALS SHALL BE NEW AND SHALL HAVE STRUCTURAL PROPERTIES TO SAFELY WITHSTAND STRESSES TO WHICH THEY ARE SUBJECTED AT THE DESIGN CONDITIONS.

5. DRAWINGS AND DATA

PRIOR TO START OF FABRICATION, THE MANUFACTURER SHALL SUBMIT DRAWINGS AND DATA TO THE PURCHASER FOR APPROVAL. APPROVAL OF DRAWINGS AND DATA IS REQUIRED PRIOR TO START OF FABRICATION. THE DRAWINGS AND DATA SHALL INCLUDE DESIGN OF ENTIRE HOSE, INCLUDING CONNECTIONS, DESIGN CALCULATIONS, AND ALL OTHER DETAILS OF DESIGN AND CONSTRUCTION. FABRICATION DRAWINGS SHALL INDICATE ALL DIMENSIONS OF THE HOSE ASSEMBLIES. INSTALLATION, ASSEMBLY, AND SECTIONAL DRAWINGS SHALL BE COMPLETE IN ALL DETAILS. THIS APPLIES ON INITIAL PROCUREMENT ONLY. THE MANUFACTURER THEREFORE WILL NOT BE REQUIRED TO COMPLY WITH THIS SPECIFICATION WHEN HE CAN SHOW THAT THE DRAWINGS AND DATA REQUIRED HEREIN HAS BEEN PREVIOUSLY FURNISHED TO THE PURCHASER.

6. APPROVAL OF DEPARTURES

ANY DEPARTURES FROM THESE SPECIFICATIONS SHALL BE SUBMITTED FOR APPROVAL. APPROVED DEPARTURES SHALL BE INCORPORATED IN THE WORK AT NO ADDITIONAL COST.

7. RESPONSIBILITY

APPROVAL OF DRAWINGS AND DATA SHALL NOT RELIEVE THE MANUFACTURER FROM ANY RESPONSIBILITY UNDER THE CODES REFERENCED HEREIN OR FOR ANY DEVIATION FROM SPECIFICATIONS, ERROR, OR OMISSION WHICH MAY EXIST. THE MANUFACTURER SHALL BE RESPONSIBLE FOR ADEQUATE DESIGN, DETAILS, FABRICATION, AND CONSTRUCTION OF ALL WORK.

8. FABRICATION

FLEXIBLE HOSE SHALL BE MADE SO THAT INSPECTION AND CLEANING CAN BE ACCOMPLISHED. APPROVED WELDING PROCEDURES SHALL BE FOLLOWED USING MATERIALS COMPATIBLE WITH AND RECOMMENDED FOR USE WITH THE BASE METAL. CARE SHALL BE TAKEN THAT NO VOIDS, SCALE, BLOWHOLES, AND/OR OTHER DEFECTS ARE PRESENT. ALL WELDS SHALL HAVE 100 PERCENT PENETRATION. ALL MATING PARTS SHALL BE GAUGED TO INSURE PROPER MATING AND INTER-CHANGEABILITY OF LIKE STANDARD PARTS. CARE SHALL BE TAKEN DURING CONSTRUCTION TO INSURE A HIGH STANDARD OF CLEANLINESS OF ALL PARTS.

9. WELDING

STAINLESS STEEL WELDING SHALL BE GAS TUNGSTEN ARC PROCESS. AN INERT GAS PURGE SHALL BE MAINTAINED DURING THE ROOT PASS AND ALL SUBSEQUENT PASSES. ALL WELDING SHALL BE PERFORMED AND INSPECTED IN ACCORDANCE WITH THE ASME, BOILER AND PRESSURE VESSEL CODE, SECTION VIII AND IX FOR UNFIRED PRESSURE VESSELS. MANUFACTURER SHALL CERTIFY THAT THE WELDS ARE WITHIN REQUIRED SPECIFICATIONS.

10. RADIOGRAPHY

ALL HOSE WELDS, INCLUDING SEAM WELDS, SHALL BE 100 PERCENT RADIOGRAPHED IN ACCORDANCE WITH ASME, BOILER AND PRESSURE VESSEL CODE, SECTION VIII, PARAGRAPH UW51 FOR UNFIRED PRESSURE VESSELS. RADIOGRAPHS SHALL BE SUBMITTED FOR APPROVAL PRIOR TO FORMING THE CONVOLUTIONS. WELDS THAT CANNOT BE RADIOGRAPHIC INSPECTED SHALL BE DYE PENETRANT INSPECTED USING A SOLVENT OR WATER REMOVAL TYPE PENETRANTS. INDICATIONS REQUIRING REWORK ARE AS NOTED IN TABLE I.

TABLE I. INDICATIONS FOUND DURING EVALUATION REQUIRING REWORK

TYPE OF INDICATION	DESCRIPTION
RELEVANT	THOSE INDICATIONS WITH MAJOR DIMENSION GREATER THAN 1/16"
LINEAR	THOSE INDICATIONS IN WHICH THEIR LENGTH IS EQUAL TO OR GREATER THAN THREE (3) TIMES THEIR WIDTH
ROUNDED	CIRCULAR OR ELLIPTICAL INDICATIONS WITH A LENGTH LESS THAN THREE (3) TIMES THEIR WIDTH

11. ANNEALING

ALL STAINLESS STEEL MATERIAL SHALL BE IN THE FULLY ANNEALED CONDITION PRIOR TO FABRICATION. PARTS SEVERELY COLD WORKED DURING FABRICATION SHALL BE ANNEALED BEFORE ANY WELDING IS PERFORMED. ANNEALING SHALL BE COMPATIBLE WITH, AND SHALL NOT DETRACT FROM, THE MAXIMUM CORROSION-RESISTANT CHARACTERISTICS OF THE MATERIAL.

TESTING

12. WITNESS OF TEST

PRIOR TO PURCHASER'S ACCEPTANCE, THE FLEXIBLE HOSES SHALL BE SUBJECTED TO THE FOLLOWING TESTS IN THE SEQUENCE LISTED HEREIN. THE PURCHASER'S AUTHORIZED REPRESENTATIVE SHALL WITNESS ALL THE TESTS, IF SPECIFIED ON THE PURCHASE ORDER. THE MANUFACTURER SHALL NOTIFY THE PURCHASER A MINIMUM OF 72 HOURS PRIOR TO A SCHEDULED TEST SEQUENCE.

13. COLD SHOCK TEST

EACH CRYOGENIC FLEXIBLE HOSE SHALL BE COLD SHOCK TESTED WITH LIQUID NITROGEN AT ITS SPECIFIED DESIGN PRESSURE. THIS TEST CONDITION SHALL BE MAINTAINED FOR A MINIMUM OF 30 MINUTES. THERE SHALL BE NO VISIBLE LEAKAGE OR DEFORMATIONS.

14. PROOF TEST

EACH HOSE SHALL BE HYDROSTATICALLY TESTED AT TWO TIMES THE DESIGN PRESSURE WITH THE ENDS UNRESTRAINED AND FREE TO MOVE. THE HYDROSTATIC TEST SHALL BE PERFORMED USING WATER FILTERED TO REMOVE PARTICLES THAT WILL NOT PASS THROUGH A 400-MESH SCREEN. EACH SECTION SHALL BE PROVEN TIGHT BY SHOWING NO DECREASE IN TEST PRESSURE FOR 5 MINUTES, WITH THE PRESSURE SOURCE DISCONNECTED.

15. LEAK TEST

EACH CRYOGENIC FLEXIBLE HOSE SHALL BE SUBJECTED TO A PNEUMATIC LEAK TEST AT THE DESIGN PRESSURE USING A 10% HELIUM, 90% NITROGEN MIXTURE. THERE SHALL BE NO INDICATION OF LEAKAGE WHEN CHECKED WITH A MASS SPECTROMETER SET TO A SENSITIVITY OF 1 X 10-8 ATMOSPHERIC CC'S PER SECOND OF HELIUM.

16. REJECTION

FAILURE TO MEET ANY OF THE ABOVE SPECIFIED TESTS' REQUIREMENTS SHALL RESULT IN REJECTION OF THE EQUIPMENT UNDER TEST.

17. CERTIFICATION AND REPORTS

THE MANUFACTURER SHALL FURNISH THREE COPIES OF ALL CERTIFICATION AND TEST REPORTS TO THE PURCHASER WITHIN ONE WEEK AFTER COMPLETION OF THE WORK.

18. CLEANING

COMMERCIAL CLEAN PER SSC 54000-GC01 UNLESS OTHERWISE SPECIFIED BY THE PURCHASE ORDER.

19. SHIPPING

CRYOGENIC FLEXIBLE HOSE ASSEMBLIES SHALL HAVE END CONNECTION COVERS, PLUGS, OR CAPS SUITABLE TO PREVENT MOISTURE AND/OR CONTAMINATES ENTRANCE, WITH DOUBLE POLYETHYLENE BAGS PROPERLY SEALED PRIOR TO SHIPPING OR STORAGE. COILING AND RESTRAINING WITH A NONMETALLIC MATERIAL IS PERMITTED AS LONG AS THE COIL TIGHTNESS DOES NOT EXCEED THE NATURAL LAY OF THE HOSE MATERIAL. WHEN MORE THAN ONE ASSEMBLY IS SHIPPED IN ONE CONTAINER, ASSEMBLIES SHALL BE PACKED TO PREVENT CHAFING. CONTAINERS SHALL BE LEGIBLY MARKED WITH MINIMUM OF 1/2 INCH LETTERS AS TO CONTENTS BY NOMENCLATURE, SIZE, AND QUANTITY EACH.

20. IDENTIFICATION

EACH CRYOGENIC FLEXIBLE HOSE ASSEMBLY SHALL HAVE STAMPED INTO ITS METAL THE FOLLOWING INFORMATION:

HOSE TYPE
DESIGN TEMPERATURE
DESIGN PRESSURE
SERVICE
HOSE NUMBER
SERIAL NUMBER

21. REFERENCES

SSC DWG 54000-GC01 COMMERCIAL CLEANING PROCESS AT MANUFACTURER'S FACILITY

COMMERCIAL CLEANING PROCESS AT THE MANUFACTURER'S FACILITY

1. COMMERCIALLY CLEAN

"Commercially Clean" is defined as visually free of loose slag, water, rust, grit or other foreign solid particles; and containing no visual film of oil, grease or hydrocarbons.

2. CLEANLINESS LEVEL

All surfaces connected to the process fluid shall be in a "commercially clean" condition prior to assembly and leakage testing as required by the applicable specification. Valves specified for service in cryogenic service require that all external surfaces subject to cryogenic temperatures be in a "Commercially Clean" condition prior to performing external leakage tests.

3. CLEANING METHOD AND AGENTS

Cleaning agents and methods shall be at the option of the manufacturer. Cleaning shall be accomplished by any method, or combination of methods, which assures the "commercially clean" level is attained.

4. INSPECTION

"Commercially Clean" valves as received from the manufacturer and upon visual inspection fail to meet the "Commercially Clean" requirements as defined in paragraph 1 and paragraph 2, shall be rejected by the purchaser and returned to the manufacturer.

SYM	ZONE	DESCRIPTION	DATE	APPROVED
A		REMOVED "EXCESSIVE" FROM ITEM 1. ADDED "VISUALLY" AND "WATER" TO ITEM 1. REPLACED "LIQUID HYDROGEN" WITH "CRYOGENIC SERVICE" IN ITEM 2.		
		(SEE HISTORY FILE FOR PREVIOUS REVISIONS)		

REVISIONS

SIGNATURES	DATE
DRAWN R. SWANSON	9/6/68
CHECKED D. A. DiCerbo	9/6/68
ENGINEER D. A. DiCerbo	9/6/68
ISSUED ISSUED/CEF	9/11/68
SUBMITTED R. Ciccarelli	9/6/68
APPROVED E. G. Smith	9/11/68
USED ON 54000-D001	

NASA NATIONAL AERONAUTICS AND SPACE ADMINISTRATION
NATIONAL SPACE TECHNOLOGY LABORATORIES
NSTL STATION, MISSISSIPPI 39529

COMMERCIAL CLEANING PROCESS AT MANUFACTURER'S FACILITY

SIZE | DWG. NO. 54000-GC01 | REV. -

AUTHORITY | SHEET 1 of 1

N9335F

1. SCOPE:

Specified herein are the quality and inspection requirements for steel forgings for high pressure components, which are supplementary to the basic component specification when so indicated by reference.

2. QUALITY REQUIREMENTS:

The quality of the steel forgings provided under this specification shall be determined by liquid penetrant examination & ultrasonic inspection techniques. The minimum acceptable quality requirements for these respective inspection methods are listed below. Where these methods may yield conflicting or contrary indications as to the severity of a defect, the most severe indication will govern the acceptance and/or disposition of the forging in question.

a. Liquid Penetrant Indications. Maximum permissible indications of a liquid penetrant examination made in accordance with ASTM E165-65 shall be as specified in paragraph N-627.7 of Section III of the ASME Boiler and Pressure Vessel Code except that weld repair shall be as specified under Section 4 of this document.

b. Ultrasonic Indications. Maximum defect severity for all discontinuity types shall be Class AA as indicated by MIL-I-8950B.

3. INSPECTION OF STEEL FORGINGS:

a. General.

(1) Vendor's Responsibility. The various inspections of steel forgings as stipulated herein shall be the responsibility of the vendor. However, it is not the intent of this specification to exclude the use or application of any other inspection procedures or techniques, not specified herein, that may be necessary or desirable in establishing the soundness and serviceability of any forging provided hereunder. All cost associated with the inspections shall be borne by the vendor and be included in the bid or contract price of the component.

(2) Purchaser Surveillance. The Purchaser, or Purchaser's authorized representative, shall have access to witness all phases of the inspections and shall have access to all data and results of such inspections. These data and results must be made available to the Purchaser immediately upon completion or termination of any inspection procedure. All pertinent data relating to their interpretation shall be transferred to and become the property of the Purchaser.

If the Purchaser or his authorized representative has reason to believe that the requirements of this specification are not being met, he the Purchaser or his authorized representative, can suspend the use of any questionable material, equipment, procedures, personnel, etc., on work covered by this specification until compliance with the requirements of this specification is judged satisfactory.

(3) Point of Inspection. The forgings are to be subjected to the inspections as outlined herein upon receipt from the forge shop or prior to any finished machining operations. Inspection of the forging at this point does not relieve the vendor of the responsibility of providing a component that satisfies the intent and requirements of the basic component specification.

b. Liquid Penetrant Inspection. External and internal surfaces of each forging shall be subjected to liquid penetrant inspection. The forging shall be acceptable on the basis of the requirements of paragraph N-627.7 of Section III of the ASME Boiler and Pressure Vessel Code.

c. Ultrasonic Inspection. The forging shall be subjected to an ultrasonic examination in accordance with ASTM A388-65 using the longitudinal beam technique. The types and degrees of defects shall be judged by MIL-I-8950B, Class AA.

4. REPAIR BY WELDING:

Repairs of defects by welding shall be in accordance with the requirements of paragraph UF-37 of Section VIII of the ASME Boiler and Pressure Vessel Code. The procedure qualification shall be performed on test specimen of forged material of the same specification and subjected to the heat treatment before and after welding as will be applied to the work. All welders and operators performing this welding shall also be qualified in accordance with Section IX. When repair welding is done after heat treatment of the forging. The forging shall be postweld heat treated.

SYM	ZONE	PRELIMINARY RELEASE DESCRIPTION	DATE	APPROVED

REVISIONS

SIGNATURES	DATE
DRAWN	
CHECKED	
ENGINEER	
ISSUED	JUN 7 1970
SUBMITTED	
APPROVED	
USED ON 54000-D001 SH. GC1	

NATIONAL AERONAUTICS SPACE ADMINISTRATION
GEORGE C. MARSHALL SPACE FLIGHT CENTER
MISSISSIPPI TEST FACILITY BAY ST. LOUIS, MISSISSIPPI
MTSD GENERAL ELECTRIC

FORGING, STEEL
QUALITY AND INSPECTION REQUIREMENTS

SIZE | DWG. NO. 54000-GC11 | REV.

AUTHORITY WP G21253 | SHEET 1 of 2

5. FREQUENCY OF INSPECTION:

Where more than one forging of a particular design is produced, each of the first five forgings shall be inspected as outlined herein. Where more than five forgings are being produced, the examination shall be performed on the first five, plus one additional forging to represent each five additional forgings. If this additional forging proves to be unacceptable, each of the remaining four forgings in the group shall be inspected.

6. IDENTIFICATION AND MARKING:

Each forging shall be marked with the manufacturer's name and forging identification, including material designation.

7. RECORDS:

The manufacturer shall maintain a quality control system adequate to assure the Purchaser or his authorized representative that all of the requirements of this specification have been and are continuously being met. The quality control system shall include preparing and maintaining written records of at least the following listed items as required by this specification for each forging produced:

a. Chemical Analysis
b. Tensile Properties and Impact Properties
c. Heat Treatment
d. Visual and Dimensional Inspection Results
e. Inspection Results
f. Repair welding

SYM	ZONE	REFER TO SHEET NO. 1. DESCRIPTION	DATE	APPROVED

REVISIONS

SIGNATURES	DATE
DRAWN	
CHECKED	
ENGINEER	
ISSUED JUN 17 1970	
SUBMITTED	
APPROVED	

NATIONAL AERONAUTICS GEORGE C. MARSHALL SPACE FLIGHT CENTER

SPACE ADMINISTRATION MISSISSIPPI TEST FACILITY BAY ST. LOUIS, MISSISSIPPI

MTSD GENERAL ELECTRIC

FORGING STEEL QUALITY AND INSPECTION REQUIREMENTS

SIZE | DWG. NO. 54000-GC11 | REV.

USED ON 54000-D001 Sht. GC-1

AUTHORITY WR G21233

SHEET 2 of 2

SYM	ZONE	DESCRIPTION	DATE	APPROVED
6		ADDED SECTION II AND RENUMBERED REMAINING SECTIONS. IN SECTION III, PART A, NUMBER 3 AND SECTION V, PART A, NUMBER 5: ADDED "DESIGN/MAXIMUM ALLOWABLE WORKING PRESSURE". IN SECTION III, PART A, NUMBER 4: DELETED FCI STD. 58-6 AND ADDED PARA.'S a AND b. IN SECTION V, PART A NUMBER 2; ADDED "MANUFACTURER'S PART NUMBER". REWROTE SECTION III, PART A, NUMBER 2 AND SECTION V, PART A, NUMBER 2 TO MAKE THEM IDENTICAL. IN SECTION V, PART A, NUMBER 4, PARA. b: ADDED "DESIGN/MAXIMUM ALLOWABLE WORKING PRESSURE, MAXIMUM ACTUATION PRESSURE, BURST PRESSURE". IN SECTION V, PART A, NUMBER 4; ADDED PARA. c. IN SECTION V, PART A, NUMBER 7: DELETED FCI STD. 58-2 AND ADDED PARA.'S a AND b. IN SECTION V, PART A; ADDED NUMBERS 10 AND 11. IN SECTION V, PART B, NUMBER 1: ADDED "MAINTENANCE INSTRUCTIONS... FOR ACTUATORS." UPDATED MAILING ADDRESS. CHANGED "MANUFACTURER" TO "CONTRACTOR" WHERE APPLICABLE. SCD WAS REVISED AND REDRAWN IN ITS ENTIRETY AND INC. ARN 5A PER FSR JMFGSPW304. 9/14/93 MAM 8/3/93	ISSUED/CEF JUL 3 1993	
5		COMPLETELY REWRITTEN PER NAS13-1 REQUIREMENTS. ISSUED/CEF 9-13-79	9-10-79	L.B. MIX

REVISIONS

SIGNATURE		DATE
DRAWN	L. HOLDER	10-31-68
CHECKED	L. HOLDER	10-31-68
ENGINEER	D. DICERBO	10-31-68
ISSUED	CEF	11-18-68
SUBMITTED	L. TERRY	10-31-68
NASA SAFETY		
APPROVED	SMITH	10-31-68
USED ON	54000-D001 SH. G2	

NATIONAL AERONAUTICS AND SPACE ADMINISTRATION

JOHN C. STENNIS SPACE CENTER SSC, MS 39529-6000

DRAWINGS AND DOCUMENTATION, VALVES AND COMPONENTS

SIZE B | DWG. NO. 54000-GD01 | REV. 6

AUTHORITY NASA 410 MOD MSFC-1 | SHEET 1 OF 5

AMEND. 90

CADD CONTROLLED DRAWING
CADD P/N.
SCD/54000/GD01R6/SHT1

I. GENERAL

A. THIS SPECIFICATION COVERS THE REQUIREMENTS FOR DRAWINGS AND DOCUMENTATION ON COMPONENTS FOR:

1. REQUESTS FOR QUOTATION ON A FIRST TIME PROCUREMENT.

2. REQUESTS FOR QUOTATION ON SPECIFICATION CONTROL DRAWINGS (SCD).

3. CONFIRMED FIRST TIME PURCHASE ORDERS.

B. THE TERMINOLOGY "PURCHASER" USED THROUGHOUT THIS SPECIFICATION IS INTENDED TO BE INTERPRETED AS THE AGENT AND/OR AGENCY WHOSE PURCHASE ORDER DESIGNATES EITHER DIRECTLY OR BY REFERRAL THIS SPECIFICATION. THE TERMINOLOGY "CONTRACTOR" IS THAT VENDOR OR MANUFACTURER WHO ENTERS INTO A PURCHASE ORDER CONTRACT TO SUPPLY THE GOODS DEFINED BY THIS SPECIFICATION.

II. APPLICABLE PUBLICATIONS

INSTRUMENT SOCIETY OF AMERICA
ANSI/ISA S75.02 CONTROL VALVE CAPACITY TEST PROCEDURE

ASME, BOILER AND PRESSURE VESSSEL CODE
SECTION VIII, DIVISION 1 RULES FOR UNFIRED PRESSURE VESSELS

III. REQUEST FOR QUOTATION ON FIRST TIME PROCUREMENT

A. THE CONTRACTOR SHALL FURNISH TO THE PURCHASER THREE REPRODUCIBLE COPIES OF DRAWINGS DEPICTING THE ITEM(S) TO BE SUPPLIED. IN ADDITION, IF THE CONTRACTOR HAS CADD DRAWINGS DEPICTING THE SUBJECT ITEM(S), THE CONTRACTOR SHALL FURNISH TO THE PURCHASER ONE COMPUTER DISKETTE CONTAINING ALL CADD DRAWINGS THAT ARE COMPATIBLE WITH AUTOCAD, VERSION 11 OR 12. THESE DRAWINGS SHALL INCLUDE THE FOLLOWING:

1. PERTINENT EXTERNAL AND INTERNAL ENVELOPE DIMENSIONS SUCH AS FACE-TO-FACE DIMENSIONS, BORE, END CONNECTIONS, ETC.

2. CROSS-SECTIONAL ASSEMBLY VIEW WITH BUBBLE CALL OUT REFERENCED TO A COMPLETE PARTS LIST. THE PARTS LIST SHTLAL IDENTIFY EACH PIECE PART BY MANUFACTURER'S PART NUMBER AND INCLUDE MATERIAL, SPECIFICATION, STANDARD, ETC. FROM WHICH EACH PIECE PART IS MANUFACTURED. PARTS WHICH ARE PROCURABLE AS AN IDUSTRY WIDE WIDE STANDARD ITEM WILL BE SO IDENTIFIED IN THE PARTS LIST.

3. PRESSURE RATINGS FOR DESIGN/MAXIMUM ALLOWABLE WORKING PRESSURE, PROOF PRESSURE, AND BURST PRESSURE.

4. CERTIFIED CAPACITY RATING:

   a. VALVE COEFFICIENT, Cv, SHALL BE PER ANSI/ISA S75.02. WHERE VALVE COEFFICIENT IS DETERMINED BY ANOTHER PROCEDURE, THE CONTRACTOR WILL PROVIDE THE EXACT DETAILS OF THIS PROCEDURE AND THE METHOD OF CORRELATION WITH ANSI/ISA S75.02.

   b. RELIEF VALVE RELIEVING CAPACITY SHALL BE PER ASME SECTION VIII, DIVISION 1.

5. CONTRACTOR'S PART/MODEL NUMBER.

6. MAXIMUM TORQUE REQUIRED TO OPERATE MANUAL VALVE UNDER OPERATING CONDITIONS.

IV. REQUEST FOR QUOTATION ON SPECIFICATION CONTROL DRAWINGS

A. SUBMITTALS IN RESPONSE TO REQUEST FOR QUOTATION ON A PRODUCT WHICH HAS BEEN INCORPORATED INTO THE SCD AS A STANDARD, NEED NOT BE ACCOMPANIED BY THE CONTRACTOR'S DRAWINGS, PROVIDED THE ASSEMBLY, PIECE PARTS AND MATERIALS IDENTIFIED TO BE SUPPLIED ARE IDENTICAL TO THE PRODUT REPRESENTED BY THE SCD.

B. IF THE CONTRACTOR TAKES EXCEPTION TO THE SCD, SECTION III IS APPLICABLE.

V. PURCHASE ORDER

A. WITHIN ONE WEEK OF RECEIPT OF PURCHASE ORDER THE CONTRACTOR SHALL SUBMIT TO THE PURCHASING AGENT FOR ENGINEERING APPROVAL PRIOR TO THE START OF FABRICATION THREE REPRODUCIBLE COPIES OF DRAWINGS DEPICTING THE ITEM(S) TO BE SUPPLIED. IN ADDITION, IF THE CONTRACTOR HAS CADD DRAWINGS DEPICTING THE SUBJECT ITEM(S), THE CONTRACTOR SHALL FURNISH TO THE PURCHASER ONE COMPUTER DISKETTE CONTAINING ALL CADD DRAWINGS THAT ARE COMPATIBLE WITH AUTOCAD, VERSION 11 OR 12.

RETURN UNAPPROVED DOCUMENTATION WILL BE CORRECTED BY THE CONTRACTOR AND RESUBMITTED WITHIN TEN DAYS. DOCUMENTATION SHOWING THE ACCEPTABLE CONFIGURATION WILL BE RETURNED TO THE CONTRACTOR PRIOR TO START OF FABRICATING. NO CHANGES WILL BE MADE WITHOUT APPROVAL OF THE PURCHASER'S ENGINEERING DEPARTMENTS. DOCUMENTATION SHALL INCLUDE THE FOLLOWING:

1. PERTINENT EXTERNAL AND INTERNAL ENVELOPE DIMENSIONS SUCH AS FACE-TO-FACE DIMENSIONS, BORE, END CONNECTIONS, ETC.

2. CROSS-SECTIONAL ASSEMBLY VIEW WITH BUBBLE CALL OUT REFERENCED TO A COMPLETE PARTS LIST. THE PARTS LIST SHALL IDENTIFY EACH PIECE PART BY MANUFACTURER'S PART NUMBER AND INCLUDE MATERIAL, SPECIFICATION, STANDARD, ETC. FROM WHICH EACH PIECE PART IS MANUFACTURED. PARTS WHICH ARE PROCURABLE AS AN INDUSTRY WIDE STANDARD ITEM WILL BE SO IDENTIFIED IN THE PARTS LIST.

3. DRAWING DETAILS WHICH CANNOT BE PRESENTED CLEARLY IN THE CROSS-SECTION ASSEMBLY DRAWING WILL BE PROVIDED IN BLOWUP FOR CLARITY.

SYM	ZONE	DESCRIPTION	DATE	APPROVED
		REFER TO SHEET NO. 1		

REVISIONS

SIGNATURE	DATE
DRAWN	
CHECKED	
ENGINEER	
ISSUED	
SUBMITTED	
NASA SAFETY	
APPROVED	

NATIONAL AERONAUTICS AND SPACE ADMINISTRATION

JOHN C. STENNIS SPACE CENTER SSC, MS 39529-6000

DRAWINGS AND DOCUMENTATION, VALVES AND COMPONENTS

CADD CONTROLLED DRAWING
CADD P/N:
SCD/54000/GD01R6/SHT3

USED ON 54000-D001 SH. G2

SIZE B | DWG. NO. 54000-GD01 | REV. 6

AUTHORITY | SHEET 3 OF 5

4. ACTUATION INFORMATION AS FOLLOWS:

   a. FOR HANDWHEEL OPERATED VALVE TYPES (CONVENTIONAL, BEVEL GEAR, ETC.): MAXIMUM TORQUE REQUIRED UNDER OPERATIONAL CONDITIONS.

   b. FOR CYLINDER OPERATED VALVES: MANUFACTURER, MODEL, DESIGN/MAXIMUM ALLOWABLE WORKING PRESSURE, MAXIMUM ACTUATION PRESSURE, BURST PRESSURE, STROKE, PISTON DIAMETER, AND CALCULATED THRUST.

   c. A CROSS-SECTIONAL ASSEMBLY VIEW OF ACTUATOR WITH BUBBLE CALL OUT REFERENCED TO A COMPLETE PARTS LIST. THE PARTS LIST SHALL IDENTIFY EACH PIECE PART BY MANUFACTURER'S PART NUMBER AND INCLUDE MATERIAL, SPECIFICATION, STANDARD, ETC. FROM WHICH EACH PIECE PART IS MANUFACTURED. PARTS WHICH ARE PROCURABLE AS AN INDUSTRY WIDE STANDARD ITEM WILL BE SO IDENTIFIED IN THE PARTS LIST.

5. WHERE ALLOWABLE LEAKAGE RATE CRITERIA IS NOT SPECIFIED, THE CONTRACTOR WILL PROVIDE A STATEMENT OF GUARANTEE IN REGARD TO HIS OWN LEAKAGE RATE CRITERIA.

6. TOTAL WEIGHT OF VALVE AND ACTUATOR ASSEMBLY. WHERE AN ACTUATOR OTHER THAN A HAND OPERATED ACTUATOR IS USED, THE WEIGHT OF THE ACTUATING UNIT WILL BE SUPPLIED.

7. CERTIFIED CAPACITY RATING:

   a. VALVE COEFFICIENT, Cv, SHALL BE PER ANSI/ISA S75.02. WHERE VALVE COEFFICIENT IS DETERMINED BY ANOTHER PROCEDURE, THE CONTRACTOR WILL PROVIDE THE EXACT DETAILS OF THIS PROCEDURE AND THE METHOD OF CORRELATION WITH ANSI/ISA S75.02.

   b. RELIEF VALVE RELIEVING CAPACITY SHALL BE PER ASME SECTION VIII, DIVISION I.

8. PRESSURE RATINGS FOR DESIGN/MAXIMUM ALLOWABLE WORKING PRESSURE, PROOF PRESSURE, AND BURST PRESSURE.

9. CONTRACTOR'S PART/MODEL NUMBER.

10. RECOMMENDED SPARE PARTS.

11. ELECTRICAL REQUIREMENTS FOR SOLENOID VALVES AND ELECTRICAL ACTUATORS.

REFER TO SHEET NO. 1

SYM	ZONE	DESCRIPTION	DATE	APPROVED

REVISIONS

SIGNATURE	DATE
DRAWN	
CHECKED	
ENGINEER	
ISSUED	
SUBMITTED	
NASA SAFETY	
APPROVED	
USED ON	

NATIONAL AERONAUTICS AND SPACE ADMINISTRATION

JOHN C. STENNIS SPACE CENTER SSC, MS 39529-6000

DRAWINGS AND DOCUMENTATION, VALVES AND COMPONENTS

CADD CONTROLLED DRAWING
CADD P/N: SCD/54000/GD01R6/SHT4

USED ON 54000-D001 SH. G2

SIZE B | DWG. NO. 54000-GD01 | REV. 6

AUTHORITY | SHEET 4 OF 5

B. WITHIN TWO WEEKS AFTER RECEIPT OF PURCHASE ORDER, THE CONTRACTOR SHALL FURNISH THE FOLLOWING:

1. MAINTENANCE INSTRUCTIONS SHOWING DISASSEMBLY, ASSEMBLY, AND PREVENTATIVE MAINTENANCE PROCEDURES. MAINTENANCE INSTRUCTIONS SHALL ALSO BE FURNISHED FOR ACTUATORS.

2. SPECIAL TOOLS REQUIRED WITH PART/TOOL NUMBER AND COST INCLUDING LEAD TIME REQUIRED FOR PROCUREMENT.

C. THE CONTRACTOR SHALL FURNISH THREE COPIES OF ALL REQUIRED CERTIFICATION AND ALL TEST REPORTS. ONE SET OF THESE DOCUMENTS WILL BE INCLUDED IN THE SHIPMENT. REMAINING TWO COPIES OF ALL REQUIRED DOCUMENTS MUST BE MAILED AS INDICATED IN SECTION VI AT TIME OF SHIPMENT.

VI. MAILING INSTRUCTIONS

JOHN C. STENNIS SPACE CENTER
FOSS CONTRACTOR
PURCHASING DEPT.
STENNIS SPACE CENTER, MS 39529-6000

ATTENTION: (NAME OF PURCHASING AGENT)

SYM	ZONE	DESCRIPTION	DATE	APPROVED
5		UNDER ITEM 1, IDENTIFICATION, ADDED D, H, I, J AND K. MOVED FLAGNOTE 1 TO SHT. 3. CHANGED NSTL TO SSC WHERE APPLICABLE. SCD REVISE AND REDRAWN IN ITS ENTIRETY AND INC ARN 4A PER FSR J1DOGPW204. MAM 9/17/92 RM 8/13/92	10/20/92 10/15/92	ISSUED/CEF SDM
4		RETYPED SHEET 1; ADDED FLAGNOTE 1; DELETED REQUIREMENT FOR CAPACITY/CV TO BE IDENTIFIED ON THE COMPONENT PER FSR 90HD56-03. ISSUED/CEF 06-27-85	6-18-85	R.C. BRUCE JR NASA NSTL FED

REVISIONS

SIGNATURE		DATE
DRAWN	KARL R. SWANSON	10-23-87
CHECKED	CARL CARRECA	10-24-87
ENGINEER	D.A. DECERBO	10-24-87
ISSUED	CEF	1-8-88
SUBMITTED	E. SWAIN	11-8-87
NASA SAFETY		
APPROVED	R.G. SMITH	1-5-88
USED ON	54000-D001	

NATIONAL AERONAUTICS AND SPACE ADMINISTRATION

JOHN C. STENNIS SPACE CENTER
SSC, MS 39529-6000

PACKAGING & IDENTIFICATION VALVES & COMPONENTS

SIZE B | DWG. NO. 54000-GP01 | REV. 5

AUTHORITY NASW-410 MOD MSFC-1 AMEND. 90

SHEET 1 OF 4

CADD CONTROLLED DRAWING
CADD P/N:
SCD.54000-GP01REV5

1. IDENTIFICATION:

EACH VALVE OR COMPONENT SHALL BE FURNISHED WITH THE FOLLOWING DATA PERMANENTLY AFFIXED THERETO:

A. MANUFACTURER
B. DESIGN MODEL OR TYPE NUMBER
C. DESIGN PRESSURE (EXCEPT RELIEF VALVES)
D. PROOF TEST PRESSURE
E. SET PRESSURE (FOR RELIEF VALVES ONLY)
F. SSC SPEC. NO. (IF APPLICABLE)
G. SERIAL NUMBER 1 SHT.4
H. RATING CLASS
I SIZE
J. DESIGN TEMPERATURE
K. MATERIAL
L. ASME CODE STAMP (FOR RELIEF VALVES ONLY)

2. PACKAGING:

A. EACH VALVE OR COMPONENT SHALL BE ADEQUATELY PACKAGED TO PREVENT DAMAGE TO ANY COMPONENT DURING SHIPMENT, HANDLING AND STORAGE.

B. ALL OPENINGS SHALL BE PLUGGED OR SEALED TO PREVENT THE ENTRANCE OF FOREIGN MATERIAL AND/OR MOISTURE.

C. EACH SHIPPING CONTAINER SHALL BE PERMANENTLY MARKED ON TWO EXTERIOR SIDES TO SHOW MANUFACTURER, PURCHASE ORDER NUMBER AND VALVE OR COMPONENT SIZE AND TYPE.

3. SPECIAL PACKAGING REQUIREMENTS FOR BUTTWELD END VALVES

A. DISASSEMBLY. VALVES MAY BE SHIPPED IN A PARTIALLY DISASSEMBLED CONDITION WITH THE TOPWORKS SEPARATED FROM THE BODY. ALL DISASSEMBLED PARTS SHALL BE MATCH MARKED FOR EASE OF FIELD ASSEMBLY.

B. CONTAINER. THE BODY AND TOPWORKS MAY BE PACKED IN EITHER A SINGLE CONTAINER OR IN TWO SEPARATE CONTAINERS AT THE MANUFACTURER'S OPTION. HOWEVER, IF PACKED IN A SINGLE CONTAINER, SUCH CONTAINER SHALL BE COMPARTMENTED SO THAT REMOVAL OF THE BODY SHALL NOT DISTURB THE INTEGRITY OF THE PACKING OF THE OTHER COMPONENTS.

C. BODY BONNET BLANK. A TEMPORARY TOP BODY CLOSURE SHALL BE SUPPLIED BY THE MANUFACTURER. THIS BONNET BLANK SHALL BE OF THE SAME MATERIAL AS THE BONNET, WITH VALVE MODEL NUMBER FOR IDENTIFICATION, AND SHALL SEAL THE VALVE WITHOUT LEAKAGE DURING FIELD CLEANING AND PRESSURE TESTING OF THE INSTALLED BODY AT FULL RATED HYDROSTATIC AND PNEUMATIC TESTING PRESSURES. THE BONNET BLANK SHALL HAVE A 1/2 INCH FNPT PLUGGED CONNECTION AT THE OUTER EDGE FOR HIGH POINT VENTING.

SYM	ZONE	DESCRIPTION	DATE	APPROVED
		REFER TO SHEET NO. 1		

REVISIONS

SIGNATURE	DATE
DRAWN	
CHECKED	
ENGINEER	
ISSUED	
SUBMITTED	
NASA SAFETY	
APPROVED	
USED ON 54000-D001	

NATIONAL AERONAUTICS AND SPACE ADMINISTRATION

JOHN C. STENNIS SPACE CENTER SSC, MS 39529-6000

PACKAGING & IDENTIFICATION VALVES & COMPONENTS

SIZE B | DWG. NO. 54000-GP01 | REV. 5

AUTHORITY | SHEET 2 OF 4

CADD CONTROLLED DRAWING
CADD P/N: SCD.54000-GP01REV5

D. WELDING PROCEDURE. WITH EACH VALVE BODY PACKAGE TWO COPIES OF WELDING PROCEDURES FOR SATISFACTORY INSTALLATION OF THE VALVE WITHOUT DISTORTION SHALL BE INCLUDED.

4. IDENTIFICATION PLATE:

THE REQUIRED DATA SHALL BE AFFIXED IN SUCH A WAY THAT THE IDENTIFICATION WILL NOT BE OBLITERATED DURING CHEMICAL CLEANING AND WHILE IN SERVICE. THE MARKING OR IDENTIFICATION MAY BE PLACED ON A PLATE AND PERMANENTLY ATTACHED TO THE COMPONENT. ADHESIVE – TYPE PLATES SHALL NOT BE USED. WIRE AFFIXED METAL TAGS ARE ACCEPTABLE.

NOTES

1. IF THE MANUFACTURER DOES NOT RECOGNIZE ITS COMPONENTS BY SERIAL NO., A SERIAL NO. WILL BE ASSIGNED AND AFFIXED AT SSC AT SUCH TIME IT IS PROCESSED FOR USE.

REFER TO SHEET NO. 1

SYM	ZONE	DESCRIPTION	DATE	APPROVED

REVISIONS

SIGNATURE	DATE
DRAWN	
CHECKED	
ENGINEER	
ISSUED	
SUBMITTED	
NASA SAFETY	
APPROVED	
USED ON 54000–D001	

NATIONAL AERONAUTICS AND SPACE ADMINISTRATION

JOHN C. STENNIS SPACE CENTER
SSC, MS 39529–6000

PACKAGING & IDENTIFICATION
VALVES & COMPONENTS

SIZE B | DWG. NO. 54000–GP01 | REV. 5

AUTHORITY | SHEET 4 OF 4

CADD CONTROLLED DRAWING
CADD P/N:
SCD.54000–GP01REV5

National Aeronautics and Space Administration
John C. Stennis Space Center
Stennis Space Center, MS 39529-6000

CONTRACTOR TRANSMITTAL SHEET

DATE

SHEET OF

SECTION I - REQUEST FOR APPROVAL *(To be Initiated by the Contractor)*

TRANSMITTAL OF SHOP DRAWINGS, EQUIPMENT DATA, MATERIAL SAMPLES, OR MANUFACTURER'S CERTIFICATES OF COMPLIANCE
(See Instructions on Reverse)

CONTRACT NO.

☐ NEW SUBMITTAL
☐ RESUBMITTAL

TO	FROM	PREVIOUS TRANSMITTAL NO. *(If Any)*	TRANSMITTAL NO.

SPECIFICATION AND SECTION NO. *(Cover Only One Section With Each Transmittal)*	PROJECT TITLE AND LOCATION

ITEM NO. (a)	DESCRIPTION OF ITEM SUBMITTED (Type, Size, Model Number, ect.) (See Instruction No. 3) (b)	MANUFACTURER OF ITEM *(See Instruction No. 8)* (c)	NO. OF COPIES (d)	CONTRACT REFERENCE DOCUMENT		VARIATION (See Instruction No. 6) (g)	ACTION CODE *(See Instruction No. 9)* (h)
				SPECIFICATION PARAGRAPH NO. (e)	DRAWING SHEET NO. (f)		

REMARKS

I certify that the above submitted items have been reviewed in detail and are correct and in strict conformance with the contract drawings and specifications, except as stated.

NAME AND SIGNATURE OF CONTRACTOR

SECTION II - APPROVAL ACTION

ENCLOSURES RETURNED *(List by Item No.)*	NAME, TITLE, AND SIGNATURE OF APPROVING AUTHORITY	DATE

INSTRUCTIONS

1. Section I will be initiated by the Contractor in the required number of copies.
2. Each transmittal shall be numbered consecutively in the space provided for "Transmittal No." This number, in addition to the contract number, will form a serial number for identifying each submittal. For new submittals or resubmittals mark the appropriate box; on resubmittals, insert transmittal number of last submission as well as the new submittal number.
3. Only one item should be described on each line.
4. Submittals requiring expeditious handling will be submitted on a separate form.
5. Separate transmittal form will be used for Shop Drawings submitted under separate sections of the specifications.
6. A check shall be placed in the "Variation" column when a submittal is not in accordance with the plans and specifications - also, a written statement to that effect shall be included in the space provided for "Remarks."
7. Form is self-transmittal; letter of transmittal is not required.
8. Provide manufacturer's name and when a sample of material of Manufacturer's Certificate of Compliance is transmitted, indicate "Sample" or "Certificate" in Column (b), Section I, along with description.
9. The National Aeronautics and Space Administration Project Manager will assign action codes as indicated below in space provided in Section I, Column (h), to each item submitted. In addition, the Project Manager will ensure that enclosures are indicated and attached to the form prior to return to the contractor.

THE FOLLOWING ACTION CODES ARE GIVEN TO ITEMS SUBMITTED

A—Approved as submitted.

B—Approved, except as noted on drawings. Resubmission not required.

C—Approved, except as noted on drawings. Refer to attached sheet, resubmission required.

D—Will be returned by separate correspondence.

E—Disapproved (see attached).

F—Receipt acknowledged.

G—Other (specify).

10. Approval of items does not relieve the contractor from complying with all the requirements of the contract plans and specifications.