NOTES: UNLESS OTHERWISE SPECIFIED

1. Specifications of Actuator
   - Voltage 28 +/- 2V
   - Max current 1.2 A
   - Number of phases 2
   - Number of poles 6
   - Min Torque provided 20 in-lbs
   - Number of life cycles of motor see SPICE Motor Performance Specifications 2190483
   - Output shaft material 13-8 St-ST H-950
   - Lubrication DRY LUBE
   - Gear ratio 200
   - Motor Mass 6.5 oz
   - Operational Temp range -40 to 70C
   - DCR at 50 C 135 ohms
   - DCR at 25 C 120 Ohms
   - Kt (motor) = 11.6 in-oz/amp
   - Km (motor @25) 1.0 oz-in/W^-2
   - Nominal Efficiency of Gear head 0.85

2. BAG PART PER MIL-STD-2073-1E, METHOD 10, AND TAG WITH PART NUMBER.

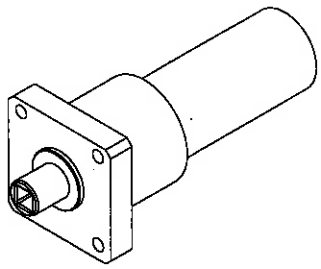

ISOMETRIC VIEW
FOR REFERENCE ONLY

SPICE DA - RELEASED -
DATE# 4\4\2013
REVISION BY EO ONLY

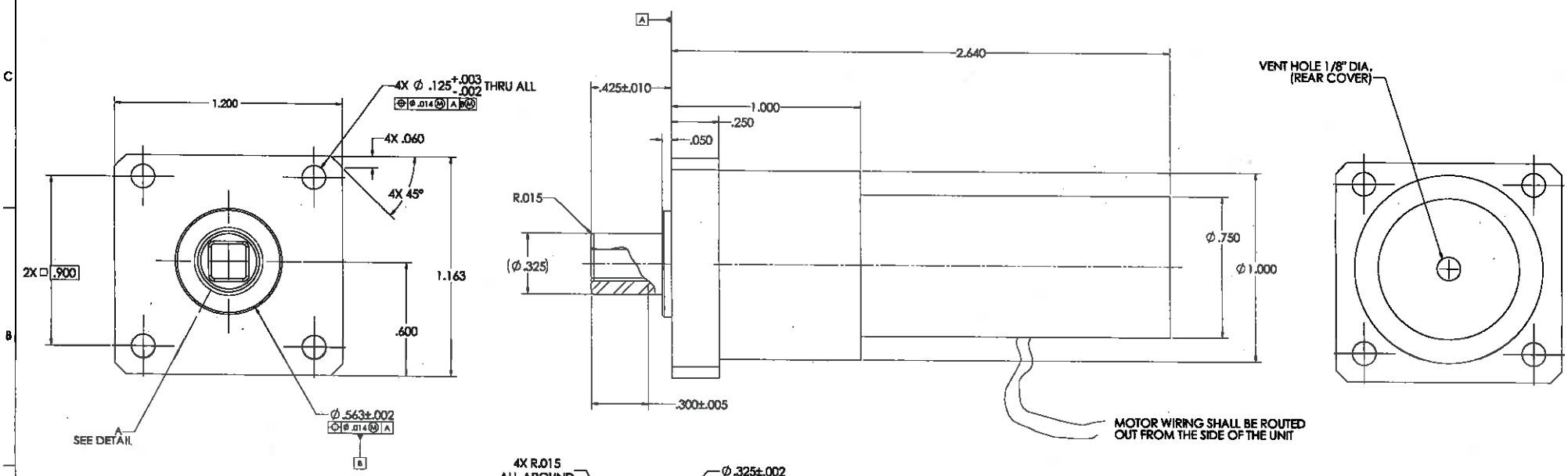

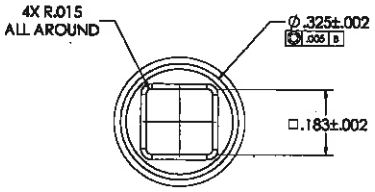

DETAIL A
SCALE 6 : 1

SOURCE CONTROL DRAWING

ITEM NO	REQ	REQ	PART NO.	DESCRIPTION	MATERIAL	MAT'L SPEC OR CAGE CODE
1	1		2187127	MOTOR, DRIVE & GEAR ASSEMBLY		

LIST OF MATERIAL

INCH	X	
HYBRID METRIC/INCH		
METRIC		

TOLERANCES FOR INCH: .XX ±.01, .XXX ±.005, .XXX ±1/16, ±.5°

TOLERANCES FOR METRIC: .XX ±0.12, .XX ±0.1, .X ±0.2, ±0.5°, .XX ±0.3, .XXX ±0.8, .XX ±1.5

NEXT ASSY	USED ON
2187127	SPICE

Goddard Space Flight Center

NAME	INIT.	DATE
A. ROSANOVA		
J.CANIWELL		
A. ROSANOVA		
B. HOHL		
P. JORDAN		

MOTOR
DETECTOR DOOR FM
SPICE

D 36FC1 2187127 A

SCALE: 2:1 SHEET: 1 OF 1

ITAR RESTRICTED DATA
U.S. Citizens / US Permanent Residents (Green Card Holders) Only
The unclassified technical information included herein is controlled under the ITAR, 22 CFR 120-130, by the U.S. Department of State. Transfer of this information to a foreign person or entity requires an export license issued by the U.S. Department of State or an ITAR exemption to the license requirement prior to the export or transfer.

Performance Specification
SPICE Door Mechanism
Actuator Unit

SPICE-Actuator- Document # 2190483

Revision (-)

Release Date: 3/4/2013

Prepared by: Patrick Jordan/544

on

Goddard Space Flight Center
Greenbelt, Maryland

Check the SPICE Project to verify that this is the correct version prior to use.

Performance Specification
SPICE Actuator Unit

DOCUMENT CHANGE RECORD

Sheet: 1 of 1

REV/ VER LEVEL	DESCRIPTION OF CHANGE	APPROVED BY	DATE APPROVED
Rev (-)	Released per	TBD	TBD

Document Control Information

This document is controlled by the SPICE Project. Changes require the approval of the SPICE Project Manager. Submit proposed changes to the SPICE Project Configuration Management Office. This document will be revised per SPICE Configuration Management Plan".

Review/Approval Page

Table of Contents

1 Introduction 7
1.1 Scope 7
2 Definitions 7
2.1 Maximum Internal Friction Torque ($T_{F\ int\ max}$) 7
2.2 Motor Torque 7
2.3 Torque Ripple 7
2.4 Motor Constant, Km 7
2.5 Torque Constant, Kt 7
2.6 Actuator Unit 7
2.7 Engineering Test Unit (ETU) 8
2.8 Qualification Unit 8
2.9 Flight Unit 8
2.10 Acceptance 8
2.11 Qualification 8
2.12 Life Test 8
2.13 Component 8
2.14 Unit 8
2.15 Assembly 9
2.16 Part 9
2.17 Instrument 9
2.18 Survival Temperature 9
2.19 Hot/Cold Start 9
3 Requirements 9
3.1 Description 9
3.2 Physical Characteristics 9
3.2.1 Mass 10
3.2.2 Dimensions 10
3.2.3 Harness Wires 10
3.2.4 Wiring Configuration 10
3.2.5 Materials and Finish 10
3.2.6 Lubrication 10
3.2.7 Cleanliness 11
3.2.8 External Leakage 11
3.2.9 Identification and Marking 11
3.2.10 Provision for Attachments 11
3.2.11 Hall Effect Sensors 11
3.3 Mechanical Characteristics 11
3.3.1 Stalled Condition 11
3.3.2 Motor Torque Ripple 11
3.3.3 Reduction Gear Ratio 11
3.3.4 Actuator Rotation Profile 11

3.4 Electrical Characteristics and Performance 12
3.4.1 Motor Voltage 12
3.4.2 Motor Torque 12
3.4.3 Motor Type 12
3.4.4 Motor Constant 12
3.4.5 Torque Constant 12
3.4.6 Electrical Time Constant 12
3.4.7 Dielectric Strength 12
3.4.8 Insulation Resistance 12
3.4.9 Degaussing 12
3.4.10 Motor Winding DC Resistance 12
3.5 Position Knowledge 13
3.5.1 N/A 13
3.6 Life Requirements 13
3.6.1 Duty Cycle 13
3.6.2 Mission Life 13
3.6.3 Shelf Life 13
3.7 Environmental Requirements 13
3.7.1 Static Loads ..... **Error! Bookmark not defined.**
3.7.2 Dynamic 13
3.7.3 Shock 15
3.7.4 Acoustic 15
3.7.5 Thermal 16
3.7.6 Vacuum 16
3.7.7 Atomic Oxygen 16
3.7.8 Radiation – Total Dose-N/A 16
3.7.9 Humidity 16
3.7.10 Venting 17
3.7.11 Fatigue 17
3.8 Analysis Requirements 17
3.8.1 Stress 17
3.8.2 Fatigue 17
3.8.3 Wear 17
3.8.4 Lubrication 17
3.9 Testing 17
4 Verification 18
4.1 Inspection 18
4.1.1 Visual Inspection 18
4.1.2 Physical Measurement 18
4.1.3 Documentation Search 18
4.2 Analysis 18
4.3 Test 18
4.3.1 Acceptance Test 18
4.3.2 Test Failures 19
4.4 Required Verification Methods 19

5 Referenced Documents 20
5.1 Government Documents 20

Tables

Table 2 Stalled Test Period ..... **Error! Bookmark not defined.**
Table 3: Random Vibration 14
Table 6 Temperature Limits as measured at Flanges 16

1 Introduction

1.1 Scope

This specification describes the electrical, mechanical, operating environment, and verification testing requirements for SPICE Detector Assembly (DA) Actuator component. The actuator shall be used in the DA Engineering Test Unit (ETU) or Flight Unit (FU). The SPICE DA assembly is being developed by the National Aeronautics and Space Administration (NASA) and will be delivered to the SPICE instrument. The Actuator Unit shall implement general spacecraft requirements that cover a rotary actuator unique to the DA Door Mechanism Sub Assembly.

2 Definitions

2.1 Maximum Internal Friction Torque ($T_{F\ int\ max}$)

The internal friction that the motor must overcome to move the output with no load on the output shaft at the beginning of life (BOL).

2.2 Motor Torque

Torque available at the motor rotor with optimal sinusoidal commutation at a specific rms current. See Drawing 2187127 for requirement.

2.3 Torque Ripple

A variation in torque that is usually expressed in percent of total torque.

2.4 Motor Constant, Km

This is a constant that describes the motor efficiency. Units can be Newton-meters / sqrt (watt) or ounce-inches / sqrt (watt). See Drawing 2187127 for requirement.

2.5 Torque Constant, Kt

This is a constant that describes the relationship between current and torque. Units can be Newton-meters / amp or ounce-inches / amp. See Drawing 2187127 for requirement.

2.6 Actuator Unit

Also referred to simply as "actuator," this is the harness, output flange, mounting flanges, motor, gearbox, bearings, mechanical interfaces, and output shaft as described in drawing 2187127 and in this document..

2.7 Engineering Test Unit (ETU)

Non-flight hardware that simulates flight hardware in form, fit and function for a specific test. The ETU is not required to have flight-like certification, and it will not be used for flight.

2.8 Qualification Unit

Unit used to qualify a flight design. See prototype and protoflight component definitions.

2.9 Flight Unit

Flight Unit is hardware that will be used operationally in space. It includes the following subsets:

2.10 Acceptance

The verification process that justifies that a Certificate of Compliance can be issued that certifies that the Actuator meets the specified requirements.

2.11 Qualification

The verification process that demonstrates that a design (not each individual flight unit) will function properly under conditions more severe than it will experience in orbit. It also serves as a quality control screen to detect deficiencies. Qualification tests are performed to limit level with a qualification test factor.

2.12 Life Test

A test to demonstrate that a component or subsystem will operate within design specifications while subject to the predicted use. This includes all pre-flight qualification testing, launch conditions, and on-orbit operation and environment. The test article must perform without failure for a minimum of 4.0 times the expected number of operations or cycles expected.

2.13 Component

A functional subdivision of a subsystem and generally a self-contained combination of items performing a function necessary for the subsystem's operation. Examples are electronic box, transmitter, gyro package, actuator, motor, battery. For the purposes of this document, component" and "unit" are used interchangeably.

2.14 Unit

A functional subdivision of a subsystem, or instrument, and generally a self contained combination of items performing a function necessary for the subsystem's operation. Examples are electronic box, transmitter, gyro package, actuator, motor, battery. For the purposes of this document, "component" and "unit" are used interchangeably.

2.15 Assembly

A functional subdivision of a component consisting of parts or subassemblies that perform functions necessary for the operation of the component as a whole. Examples are a power amplifier and gyroscope.

2.16 Part

A hardware element that is not normally subject to further subdivision or disassembly without destruction of design use. Examples include resistor, integrated circuit, relay, connector, bolt, and gaskets.

2.17 Instrument

A spacecraft subsystem consisting of sensors and associated hardware for making measurements or observations in space. For the purposes of this document, an instrument is considered a subsystem (of the spacecraft).

2.18 Survival Temperature

A non-operational temperature at which the unit must dwell to verify its ability to withstand this temperature extreme without causing damage. See Drawing 2187127 for requirement.

2.19 Hot/Cold Start

The powering on and driving of an actuator at a given temperature extreme (after dwelling at that temperature). The actuator is not required to meet the performance specifications at this temperature and exposure to this temperature must cause no permanent damage to the unit. See Drawing 2187127 for requirement.

3 Requirements

All of the written requirements in this document shall apply at the end of spacecraft (SC) life (EOL), which will occur no earlier than 5 years post launch (If Launch=2015, then EOL=2015+5=2020) except as otherwise noted.

3.1 Description

The Actuator Unit shall have two-phase stepper DC motor a two-stage speed reducer gear-head, and a load-carrying output shaft. See Drawing 2187127.

3.2 Physical Characteristics

Detailed envelope and interface drawings (mechanical and electrical) shall be supplied to the government. All Contractor drawings prepared for this unit shall conform to the requirements of MIL-DTL-31000B. The ICD shall include specific information regarding all of the following parameters:

3.2.1 Mass

Total as delivered, each actuator mass shall be less than or equal to requirement in drawing 2187127. The Contractor shall also indicate the mass and the approximate center of mass on the ICD.

3.2.2 Dimensions

Interface locations and physical envelope should be within the ranges specified in attached drawing 2187127. Contractor ICD shall include specific details and dimensions including but not limited to

- Size, location and tolerance of mounting holes
- Flange thickness
- Shaft diameter and length
- Reference surfaces
- Overall physical envelope
- Variations from the dimensions shown in GSFC Drawing 2187127

3.2.3 Harness Wires

The wire from the DC motor shall be of the M22759/11 Teflon insulated type, sized according to the derating schedule found in EEE-INST-002. The actuator shall use 24 or 26 gage wires. Lead lengths of all wires shall be no less than 23 inches. The harness will need to have a strain relief.

3.2.4 Wiring Configuration

Motor power wires to be twisted.

3.2.5 Materials and Finish

All materials and processes shall be in accordance with spaceflight standards and approved by the Government. External surfaces shall be conductive. Aluminum parts shall be finished with iridite per MIL-C-5541, Class 3. Titanium surfaces shall be finished per AMS 2488 and conductive surfaces identified in the design shall be masked. The outgassing requirements are <1% TML and less than 0.1% CVCM when tested in accordance with ASTM E-595. All materials and processes will be selected in accordance with MSFC-3029 and MIL-STD-889 to mitigate stress corrosion cracking and interactions between dissimilar metals. Pure cadmium, zinc, beryllium, magnesium, and tin are prohibited and all tin should have a minimum of 3% lead alloy. The output shaft shall be made of Stainless Steel PH 13-8 unless unproved by GSFC engineer.

3.2.6 Lubrication

The motor actuator shall provide sufficient lubricant to moving parts. The lubrication shall be per 2187127.

3.2.7 Cleanliness

The assembly and integration shall be performed in a class 100 environment. The test operations should be performed in a clean, dust-controlled environment such that performance is not compromised. The units shall be inspected after test and re-cleaned if necessary. Delivered in 400A/2 per condition per
Mil-STD-1246.

3.2.8 External Leakage

There shall be no external leakage of lubricant or particles.

3.2.9 Identification and Marking

Each unit shall be permanently marked with the part number and a unique sequential serial number in the area designated on the drawing, 2187127 in a manner to be approved by the Government. All ink used for identification and marking shall be low out-gassing.

3.2.10 Provision for Attachments

The housing surface shall have no ribs or protrusions that would prevent the attachment of circumferential heaters.

3.2.11 Hall Effect Sensors

N/A

3.3 Mechanical Characteristics

Actuator assemblies shall have the following physical and nominal performance characteristics, except as otherwise noted.

3.3.1 Stalled Condition

The motor shall be capable of being continuously driven in a locked rotor condition (stalled) without permanent degradation

3.3.2 Motor Torque Ripple

The motor torque ripple shall be less than 14%.

3.3.3 Reduction Gear Ratio

The reduction gear ratio shall have a reduction ratio and gear efficiency shall be per drawing 2187127.

3.3.4 Actuator Rotation Profile

The actuator shall be operated such that the output shaft, beginning from home and rotates 50 times to end of travel, then rotating back 50 cycles to home, thus being one cycle of operation.

3.3.4.1 Inertial Load

The inertia load on the output shall be less 9E-6 oz-in-s^2.

3.3.4.2 Motor Frictional Load

Motor Coulomb friction shall be less than 0.25 oz-in including motor detent.

3.4 Electrical Characteristics and Performance

3.4.1 Motor Voltage

The motor shall be designed for a maximum supplied voltage per Drawing 2187127.

3.4.2 Motor Torque

The motor shall be designed to produce requirements per Drawing 2187127 .

3.4.3 Motor Type

The motor shall be a 2 phase Stepper DC motor. See Drawing 2187127 .

3.4.4 Motor Constant

The motor constant shall be a reference number only. See Drawing 2187127 .

3.4.5 Torque Constant

The motor torque constant shall be per Drawing 2187127.

3.4.6 Electrical Time Constant

The electrical time constant shall be less than **0.18 milliseconds.**

3.4.7 Dielectric Strength

Dielectric material between mutually isolated electrical circuits shall withstand a test voltage of at least 500 VAC for 15 seconds without exceeding a current of 0.40 ma.

3.4.8 Insulation Resistance

Insulation resistance between mutually isolated electrical circuits shall be at least 100 megaohms at a test voltage of at least 500 Vdc for 60 seconds minimum.

3.4.9 Degaussing

The Motor shall be assembled on an instrument that will be degaussed. The motor shall be capable of being degaussed to levels per ECSS-E-ST-20-07C-Rev.1 section 5.4.4 without permanent degradation.

3.4.10 Motor Winding DC Resistance

The DCR shall be per Drawing 2187127.

3.5 Position Knowledge

3.5.1 N/A

3.6 Life Requirements

3.6.1 Duty Cycle

The actuator shall accommodate a duty cycle consisting 110 cycles over two year (this includes the 4 times safety margin from section 2.12). One cycle shall require the actuator to be rotational 20 times clockwise and rotations 20 times counter clockwise. The duty cycle is not a continues use.

3.6.2 Mission Life

Mission life shall be five years as defined in section 3.0.

3.6.3 Shelf Life

Shelf life shall be Five years when packaged using agreed-to procedures.

3.7 Environmental Requirements

The actuators shall be designed to meet all of the performance and other design requirements of this specification.

3.7.1 Dynamic

The actuator shall be capable of withstanding the random vibration levels shown in Tables 3. The random vibration spectrum for SPICE instruments and components is specified as per the SPICE Detector Assembly Requirements Specification. This spectra shall be applied in each of the two perpendicular axes, one of which is longitudinal (along the motor shaft axis) and the second is the off axis.

Table 3: Random Vibration Levels for SPICE Instruments and Components

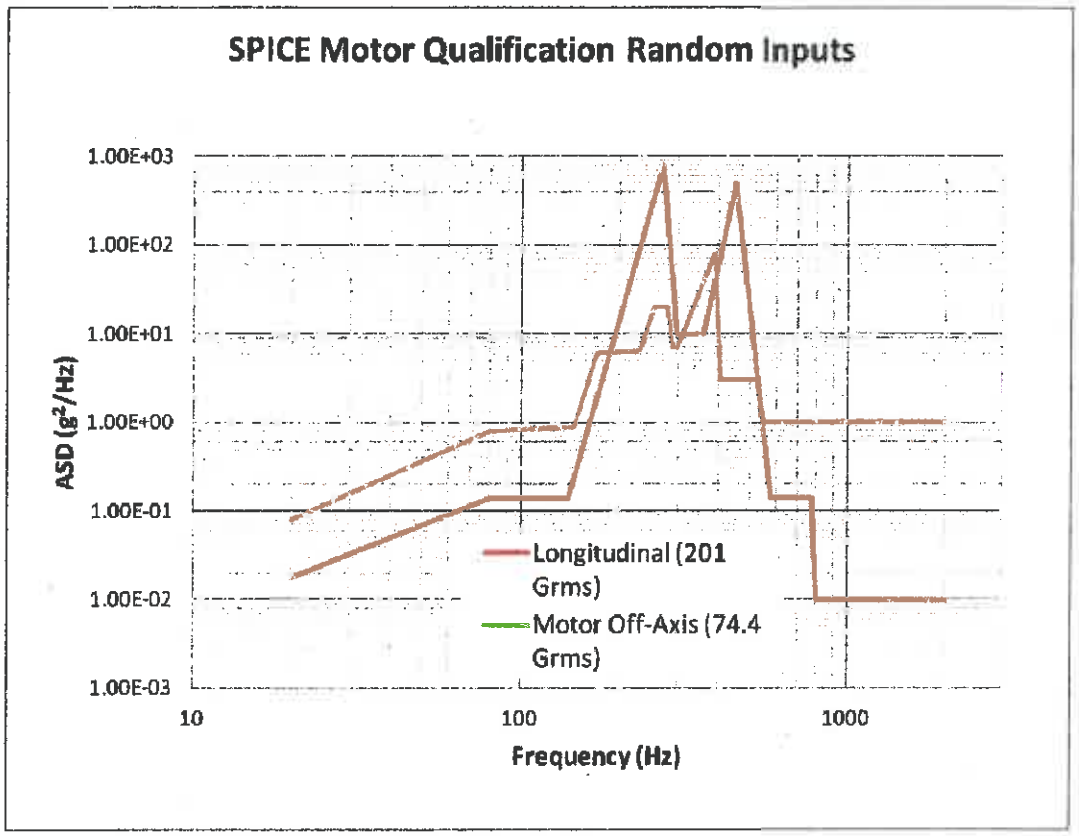

Motor Off-Axis (74.4 Grms)

Freq (Hz)	PSD (g^2/Hz)
2.00E+01	0.08
8.00E+01	0.80
1.45E+02	0.90
1.70E+02	6.00
2.30E+02	6.50
2.55E+02	20.00
2.80E+02	20.00
2.90E+02	7.00
3.00E+02	7.00
3.90E+02	80.00
4.05E+02	3.00
5.20E+02	3.00
5.50E+02	1.00
2.00E+03	1.00

Motor Longitudinal (201 Grms)

Freq (Hz)	PSD (g^2/Hz)
2.00E+01	0.02
8.00E+01	0.14
1.40E+02	0.14
2.70E+02	800.00
3.00E+02	10.00
3.60E+02	10.00
4.50E+02	500.00
5.80E+02	0.14
7.80E+02	0.14
8.00E+02	0.01
2.00E+03	0.01

Table 3: Random Vibration

(2 Minutes/Axis for Qualification Testing and 1 Minute/Axis Acceptance Testing)

3.7.2 Shock

The SPICE Detector Assembly actuator, shall be designed and qualified to withstand without degradation the shock levels specified in the table below to be applied independently to each axis at the unit/structure interface.

Table 4: Shock Environment

Frequency	100 Hz	1500 Hz	10 kHz
Shock response spectrum (Q=10) at unit interface	70g (TBC)	2000g (TBC)	2000g (TBC)

3.7.3 Acoustic

The SPICE Detector Assembly actuator, shall be shown to comply with acoustic levels shown in Table 5.

Table 5: Acoustic Test Levels

Freq (Hz)	Flight Limit / Acceptance (dB)	Qualification SPL (dB)	Test Tolerance (dB)
31.5	130.1	133.1	-1/+3
63	131.4	134.4	-1/+3
125	136	139	-1/+3
250	134.8	137.8	-1/+3
500	132.6	135.6	-1/+3
1000	126.2	129.2	-1/+3
2000	121.4	124.4	-1/+3
4000	116.9	119.9	-1/+3
8000	112.4	115.4	-1/+3

OASPL	140.7	143.7	-1/+3

Note: Sound Pressure Reference Level = 2 x 10^{-5} Pa
Acceptance test level duration is 1 minute
Qualification test level duration is 2 minutes

3.7.4 Thermal

Actuators shall be capable of operation at temperatures defined in Table 6. The actuator shall be capable of meeting all requirements with a gradient of 25 °C between mounting and output flanges (output cold).

Table 6 Temperature Limits as measured at Flanges

Condition	Cold Limit (degrees C)	Hot Limit (degrees C)
Actuator Operational Temp	-40	+70
Actuator Acceptance Temp	-55	+70
Actuator Qualification Temp	-55	+70
Actuator Survival Qualification/Acceptance Test Temp	-60	+70
Actuator Contamination Bake Out Temp	-	+85

3.7.5 Vacuum

The actuator shall be capable of meeting all performance requirements of section 3.3 at ambient as well as when exposed to a vacuum environment of 1 x 10^{-5} Torr.

3.7.6 Atomic Oxygen

Materials used in the construction of the actuator assembly shall not generate contamination products resulting from the interaction with an atomic oxygen environment. All operational requirements shall be satisfied during exposure to an atomic oxygen environment of 300 km (180 mile) perigee of transfer orbit for two weeks.

3.7.7 Radiation – Total Dose-N/A

3.7.8 Humidity

The actuator shall be capable of meeting the requirements herein after and during exposure to 20 to 70% relative humidity prior to launch.

3.7.9 Venting

The actuator shall survive external depressurization from one atmosphere to 10^{-5} Torr in 30 seconds. The actuator shall be vented to minimize lubricant loss and prevent internal pressurization during external depressurization of one atmosphere to 10^{-5} Torr in 30 seconds.

3.7.10 Fatigue

a) The Design shall show positive margins for fatigue. The number of cycles shall consider 1) testing at the component level, assembly level, and 2) re-test following any re-work, 3) shipping and handling, 4) launch. Specifically, the solder leads on components shall be analyzed and shown to have positive margins with respect to fatigue.

b) The fatigue analysis shall have a scatter factor of 4 applied.

3.8 Analysis Requirements

3.8.1 Stress

The actuator shall demonstrate positive margins of safety on ultimate failure modes using a yield F.S. of 1.25 and ultimate F.S. of 1.40 on flight limit levels. All margins of safety shall be verified by a detailed hand stress analysis of the actuator that assesses all primary and secondary structure, joints, fasteners, bearings and gear loads.

3.8.2 Fatigue

Fatigue life of the actuator shall be designed to meet 95% reliability curves for the materials. The number of cycles to be used is per section 3.6 using a factor of two and a reference load on the gear-head per drawing 2187127.

3.8.3 Wear

The wear life of all sliding or rolling surfaces, including the gearbox teeth, and bearings, shall be demonstrated with a detailed analysis or by similarity using appropriate margins of safety. The reference load on the output bearings should be no more than the axial preload. Reference cycles are listed in 3.6.1.

3.8.4 Lubrication

The Contractor shall provide analysis to show that sufficient lubricant is available throughout the life of the actuator so that it can meet the specified performance and life requirements as defined in section 3.6.

3.9 Testing

The contractor shall design the actuator to meet the all requirements outlined in this specification. Testing shall be performed by GSFC.

4 Verification

The contractor shall verify that the hardware design is qualified and meets all requirements contained in this document. The contractor shall provide a verification matrix defining the method of verification for each specific requirement of this document. Verification methods include inspection, analysis, test or a combination of these techniques. Certain requirements shall have a specific type of verification as stated in Section 4.4.

4.1 Inspection

Verification by inspection includes visual inspection of the physical hardware, a physical measurement of a property of the hardware, or the documentation search demonstrating hardware of an identical design has demonstrated fulfillment of a requirement.

4.1.1 Visual Inspection

Visual inspection of the physical hardware by a customer appointed qualified inspector.

4.1.2 Physical Measurement

Physical measurement of hardware property (i.e. mass, dimensions, etc.) demonstrating the hardware meets specific requirement.

4.1.3 Documentation Search

Verification of requirements based on similarity shall include supporting rationale and documentation and shall be approved by the Government.

4.2 Analysis

Verification of performance or function through detailed analysis, using all applicable tools and techniques, is acceptable with the following conditions.

For structural loads, design qualification by analysis requires that positive margins of safety be shown using factors of safety of 2.0 on yield and 2.6 on ultimate. Government approval is required for verification by analysis..

4.3 Test

The Contractor is not required to perform Qualification Testing, unless it is necessary to justify issuance of the Certificate of Compliance. The Contractor is not required to perform Performance Testing.

4.3.1 Acceptance Test

The verification process that demonstrates that hardware meets the specified requirements so that a Certificate of Compliance can be justifiably issued.

4.3.2 Test Failures

The SPICE Program Representative shall be notified of any test failures within 24 hours of such occurrence. The test shall be completed to obtain as much information as possible. No replacement, adjustment, maintenance, or repairs are authorized during testing.

4.4 Required Verification Methods

The following requirements shall be verified using the verification methods specified. The methods are based on standard practices used for space flight hardware.

Requirement	Reference Paragraph	Verification Method	Comment
Mass	3.2.1	Inspection	Measurement
Worst Case Operating Conditions		Test	GSFC
Motor Torque Margin		Analysis	Vendor
Stall Condition	3.3.1	Test	GSFC
Thermal Vacuum	3.7.5, 3.7.6	Test	GSFC
Life	3.6.1, 3.7.5 and 3.7.6	Test	GSFC
Sine Sweep		Test	GSFC
Random Vibration	Table 3	Test	GSFC
Strength	3.7.1 and 4.2	Test or Analysis	Vendor
Dielectric strength	3.4.7	Test	Vendor
Insulation resistance	3.4.7	Test	Vendor
Cleanliness	3.2.7	Test	GSFC