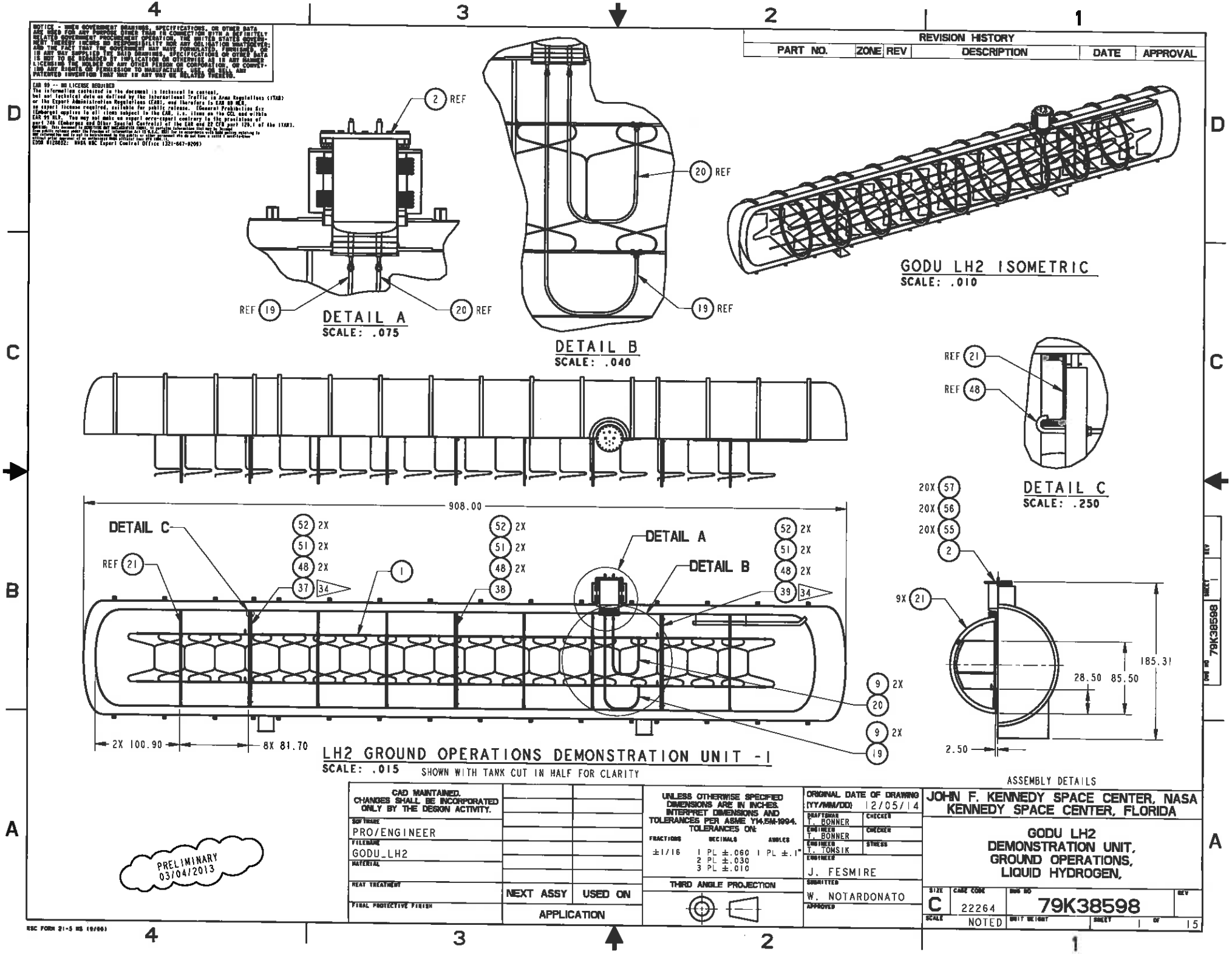

REVISION HISTORY
PART NO. | ZONE | REV | DESCRIPTION | DATE | APPROVAL
DETAIL A
SCALE: .075
DETAIL B
SCALE: .040
GODU LH2 ISOMETRIC
SCALE: .010
DETAIL C
SCALE: .250
LH2 GROUND OPERATIONS DEMONSTRATION UNIT -1
SCALE: .015
SHOWN WITH TANK CUT IN HALF FOR CLARITY
908.00
2X 100.90
8X 81.70
185.31
28.50
85.50
2.50
ASSEMBLY DETAILS
PRELIMINARY 03/04/2013
CAD MAINTAINED. CHANGES SHALL BE INCORPORATED ONLY BY THE DESIGN ACTIVITY.
SOFTWARE PRO/ENGINEER
FILENAME GODU_LH2
MATERIAL
HEAT TREATMENT
FINAL PROTECTIVE FINISH
NEXT ASSY | USED ON
APPLICATION
UNLESS OTHERWISE SPECIFIED DIMENSIONS ARE IN INCHES. INTERPRET DIMENSIONS AND TOLERANCES PER ASME Y14.5M-1994. TOLERANCES ON:
FRACTIONS ±1/16
DECIMALS 1 PL ±.060 2 PL ±.030 3 PL ±.010
ANGLES 1 PL ±.1°
THIRD ANGLE PROJECTION
ORIGINAL DATE OF DRAWING (YY/MM/DD) 12/05/14
DRAFTSMAN T. BONNER
ENGINEER T. BONNER
ENGINEER T. TOMSIK
ENGINEER J. FESMIRE
SUBMITTED W. NOTARDONATO
APPROVED
JOHN F. KENNEDY SPACE CENTER, NASA
KENNEDY SPACE CENTER, FLORIDA
GODU LH2
DEMONSTRATION UNIT,
GROUND OPERATIONS,
LIQUID HYDROGEN,
SIZE C
CAGE CODE 22264
DWG NO 79K38598
SCALE NOTED
SHEET 1 OF 15

NOTICE - WHEN GOVERNMENT DRAWINGS, SPECIFICATIONS, OR OTHER DATA ARE USED FOR ANY PURPOSE OTHER THAN IN CONNECTION WITH A DEFINITELY RELATED GOVERNMENT PROCUREMENT OPERATION, THE UNITED STATES GOVERNMENT THEREBY INCURS NO RESPONSIBILITY NOR ANY OBLIGATION WHATSOEVER; AND THE FACT THAT THE GOVERNMENT MAY HAVE FORMULATED, FURNISHED, OR IN ANY WAY SUPPLIED THE SAID DRAWINGS, SPECIFICATIONS, OR OTHER DATA IS NOT TO BE REGARDED BY IMPLICATION OR OTHERWISE AS IN ANY MANNER LICENSING THE HOLDER OF ANY OTHER PERSON OR CORPORATION, OR CONVEYING ANY RIGHTS OR PERMISSION TO MANUFACTURE, USE, OR SELL ANY PATENTED INVENTION THAT MAY IN ANY WAY BE RELATED THERETO.

REVISION HISTORY					
PART NO.	ZONE	REV	DESCRIPTION	DATE	APPROVAL

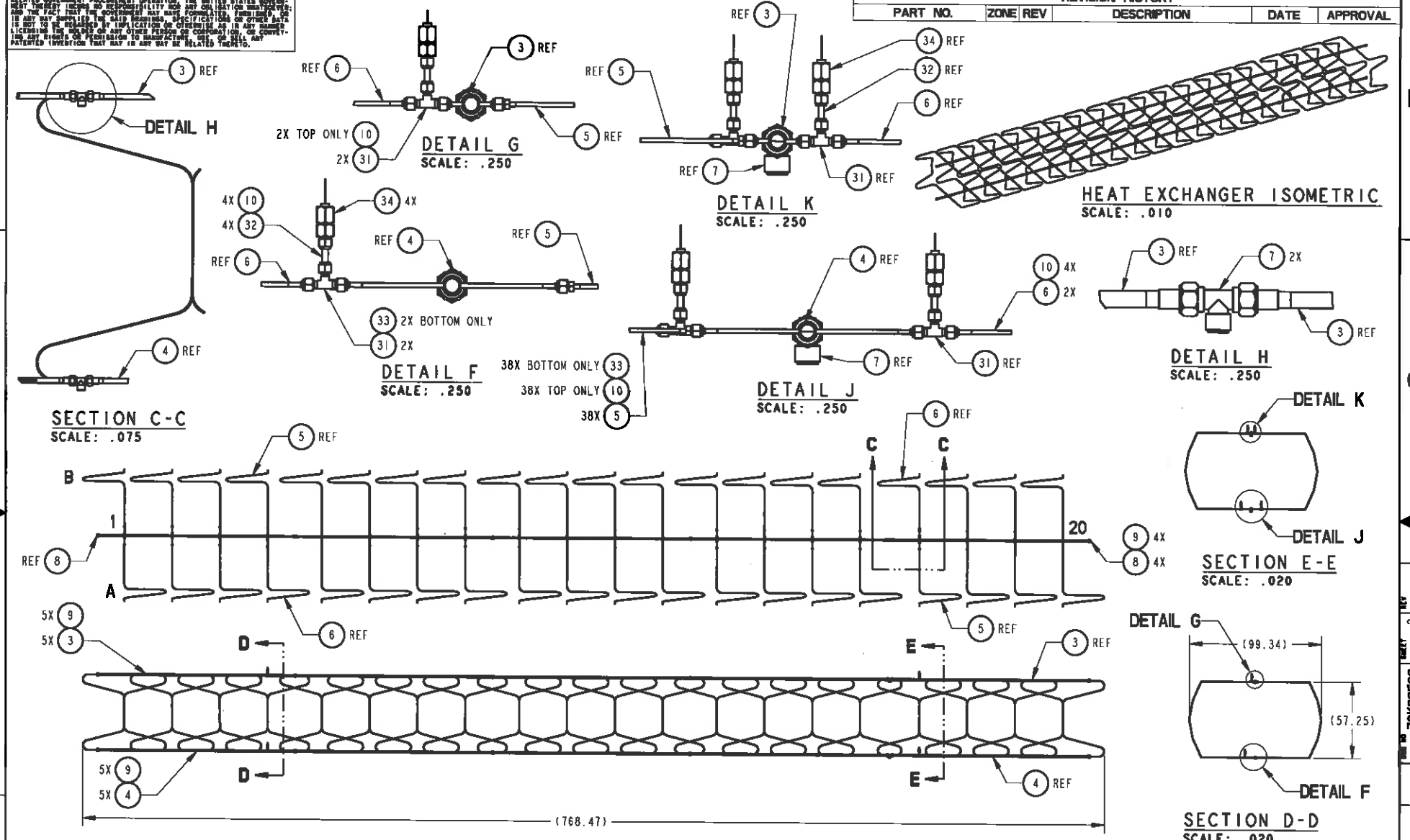

(1) HEAT EXCHANGER -2
SCALE: .020

PRELIMINARY 03/04/2013

CAD MAINTAINED. CHANGES SHALL BE INCORPORATED ONLY BY THE DESIGN ACTIVITY.		
SOFTWARE: PRO/ENGINEER		
FILENAME: GODU_LH2		
MATERIAL		
HEAT TREATMENT	NEXT ASSY	USED ON
FINAL PROTECTIVE FINISH	APPLICATION	

UNLESS OTHERWISE SPECIFIED DIMENSIONS ARE IN INCHES. INTERPRET DIMENSIONS AND TOLERANCES PER ASME Y14.5M-1994. TOLERANCES ON:

FRACTIONS	DECIMALS	ANGLES
±1/16	1 PL ±.060 2 PL ±.030 3 PL ±.010	PL ±.1°

THIRD ANGLE PROJECTION

ORIGINAL DATE OF DRAWING (YY/MM/DD)	12/05/14
DRAFTSMAN T. BONNER	CHECKER
ENGINEER T. BONNER	CHECKER
ENGINEER T. TOMSIK	STRESS
ENGINEER J. FESMIRE	
SUBMITTED W. NOTARDONATO	
APPROVED	

ASSEMBLY DETAILS

JOHN F. KENNEDY SPACE CENTER, NASA
KENNEDY SPACE CENTER, FLORIDA

GODU LH2
DEMONSTRATION UNIT,
GROUND OPERATIONS,
LIQUID HYDROGEN,

SIZE	CAGE CODE	DWG NO	REV
C	22264	79K38598	
SCALE NOTED		UNIT WEIGHT	SHEET 2 OF

DWG NO 79K38598 SHEET 2 REV

KSC FORM 21-5 (5 10/00)

NOTICE - WHEN GOVERNMENT DRAWINGS, SPECIFICATIONS, OR OTHER DATA ARE USED FOR ANY PURPOSE OTHER THAN IN CONNECTION WITH A DEFINITELY RELATED GOVERNMENT PROCUREMENT OPERATION, THE UNITED STATES GOVERNMENT THEREBY INCURS NO RESPONSIBILITY NOR ANY OBLIGATION WHATSOEVER; AND THE FACT THAT THE GOVERNMENT MAY HAVE FORMULATED, FURNISHED, OR IN ANY WAY SUPPLIED THE SAID DRAWINGS, SPECIFICATIONS OR OTHER DATA IS NOT TO BE REGARDED BY IMPLICATION OR OTHERWISE AS IN ANY MANNER LICENSING THE HOLDER OR ANY OTHER PERSON OR CORPORATION, OR CONVEYING ANY RIGHTS OR PERMISSION TO MANUFACTURE, USE, OR SELL ANY PATENTED INVENTION THAT MAY IN ANY WAY BE RELATED THERETO.

REVISION HISTORY					
PART NO.	ZONE	REV	DESCRIPTION	DATE	APPROVAL

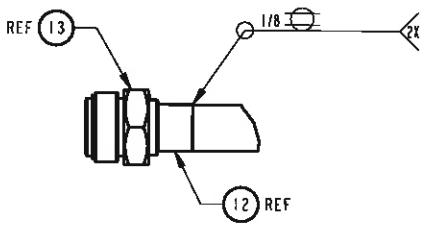

DETAIL L
SCALE: .500

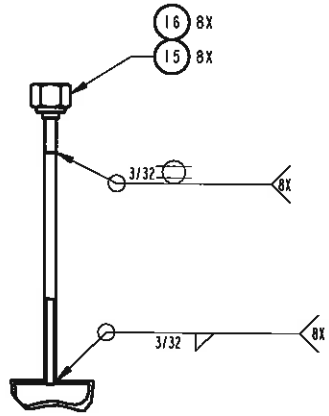

DETAIL M
SCALE: .500

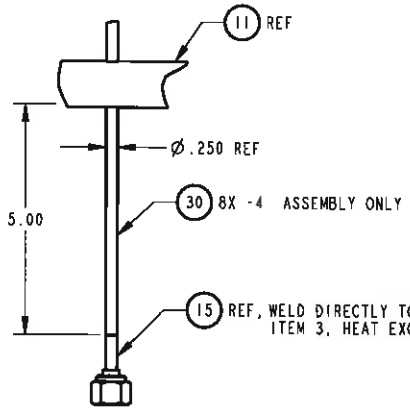

DETAIL N
SCALE: .500

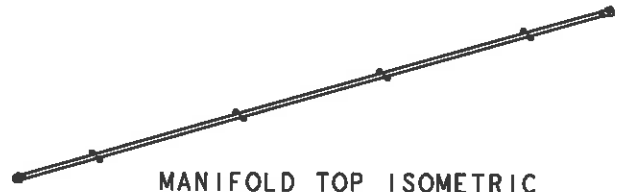

MANIFOLD TOP ISOMETRIC
SCALE: .050

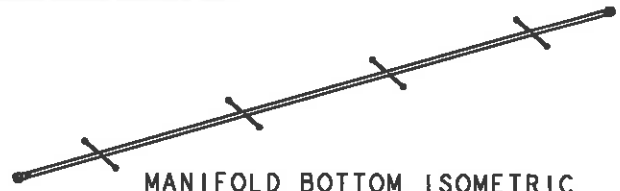

MANIFOLD BOTTOM ISOMETRIC
SCALE: .050

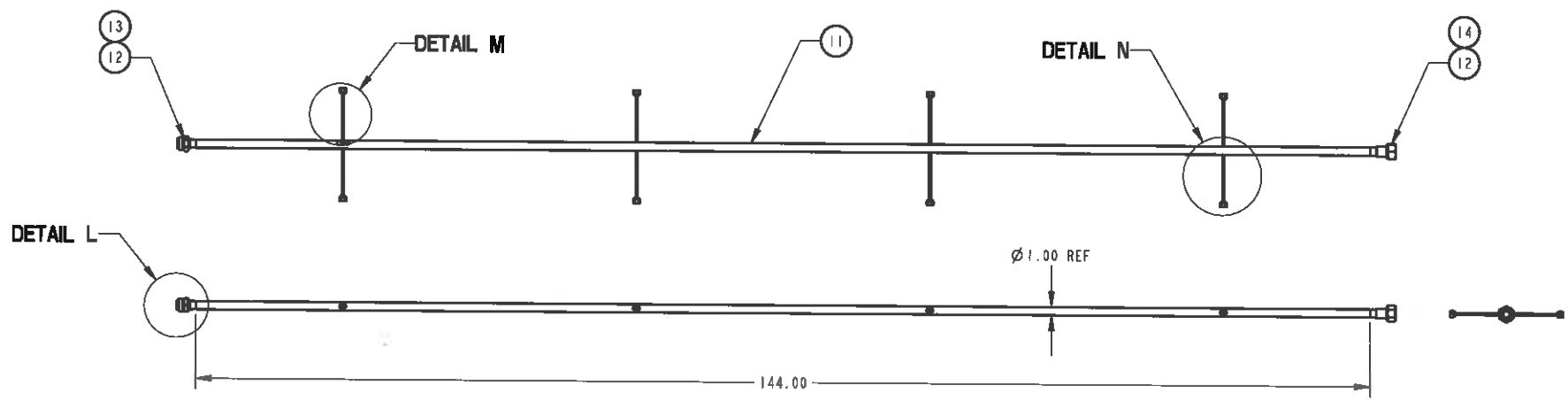

NOTED (3) HEAT EXCHANGER HEADER MANIFOLD TOP -3
SCALE: NTS

SHOWN (4) HEAT EXCHANGER HEADER MANIFOLD BOTTOM -4
SCALE: NTS

PRELIMINARY
03/04/2013

CAD MAINTAINED. CHANGES SHALL BE INCORPORATED ONLY BY THE DESIGN ACTIVITY.

SOFTWARE: PRO/ENGINEER
FILENAME: GODU_LH2
MATERIAL:
HEAT TREATMENT:
FINAL PROTECTIVE FINISH:

NEXT ASSY	USED ON
APPLICATION	

UNLESS OTHERWISE SPECIFIED DIMENSIONS ARE IN INCHES. INTERPRET DIMENSIONS AND TOLERANCES PER ASME Y14.5M-1994. TOLERANCES ON:

FRACTIONS	DECIMALS	ANGLES
±1/16	1 PL ±.060 2 PL ±.030 3 PL ±.010	1 PL ±.1°

THIRD ANGLE PROJECTION

ORIGINAL DATE OF DRAWING (YY/MM/DD) 12/05/14
DRAFTSMAN: T. BONNER — CHECKER:
ENGINEER: T. BONNER — CHECKER:
ENGINEER: T. TOMSIK — STRESS:
ENGINEER: J. FESMIRE
SUBMITTED: W. NOTARDONATO
APPROVED:

ASSEMBLY DETAILS

JOHN F. KENNEDY SPACE CENTER, NASA
KENNEDY SPACE CENTER, FLORIDA

GODU LH2
DEMONSTRATION UNIT,
GROUND OPERATIONS,
LIQUID HYDROGEN,

SIZE	CAGE CODE	DWG NO	REV
C	22264	79K38598	
SCALE: NOTED	UNIT WEIGHT	SHEET 3 OF	

DWG NO 79K38598 SHEET 3 REV

KSC FORM 21-5 KS (8/00)

NOTICE - THESE GOVERNMENT DRAWINGS, SPECIFICATIONS, OR OTHER DATA ARE BEING FOR ANY PURPOSE OTHER THAN IN CONNECTION WITH A DEFINITELY RELATED GOVERNMENT PROCUREMENT OPERATION, THE UNITED STATES GOVERNMENT THEREBY INCURS NO RESPONSIBILITY NOR ANY OBLIGATION WHATSOEVER; AND THE FACT THAT THE GOVERNMENT MAY HAVE FORMULATED, FURNISHED, OR IN ANY WAY SUPPLIED THE SAID DRAWINGS, SPECIFICATIONS OR OTHER DATA IS NOT TO BE REGARDED BY IMPLICATION OR OTHERWISE AS IN ANY MANNER LICENSING THE HOLDER OR ANY OTHER PERSON OR CORPORATION, OR CONVEYING ANY RIGHTS OR PERMISSION TO MANUFACTURE, USE, OR SELL ANY PATENTED INVENTION THAT MAY IN ANY WAY BE RELATED THERETO.

REVISION HISTORY					
PART NO.	ZONE	REV	DESCRIPTION	DATE	APPROVAL

SPECIFIC NOTES:

1. ITEM 18, TUBING 240 INCHES LONG WILL BE USED TO FABRICATE COOLING TUBES, ITEMS 5 & 6.
2. BEND COOLING TUBES, ITEMS 5 & 6 APROXIMATELY AS SHOWN.
3. BEND RADIUS' CAN RANGE BETWEEN 3 - 5 INCHES.

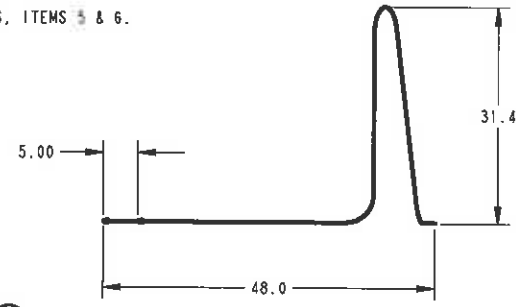

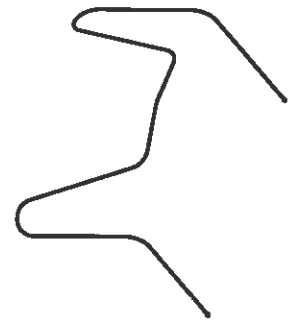

COOLING TUBE ISOMETRIC
SCALE: .050

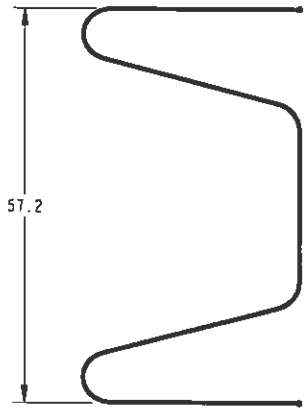

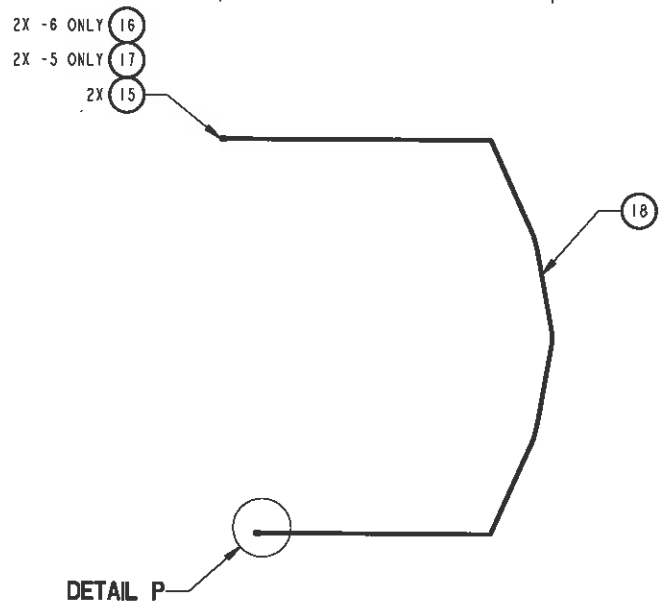

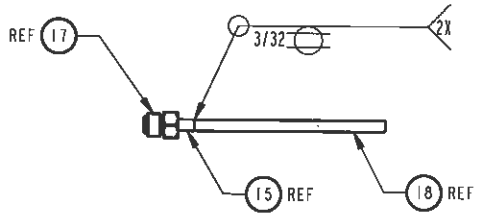

DETAIL P
SCALE: .500

NOTED 6 HEAT EXCHANGER COOLING TUBE -6
SCALE: .075

27

SHOWN 5 HEAT EXCHANGER COOLING TUBE -5
SCALE: .075

PRELIMINARY 03/04/2013

CAD MAINTAINED. CHANGES SHALL BE INCORPORATED ONLY BY THE DESIGN ACTIVITY.		
SOFTWARE: PRO/ENGINEER		
FILENAME: GODU_LH2		
MATERIAL		
HEAT TREATMENT	NEXT ASSY	USED ON
FINAL PROTECTIVE FINISH	APPLICATION	

UNLESS OTHERWISE SPECIFIED DIMENSIONS ARE IN INCHES. INTERPRET DIMENSIONS AND TOLERANCES PER ASME Y14.5M-1994. TOLERANCES ON:

FRACTIONS	DECIMALS	ANGLES
±1/16	1 PL ±.060 2 PL ±.030 3 PL ±.010	1 PL ±.1°

THIRD ANGLE PROJECTION

ORIGINAL DATE OF DRAWING (YY/MM/DD)	12/05/14
DRAFTSMAN: T. BONNER	CHECKER
ENGINEER: T. BONNER	CHECKER
ENGINEER: T. TOMSIK	STRESS
ENGINEER: J. FESMIRE	
SUBMITTED: W. NOTARDONATO	
APPROVED	

ASSEMBLY DETAILS

JOHN F. KENNEDY SPACE CENTER, NASA
KENNEDY SPACE CENTER, FLORIDA

GODU LH2
DEMONSTRATION UNIT,
GROUND OPERATIONS,
LIQUID HYDROGEN,

SIZE	CAGE CODE	DWG NO	REV
C	22264	79K38598	
SCALE: NOTED	UNIT WEIGHT	SHEET 4 OF	

KSC FORM 21-5 NS (9/00)

NOTICE - WHEN GOVERNMENT DRAWINGS, SPECIFICATIONS, OR OTHER DATA ARE USED FOR ANY PURPOSE OTHER THAN IN CONNECTION WITH A DEFINITELY RELATED GOVERNMENT PROCUREMENT OPERATION, THE UNITED STATES GOVERNMENT THEREBY INCURS NO RESPONSIBILITY NOR ANY OBLIGATION WHATSOEVER; AND THE FACT THAT THE GOVERNMENT MAY HAVE FORMULATED, FURNISHED, OR IN ANY WAY SUPPLIED THE SAID DRAWINGS, SPECIFICATIONS OR OTHER DATA IS NOT TO BE REGARDED BY IMPLICATION OR OTHERWISE AS IN ANY MANNER LICENSING THE HOLDER OF ANY OTHER PERSON OR CORPORATION, OR CONVEY, ANY RIGHTS OR PERMISSION TO MANUFACTURE, USE OR SELL ANY PATENTED INVENTION THAT MAY IN ANY WAY BE RELATED THERETO.

REVISION HISTORY					
PART NO.	ZONE	REV	DESCRIPTION	DATE	APPROVAL

SPECIFIC NOTES:

1. BORE 7/32" DIA HOLE THRU VCR BRANCH TEE AND ULTRASONICALLY CLEAN PART.
2. BOND ITEM 35, SILICON DIODE SENSOR HEAD INSIDE ITEM 36, SPACER INSERT WITH STYCAST AND ALLOW TO CURE. SENSOR TIP SHALL PROTRUDE 0.09" FROM INSERT.
3. BOND SPACER INSERT INTO BORED VCR BRANCH TEE AND ALLOW TO CURE .
   A. TO MAINTAIN THE 0.090" CRITICAL DIMENSION OF TEMP. SENSOR TIP PROTRUDING INSIDE RUN OF TEE, USE A PRECISION SHIM (EG. TWO CYLINDRICAL RODS WITH MACHINED HALF-ROUND FLATS).
4. ATTACH FEMALE NPT ADAPTER TO VCR TEE. TIGHTEN FTG. IN ACCORDANCE WITH VENDOR SPECS.
5. ASSEMBLE DIODE LEAD WIRES TO CONAX GLAND SEAL. PROVIDE WIRE SLACK INSIDE THE FEMALE ADAPTER.
6. ATTACH GLAND SEAL TO FEMALE ADAPTER FTG. AND TIGHTEN.
7. PERFORM A HELIUM MASS SPEC. LEAK CHECK OF TEMP. SENSOR ASSEMBLY.
8. VERIFY DIODE TEMP. SENSOR FUNCTION IN LIQUID NITROGEN BATH.

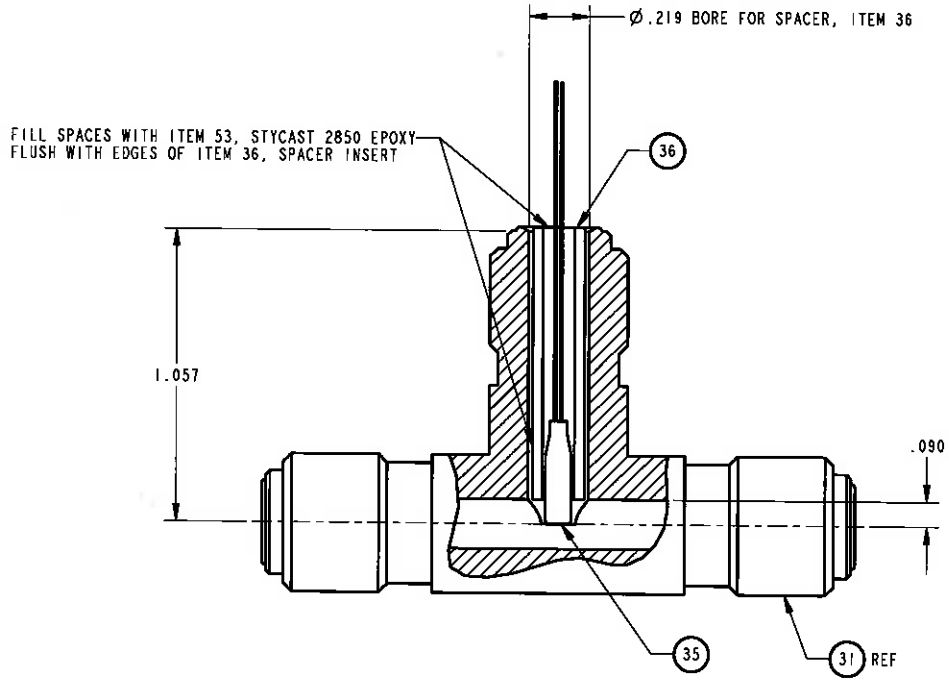

VCR TEE MODIFICATION FOR HE TEMP SENSOR
SCALE: 3.000

PRELIMINARY 03/04/2013

CAD MAINTAINED. CHANGES SHALL BE INCORPORATED ONLY BY THE DESIGN ACTIVITY.		
SOFTWARE: PRO/ENGINEER		
FILENAME: GODU_LH2		
MATERIAL		
HEAT TREATMENT	NEXT ASSY	USED ON
FINAL PROTECTIVE FINISH	APPLICATION	

UNLESS OTHERWISE SPECIFIED DIMENSIONS ARE IN INCHES. INTERPRET DIMENSIONS AND TOLERANCES PER ASME Y14.5M-1994. TOLERANCES ON:

FRACTIONS	DECIMALS	ANGLES
±1/16	1 PL ±.060 2 PL ±.030 3 PL ±.010	1 PL ±.1°

THIRD ANGLE PROJECTION

ORIGINAL DATE OF DRAWING (YY/MM/DD)	12/05/14
DRAFTSMAN: T. BONNER	CHECKER
ENGINEER: T. BONNER	CHECKER
ENGINEER: T. TOMSIK	STRESS
ENGINEER: J. FESMIRE	
SUBMITTED: W. NOTARDONATO	
APPROVED	

PART DETAILS

JOHN F. KENNEDY SPACE CENTER, NASA
KENNEDY SPACE CENTER, FLORIDA

GODU LH2
DEMONSTRATION UNIT,
GROUND OPERATIONS,
LIQUID HYDROGEN,

SIZE	CAGE CODE	DWG NO	REV
C	22264	79K38598	
SCALE: NOTED		UNIT WEIGHT	SHEET 5 OF

DWG NO 79K38598 SHEET 5 REV

NOTICE - WHEN GOVERNMENT DRAWINGS, SPECIFICATIONS, OR OTHER DATA ARE USED FOR ANY PURPOSE OTHER THAN IN CONNECTION WITH A DEFINITELY RELATED GOVERNMENT PROCUREMENT OPERATION, THE UNITED STATES GOVERNMENT THEREBY INCURS NO RESPONSIBILITY NOR ANY OBLIGATION WHATSOEVER; AND THE FACT THAT THE GOVERNMENT MAY HAVE FORMULATED, FURNISHED, OR IN ANY WAY SUPPLIED THE SAID DRAWINGS, SPECIFICATIONS OR OTHER DATA IS NOT TO BE REGARDED BY IMPLICATION OR OTHERWISE AS IN ANY MANNER LICENSING THE HOLDER OR ANY OTHER PERSON OR CORPORATION, OR CONVEYING ANY RIGHTS OR PERMISSION TO MANUFACTURE, USE, OR SELL ANY PATENTED INVENTION THAT MAY IN ANY WAY BE RELATED THERETO.

REVISION HISTORY					
PART NO.	ZONE	REV	DESCRIPTION	DATE	APPROVAL

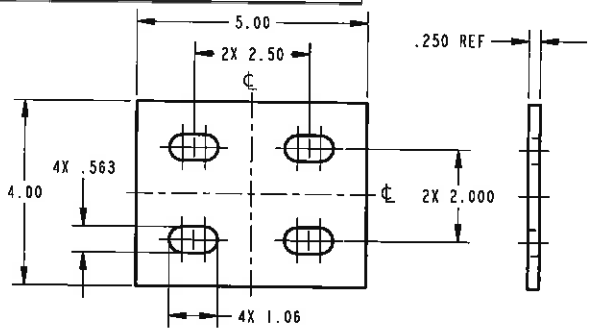

(23) CONNECTION PLATE
SCALE: .500

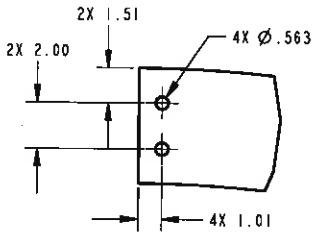

DETAIL T
SCALE: .250

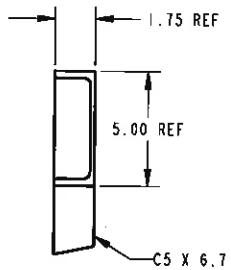

DETAIL U
SCALE: .250

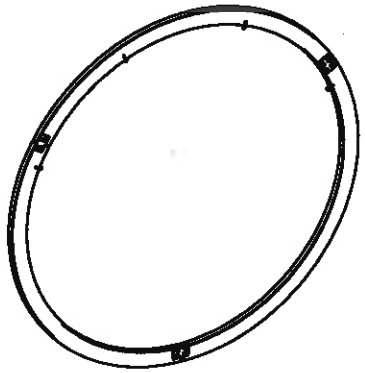

STIFFENG RING ISOMETRIC
SCALE: .038

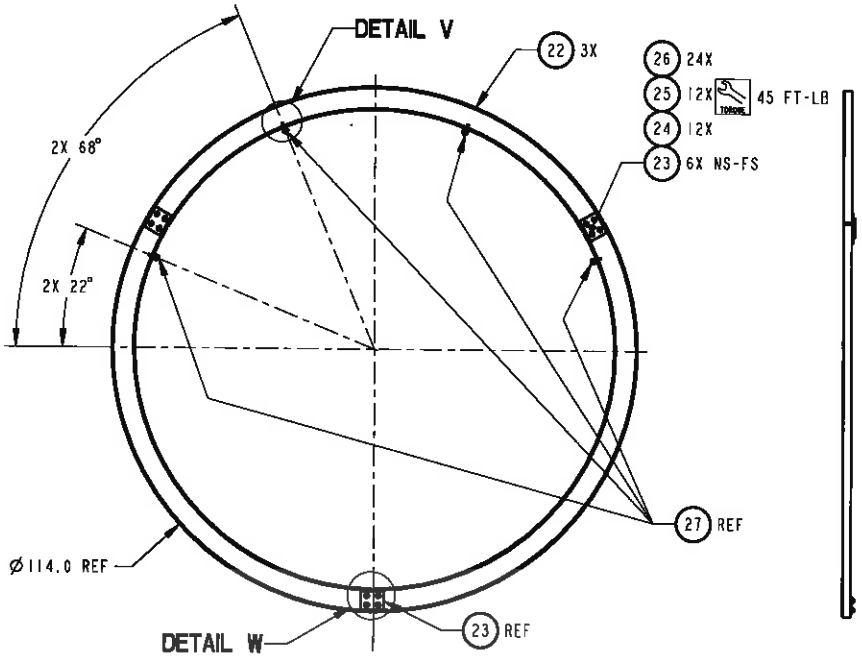

(21) STIFFENING RING -8
SCALE: .050

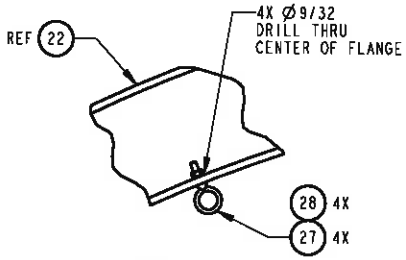

DETAIL V
SCALE: .250

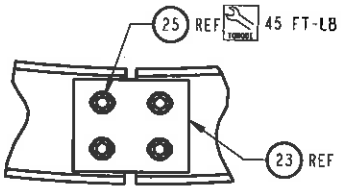

DETAIL W
SCALE: .250

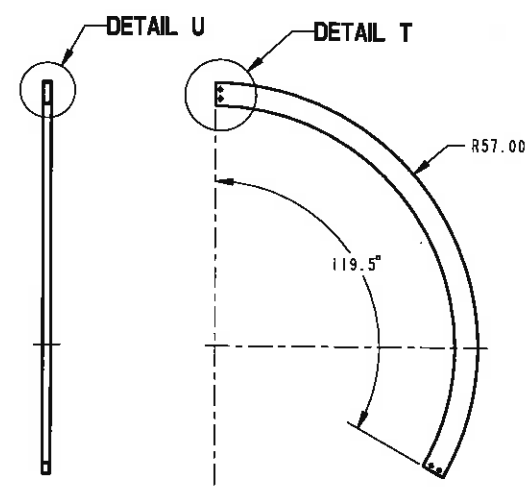

(22) RING SECTION
SCALE: .050

PRELIMINARY
03/04/2013

CAD MAINTAINED. CHANGES SHALL BE INCORPORATED ONLY BY THE DESIGN ACTIVITY.

SOFTWARE: PRO/ENGINEER
FILENAME: GODU_LH2
MATERIAL:
HEAT TREATMENT:
FINAL PROTECTIVE FINISH:

NEXT ASSY	USED ON
APPLICATION	

UNLESS OTHERWISE SPECIFIED DIMENSIONS ARE IN INCHES. INTERPRET DIMENSIONS AND TOLERANCES PER ASME Y14.5M-1994. TOLERANCES ON:

FRACTIONS	DECIMALS	ANGLES
±1/16	1 PL ±.060 2 PL ±.030 3 PL ±.010	1 PL ±.1°

THIRD ANGLE PROJECTION

ORIGINAL DATE OF DRAWING (YY/MM/DD): 12/05/14
DRAFTSMAN: T. BONNER — CHECKER:
ENGINEER: T. BONNER — CHECKER:
ENGINEER: T. TOMSIK — STRESS:
ENGINEER: J. FESMIRE
SUBMITTED: W. NOTARDONATO
APPROVED:

ASSEMBLY / PART DETAILS

JOHN F. KENNEDY SPACE CENTER, NASA
KENNEDY SPACE CENTER, FLORIDA

GODU LH2
DEMONSTRATION UNIT,
GROUND OPERATIONS, .
LIQUID HYDROGEN,

SIZE	CAGE CODE	DWG NO	REV
C	22264	79K38598	
SCALE: NOTED	UNIT WEIGHT	SHEET 6 OF	

DWG NO 79K38598 SHEET 6 REV

NSC FORM 21-5 NS (8/88)

NOTICE - WHEN GOVERNMENT DRAWINGS, SPECIFICATIONS, OR OTHER DATA ARE USED FOR ANY PURPOSE OTHER THAN IN CONNECTION WITH A DEFINITELY RELATED GOVERNMENT PROCUREMENT OPERATION, THE UNITED STATES GOVERNMENT THEREBY INCURS NO RESPONSIBILITY NOR ANY OBLIGATION WHATSOEVER; AND THE FACT THAT THE GOVERNMENT MAY HAVE FORMULATED, FURNISHED, OR IN ANY WAY SUPPLIED THE SAID DRAWINGS, SPECIFICATIONS OR OTHER DATA IS NOT TO BE REGARDED BY IMPLICATION OR OTHERWISE AS IN ANY MANNER LICENSING THE HOLDER OR ANY OTHER PERSON OR CORPORATION, OR CONVEYING ANY RIGHTS OR PERMISSION TO MANUFACTURE, USE, OR SELL ANY PATENTED INVENTION THAT MAY IN ANY WAY BE RELATED THERETO.

REVISION HISTORY					
PART NO.	ZONE	REV	DESCRIPTION	DATE	APPROVAL

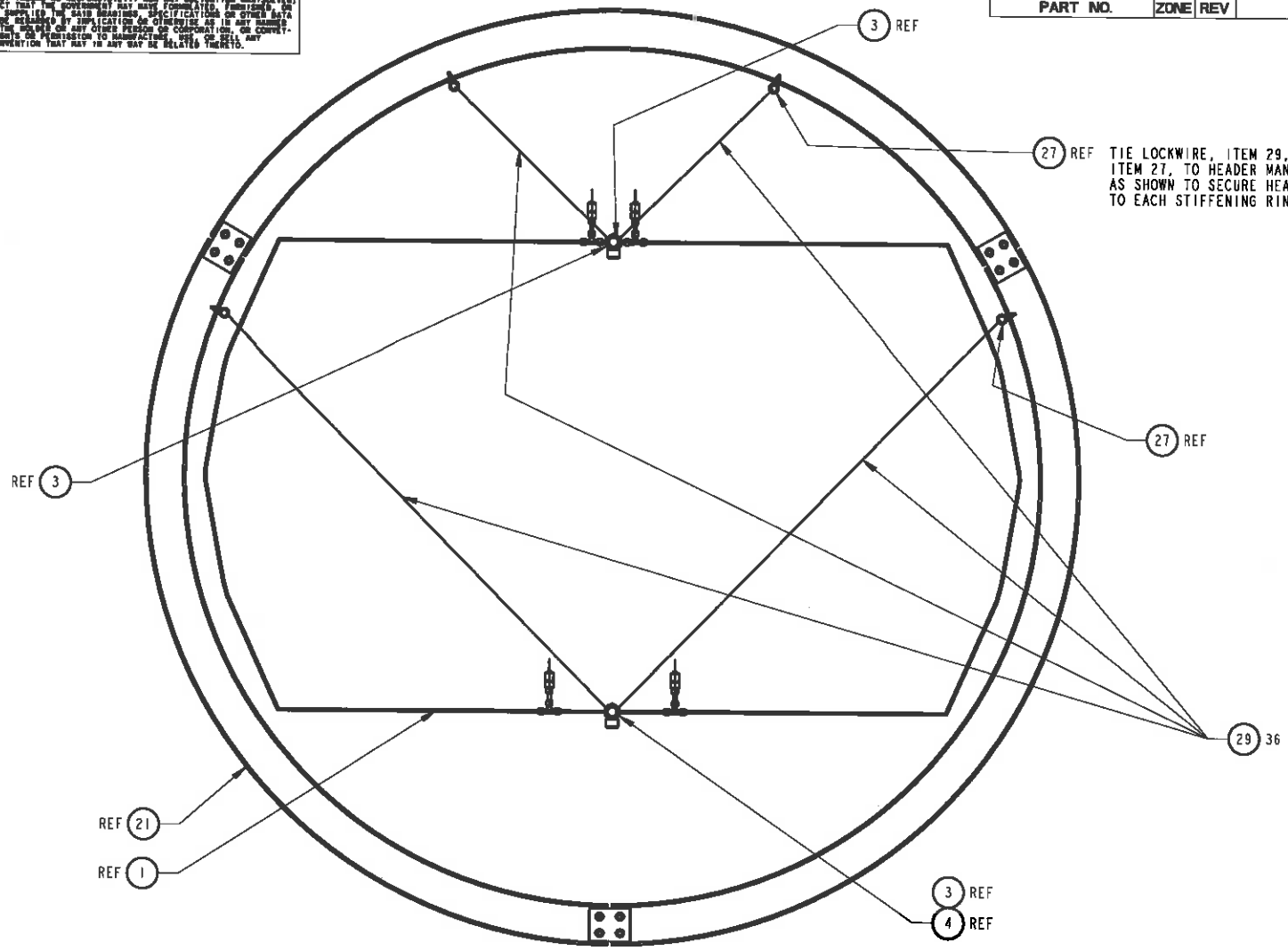

HEAT EXCHANGER SUPPORT LAYOUT

SCALE: .100

PRELIMINARY 03/04/2013

CAD MAINTAINED. CHANGES SHALL BE INCORPORATED ONLY BY THE DESIGN ACTIVITY.

SOFTWARE: PRO/ENGINEER
FILENAME: GODU_LH2
MATERIAL:
HEAT TREATMENT:
FINAL PROTECTIVE FINISH:

NEXT ASSY	USED ON
APPLICATION	

UNLESS OTHERWISE SPECIFIED DIMENSIONS ARE IN INCHES. INTERPRET DIMENSIONS AND TOLERANCES PER ASME Y14.5M-1994. TOLERANCES ON:

FRACTIONS	DECIMALS	ANGLES
±1/16	1 PL ±.060 2 PL ±.030 3 PL ±.010	1 PL ±.1°

THIRD ANGLE PROJECTION

ORIGINAL DATE OF DRAWING (YY/MM/DD): 12/05/14

DRAFTSMAN: T. BONNER — CHECKER:
ENGINEER: T. BONNER — CHECKER:
ENGINEER: T. TOMSIK — STRESS:
ENGINEER: J. FESMIRE
SUBMITTED: W. NOTARDONATO
APPROVED:

ASSEMBLY DETAILS

JOHN F. KENNEDY SPACE CENTER, NASA
KENNEDY SPACE CENTER, FLORIDA

GODU LH2
DEMONSTRATION UNIT,
GROUND OPERATIONS,
LIQUID HYDROGEN,

SIZE	CAGE CODE	DWG NO	REV
C	22264	79K38598	
SCALE: NOTED		UNIT WEIGHT	SHEET 7 OF

DWG NO 79K38598 SHEET 7 REV

NSC FORM 21-5 DS (9/66)

NOTICE - THE GOVERNMENT DRAWINGS, SPECIFICATIONS, OR OTHER DATA ARE USED FOR ANY PURPOSE OTHER THAN IN CONNECTION WITH A DEFINITELY RELATED GOVERNMENT PROCUREMENT OPERATION, THE UNITED STATES GOVERNMENT THEREBY INCURS NO RESPONSIBILITY NOR ANY OBLIGATION WHATSOEVER; AND THE FACT THAT THE GOVERNMENT MAY HAVE FORMULATED, FURNISHED, OR IN ANY WAY SUPPLIED THE SAID DRAWINGS, SPECIFICATIONS OR OTHER DATA IS NOT TO BE REGARDED BY IMPLICATION OR OTHERWISE AS IN ANY MANNER LICENSING THE HOLDER OF ANY OTHER PERSON OR CORPORATION, OR CONVEYING ANY RIGHTS OR PERMISSION TO MANUFACTURE, USE, OR SELL ANY PATENTED INVENTION THAT MAY IN ANY WAY BE RELATED THEREBY.

A BOND ITEM 35, TEMP SENSOR TO ITEM 46, SENSOR MOUNT USING ITEM 53, EPOXY AS SHOWN IN DETAIL Y PRIOR TO INSTALLING SENSOR MOUNT TO RAKE TUBE.

B BOND ITEM 46, SENSOR MOUNT TO RAKE TUBES USING ITEM 53, EPOXY PRIOR TO INSTALLING ITEM 47, POP RIVETS.

C ONLY ITEM 39, LH2 TEMPERATURE SENSOR RAKE 3 WILL REQUIRE ITEM 46, SENSOR MOUNT AT THIS LOCATION.

REVISION HISTORY					
PART NO.	ZONE	REV	DESCRIPTION	DATE	APPROVAL

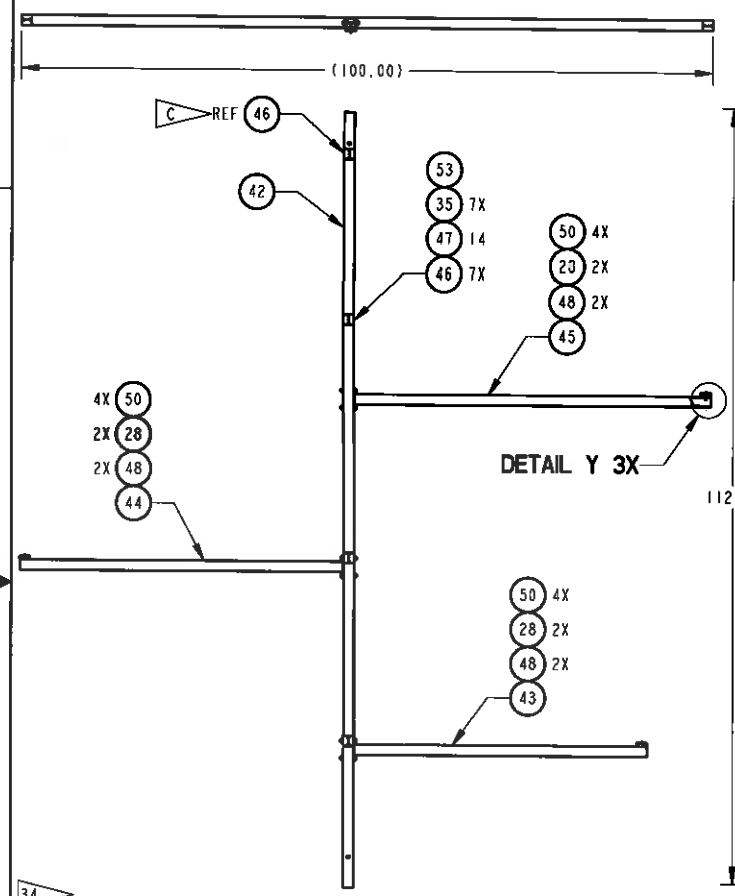

34 35 37 LH2 TEMPERATURE SENSOR RAKE 1 -8
SCALE: .075
NOTED

34 35 39 LH2 TEMPERATURE SENSOR RAKE 3 -10
SCALE: .075
SHOWN

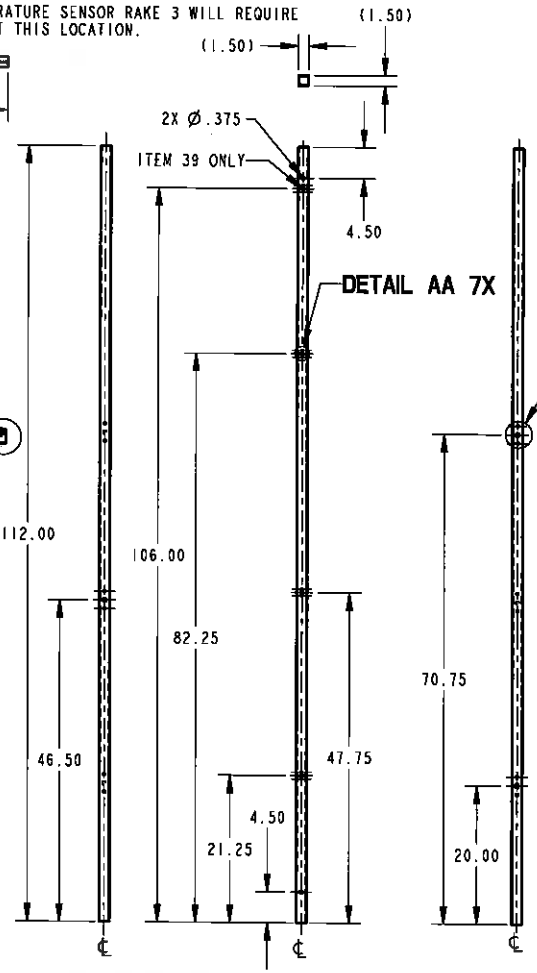

40 SENSOR RAKE 1 VERTICAL TUBE
SCALE: .075
NOTED

42 SENSOR RAKE 3 VERTICAL TUBE
SCALE: .075
SHOWN

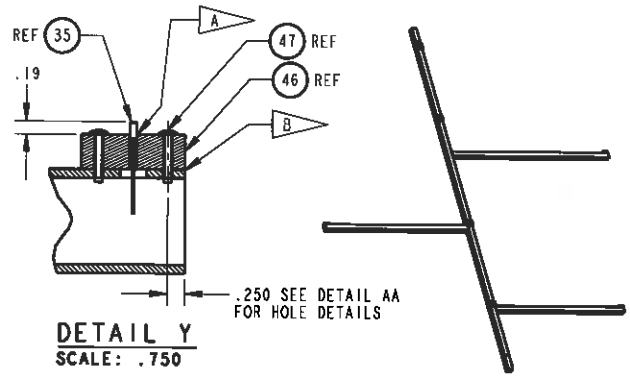

DETAIL Y
SCALE: .750

SENSOR RAKE ISOMETRIC
SCALE: .038

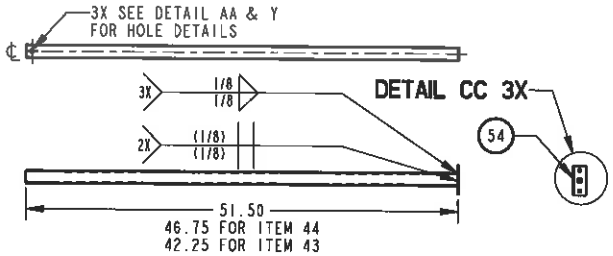

45 SENSOR RAKE HORIZONTAL TUBE, TOP
SCALE: .075
SHOWN

44 SENSOR RAKE HORIZONTAL TUBE, MIDDLE
SCALE: .075
NOTED

43 SENSOR RAKE HORIZONTAL TUBE, BOTTOM
SCALE: .075
NOTED

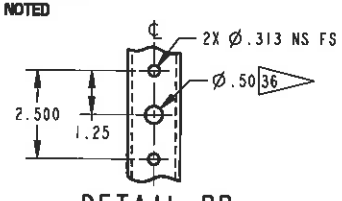

DETAIL BB
SCALE: .380

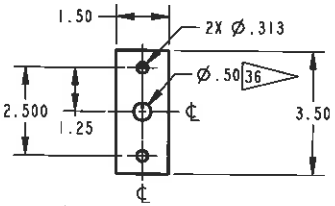

DETAIL CC
SCALE: .380

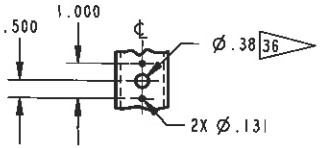

DETAIL AA
SCALE: .380

PRELIMINARY 03/04/2013

CAD MAINTAINED. CHANGES SHALL BE INCORPORATED ONLY BY THE DESIGN ACTIVITY.	NEXT ASSY	USED ON
SOFTWARE: PRO/ENGINEER		
FILENAME: GODU_LH2		
MATERIAL		
HEAT TREATMENT		
FINAL PROTECTIVE FINISH	APPLICATION	

UNLESS OTHERWISE SPECIFIED DIMENSIONS ARE IN INCHES. INTERPRET DIMENSIONS AND TOLERANCES PER ASME Y14.5M-1994. TOLERANCES ON:

FRACTIONS	DECIMALS	ANGLES
±1/16	1 PL ±.060 2 PL ±.030 3 PL ±.010	1 PL ±.1°

THIRD ANGLE PROJECTION

ORIGINAL DATE OF DRAWING (YY/MM/DD)	12/05/14
DRAFTSMAN T. BONNER	CHECKER
ENGINEER T. BONNER	CHECKER
ENGINEER T. TOMSIK	STRESS
ENGINEER J. FESMIRE	
SUBMITTED W. NOTARDONATO	
APPROVED	

ASSEMBLY & PART DETAILS

JOHN F. KENNEDY SPACE CENTER, NASA
KENNEDY SPACE CENTER, FLORIDA

GODU LH2
DEMONSTRATION UNIT,
GROUND OPERATIONS,
LIQUID HYDROGEN,

SIZE	CAGE CODE	DWG NO	REV
C	22264	79K38598	
SCALE NOTED		UNIT WEIGHT	SHEET 8 OF

KSC FORM 21-5 RS (9/00)

NOTICE - WHEN GOVERNMENT DRAWINGS, SPECIFICATIONS, OR OTHER DATA ARE USED FOR ANY PURPOSE OTHER THAN IN CONNECTION WITH A DEFINITELY RELATED GOVERNMENT PROCUREMENT OPERATION, THE UNITED STATES GOVERNMENT THEREBY INCURS NO RESPONSIBILITY NOR ANY OBLIGATION WHATSOEVER; AND THE FACT THAT THE GOVERNMENT MAY HAVE FORMULATED, FURNISHED, OR IN ANY WAY SUPPLIED THE SAID DRAWINGS, SPECIFICATIONS OR OTHER DATA IS NOT TO BE REGARDED BY IMPLICATION OR OTHERWISE AS IN ANY MANNER LICENSING THE HOLDER OR ANY OTHER PERSON OR CORPORATION, OR CONVEYING ANY RIGHTS OR PERMISSION TO MANUFACTURE, USE, OR SELL ANY PATENTED INVENTION THAT MAY IN ANY WAY BE RELATED THERETO.

REVISION HISTORY					
PART NO.	ZONE	REV	DESCRIPTION	DATE	APPROVAL

A BOND ITEM 35, TEMP SENSOR TO ITEM 46, SENSOR MOUNT USING ITEM 53, EPOXY AS SHOWN IN DETAIL Y ON SHEET 8 PRIOR TO INSTALLING SENSOR MOUNT TO RAKE TUBE.

B BOND ITEM 46, SENSOR MOUNT TO RAKE TUBE USING ITEM 53, EPOXY PRIOR TO INSTALLING ITEM 47, POP RIVETS

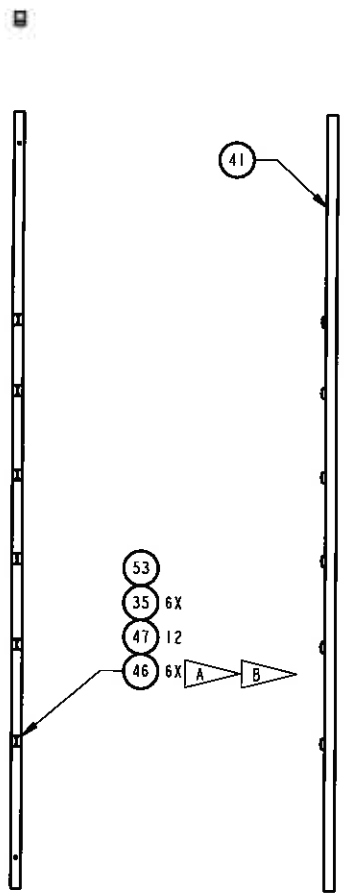

34 38 LH2 TEMPERATURE SENSOR RAKE 2 -9
SCALE: .075

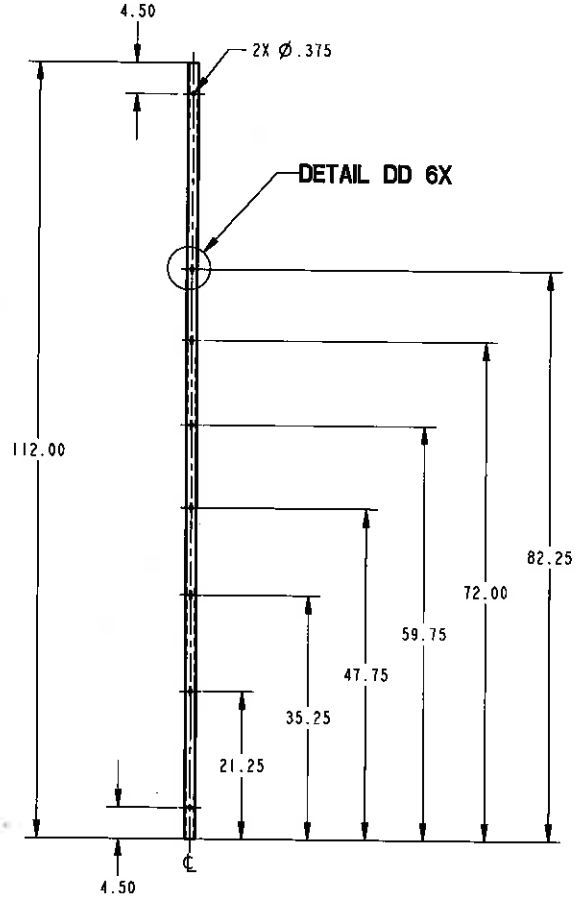

41 SENSOR RAKE 2 VERTICAL TUBE
SCALE: .075

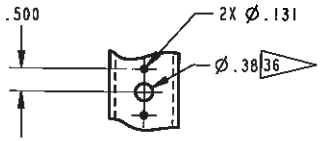

DETAIL DD
SCALE: .500

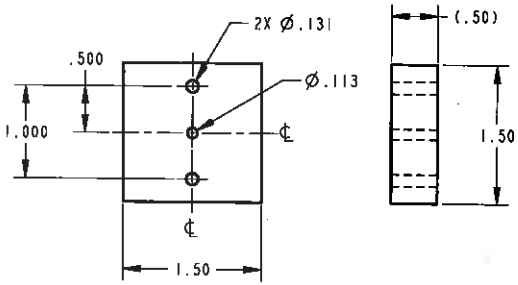

46 TEMPERATURE SENSOR MOUNT
SCALE: 1.000

PRELIMINARY 03/04/2013

CAD MAINTAINED. CHANGES SHALL BE INCORPORATED ONLY BY THE DESIGN ACTIVITY.

SOFTWARE: PRO/ENGINEER
FILENAME: GODU_LH2
MATERIAL:
HEAT TREATMENT:
FINAL PROTECTIVE FINISH:

NEXT ASSY | USED ON
APPLICATION

UNLESS OTHERWISE SPECIFIED DIMENSIONS ARE IN INCHES. INTERPRET DIMENSIONS AND TOLERANCES PER ASME Y14.5M-1994. TOLERANCES ON:

FRACTIONS	DECIMALS	ANGLES
±1/16	1 PL ±.060 2 PL ±.030 3 PL ±.010	1 PL ±.1°

THIRD ANGLE PROJECTION

ORIGINAL DATE OF DRAWING (YY/MM/DD) 12/05/14
DRAFTSMAN: T. BONNER | CHECKED:
ENGINEER: T. BONNER | CHECKED:
ENGINEER: T. TOMSIK | STRESS:
ENGINEER: J. FESMIRE
SUBMITTED: W. NOTARDONATO
APPROVED:

ASSEMBLY & PART DETAILS
JOHN F. KENNEDY SPACE CENTER, NASA
KENNEDY SPACE CENTER, FLORIDA

GODU LH2
DEMONSTRATION UNIT,
GROUND OPERATIONS,
LIQUID HYDROGEN,

SIZE: C | CAGE CODE: 22264 | DWG NO: 79K38598 | REV:
SCALE: NOTED | UNIT WEIGHT: | SHEET 9 OF

DWG NO 79K38598 SHEET 9 REV

NSC FORM 21-5 DS (8/00)

NOTICE - WHEN GOVERNMENT DRAWINGS, SPECIFICATIONS, OR OTHER DATA ARE USED FOR ANY PURPOSE OTHER THAN IN CONNECTION WITH A DEFINITELY RELATED GOVERNMENT PROCUREMENT OPERATION, THE UNITED STATES GOVERNMENT THEREBY INCURS NO RESPONSIBILITY NOR ANY OBLIGATION WHATSOEVER; AND THE FACT THAT THE GOVERNMENT MAY HAVE FORMULATED, FURNISHED, OR IN ANY WAY SUPPLIED THE SAID DRAWINGS, SPECIFICATIONS OR OTHER DATA IS NOT TO BE REGARDED BY IMPLICATION OR OTHERWISE AS IN ANY MANNER LICENSING THE HOLDER OR ANY OTHER PERSON OR CORPORATION, OR CONVEYING ANY RIGHTS OR PERMISSION TO MANUFACTURE, USE, OR SELL ANY PATENTED INVENTION THAT MAY IN ANY WAY BE RELATED THERETO.

REVISION HISTORY					
PART NO.	ZONE	REV	DESCRIPTION	DATE	APPROVAL

LIQUID HYDROGEN TANK VOLUME	
LH2 LEVEL Y	LH2 GALLONS
22.25	5,000
36.25	10,000
48.75	15,000
60.75	20,000
73.00	25,000
83.25	29,000

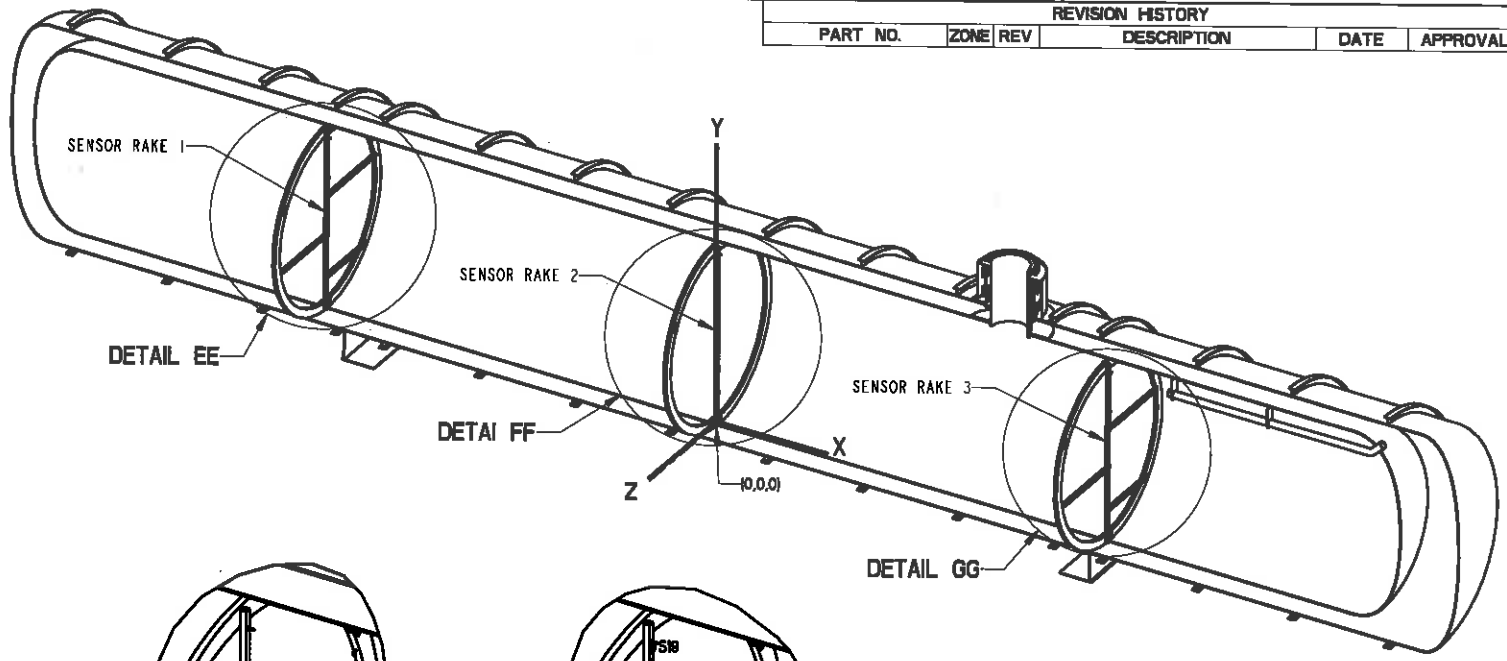

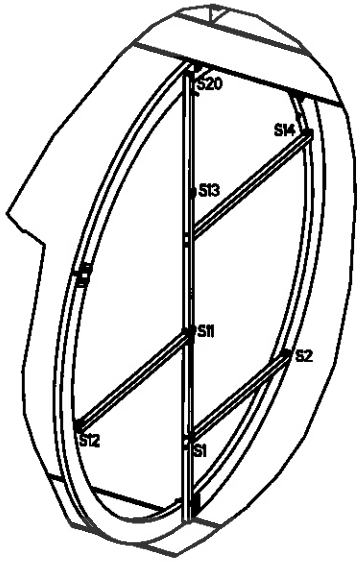

DETAIL EE
SCALE: .050

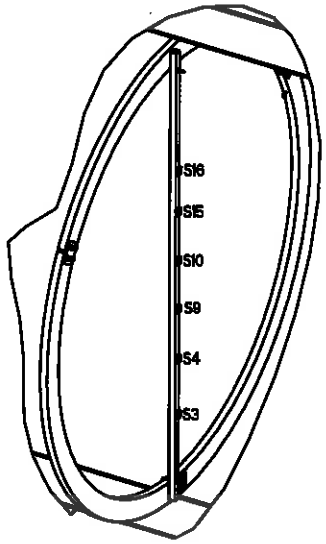

DETAIL FF
SCALE: .050

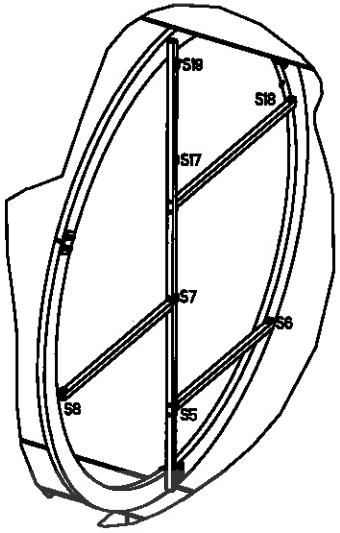

DETAIL GG
SCALE: .050

TEMPERATURE SENSOR LOCATION COORDINATES				
SENSOR #	RAKE #	X	Y	Z
S1	1	-242.28	22.25	3.25
S2	1	-243.53	22.25	-39.13
S3	2	2.83	22.25	3.25
S4	2	2.83	36.25	3.25
S5	3	247.93	22.25	3.25
S6	3	246.68	22.25	-39.13
S7	3	247.93	48.75	3.25
S8	3	246.68	48.75	50.13
S9	2	2.83	48.75	3.25
S10	2	2.83	60.75	3.25
S11	1	-242.28	48.75	3.25
S12	1	-243.53	48.75	50.13
S13	1	-242.28	83.25	3.25
S14	1	-243.53	73.00	-48.38
S15	2	2.83	73.00	3.25
S16	2	2.83	83.25	3.25
S17	3	247.93	83.25	3.25
S18	3	246.68	73.00	-48.38
S19	3	247.93	107.00	3.25
S20		-242.88	113.25	0.00

PRELIMINARY
03/04/2013

CAD MAINTAINED. CHANGES SHALL BE INCORPORATED ONLY BY THE DESIGN ACTIVITY.

SOFTWARE: PRO/ENGINEER
FILENAME: GODU_LH2
MATERIAL:
HEAT TREATMENT:
FINAL PROTECTIVE FINISH:

NEXT ASSY	USED ON
APPLICATION	

UNLESS OTHERWISE SPECIFIED DIMENSIONS ARE IN INCHES. INTERPRET DIMENSIONS AND TOLERANCES PER ASME Y14.5M-1994. TOLERANCES ON:

FRACTIONS	DECIMALS	ANGLES
±1/16	1 PL ±.060 2 PL ±.030 3 PL ±.010	1 PL ±.1°

THIRD ANGLE PROJECTION

ORIGINAL DATE OF DRAWING (YY/MM/DD) 12/05/14

DRAFTSMAN: T. BONNER — CHECKER:
ENGINEER: T. BONNER — CHECKER:
ENGINEER: T. TOMSIK — STRESS:
ENGINEER: J. FESMIRE
SUBMITTED: W. NOTARDONATO
APPROVED:

JOHN F. KENNEDY SPACE CENTER, NASA
KENNEDY SPACE CENTER, FLORIDA

GODU LH2
DEMONSTRATION UNIT,
GROUND OPERATIONS,
LIQUID HYDROGEN,

SIZE	CAGE CODE	DWG NO	REV
C	22264	79K38598	
SCALE	NOTED	UNIT WEIGHT	SHEET 10 OF

DWG NO 79K38598 SHEET 10 REV

KSC FORM 21-5 MS 10/00

NOTICE - WHEN GOVERNMENT DRAWINGS, SPECIFICATIONS, OR OTHER DATA ARE USED FOR ANY PURPOSE OTHER THAN IN CONNECTION WITH A DEFINITELY RELATED GOVERNMENT PROCUREMENT OPERATION, THE UNITED STATES GOVERNMENT THEREBY INCURS NO RESPONSIBILITY NOR ANY OBLIGATION WHATSOEVER; AND THE FACT THAT THE GOVERNMENT MAY HAVE FORMULATED, FURNISHED, OR IN ANY WAY SUPPLIED THE SAID DRAWINGS, SPECIFICATIONS OR OTHER DATA IS NOT TO BE REGARDED BY IMPLICATION OR OTHERWISE AS IN ANY MANNER LICENSING THE HOLDER OR ANY OTHER PERSON OR CORPORATION, OR CONVEYING ANY RIGHTS OR PERMISSION TO MANUFACTURE, USE, OR SELL ANY PATENTED INVENTION THAT MAY IN ANY WAY BE RELATED THERETO.

REVISION HISTORY					
PART NO.	ZONE	REV	DESCRIPTION	DATE	APPROVAL

GENERAL NOTES:

1. INTERPRET THIS DRAWING PER ASME Y14.5M-2009.
2. PERFECT ORIENTATION, COAXIALITY, OR SYMMETRY AT MMC FOR INTERRELATED FEATURES IS REQUIRED UNLESS SEPARATE TOLERANCES ARE SHOWN AT THE FEATURE. GENERAL DRAWING TOLERANCE DOES NOT APPLY TO IMPLIED 90° ANGLES.
3. STOCK SIZES ON PARTS LIST ARE APPROXIMATE, SEE DRAWING FOR CORRECT DIMENSIONS. ADD APPROPRIATE MATERIAL AS REQUIRED FOR CUTTING AND MACHINING WHEN PURCHASING MATERIAL.
4. REMOVE SCALE, BURRS AND BREAK SHARP EDGES.

MATERIALS:

5. ALUMINUM-ALLOY EXTRUDED BARS, RODS, WIRE, PROFILES, AND TUBE SHALL BE PER ASTM B221.
6. STAINLESS STEEL BARS (rounds, squares, and hexagons) AND SHAPES (angles, tees, and channels) SHALL BE PER ASTM A276, CONDITION B AND ASTM A484.
7. STAINLESS STEEL PLATE, SHEET, AND STRIP AND BAR SHALL BE IN THE ANNEALED CONDITION AND SHALL BE PER ASTM A240 OR ASTM A666.
8. STAINLESS STEEL PIPES (AND TUBE), SEAMLESS AND WELDED, SHALL BE PER ASTM A269.

WELDING:

9. UNLESS OTHERWISE SPECIFIED ON THE WELD SYMBOL, STAINLESS STEEL WELDING SHALL BE PERFORMED IN ACCORDANCE WITH NASA-SPEC-5004 AND AWS D1.6. INSPECTION SHALL BE PER NASA-SPEC-5004, CLASS B (VISUAL AND DYE PENETRANT).
10. UNLESS OTHERWISE SPECIFIED ON THE WELD SYMBOL, ALUMINUM WELDING SHALL BE PERFORMED IN ACCORDANCE WITH NASA-SPEC-5004 AND AWS D1.2. INSPECTION SHALL BE PER NASA-SPEC-5004, CLASS B (VISUAL AND DYE PENETRANT).

VENDORS:

11. MCMASTER CARR, ATLANTA, GA 30336-2853, (404) 346-7000
12. BOLT DEPOT, NORTH WEYMOUTH, MA 02191, (866) 337-9888
13. DESIGNED AND FABRICATED AT NASA STENNIS SPACE CENTER, P.O.C. HOWARD J. CONYERS, Ph.D., EA 33 ENGINEERING AND TEST DIRECTORATE, 228-688-3500
14. CONAX TECHNOLOGIES, BUFFALO, NY 14225, (716) 684-4500
15. SCIENTIFIC INSTRUMENTS, WEST PALM BEACH, FLA 33407, (561) 881-8500
16. LAKE SHORE CRYOTRONICS, INC., WESTERVILLE, OH 43082, (614) 891-2244

PRELIMINARY
03/04/2013

CAD MAINTAINED. CHANGES SHALL BE INCORPORATED ONLY BY THE DESIGN ACTIVITY.		
SOFTWARE: PRO/ENGINEER		
FILENAME: GODU_LH2		
MATERIAL		
HEAT TREATMENT	NEXT ASSY	USED ON
FINAL PROTECTIVE FINISH	APPLICATION	

UNLESS OTHERWISE SPECIFIED DIMENSIONS ARE IN INCHES. INTERPRET DIMENSIONS AND TOLERANCES PER ASME Y14.5M-1994. TOLERANCES ON:

FRACTIONS	DECIMALS	ANGLES
±1/16	1 PL ±.060 2 PL ±.030 3 PL ±.010	1 PL ±.1°

THIRD ANGLE PROJECTION

ORIGINAL DATE OF DRAWING (YY/MM/DD)	12/05/14
DRAFTSMAN: T. BONNER	CHECKER
ENGINEER: T. BONNER	CHECKER
ENGINEER: T. TOMSIK	STRESS
ENGINEER: J. FESMIRE	
SUBMITTED: W. NOTARDONATO	
APPROVED	

NOTES

JOHN F. KENNEDY SPACE CENTER, NASA
KENNEDY SPACE CENTER, FLORIDA

GODU LH2
DEMONSTRATION UNIT,
GROUND OPERATIONS,
LIQUID HYDROGEN,

SIZE	CAGE CODE	DWG NO	REV
C	22264	79K38598	
SCALE: NOTED	UNIT WEIGHT	SHEET 11 OF	

REV | SHEET 11 | DWG NO 79K38598

NSC FORM 21-5 NS (8/88)

NOTICE - WHEN GOVERNMENT DRAWINGS, SPECIFICATIONS, OR OTHER DATA ARE USED FOR ANY PURPOSE OTHER THAN IN CONNECTION WITH A DEFINITELY RELATED GOVERNMENT PROCUREMENT OPERATION, THE UNITED STATES GOVERNMENT THEREBY INCURS NO RESPONSIBILITY NOR ANY OBLIGATION WHATSOEVER; AND THE FACT THAT THE GOVERNMENT MAY HAVE FORMULATED, FURNISHED, OR IN ANY WAY SUPPLIED THE SAID DRAWINGS, SPECIFICATIONS OR OTHER DATA IS NOT TO BE REGARDED BY IMPLICATION OR OTHERWISE AS IN ANY MANNER LICENSING THE HOLDER OR ANY OTHER PERSON OR CORPORATION, OR CONVEYING ANY RIGHTS OR PERMISSION TO MANUFACTURE, USE, OR SELL ANY PATENTED INVENTION THAT MAY IN ANY WAY BE RELATED THERETO.

REVISION HISTORY					
PART NO.	ZONE	REV	DESCRIPTION	DATE	APPROVAL

FABRICATION & ASSEMBLY NOTES:

HEAT EXCHANGER:

17. HEAT EXCHANGER ASSEMBLY IS DESIGNED, FABRICATED AND TESTED IN ACCORDANCE WITH ASME B31.3 PROCESS PIPING CODE, 2008 ED.
18. HEAT EXCHANGER DESIGN CONDITIONS:
    A. DESIGN PRESSURE: FULL VACUUM TO 250 PSIG.
    B. DESIGN TEMPERATURE: -435 deg F TO +100 deg F
    C. PROCESS FLUIDS: GHE INTERNAL / LH2 EXTERNAL
19. TUBING PER KSC-SPEC-Z-0007 and ASTM A269, STANDARD SPECIFICATION FOR SEAMLESS AND WELDED AUSTENITIC STAINLESS STEEL TUBING FOR GENERAL SERVICE.
20. WELDING PER AWS D10.4, RECOMMENDED PRACTICES FOR WELDING AUSTENITIC CHROMIUM-NICKEL STAINLESS STEEL PIPING AND TUBING.
21. CLEANING OF INTERNAL SURFACES PER KSC C-123J TO LEVEL 300A.
22. ALL VCR FITTINGS MUST BE PROTECTED WITH CAPS AND PLUGS DURING ALL PHASES OF SHIPPING, HANDLING, FABRICATION, AND INSTALLATION.
23. THE INTERNAL SURFACES OF ALL FITTINGS, TUBING, AND FLEXHOSES MUST BE KEPT CLEAN AND DRY.
24. FOLLOW SWAGELOCK VCR FITTINGS GUIDEBOOK FOR THE ASSEMBLY AND TIGHTENING DETAILS FOR ALL VCR CONNECTIONS.
25. MAINTAIN CLEANLINESS OF PACKAGED PARTS AND MATERIALS TO THE MAXIMUM PRACTICAL EXTENT DURING ALL PHASES OF FABRICATION, HANDLING, AND CHECKOUT.
26. TOTAL WEIGHT OF HX ASSEMBLY IS ESTIMATED TO BE 175 LBM. ASSEMBLY IS SUSPENDED FROM SST WIRES. STRUCTURAL INTEGRITY IS PROVIDED BY THE THREE DIMENSIONAL ARCHITECTURE OF THE COOLING TUBE NETWORK.
27. COOLING TUBES, ITEMS 5 & 6 (40 EACH, 20-FEET LONG EACH) ARE TO BE PRE-FABRICATED (PRE-BENT) AND THEN FIT THROUGH THE MANWAY WITH SOME MINOR DEFORMATION EXPECTED.
28. FABRICATION STEPS:
    A. BUILD THE BASIC 1" HEADER SECTION ASSEMBLIES, ITEMS 3 & 4 (TOTAL OF 10 EA.) INCLUDING WELDED GLAND FITTINGS, ITEM 15 AND ¼" WELD STUBS, ITEM 30 WITH FEMALE NUTS, ITEM 16 (40 EA.) AS SHOWN ON SHT. 3.
    B. PERFORM HELIUM MASS SPEC TESTING ON EACH HEADER SECTION (1X10E-9 SCCS MAXIMUM LEAKAGE). (USE COPPER GASKETS, ¼" PLUGS, 1" PLUG AND 1" CAP).
    C. FINISH PRE-FAB OF SPECIFIED HEADER SECTIONS BY ADDING MODIFIED VCR TEES, ITEM 31 (2EA.) AND END CAPS, ITEM 8 (4 EA.) IN LOCATIONS SHOWN ON SHEET 2.
    D. NUMBER THE HEADER SECTIONS: UPPER (1-5) AND LOWER (1-5). PACKAGE, PROTECT, AND SET ASIDE UNTIL INSTALLATION.
    E. PRE-BEND THE ¼" COOLING TUBES, ITEM 18 (40 EA.) PER ENGINEERING INSTRUCTION (EACH TUBE MUST FIT THROUGH THE MANWAY).
    F. BUILD THE COOLING TUBE ASSEMBLIES, ITEMS 5 & 6 (40 TOTAL).
    G. PERFORM HELIUM MASS SPEC TESTING ON EACH COOLING TUBE ASSEBLY (1X10E-9 SCCS MAXIMUM LEAKAGE). USE COPPER GASKETS AND ¼" PLUG AND ¼" CAP. COOLING TUBE LEAK TESTING CAN BE DONE IN CONJUNCTION WITH THE HEADER SECTIONS LEAK TESTING.
    H. LASER DRILL VCR BLIND GASKETS, (ITEM 33) WITH ORIFICE SIZES SHOWN IN TABLE ON SHT. 13 PRIOR TO INSTALLATION OF COOLING TUBE ASSEMBLIES, ITEMS 5 & 6.
29. ASSEMBLY SEQUENCE:
    A. FOLLOW APPROVED PROCESSES FOR WORKING AT HEIGHTS, CONFINED SPACE ENTRY, AND MAINTAINING CLEANLINESS OF INNER VESSEL.
    B. PASS ALL PARTS AND MATERIALS THROUGH THE MANWAY AND STAGE INSIDE THE TANK.
    C. INSTALL EYE BOLTS TO STIFFENING RINGS.
    D. ADD 25% FULL AND 75% FULL MARKS TO STIFFENING RINGS.
    E. ASSEMBLE THE HEADERS (UPPER AND LOWER). FOLLOW MANUFACTURER'S INSTRUCTIONS FOR THE HANDLING, INSTALLATION, AND TIGHTENING OF ALL SWAGELOK VCR FITTINGS. DO NOT TOUCH SEALING SURFACES. TAKE CARE TO VISUALLY VERIFY PROPER ALIGNMENT OF EACH SEAL AND MATING SURFACES WHEN JOINING FITTING HALVES.
    F. SUSPEND AND LEVEL THE UPPER HEADER AT THE APPROXIMATE 75% FULL MARK USING SST WIRE SUPPORTS (VERTICAL) PER DRAWING.
    G. SUSPEND AND LEVEL THE LOWER HEADER AT THE APPROXIGMATE 25% FULL MARK USING SST WIRE SUPPORTS (VERTICAL) PER DRAWING.
    H. INSTALL COOLING TUBE ASSEMBLIES STARTING AT THE FAR END USING ORIFICE GASKETS, ITEM 33 IN LOCATIONS SHOWN IN TABLE ON SHT. 13.
    I. PERFORM FINAL LEVEL ADJUSTMENTS TO HEADERS AND ADD MORE SST WIRE SUPPORTS (VERTICAL), OR DOUBLERS, IF REQUIRED PER ENGINEERING INSTRUCTIONS. ADD MORE SST WIRE SUPPORTS (HORIZONTAL) PER DRAWING AND ENGINEERING INSTRUCTIONS.
    J. INSTALL FLEXHOSES AND CAP AND SECURE ENDS UNTIL TIME TO CONNECT TO MANWAY PLUG FEEDTHROUGH.
30. TESTING:
    A. PURGE SYSTEM AND VERIFY CLEAN AND DRY END TO END.
    B. PERFORM PRESSURE DECAY TEST OF COMPLETED HX ASSEMBLY USING 50 PSIG GASEOUS NITROGEN. THIS TEST SHOULD BE PERFORMED BEFORE MANWAY PLUG IS LOWERED INTO PLACE.
    C. PERFORM HELIUM MASS SPEC LEAK TEST OF TOTAL SYSTEM TO LEVEL 1X10E-8 SCCS THIS TEST SHOULD BE PERFORMED BEFORE MANWAY PLUG IS LOWERED INTO PLACE. ALTERNATIVELY, THIS TEST COULD BE PERFORMED IN CONJUNCTION WITH TANK EVACUATION TEST.

TEMPERATURE SENSOR RAKES:

31. ENGINEERING SHALL INSPECT RAKE ASSEMBLYS AGAINST DRAWINGS DIMENSIONS AS SHOWN PRIOR TO INSTALLATION IN TANK.
32. ENGINEERING SHALL VERIFY THAT PROPER DRAINAGE AND VENT PATHS ARE PROVIDED ON ALL SQUARE ALUMINUM TUBING SECTIONS TO AVOID POTENTIAL FOR TRAPPED CRYOGENIC LIQUIDS.
33. ROUTE ALL SILICON DIODE LEAD WIRES THRU TOP OF VERTICAL SQ. ALUMINUM TUBES.
34. ALL RAKES ARE PRE-ASSEMBLED WITH SILICON DIODES BONDED IN-PLACE AND TESTED PRIOR TO INSTALLATION IN TANK.
35. FOR RAKES WITH HORIZONTAL TUBES, TUBES SHALL BE TEMPORARILY UNBOLTED AND FOLDED TOWARDS THE VERTICAL RAKES TO ALLOW PASSAGE THRU TANK MANWAY. EXTRA CABLE SLACK SHALL BE PROVIDED TO ACCOMMODATE UNFOLDING SENSOR RAKES #1 AND #3.
36. COAT ALL THROUGH HOLES WHERE DIODE CABLES ARE PULLED WITH LIQUID TEFLON OR EQUIVALENT. USE OF SHORT SHRINK-WRAP CABLE HARNESSES TO PROTECT CABLE INSULATION FROM DAMAGE MAY ALTERNATIVELY BE USED.

PRELIMINARY 03/04/2013

CAD MAINTAINED. CHANGES SHALL BE INCORPORATED ONLY BY THE DESIGN ACTIVITY.

SOFTWARE: PRO/ENGINEER
FILENAME: GODU_LH2
MATERIAL:
HEAT TREATMENT:
FINAL PROTECTIVE FINISH:

NEXT ASSY | USED ON
APPLICATION

UNLESS OTHERWISE SPECIFIED DIMENSIONS ARE IN INCHES. INTERPRET DIMENSIONS AND TOLERANCES PER ASME Y14.5M-1994. TOLERANCES ON:

FRACTIONS	DECIMALS	ANGLES
±1/16	1 PL ±.060 2 PL ±.030 3 PL ±.010	1 PL ±.1°

THIRD ANGLE PROJECTION

ORIGINAL DATE OF DRAWING (YY/MM/DD) 12/05/14
DRAWN T. BONNER | CHECKED
ENGINEER T. BONNER | CHECKER
ENGINEER T. TOMSIK | STRESS
ENGINEER J. FESMIRE
SUBMITTED W. NOTARDONATO
APPROVED

NOTES

JOHN F. KENNEDY SPACE CENTER, NASA
KENNEDY SPACE CENTER, FLORIDA

GODU LH2
DEMONSTRATION UNIT,
GROUND OPERATIONS,
LIQUID HYDROGEN,

SIZE C | CAGE CODE 22264 | DWG NO 79K38598 | REV
SCALE NOTED | UNIT WEIGHT | SHEET 12 OF

DWG NO 79K38598 SHEET 12 REV

KSC FORM 21-9 KS (8/08)

NOTICE - WHEN GOVERNMENT DRAWINGS, SPECIFICATIONS, OR OTHER DATA ARE USED FOR ANY PURPOSE OTHER THAN IN CONNECTION WITH A DEFINITELY RELATED GOVERNMENT PROCUREMENT OPERATION, THE UNITED STATES GOVERNMENT THEREBY INCURS NO RESPONSIBILITY NOR ANY OBLIGATION WHATSOEVER; AND THE FACT THAT THE GOVERNMENT MAY HAVE FORMULATED, FURNISHED, OR IN ANY WAY SUPPLIED THE SAID DRAWINGS, SPECIFICATIONS OR OTHER DATA IS NOT TO BE REGARDED BY IMPLICATION OR OTHERWISE AS IN ANY MANNER LICENSING THE HOLDER OR ANY OTHER PERSON OR CORPORATION, OR CONVEYING ANY RIGHTS OR PERMISSION TO MANUFACTURE, USE, OR SELL ANY PATENTED INVENTION THAT MAY IN ANY WAY BE RELATED THERETO.

ORIFICE GASKET SIZE CHART (ITEM 33)

TUBE LOCATION	ORIFICE SIZE

REVISION HISTORY

PART NO.	ZONE	REV	DESCRIPTION	DATE	APPROVAL

-10	-9	-8	-7	-6	-5	-4	-3	-2	-1	ZONE	FIND NO OR ITEM NO	MFR CODE	PART OR STOCK NO	DESCRIPTION	STOCK SIZE	MATERIAL SPEC	FINISH CODE	UNIT WT
			6								23			PLATE, CONNECTION, STIFFENING RING		304 SST		
			3								22			RING SECTION, STIFFENING RING	C5 X 6.7 CHANNEL	304 SST		
			-						9		21		79K38598-7	STIFFENING RING ASSEMBLY				
									1		20			FLEX HOSE, VCR, RETURN	1"			
									1		19			FLEX HOSE, VCR, FEED	1"			
				1	1						18			TUBE, COOLING	Ø1/4" O.D. X .035 WALL X 240"	304/304L SST		
					2						17		SS-4-VCR-4	NUT, VCR MALE	1/4"	316 SST		
				2		8	8				16		SS-4-VCR-1	NUT, VCR FEMALE	1/4"	316 SST		
				2	2	8	8				15		6LV-4-VCR-3S-4TB7	GLAND FITTING, VCR SHORT TUBE BUTT WELD	1/4"	316 SST		
						1	1				14		SS-16-VCR-1	NUT, VCR FEMALE	1"	316 SST		
						1	1				13		SS-16-VCR-4	NUT, VCR MALE	1"	316 SST		
						2	2				12		6LV-16-VCR-3-16TB7	GLAND FITTING, VCR LONG TUBE BUTT WELD	1"	316 SST		
						1	1				11			TUBE, HEADER	Ø1.00" O.D. X 144" LONG	304/304L SST		
								48			10		NI-4-VCR-2-GR	GASKET, VCR	1/4"	NICKEL WITH SILVER PLATE		
								14	4		9		NI-16-VCR-2-GR	GASKET, VCR	1"	NICKEL WITH SILVER PLATE		
								4			8		SS-16-VCR-CP	CAP, VCR FEMALE	1"	316 SST		
								2			7		SS-16-VCR-T	UNION TEE, VCR	1"	316 SST		
				-				2			6		79K38598-6	COOLING TUBE, HEAT EXCHANGER				
					-			38			5		79K38598-5	COOLING TUBE, HEAT EXCHANGER				
						-		2			4		79K38598-4	HEADER MANIFOLD BOTTOM, HEAT EXCAHANGER				
							-	8			3		79K38598-3	HEADER MANIFOLD TOP, HEAT EXCAHANGER				
									1		2		EMI-DZ110PFS00	MANWAY PLUG				
								-	1		1		79K38598-2	HEAT EXCHANGER				
									-				79K38598-1	LH2 GROUND OPERATIONS DEMONSTRATION UNIT				

ASSY DASH NO AND NO REQ

13

PARTS LIST

PRELIMINARY 03/04/2013

CAD MAINTAINED. CHANGES SHALL BE INCORPORATED ONLY BY THE DESIGN ACTIVITY.

SOFTWARE: PRO/ENGINEER
FILENAME: GODU_LH2
MATERIAL:
HEAT TREATMENT:
FINAL PROTECTIVE FINISH:

NEXT ASSY | USED ON
APPLICATION

UNLESS OTHERWISE SPECIFIED DIMENSIONS ARE IN INCHES. INTERPRET DIMENSIONS AND TOLERANCES PER ASME Y14.5M-1994. TOLERANCES ON:

FRACTIONS	DECIMALS	ANGLES
±1/16	1 PL ±.060 2 PL ±.030 3 PL ±.010	1 PL ±.1°

THIRD ANGLE PROJECTION

ORIGINAL DATE OF DRAWING (YY/MM/DD) 12/05/14

DRAFTSMAN: T. BONNER | CHECKER
ENGINEER: T. BONNER | CHECKER
ENGINEER: T. TOMSIK | STRESS
ENGINEER: J. FESMIRE
SUBMITTED: W. NOTARDONATO
APPROVED

JOHN F. KENNEDY SPACE CENTER, NASA
KENNEDY SPACE CENTER, FLORIDA

GODU LH2
DEMONSTRATION UNIT,
GROUND OPERATIONS,
LIQUID HYDROGEN,

SIZE: C | CAGE CODE: 22264 | DWG NO: 79K38598 | REV
SCALE: NOTED | UNIT WEIGHT | SHEET 13 OF

79K38598 SHEET 13 REV

KSC FORM 21-5 KS (09/00)

NOTICE - WHEN GOVERNMENT DRAWINGS, SPECIFICATIONS, OR OTHER DATA ARE USED FOR ANY PURPOSE OTHER THAN IN CONNECTION WITH A DEFINITELY RELATED GOVERNMENT PROCUREMENT OPERATION, THE UNITED STATES GOVERNMENT THEREBY INCURS NO RESPONSIBILITY NOR ANY OBLIGATION WHATSOEVER; AND THE FACT THAT THE GOVERNMENT MAY HAVE FORMULATED, FURNISHED, OR IN ANY WAY SUPPLIED THE SAID DRAWINGS, SPECIFICATIONS OR OTHER DATA IS NOT TO BE REGARDED BY IMPLICATION OR OTHERWISE, AS IN ANY MANNER LICENSING THE HOLDER OR ANY OTHER PERSON OR CORPORATION, OR CONVEYING ANY RIGHTS OR PERMISSION TO MANUFACTURE, USE, OR SELL ANY PATENTED INVENTION THAT MAY IN ANY WAY BE RELATED THERETO.

REVISION HISTORY

PART NO.	ZONE	REV	DESCRIPTION	DATE	APPROVAL

	-10	-9	-8	-7	-6	-5	-4	-3	-2	-1	ZONE	FIND NO OR ITEM NO	MFR CODE	PART OR STOCK NO	DESCRIPTION	STOCK SIZE	MATERIAL SPEC	FINISH CODE	UNIT WT
11	12	12	14									47		97447A145	POP RIVETS	1/8" x .501"-.625"	ALUMINUM		
	6	6	7							1		46			TEMP SENSOR MOUNT, G10	1.50 X 1.50 X .50	G10 SHEET		
	1		1									45			HORIZONTAL TUBE, TOP	1.50 X 1.50 X .125 WALL	ALUMINUM		
	1		1									44			HORIZONTAL TUBE, MIDDLE	1.50 X 1.50 X .125 WALL	ALUMINUM		
	1		1									43			HORIZONTAL TUBE, BOTTOM	1.50 X 1.50 X .125 WALL	ALUMINUM		
	1											42			VERTICAL TUBE, SENSOR RAKE 3	1.50 X 1.50 X .125 WALL	ALUMINUM		
		1										41			VERTICAL TUBE, SENSOR RAKE 2	1.50 X 1.50 X .125 WALL	ALUMINUM		
			1									40			VERTICAL TUBE, SENSOR RAKE 1	1.50 X 1.50 X .125 WALL	ALUMINUM		
	-									1		39		79K38598-10	TEMPERATURE SENSOR RAKE 3				
		-								1		38		79K38598-9	TEMPERATURE SENSOR RAKE 2				
			-							1		37		79K38598-8	TEMPERATURE SENSOR RAKE 1				
11									4			36		92320A028	SPACER	Ø3/16" X 1.00"	304 SST		
15	6	6	7						4	1		35		Si-410	TEMPERATURE SENSOR, SILCON DIODE				
14									4			34		PL-36-A-4-G	GLAND SEAL, W/STD. CAP	1/4' MNPT	316 SST		
									40			33		NI-4-VCR-2-GR-BL	GASKET, VCR, BLIND	1/4"	NICKEL WITH SILVER PLATE		
									4			32		SS-4-WVR-7-4	ADAPTER, VCR FEM TO NPT FEM	1/4" VCR X 1/4" NPT	316 SST		
									4			31		SS-4-VCR-T	UNION TEE, VCR		316 SST		
							8					30			EXTENSION TUBE, VCR FITTING	Ø.250 X 5.0	316 SST		
										A/R		29			LOCK WIRE	Ø.038	304 SST		
	6		6	28								28			NUT, HEX	1/4-20	304 SST		
11				28								27		33045T77	EYEBOLT, HEAT EXCHANGER HANGER	3/4 X 2-3/8 X 1/4"-20	304 SST		
				24								26			WASHER, PLAIN FLAT	1/2-13	304 SST		
				12								25			NUT, HEX	Ø1/2-13	304 SST		
				12								24			BOLT, HEX	Ø1/2-13	304 SST		

ASSY DASH NO AND NO REQ

PARTS LIST

PRELIMINARY 03/04/2013

CAD MAINTAINED. CHANGES SHALL BE INCORPORATED ONLY BY THE DESIGN ACTIVITY.

SOFTWARE: PRO/ENGINEER
FILENAME: GODU_LH2
MATERIAL:
HEAT TREATMENT:
FINAL PROTECTIVE FINISH:

NEXT ASSY | USED ON
APPLICATION

UNLESS OTHERWISE SPECIFIED DIMENSIONS ARE IN INCHES. INTERPRET DIMENSIONS AND TOLERANCES PER ASME Y14.5M-1994. TOLERANCES ON:

FRACTIONS	DECIMALS	ANGLES
±1/16	1 PL ±.060 2 PL ±.030 3 PL ±.010	1 PL ±.1°

THIRD ANGLE PROJECTION

ORIGINAL DATE OF DRAWING (YY/MM/DD) 12/05/14
DRAFTSMAN: T. BONNER | CHECKER:
ENGINEER: T. BONNER | CHECKER:
ENGINEER: T. TOMSIK | STRESS:
ENGINEER: J. FESMIRE
SUBMITTED: W. NOTARDONATO
APPROVED:

JOHN F. KENNEDY SPACE CENTER, NASA
KENNEDY SPACE CENTER, FLORIDA

GODU LH2
DEMONSTRATION UNIT,
GROUND OPERATIONS,
LIQUID HYDROGEN,

SIZE	CAGE CODE	DWG NO	REV
C	22264	79K38598	
SCALE: NOTED		UNIT WEIGHT	SHEET 14 OF

DWG NO 79K38598 SHEET 14 REV

NSC FORM 21-2 NS (8/88)

NOTICE - NEW GOVERNMENT DRAWINGS, SPECIFICATIONS, OR OTHER DATA ARE ISSUED FOR ANY PURPOSE OTHER THAN IN CONNECTION WITH A DEFINITELY RELATED GOVERNMENT PROCUREMENT OPERATION, THE UNITED STATES GOVERNMENT THEREBY INCURS NO RESPONSIBILITY NOR ANY OBLIGATION WHATSOEVER; AND THE FACT THAT THE GOVERNMENT MAY HAVE FORMULATED, FURNISHED, OR IN ANY WAY SUPPLIED THE SAID DRAWINGS, SPECIFICATIONS OR OTHER DATA IS NOT TO BE REGARDED BY IMPLICATION OR OTHERWISE AS IN ANY MANNER LICENSING THE HOLDER OR ANY OTHER PERSON OR CORPORATION, OR CONVEYING ANY RIGHTS OR PERMISSION TO MANUFACTURE, USE, OR SELL ANY PATENTED INVENTION THAT MAY IN ANY WAY BE RELATED THERETO.

REVISION HISTORY

PART NO.	ZONE	REV	DESCRIPTION	DATE	APPROVAL

	-10	-9	-8	-7	-6	-5	-4	-3	-2	-1	ZONE	FIND NO OR ITEM NO	MFR CODE	PART OR STOCK NO	DESCRIPTION	STOCK SIZE	MATERIAL SPEC	FINISH CODE	UNIT WT
										20		57			WASHER, FLAT	1-1/4	304 SST		
										20		56			HEX NUT	1-1/4-7	304 SST		
										20		55			HEX BOLT	1-1/4-7 X 5.0	304 SST		
	3		3									54			PLATE, RAKE TUBE MOUNT	3.50 X 1.50 X .125	ALUMINUM		
16	A/R	A/R	A/R									53			STYCAST 2850 EPOXY				
										6		52			WASHER, FLAT	5/16"	304 SST		
										6		51			HEX NUT	5/16-18	304 SST		
	12		12									50			WASHER, FLAT	1/4"	304 SST		
	6		6									49			HEX BOLT	1/4-20 X 2.25"	304 SST		
12										6		48		12512	HOOK BOLT	5/16-18 X 5"	304 SST		

ASSY DASH NO AND NO REQ

PARTS LIST

CAD MAINTAINED. CHANGES SHALL BE INCORPORATED ONLY BY THE DESIGN ACTIVITY.

SOFTWARE: PRO/ENGINEER
FILENAME: GODU_LH2
MATERIAL:
HEAT TREATMENT:
FINAL PROTECTIVE FINISH:

NEXT ASSY | USED ON
APPLICATION

UNLESS OTHERWISE SPECIFIED DIMENSIONS ARE IN INCHES. INTERPRET DIMENSIONS AND TOLERANCES PER ASME Y14.5M-1994. TOLERANCES ON:

FRACTIONS	DECIMALS	ANGLES
±1/16	1 PL ±.060 2 PL ±.030 3 PL ±.010	1 PL ±.1°

THIRD ANGLE PROJECTION

ORIGINAL DATE OF DRAWING (YY/MM/DD) 12/05/14

DRAFTSMAN: T. BONNER
CHECKER:
ENGINEER: T. BONNER
CHECKER:
ENGINEER: T. TOMSIK
STRESS:
ENGINEER: J. FESMIRE
SUBMITTED: W. NOTARDONATO
APPROVED:

JOHN F. KENNEDY SPACE CENTER, NASA
KENNEDY SPACE CENTER, FLORIDA

GODU LH2
DEMONSTRATION UNIT,
GROUND OPERATIONS,
LIQUID HYDROGEN,

SIZE: C | CAGE CODE: 22264 | DWG NO: 79K38598 | REV:
SCALE: NOTED | UNIT WEIGHT: | SHEET 15 OF 15

PRELIMINARY 03/04/2013

NSC FORM 21-5 NS (8/00)