DWG NO. A231-1300- G001 | SH. | REV.

NATIONAL AERONAUTICS AND SPACE ADMINISTRATION
AMES RESEARCH CENTER

N231
ARC JET COMPLEX BOILER PLANT

REPLACE ARC JET COMPLEX STEAM VACUUM SYSTEM BOILER

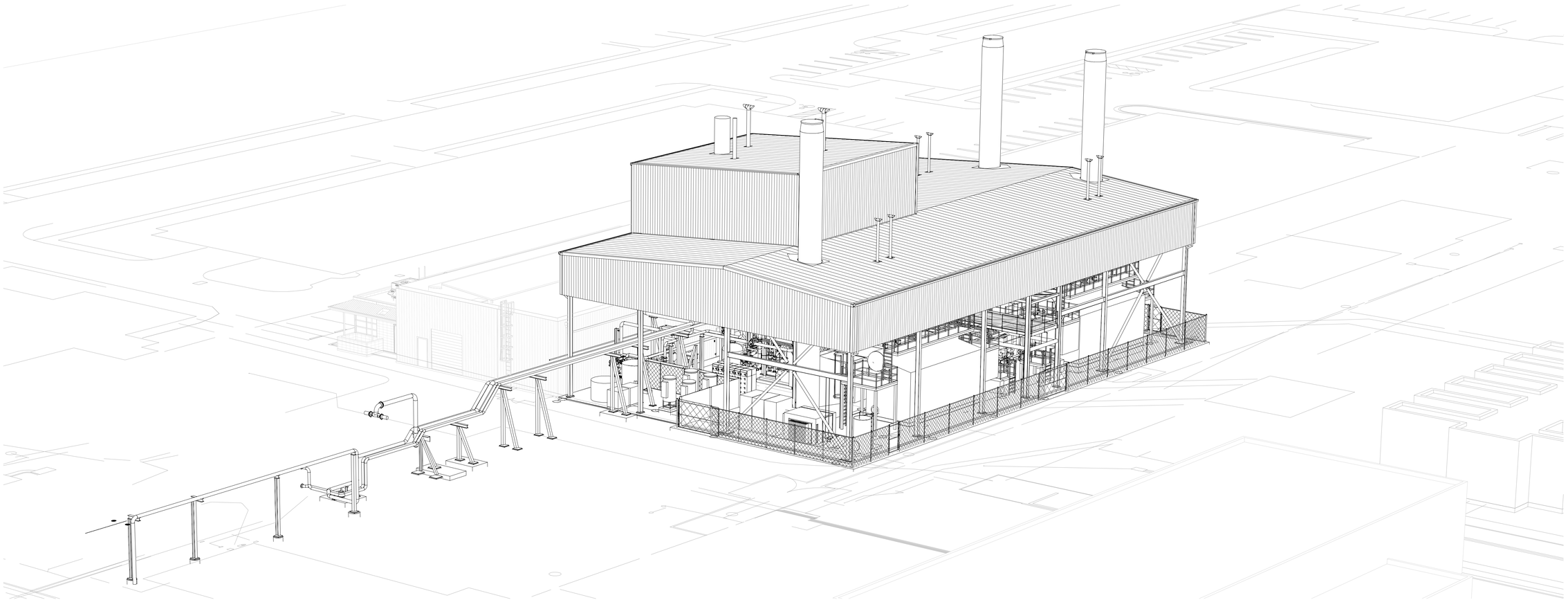

LOOKING FROM NORTH EAST

Ames Research Center

ZONE	LETTER	DESCRIPTION	DRAWN	DATE	Approver APPRVD

REVISIONS

DRAWN P. ALDEN	DATE	Ames Research Center Moffett Field, California
DESIGNED P.ALDEN	DATE	
CHECKED G.HITE	DATE	REPLACE ARC JET COMPLEX SVS BOILER GENERAL
A&E PM G.HITE	DATE	
NASA PM W.LEE	DATE	COVER SHEET
REQUESTER G.RAICHE	DATE	
R&QA	DATE	
SAFETY/PSM	DATE	SIZE D · CAGE CODE 25307 · A 231-1300- G001 · REV
SUPERVISOR S. FRANKEL	DATE	SCALE: NOT TO SCALE · INDEX · SHEET · OF

REGISTERED PROFESSIONAL ENGINEER GREGORY JAMES HITE No. C70284 CIVIL STATE OF CALIFORNIA

FILE NAME: 60212932_SVS-Boiler Plant_Genl-CENTRAL.rvt 12/12/12

AECOM: 60212932.0001

C:\Users\rschart1\Documents\Revit\2011\60212932_SVS-Boiler Plant_Genl-CENTRAL_palden.rvt
1/29/2013 10:33:49 AM

DWG NO. A231-1300- G002 | SH. | REV.

DRAWING INDEX

GENERAL	TITLE
A231-1300-G001	COVER SHEET
A231-1300-G002	DRAWING INDEX
A231-1300-G003	LOCATION MAP
A231-1300-G004	SITE PLAN
A231-1300-G005	GENERAL NOTES AND SYMBOLS
A231-1300-G006	BID OPTION PLAN
A231-1300-G007	BOILER PLANT ILLUSTRATIONS
A231-1300-G008	BOILER PLANT PIPING ILLUSTRATIONS

SURVEY	TITLE
A231-1300-V001	SURVEY CONTROL GENERAL NOTES, LEGEND, SYMBOLS AND ABBREVIATIONS
A231-1300-V101	SURVEY CONTROL
A231-1300-V201	EXISTING TOPOGRAPHY

CIVIL	TITLE
A231-1300-C001	CIVIL NOTES AND LEGEND
A231-1300-C101	DEMOLITION PLAN
A231-1300-C102	SITE PERIMETER FENCE LAYOUT
A231-1300-C103	GRADING AND DRAINAGE PLAN SVS BOILER PLANT
A231-1300-C104	GRADING AND DRAINAGE PLAN N231 PARKING LOT
A231-1300-C105	BUILDING N231 ADA PARKING PLAN
A231-1300-C106	COMPOSITE UTILITY RELOCATION PLAN
A231-1300-C107	NATURAL GAS LINE LAYOUT
A231-1300-C108	STORM WATER POLLUTION PREVENTION AND BEST MANAGEMENT PRACTICES PLAN
A231-1300-C109	TEMPORARY TRAFFIC CONTROL PLAN
A231-1300-C301	SECTIONS
A231-1300-C302	WATER AND SANITARY SEWER PLAN AND PROFILE VIEW
A231-1300-C501	DETAILS
A231-1300-C502	DETAILS
A231-1300-C503	DETAILS
A231-1300-C504	DETAILS
A231-1300-C505	DETAILS

ARCHITECTURAL	TITLE
A231-1300-A001	ARCHITECTURAL GENERAL NOTES, SYMBOLS AND ABBREVIATIONS
A231-1300-A002	SITE AND EGRESS PLAN
A231-1300-A101	OFFICE AND HIGHBAY DEMOLITION PLAN
A231-1300-A102	OFFICE AND HIGHBAY FLOOR PLAN
A231-1300-A103	OFFICE AND HIGHBAY ROOF PLAN
A231-1300-A104	BOILER AREA PLAN
A231-1300-A105	BOILER AREA WALKWAY AND PLATFORMS PLAN
A231-1300-A106	CANOPY REFLECTED CEILING PLAN
A231-1300-A107	CANOPY ROOF PLAN
A231-1300-A301	EXTERIOR ELEVATIONS
A231-1300-A302	EXTERIOR ELEVATIONS
A231-1300-A303	CANOPY SECTIONS
A231-1300-A304	CANOPY SECTIONS
A231-1300-A501	OFFICE AND HIGHBAY PARTIAL FLOOR PLANS
A231-1300-A502	INTERIOR ELEVATIONS AND DETAILS
A231-1300-A503	BOILER AREA ENLARGED EQUIPMENT, WALKWAY AND PLATFORM PLANS
A231-1300-A504	BOILER AREA EQUIPMENT PLATFORM AND STAIR SECTIONS
A231-1300-A601	EXTERIOR DETAILS
A231-1300-A602	EXTERIOR DETAILS
A231-1300-A701	INTERIOR DETAILS

STRUCTURAL	TITLE
A231-1300-S001	GENERAL NOTES & ABBREVIATIONS
A231-1300-S002	QUALITY CONTROL, TESTS AND INSPECTIONS
A231-1300-S101	SPHERE 6 CONCRETE DEMOLITION PLAN AND DETAILS
A231-1300-S102	FOUNDATION PLAN
A231-1300-S103	CANOPY ROOF FRAMING PLAN
A231-1300-S104	CANOPY HIGH ROOF FRAMING PLAN
A231-1300-S105	WALKWAY AND PIPE SUPPORT FRAMING PLAN
A231-1300-S106	DEAERATOR FRAMING PLANS MAIN DECK
A231-1300-S107	DEAERATOR FRAMING PLANS HIGH DECK
A231-1300-S108	PARTIAL ROOF FRAMING PLAN
A231-1300-S109	PIPE SUPPORT FOUNDATION PLAN
A231-1300-S201	CANOPY ELEVATIONS
A231-1300-S202	CANOPY ELEVATIONS
A231-1300-S203	CANOPY UPPER ROOF ELEVATIONS
A231-1300-S204	DEAERATOR PLATFORM ELEVATIONS
A231-1300-S205	DEAERATOR PLATFORM ELEVATIONS
A231-1300-S206	ELEVATION / SECTIONS
A231-1300-S301	FOUNDATION AND BASE PLATE DETAILS
A231-1300-S302	FOUNDATION AND BASE PLATE DETAILS
A231-1300-S303	FOUNDATION DETAILS
A231-1300-S501	TYPICAL CONCRETE DETAILS
A231-1300-S502	TYPICAL STEEL DETAILS
A231-1300-S503	TYPICAL DECK DETAILS
A231-1300-S504	CANOPY BRACING DETAILS
A231-1300-S505	DEAERATOR PLATFORM DETAILS
A231-1300-S506	DEAERATOR PLATFORM DETAILS
A231-1300-S507	DEAERATOR PLATFORM DETAILS
A231-1300-S508	DETAILS
A231-1300-S509	DETAILS
A231-1300-S510	DETAILS
A231-1300-S511	DETAILS

MECHANICAL	TITLE
A231-1300-M001	MECHANICAL LEGEND, SYMBOLS AND ABBREVIATIONS
A231-1300-M002	MECHANICAL GENERAL NOTES
A231-1300-M101	SVS STEAM, GAS AND SOFT WATER SITE PLAN AND ELEVATION (SHEET 1 OF 2)
A231-1300-M101	SVS STEAM, GAS AND SOFT WATER SITE PLAN AND ELEVATION (SHEET 2 OF 2)
A231-1300-M102	OVERALL PLAN
A231-1300-M103	OVERALL PLUMBING PLAN
A231-1300-M201	SITE DEMOLITION PLAN
A231-1300-M202	DEMOLITION PHOTOS
A231-1300-M301	SECTION - OVERALL EAST-WEST
A231-1300-M302	SECTION - OVERALL NORTH-SOUTH
A231-1300-M303	SECTIONS - TYPICAL BOILER
A231-1300-M304	SECTIONS - DEAERATOR
A231-1300-M305	SECTIONS - HPS
A231-1300-M401	PARTIAL PLAN - TYPICAL BOILER
A231-1300-M402	PARTIAL PLAN - PIPING TO SB-2 & SB-3 GROUND LEVEL
A231-1300-M403	PARTIAL PLAN - DEAERATOR EL. 20'-0" AFF
A231-1300-M404	PARTIAL PLAN - WATER SOFTENER
A231-1300-M405	PARTIAL PLAN - DEAERATOR EL. 13'-6" AFF
A231-1300-M406	PARTIAL PLAN - DEAERATOR UPPER LEVEL
A231-1300-M407	PARTIAL PLAN - PIPING TO SB-2 & SB-3 UPPER LEVEL
A231-1300-M408	PARTIAL PLANS N231 CONTROL ROOM & TOILET ROOMS
A231-1300-M501	PIPE SUPPORTS DETAILS
A231-1300-M502	PIPE SUPPORTS DETAILS
A231-1300-M503	NOT USED
A231-1300-M504	PIPE SUPPORTS DETAILS
A231-1300-M505	PIPE SUPPORTS DETAILS
A231-1300-M506	PIPE SUPPORTS DETAILS
A231-1300-M507	PIPE SUPPORTS DETAILS
A231-1300-M508	PIPE SUPPORTS DETAILS
A231-1300-M509	PIPE SUPPORTS DETAILS
A231-1300-M510	PIPE SUPPORTS DETAILS
A231-1300-M511	PIPE SUPPORTS DETAILS
A231-1300-M512	PIPE SUPPORTS DETAILS
A231-1300-M513	PIPE SUPPORTS DETAILS
A231-1300-M514	PIPE SUPPORTS DETAILS
A231-1300-M515	PIPE SUPPORTS DETAILS
A231-1300-M516	PIPE SUPPORTS DETAILS
A231-1300-M517	PIPE SUPPORTS DETAILS
A231-1300-M518	DETAILS
A231-1300-M601	EQUIPMENT SCHEDULES
A231-1300-M602	EQUIPMENT SCHEDULES
A231-1300-M603	PIPE SYSTEM AND INSULATION SCHEDULES
A231-1300-M701	DIAGRAM STEAM PIPING
A231-1300-M702	DIAGRAM FEEDWATER PIPING
A231-1300-M703	DIAGRAMS BLOWDOWN & CHEMICAL FEED PIPING
A231-1300-M704	DIAGRAMS BOILER & FEEDWATER PUMP
A231-1300-M705	DIAGRAMS MISCELLANEOUS
A231-1300-M706	DIAGRAM AMMONIA PIPING
A231-1300-M707	HVAC CONTROL DIAGRAMS
A231-1300-M801	PIPING ISOMETRIC - NH3 (SHEET 1 OF 2)
A231-1300-M801	PIPING ISOMETRIC - NH3 (SHEET 2 OF 2)
A231-1300-M802	PIPING ISOMETRIC - BD (SHEET 1 OF 2)
A231-1300-M802	PIPING ISOMETRIC - BD (SHEET 2 OF 2)
A231-1300-M803	PIPING ISOMETRIC - BFW (SHEET 1 OF 2)
A231-1300-M803	PIPING ISOMETRIC - BFW (SHEET 2 OF 2)
A231-1300-M804	PIPING ISOMETRIC - FWD
A231-1300-M805	PIPING ISOMETRIC - HPS (SHEET 1 OF 2)
A231-1300-M805	PIPING ISOMETRIC - HPS (SHEET 2 OF 2)
A231-1300-M806	PIPING ISOMETRIC - LPS
A231-1300-M807	PIPING ISOMETRIC - MPG (SHEET 1 OF 2)
A231-1300-M807	PIPING ISOMETRIC - MPG (SHEET 2 OF 2)
A231-1300-M808	PIPING ISOMETRIC - SCW (SHEET 1 OF 2)
A231-1300-M808	PIPING ISOMETRIC - SCW (SHEET 2 OF 2)

ELECTRICAL	TITLE
A231-1300-E001	ELECTRICAL NOTES
A231-1300-E002	ELECTRICAL SYMBOLS
A231-1300-E003	ELECTRICAL ABBREVIATIONS
A231-1300-E101	SITE PLAN
A231-1300-E102	UNDERGROUND DUCT BANK ROUTING PLAN
A231-1300-E103	OVERHEAD CONDUITS FOR COMMUNICATION AND CONTROL ROUTING PLAN
A231-1300-E201	BOILER AREA LIGHTING PLAN
A231-1300-E202	BOILER AREA POWER PLAN
A231-1300-E203	BOILER AREA GROUNDING PLAN
A231-1300-E204	OFFICE LIGHTING PLAN - DEMOLITION AND NEW WORK
A231-1300-E205	OFFICE AND CONTROL ROOM POWER PLAN - DEMOLITION AND NEW WORK
A231-1300-E206	CONTROL ROOM ROOF PLAN - DEMOLITION AND NEW WORK
A231-1300-E207	CONTROL ROOM VOICE AND DATA COMMUNICATION PLAN - NEW WORK
A231-1300-E208	OFFICE AND HIGHBAY SECURITY AND MONITORING SYSTEM PLAN - NEW WORK
A231-1300-E209	BOILER AREA SECURITY AND MONITORING SYSTEM PLAN
A231-1300-E210	OFFICE FIRE ALARM PLAN - DEMOLITION AND NEW WORK
A231-1300-E211	N234A DEMOLITION PLAN
A231-1300-E212	BOILER AREA EMERGENCY LIGHTING
A231-1300-E301	ENLARGED EQUIPMENT PLAN
A231-1300-E401	MCC1A AND MCC1B ELEVATION
A231-1300-E402	TRANSFORMER AND SWITCHGEAR ELEVATION
A231-1300-E501	PARTIAL SINGLE LINE DIAGRAM EXISTING / NEW WORK
A231-1300-E502	SINGLE LINE DIAGRAM - MCC
A231-1300-E503	PARTIAL THREE LINE DIAGRAM
A231-1300-E504	N234 AND N234A SINGLE LINE DIAGRAM - EXISTING / DEMOLITION
A231-1300-E601	LIGHTING FIXTURE AND FEEDER SCHEDULES
A231-1300-E602	EQUIPMENT NAMEPLATE AND MCC SCHEDULE
A231-1300-E603	PANEL SCHEDULES
A231-1300-E701	MISCELLANEOUS DETAILS
A231-1300-E702	MISCELLANEOUS DETAILS
A231-1300-E703	UNDERGROUND POWER DISTRIBUTION MANHOLE E114 DETAILS
A231-1300-E704	CARD READER DETAILS
A231-1300-E801	SWITCHGEAR-1 VCB 52F4 CONTROL RELAY ELEMENTARY DIAGRAM-EXISTING

INSTRUMENTATION & CONTROLS	TITLE
A231-1300-J001	INSTRUMENTATION LEGEND, SYMBOLS, GENERAL NOTES & ABBREVIATIONS
A231-1300-J101	CONTROL ROOM LAYOUT
A231-1300-J102	CONTROL PANEL AND INSTRUMENT LOCATION PLAN
A231-1300-J501	INSTALLATION DETAIL PRESSURE INSTRUMENTS, INSTRUMENT ABOVE TAP
A231-1300-J502	INSTALLATION DETAIL PRESSURE INSTRUMENTS, INSTRUMENT BELOW TAP
A231-1300-J503	INSTALLATION DETAIL PRESSURE GAUGES FOR STEAM SERVICE
A231-1300-J504	INSTALLATION DETAIL TURBINE FLOW METER
A231-1300-J505	INSTALLATION DETAIL DIFFERENTIAL PRESSURE SWITCH / GAUGE ACROSS STRAINER
A231-1300-J506	INSTALLATION DETAIL TEMPERATURE INSTRUMENTS CONNECTIONS, FLANGED
A231-1300-J507	INSTALLATION DETAIL TEMPERATURE INSTRUMENTS CONNECTIONS, THREADED
A231-1300-J508	INSTALLATION DETAIL DIFFERENTIAL PRESSURE TRANSMITTER WITH REMOTE DIAPHRAGMS
A231-1300-J509	INSTALLATION DETAIL FLANGED DIFFERENTIAL PRESSURE TYPE LEVEL TRANSMITTER
A231-1300-J510	INSTALLATION DETAIL DIFFERENTIAL TYPE LEVEL TRANSMITTER REMOTE FROM CONNECTIONS
A231-1300-J511	INSTALLATION DETAIL LEVEL SWITCHES ON A STAND PIPE HORIZONTAL VESSEL
A231-1300-J512	INSTALLATION DETAIL LEVEL GAUGES ON A STAND PIPE HORIZONTAL VESSEL, LOW PRESSURE
A231-1300-J513	INSTALLATION DETAIL DEAERATOR LEVEL GAUGE
A231-1300-J514	INSTALLATION DETAIL VORTEX FLOW TRANSMITTER
A231-1300-J515	INSTALLATION DETAIL FLOW SWITCHES
A231-1300-J516	INSTALLATION DETAIL WATER HARDNESS ANALYZER
A231-1300-J601	INSTRUMENT CABLE SCHEDULE
A231-1300-J602	CONTROL SYSTEM BLOCK DIAGRAM
A231-1300-J701	WATER CONDITIONING P&ID
A231-1300-J702	DEAERATOR AND FEEDWATER TANK P&ID
A231-1300-J703	CHEMICAL ADDITION P&ID
A231-1300-J704	CONTINUOUS BLOWDOWN AND SAMPLING P&ID
A231-1300-J705	INTERMITTENT BLOWDOWN P&ID
A231-1300-J706	FEEDWATER PUMPS P&ID
A231-1300-J707	STEAM DISTRIBUTION P&ID
A231-1300-J708	FORCED DRAFT FAN AND STACK NO 1 P&ID
A231-1300-J709	STEAM BOILER NO 1 P&ID
A231-1300-J710	FORCED DRAFT FAN AND STACK NO 2 P&ID
A231-1300-J711	STEAM BOILER NO 2 P&ID
A231-1300-J712	FORCED DRAFT FAN AND STACK NO 3 P&ID
A231-1300-J713	STEAM BOILER NO 3 P&ID
A231-1300-J714	NATURAL GAS AND COMPRESSED AIR P&ID
A231-1300-J715	ANHYDROUS AMMONIA SYSTEM P&ID
A234A-0900-J0001	(REFERENCE DRAWING) N234A STEAM VACUUM SYSTEM P&ID

REGISTERED PROFESSIONAL ENGINEER GREGORY JAMES HITE No. C70284 CIVIL STATE OF CALIFORNIA

ZONE	LETTER	DESCRIPTION	DRAWN	DATE	APPRVD

REVISIONS

DRAWN R.SCHAEFER	DATE	Ames Research Center Moffett Field, California
DESIGNED P.ALDEN	DATE	
CHECKED G.HITE	DATE	REPLACE ARC JET COMPLEX SVS BOILER GENERAL
A&E PM G.HITE	DATE	
NASA PM W.LEE	DATE	DRAWING INDEX
REQUESTER G.RAICHE	DATE	
R&QA	DATE	
SAFETY/PSM	DATE	SIZE D · CAGE CODE 25307 · A 231-1300- G002 · REV
SUPERVISOR S. FRANKEL	DATE	SCALE: NOT TO SCALE · INDEX · SHEET · OF

FILE NAME: 60212932_SVS-Boiler Plant_Genl-CENTRAL.rvt 12/12/12

C:\Users\rschaef1\Documents\Revit\2011\60212932_SVS-Boiler Plant_Genl-CENTRAL_palden.rvt
2/4/2013 12:32:39 PM

AECOM: 60212932.0001

DWG NO. A231-1300- G003 | SH. | REV.

LOCATION MAP

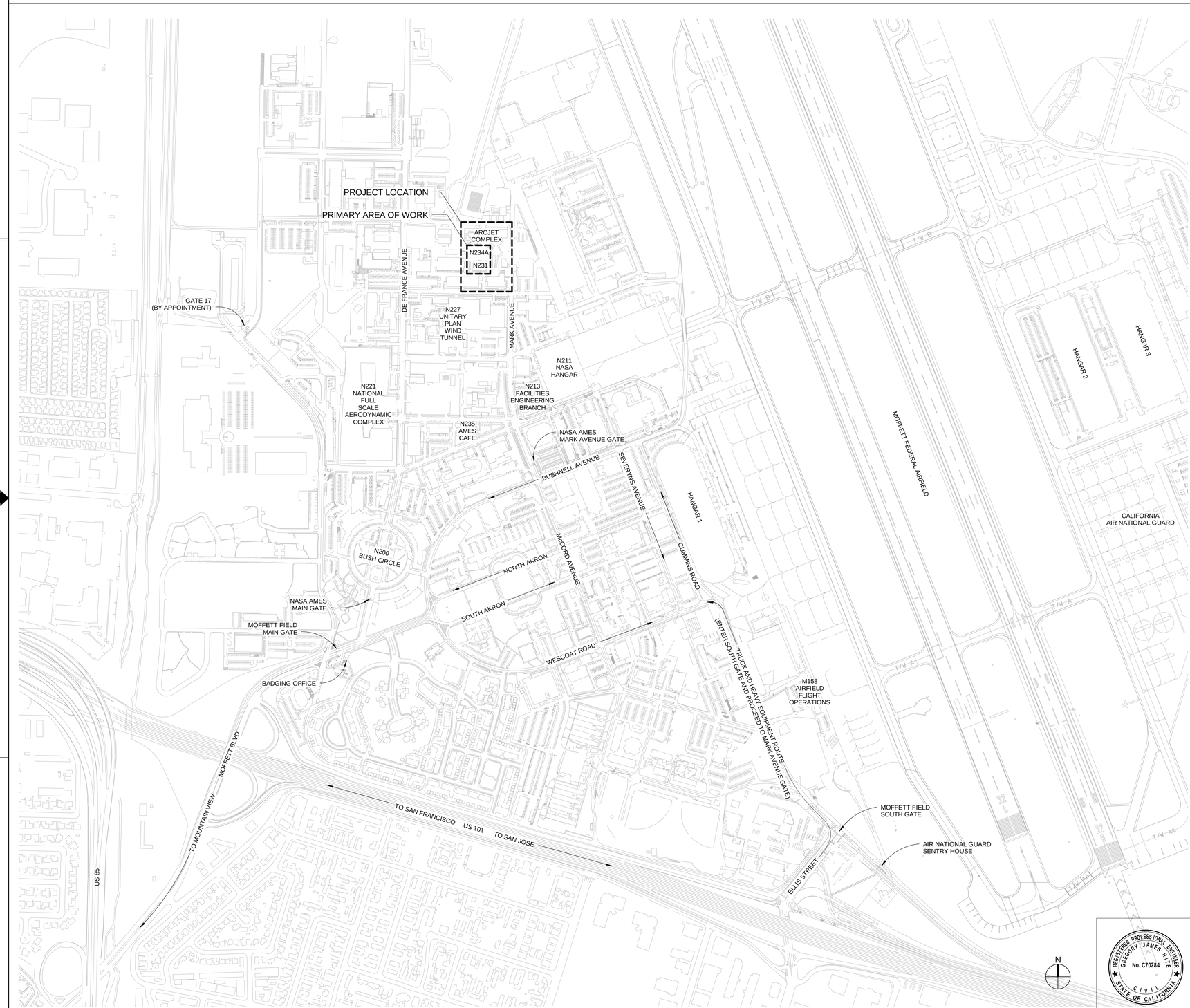

BUILDING INFORMATION

BUILDING N231

OCCUPANCY:	B
CONSTRUCTION TYPE:	III-N
NUMBER OF STORIES:	ONE (1)
FIRST FLOOR:	7,285 SQ. FT.
TOTAL BUILDING AREA (APROX.:	7,285 SQ. FT.

BUILDING N234A

OCCUPANCY:	B
CONSTRUCTION TYPE:	III-N
NUMBER OF STORIES:	THREE (3)
FIRST FLOOR:	2,030 SQ. FT.
SECOND FLOOR:	N/A
THIRD FLOOR:	N/A
TOTAL BUILDING AREA (APROX.:	2,030 SQ. FT.

REGISTERED PROFESSIONAL ENGINEER GREGORY JAMES NITE No. C70284 CIVIL STATE OF CALIFORNIA

ZONE	LETTER	DESCRIPTION	DRAWN	DATE	APPRVD

REVISIONS

DRAWN P.ALDEN	DATE
DESIGNED P.ALDEN	DATE
CHECKED G.HITE	DATE
A&E PM G.HITE	DATE
NASA PM W.LEE	DATE
REQUESTER G.RAICHE	DATE
R&QA	DATE
SAFETY/PSM	DATE
SUPERVISOR S. FRANKEL	DATE

Ames Research Center
Moffett Field, California

REPLACE ARC JET COMPLEX SVS BOILER
GENERAL

LOCATION MAP

SIZE	CAGE CODE		REV
D	25307	A 231-1300- G003	
SCALE: NOT TO SCALE		INDEX SHEET OF	

FILE NAME: 60212932_SVS-Boiler Plant_Genl-CENTRAL.rvt 12/12/12

AECOM: 60212932.0001

C:\Users\rschaef1\Documents\Revit\2011\60212932_SVS-Boiler Plant_Genl-CENTRAL_palden.rvt
1/29/2013 10:33:56 AM

DWG NO. A231-1300- G004 | SH. | REV.

SITE PLAN

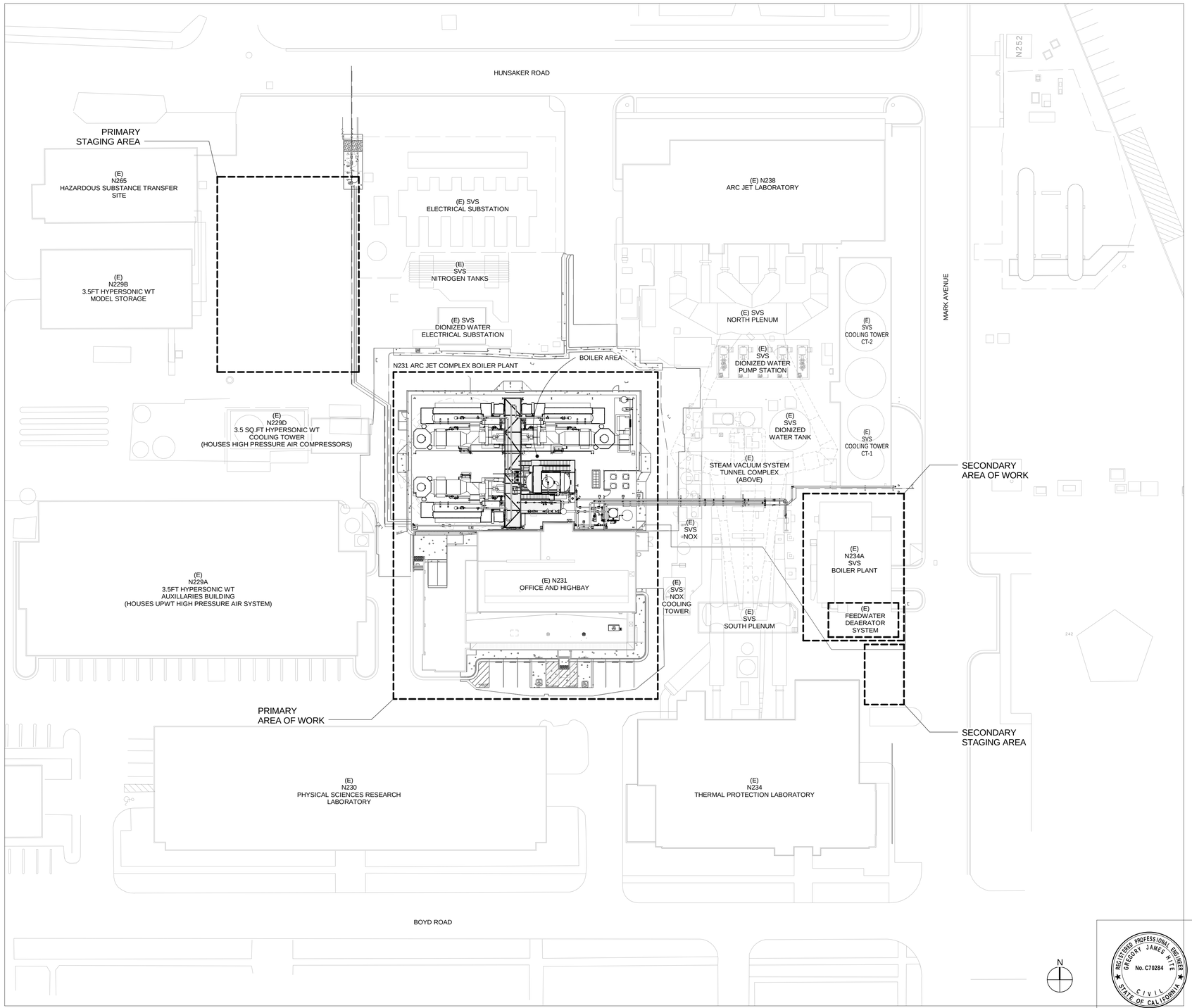

SCOPE OF WORK

THE BASE BID WORK INCLUDES:

1. THREE (3) LOW EMISSION, HIGH PRESSURE STEAM BOILERS.
2. DEAERATOR HEATER AND FEEDWATER TANK.
3. BOILER NOX REDUCTION SYSTEMS.
4. SUPPORTING AND CONNECTING PIPING.
5. BOILER PLANT CONTROLS.
6. OTHER MAJOR BOILER PLANT MECHANICAL EQUIPMENT, INCLUDING AUXILIARY BOILER, COMBUSTION AIR FAN, BOILER, FEEDWATER & CHEMICAL FEED PUMPS, BLOWDOWN RECOVERY HEAT EXCHANGER, BOILER MAKEUP WATER SOFTENER PACKAGE, FLOW MEASURING DEVICES, BACKFLOW PREVENTERS, STEAM TRAPS, FLASH TANKS, CONTROL VALVE STATION, PRESSURE REDUCING VALVE STATION, AND SAFETY VALVES.
7. REINFORCED CONCRETE SLAB FOUNDATION.
8. STRUCTURAL STEEL CANOPY COVERING THE FULL FOOTPRINT OF THE NEW BOILER PLANT.
9. PLATFORMS AND STAIRS FOR SERVICING BOILERS AND FEEDWATER/DEAERATOR TANK.
10. PARTIAL DEMOLITION AND REMOVAL OF NOX SPHERE NO. 6 FOUNDATIONS.
11. DEMOLITION OF SITE UTILITIES WITHIN BOUNDARY OF CONSTRUCTION.
12. DEMOLITION OF ROOM INTERIOR WITHIN NEW CONTROL ROOM IN N231.
13. ELECTRIC DISTRIBUTION SERVICE.
14. BOILER CONTROL ROOM IN BUILDING N231.
15. CONTROL ROOM LIGHTING, FIRE ALARM, SECURITY, DATA AND COMMUNICATION SYSTEMS.
16. GAS AND WATER UTILITIES.
17. EARTHWORK, INCLUDING GRADING AND DRAINAGE IMPROVEMENTS.
18. ASPHALT PAVEMENT SURROUNDING NEW BOILER PLANT FOUNDATION SLAB.
19. PERIMETER SITE FENCE WITH CONCRETE RAMPS, MANUAL SLIDING GATES AND CARD ACCESS MAN GATE.
20. SITE RESTORATION.
21. TRAFFIC CONTROL FOR STREETS AFFECTED BY CONSTRUCTION OPERATIONS.
22. COMPONENT AND SYSTEM TESTING.

THE OPTIONAL WORK INCLUDES:

SEE SHEET G006.

ZONE	LETTER	DESCRIPTION	DRAWN	DATE	Approver APPRVD

REVISIONS

DRAWN P.ALDEN	DATE	Ames Research Center Moffett Field, California
DESIGNED P.ALDEN	DATE	
CHECKED G.HITE	DATE	REPLACE ARC JET COMPLEX SVS BOILER GENERAL
A&E PM G.HITE	DATE	
NASA PM W.LEE	DATE	SITE PLAN
REQUESTER G.RAICHE	DATE	
R&QA	DATE	
SAFETY/PSM	DATE	SIZE D · CAGE CODE 25307 · A 231-1300- G004 · REV
SUPERVISOR S. FRANKEL	DATE	SCALE: 1/32" = 1'-0" · INDEX · SHEET · OF

REGISTERED PROFESSIONAL ENGINEER GREGORY JAMES HITE No. C70284 CIVIL STATE OF CALIFORNIA

FILE NAME: 60212932_SVS-Boiler Plant_Genl-CENTRAL.rvt 12/12/12

AECOM: 60212932.0001

\\n213hs2\proj\234A\60212932.0001 (K11027) Replace Arc-Ject Complex SVS Boiler Final Design\500 CAD\501 BIM\G\60212932_SVS-Boiler Plant_Genl-CENTRAL.rvt
3/25/2013 11:35:34 AM

GENERAL SYMBOLS

SEE DISCIPLINE SHEETS FOR SYMBOLS SPECIFIC TO THAT DISCIPLINE.

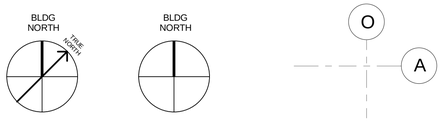

NORTH ARROW — GRID BUBBLES

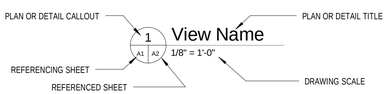

PLAN OR DETAIL TITLE

SCALE: 1/16" = 1'-0" — 16' 8' 0' 16' 32'

GRAPHIC SCALE

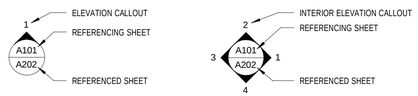

ELEVATION REFERENCE — INTERIOR ELEVATION REFERENCE

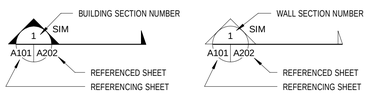

BUILDING SECTION REFERENCE — WALL SECTION REFERENCE

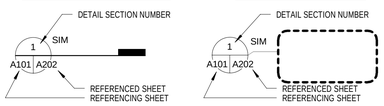

DETAIL SECTION REFERENCE — DETAIL CALLOUT REFERENCE

SPOT ELEVATION — LEVEL HEADS

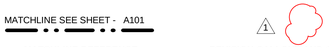

MATCHLINE REFERENCE — REVISION CALLOUT AND CLOUD

EXISTING

ARCHITECTURAL DEMOLITION

MEP DEMOLITION

NEW

LINETYPES

CODES AND STANDARDS

NOTE:
UON, ALL WORK SHALL BE IN ACCORDANCE WITH THE EDITION AS LISTED IN PROJECT DESIGN CRITERIA IF NOT SPECIFIED HERE OF THE CODES LISTED IN THE AMES PROCEDURAL REQUIREMENTS (APR 8829.1), INCLUDING, BUT NOT LIMITED TO THE FOLLOWING:

CALIFORNIA BUILDING CODE (CBC)
CALIFORNIA FIRE CODE (CFC)
CALIFORNIA MECHANICAL CODE (CMC)
CALIFORNIA PLUMBING CODE (CPC)
CALIFORNIA ENERGY CODE "TITLE 24" (CEC)
CALIFORNIA ELECTRICAL CODE (CEC)
CGA G-2.1/ANSI K61.1, REQUIREMENTS FOR STORAGE AND HANDLING OF ANHYDROUS AMMONIA (1999)
29 CFR 1910.111, STORAGE AND HANDLING OF ANHYDROUS AMMONIA
UNIFORM FEDERAL ACCESSIBILITY STANDARDS (UFAS)
NFPA 13, STANDARD FOR THE INSTALLATION OF SPRINKLER SYSTEMS
NFPA 55, COMPRESSED GASES AND CRYOGENIC FLUIDS (2013)
NFPA 72, NATIONAL FIRE ALARM AND SIGNALING CODE
NFPA 80, STANDARD FOR FIRE DOORS AND WINDOWS
NFPA 101, LIFE SAFETY CODE
NASA-STD-8719.11A, SAFETY STANDARD FOR FIRE PROTECTION
ANSI A117.1, ACCESSIBLE AND USABLE BUILDINGS AND FACILITIES STANDARDS (2009)
SMACNA HVAC DUCT CONSTRUCTION STANDARDS: METAL AND FLEXIBLE
SMACNA HVAC AIR DUCT LEAKAGE TEST MANUAL
SMACNA SEISMIC RESTRAINT MANUAL GUIDELINES FOR MECHANICAL SYSTEMS
APR 8715.1, AMES HEALTH AND SAFETY MANUAL
ASCE/SEI 7-05, MINIMUM DESIGN LOADS FOR BUILDINGS AND OTHER STRUCTURES (2005)
ASME B31.1 POWER PIPING (2010)
ASME B31.3 PROCESS PIPING (2010)
ASME B31.9 BUILDING SERVICES PIPING (2011)
ASME BPVC SECTION I, IV AND VIII (2010, WITH 2011 ADDENDUM)
BAAQMD REGULATION 9, RULE 7
SANTA CLARA COUNTY HAZARDOUS MATERIALS STORAGE ORDINANCE

PROJECT NOTES

1. THIS PROJECT HAS BEEN DESIGNED COMPLETELY IN IMPERIAL UNITS. ALL INSPECTIONS WILL TAKE PLACE IN IMPERIAL DIMENSIONS. SHOP DRAWINGS MUST BE SUBMITTED WITH IMPERIAL DIMENSIONS UNLESS OTHERWISE DIRECTED BY THE COR.

2. SUBMIT WRITTEN REQUESTS FOR MODIFICATIONS TO THE PLANS & SPECIFICATIONS TO THE COR.

3. NOTIFY COR OF ALL DISCREPANCIES AND OMISSIONS ON THE DRAWINGS, SPECIFICATIONS AND EXISTING CONDITIONS BEFORE PROCEEDING WITH ANY ELEMENT OF THIS PROJECT.

4. PRIOR TO BIDDING IT IS RECOMMENDED THE CONTRACTOR VISIT THE JOB SITE TO BECOME ACQUAINTED WITH THE EXISTING INSTALLATION AND SYSTEMS RELATED TO HIS WORK AND INCLUDE IN THE BID PROPOSAL ALL LABOR AND MATERIALS INCLUDING DESIGN SERVICES REQUIRED FOR THE INSTALLATION TO BE COMPLETE AND OPERATIONAL.

5. MAINTAIN AN UP-TO-DATE "AS-BUILT" DRAWING SET AT THE JOBSITE. THE "AS-BUILT" DRAWING SET SHALL BE "RED-LINED" TO SCALE TO REFLECT ALL APPROVED CHANGES TO THE DESIGN DRAWINGS. KEEP THE "AS-BUILT" DRAWING SET CLEAN AND IN GOOD CONDITION, AND SUBMIT TO THE COR AT THE COMPLETION OF THE PROJECT.

6. PRIOR TO START OF WORK, SUBMIT A COMPREHENSIVE CONSTRUCTION PHASING PLAN WITH SEQUENCE OF WORK TO MINIMIZE SHUTDOWN TO THE ARCJET IN ACCORDANCE WITH THE SPECIFICATIONS FOR APPROVAL BY THE COR. THE TEMPORARY CONNECTIONS SHOWN IN THE DRAWINGS ARE THE MINIMUM CONNECTIONS REQUIRED THAT ARE SHOWN FOR GUIDANCE ONLY. PROPOSE ALTERNATIVE ARRANGEMENT TO PROVIDE THE REQUIRED TEMPORARY CONNECTIONS CONSISTENT WITH THE CONSTRUCTION PHASING PLAN FOR APPROVAL.

7. PREPARE AND SUBMIT A CONSTRUCTION SCHEDULE FOR THE WORK GIVING APPROXIMATE ON-SITE DELIVERY DATES FOR CONSTRUCTION MATERIALS. NOTIFY THE COR OF ANY POSSIBLE CONSTRUCTION DELAYS AFFECTING COMPLETION AND OCCUPANCY THAT MAY ARISE DUE TO THE AVAILABILITY OF SPECIFIED PRODUCTS.

8. WHEN USED IN THESE DRAWINGS AND THE ACCOMPANYING SPECIFICATIONS THE FOLLOWING DEFINITIONS APPLY:
FURNISH: CONTRACTOR TO SUPPLY AND DELIVER COMPLETE.
INSTALL: CONTRACTOR TO PLACE, SECURE, CONNECT AND TEST AS REQUIRED TO MAKE FULLY OPERATIONAL.
PROVIDE: CONTRACTOR TO FURNISH AND INSTALL AS DEFINED ABOVE.

9. PERFORM NO PORTION OF THE WORK AT ANY TIME WITHOUT CONTRACT DOCUMENTS OR, WHERE REQUIRED BY APPROVED SHOP DRAWINGS, PRODUCT DATA, OR SAMPLES FOR EACH PORTION OF THE WORK.

10. DETAILS NOT SHOWN ARE SIMILAR IN CHARACTER TO THOSE DETAILED. WHERE SPECIFIC DIMENSIONS, DETAILS OR DESIGN INTENT CANNOT BE DETERMINED CONSULT THE COR BEFORE PROCEEDING. TYPICAL DETAILS APPLY AT ALL SIMILAR CONDITIONS WHETHER OR NOT CROSS REFERENCED.

11. THE CONTRACTOR SHALL BE RESPONSIBLE FOR CHECKING CONTRACT DOCUMENTS, FIELD CONDITIONS AND DIMENSIONS FOR ACCURACY. IF THERE ARE ANY QUESTIONS, REGARDING THESE OR OTHER COORDINATION QUESTIONS, SUBMIT THEM IN WRITING TO THE COR.

12. THE CONTRACTOR IS RESPONSIBLE FOR COORDINATING ALL ARCHITECTURAL, STRUCTURAL, ELECTRICAL (INCLUDING LIGHTING), AND MECHANICAL (INCLUDING PLUMBING), WORK SO AS TO ENSURE THAT REQUIRED CLEARANCES FOR INSTALLATION AND MAINTENANCE OF ALL EQUIPMENT ARE PROVIDED. WHERE CONFLICT OCCURS, VERIFY WITH COTR BEFORE PROCEEDING.

13. WHERE THE TERM "OR APPROVED EQUAL" IS USED, THE COR ALONE SHALL DETERMINE EQUALITY BASED UPON INFORMATION SUBMITTED BY THE CONTRACTOR. SUBSTITUTIONS SHALL NOT BE MADE PRIOR TO INSTALLATION UNLESS CUT SHEETS SUBMITTED TO THE COR ARE APPROVED.

14. COORDINATE THE WORK WITH THE COR SO AS TO MINIMIZE OR ELIMINATE INTERFERENCE WITH ONGOING USER OPERATIONS.

15. SCHEDULE AND PERFORM THE WORK DURING NORMAL WORKING HOURS UNLESS OTHERWISE APPROVED BY THE COR. WORK ON THIS PROJECT WILL REQUIRE PHASING TO MINIMIZE DISRUPTION TO THE OCCUPANTS. PERFORM ANY WORK THAT WILL CREATE EXCESSIVE NOISE OR DISRUPTION, SUCH AS CORE DRILLING, DURING OFF HOURS.

16. DO NOT PROCEED WITH ANY WORK REQUIRING ADDITIONAL COMPENSATION BEYOND THE CONTRACT AMOUNT WITHOUT WRITTEN AUTHORIZATION. FAILURE TO OBTAIN AUTHORIZATION FROM THE COR WILL INVALIDATE ANY CLAIM FOR EXTRA COMPENSATION.

17. NO WORK DEFECTIVE IN CONSTRUCTION, QUALITY, OR DEFICIENT IN ANY REQUIRMENTS OF THE CONTRACT DOCUMENTS SHALL BE ACCEPTABLE DESPITE COR FAILURE TO DISCOVER OR POINT OUT DEFECTS OR DEFICIENCES DURING CONSTRUCTION. DEFECTIVE WORK REVEALED WITHIN THE TIME REQUIRED BY GUARANTEES SHALL BE REPLACED BY WORK CONFORMING WITH THE INTENT OF THE CONTRACT. NO PARTIAL OR FINAL PAYMENT SHALL BE CONSTRUED AS AN ACCEPTANCE OF DEFECTIVE WORK OR IMPROPER MATERIALS.

18. DIMENSIONS ARE NOT ADJUSTABLE UNLESS NOTED (+/-,+,or-), WITHOUT THE COR'S WRITTEN APPROVAL.

19. DO NOT SCALE DRAWINGS. DIMENSIONS SHALL GOVERN. DETAILS SHALL GOVERN OVER PLANS AND ELEVATIONS. LARGE SCALE DETAILS SHALL GOVERN OVER SMALL SCALE DETAILS. LARGE SCALE PLANS SHALL GOVERN OVER SMALL SCALE PLANS. IF UNABLE TO LOCATE DIMENSIONS FOR ANY ITEM OF WORK, CONSULT THE COR PRIOR TO CONSTRUCTION.

20. RESTORE UTILITIES, ELECTRIC, TELEPHONE, GAS, WATER, SIGNAL AND COMMUNICATIONS SYSTEM DAMAGED AS A RESULT OF THIS WORK, TO WORKING CONDITION AT THE CONTRACTOR'S EXPENSE TO THE SATISFACTION OF THE COR.

21. IDENTIFY ANY PRE-EXISTING DAMAGE ON THE SITE, AND NOTIFY THE COR OF SUCH DAMAGE PRIOR TO STARTING WORK.

22. REMOVE, STORE AND REINSTALL ALL ELECTRICAL WORK INDICATED TO BE RELOCATED. ALL OTHER ELECTRICAL WORK SHALL REMAIN INTACT, U.O.N. AVOID DAMAGE TO ALL (E) POWER, COMMUNICATIONS OUTLETS & LIGHT FIXTURES, ETC.

23. GENERAL: ALL BUILDING ELEMENTS, MATERIALS AND EQUIPMENT SHALL BE NEW, UNLESS CALLED OUT AS EXISTING (E). PROVIDE ALL LABOR AND MATERIAL FOR A COMPLETE OPERATING INSTALLATION. OBTAIN ALL PERMITS REQUIRED BY LOCAL AGENCIES FOR DEMOLITION, CLOSURE AND NEW WORK.

24. PREPARATION: BEFORE PERFORMING MECHANICAL WORK, BECOME FULLY ACQUAINTED WITH JOB CONDITIONS AND REQUIREMENTS OF THE CONTRACT DOCUMENTS. NOTIFY COTR IN WRITING OF ALL DISCREPANCIES AND OMISSIONS IN THE CONTRACT DOCUMENTS, OR CONFLICTS WITH EXISTING CONDITIONS. OBTAIN RESOLUTION AND APPROVAL OF COR BEFORE PROCEEDING WITH ANY ELEMENT OF THIS PROJECT.

25. UTILITY SHUTDOWN: DO NOT OPERATE ANY UTILITIES WITHOUT PRIOR PERMISSION FROM COR. THIS INCLUDES, BUT IS NOT LIMITED TO, OPENING & CLOSING VALVES & SWITCHES, ETC. SUBMIT SCHEDULE OF REQUIRED SHUTDOWNS. SEND WRITTEN REQUEST FOR UNSCHEDULED SHUTDOWN TO COR AT LEAST 10 DAYS PRIOR TO SHUTDOWN. GOVERNMENT WILL SHUTDOWN SYSTEM AND MAKE THE REQUIRED CENTER NOTIFICATIONS.

26. RESTORATION: PROTECT (E) FINISHES FROM ACCIDENTAL DAMAGE. REPLACE DAMAGED CEILING TILES AND T-BARS. REPLACE OR REPAIR DAMAGED FINISHES. PERFORM PATCHING, FRAMING AND PAINTING BY WORKERS QUALIFIED IN THOSE TRADES. REPAIR OR REPLACE WITH NON-HAZARDOUS MATERIALS. MATCH (E) OR ADJACENT FINISH AND COLOR.

27. DEMOLITION: REMOVE FROM GOVERNMENT PROPERTY AND DISPOSE LEGALLY, UON. REMOVE EQUIPMENT AND PIPES, INCLUDING SUPPORTS, THAT ARE NOT TO BE REUSED. CAP (E) PIPES AND DUCTS TO REMAIN. CONDUCT DEMOLITION TO MINIMIZE DAMAGE TO (E) MATERIALS AND FINISHES TO REMAIN. RECORD 13 DIGIT NASA EQUIPMENT NUMBER ON ALL (E) EQUIPMENT TO BE REMOVED FROM SERVICE, AND SUBMIT NUMBERS TO COR. DISPOSE OF MERCURY THERMOMETERS AS HAZARDOUS MATERIAL PER APR 8715.1. DO NOT ABANDON (E) WORK IN PLACE, UON.

28. APPROVED MANUFACTURERS: MANUFACTURERS NAMED IN CONSTRUCTION DOCUMENTS REFER TO ALL MANUFACTURERS OF SIMILAR PRODUCTS. PROPOSED PRODUCT MUST BE EQUIVALENT IN MATERIAL, DIMENSIONS, RATINGS, FUNCTION AND APPLICATION AS NAMED PRODUCT. SUBMIT PRODUCT DATA.

NOTE:
COR - GOVERNMENT CONTRACTING OFFICER'S REPRESENTATIVE (COR).

HEALTH, SAFETY AND ENVIRONMENTAL NOTES

1. PERFORM ALL WORK IN STRICT ACCORDANCE WITH THE REQUIREMENTS OF CAL-OSHA, FED-OSHA, CAL-EPA, FED-EPA, SANTA CLARA COUNTY, BAAQMD (BAY AREA AIR QUALITY MANAGMENT DISTRICT), RWQCB (REGIONAL WATER QUALITY CONTROL BOARD) AND SWPPP (STORM WATER POLLUTION PREVENTION PLAN). COMPLY WITH THE PROVISIONS OF THE AMES HEALTH AND SAFETY MANUAL (APR 1700.1) AND THE AMES ENVIRONMENTAL MANAGEMENT HANDBOOK (APR 8553.1). BOTH DOCUMENTS ARE AVAILABLE ON-LINE AT:
http://server-mpo.arc.nasa.gov/Services/Proc/ProcDocs/APR1700.1-R/APR1700.1TOC.html
http://server-mpo.arc.nasa.gov/Services/CDMSDocs/Centers/ARC/Dirs/APR/APR8553.1.html

2. FOR PROTECTION OF NASA STAFF AND THE PUBLIC VISITING ADJACENT FACILITIES, ERECT REQUIRED PROTECTIVE BARRICADES, SHIELDS AND WALLS TO PROVIDE SAFE ACCESS TO THESE FACILITIES. CONTRACTOR SHALL BE RESONSIBLE FOR PROVIDING SECURITY AND CONTROLLED ACCESS INTO THE WORK SITE.

3. CONCRETE AND PAINT ARE DESIGNATED ITEMS IN THE COMPREHENSIVE PROCUREMENT GUIDELINE (CPG). THESE PRODUCTS MUST BE PURCHASED WITH THE HIGHEST RECOVERED (RECYCLED) CONTENT LEVEL PRACTICABLE. IF THEY CANNOT BE PURCHASED WITH THE REQUIRED RECOVERED MATERIAL CONTENT, THEN A WAIVER FORM MUST BE FILED THROUGH CODE QE. INFORMATION ABOUT THE CPG PRODUCTS CAN BE FOUND AT: http://www.epa.gov/cpg. THE WAIVER FORM CAN BE FOUND AT: http://q.arc.nasa.gov/qe/p2/.

4. STRIVE TO CONSERVE ENERGY. USE ENERGY EFFICIENT PRODUCTS, SPECIFICALLY PRODUCTS ENDORSED BY EPA'S ENERGY STAR PROGRAM AT: http://www.energystar.gov/products.

5. ADHERE TO THE NASA AMES ASBESTOS AND LEAD MANAGEMENT PLANS AND FEDERAL, STATE AND LOCAL REQUIREMENTS FOR REMOVAL AND DISPOSAL OF MATERIALS CONTAINING ASBESTOS AND/OR LEAD. ALL ITEMS BEING DEMOLISHED ARE ASSUMED TO CONTAIN ASBESTOS/LEAD UNLESS SAMPLING INDICATES OTHERWISE. SEE SPECIFICATION SECTIONS AND AMES HEALTH & SAFETY MANUAL - APR 1700.1, CHAPTERS 30 AND 35. HAZARDOUS MATERIALS INCLUDE BUT ARE NOT NECESSARILY LIMITED TO THE FOLLOWING:
- ASSUME DETECTABLE AMOUNTS OF LEAD IN ALL PAINTED SURFACES.
- ASSUME THAT SOME OF THE CONDUITS BEING REMOVED CONTAIN LEAD CABLING.
- ASSUME ALL GYPSUM WALLBOARD ASSEMBLIES CONTAIN ASBESTOS.
- ASSUME EXISTING CABLE AND PIPE INSULATION CONTAINS ASBESTOS.
- ASSUME THAT EXISTING PLASTER AT WALLS/CEILING CONTAIN ASBESTOS.
- ASSUME THAT CERAMIC TILES LOCATED IN THE N231 MEN'S RESTROOM CONTAIN ASBESTOS.
- ASSUME THE TEST APPARATUS LOCATED IN THE HIGH BY OF N231 CONTAINS ASBESTOS.
- ASSUME THAT SPHERE 6 AND ASSOCIATED TANKS AND PIPING CONTAIN ASBESTOS.
- ASSUME THAT THE FLOOR TILES IN THE CONTROL ROOM OF N234A CONTAIN ASBESTOS.
- ASSUME SPHERE 6, ASSOCIATED TANKS AND PIPING CONTAIN ASBESTOS, CADMIUM AND HEXAVALENT CHROMIUM.
- ASSUME THAT INCIDENTIAL ASBESTOS MAY BE ENCOUNTERED IN OTHER BUILDING MATERIALS SUCH AS MASTICS AND GASKETING.
- OSHA REQUIRES THAT FUMES FROM ALL INDOOR WELDING OR CUTTING BE EXHAUSTED TO THE OUTSIDE WITH LOCALIZED EXHAUST VENTILATION AND LEAD PAINT MUST BE REMOVED AT LEAST SIX INCHES AROUND WELD. HOT WORK PERMIT MUST BE INITIATED PRIOR TO WELD.

6. SUBMIT PROJECT SAFETY PLAN FOR APPROVAL THAT ADDRESSES PROCEDURES FOR PROTECTING PERSONNEL. SUBMIT PROJECT WORK PLAN FOR APPROVAL THAT ADDRESSES PROCEDURES FOR DEMOLISHING, HANDLING, STORING, AND DISPOSING OF HAZARDOUS MATERIAL.

7. NASA IS THE GENERATOR FOR ALL HAZARDOUS WASTE TO BE DISPOSED OF ON THIS PROJECT. WHERE FEASIBLE, MINIMIZE HAZARDOUS WASTE DEBRIS THROUGH RECLAMATION OR RECYCLING TECHNIQUES.

8. FOR ALL PAINTS USED IN THE PROJECT, THE VOC'S (VOLATILE ORGANIC COMPOUNDS) SHALL MEET THE BAY AREA QUALITY MANAGEMENT DISTRICT (BAAQMD) AIR LIMITS FOR ARCHITECTURAL COATINGS (BAAQMD REGULATION 8-3-301, TABLE 2). MSDS SHEETS WILL BE SENT TO THE COTR FOR PRE-APPROVAL. UPON COMPLETION OF THE PROJECT, THE MSDS SHEETS OF THE PAINTS SHALL BE SENT TO THE COTR FOR COMPLIANCE DOCUMENTATION. THE COTR WILL FORWARD THE MSDS SHEETS TO THE AMES ENVIRONMENTAL MANAGEMENT DIVISION (CODE JQ).

9. IF ANY EXISTING TANK, VESSEL OR PIPING CONTAINING A HAZARDOUS MATERIAL OR WASTE IS INSTALLED OR DEMOLISHED, MOVED OR REMOVED FROM ITS PRESENT LOCATION OR OTHERWISE MODIFIED, NASA IS REQUIRED TO SUBMIT TO THE COUNTY OF SANTA CLARA, DEPARTMENT OF ENVIRONMENTAL HEALTH, HAZARDOUS MATERIALS COMPLIANCE DIVISION, TWO SETS OF COMPLETE PLANS AND A CLOSURE PLAN OR AN INSTALLATION PLAN. COORDINATE PERMITTING WITH THE AMES ENVIRONMENTAL MANAGEMENT DIVISION (CODE JQ).

10. IF ANY TANK THAT CONTAINED A HAZARDOUS MATERIAL OR HAZARDOUS WASTE IS CLOSED, NASA IS REQUIRED TO SUBMIT TO THE COUNTY TWO SETS OF COMPLETE PLANS AND ABOVE GROUND TANK CLOSURE PERMIT APPLICATION/CLOSURE PLAN.

11. IF ANY TANK THAT ONCE CONTAINED A HAZARDOUS MATERIAL OR HAZARDOUS WASTE IS TO BE CLEANED AND RECYCLED, NASA IS REQUIRED TO SUBMIT A HAZARDOUS MATERIALS STORAGE TANK SYSTEM CLEANING/CUTTING APPLICATION TO THE COUNTY PRIOR TO CLEANING/CUTTING AND A TANK CLOSURE CERTIFICATION FORM ONCE THE TANK IS CLEANED.

12. IF ANY PIPING THAT CONTAINED A HAZARDOUS MATERIAL IS DISPOSED OF IN A LANDFILL, RECYCLED, SCRAPPED OR ANY OTHER PROCEDURE FOR GETTING RID OF THE PIPING, THEN SUBMIT CLEANING PROCEDURES FOR THE PIPING.

13. ALL TANKS AND PIPING CONTAINING HAZARDOUS MATERIALS OR HAZARDOUS WASTE REQUIRE SECONDARY CONTAINMENT. THE CONTRACTOR MUST ADHERE TO FEDERAL, STATE AND LOCAL REQUIREMENTS FOR THE REMOVAL AND DISPOSAL OF HAZARDOUS MATERIALS.

DESIGN BUILD

CONTRACTOR IS TO PROVIDE A COMPLETE PROJECT DESIGN FOR ALL PORTIONS OF THE PROJECT DESIGN DESIGNATED AS DESIGN-BUILD AND THOSE WITH COMPONENTS PROVIDED AS 'APPROVED EQUAL.' THE CONTRACTOR IS RESPONSIBLE FOR DELIVERING TO THE GOVERNMENT A QUALITY END-PRODUCT MEETING OR EXCEEDING THE PROJECT REQUIREMENTS AND INCORPORATING ALL ESSENTIAL AND MANDATORY REQUIREMENTS INTO THE FINAL CONSTRUCTED FACILITY. THE DESIGN OF THE DESIGN-BUILD COMPONENTS SHALL BE SUBMITTED TO THE GOVERNMENT FOR REVIEW AND APPROVAL IN ACCORDANCE WITH THE CONTRACT DOCUMENTS PROVIDED TO THE CONTRACTOR AS PART OF THE REQUEST FOR PROPOSAL AND SHALL CONSIST OF 60%, 90% AND 100% MILESTONE SUBMITTALS THAT INCLUDE ALL CONSTRUCTION MATERIAL AND SYSTEM SELECTIONS FOR ARCHITECTURAL, CIVIL, STRUCTURAL, MECHANICAL, ELECTRICAL, CONTROLS AND THEIR COMPLETE ARRANGEMENT. EACH MILESTONE SUBMITTAL WILL REQUIRE ONE ELECTRONIC COPY OF DRAWINGS, BIM, SPECIFICATIONS, DESIGN CRITERIA AND CALCULATIONS PER THE GOVERNMENT REQUIREMENTS OF EACH DEFINED SUBMITTAL.

ALL ASPECTS OF THE DESIGN EFFORT – ARCHITECTURAL, CIVIL, STRUCTURAL, MECHANICAL, ELECTRICAL, AND CONTROLS SHALL REQUIRE A QUALIFIED AND EXPERIENCED LICENSED ARCHITECT OR LICENSED ENGINEER WHO SHALL REMAIN IN SUCH CAPACITY UNTIL THE DESIGN IS COMPLETED. CONSTRUCTION SPECIFICATIONS SHALL BE DEVELOPED USING THE GOVERNMENT SPECIFICATION SYSTEM AND DESIGN DRAWINGS SHALL BE DEVELOPED ELECTRONICALLY IN ACCORDANCE WITH GOVERNMENT DRAWING/DOCUMENTATION STANDARDS AND THE 'FACILITY INFORMATION MODELING SCOPE OF SERVICES AND REQUIREMENTS FOR CONSTRUCTION CONTRACTOR IN A DESIGN-BID-BUILD PROCESS' BIM GUIDELINE. CALCULATIONS SHALL BE SUBMITTED FOR ALL CRITICAL ARCHITECTURAL, CIVIL, STRUCTURAL, ELECTRICAL, AND MECHANICAL TITLE 24 DESIGNS AND SHALL BE NEAT, CLEAR, CONCISE, AND SELF-EXPLANATORY.

THE APPROVED DESIGN SHALL BE INTENDED TO MEET ALL APPLICABLE CODES, ORDINANCES AND STANDARDS, INCLUDING APD 8829.1 ENTITLED CONSTRUCTION PERMITS AND NPD 8820.2, ENTITLED FACILITY SUSTAINABLE DESIGN. THE FINAL DESIGN FOR THOSE PORTIONS OF THE PROJECT DESIGN DESIGNATED AS DESIGN-BUILD SHALL BE SUBMITTED FOR A MINIMUM 30-DAY GOVERNMENT CONSTRUCTION PERMIT REVIEW CYCLE AND SUBSEQUENT APPROVAL PRIOR TO MATERIAL AND EQUIPMENT PROCUREMENT, FABRICATION AND INSTALLATION.

THE COMPLETE PROJECT DESIGN PROVIDED BY THE CONTRACTOR FOR THE DESIGN-BUILD COMPONENTS IS TO CONSIST OF DRAWINGS, BIM, SPECIFICATIONS, DESIGN CRITERIA, CALCULATIONS AND RELATED GOVERNMENT-APPROVED SUBMITTALS. ALL CALCULATIONS AND DETAILED DESIGN DRAWINGS ARE TO BE SIGNED AND STAMPED BY A CALIFORNIA LICENSED ARCHITECT AND PROFESSIONAL ENGINEER.

CONTRACTOR SHALL SUBMIT TO THE GOVERNMENT FOR REVIEW ALL SUBMITTAL ITEMS IDENTIFIED IN THE FINAL SPECIFICATIONS OF THE DESIGN-BUILD PORTIONS OF THE PROJECT INCLUDING THOSE ELEMENTS DESIGNATED AS OR APPROVED EQUAL' PRIOR TO THEIR FABRICATION AND INSTALLATION.

REGISTERED PROFESSIONAL ENGINEER GREGORY JAMES HITE No. C70284 CIVIL STATE OF CALIFORNIA

DEMOLITION NOTES

1. ATTEND A PRE-DEMOLITION JOBSITE MEETING CONDUCTED BY THE COTR PRIOR TO DEMOLITION TO SCHEDULE THE WORK WITH THE USER SO AS NOT TO INTERFERE WITH USER'S NORMAL BUSINESS OPERATIONS.

2. CONTRACTOR SHALL BE RESPONSIBLE FOR PROVIDING SECURITY AND CONTROLLED ACCESS INTO THE WORK SITE.

3. ERECT AND MAINTAIN TEMPORARY BRACING, BARRICADES, SIGNS, AND OTHER MEASURES AS NECESSARY TO PROTECT THE PUBLIC, WORKERS, PERSONS, AND ADJOINING PROPERTY FROM DAMAGE FROM DEMOLITION WORK IN ACCORDANCE WITH THE APPLICABLE CODES AND REGULATIONS.

4. REMOVE DEBRIS FROM THE PREMISES DAILY. KEEP OCCUPIED AREAS ADJACENT TO DEMOLITION ZONES BROOM CLEAN AND FREE OF DEBRIS AT ALL TIMES. ALL AREAS ARE TO BE BROOM CLEAN AND FREE OF DEBRIS UPON COMPLETION OF THE DEMOLITION WORK.

5. PROVIDE A SYSTEM OF TEMPORARY LIGHTS THROUGHOUT THE SPACE UNDER CONSTRUCTION, AS REQUIRED.

6. PROTECT FROM DAMAGE MATERIALS NOT REQUIRED TO BE REMOVED OR DEMOLISHED. RESTORE TO ORIGINAL CONDITION SURFACES WHICH HAVE BEEN DISTURBED BY DEMOLITION AND ARE INDICATED TO REMAIN.

7. COORDINATE EXTENT OF DEMOLITION WORK WITH NEW WORK.

8. SCHEDULE ALL WORK TO HOLD UTILITY OUTAGES TO A MINIMUM. SUBMIT REQUESTS FOR UTILITY OUTAGES AND CONNECTION IN WRITING TO THE GOVERNMENT AT LEAST 15 DAYS IN ADVANCE OF THE TIME REQUIRED, SEE SPEC. SEC. 01 11 00 PARAGRAPH 1.10.1.

9. THE GOVERNMENT RETAINS FIRST SALVAGE RIGHTS TO ALL EXISTING EQUIPMENT REMOVED UNDER THIS CONTRACT. CONSULT WITH THE COTR FOR DISPOSITION OF THE EXISTING EQUIPMENT TO BE REMOVED. INCLUDE IN BID PROPOSAL ALL COSTS RELATED TO THE DISPOSAL OF THE EXISTING EQUIPMENT REMOVED UNDER THIS CONTRACT TO AN OFFSITE LOCATION IN ACCORDANCE WITH STATE AND LOCAL LAWS PERTAINING TO HAZARDOUS WASTE.

10. PERFORM TRENCHING AND OTHER EXCAVATION WORK WITH EXTREME CARE TO PROTECT ALL EXISTING UNDERGROUND INSTALLATIONS WHICH SHALL REMAIN. EXISTING INSTALLATIONS INDICATED ON THE DRAWINGS ARE BASED ON AVAILABLE AS-BUILT DRAWINGS AND VISUAL VERIFICATIONS, UON. NOT ALL UNDERGROUND INSTALLATIONS MAY BE INDICATED ON DRAWINGS. IT IS RECOMMENDED THE CONTRACTOR INDEPENDENTLY VERIFY UNDERGROUND INSTALLATIONS IF UNSURE OF CONCEALMENT.

11. RETURN ALL AREAS AFFECTED BY DEMOLITION OR CONSTRUCTION CONTIGUOUS TO THE IMMEDIATE SITE AS DEFINED IN THE SCOPE OF WORK TO THEIR ORIGINAL CONDITION, INCLUDING, BUT NOT LIMITED TO, GRASS, ASPHALT, CONCRETE SIDEWALKS, CONCRETE CURBS, CONCRETE CURB GUTTERS, CONCRETE STRUCTURES, CONCRETE FOUNDATIONS/FOOTINGS, EARTH WITH LANDSCAPING, EARTH WITH ROCKS AND EARTH.

12. FIELD VERIFY ALL EXISTING CONDITIONS PRIOR TO DEMOLITION WORK. NOTIFY THE COTR OF ANY DISCREPANCIES PRIOR TO START OF DEMOLITION WORK.

13. MAINTAIN BUILDING POWER, TELECOMMUNICATIONS, PLUMBING, HVAC, SECURITY, FIRE ALARM, AND FIRE PROTECTION SYSTEMS OPERATIONAL AT ALL TIMES.

DESIGN CRITERIA

THE PROJECT DESIGN CRITERIA SHALL BE USED BY THE CONTRACTOR FOR THE DESIGN-BUILD PORTIONS OF THE DESIGN. THEY ARE FURNISHED IN THE BID PACKAGE. ALL OTHER DISCIPLINE SPECIFIC CRITERIA LISTED ON THE CONTRACT DRAWINGS CAN BE USED TO SUPPLEMENT IF APPLICABLE. IMMEDIATE ATTENTION SHALL BE BROUGHT TO THE COR IF CONFLICTS SHOULD ARISE.

INSPECTIONS

THE CONSTRUCTION INSPECTIONS LISTED ARE IN ADDITION TO THE INSPECTIONS REQUIRED BY CBC SECTION 110 AND OTHER DRAWINGS AND SPECIFICATIONS.
INSPECTED WORK THAT IS INSTALLED OR COVERED WITHOUT THE APPROVAL OF THE BUILDING OFFICIAL AND THE INSPECTOR, IS SUBJECT TO REMOVAL OR EXPOSURE.

1. IT IS THE RESPONSIBILITY OF THE GENERAL CONTRACTOR TO INFORM THE COTR AT LEAST 48 HOURS PRIOR TO PERFORMING ANY WORK THAT REQUIRES INSPECTION. DELINQUENT NOTIFICATION MAY REQUIRE DEMOLITION OF COVERING MATERIALS TO FACILITATE OBSERVATION.

2. PRELIMINARY INSPECTION:
   - REQUIRED SUBSEQUENT TO STAGING BUT PRIOR TO START OF CONSTRUCTION

3. SPECIAL INSPECTIONS:
   - CONCRETE MIX
   - CONCRETE FORMWORK
   - CONCRETE REINFORCEMENT
   - HIGH STRENGTH BOLTING
   - STRUCTURAL WELDING
   - EMBEDDED PIPES AND CONDUIT
   - PRESSURE SAFETY

4. CONTINUOUS INSPECTIONS:
   - GRADING AND FILLING
   - FOUNDATIONS
   - SLABS
   - STRUCTURAL FRAMING
   - PREFABRICATION, ASSEMBLY AND ERECTION

5. FINAL INSPECTION:
   - REQUIRED PRIOR TO OCCUPANCY

NOTE:
1. FOR INSPECTIONS REQUIRING A CERTIFICATE OF COMPLIANCE REFER TO CBC SEC 1704 FOR SPECIAL INSPECTIONS AND THE APPROPRIATE DISCIPLINE'S DRAWINGS AND SPECIFICATIONS FOR MORE INFORMATION.
2. FINAL INSPECTION REQUIRES A CERTIFICATE OF OCCUPANCY, REFER TO

DWG NO. A231-1300- G006 | SH. | REV.

SITE PLAN

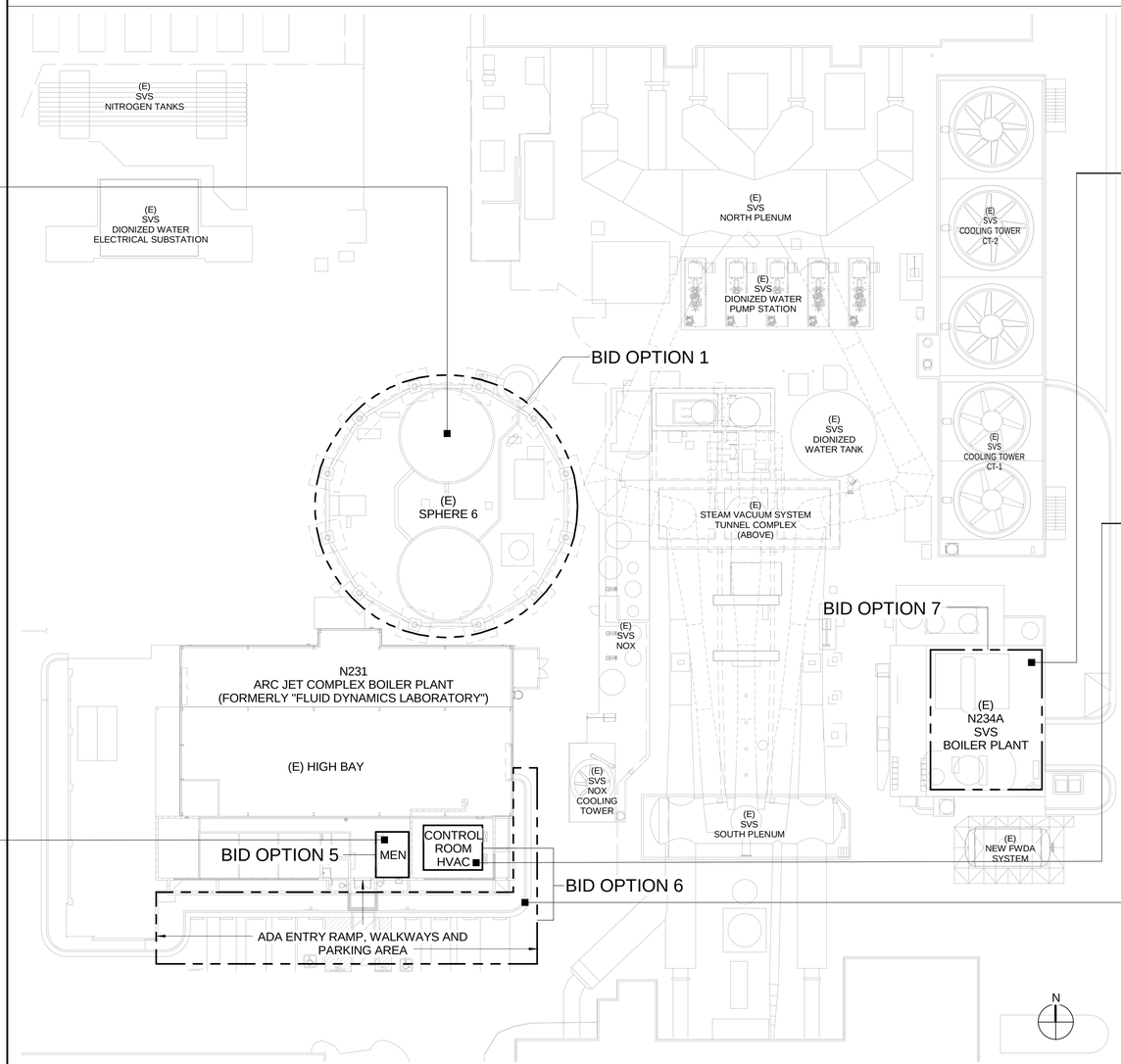

BID OPTIONS 2 & 3
(FOR NEW WORK SEE MECHANICAL)

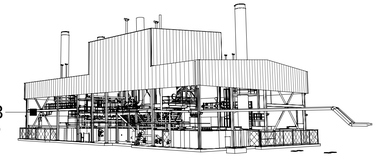

N231 ARCJET COMPLEX BOILER AREA ~ PERSPECTIVE VIEW

BID OPTIONS

BID OPTION 1 - NOX SPHERE 6
DEMOLITION OF (E) NOX SPHERE 6, ASSOCIATED ACCESSORY BUILDINGS, TANKS AND PIPING OF ABANDONED NOX SYSTEM. BID OPTION INCLUDES ALL DEMOLITION WORK ABOVE GROUND SHOWN WITHIN THIS BOUNDARY. DEMOLISH SCRUBBER SPHERE AND STRUCTURAL SUPPORTS, NOX SCRUBBER TOWER, NOX SCRUBBER SURGE HOLDING TANK, NOX SCRUBBER SURGE WASTE TANK, STORAGE SHED, CHEMICAL TANK AND ASSOCIATED PIPING.

BID OPTION 2 - BOILER AUXILIARY STEAM HEATING SYSTEM
DESIGN, FURNISH AND INSTALL AUXILIARY STEAM HEATING SYSTEM FOR ALL THREE BOILERS TO UTILIZE HEAT EXCHANGER IN MUD DRUM FOR MAINTAINING BOILER TEMPERATURE ABOVE 250°F WHILE MAIN BURNERS ARE SHUT OFF. AUXILIARY HEATING SYSTEM SHALL HEAT THE TWO BOILERS INTENDED FOR NEXT DAY SERVICE. SYSTEM SHALL BE DESIGNED FOR AUTOMATIC UNATTENDED SERVICE. COMBINING BOILER AUXILIARY HEATING SYSTEM WITH DEAERATOR AUXILIARY HEATING SYSTEM INTO ONE SYSTEM IS AN ACCEPTABLE ALTERNATIVE.

BID OPTION 3 - BOILER STACK ACCESS
PROVIDE SVS BOILER STACK PLATFORMS AND CAGED LADDERS.

BID OPTION 4 - NOT USED

BID OPTION 5 - N231 N231 ARC JET COMPLEX BOILER PLANT RESTROOM
REMODEL N231 ARC JET COMPLEX BOILER PLANT RESTROOM FOR ADA COMPLIANCE. PROVIDE SHOWER ROOM AND TANKLESS WATER HEATER.

BID OPTION 6 - N231 ARC JET COMPLEX BOILER PLANT PAINTING, PARKING AND CONTROL ROOM HVAC
PROVIDE N231 ARC JET COMPLEX BOILER PLANT CONTROL ROOM REPLACEMENT HVAC SYSTEM, ENTRY WALKWAY AND ADA RAMP, PARKING LOT PAVING AND CURBS, AND PAINTING OF N231 ARC JET COMPLEX BOILER PLANT EAST HIGH BAY WALL.

BID OPTION 7 - N234A BOILER & FWDA DEMOLITION
DEMOLITION OF THE (E) SVS BOILER AND FWDA SYSTEM LOCATED INSIDE N234A. DEMOLISH (E) MECHANICAL EQUIPMENT, UNLESS SPECIFICALLY IDENTIFIED TO REMAIN. EQUIPMENT DEMOLITION SCOPE INCLUDES ALL CONNECTING PIPING, PUMPS, CONTROLS, INSTRUMENTS AND ELECTRICAL POWER, WHICH ARE NOT REQUIRED FOR OTHER EQUIPMENT IDENTIFIED TO REMAIN.

REGISTERED PROFESSIONAL ENGINEER GREGORY JAMES HITE No. C70284 CIVIL STATE OF CALIFORNIA

ZONE	LETTER	DESCRIPTION	DRAWN	DATE	Approver APPRVD

REVISIONS

DRAWN P. ALDEN	DATE	Ames Research Center Moffett Field, California
DESIGNED P.ALDEN	DATE	
CHECKED G.HITE	DATE	REPLACE ARC JET COMPLEX SVS BOILER GENERAL
A&E PM G.HITE	DATE	
NASA PM W.LEE	DATE	BID OPTION PLAN
REQUESTER G.RAICHE	DATE	
R&QA	DATE	
SAFETY/PSM	DATE	SIZE D · CAGE CODE 25307 · A 231-1300- G006 · REV
SUPERVISOR S. FRANKEL	DATE	SCALE: 3/64" = 1'-0" · INDEX · SHEET · OF

FILE NAME: 60212932_SVS-Boiler Plant_Genl-CENTRAL.rvt 12/12/12

AECOM: 60212932.0001

C:\Users\rschart1\Documents\Revit\2011\60212932_SVS-Boiler Plant_Genl-CENTRAL_palden.rvt
1/29/2013 10:34:34 AM

DWG NO. A231-1300- G007 | SH. | REV.

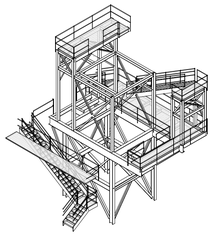

DEAERATOR STRUCTURE

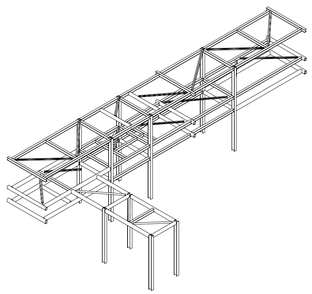

WALKWAY AND PIPE SUPPORT STRUCTURE

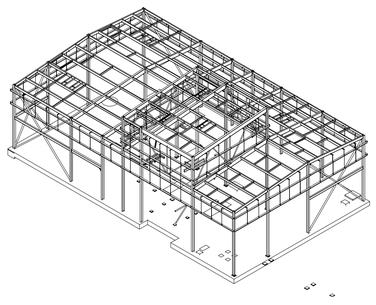

CANOPY STRUCTURE

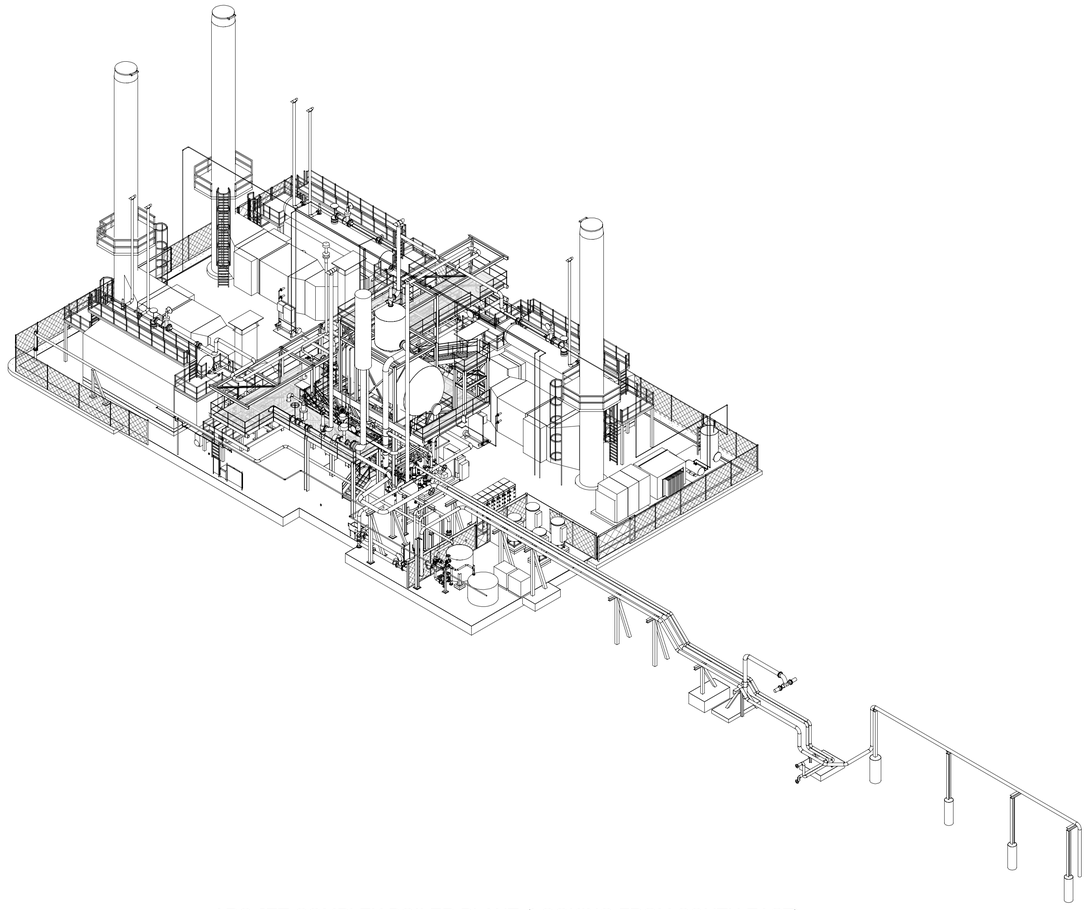

ARC JET COMPLEX BOILER PLANT (LOOKING FROM SOUTH EAST)

~ I S O M E T R I C V I E W S ~

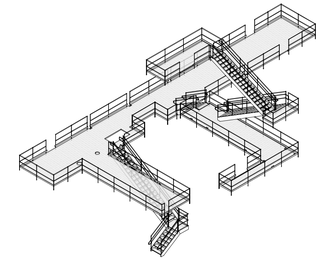

ARCHITECTURAL STAIRS, MAIN WALKWAY AND SERVICE PLATFORMS

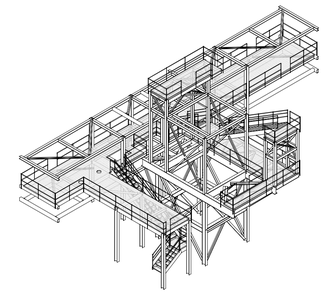

WALKWAY AND PLATFORMS COMPOSITE VIEW

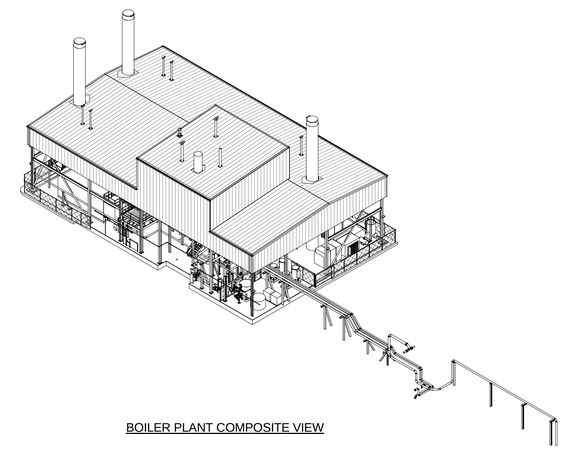

BOILER PLANT COMPOSITE VIEW

Ames Research Center

ZONE	LETTER	DESCRIPTION	DRAWN	DATE	Approver APPRVD

REVISIONS

DRAWN P. ALDEN	DATE	Ames Research Center Moffett Field, California
DESIGNED P.ALDEN	DATE	
CHECKED G.HITE	DATE	
A&E PM G.HITE	DATE	REPLACE ARC JET COMPLEX SVS BOILER GENERAL
NASA PM W.LEE	DATE	BOILER PLANT ILLUSTRATIONS
REQUESTER G.RAICHE	DATE	
R&QA	DATE	
SAFETY/PSM	DATE	SIZE D / CAGE CODE 25307 / A 231-1300- G007 / REV
SUPERVISOR S. FRANKEL	DATE	SCALE: NOT TO SCALE / INDEX / SHEET / OF

REGISTERED PROFESSIONAL ENGINEER GREGORY JAMES HITE No. C70284 CIVIL STATE OF CALIFORNIA

FILE NAME: 60212932_SVS-Boiler Plant_Genl-CENTRAL.rvt 12/12/12

AECOM: 60212932.0001

C:\Users\rschaef1\Documents\Revit\2011\60212932_SVS-Boiler Plant_Genl-CENTRAL_palden.rvt
1/29/2013 10:35:16 AM

DWG NO. A231-1300- G008 | SH. | REV.

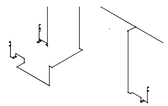

CHEMICAL FEED
(CF)

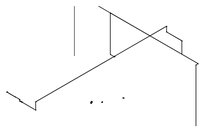

COMPRESSED AIR
(A)

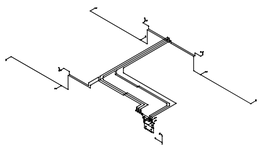

BOILER BLOWDOWN
(BD)

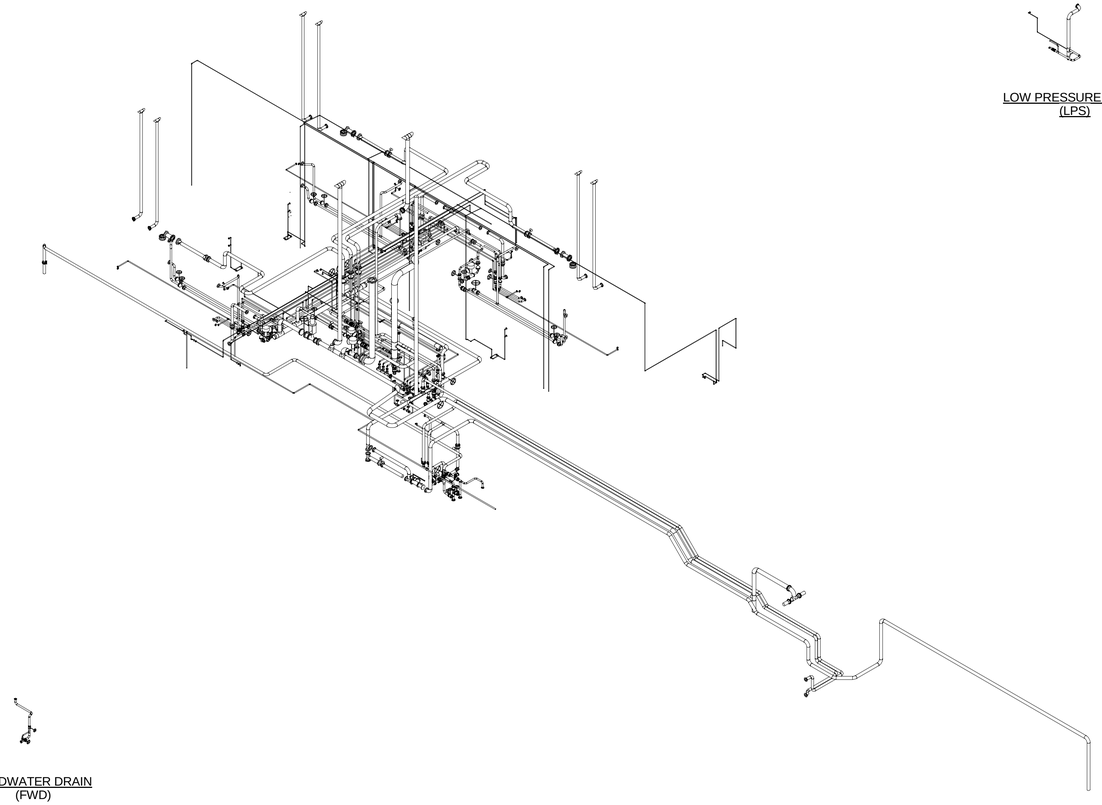

FEEDWATER DRAIN
(FWD)

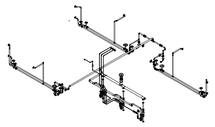

BOILER FEEDWATER
(BFW)

LOW PRESSURE STEAM
(LPS)

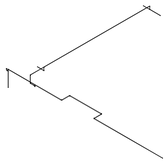

INSTRUMENT AIR
(IA)

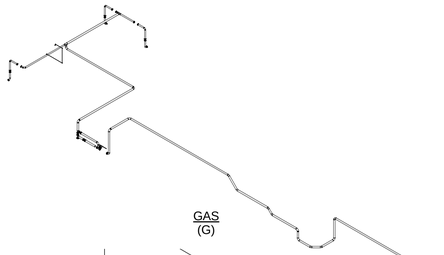

GAS
(G)

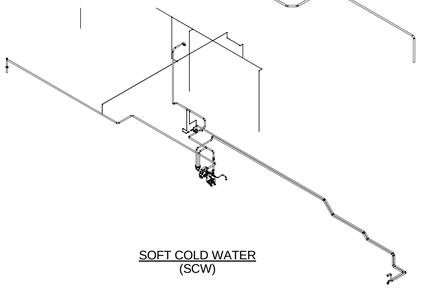

SOFT COLD WATER
(SCW)

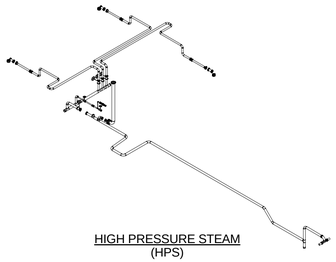

HIGH PRESSURE STEAM
(HPS)

ARC JET COMPLEX BOILER PLANT PIPING LOOKING FROM SOUTH EAST

~ ISOMETRIC VIEWS ~

Ames Research Center

ZONE	LETTER	DESCRIPTION	DRAWN	DATE	Approver APPRVD

REVISIONS

DRAWN P. ALDEN	DATE	Ames Research Center Moffett Field, California
DESIGNED P.ALDEN	DATE	
CHECKED G.HITE	DATE	REPLACE ARC JET COMPLEX SVS BOILER GENERAL
A&E PM G.HITE	DATE	
NASA PM W.LEE	DATE	BOILER PLANT PIPING ILLUSTRATIONS
REQUESTER G.RAICHE	DATE	
R&QA	DATE	SIZE D · CAGE CODE 25307 · A 231-1300- G008 · REV
SAFETY/PSM	DATE	
SUPERVISOR S. FRANKEL	DATE	SCALE: NOT TO SCALE · INDEX · SHEET · OF

REGISTERED PROFESSIONAL ENGINEER GREGORY JAMES HITE No. C70284 CIVIL STATE OF CALIFORNIA

FILE NAME: 60212932_SVS-Boiler Plant_Genl-CENTRAL.rvt 12/12/12

AECOM: 60212932.0001

C:\Users\rschaefl1\Documents\Revit\2011\60212932_SVS-Boiler Plant_Genl-CENTRAL_palden.rvt
1/29/2013 10:35:33 AM

DWG NO.	SH.	REV
A231-1300-V001		

LEGEND

AIR	AIR LINE
	BUILDINGS (E)
X	CHAINLINK FENCE
E	ELECTRIC LINE
HPA	HIGH PRESSURE AIR LINE
HV	HIGH VOLTAGE ELECTRIC LINE
	GRADE BREAK
NG	NATURAL GAS LINE
P	PROPANE GAS LINE
RW	RECLAIMED WATER LINE
RO	REVERSE OSMOSIS WATER LINE
	ROAD CENTERLINE
SS	SEWER LINE
SD	STORM DRAIN LINE
T	TELEPHONE LINE
VAC	VACUUM LINE
W	WATER LINE

SURVEY NOTES

1. HORIZONTAL CONTROL: COORDINATE VALUES SHOW HEREIN ARE BASED ON THE 1983 NORTH AMERICAN DATUM.
2. VERTICAL CONTROL: ELEVATIONS SHOWN HERE ARE BASED UPON THE 1988 NORTH AMERICAN VERTICAL DATUM.
3. SITE BENCHMARK: REFERENCE SHEET V101.
4. THIS SURVEY IS VALID ONLY IF THE DRAWING INCLUDES THE SEAL AND SIGNATURE OF THE SURVEYOR.

PROFESSIONAL LAND SURVEYOR
NEIL E. THONESEN
No.8656
STATE OF CALIFORNIA

SYMBOLS AND ABBREVIATIONS

ACCESSIBLE PARKING SYMBOL
AIR VAULT
BACKFLOW PREVENTER
BENCHMARK
BOLLARD
BRASS CAP
CHISELED X
CURB INLET
REDUCED PRESSURE DOUBLE CHECK VALVE
ELECTRIC BOX
ELECTRIC MANHOLE
ELECTRIC STRUCTURE
ELECTRIC VAULT
FIRE DEPARTMENT CONNECTION
FIRE HYDRANT
FLOW METER
FLOW CONTROL VALVE
GAS DOWN VALVE
GAS STRUCTURE
GAS VALVE
GAS VAULT
GRATE INLET
MAG NAIL
NAIL FOUND
NAIL SET
PRESSURE GAGE
ROOF DRAIN
SEWER BOX
SEWER CLEAN OUT
SEWER MANHOLE
SEWER VALVE
SIGN
SIGN (2 POST)
SLOPE
STORM DRAIN MANHOLE
STRAINER
TELEPHONE MANHOLE
THREE WAY VALVE W/ MOTOR
UNKNOWN BOX
UNKNOWN MANHOLE
UNKNOWN STRUCTURE
UNKNOWN VAULT
UTILITY CAP
WATER METER
WATER STRUCTURE
WATER VALVE
WATER VAULT
WHEEL STOP

AC	ASPHALT CONCRETE
AIR	AIR LINE
AIRV	AIR VALVE
ARC	AMES RESEARCH CENTER
BC	BUILDING CORNER
BLD	BUILDING LINE
CL	CENTERLINE
CNC	CONCRETE
CONT.	CONTAINER
COR	CONTRACTING OFFICER'S REPRESENTATIVE
E	ELECTRIC LINE
(E)	EXISTING
EC	EDGE OF CONCRETE
EG	EXISTING GRADE
EL	ELEVATION
EP	EDGE OF PAVEMENT
EWS	EYE WASH STATION
FCL	FENCE LINE
FF	FINISHED FLOOR
FG	FINISHED GRADE
FL	FLOW LINE
FNC	CHAIN LINK FENCE
GA	GALVANIZED
GB	GRADE BREAK
GUT	GUTTER
HV	HIGH VOLTAGE LINE
INV	INVERT ELEVATION
LIP	LIP OF CURB
NG	NATURAL GAS LINE
P	PAVEMENT
RISR	RISER
SCW	SOFT COLD WATER
SPW	SOFT PREHEATED WATER
SS	SANITARY SEWER
ST	STRIPING
SVS	STEAM VACUUM SYSTEM
SW	SIDEWALK
T	TELEPHONE LINE
TBC	TOP BACK OF CURB
TC	TOP OF CURB
TS	TOP OF SLAB
UN	UNKNOWN LINE
UG	UNDERGROUND
W	WATER LINE
WBL	WALL BLOCK

LANDSCAPING
EXISTING CONCRETE SLAB
MAT SLAB
NEW ASPHALT
NEW CONCRETE
TRUNCATED DOMES

ZONE	LETTER	DESCRIPTION	DRAWN	DATE	APPRVD

REVISIONS

DRAWN A.FERNANDEZ	DATE
DESIGNED E.FRAMPTON	DATE
CHECKED R.CROENI	DATE
A&E PM G.HITE	DATE
NASA PM W.LEE	DATE
REQUESTER G.RAICHE	DATE
R&QA	DATE
SAFETY	DATE
SUPERVISOR S.FRANKEL	DATE

Ames Research Center
Moffett Field, California

REPLACE ARC JET COMPLEX SVS BOILER
SURVEY

SURVEY CONTROL NOTES, LEGEND, SYMBOLS & ABBREVIATIONS

SIZE	CAGE CODE		REV
D	25307	A 231-1300-V001	
SCALE	NO SCALE	INDEX	SHEET OF

FILE NAME: 231-V001.DWG 1/28/2013

DWG: W:\2011 Projects\351100\Dwg\Civil\231-V001.dwg Version: 18.1s (LMS Tech) User: KatleaA
DATE: Jan 25, 2013 - 8:01:58 am

DWG NO.	SH.	REV
A231-1300-V101		

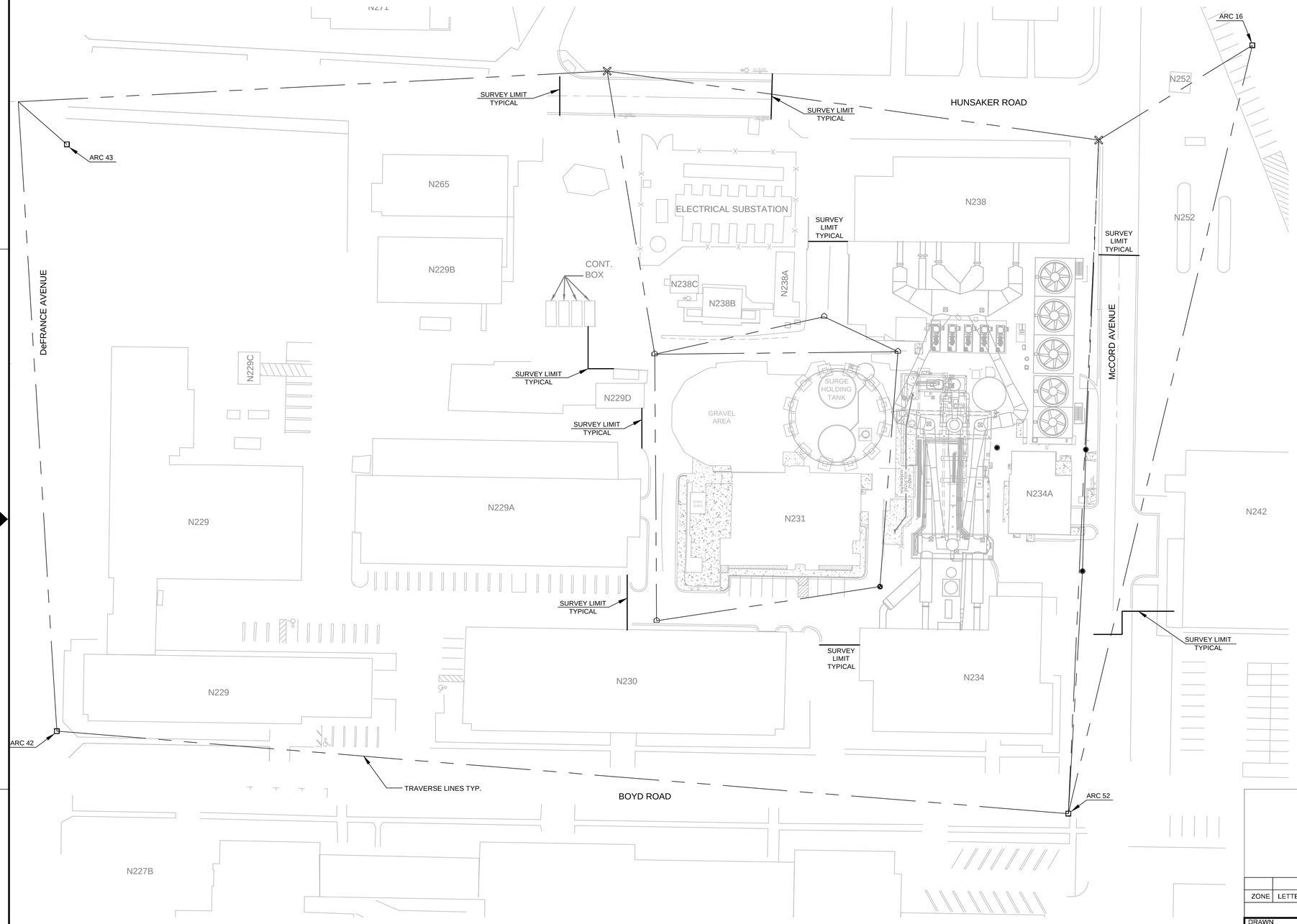

1 SURVEY CONTROL
V101 | V101
SCALE: 1" = 40"

N

1"=40' 40 0 40 40

SHEET NOTES

1. REFER TO V001 FOR LEGEND AND ABBREVIATIONS.
2. THE LOCATION OF THE SVS NOx EMISSION REDUCTION SYSTEM PADS WERE NOT SURVEYED. REFERENCE SVS NOx EMISSION REDUCTION SYSTEM PLANS FOR ACTUAL LOCATION.

BENCHMARKS

BENCHMARK	PROJECT ELEVATION	PROJECT NORTHING	PROJECT EASTING	ARC ELEVATION
*ARC 16	10.29'	1,978,866.23'	6,109,054.55'	10.25'
ARC 42	15.42'	1,978,332.79'	6,108,125.80'	15.42'
ARC 43	13.17'	1,978,789.26'	6,108,133.55'	13.19'
ARC 52	14.79'	1,978,268.69'	6,108,911.62'	-

* DAMAGED BENCHMARK

ZONE	LETTER	DESCRIPTION	DRAWN	DATE	APPRVD

REVISIONS

DRAWN A.FERNANDEZ	DATE	
DESIGNED E.FRAMPTON	DATE	
CHECKED R.CROENI	DATE	
A&E PM G.HITE	DATE	
NASA PM W.LEE	DATE	
REQUESTER G.RAICHE	DATE	
R&QA	DATE	
SAFETY	DATE	
SUPERVISOR S.FRANKEL	DATE	

PROFESSIONAL LAND SURVEYOR NEIL E. THONESEN No. 8656 STATE OF CALIFORNIA

Ames Research Center
Moffett Field, California

REPLACE ARC JET COMPLEX SVS BOILER
SURVEY
SURVEY CONTROL

SIZE	CAGE CODE	REV
D	25307	231-1300-V101
SCALE 1"=40'	INDEX	SHEET OF

FILE NAME: 231-V101.DWG 1/28/2013

DWG: \\V:\2011 Projects\051100\Dwg\Civil\231-V101.dwg Version: 18.1s (LMS Tech) User: KatisoA
DATE: Jan 25, 2013 - 8:02:09 am

DWG NO.	SH.	REV
A231-1300-V201		

SHEET NOTES

1. REFER TO V001 FOR SYMBOLS AND ABBREVIATIONS.
2. THE LOCATION OF THE SVS NOx EMISSION REDUCTION SYSTEM PADS WERE NOT SURVEYED. REFERENCE SVS NOx EMISSION REDUCTION SYSTEM PLANS FOR ACTUAL LOCATION.

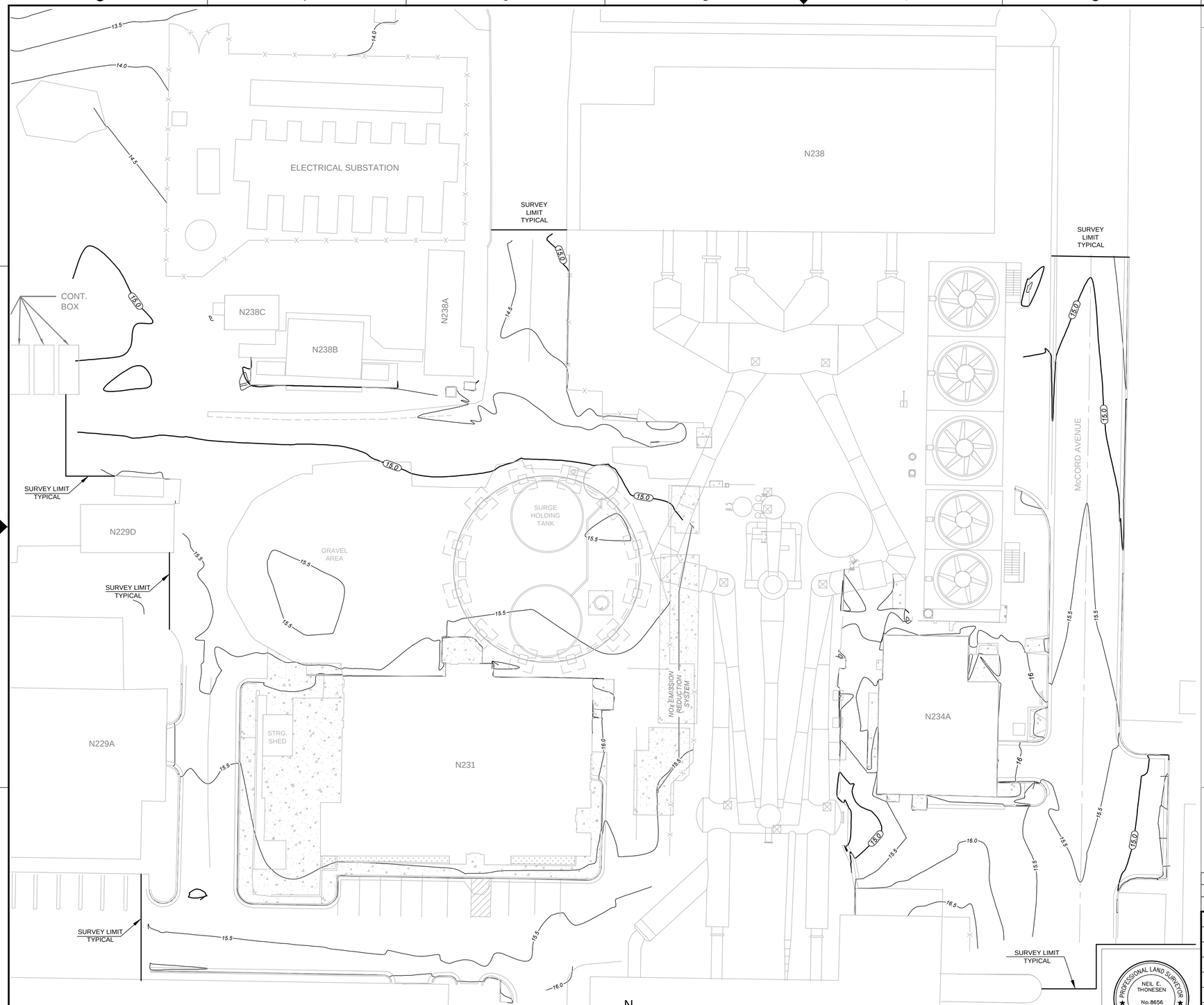

1 EXISTING TOPOGRAPHY
V201 V201 SCALE: 1" = 20'

1" = 20' 20 0 20 40

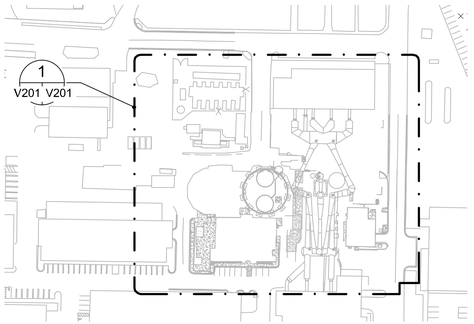

KEY PLAN
N.T.S.

PROFESSIONAL LAND SURVEYOR
NEIL E. THONESEN
No. 8656
STATE OF CALIFORNIA

ZONE	LETTER	DESCRIPTION	DRAWN	DATE	APPRVD

REVISIONS

DRAWN A.FERNANDEZ	DATE
DESIGNED E.FRAMPTON	DATE
CHECKED R.GROENI	DATE
A&E PM G.HITE	DATE
NASA PM W.LEE	DATE
REQUESTER G.RAICHE	DATE
R&QA	DATE
SAFETY	DATE
SUPERVISOR S.FRANKEL	DATE

Ames Research Center
Moffett Field, California

REPLACE ARC JET COMPLEX SVS BOILER
SURVEY
EXISTING TOPOGRAPHY

SIZE	CAGE CODE	REV
D	25307	A 231-1300-V201
SCALE 1"=20'	INDEX	SHEET OF

FILE NAME: 231-V201.DWG 1/28/2013

DWG: \\N:\2011 Projects\351100\Dwg\Civil\231-V201.dwg Version: 18.1s (LMS Tech) User: KatieA
DATE: Jan 25, 2013 - 8:02:28 am

DWG NO.	SH.	REV
A231-1300-C001		

SITE NOTES

1. ALL DIMENSIONS SHOWN ARE TO THE FACE OF CURB UNLESS OTHERWISE NOTED.
2. ALL CURB RETURN RADII SHALL BE 2' OR 10', AS SHOWN TYPICAL ON THIS PLAN, UNLESS OTHERWISE NOTED.
3. UNLESS OTHERWISE SHOWN, CALLED OUT OR SPECIFIED HEREIN OR WITHIN THE SPECIFICATIONS: PAVEMENT SHALL BE INSTALLED IN ACCORDANCE WITH DETAIL 6 ON SHEET C503. ALL PARKING STALL STRIPES (EXCEPT FOR HANDICAP AND VAN ACCESSIBLE) SHALL BE PAINTED WITH 4" WHITE LANE STRIPES.
4. ALL PARKING LOT SIGN BASE SUPPORTS SHALL BE INSTALLED PER STANDARD DETAIL 9 ON SHEET C504.
5. WALK AND SIDEWALKS SHALL BE 48" MINIMUM IN WIDTH.
6. WALK AND SIDEWALK SURFACES SHALL BE SLIP-RESISTANT BY BROOM FINISH PER SPECIFICATION 03 30 00.
7. WALK AND SIDEWALK SURFACE CROSS SLOPES SHALL NOT EXCEED ¼" PER FOOT (2%).
8. ALL CURBS OR SIDEWALKS INTENDED FOR PUBLIC USE SHALL BE ACCESSIBLE TO PEOPLE WITH PHYSICAL DISABILITIES PER THE CALIFORNIA BUILDING CODE, SECTION 101.4.11 PART 2, TITLE 24.

GRADING NOTES

1. PRIOR TO INSTALLATION OF ANY STORM DRAINAGE, THE CONTRACTOR SHALL EXCAVATE, VERIFY, AND CALCULATE ALL CROSSINGS AND INFORM THE COR OF ANY CONFLICTS PRIOR TO CONSTRUCTION.
2. ALL SLOPES AND AREAS DISTURBED BY CONSTRUCTION AND OR STAGING SHALL BE GRADED SMOOTH. ANY AREAS DISTURBED FOR ANY REASON PRIOR TO FINAL ACCEPTANCE OF THE PROJECT SHALL BE CORRECTED BY THE CONTRACTOR AT NO ADDITIONAL COST TO THE GOVERNMENT.
3. UNLESS OTHERWISE SHOWN, CALLED OUT OR SPECIFIED HEREIN OR WITHIN THE SPECIFICATIONS:

   A. SUBGRADE PREPARATION
   THE SUBGRADE SOIL IN AREAS TO RECEIVE ENGINEERED FILL SHOULD BE SCARIFIED TO A DEPTH OF AT LEAST 6 INCHES, MOISTURE CONDITIONED TO AT LEAST 3 PERCENT ABOVE LABORATORY OPTIMUM MOISTURE CONTENT, AND COMPACTED TO 87 TO 92 PERCENT RELATIVE COMPACTION AS DETERMINED BY ASTM D1557.

   THE COMPACTED SURFACE SHOULD BE FIRM AND UNYIELDING AND SHOULD BE PROTECTED FROM DAMAGE CAUSED BY TRAFFIC OR WEATHER. SUBGRADE SOILS SHOULD BE KEPT MOIST DURING CONSTRUCTION. IF THE SUBGRADE IS ALLOWED TO BECOME DRY, IT SHOULD BE MOISTURE CONDITIONED TO ELIMINATE SHRINKAGE CRACKS.

   THE EXISTING FOUNDATIONS ARE TO BE REMOVED AND THE RESULTING EXCAVATIONS SHOULD BE BACKFILLED AND COMPACTED IN ACCORDANCE WITH THE RECOMMENDATIONS PRESENTED IN "ENGINEERED FILL MATERIALS" AND "FILL PLACEMENT AND COMPACTION".

   B. ENGINEERED FILL MATERIALS
   IMPORTED MATERIALS USED FOR ENGINEERED FILL SHOULD NOT CONTAIN ROCKS OR LUMPS LARGER THAN 4 INCHES IN GREATEST DIMENSION, CONTAIN NO MORE THAN 15 PERCENT LARGER THAN 2.5 INCHES, AND HAVE A PLASTICITY INDEX OF LESS THAN 25.

   C. FILL PLACEMENT AND COMPACTION
   ENGINEERED FILL CONSISTING OF IMPORTED MATERIAL OR ON-SITE SOIL WHICH IS NOT EXPANSIVE SHOULD BE COMPACTED TO AT LEAST 90 PERCENT RELATIVE COMPACTION AS DETERMINED BY ASTM D1557 AT A MOISTURE CONTENT SLIGHTLY ABOVE LABORATORY OPTIMUM. ENGINEERED FILL CONSISTING OF NATIVE EXPANSIVE SOILS SHOULD BE COMPACTED TO 87 TO 92 PERCENT RELATIVE COMPACTION AT A MOISTURE CONTENT OF AT LEAST 3 PERCENT ABOVE LABORATORY OPTIMUM MOISTURE CONTENT. THE UPPER SIX INCHES OF SOIL BENEATH ASPHALT CONCRETE PAVEMENTS SHOULD BE COMPACTED TO AT LEAST 92 PERCENT RELATIVE COMPACTION. FILL MATERIAL SHOULD BE SPREAD AND COMPACTED IN LIFTS NOT EXCEEDING 8 INCHES IN PRE-COMPACTED THICKNESS. SOIL SHOULD BE BACKFILLED USING MECHANICAL MEANS ONLY; NO JETTING. IN ORDER TO ACHIEVE SATISFACTORY COMPACTION OF THE SUBGRADE AND FILL MATERIALS, IT MAY BE NECESSARY TO ADJUST THE WATER CONTENT AT THE TIME OF CONSTRUCTION. THIS MAY REQUIRE THAT WATER BE ADDED TO SOILS THAT ARE TOO DRY, OR THAT AERATION BE PERFORMED FOR SOILS THAT ARE TOO WET.

   D. PIPE BEDDING AND TRENCH BACKFILL
   UTILITY PIPES SHOULD BE BEDDED AND SHADED WITH CLEAN, GRANULAR MATERIAL CONFORMING TO THE MANUFACTURER'S SPECIFICATIONS. ABOVE THE PIPE SHADING, TRENCHES SHOULD BE BACKFILLED WITH MATERIALS SATISFYING THE CRITERIA DESCRIBED ABOVE FOR FILL, PLACED IN LIFTS OF APPROXIMATELY 8 INCHES IN PRE-COMPACTED THICKNESS. TRENCH BACKFILL MATERIAL SHOULD BE COMPACTED AS DISCUSSED IN "FILL PLACEMENT AND COMPACTION", WITH THE EXCEPTION THAT IF IMPORTED "CLEAN" SAND IS USED FOR TRENCH BACKFILL, IT SHOULD BE COMPACTED TO AT LEAST 95 PERCENT RELATIVE COMPACTION AS DETERMINED BY ASTM D1557, WITH SUFFICIENT WATER TO PREVENT THE SOIL FROM "BULKING" DURING COMPACTION. THE UPPER 3 FEET OF TRENCH BACKFILL BELOW SLABS AND PAVEMENTS SHOULD BE COMPACTED TO AT LEAST 92 PERCENT RELATIVE COMPACTION.

4. ALL DOMESTIC AND SANITARY SEWER DRAIN PIPE BEDDING SHALL BE INSTALLED PER DETAIL 4 ON SHEET C503.

CIVIL NOTES

1. PROTECTION: PROTECT (E) UTILITIES, PROPERTY AND EQUIPMENT. OBTAIN (E) UTILITY INFORMATION FROM GIS, AND SURVEY (E) UNDERGROUND UTILITIES PRIOR TO ANY EXCAVATION WORK. LIMIT SURFACE LOADING TO 8,000 LBS PER SQUARE FOOT IN PAVEMENT AREAS, AND 2,000 LBS PER SQUARE FOOT FOR NON-PAVED AREAS.
2. ERODED SEDIMENTS AND OTHER POLLUTANTS MUST BE RETAINED ON-SITE AND MAY NOT BE TRANSPORTED FROM THE SITE VIA SHEET FLOW, SWALES, AREA DRAINS, NATURAL DRAINAGE COURSES OR WIND.
3. STOCKPILES OR EARTH AND OTHER CONSTRUCTION RELATED MATERIALS MUST BE PROTECTED FROM BEING TRANSPORTED FROM THE SITE BY THE FORCES OF WIND OR WATER. EXCESS SOIL STOCKPILE SHALL BE STORED AS SHOWN ON SHEET C108.
4. FUELS, OILS, SOLVENTS, AND OTHER TOXIC MATERIALS MUST BE STORED IN ACCORDANCE WITH THEIR LISTING AND ARE NOT TO CONTAMINATE THE SOIL AND SURFACE WATERS. ALL APPROVED STORAGE CONTAINERS ARE TO BE PROTECTED FROM THE WEATHER. SPILL MAY NOT BE WASHED INTO THE DRAINAGE SYSTEM. EXCESS OR WASTE CONCRETE MAY NOT BE WASHED INTO THE PUBLIC WAY OR ANY OTHER DRAINAGE SYSTEM. PROVISIONS SHALL BE MADE TO RETAIN CONCRETE WASTES ON-SITE UNTIL THEY CAN BE DISPOSED OF AS SOLID WASTE. TRASH AND CONSTRUCTION RELATED SOLID WASTES MUST BE DEPOSITED INTO A COVERED RECEPTACLE TO PREVENT CONTAMINATION OF RAINWATER AND DISPERSAL BY WIND.
5. SEDIMENTS AND OTHER MATERIALS MAY NOT BE TRACKED FROM THE SITE BY VEHICLE TRAFFIC. THE CONSTRUCTION ENTRANCE ROADWAYS MUST BE STABILIZED SO AS TO INHIBIT SEDIMENTS FROM BEING DEPOSITED INTO THE PUBLIC WAY. ACCIDENTAL DEPOSITIONS MUST BE SWEPT UP IMMEDIATELY AND MAY NOT BE WASHED DOWN BY RAIN OR OTHER MEANS. ANY SLOPES WITH DISTURBED SOILS OR DENUDED OF VEGETATION MUST BE STABILIZED SO AS TO INHIBIT EROSION BY WIND AND WATER.
6. CONTRACTOR TO VERIFY VERTICAL CONTROL BASED OFF OF ORIGINAL CIVIL ENGINEERS GRADING PLANS AND SURVEYORS ON SITE CONTROL. IF VERTICAL CONFLICTS ARE FIELD MEASURED, THE CONTRACTOR IS TO CALL THE GOVERNMENT COR FOR CLARIFICATION.
7. DUST RESULTING FROM SALVAGE, DEMOLITION AND REMOVAL WORK SHALL BE CONTROLLED TO PREVENT THE IMPOSITION OF A NUISANCE OR HAZARDOUS CONDITION TO THE ADJOINING PORTION OF THE PROJECT. THE USE OF WATER WILL NOT BE PERMITTED WHEN SUCH USE WOULD RESULT IN HAZARDOUS, OR OTHERWISE OBJECTIONABLE CONDITIONS.

CHAIN LINK FENCE NOTES

1. ALL GATES TO BE CENTERED ON EXISTING ROAD OR THE CURRENT GATE OPENING.
2. CHAIN LINK FENCE SHALL CONFORM TO PROJECT SPECIFICATIONS.
3. ALL MATERIAL DIMENSIONS AND WEIGHTS ON THIS SHEET ARE NOMINAL UNLESS OTHERWISE INDICATED.
4. CHAIN LINK MATERIAL SHALL BE A LEAST 9-GAUGE ZINC COATED STEEL-WIRE-CHAIN LINK WITH MESH OPENINGS NOT LARGER THAN 2-INCHES PER SIDE AND SHALL BE TWISTED AND BARBED SELVAGE AT TOP AND BOTTOM.
5. LATCHES AND HINGES SHALL BE GALVANIZED STEEL OF STANDARD MANUFACTURE. HINGES SHALL BE PLACED AS SHOWN ON THE DETAILS FOR SAFETY AND TO PREVENT TAMPERING.
6. ALL GATE WIRE, TIES, CLIPS, CLAMPS, STAPLES AND OTHER WIRE APPURTENANCES SHALL BE GALVANIZED IN ACCORDANCE WITH ASTM 153/153M.
7. CONCRETE SHALL REACH A MINIMUM COMPRESSIVE STRENGTH OF 3,000 PSI AT 28 DAYS AND SHALL INCLUDE AIR-ENTRAINING ADMIXTURES IN CONFORMANCE WITH ASTM C260.
8. CONCRETE FOOTINGS SHALL HAVE TOPS CROWNED AT GROUND LEVEL TO ALLOW DRAINAGE AWAY FROM THE POST.
9. ALL GATE FRAMES SHALL BE CONNECTED AND SECURED BY WELDING EACH JOINT. GATE FRAME PIECES SHALL BE ACCURATELY CUT TO FORM A TIGHT JOINT BEFORE WELDING. FRAME SHALL BE HOT DIPPED GALVANIZED AFTER FABRICATION.
10. ALL GATE FASTENING AND HINGE HARDWARE SHALL BE SECURED IN PLACE BY PEENING OR SPOT WELDING TO ALLOW PROPER OPERATION OF COMPONENTS, BUT PREVENT DISASSEMBLY OF FENCING OR REMOVAL OF GATES.
11. FENCE MAY BE CONSTRUCTED WITH EITHER ROUND PIPE OR ROLL-FORMED STEEL COMPONENTS. THE CONTRACTOR SHALL STATE THE TYPE OF CONSTRUCTION AND TYPE OF POSTS TO BE USED ON SHOP DRAWINGS. CONTRACTOR SHALL PROVIDE CALCULATIONS TO VERIFY THAT THE FENCE SYSTEM PROPOSED IS EQUIVALENT TO THE PIPE POST SYSTEM SHOWN ON DETAIL 3 ON SHEET C501 AND DETAIL 3 ON SHEET C502.
12. GATE LOCKS WILL BE FURNISHED BY NASA AND INSTALLED BY THE CONTRACTOR.

REGISTERED PROFESSIONAL ENGINEER ERIC CHRISTOPHER FRAMPTON No. 64567 CIVIL STATE OF CALIFORNIA

ZONE	LETTER	DESCRIPTION	DRAWN	DATE	APPRVD

REVISIONS

DRAWN A.FERNANDEZ	DATE	
DESIGNED E.FRAMPTON	DATE	
CHECKED R.CROENI	DATE	
A&E PM G.HITE	DATE	
NASA PM W.LEE	DATE	
REQUESTER G.RAICHE	DATE	
R&QA	DATE	
SAFETY	DATE	
SUPERVISOR S.FRANKEL	DATE	

Ames Research Center
Moffett Field, California

REPLACE ARC JET COMPLEX SVS BOILER
CIVIL
CIVIL NOTES AND LEGEND

SIZE	CAGE CODE	REV
D	25307	A
SCALE NO SCALE	INDEX	SHEET OF

231-1300-C001

FILE NAME: 231-C001.DWG 1/28/2013

DWG: W:\2011 Projects\051110\D\Dwg\Civil\231-C001.dwg Version: 18.1s (LMS Tech) User: KatieA
DATE: Jan 25, 2013 - 9:02:28 am

DWG NO.	SH.	REV
A231-1300-C101		

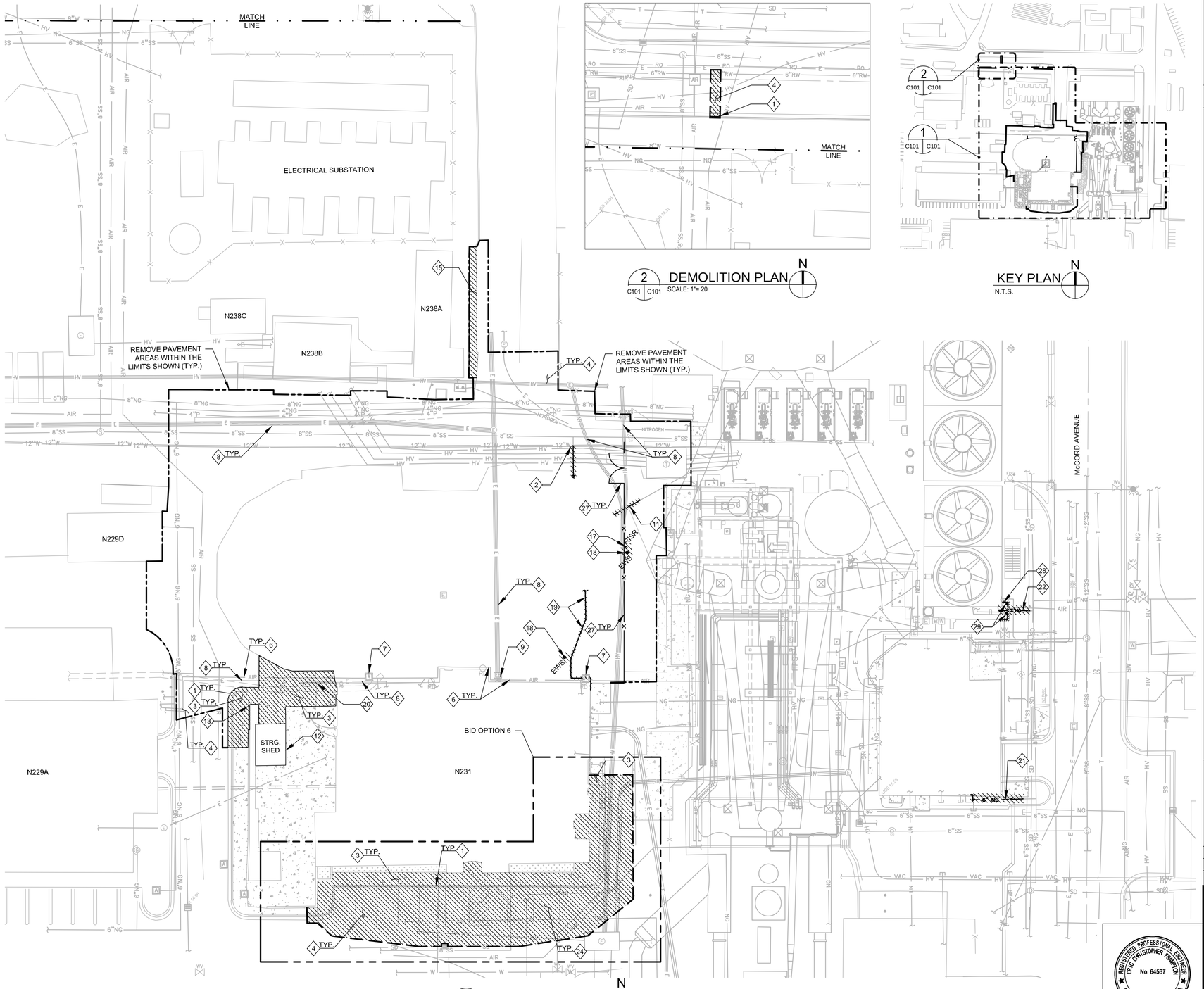

1 DEMOLITION PLAN
C101 C101 SCALE: 1"= 20'

2 DEMOLITION PLAN
C101 C101 SCALE: 1"= 20'

KEY PLAN
N.T.S.

1" = 20' 20 0 20 40

SHEET NOTES

1. ALL PIPING AND EQUIPMENT ON THIS DEMOLITION PLAN ARE EXISTING UNLESS OTHERWISE NOTED.
2. EXISTING UTILITIES TO BE PROTECTED DURING DEMOLITION. BROKEN/DAMAGED UTILITIES SHALL BE REPAIRED AT THE CONTRACTOR'S EXPENSE.
3. SEE SHEET G006 FOR MORE COMPLETE DESCRIPTION OF EACH BID OPTION.
4. SEE DETAIL 7 ON SHEET 505 FOR PIPE CAPPING.

KEY NOTES

1. DEMOLISH AND REMOVE EXISTING CONCRETE CURB AND GUTTER.
2. CAP AND REMOVE EXISTING SANITARY SEWER LATERAL TO THE LIMITS SHOWN.
3. DEMOLISH AND REMOVE EXISTING CONCRETE SIDEWALK WITHIN LIMITS SHOWN ON DETAIL 7 ON SHEET C504.
4. DEMOLISH AND REMOVE EXISTING ASPHALTIC PAVEMENT WITHIN LIMITS SHOWN ON DETAIL 7 ON SHEET C504.
5. NOT USED.
6. EXISTING AIR LINE TO REMAIN AND BE PROTECTED DURING DEMOLITION AND CONSTRUCTION AS SHOWN ON DETAIL 1 ON SHEET 501.
7. EXISTING AIR VALVE BOX TO REMAIN AND BE PROTECTED DURING DEMOLITION AND CONSTRUCTION (CONTRACTOR TO RAISE THE VALVE BOX TO MATCH NEW FINISH GRADE).
8. EXISTING ELECTRICAL CONDUITS TO REMAIN AND BE PROTECTED DURING DEMOLITION AND CONSTRUCTION AS SHOWN ON DETAIL 1 ON SHEET C501.
9. EXISTING ELECTRICAL VAULT TO REMAIN AND BE PROTECTED DURING DEMOLITION AND CONSTRUCTION (CONTRACTOR TO RAISE THE ELECTRICAL VAULT TO MATCH NEW FINISH GRADE).
10. NOT USED.
11. CAP AND REMOVE EXISTING ABANDONED CAST IRON WATER LINE TO THE LIMITS SHOWN.
12. RELOCATE EXISTING STORAGE SHED (REFERENCE SHEET C102).
13. DEMOLISH AND REMOVE EXISTING BLOCK WALL AND FOUNDATION AS SHOWN ON DETAIL 5 ON SHEET C501.
14. NOT USED.
15. DEMOLISH AND REMOVE 3'± CONCRETE TO MATCH PROPOSED FLOW LINE (REFERENCE SHEET C103).
16. NOT USED.
17. DEMOLISH AND REMOVE EXISTING RISER.
18. DEMOLISH AND REMOVE EXISTING EYE WASH STATION.
19. CAP AND REMOVE EXISTING ABOVE GROUND WATER LINE.
20. REMOVE EXISTING HANDRAIL.
21. CAP AND REMOVE EXISTING 6"Ø NATURAL GAS LINE TO THE LIMITS SHOWN.
22. CAP AND REMOVE EXISTING 2"Ø NATURAL GAS LINE TO LIMITS SHOWN.
23. NOT USED.
24. REMOVAL OF ACCESSIBLE PARKING LOT PAVING AND PAINTING.
25. NOT USED.
26. NOT USED.
27. REMOVE NOx SYSTEM FENCE DURING CONSTRUCTION.
28. REMOVE CONCRETE APRON.
29. REMOVE BOLLARDS.

ZONE	LETTER	DESCRIPTION	DRAWN	DATE	APPRVD

REVISIONS

DRAWN A.FERNANDEZ	DATE
DESIGNED E.FRAMPTON	DATE
CHECKED R.CROENI	DATE
A&E PM G.HITE	DATE
NASA PM W.LEE	DATE
REQUESTER G.RAICHE	DATE
R&QA	DATE
SAFETY	DATE
SUPERVISOR S.FRANKEL	DATE

REGISTERED PROFESSIONAL ENGINEER ERIC CHRISTOPHER FRAMPTON No. 64567 CIVIL STATE OF CALIFORNIA

Ames Research Center
Moffett Field, California

REPLACE ARC JET COMPLEX SVS BOILER
CIVIL
DEMOLITION PLAN

SIZE	CAGE CODE	DWG NO.	REV
D	25307	231-1300-C101	
SCALE 1"=20'		INDEX	SHEET OF

FILE NAME: 231-C101.DWG 1/28/2013

DWG: W:\2011 Projects\05111000\Dwg\Civil\231-C101.dwg Version: 18.1s (LMS Tech) User: KatieA
DATE: Jan 25, 2013 - 8:02:51 am

DWG NO.	SH.	REV
A231-1300-C102		

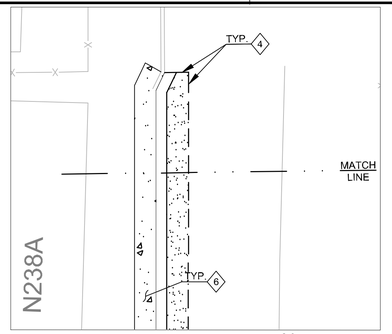

2 SITE PERIMETER
C102 C102 SCALE: 1"= 10'

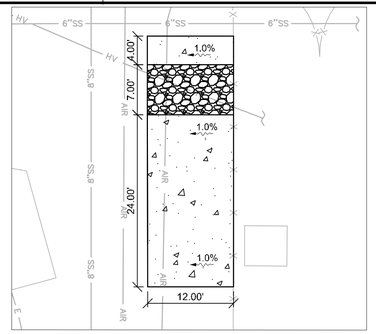

3 CONCRETE PAD FOR WATER UTILITIES
C102 C102 SCALE: 1"= 10'

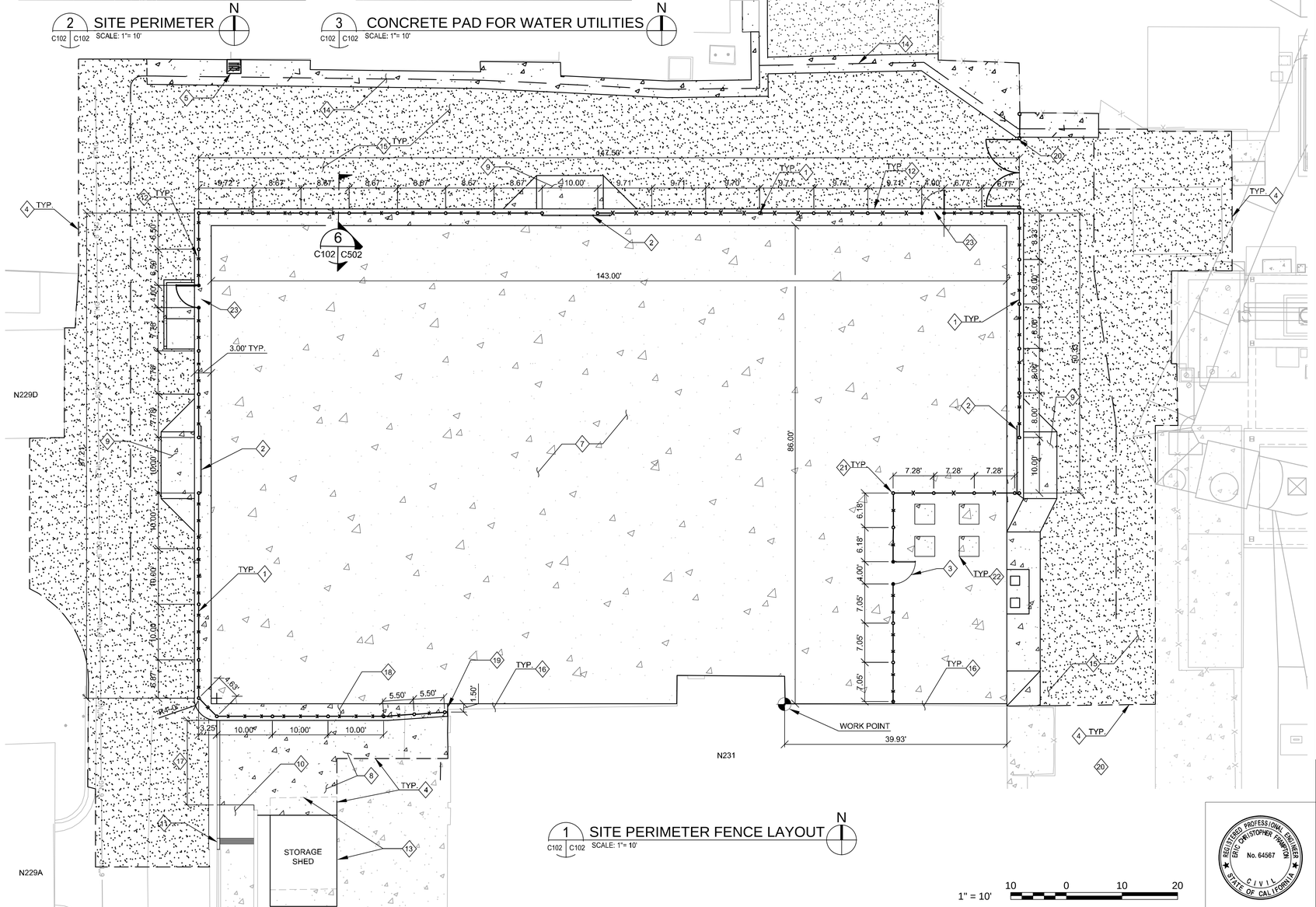

1 SITE PERIMETER FENCE LAYOUT
C102 C102 SCALE: 1"= 10'

1" = 10'

SHEET NOTES

1. REFER TO SHEET C001 FOR CHAINLINK FENCE NOTES.

KEY NOTES

1. PROVIDE 7'-0" HIGH CHAINLINK SECURITY FENCE AS SHOWN ON DETAIL 3 ON SHEET C501 AND LOCK.
2. PROVIDE CHAINLINK SLIDING GATE W/ SELF ACTUATED FACE ROLLER AS SHOWN ON DETAIL 3 ON SHEET C502 AND LOCK.
3. PROVIDE CARD READER ACCESS GATE AS SHOWN ON DETAIL 8 ON SHEET C501 AND ON SHEET E209.
4. SAW CUT LINE.
5. DRY WELL AS SHOWN ON DETAIL 5 ON SHEET C502.
6. CONSTRUCT CONCRETE SIDEWALK / RAMP (TO MATCH PROPOSED FLOW LINE).
7. CONCRETE MAT SLAB (REFERENCE SHEET S301).
8. CONSTRUCT CONCRETE SIDEWALK AS SHOWN ON DETAIL 8 ON SHEET C504.
9. CONSTRUCT CONCRETE RAMP.
10. CONSTRUCT ACCESSIBLE CONCRETE RAMP AS SHOWN ON DETAIL 10 ON SHEET C503.
11. CONSTRUCT CONCRETE CURB AND GUTTER AS SHOWN ON DETAIL 3 ON SHEET C503.
12. CHAINLINK FENCE POST FOUNDATION AND CORING AS SHOWN ON DETAIL 6 ON SHEET C502.
13. RELOCATE STORAGE SHED SOUTH APPROXIMATELY 3' OF EXISTING LOCATION.
14. PROVIDE CONCRETE SWALE AS SHOWN ON DETAIL 1 ON SHEET C504.
15. PROVIDE ASPHALTIC CONCRETE PAVEMENT AS SHOWN ON DETAIL 6 ON SHEET C503.
16. PROVIDE CONCRETE FILLER BETWEEN MAT SLAB AND EXISTING BUILDING AS SHOWN ON DETAIL 4 ON SHEET C501.
17. PROVIDE VEHICLE ACCESS (FLUSH TOP OF CURB WITH FLOW LINE, TC=FL).
18. CONCRETE SIDEWALK THICKENED SECTION AS SHOWN ON DETAIL 2 ON SHEET C501.
19. CONCRETE TAPERED TO 2.2 FT.
20. REINSTALL NOx GATE ONCE SVS BOILER CONSTRUCTION IS COMPLETE.
21. FENCE POST BASE PLATE TYPICAL ON CONCRETE MAT SLAB AS SHOWN ON DETAIL 9 ON SHEET C501.
22. FOUNDATIONS FOR PIPE SUPPORT. REFERENCE STRUCTURAL SHEETS FOR DETAILS.
23. PROVIDE MAN GATE AS SHOWN ON DETAIL 12 ON SHEET C503.

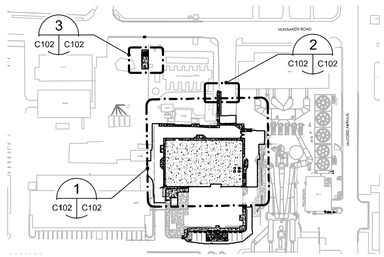

KEY PLAN
N.T.S.

ZONE	LETTER	DESCRIPTION	DRAWN	DATE	APPRVD

REVISIONS

DRAWN A.FERNANDEZ	DATE
DESIGNED E.FRAMPTON	DATE
CHECKED R.CROENI	DATE
A&E PM G.HITE	DATE
NASA PM W.LEE	DATE
REQUESTER G.RAICHE	DATE
R&QA	DATE
SAFETY	DATE
SUPERVISOR S.FRANKEL	DATE

REGISTERED PROFESSIONAL ENGINEER ERIC CHRISTOPHER FRAMPTON No. 64567 CIVIL STATE OF CALIFORNIA

Ames Research Center
Moffett Field, California

REPLACE ARC JET COMPLEX SVS BOILER
CIVIL
SITE PERIMETER FENCE LAYOUT

SIZE	CAGE CODE		REV
D	25307	A 231-1300-C102	
SCALE 1"=10'		INDEX	SHEET OF

FILE NAME: 231-C102.DWG 1/28/2013

DWG: W:\2011 Projects\05110\Dwg\Civil\231-C102.dwg Version: 18.1s (LMS Tech) User: KatieA
DATE: Jan 25, 2013 - 9:03:13 am

DWG NO.	SH.	REV
A231-1300-C103		

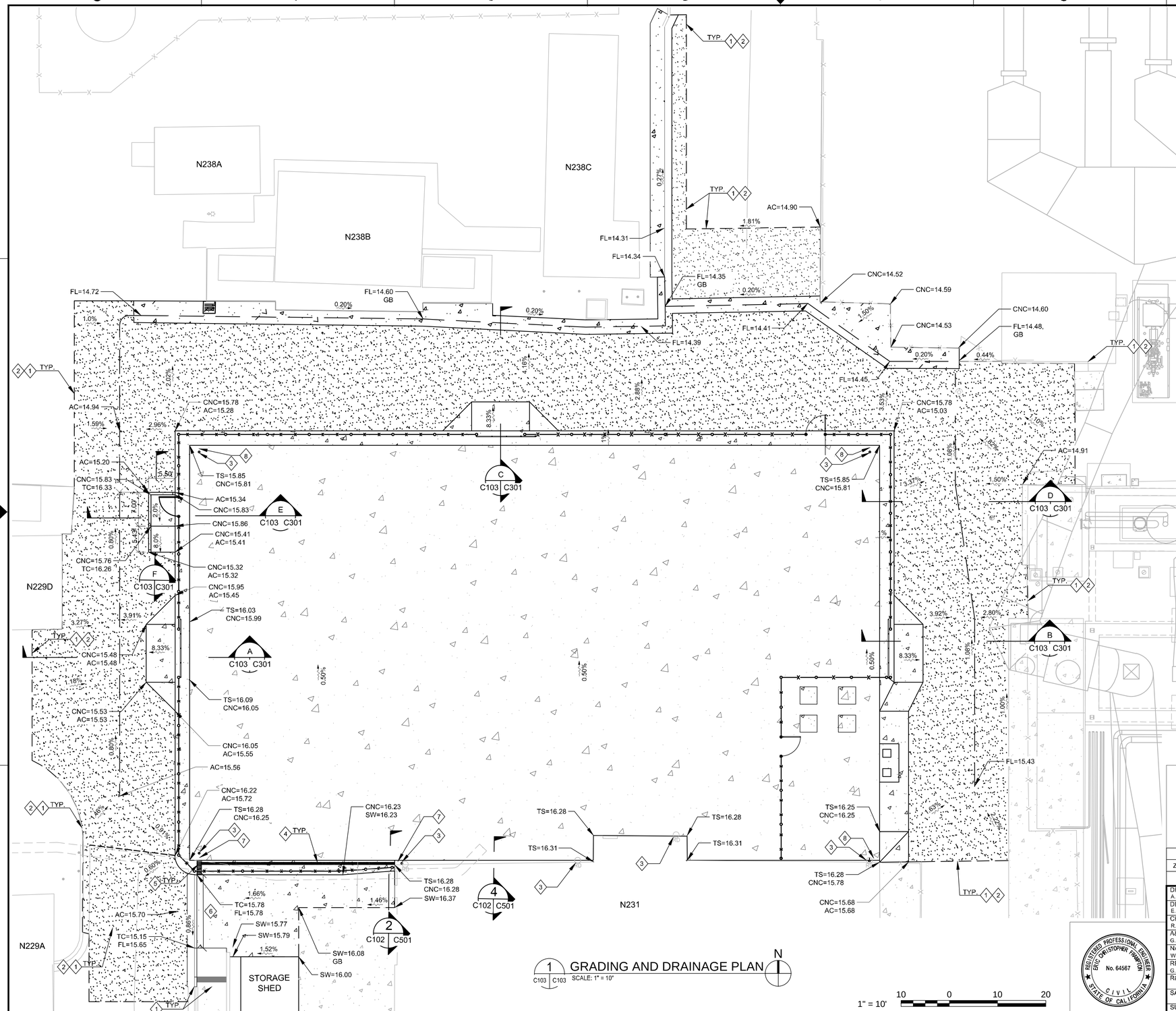

1 GRADING AND DRAINAGE PLAN
C103 C103 SCALE: 1" = 10"

N

1" = 10' 10 0 10 20

KEY NOTES

1. MATCH EXISTING GRADE AS SHOWN ON DETAIL 7 ON SHEET C502.
2. SAW CUT LINE.
3. ROOF DRAIN CONNECTIONS.
4. TRENCH DRAIN AS SHOWN ON DETAIL 7 ON SHEET C501.
5. TRENCH DRAIN WIDE AS SHOWN ON DETAIL 6 ON SHEET C501.
6. VEHICLE ACCESS (FLUSH TOP OF CURB WITH FLOW LINE, TC=FL).
7. PROVIDE HARD PIPING FROM ROOF DRAIN TO TRENCH DRAIN AS SHOWN ON DETAIL 9 ON SHEET C505.
8. PROVIDE SPLASH BLOCK FOR ROOF DRAIN AS SHOWN ON DETAIL 11 ON SHEET C505.

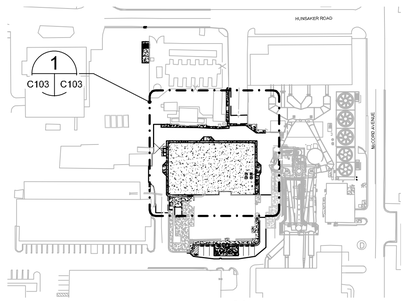

KEY PLAN
N.T.S.

N

ZONE	LETTER	DESCRIPTION	DRAWN	DATE	APPRVD

REVISIONS

DRAWN A.FERNANDEZ	DATE	
DESIGNED E.FRAMPTON	DATE	
CHECKED R.CROENI	DATE	
A&E PM G.HITE	DATE	
NASA PM W.LEE	DATE	
REQUESTER G.RAICHE	DATE	
R&QA	DATE	
SAFETY	DATE	
SUPERVISOR S.FRANKEL	DATE	

REGISTERED PROFESSIONAL ENGINEER
ERIC CHRISTOPHER FRAMPTON
No. 64567
CIVIL
STATE OF CALIFORNIA

Ames Research Center
Moffett Field, California

REPLACE ARC JET COMPLEX SVS BOILER
CIVIL

GRADING AND DRAINAGE PLAN
SVS BOILER PLANT

SIZE	CAGE CODE	DWG NO.	REV
D	25307	231-1300-C103	A
SCALE 1"=10'		INDEX	SHEET OF

FILE NAME: 231-C103.DWG 1/28/2013

DWG: W:\2011 Projects\05111000\Dwg\Civil\231-C103.dwg Version: 18.1s (LMS Tech) User: KatieA
DATE: Jan 25, 2013 - 9:03:39 am

DWG NO.	SH.	REV
A231-1300-C104		

SHEET NOTES

1. SEE SHEET G006 FOR MORE COMPLETE DESCRIPTION OF EACH BID OPTION.

KEY NOTES

1. MATCH EXISTING GRADE.
2. SAWCUT LINE.
3. REMOVAL OF ACCESSIBLE PARKING LOT PAVING AND PAINTING.

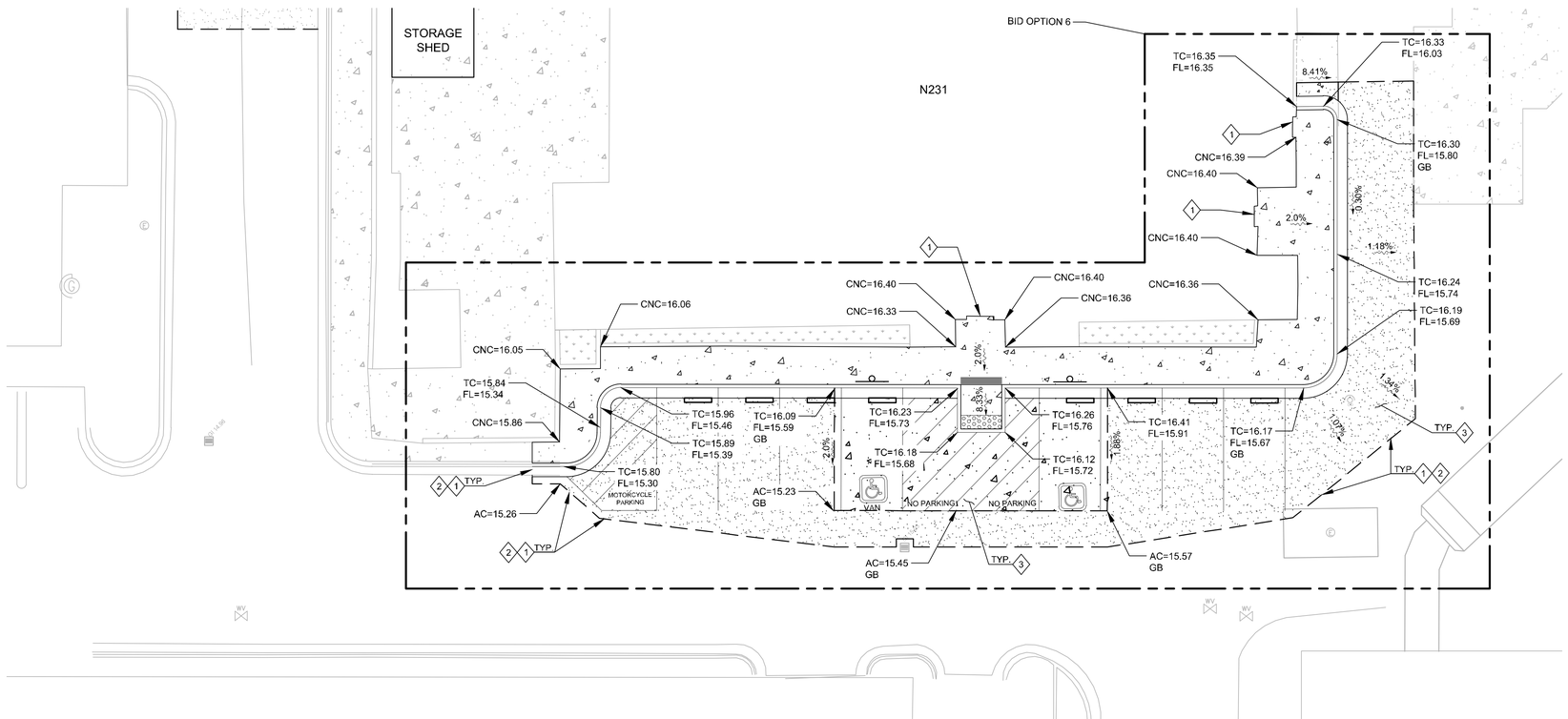

1 GRADING AND DRAINAGE PLAN
C104 C104
SCALE: 1" = 10"

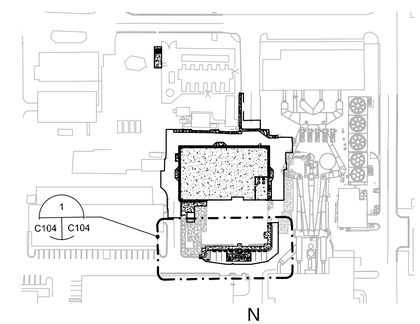

KEY PLAN
N.T.S.

SCALE: 1"=10' 10 0 10 20

ZONE	LETTER	DESCRIPTION	DRAWN	DATE	APPRVD

REVISIONS

DRAWN A.FERNANDEZ	DATE
DESIGNED E.FRAMPTON	DATE
CHECKED R.CROENI	DATE
A&E PM G.HITE	DATE
NASA PM W.LEE	DATE
REQUESTER G.RAICHE	DATE
R&QA	DATE
SAFETY	DATE
SUPERVISOR S.FRANKEL	DATE

REGISTERED PROFESSIONAL ENGINEER ERIC CHRISTOPHER FRAMPTON No. 64567 CIVIL STATE OF CALIFORNIA

Ames Research Center
Moffett Field, California

REPLACE ARC JET COMPLEX SVS BOILER
CIVIL

GRADING AND DRAINAGE PLAN N231 PARKING LOT

SIZE	CAGE CODE		REV
D	25307	231-1300-C104	
SCALE 1"=10'		INDEX	SHEET OF

FILE NAME: 231-C104.DWG 1/28/2013

DWG: W:\0211 Projects\0511100\Dwg\Civil\231-C104.dwg Version: 18.1s (LMS Tech) User: KatieA
DATE: Jan 25, 2013 - 9:03:59 am

DWG NO.	SH.	REV
A231-1300-C105		

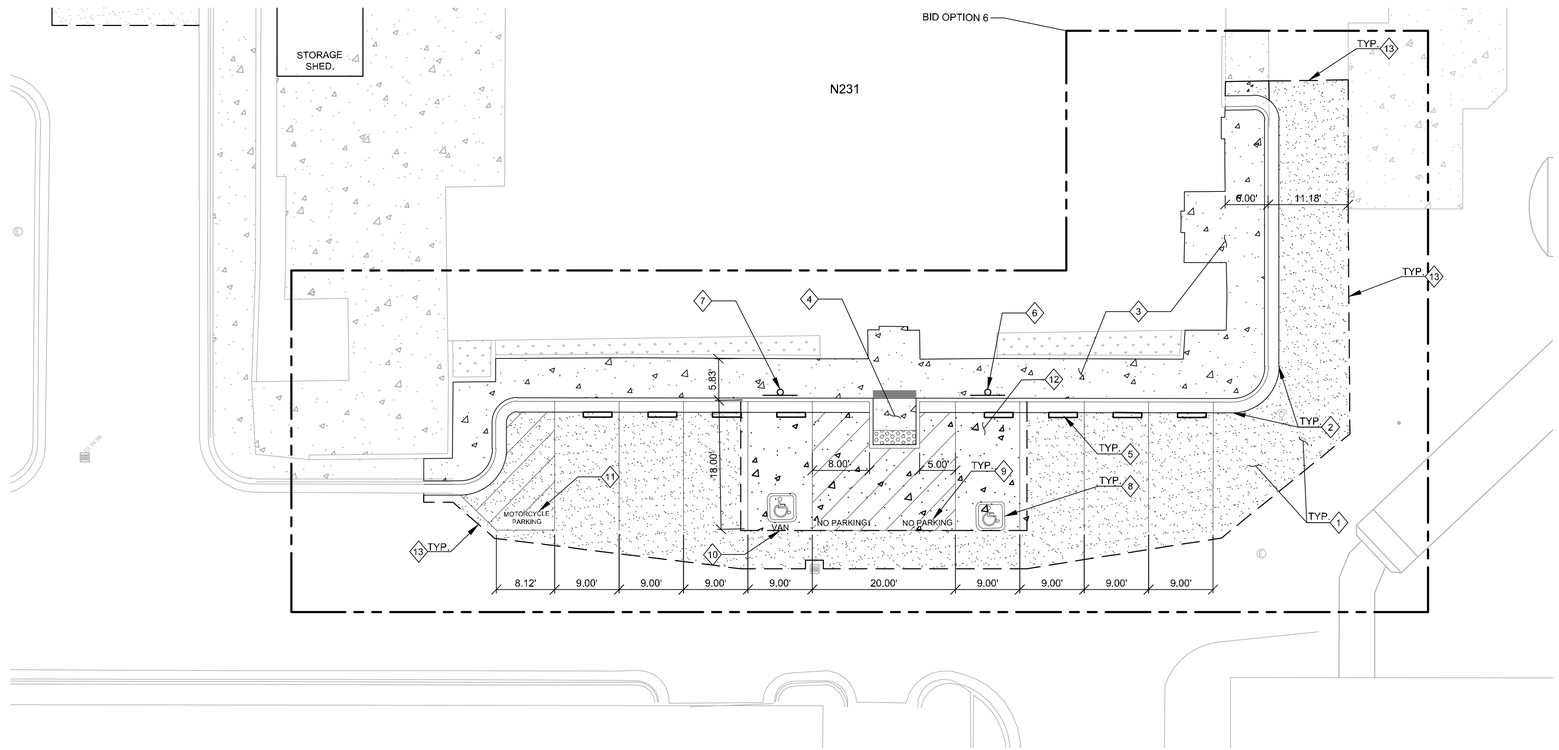

1 C105 C105 BUILDING N231 ADA PARKING PLAN
SCALE: 1"= 10'

N

SCALE: 1"=10' 10 0 10 20

SHEET NOTES

1. EXISTING UTILITIES TO BE PROTECTED DURING DEMOLITION. BROKEN/DAMAGED UTILITIES SHALL BE REPAIRED AT THE CONTRACTOR'S EXPENSE.
2. SEE SHEET G006 FOR MORE COMPLETE DESCRIPTION OF EACH BID OPTION.

KEY NOTES

1. ASPHALTIC CONCRETE PAVEMENT AS SHOWN ON DETAIL 6 ON SHEET C503.
2. CONCRETE CURB AND GUTTER AS SHOWN ON DETAIL 3 ON SHEET C503.
3. CONCRETE SIDEWALK AS SHOWN ON DETAIL 8 ON SHEET C504.
4. ACCESSIBLE CONCRETE RAMP WITH TRUNCATED DOMES AS SHOWN ON DETAIL 11 ON SHEET C503.
5. CONCRETE WHEEL STOP AS SHOWN ON DETAIL 1 ON SHEET C503.
6. ACCESSIBLE PARKING SIGN AS SHOWN ON DETAIL 7 ON SHEET C503.
7. VAN ACCESSIBLE PARKING SIGN AS SHOWN ON DETAIL 7 ON SHEET C503.
8. ACCESSIBLE PAVEMENT STRIPING SYMBOL AS SHOWN ON DETAIL 8 ON SHEET C503.
9. "NO PARKING" PAVEMENT STRIPING AS SHOWN ON DETAIL 9 ON SHEET C503.
10. "VAN" PAVEMENT STRIPING.
11. "MOTORCYCLE PARKING" PAVEMENT STRIPING.
12. CONCRETE PAVEMENT AS SHOWN ON DETAIL 5 ON SHEET C503.
13. SAWCUT LINE.

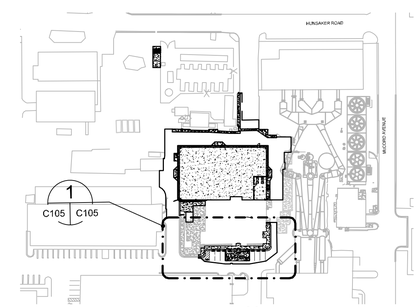

KEY PLAN
N.T.S.

N

ZONE	LETTER	DESCRIPTION	DRAWN	DATE	APPRVD

REVISIONS

DRAWN A.FERNANDEZ	DATE	
DESIGNED E.FRAMPTON	DATE	
CHECKED R.CROENI	DATE	
A&E PM G.HITE	DATE	
NASA PM W.LEE	DATE	
REQUESTER G.RAICHE	DATE	
R&QA	DATE	
SAFETY	DATE	
SUPERVISOR S.FRANKEL	DATE	

REGISTERED PROFESSIONAL ENGINEER ERIC CHRISTOPHER FRAMPTON No. 64567 CIVIL STATE OF CALIFORNIA

Ames Research Center
Moffett Field, California

REPLACE ARC JET COMPLEX SVS BOILER
CIVIL
BUILDING N231 ADA PARKING PLAN

SIZE	CAGE CODE		REV
D	25307	231-1300-C105	
SCALE 1"=10'		INDEX	SHEET OF

FILE NAME: 231-C105.DWG 1/28/2013

DWG: W:\2011 Projects\0511100\Dwg\Civil\231-C105.dwg Version: 18.1s (LMS Tech) User: KatieA
DATE: Jan 25, 2013 - 9:00:52 am

DWG NO.	SH.	REV
A231-1300-C106		

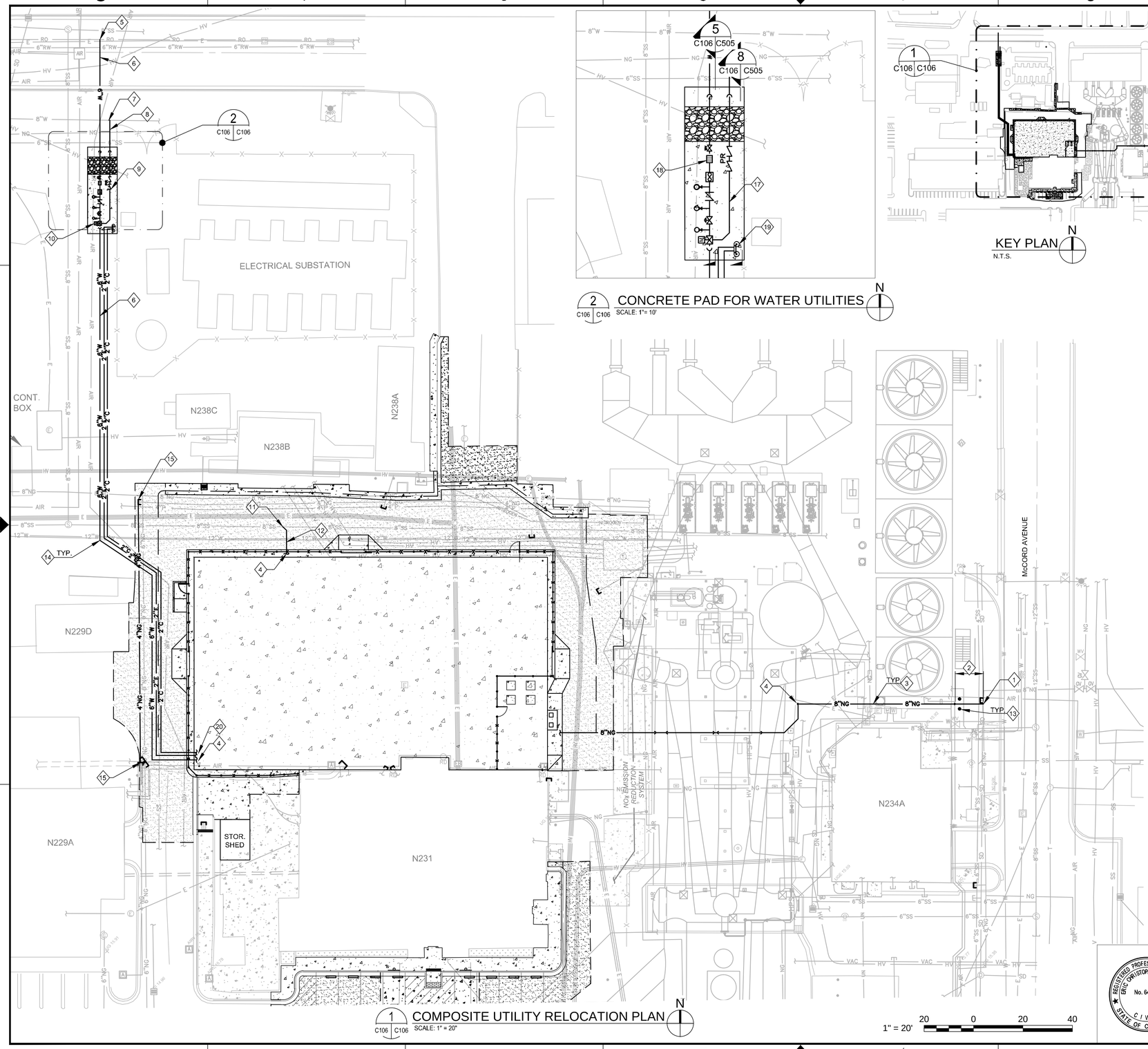

2 C106 C106 CONCRETE PAD FOR WATER UTILITIES
SCALE: 1"= 10'

1 C106 C106 COMPOSITE UTILITY RELOCATION PLAN
SCALE: 1" = 20"

KEY PLAN
N.T.S.

SHEET NOTES

1. RO WATER SUPPLY AND BACK UP DOMESTIC WATER SUPPLY SYSTEM

THE FOLLOWING IS A DESCRIPTION OF THE CURRENT WATER SUPPLY SYSTEM WHICH IS TO BE DUPLICATED. NOTE THAT TWO FACILITIES ARE DESCRIBED BELOW AND ONLY THE ARC JET COMPLEX BOILER(S) SUPPLY IS TO BE DUPLICATED FOR THIS PROJECT.

THE ARC JET COMPLEX (AJC) BOILER AND THE UNITARY PLAN WIND TUNNEL (UPWT) COOLING TOWER SUPPLY RECEIVES RO MAKEUP WATER FROM A COMMON MANIFOLD, FED FROM TANK T-1, VIA TRANSFER PUMPS 15A&B LOCATED AT N271. THE BACKUP SOURCE AT BOTH FACILITIES IS THE MUNICIPAL SUPPLY (HETCH-HETCHY) WHICH IS BACKFLOW PROTECTED BY RP DEVICE AND AIR GAP AT THE AJC BOILER HOUSE AND THE UPWT COOLING TOWER RESPECTIVELY. A FLOW REGULATING VALVE IS INSTALLED IN THE RO WATER SUPPLY LINE AT EACH OF THE RECEIVING POINTS. SUPPLY FLOW TO AJC IS REGULATED TO 320 GPM. THE UPWT COOLING TOWER SUPPLY IS REGULATED TO 120 GPM. THE SUPPLY LINE PRESSURE TO THE TWO FACILITIES IS MAINTAINED AT APPROXIMATELY 60 PSI; THE LINE PRESSURE IS MONITORED AND CONTROLLED BY THE SCADA SYSTEM LOCATED AT N271. DATA ACQUISITION FROM REMOTE LOCATIONS SUCH AS THE AJC BOILER HOUSE, ARE TRANSMITTED VIA THE LOCAL AMES INTRANET. A ROTORK 3-WAY VALVE IS INSTALLED DOWNSTREAM OF THE FLOW REGULATING VALVE AT THE AJC BOILER HOUSE.

A FLOAT VALVE IS INSTALLED DOWNSTREAM OF THE FLOW REGULATING VALVE AT THE UPWT COOLING TOWER RESERVOIR.

THE OPERATION OF THE ROTORK 3-WAY VALVE (CV-B2), IS DESCRIBED AS FOLLOWS:
VALVE CV-B2 IS AUTOMATICALLY OPERATED BY PLC-ICP 7. PLC-ICP 7 IS ONE OF SIX (6) PLC'S MAKING UP THE N-271 SCADA SYSTEM. IT IS INSTALLED ON LOCATION AT THE N234A BOILER HOUSE. TO ASSURE THAT WATER SUPPLY IS ALWAYS AVAILABLE FOR THE AJC BOILER, AN UNINTERRUPTED POWER SUPPLY (ICP-7 UPS) IS INSTALLED AT THE N234A BOILER HOUSE. THIS ASSURES POWER TO PLC-ICP 7. THE SYSTEM IS DESIGNED TO ASSURE OPERATIONS OF CV-B2 IN THE EVENT OF A POWER FAILURE. VALVE CV-B2 IS DESIGNED TO "FAIL OPEN" TO THE MUNICIPAL SUPPLY IN THE EVENT OF A POWER FAILURE.

KEY NOTES

1. NATURAL GAS POINT OF CONNECTION SEE DETAIL 3 ON SHEET C505.
2. NATURAL GAS LINE (UNDER GROUND).
3. NATURAL GAS LINE (ABOVE GROUND). TO BE PAINTED PER SPEC SECTION 09 90 00. LABELED "NG" WITH PAINT CONFIGURATION COLORS ARE YELLOW BACKGROUND AND BLACK TEXT.
4. REFERENCE SHEET M103 FOR CONTINUATION.
5. REVERSE OSMOSIS WATER POINT OF CONNECTION AS SHOWN ON DETAIL 10 ON SHEET C504.
6. 6" REVERSE OSMOSIS WATER SERVICE LINE, FOR BOILER MAKEUP WATER.
7. DOMESTIC WATER SERVICE POINT OF CONNECTION AS SHOWN ON DETAIL 9 ON SHEET C503.
8. 6" DOMESTIC WATER MAIN.
9. PRESSURE REDUCER DOUBLE CHECK VALVE AS SHOWN ON DETAIL 8 ON SHEET C505.
10. PROVIDE NEW 6" TRI-FLOCENTRIC MULTIPURPOSE PLUG VALVE STYLE F AND ROTORK IQT2000 ACTUATOR OR APPROVED EQUAL.
11. SANITARY SEWER POINT OF CONNECTION SEE DETAIL 6 ON SHEET C505.
12. SANITARY SEWER LATERAL.
13. CONCRETE FILLED BOLLARD AS SHOWN ON DETAIL 8 ON SHEET C502.
14. THRUST BLOCKS TO BE CONSTRUCTED AT WATER LINE AT HORIZONTAL AND VERTICAL BENDS AS SHOWN ON DETAIL 4 ON SHEET C505.
15. CONTRACTOR TO VERIFY THAT THE EXISTING SHALLOW 4" STEEL PIPE AS MARKED IS NOT IN USE. IF NOT IN USE, CAP THE LINE AT LOCATIONS SHOWN AND MARK AS ABANDONED ON THE AS-BUILTS; AND

    CONTRACTOR SHALL PROMPTLY NOTIFY COR IN WRITING IF 4" STEEL PIPE IS DETERMINED TO BE LIVE FOR FURTHER DIRECTIONS ON HOW TO PROCEED.
16. PROVIDE CHAIN AND LOCK FOR BACKFLOW PREVENTER.
17. DOMESTIC WATER LINE (ABOVE GROUND). TO BE PAINTED PER SPEC SECTION 09 90 00. LABELED "PCW" WITH PAINT CONFIGURATION COLORS BEING GREEN BACKGROUND AND WHITE TEXT.
18. REVERSE OSMOSIS LINE (ABOVE GROUND). TO BE STAINLESS STEEL AND PAINTED PER SPEC SECTION 09 90 00. LABELED "RO" WITH PAINT CONFIGURATION COLORS BEING GREEN BACKGROUND AND WHITE TEXT.
19. ELECTRIC AND COMMUNICATIONS PANEL SEE DETAIL 10 ON SHEET C505.
20. REFERENCE SHEET E102 FOR CONTINUATION.

ZONE	LETTER	DESCRIPTION	DRAWN	DATE	APPRVD

REVISIONS

DRAWN A.FERNANDEZ	DATE
DESIGNED E.FRAMPTON	DATE
CHECKED R.CROENI	DATE
A&E PM G.HITE	DATE
NASA PM W.LEE	DATE
REQUESTER G.RAICHE	DATE
R&QA	DATE
SAFETY	DATE
SUPERVISOR S.FRANKEL	DATE

REGISTERED PROFESSIONAL ENGINEER ERIC CHRISTOPHER FRAMPTON No. 64567 CIVIL STATE OF CALIFORNIA

Ames Research Center
Moffett Field, California

REPLACE ARC JET COMPLEX SVS BOILER
CIVIL
COMPOSITE UTILITY RELOCATION PLAN

SIZE	CAGE CODE		REV
D	25307	231-1300-C106	
SCALE 1"=20'		INDEX	SHEET OF

FILE NAME: 231-C106.DWG 1/28/2013

DWG: W:\2011 Projects\0511100\Dwg\Civil\231-C106.dwg Version: 18.1s (LMS Tech) User: KalleA
DATE: Jan 25, 2013 - 9:04:17 am

DWG NO.	SH.	REV
A231-1300-C107		

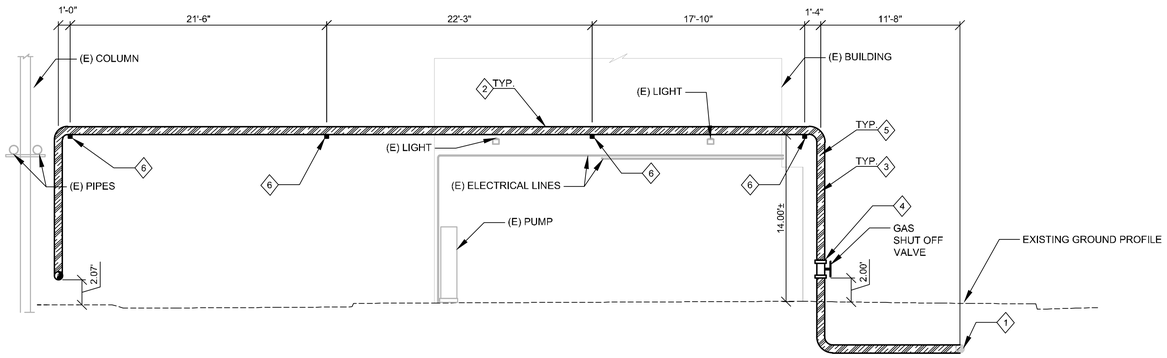

C C107 C107 NATURAL GAS LINE LAYOUT - PROFILE VIEW
SCALE: 1'=6'-0"

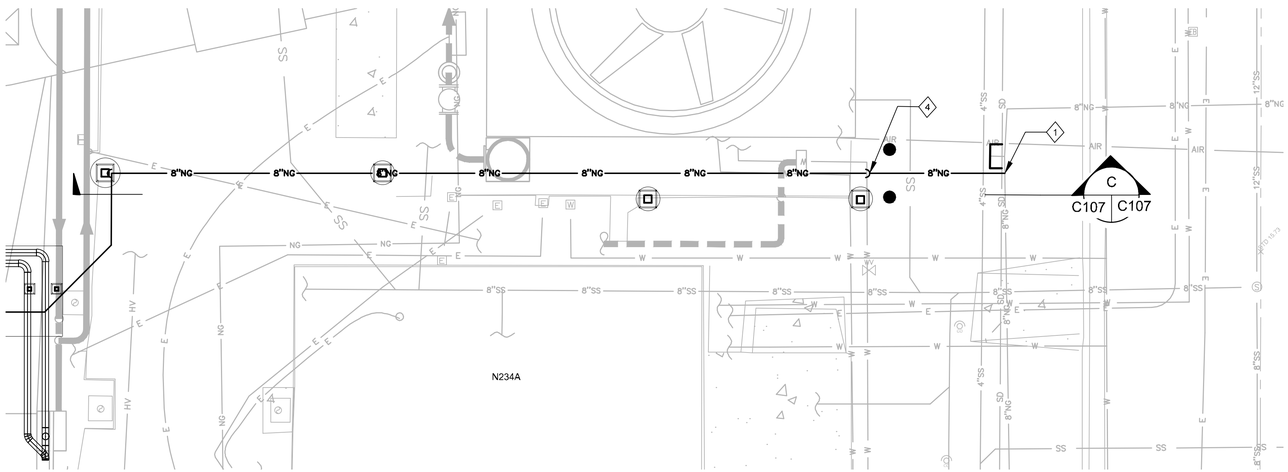

KEY MAP N NO SCALE

KEY NOTES

1. GAS LINE POINT OF CONNECTION TO EXISTING 8" NATURAL GAS MAIN SEE DETAIL 3 ON SHEET C505.
2. 8" DIAMETER NATURAL GAS LINE.
3. RAISE PIPE INVERT 14' ± ABOVE GROUND.
4. MECHANICAL POINT OF CONNECTION. SEE SHEET M101.
5. NATURAL GAS LINE (ABOVE GROUND). TO BE PAINTED PER SPEC SECTION 09 90 00. LABELED "NG" PAINT CONFIGURATION COLORS ARE YELLOW BACKGROUND AND BLACK TEXT.
6. SEE PIPE SUPPORT SCHEDULE ON SHEET M603.

ZONE	LETTER	DESCRIPTION	DRAWN	DATE	APPRVD

REVISIONS

DRAWN A.FERNANDEZ	DATE	
DESIGNED E.FRAMPTON	DATE	
CHECKED R.CROENI	DATE	
A&E PM G.HITE	DATE	
NASA PM W.LEE	DATE	
REQUESTER G.RAICHE	DATE	
R&QA	DATE	
SAFETY	DATE	
SUPERVISOR S.FRANKEL	DATE	

REGISTERED PROFESSIONAL ENGINEER ERIC CHRISTOPHER FRAMPTON No. 64567 CIVIL STATE OF CALIFORNIA

Ames Research Center
Moffett Field, California

REPLACE ARC JET COMPLEX SVS BOILER
CIVIL
NATURAL GAS LINE LAYOUT

SIZE	CAGE CODE		REV
D	25307	A 231-1300-C107	
SCALE AS NOTED	INDEX	SHEET OF	

FILE NAME: 231-C107.DWG 1/28/2013

DWG: W:\2011 Projects\0511100\Dwg\Civil\231-C107.dwg Version: 18.1s (LMS Tech) User: KatieA
DATE: Jan 25, 2013 - 9:04:42 am

DWG NO.	SH.	REV
A231-1300-C108		

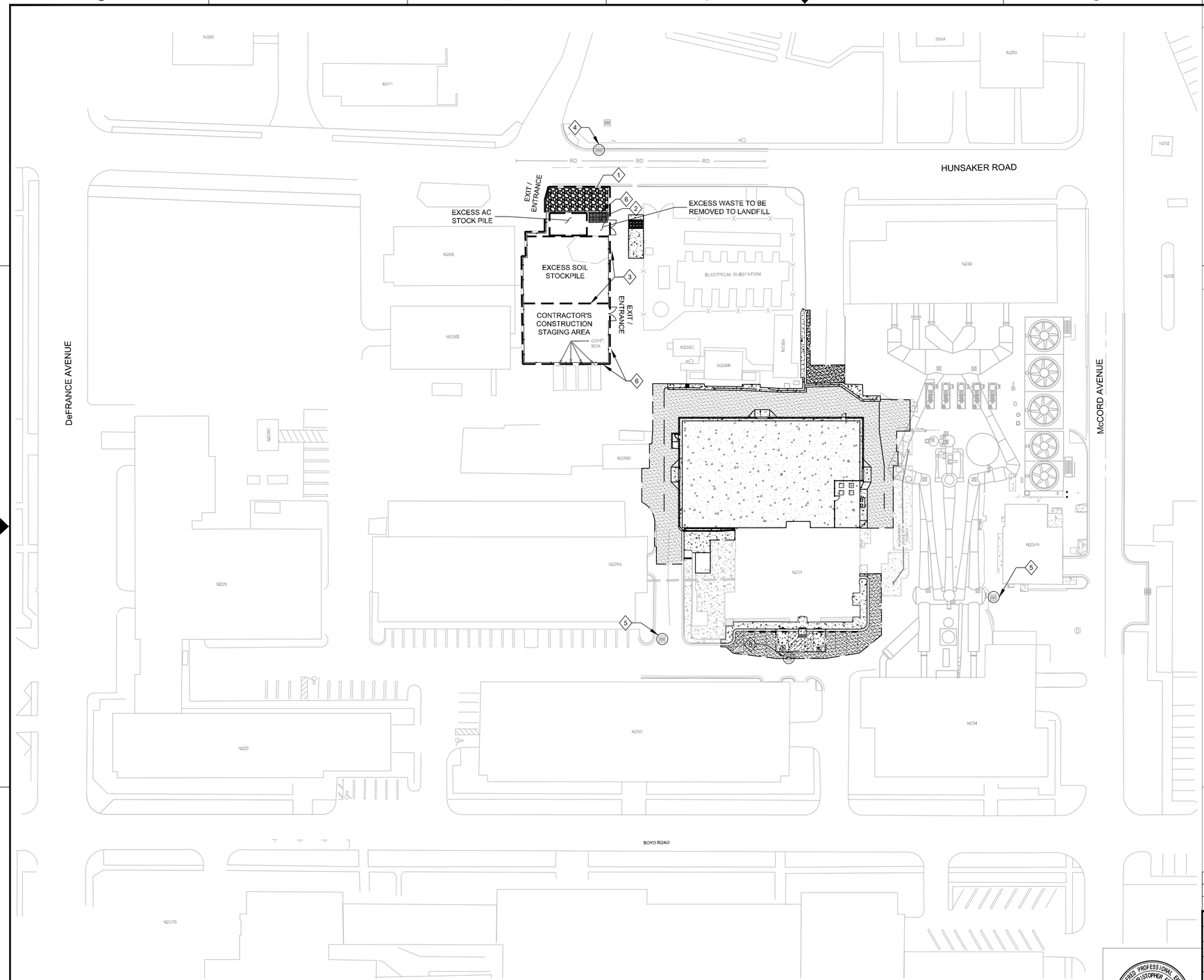

1 STORM WATER POLLUTION PREVENTION AND BEST MANAGEMENT PRACTICES PLAN
C108 C108 SCALE: 1"= 40'

N

SCALE: 1"=40' 40 0 40 80

SHEET NOTES

SEQUENCE OF BMP CONSTRUCTION

PHASE I
1. PROVIDE STABILIZED CONSTRUCTION ENTRANCES.
2. PREPARE TEMPORARY PARKING AND STORAGE AREA.
3. CLEAR AND GRUB THE SITE.
4. PROVIDE INLET PROTECTION AROUND ALL STORM SEWER STRUCTURES.
5. BEGIN DEMOLITION AND GRADING THE SITE.

PHASE II
1. CONSTRUCT THE SILT FENCES OR FIBER TUBES ON THE SITE.
2. PROVIDE UTILITIES, UNDERDRAINS, STORM SEWERS, CURBS AND GUTTERS.
3. PREPARE SITE FOR PAVING.
4. PAVE SITE.
5. PROVIDE INLET PROTECTION DEVICES.
6. COMPLETE GRADING AND INSTALL HYDROSEEDING ON EXPOSED AREAS.
7. REMOVE ALL TEMPORARY EROSION AND SEDIMENT CONTROL DEVICES (ONLY IF SITE IS STABILIZED).

KEY NOTES

1. GRAVEL ENTRANCE / EXIT AS SHOWN ON DETAIL 4 ON SHEET C504.
2. CONCRETE WASHOUT AS SHOWN ON DETAIL 5 ON SHEET C504.
3. FIBER FLOCCULENT TUBE AS SHOWN ON DETAIL 6 ON SHEET C504.
4. CURB INLET GRAVEL SEDIMENT FILTER AS SHOWN ON DETAIL 3 ON SHEET C504.
5. DROP INLET GRAVEL SEDIMENT FILTER AS SHOWN ON DETAIL 2 ON SHEET C504.
6. TEMPORARY CHAIN LINK FENCE.

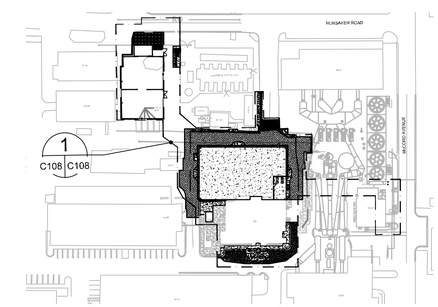

KEY PLAN
N.T.S.

N

ZONE	LETTER	DESCRIPTION	DRAWN	DATE	APPRVD

REVISIONS

DRAWN A.FERNANDEZ	DATE
DESIGNED E.FRAMPTON	DATE
CHECKED R.CROENI	DATE
A&E PM G.HITE	DATE
NASA PM W.LEE	DATE
REQUESTER G.RAICHE	DATE
R&QA	DATE
SAFETY	DATE
SUPERVISOR S.FRANKEL	DATE

REGISTERED PROFESSIONAL ENGINEER ERIC CHRISTOPHER FRAMPTON No. 64567 CIVIL STATE OF CALIFORNIA

Ames Research Center
Moffett Field, California

REPLACE ARC JET COMPLEX SVS BOILER
CIVIL
STORM WATER POLLUTION PREVENTION AND BEST MANAGEMENT PRACTICES PLAN

SIZE	CAGE CODE		REV
D	25307	231-1300-C108	
SCALE 1"=40'		INDEX	SHEET OF

FILE NAME: 231-C108.DWG 1/28/2013

DWG: W:\2011 Projects\0511100\Dwg\Civil\231-C108.dwg Version: 18.1s (LMS Tech) User: KatieA
DATE: Jan 25, 2013 - 9:04:57 am

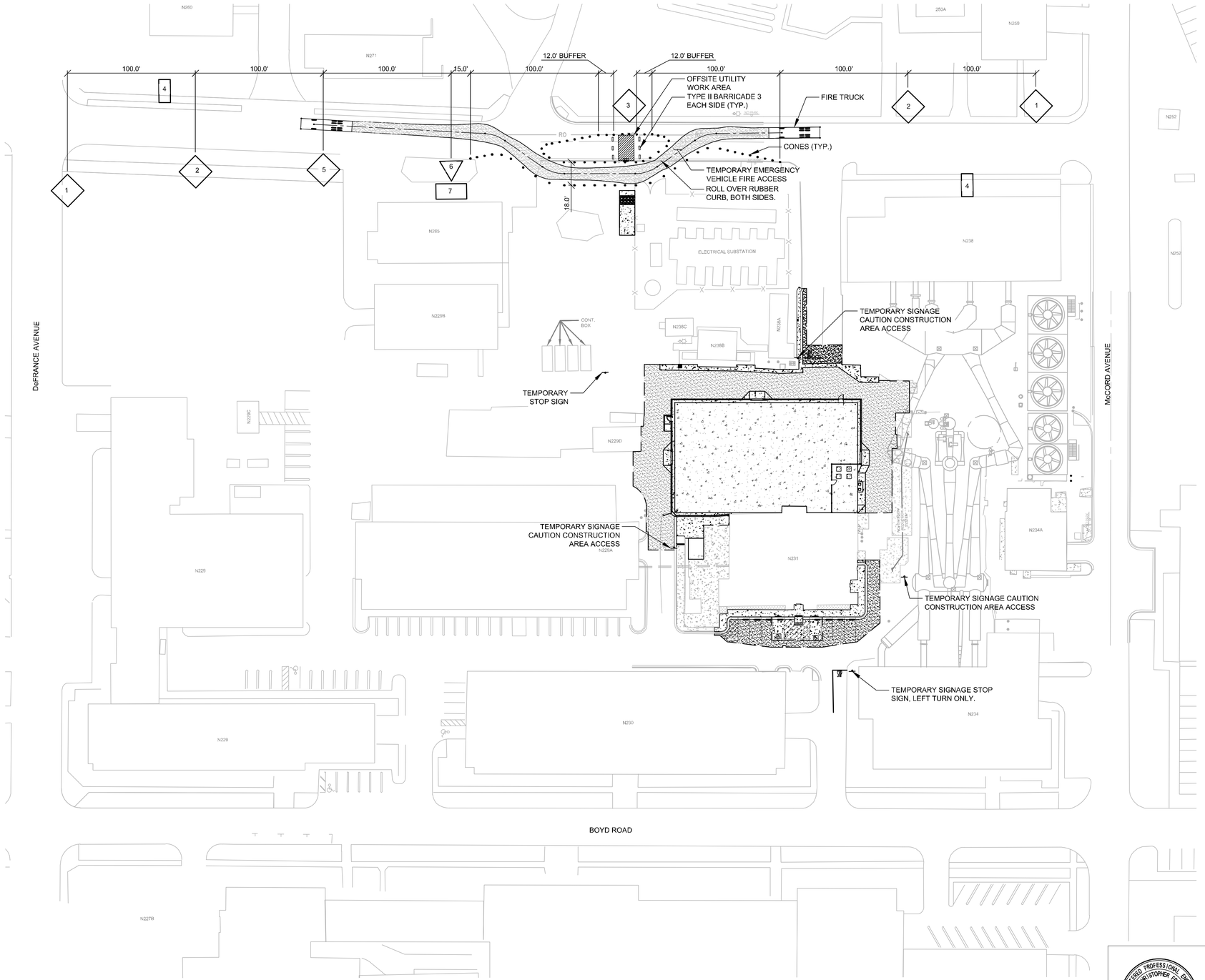

1 C109 | C109 TEMPORARY TRAFFIC CONTROL PLAN
SCALE: 1"= 40'

N

1"=40' 40 0 40 80

SIGN TABLE

SIGN NO.	PANEL SIZE	POST SIZE	QTY.	SIGN MESSAGE
1	W20-1	0'-3.5"X0'-3.5"X12'-0"	2	ROAD WORK AHEAD
2	W20-4	0'-3.5"X0'-3.5"X12'-0"	2	ONE LANE ROAD AHEAD
3	W1-4	0'-3.5"X0'-3.5"X12'-0"	1	TURN AND CURVE
4	G20-2	0'-3.5"X0'-3.5"X11'-0"	2	END ROAD WORK
5	W3-2	0'-3.5"X0'-3.5"X12'-0"	1	YIELD AHEAD
6	R1-2	0'-3.5"X0'-3.5"X12'-0"	1	YIELD
7	R1-2a		1	TO ONCOMING TRAFFIC
8	TYPE II BARRICADE	STANDARD TILTING A-FRAME	1	

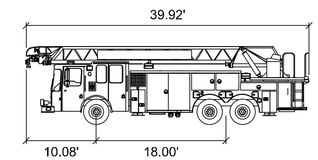

Smeal Aerial RM 100ft

		feet
Width	:	8.33
Track	:	7.92
Lock to Lock Time	:	6.0
Steering Angle	:	45.0

FIRE TRUCK PROFILE

ZONE	LETTER	DESCRIPTION	DRAWN	DATE	APPRVD

REVISIONS

DRAWN A.FERNANDEZ	DATE
DESIGNED E.FRAMPTON	DATE
CHECKED R.CROENI	DATE
A&E PM G.HITE	DATE
NASA PM W.LEE	DATE
REQUESTER G.RAICHE	DATE
R&QA	DATE
SAFETY	DATE
SUPERVISOR S.FRANKEL	DATE

REGISTERED PROFESSIONAL ENGINEER ERIC CHRISTOPHER FRAMPTON No. 64567 CIVIL STATE OF CALIFORNIA

Ames Research Center
Moffett Field, California

REPLACE ARC JET COMPLEX SVS BOILER
CIVIL

TEMPORARY TRAFFIC CONTROL PLAN

SIZE	CAGE CODE	
D	25307	A 231-1300-C109 REV
SCALE 1"=40'	INDEX	SHEET OF

FILE NAME: 231-C109.DWG 1/28/2013

DWG: W:\2011 Projects\0511100\Dwg\Civil\231-C109.dwg Version: 18.1s (LMS Tech) User: KatieA
DATE: Jan 25, 2013 - 9:05:09 am

DWG NO.	SH.	REV
A231-1300-C301		

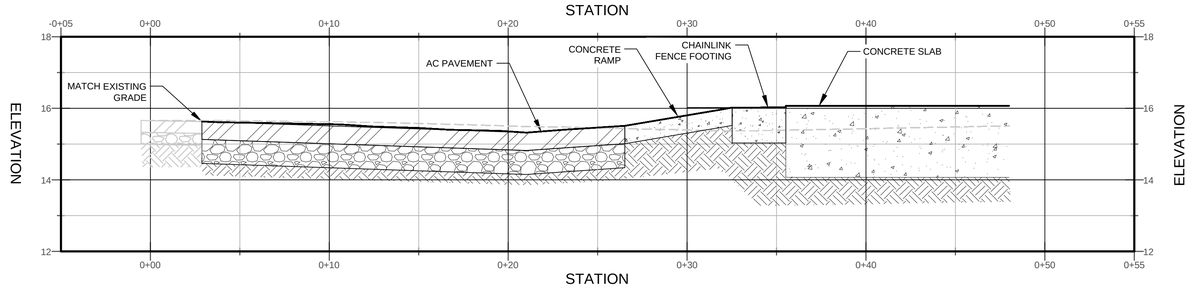

A C103 C301 SECTION A
HORIZONTAL SCALE: 1"= 4'
VERTICAL SCALE: 1"=2'

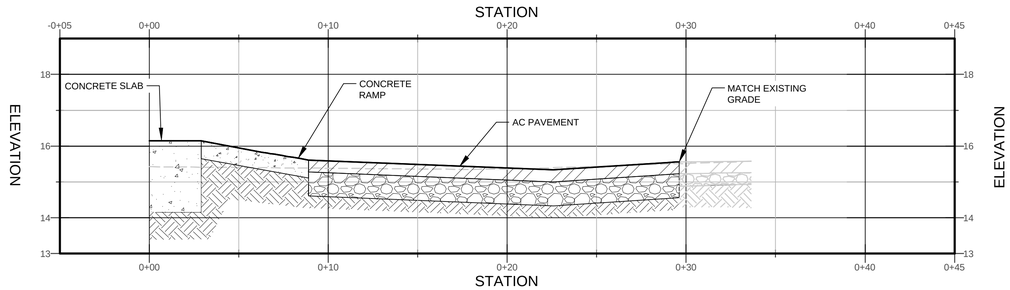

B C103 C301 SECTION B
HORIZONTAL SCALE: 1"= 4'
VERTICAL SCALE: 1"=2'

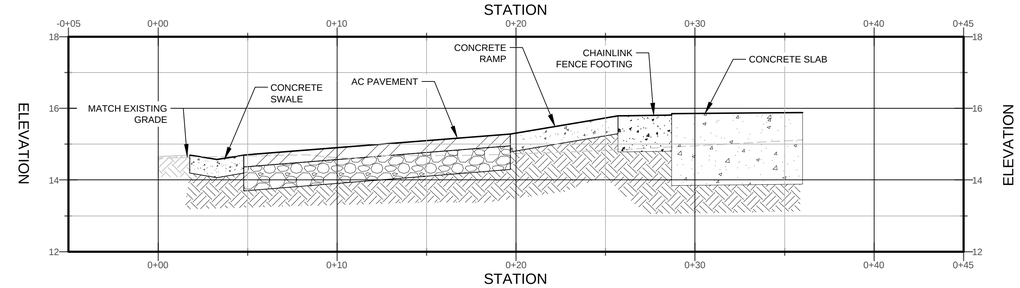

C C103 C301 SECTION C
HORIZONTAL SCALE: 1"= 4'
VERTICAL SCALE: 1"=2'

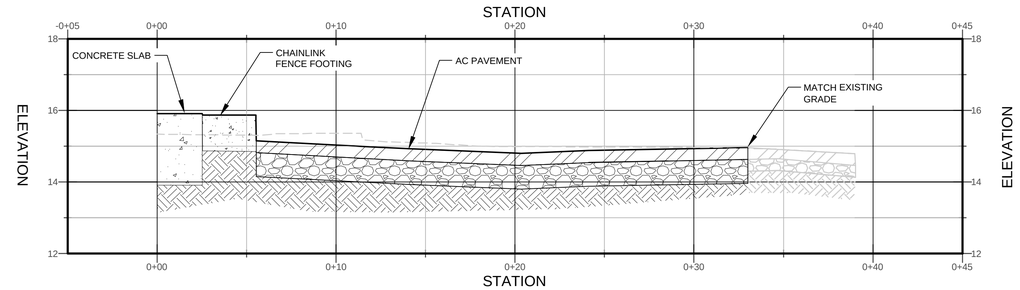

D C103 C301 SECTION D
HORIZONTAL SCALE: 1"= 4'
VERTICAL SCALE: 1"=2'

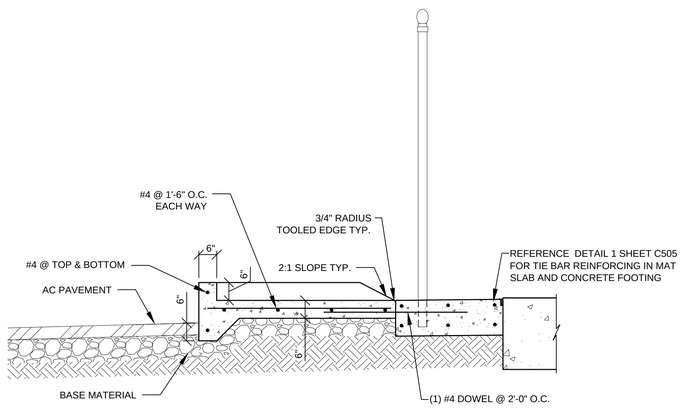

E C103 C301 SECTION E
1" = 2'

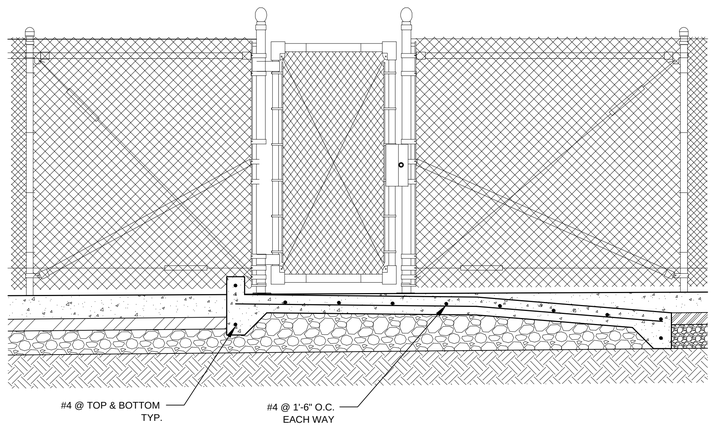

F C103 C301 SECTION F
1" = 2'

SHEET NOTES

1. SEE DETAIL 2 ON SHEET C505 FOR RAMP REINFORCEMENT.

REGISTERED PROFESSIONAL ENGINEER ERIC CHRISTOPHER FRAMPTON No. 64567 CIVIL STATE OF CALIFORNIA

ZONE	LETTER	DESCRIPTION	DRAWN	DATE	APPRVD

REVISIONS

DRAWN A.FERNANDEZ	DATE	
DESIGNED E.FRAMPTON	DATE	
CHECKED R.CROENI	DATE	
A&E PM G.HITE	DATE	
NASA PM W.LEE	DATE	
REQUESTER G.RAICHE	DATE	
R&QA	DATE	
SAFETY	DATE	
SUPERVISOR S.FRANKEL	DATE	

Ames Research Center
Moffett Field, California

REPLACE ARC JET COMPLEX SVS BOILER
CIVIL
SECTIONS

SIZE	CAGE CODE		REV
D	25307	231-1300-C301	
SCALE	AS NOTED	INDEX	SHEET OF

FILE NAME: 231-C301.DWG 1/28/2013

DWG: W:\2011 Projects\05\11100\Dwg\Civil\231-C301.dwg Version: 18.1s (LMS Tech) User: KatieA
DATE: Jan 25, 2013 - 9:05:35 am

DWG NO.	SH.	REV
A231-1300-C302		

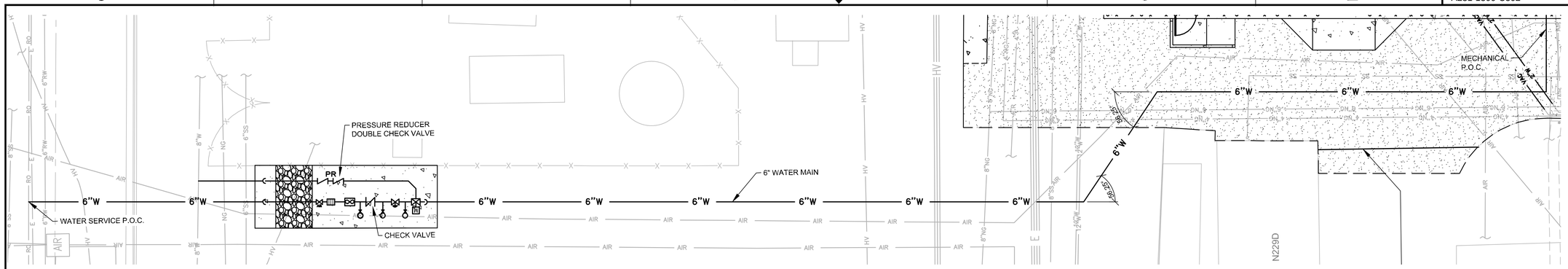

1 C302 C302 WATER MAIN PLAN VIEW
SCALE: 1"= 10'

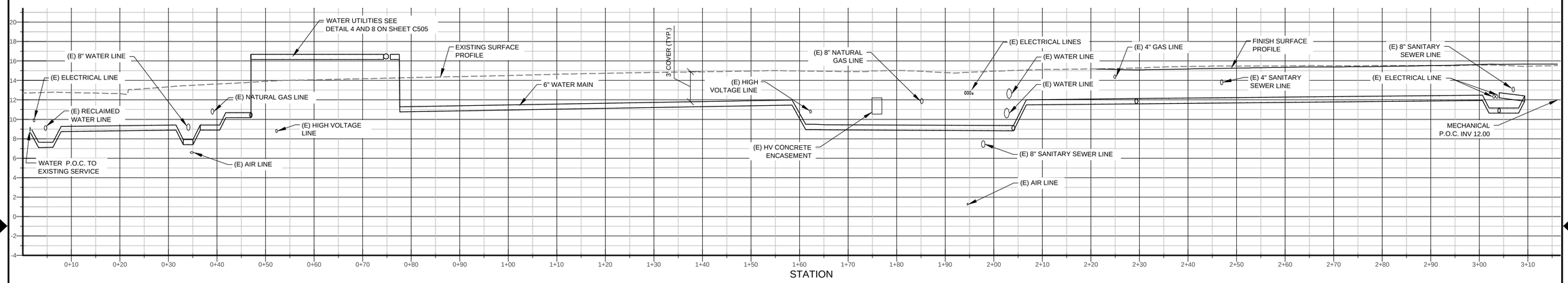

1 C302 C302 WATER MAIN PROFILE VIEW
HORIZONTAL SCALE: 1"= 10'
VERTICAL SCALE: 1"=5'

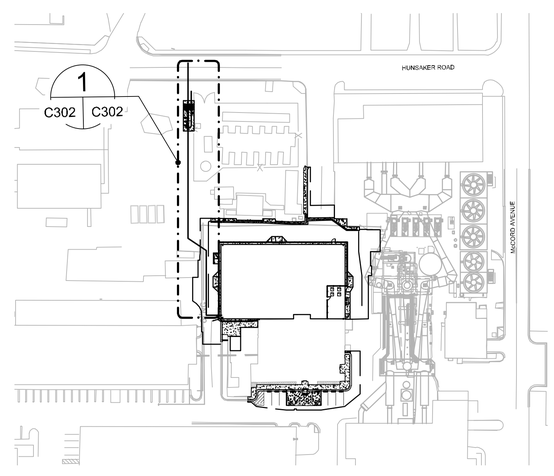

KEY PLAN
N.T.S.

ZONE	LETTER	DESCRIPTION	DRAWN	DATE	APPRVD

REVISIONS

DRAWN A.FERNANDEZ	DATE
DESIGNED E.FRAMPTON	DATE
CHECKED R.CROENI	DATE
A&E PM G.HITE	DATE
NASA PM W.LEE	DATE
REQUESTER G.RAICHE	DATE
R&QA	DATE
SAFETY	DATE
SUPERVISOR S.FRANKEL	DATE

REGISTERED PROFESSIONAL ENGINEER
ERIC CHRISTOPHER FRAMPTON
No. 64567
CIVIL
STATE OF CALIFORNIA

Ames Research Center
Moffett Field, California

REPLACE ARC JET COMPLEX SVS BOILER
CIVIL

WATER AND SANITARY SEWER PLAN AND PROFILE VIEW

SIZE	CAGE CODE		REV
D	25307	231-1300-C302	
SCALE	AS NOTED	INDEX	SHEET OF

FILE NAME: 231-C302.DWG 1/28/2013

DWG: W:\2011 Projects\05\1100\Dwg\Civil\231-C302.dwg Version: 18.1s (LMS Tech) User: KatieA
DATE: Jan 25, 2013 - 9:06:03 am

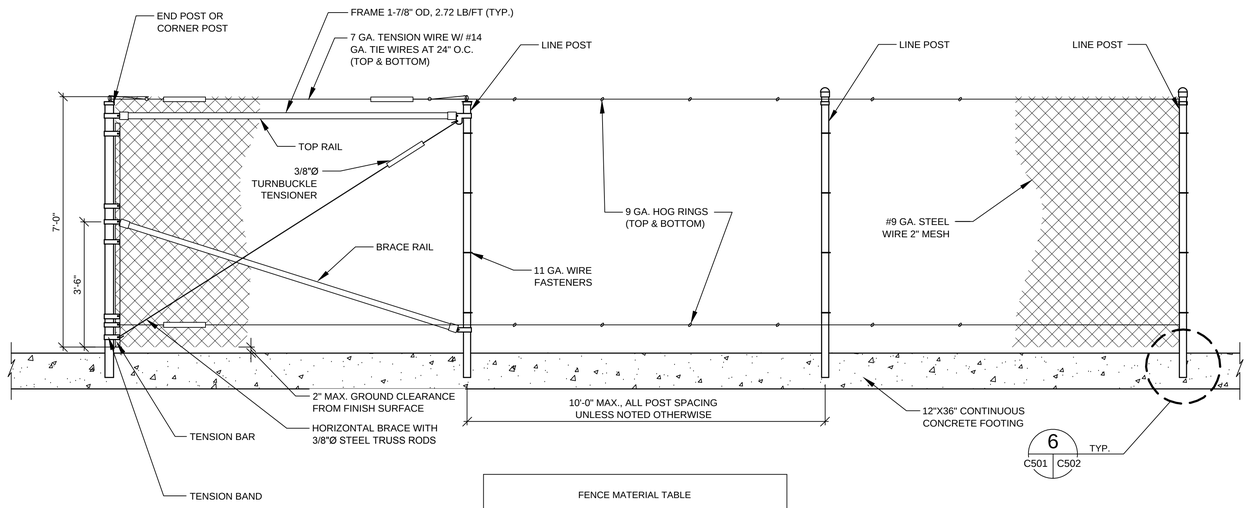

FENCE MATERIAL TABLE				
GATE MATERIAL DESCRIPTION	PIPE ID INCHES	PIPE OD INCHES	WALL THICKNESS INCHES	PIPE WEIGHT LB/FT
LINE POSTS	2.07	2.38	0.154	3.66
END & CORNER LINE POSTS	2.47	2.88	0.203	5.80

NOTE:
SEE DETAIL 4 ON SHEET C502 FOR FASTENING DETAILS.

3 FENCE WITH TOP TENSION WIRE
C001,C102,C505 | C501 1"=2'-0"

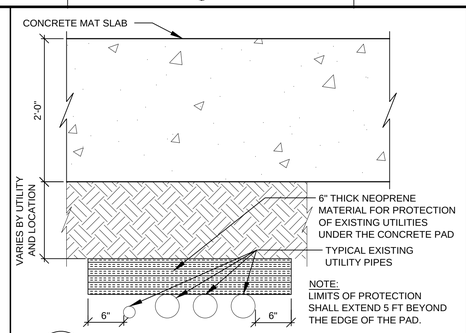

NOTE:
LIMITS OF PROTECTION SHALL EXTEND 5 FT BEYOND THE EDGE OF THE PAD.

1 (E) UTILITY PROTECTION DETAIL
C101 | C501 1"=1'-0"

NOTE:
TIE BAR REINFORCING NOT SHOWN FOR CLARITY. SEE TIE BAR REINFORCING DETAIL 1 ON SHEET C505

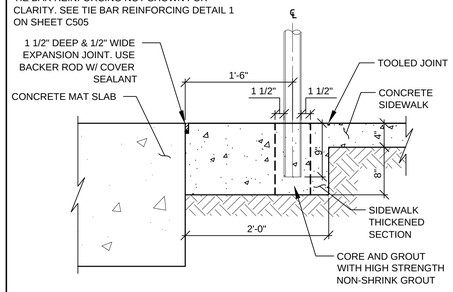

2 SIDEWALK THICKENED SECTION
C102 | C501 1"=1'-0"

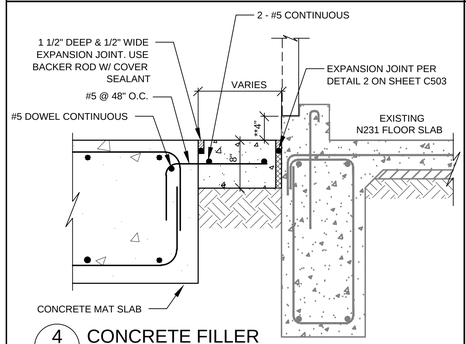

** VARIES BY LOCATION

4 CONCRETE FILLER
C102 | C501 N.T.S.

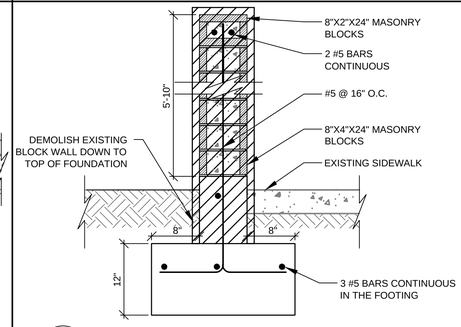

5 (E) BLOCKWALL
C101 | C501 1"=1'-0"

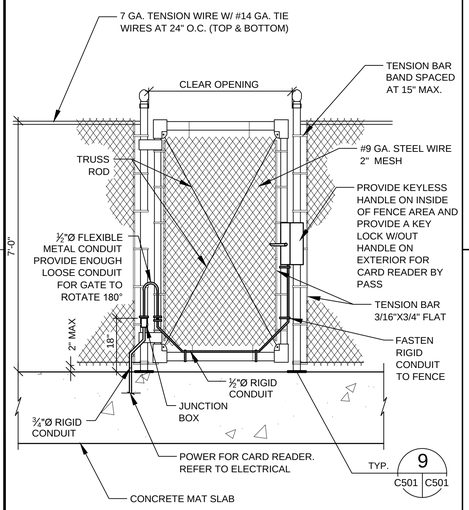

8 CARD READER ACCESS GATE
C102 | C501 N.T.S.

MODEL: ZURN (Z882)

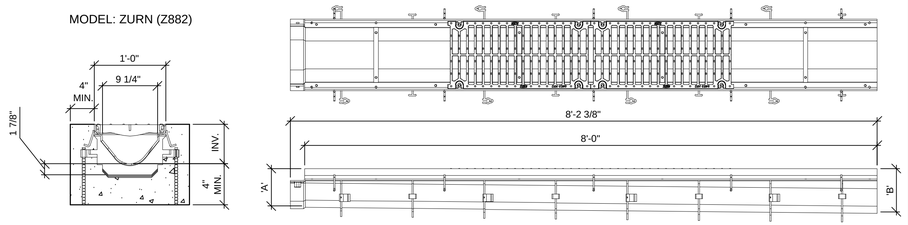

NOTE: + ACTUAL CHANNEL LENGTH IS 8'-2 3/8" TO ALLOW FOR OVERLAP.

6 TRENCH DRAIN WIDE
C103,C505 | C501 N.T.S.

MODEL: ZURN (Z886-ST)

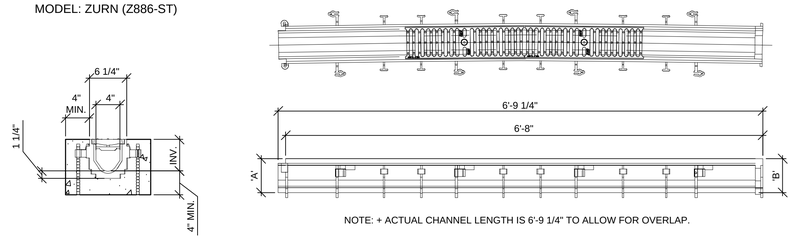

NOTE: + ACTUAL CHANNEL LENGTH IS 6'-9 1/4" TO ALLOW FOR OVERLAP.

7 TRENCH DRAIN
C103 | C501 N.T.S.

NOTE:
BASE PLATES SHALL BE USED IN FENCE POSTS LOCATED WITHIN THE CONCRETE MAT SLAB..

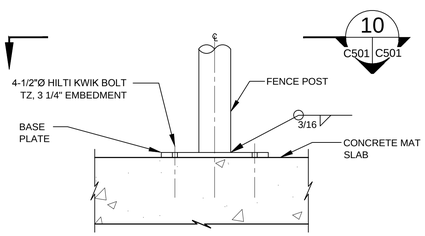

9 TYPICAL FENCE POST BASE PLATE
C102,C501,C503 | C501 3"=1'-0"

NOTE:
BASE PLATES SHALL BE USED IN FENCE POSTS LOCATED WITHIN THE CONCRETE MAT SLAB.

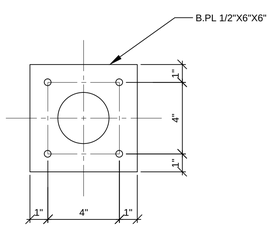

10 TYPICAL FENCE POST BASE PLATE
C501 | C501 3"=1'-0"

ZONE	LETTER	DESCRIPTION	DRAWN	DATE	APPRVD

REVISIONS

DRAWN A.FERNANDEZ	DATE	
DESIGNED E.FRAMPTON	DATE	
CHECKED R.CROENI	DATE	
A&E PM G.HITE	DATE	
NASA PM W.LEE	DATE	
REQUESTER G.RAICHE	DATE	
R&QA	DATE	
SAFETY	DATE	
SUPERVISOR S.FRANKEL	DATE	

REGISTERED PROFESSIONAL ENGINEER ERIC CHRISTOPHER FRAMPTON No. 64567 CIVIL STATE OF CALIFORNIA

Ames Research Center
Moffett Field, California

REPLACE ARC JET COMPLEX SVS BOILER
CIVIL
DETAILS

SIZE	CAGE CODE		REV
D	25307	A 231-1300-C501	
SCALE AS NOTED		INDEX	SHEET OF

FILE NAME: 231-C501.DWG 1/28/2013

DWG: W:\2011 Projects\05\11100\Dwg\Civil\231-C501.dwg Version: 18.1s (LMS Tech) User: KatieA
DATE: Jan 25, 2013 - 9:06:12 am

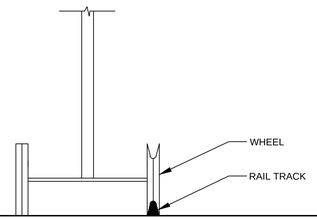

1 DOUBLE WHEEL CARRIER
C502 | C502 2"=1'-0"

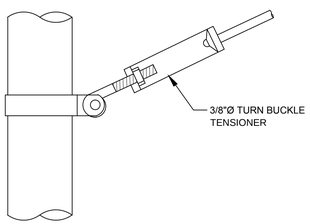

2 TRUSS ROD AND BAND
C501,C502 | C502 N.T.S.

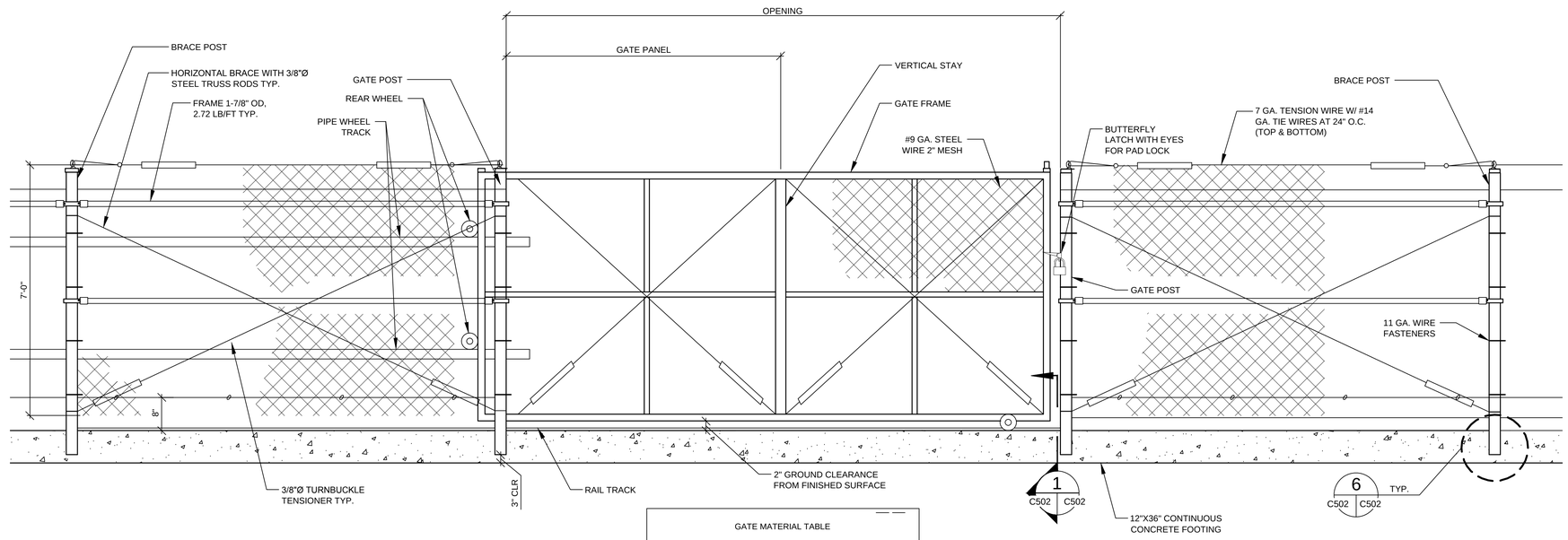

3 CHAINLINK SLIDING GATE
C001,C102 | C502 1"-2'-0"

GATE MATERIAL TABLE				
GATE MATERIAL DESCRIPTION	PIPE ID INCHES	PIPE OD INCHES	WALL THICKNESS INCHES	PIPE WEIGHT LB/FT
GATE POST	2.47	2.88	0.203	5.80
GATE FRAME	1.61	1.90	0.145	2.72

NOTE:
SEE DETAIL 4 ON SHEET C502 FOR FASTENING DETAILS.

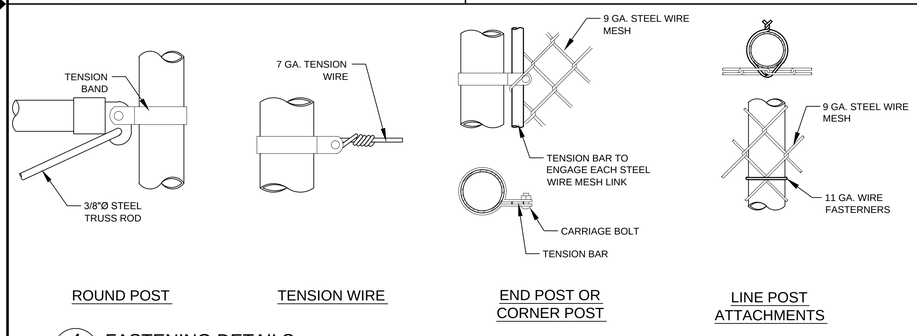

4 FASTENING DETAILS
C501,C502 | C502 N.T.S.

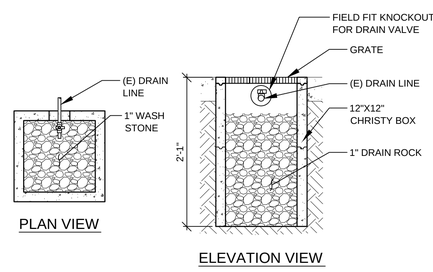

5 DRY WELL
C102 | C502 1"=1'-0"

NOTE:
ALL SCARRING TO FACE OF CURB SHALL BE REPAIRED WITH CONCRETE GROUT WITH BRUSH FINISH.

TIE BAR REINFORCING NOT SHOWN FOR CLARITY. SEE TIE BAR REINFORCING DETAIL 1 ON SHEET C505.

* REFERENCE GRADING PLAN (C103)

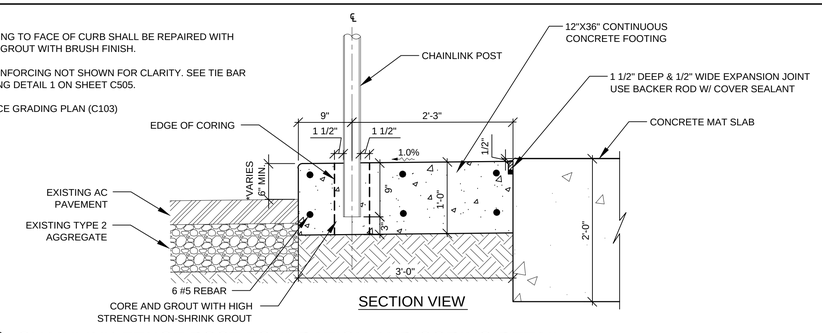

6 CHAINLINK FENCE POST FOUNDATION AND CORING DETAIL
C102, C502 | C502 1"=1'-0"

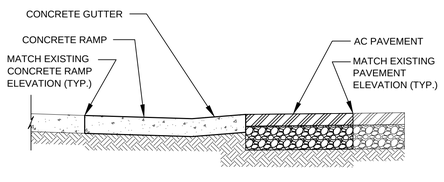

7 RAMP TRANSITION TO MATCH EXISTING
C103 | C502 1"=2'-0"

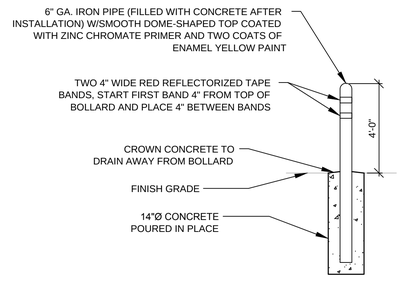

8 CONCRETE FILLED BOLLARD
C106 | C502 N.T.S.

REGISTERED PROFESSIONAL ENGINEER ERIC CHRISTOPHER FRAMPTON No. 64567 CIVIL STATE OF CALIFORNIA

ZONE	LETTER	DESCRIPTION	DRAWN	DATE	APPRVD

REVISIONS

DRAWN A.FERNANDEZ	DATE
DESIGNED E.FRAMPTON	DATE
CHECKED R.CROENI	DATE
A&E PM G.HITE	DATE
NASA PM W.LEE	DATE
REQUESTER G.RAICHE	DATE
R&QA	DATE
SAFETY	DATE
SUPERVISOR S.FRANKEL	DATE

Ames Research Center
Moffett Field, California

REPLACE ARC JET COMPLEX SVS BOILER
CIVIL
DETAILS

SIZE	CAGE CODE	REV
D	25307	A 231-1300-C502
SCALE AS NOTED	INDEX	SHEET OF

FILE NAME: 231-C502.DWG 1/28/2013

DWG: \\V:\2011 Projects\051100\Dwg\Civil\231-C502.dwg Version: 18.1s (LMS Tech) User: KatieA
DATE: Jan 25, 2013 - 9:06:45 am

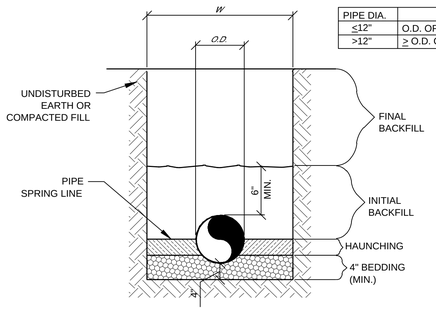

PIPE DIA.	W
≤12"	O.D. OF PIPE + (12" TO 18")
>12"	≥ O.D. OF PIPE + 18"

WATER LINE

N.T.S.

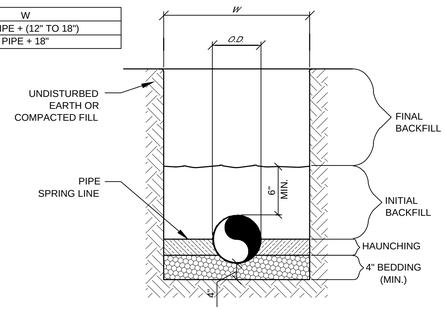

STORM AND SANITARY SEWER

N.T.S.

NOTES:

1. BEDDING SHALL BE CLASS I-A WORKED BY HAND. IF GROUNDWATER IS ANTICIPATED, THEN BEDDING SHALL BE CLASS I-B COMPACTED TO 85% STANDARD PROCTOR.
2. HAUNCHING SHALL BE WORKED AROUND THE PIPE BY HAND TO ELIMINATE VOIDS AND SHALL BE CLASS I-A OR CLASS I-B OR CLASS II COMPACTED TO 85% PROCTOR.
3. INITIAL BACKFILL SHALL BE CLASS I-A WORKED BY HAND, OR CLASS I-B OR CLASS II COMPACTED TO 85% STANDARD PROCTOR.
4. INITIAL BACKFILL NOT UNDER PAVED AREAS CAN BE CLASS III COMPACTED TO 90% STANDARD PROCTOR.
5. FINAL BACKFILL SHALL BE PER GEOTECHNICAL REPORT RECOMMENDATIONS.
6. FINAL BACKFILL NOT UNDER PAVED AREAS CAN BE CLASS IV-A COMPACTED TO 95% STANDARD PROCTOR.
7. ALL MATERIALS ARE CLASSIFIED IN ACCORDANCE WITH ASTM D 2321-89.
8. ALL MATERIALS SHALL BE INSTALLED IN MAXIMUM 8" LOOSE LIFTS IN ACCORDANCE WITH ASTM D 698. CLASS III AND IV-A MATERIALS SHALL BE COMPACTED NEAR OPTIMUM MOISTURE CONTENT.
9. FILL SALVAGED FROM EXCAVATION SHALL BE FREE OF DEBRIS, ORGANICS AND ROCKS LARGER THAN 3".
10. ALL TRENCH EXCAVATIONS SHALL BE SLOPED, SHORED, SHEETED, BRACED, OR OTHERWISE SUPPORTED IN COMPLIANCE WITH OSHA REGULATIONS AND LOCAL ORDINANCES. (SEE SPECIFICATIONS)

4 PIPE BEDDING AND TRENCH WIDTH

C001 | C503 N.T.S.

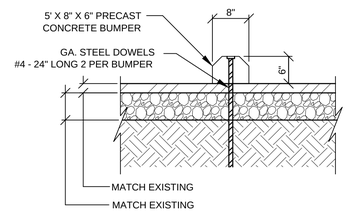

BID OPTION 6

1 CONCRETE WHEEL STOP

C105 | C503 N.T.S.

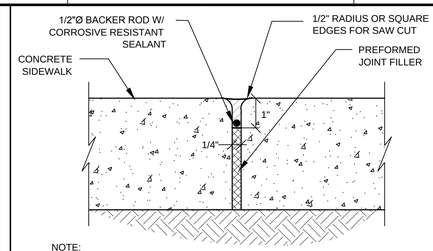

NOTE:
1. EXPANSION JOINTS SHALL BE AT 45 FT. O.C. MAX.
2. EXPANSION JOINTS SHALL BE LOCATED WHERE SIDEWALK ABUTS CONCRETE DRIVEWAYS, CURB OR OTHER ADJACENT STRUCTURES.
3. WEAKENED PLANE JOINTS SHALL BE 12' O.C.

2 EXPANSION JOINT

C501 | C503 N.T.S.

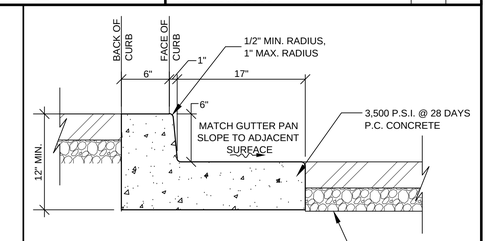

NOTE:
GUTTER SLOPE TO MATCH ADJACENT PAVEMENT, TRAVERSE AND LONGITUDINAL.

3 CONCRETE CURB AND GUTTER

C102,C105 | C503 N.T.S.

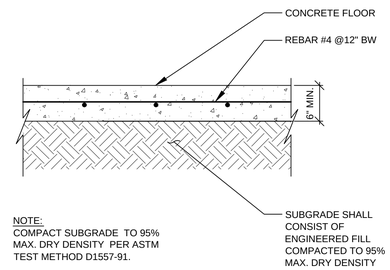

NOTE:
COMPACT SUBGRADE TO 95% MAX. DRY DENSITY PER ASTM TEST METHOD D1557-91.

5 CONCRETE PAVEMENT SECTION

C105 | C503 1"=1'-0"

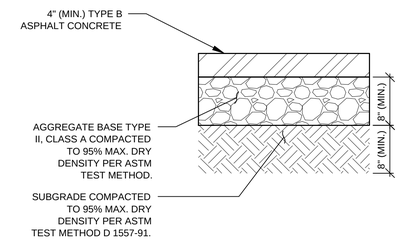

6 ASPHALT PAVEMENT SECTION

C001,C102 C105,C503 | C503 1"=1'-0"

NOTE:
SEE DETAIL 9 SHEET 504 FOR SIGN BASE DETAIL.

THIS SIGN TYPICAL AT ALL ACCESSIBLE PARKING SPACES

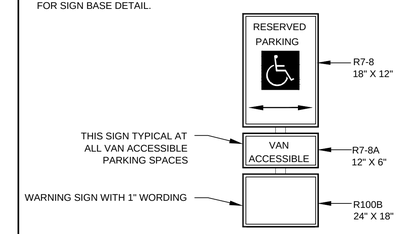

7 ACCESSIBLE PARKING SIGN

C105 | C503 N.T.S.

BID OPTION 6

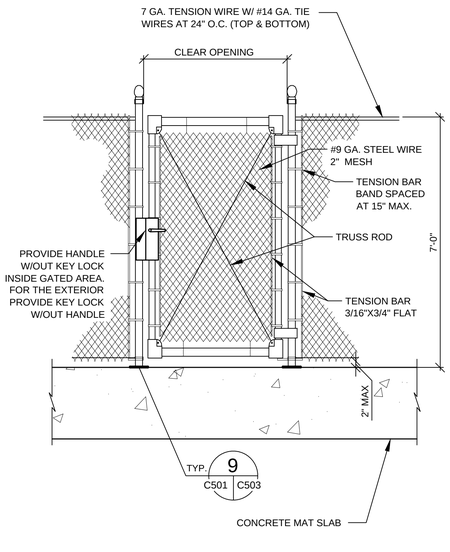

12 MAN GATE INTERIOR ELEVATION

C102,C301 | C503 N.T.S.

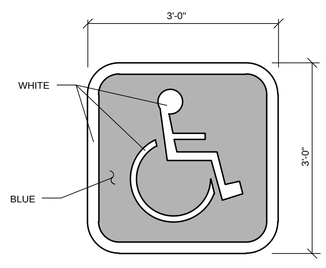

BID OPTION 6

8 ACCESSIBLE PAVEMENT STRIPING

C105 | C503 N.T.S.

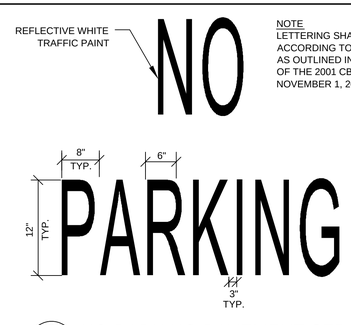

NOTE
LETTERING SHALL BE APPLIED ACCORDING TO REQUIREMENTS AS OUTLINED IN SECTION 1129B OF THE 2001 CBC EFFECTIVE NOVEMBER 1, 2002

9 NO PARKING PAVEMENT STRIPING

C105 | C503 N.T.S.

BID OPTION 6

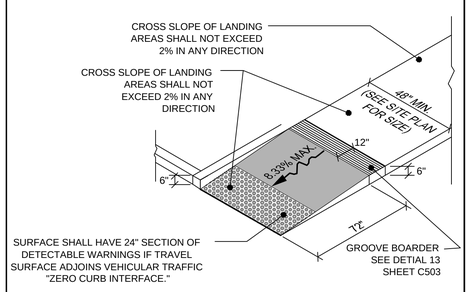

10 ACCESSIBLE CONCRETE RAMP

C102 | C503 N.T.S.

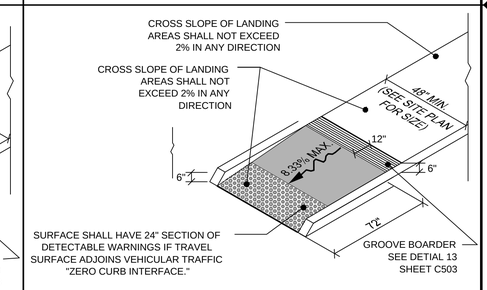

11 ACCESSIBLE CONCRETE RAMP

C105 | C503 N.T.S.

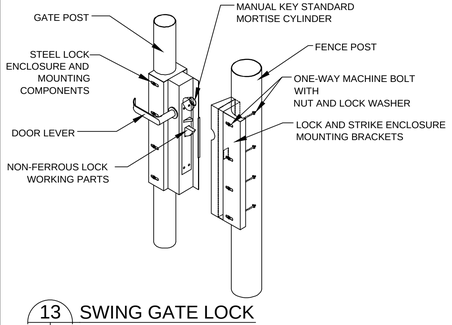

13 SWING GATE LOCK

C503 | C503 N.T.S.

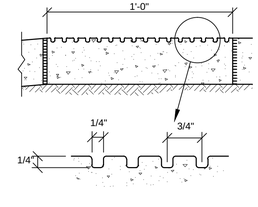

14 GROOVE BORDER DETAIL

C503 | C503 N.T.S.

ZONE	LETTER	DESCRIPTION	DRAWN	DATE	APPRVD

REVISIONS

DRAWN A.FERNANDEZ	DATE
DESIGNED E.FRAMPTON	DATE
CHECKED R.CROENI	DATE
A&E PM G.HITE	DATE
NASA PM W.LEE	DATE
REQUESTER G.RAICHE	DATE
R&QA	DATE
SAFETY	DATE
SUPERVISOR S.FRANKEL	DATE

REGISTERED PROFESSIONAL ENGINEER ERIC CHRISTOPHER FRAMPTON No. 64567 CIVIL STATE OF CALIFORNIA

Ames Research Center
Moffett Field, California

REPLACE ARC JET COMPLEX SVS BOILER
CIVIL
DETAILS

SIZE	CAGE CODE	REV
D	25307	A
SCALE AS NOTED	INDEX	SHEET OF

231-1300-C503

FILE NAME: 231-C503.DWG 1/28/2013

DWG: W:\0211 Projects\05\11100\Dwg\Civil\231-C503.dwg Version: 18.1s (LMS Tech) User: KatieA
DATE: Jan 25, 2013 - 3:06:56 am

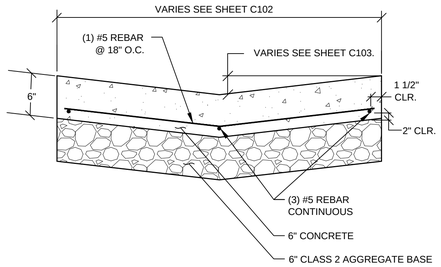

1 CONCRETE SWALE

C102 | C504 N.T.S.

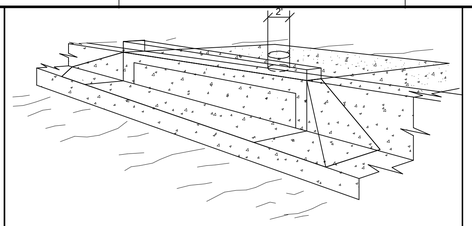

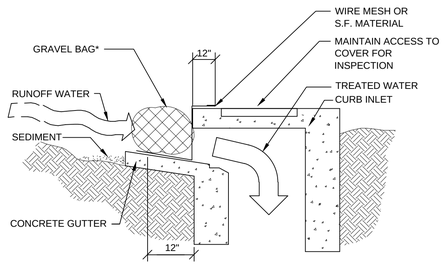

SPECIFIC APPLICATION

THIS METHOD OF INLET PROTECTION IS APPLICABLE AT CURB INLETS WHERE PONDING IN FRONT OF THE STRUCTURE IS NOT LIKELY TO CAUSE INCONVENIENCE OR DAMAGE TO ADJACENT STRUCTURES AND UNPROTECTED AREAS.

* GRAVEL BAGS SHALL BE 0.5" TO 1" STONE. CLASS 2 AGGREGATE BASE, CLEAN AND FREE FROM CLAY, ORGANIC MATTER, AND OTHER DELETERIOUS MATERIAL, OR OTHER SUITABLE OPEN GRADED NON-COHESIVE, POROUS GRAVEL.

3 CURB INLET GRAVEL SEDIMENT FILTER

C108 | C504 N.T.S.

DESIGN CRITERIA

AGGREGATE SIZE - USE 2-3 INCH WASHED STONE DIMENSION OF GRAVEL PAD

THICKNESS - 6 INCHES MINIMUM

WIDTH - 12 FT. MINIMUM OR FULL WIDTH AT ACCESS POINTS OF THE VEHICULAR ENTRANCE AND EXIT AREA, WHICHEVER IS GREATER

LENGTH - 50 FT. MINIMUM.

LOCATION - LOCATE CONSTRUCTION ENTRANCES AND EXITS TO LIMIT SEDIMENT FROM LEAVING THE SITE AND TO PROVIDE FOR MAXIMUM UTILITY BY ALL CONSTRUCTION VEHICLES. AVOID STEEP GRADES AND ENTRANCES AT CURVES IN PUBLIC ROADS. CONTRACTOR SHALL PROVIDE ADDITIONAL GRAVEL CONSTRUCTION ENTRANCES NOT INDICATED ON THE PLANS REQUIRED FOR STAGING AND/OR BORROW AREAS AND MAINTAIN AT NO ADDITIONAL EXPENSE TO THE GOVERNMENT. CONTRACTOR SHALL SUPPLEMENT AND MAINTAIN GRAVEL CONSTRUCTION ENTRANCES AT HIS EXPENSE UNTIL FINAL ACCEPTANCE.

GRAVEL ENTRANCE SHALL BE 50 FEET IN LENGTH AND 20 FEET IN WIDTH WITH 20 FOOT RADIUS AT EXISTING ROADWAY

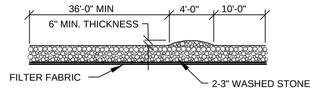

GRAVEL CONSTRUCTION ENTRANCE

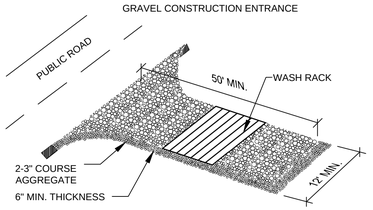

NOTE:
1. PROVIDE TIRE WASH
2. PROVIDE CORRUGATED STEEL PANELS PER CAL-TRANS STANDARDS

4 GRAVEL ENTRANCE / EXIT

C108 | C504 N.T.S.

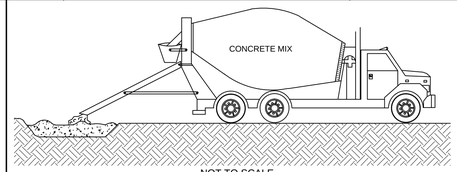

NOT TO SCALE

DESCRIPTION

PREVENT OR REDUCE THE DISCHARGE OF POLLUTANTS TO STORM WATER FROM CONCRETE WASTE BY CONDUCTING WASHOUT OFF-SITE, PERFORMING ON-SITE WASHOUT IN A DESIGNATED AREA, AND TRAINING EMPLOYEES AND SUBCONTRACTORS.

APPROACH

THE FOLLOWING STEPS WILL HELP REDUCE STORM WATER POLLUTION FROM CONCRETE WASTES:

- STORE DRY AND WET MATERIALS UNDER COVER, AWAY FROM DRAINAGE AREAS.
- AVOID MIXING EXCESS AMOUNTS OF FRESH CONCRETE OR CEMENT ON-SITE.
- PERFORM WASHOUT OF CONCRETE TRUCKS OFF SITE OR IN DESIGNATED AREAS ONLY.
- DO NOT WASH OUT CONCRETE TRUCKS INTO STORM DRAINS, OPEN DITCHES, STREETS, OR STREAMS.
- DO NOT ALLOW EXCESS CONCRETE TO BE DUMPED ON-SITE, EXCEPT IN DESIGNATED AREAS.
- FOR ON-SITE WASHOUT:
- LOCATE WASHOUT AREA AT LEAST 50' FROM STORM DRAINS, OPEN DITCHES, OR WATER BODIES. DO NOT ALLOW RUNOFF FROM THIS AREA BY CONSTRUCTING A TEMPORARY PIT OR BERMED AREA LARGE ENOUGH FOR LIQUID AND SOLID WASTE.
- WASH OUT WASTES INTO THE TEMPORARY PIT WHERE THE CONCRETE CAN SET, BE BROKEN UP, AND THEN DISPOSED OF PROPERLY.
- WHEN WASHING CONCRETE TO REMOVE FINE PARTICLES AND EXPOSE THE AGGREGATE, AVOID CREATING RUNOFF BY DRAINING THE WATER TO A BERMED OR LEVEL AREA.
- DO NOT WASH SWEEPINGS FROM EXPOSED AGGREGATE CONCRETE INTO THE STREET OR STORM DRAIN. COLLECT AND RETURN SWEEPINGS TO AGGREGATE BASE STOCK PILE, OR DISPOSE IN THE TRASH.

5 CONCRETE WASHOUT

C108 | C504 N.T.S.

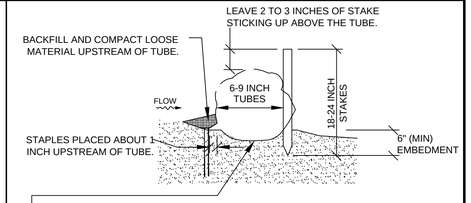

TUBES WITH FLOCCULENT MAY BE INSTALLED BEFORE OR AFTER THE INSTALLATION OF ROLLED EROSION CONTROL PRODUCTS. BEFORE INSTALLATION OF TUBE, SMOOTH AND SHAPE EARTH SURFACE AND REMOVE ALL STONES, ROOTS, OR OTHER DEBRIS GREATER THAN 2 INCHES IN DIAMETER.

IF INSTALLING TUBE ACROSS A DITCH THEN EXCAVATE A PLACEMENT TRENCH ABOUT 3 INCHES DEEP.

SECTION

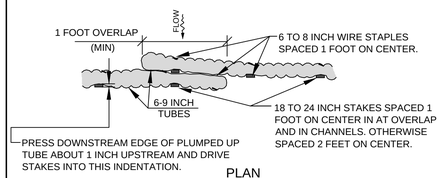

PLAN

GENERAL GUIDELINES FOR SPACING OF TUBE TRENCHES FOR SLOPE INSTALLATIONS	
SLOPE GRADIENT	TUBE INTERVAL
1H:1V	15 FEET
2H:1V	25 FEET
3H:1V	35 FEET
4H:1V	50 FEET

GENERAL GUIDELINES FOR SPACING OF TUBE TRENCHES FOR CHANNEL INSTALLATIONS	
SLOPE	TUBE INTERVAL
2%	25 FEET

REPLACE TUBES WITH FLOCCULENT PER MANUFACTURE'S SPECIFICATIONS.

6 FIBER FLOCCULENT TUBE

C108 | C504 N.T.S.

ALL SIGNS SHALL COMPLY WITH U.S. DEPARTMENT OF TRANSPORTATION, FEDERAL HIGHWAY ADMINISTRATION'S "MANUAL OF UNIFORM TRAFFIC CONTROL DEVICES", LOCAL CODES AND AS SPECIFIED. MOUNT SIGNS TO POST IN ACCORDANCE WITH MANUFACTURER'S INSTRUCTIONS.

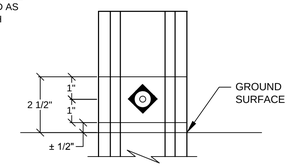

PARTIAL ELEVATION

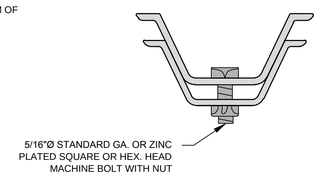

PLAN VIEW

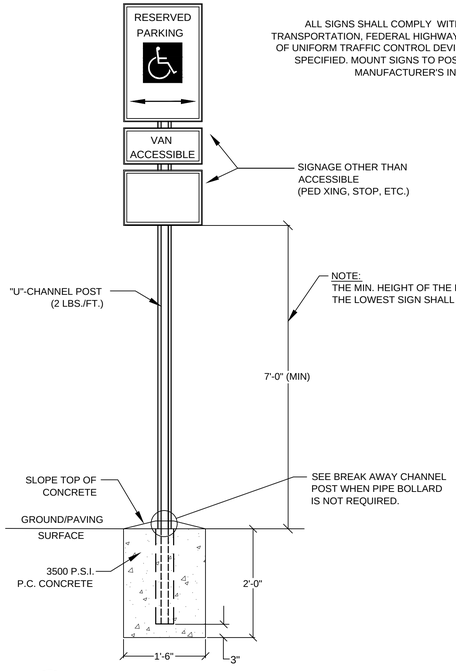

BREAK AWAY CHANNEL POST

N.T.S.

9 SIGN BASE

C001,C503 | C504 N.T.S.

BID OPTION 6

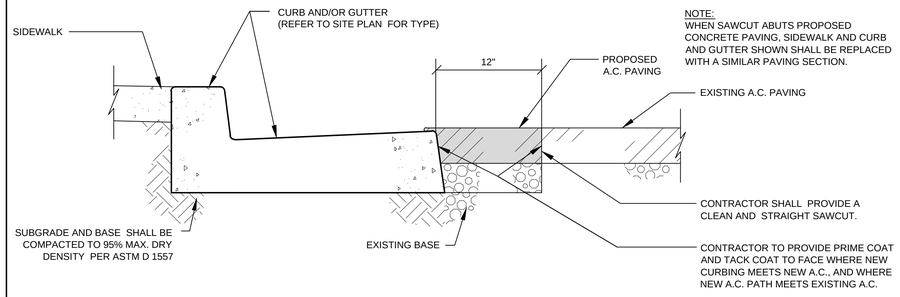

NOTE:
WHEN SAWCUT ABUTS PROPOSED CONCRETE PAVING, SIDEWALK AND CURB AND GUTTER SHOWN SHALL BE REPLACED WITH A SIMILAR PAVING SECTION.

7 SAWCUT DETAIL

C101 | C504 N.T.S.

BID OPTION 6

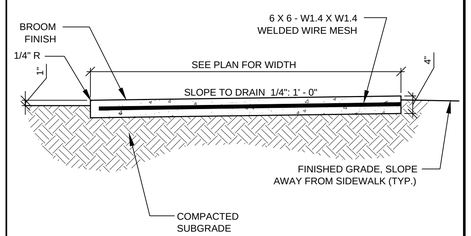

8 CONCRETE SIDEWALK

C102,C105 | C504 N.T.S.

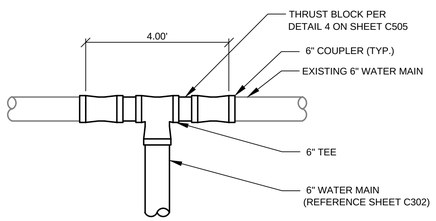

10 6" WATER MAIN CONNECTION

C106 | C504 1"=2'

REGISTERED PROFESSIONAL ENGINEER BRYCE CHRISTOPHER FRAMPTON No. 64567 CIVIL STATE OF CALIFORNIA

ZONE	LETTER	DESCRIPTION	DRAWN	DATE	APPRVD

REVISIONS

DRAWN A.FERNANDEZ	DATE
DESIGNED E.FRAMPTON	DATE
CHECKED R.CROENI	DATE
A&E PM G.HITE	DATE
NASA PM W.LEE	DATE
REQUESTER G.RAICHE	DATE
R&QA	DATE
SAFETY	DATE
SUPERVISOR S.FRANKEL	DATE

Ames Research Center
Moffett Field, California

REPLACE ARC JET COMPLEX SVS BOILER
CIVIL
DETAILS

SIZE	CAGE CODE		REV
D	25307	A 231-1300-C504	
SCALE AS NOTED		INDEX	SHEET OF

FILE NAME: 231-C504.DWG 1/28/2013

DWG: W:\2011 Projects\05111000\Dwg\Civil\231-C504.dwg Version: 18.1s (LMS Tech) User: KatieA
DATE: Jan 25, 2013 - 9:07:08 am

DWG NO.	SH.	REV
A231-1300-C505		

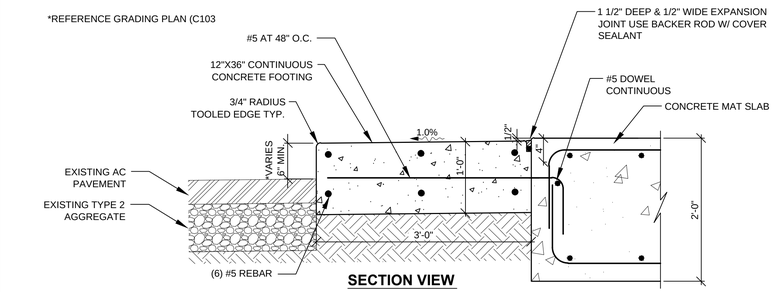

1 TIE BAR REINFORCING

C301,C501,C502 | C505 NTS

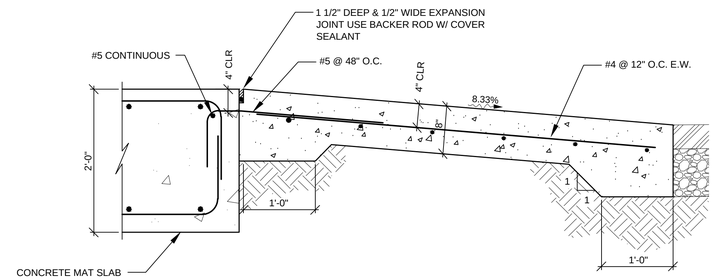

2 RAMP REINFORCING

C301 | C505 NTS

NOTE:
STEEL GAS LINE COATING PER SPEC SECTION 09 97 13.28 FOR CATHODIC PROTECTION.

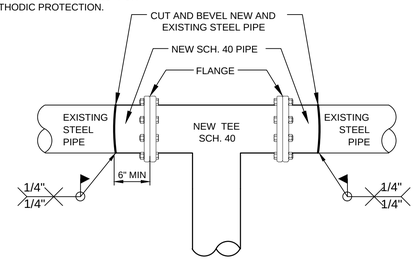

3 GAS LINE POINT OF CONNECTION

C106 | C505 NTS

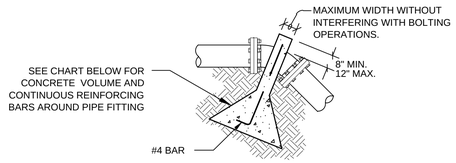

UPWARD THRUST BLOCKING

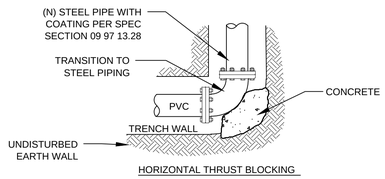

HORIZONTAL THRUST BLOCKING

UPWARD THRUST BLOCKING						
REQUIRED REINFORCING BARS & CUBIC YARDS OF P.C. CONCRETE						
PIPE SIZE	45° BEND			22 1/2° BEND		
	CONC. C.Y.	REINF		CONC. C.Y.	REINF	
		QTY.	SIZE		QTY.	SIZE
6"	0.15	1	#4	0.15	1	#4

HORIZONTAL THRUST BLOCKING				
(BLOCKING HEIGHT GREATER THAN PIPE O.D.) (BLOCKING WIDTH BETWEEN 1 & 2 TIMES HEIGHT)				
REQUIRED SQ. FT. OF UNDISTURBED EARTH WALL FOR REACTION BACKING				
TYPE OF FITTINGS				
PIPE SIZE	TEE & PLUG	BENDS		
		90°	45°	22 1/2°
6"	3.5	5	3	1.5

NOTES:
1. DO NOT COVER BELLS OR FLANGES WITH CONCRETE
2. WRAP ALL FITTINGS WITH VISQUEEN.
3. BACK ALL TEES ACCORDING TO SIZE OF BRANCH.
4. ALL BENDS WHERE FITTINGS ARE USED, BOTH HORIZONTAL OR VERTICAL SHALL BE BACKED.
5. REACTION BACKING TABLE IS BASED ON 80 P.S.I. AND SOIL BEARING PRESSURE OF 1000 LB./SQ.FT.
6. ALL CONCRETE SHALL BE 3500 P.S.I.

4 THRUST BLOCK

C106,C503,C505 | C505 N.T.S.

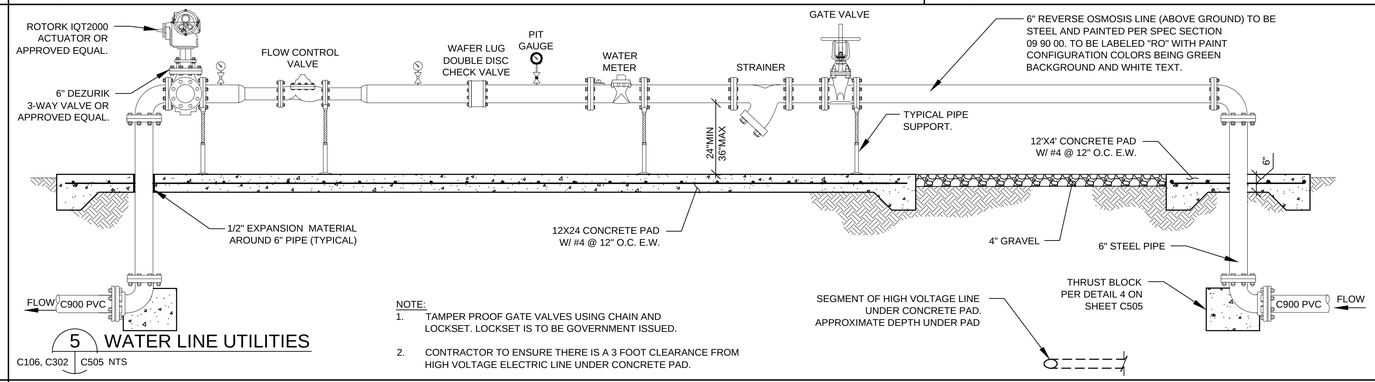

NOTE:
1. TAMPER PROOF GATE VALVES USING CHAIN AND LOCKSET. LOCKSET IS TO BE GOVERNMENT ISSUED.
2. CONTRACTOR TO ENSURE THERE IS A 3 FOOT CLEARANCE FROM HIGH VOLTAGE ELECTRIC LINE UNDER CONCRETE PAD.

5 WATER LINE UTILITIES

C106, C302 | C505 NTS

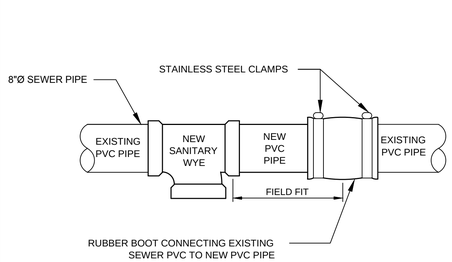

6 SEWER LINE POINT OF CONNECTION

C106 | C505 NTS

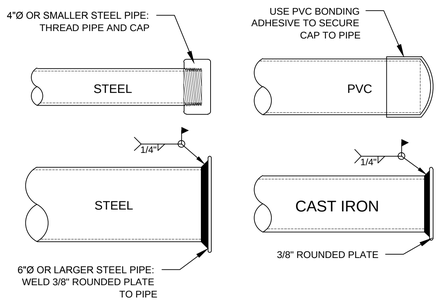

7 CAPS FOR PIPES

C101 | C505 NTS

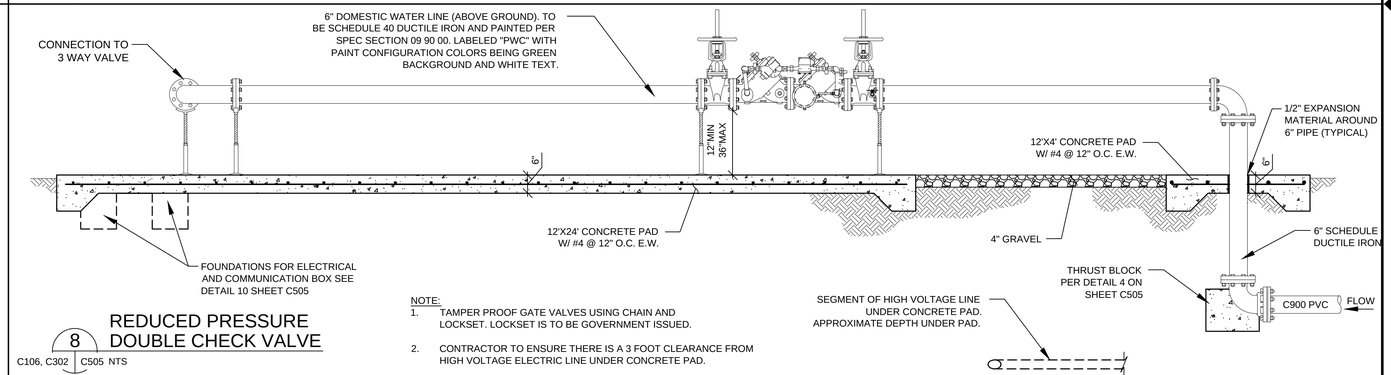

NOTE:
1. TAMPER PROOF GATE VALVES USING CHAIN AND LOCKSET. LOCKSET IS TO BE GOVERNMENT ISSUED.
2. CONTRACTOR TO ENSURE THERE IS A 3 FOOT CLEARANCE FROM HIGH VOLTAGE ELECTRIC LINE UNDER CONCRETE PAD.

8 REDUCED PRESSURE DOUBLE CHECK VALVE

C106, C302 | C505 NTS

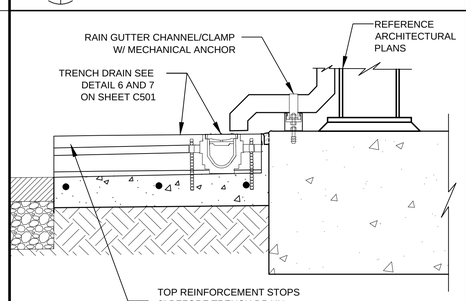

9 ROOF DRAIN

C103 | C505 NTS

NOTE:
DOWEL BARS NOT SHOWN FOR CLARITY. REFER TO DETAIL 1 ON SHEET C505.

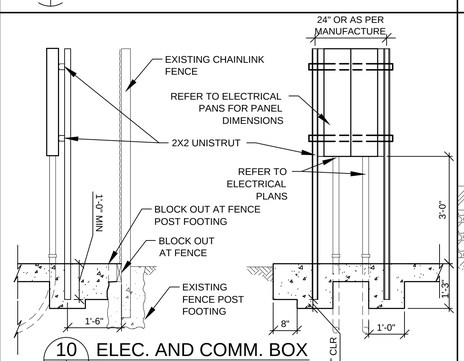

10 ELEC. AND COMM. BOX

C106,C505 | C505 NTS

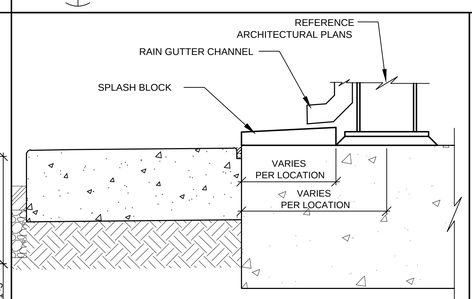

NOTE:
REINFORCEMENT AND DOWEL BARS NOT SHOWN FOR CLARITY. REFER TO DETAIL 1 ON SHEET C505.

11 SPLASH BLOCK

C103 | C505 NTS

REGISTERED PROFESSIONAL ENGINEER ERIC CHRISTOPHER FRAMPTON No. 64567 CIVIL STATE OF CALIFORNIA

ZONE	LETTER	DESCRIPTION	DRAWN	DATE	APPRVD

REVISIONS

DRAWN A.FERNANDEZ	DATE
DESIGNED E.FRAMPTON	DATE
CHECKED R.CROENI	DATE
A&E PM G.HITE	DATE
NASA PM W.LEE	DATE
REQUESTER G.RAICHE	DATE
R&QA	DATE
SAFETY	DATE
SUPERVISOR S.FRANKEL	DATE

Ames Research Center
Moffett Field, California

REPLACE ARC JET COMPLEX SVS BOILER
CIVIL
DETAILS

SIZE	CAGE CODE	REV
D	25307	A
SCALE AS NOTED	INDEX	SHEET OF

231-1300-C505

FILE NAME: 231-C505.DWG 1/28/2013

DWG: W:\2011 Projects\051100\Dwg\Civil\231-C505.dwg Version: 18.1s (LMS Tech) User: KatieA
DATE: Jan 25, 2013 - 8:59:18 am

DWG NO. **A231-1300- A001** | SH. | REV

ARCHITECTURAL ABBREVIATIONS

@	AT
ACOUST	ACOUSTICAL
ACT	ACOUSTICAL CEILING TILE
ADJ	ADJUSTABLE
AFF	ABOVE FINISH FLOOR
ALUM	ALUMINUM
APPROX	APPROXIMATE
ARCH	ARCHITECTURAL
BD	BOARD
BLDG	BUILDING
BLK	BLOCK
BLKG	BLOCKING
B.O.	BOTTOM OF
BUR	BUILT-UP ROOFING
C	CONDUIT
CAB	CABINET
CBC	CALIFORNIA BUILDING CODE
C.B.	CATCH BASIN
CEM PLAS	CEMENT PLASTER
CL	CENTERLINE
CLG	CEILING
CLKG	CAULKING
CLR	CLEAR
CO	CLEAN OUT
COL	COLUMN
CONC	CONCRETE
CONT	CONTINUOUS
COTR	CONTRACTING OFFICER TECHNICAL REPRESENTATIVE
CT	CERAMIC TILE
DBL	DOUBLE
DET	DETAIL
D.F.	DRINKING FOUNTAIN
DIA	DIAMETER
DIM	DIMENSION
DN	DOWN
DR	DOOR
DWG	DRAWING
DWR	DRAWER
(E)	EXISTING
EA	EACH
ELEC	ELECTRICAL
EMER	EMERGENCY
ENCL	ENCLOSURE
EQ	EQUAL
F.A.	FIRE ALARM
FD	FLOOR DRAIN
F.E.	FIRE EXTINGUISHER
F.E.C.	FIRE EXTINGUISHER CABINET
FIN	FINISH
FLEX	FLEXIBLE
FLR	FLOOR
FLUOR	FLUORESCENT
F.O.F.	FACE OF FINISH
F.O.C.	FACE OF CONC.
F.O.S.	FACE OF STUD
FURR	FURRING
FTG	FOOTING
GA	GAUGE
GALV	GALVANIZED
GB	GRAB BAR
GND	GROUND
GFCI	GOVERNMENT FURNISHED CONTRACTOR INSTALLED
GWB	GYPSUM WALLBOARD
GYP	GYPSUM
H.B.	HOSE BIB
H/C	HANDICAP
HDWR	HARDWARE
HM	HOLLOW METAL
HR	HOUR
HT	HEIGHT
LAM	LAMINATE
LAV	LAVATORY
LT	LIGHT
MAX	MAXIMUM
MECH	MECHANICAL
MEMB	MEMBRANE
MET	METAL
MFR	MANUFACTURER
MIN	MINIMUM
MISC	MISCELLANEOUS
MTD	MOUNTED
MTG	MOUNTING
M.R.	MOISTURE RESISTANT
(N)	NEW
N.I.C.	NOT IN CONTRACT
NO.	NUMBER
NTS, N.T.S.	NOT TO SCALE
OC, O.C.	ON CENTER
OCC.	OCCUPANCY
OFF	OFFICE
OL	OCCUPANT LOAD
OPNG	OPENING
OH	OPPOSITE HAND
PL	PLATE
PLYWD	PLYWOOD
PNL	PANEL
PR	PAIR
P.T.	PRESSURE TREATED
PTD	PAINTED
PVC	POLYVINYLCHLORIDE
(R)	RELOCATED
RECEP	RECEPTACLE
REF	REFERENCE
REFL	REFLECTED
REINF	REINFORCED
REQ'D	REQUIRED
RM	ROOM
R.O.	ROUGH OPENING
S.C.	SOLID CORE
S.C.D.	SEE CIVIL DRAWINGS
SCHED	SCHEDULE
SD	STORM DRAIN
SHWR	SHOWER
SHT	SHEET
SIM	SIMILAR
SMS	SHEET METAL SREWS
SPEC	SPECIFICATION
SF	SQUARE FEET
SQ	SQUARE
S.S.D.	SEE STRUCTURAL DRAWINGS
STC	SOUND TRANSMISSION CLASS
STD	STANDARD
STOR	STORAGE
STRUC	STRUCTURAL
TOS	TOP OF STEEL
TOP	TOP OF PARAPET
TS	TUBE STEEL
TYP	TYPICAL
UON, U.O.N.	UNLESS OTHERWISE NOTED
VCT	VINYL COMPOSITION TILE
W/	WITH
WC	WATER CLOSET
W/O	WITHOUT
WP	WATER PROOF
WD	WOOD
WR	WATER RESISTANT
WSCT	WAINSCOT
WT	WEIGHT
W.W.F	WELDED WIRE FABRIC

ARCHITECTURAL SYMBOLS

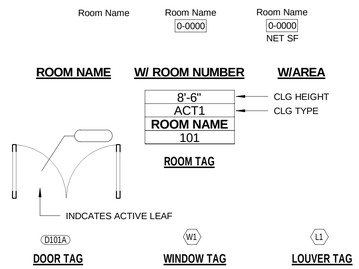

WALL LEGEND

- (N) MESH PARTITION
- (E) CMU
- (E) TO REMAIN
- (E) TO BE DEMOLISHED
- (N) WALL

REFLECTED CEILING LEGEND

- SUPPLY DIFFUSER
- RETURN AIR INLET
- SURFACE MOUNTED OR SUSPENDED LIGHT FIXTURE AS NOTED
- ACOUSTIC CEILING ON SUSPENDED CEILING GRID
- SMOKE DETECTOR
- EXIT SIGN
- BATTERY PACK EMERGENCY LIGHT
- HEAT DETECTOR

LICENSED ARCHITECT DAVID NORMAN CRAWFORD C24904 3/31/13 RENEWAL DATE STATE OF CALIFORNIA

ARCHITECTURAL GENERAL NOTES

1. UNLESS OTHERWISE NOTED, PLAN DIMENSIONS ARE TO CENTERLINE OF COLUMNS, FACE OF CONCRETE OR CMU AND FACE OF GYPSUM BOARD FINISH.

2. REPETITIVE FEATURES ARE NOT DRAWN IN THEIR ENTIRETY AND SHALL BE COMPLETELY PROVIDED AS IF DRAWN IN FULL.

3. VERIFY ALL ROUGH-IN DIMENSIONS FOR EQUIPMENT PROVIDED IN THIS CONTRACT, OR BY OTHERS.

4. DO NOT SCALE DRAWINGS. VERIFY ALL DIMENSIONS, GRADES, CONDITIONS AT SITE PRIOR TO COMMENCING THE WORK, AND REPORT ANY DISCREPANCIES TO THE CONTRACTING OFFICER IN WRITING. DIMENSIONS SHALL TAKE PRECEDENCE OVER SCALES SHOWN ON DRAWINGS. CONTRACTOR SHALL NOTIFY CONTRACTING OFFICER WHERE DISCREPANCIES OCCUR BETWEEN DRAWINGS, GENERAL NOTES AND SPECIFICATIONS.

5. CONTRACTOR SHALL PROVIDE TEMPORARY EXIT SIGNS TO ASSURE A MEANS OF EGRESS DURING CONSTRUCTION.

6. CONTRACTOR SHALL VERIFY SIZES AND LOCATION OF MECHANICAL EQUIPMENT PADS AND BASES AS WELL AS POWER AND WATER OR DRAIN INSTALLATION WITH EQUIPMENT MANUFACTURERS BEFORE PROCEEDING WITH THE WORK. CHANGES TO ACCOMMODATE FIELD CONDITIONS OR SUBSTITUTIONS SHALL BE MADE WITHOUT ADDITIONAL CHARGE TO THE GOVERNMENT.

7. CONTRACTOR SHALL SUBMIT A DRAWING SHOWING THE LOCATION OF ALL FIRE LIFE SAFETY DEVICES TO THE FIRE MARSHAL AND THE CONTRACTING OFFICER FOR ON SITE APPROVAL PRIOR TO INSTALLATION.

8. CONTRACTOR SHALL PROVIDE AND INSTALL ALL STIFFENERS, BRACING, BLOCKING, HANGERS, BACK-UP PLATES AND SUPPORTING BRACKETS REQUIRED FOR THE INSTALLATION OF ALL CASEWORK, TOILET ACCESSORIES, FIXTURES AND PARTITIONS AND ALL WALL MOUNTED OR SUSPENDED MECHANICAL, ELECTRICAL, OR MISCELLANEOUS EQUIPMENT AND FURNISHINGS.

9. VERIFY SIZE OF ALL MECHANICAL OPENINGS THROUGH THE ROOF OR CANOPY WITH MECHANICAL EQUIPMENT MANUFACTURER.

10. FOR MECHANICAL OPENING SIZES AND LOCATIONS IN WALLS, COORDINATE WITH MECHANICAL DRAWINGS. AN ACOUSTICAL SEAL SHALL BE PROVIDED BETWEEN ALL DUCTS, PIPING, AND PARTITIONS.

11. SAW CUTTING AND TRENCHING OF (E) CONCRETE SLAB ON GRADE SHALL BE DONE WITH CARE TO PROTECT EXISTING UNDERGROUND INSTALLATION. CONTRACTOR SHALL PERFORM EITHER RADIO FREQUENCY OR ULTRASONIC DETECTION TO IDENTIFY POTENTIAL UNDERGROUND UTILITIES PRIOR TO THE WORK.

ZONE	LETTER	DESCRIPTION	DRAWN	DATE	APPRVD

REVISIONS

DRAWN P.ALDEN	DATE
DESIGNED T.WONG	DATE
CHECKED D.CRAWFORD	DATE
A&E PM G.HITE	DATE
NASA PM W.LEE	DATE
REQUESTER G.RAICHE	DATE
R&QA	DATE
SAFETY/PSM	DATE
SUPERVISOR S. FRANKEL	DATE

Ames Research Center
Moffett Field, California

REPLACE ARC JET COMPLEX SVS BOILER
ARCHITECTURAL

ARCHITECTURAL GENERAL NOTES, SYMBOLS AND ABBREVIATIONS

SIZE	CAGE CODE		REV
D	25307	A 231-1300- A001	
SCALE: As indicated	INDEX	SHEET	OF

FILE NAME: 60212932_SVS-Boiler Plant - Architecture.rvt 12/12/12

AECOM: 60212932_0001

C:\Users\wbonaldi\Documents\Revit2011\60212932_SVS-Boiler Plant_Arch-CENTRAL_wbonaldi.rvt
1/29/2013 8:01:53 AM

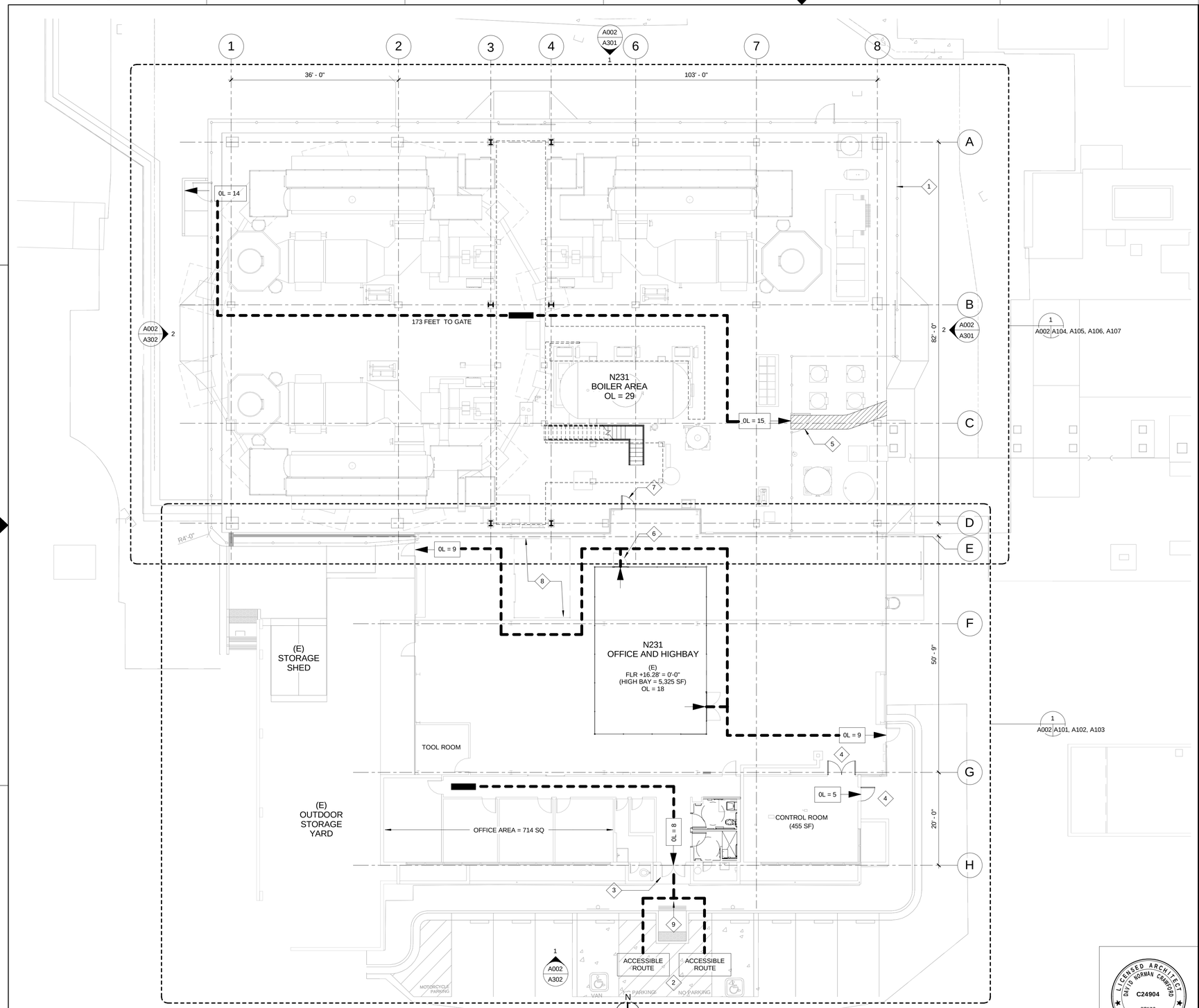

1 SITE AND EGRESS PLAN
3/32" = 1'-0"

SHEET NOTES

1. BUILDING N231
   a. THE EXISTING BUILDING IS A SINGLE STORY F-2 OCCUPANCY, LOW HAZARD.
   b. BUILDING CONSTRUCTION IS TYPE III-B (BUILDING CONTAINS NO AUTOMATIC SPRINKLER SYSTEM.)
   c. THERE ARE NO (E) FIRE RATED WALLS IN THE BUILDING.

2. BOILER AND DEAERATOR YARD CANOPY IS AN OPEN AIR EXTERIOR CANOPY. AS AN EXTENSION OF BUILDING N231 IT WILL ALSO BE F-2 AND TYPE III-B CONSTRUCTION, AND WILL NOT BE SPRINKLERED. PER CBC 503.1.1, SPECIAL INDUSTRIAL OCCUPANCIES, BUILDINGS AND STRUCTURES HOUSING SPECIAL INDUSTRIAL PROCESSES ARE EXEMPT FROM THE BUILDING HEIGHT AND AREA LIMITS OF TABLE 503.
   a. NET YARD AREA ENCLOSED BY FENCE IS APPROX.8,700 SF. PER CBC TABLE 1004.1.1, OCCUPANT LOAD CALCULATION FOR MECHANICAL EQUIPMENT ROOM IS 300 SF PER OCCUPANT: 8,700 SF / 300 OCCUPANT = 29 OCCUPANTS IN ENCLOSED YARD.
   b. PER CBC TABLE 1015.1, SINGLE EXIT PERMITTED WHEN OCCUPANT LOAD IS LESS THAN 49 OCCUPANTS.
   c. PER CBC TABLE 1016.1, MAXIMUM TRAVEL DISTANCE IN F OCCUPANCY WITHOUT SPRINKLERS IS 200 FEET.

KEY NOTES

1. REFER TO CIVIL FOR CHAINLINK FENCING AND ALL GATES.
2. REFER TO CIVIL FOR ACCESSIBLE PARKING DESIGN.
3. MAIN BUILDING ENTRY; CARD READER ENTRY/FREE EGRESS.
4. CONTROLED ENTRY; CARD READER ENTRY/FREE EGRESS.
5. YARD ENTRY; CARD READER ENTRY/FREE EGRESS.
6. MESH CAGE ENTRY; CARD READER ENTRY/FREE EGRESS.
7. BUILDING/YARD ENTRY/EXIT; CARD READER CONTROLLED BOTH SIDES, NOT AN EXIT.
8. (E) CAGED AREA.
9. ACCESSIBLE ROUTE OF TRAVEL (TYPICAL).

ZONE	LETTER	DESCRIPTION	DRAWN	DATE	APPRVD

REVISIONS

DRAWN P.ALDEN — DATE
DESIGNED T.WONG — DATE
CHECKED D.CRAWFORD — DATE
A&E PM G.HITE — DATE
NASA PM W.LEE — DATE
REQUESTER G.RAICHE — DATE
R&QA — DATE
SAFETY/PSM — DATE
SUPERV/SCR S. FRANKEL — DATE

LICENSED ARCHITECT DAVID NORMAN CRAWFORD C24904 3/31/13 RENEWAL DATE STATE OF CALIFORNIA

Ames Research Center
Moffett Field, California

REPLACE ARC JET COMPLEX SVS BOILER
ARCHITECTURAL

SITE AND EGRESS PLAN

SIZE D | CAGE CODE 25307 | A 231-1300- A002 | REV
SCALE: 3/32" = 1'-0" | INDEX | SHEET | OF

FILE NAME: 60212932_SVS-Boiler Plant - Architecture.rvt 12/12/12

DWG NO. A231-1300- A002 | SH. | REV

AECOM: 60212932.0001

C:\Users\wbonaldi\Documents\Revit\2011\60212932_SVS-Boiler Plant_Arch-CENTRAL_wbonaldi.rvt
1/29/2013 8:02:01 AM

DWG NO. **A231-1300- A101** | SH. | REV

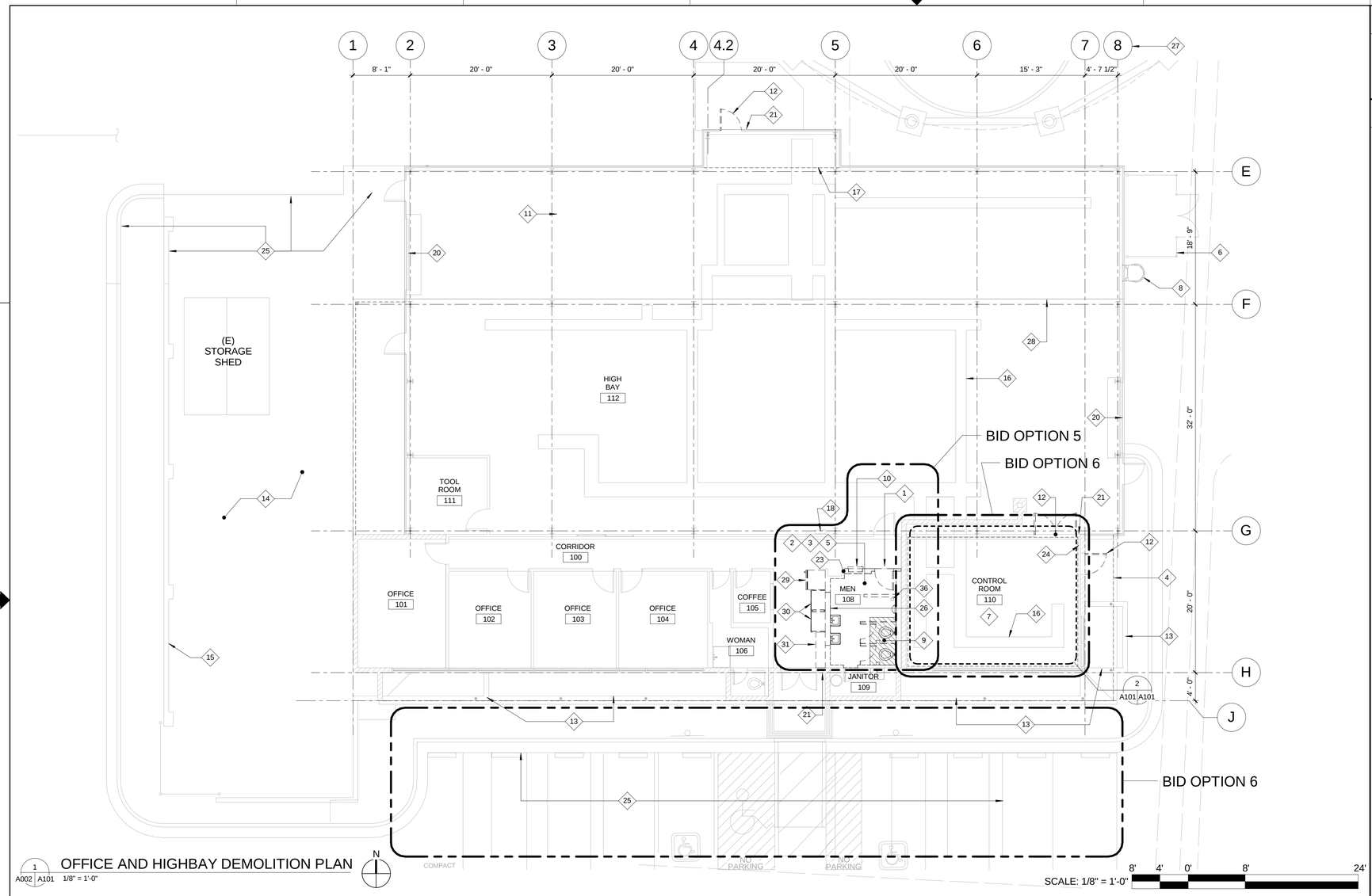

1 A002 A101 OFFICE AND HIGHBAY DEMOLITION PLAN 1/8" = 1'-0"

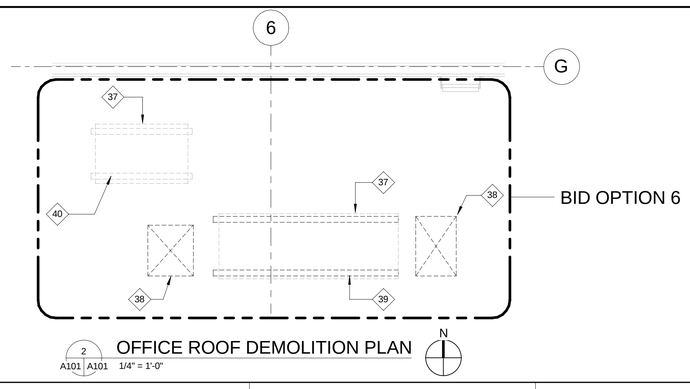

2 A101 A101 OFFICE ROOF DEMOLITION PLAN 1/4" = 1'-0"

SHEET NOTES

1. ROOM 108 MEN'S TOILET ROOM. THE (E) WALL TILE WAINSCOT IS KNOWN TO CONTAIN ASBESTOS. REFER TO HEALTH, SAFETY AND ENVIRONMENTAL NOTES ON G005.
2. SEE SHEET G006 FOR A MORE COMPLETE DESCRIPTION OF EACH BID OPTION.

KEY NOTES

1. REMOVE (E) DOOR AND FRAME. EXISTING WALL MAY BE LOAD BEARING, PROVIDE TEMP SUPPORT AS REQUIRED.
2. REMOVE (E) MUD SET WALL TILE AND GYP WALLBOARD THROUGHOUT ROOM 108 REFER TO SHEET NOTE 1.
3. REMOVE (E) FLOORING, FLOOR BASE, PLUMBING FIXTURES AND WALL MOUNTED ACCESSORIES THROUGHOUT ROOM 108.
4. (E) ROOF ABOVE, TO REMAIN.
5. REMOVE (E) CEILING MOUNTED ITEMS THROUGHOUT ROOM 108. (E) 1/2" GYP BD CEILING ATTACHED TO BOTTOM OF ROOF FRAMING +10'-1" TO REMAIN.
6. (E) EXTERIOR CHAINLINK ENCLOSURE, TO REMAIN.
7. AT (E) ROOM 110, REMOVE (E) FLOORING, FLOOR BASE, WALL MOUNTED ACCESSORIES AND SUSPENDED ACOUSTICAL TILE CEILING. EXISTING 1/4" CHECKER FLOOR PLATE FOR TRENCH TO REMAIN. REMOVE (E) WINDOW BLINDS AND MOUNTING HARDWARE. REFER TO ELECTRICAL DRAWING E209 FOR (E) ITEMS IDENTIFIED AS TO REMAIN. REFER TO STRUCTURAL DRAWING FOR NEW ROOFING FRAMING MEMBERS THAT MAY REQUIRE PARTIAL REMOVAL OF (E) GYP ADHERED TO BOTTOM OF ROOF FRAMING.
8. (E) LADDER TO ROOF, TO REMAIN.
9. SAWCUT (E) 5" CONC FLOOR SLAB W/#4 BARS AT 12" OC EACH WAY FOR NEW SHOWER. SEE M405 FOR (E) UTILITIES, SEE 1/A501 FOR NEW LAYOUT.
10. DEMO (E) AND ABANDONED FIRE HOSE CABINET AND WALL. (E) WALL MAY BE LOAD BEARING. PROVIDE TEMP SUPPORT AS REQUIRED.
11. (E) MESH ENCLOSURE, TO REMAIN.
12. COORDINATE WITH COTR FOR DEMOLITION AND REPLACEMENT OF (E) DOOR AND FRAME WITH (N) SECURITY DOOR AND DEVICES.
13. (E) BRICK PLANTER, TO REMAIN.
14. (E) STORAGE YARD.
15. (E) CMU YARD WALL TO REMAIN.
16. (E) FLOOR TRENCH W/COVER TO REMAIN, TYP. REMOVE ALL ASSOCIATED SUPPORT ITEMS SUCH AS UNISTRUT, FOR CONDUIT, CONTROLS EQUIPMENT, ETC. AND ANCHOR BOLTS. GRIND SMOOTH WITH FLOOR.
17. BOTTOM OF (E) MEZZANINE STRUCTURE AT +7'-4" AFF.
18. LOCATION OF (E) LOW VOLTAGE DOOR CONTROLS AND POWER SUPPLIES, TO REMAIN. REFER TO ELECTRICAL E213 FOR MORE INFORMATION.
19. NOT USED.
20. (E) OVERHEAD DOOR.
21. LOCATION OF (E) CARD READER, TO BE RELOCATED.
22. NOT USED.
23. (E) 2" FIRE RISER TO REMAIN, SEE 3/M405.
24. REMOVE (E) FIRE EXTINGUISHER AND WALL BRACKET FOR RE-INSTALLATION IN SAME LOCATION.
25. REFER TO CIVIL DRAWINGS FOR DEMOLITION IN THIS AREA.
26. REMOVE SECTION OF (E) STAGGERED WOOD STUD WALL FOR NEW DOORS PER 4 AND 5/A701. RETAIN (E) WOOD TOP PLATE IN PLACE TO RECEIVE NEW METAL STUD TOP TRACK.
27. BUILDING GRIDS 1 THRU 8 DO NOT CORRELATE WITH BOILER YARD GRIDS.
28. (E) FLOOR SLAB JOINT.
29. (E) REFRIGERATOR TO BE RELOCATED.
30. (E) SUPPLY CABINETS (2) TO BE RELOCATED.
31. (E) MAIL STOP TO BE RELOCATED.
32. NOT USED.
33. NOT USED.
34. NOT USED.
35. NOT USED.
36. (E) CLEANOUT TO REMAIN.
37. DEMO OF ROOF TOP EQUIPMENT AND DUCTWORK PER MECH.
38. (E) ROOF DECK OPENINGS.
39. REMOVE (E) SLEEPERS.
40. REMOVE (E) SLEEPERS AND SHEET METAL CAPS, AND REPAIR ROOF.

LICENSED ARCHITECT DAVID NORMAN CRAWFORD C24904 3/31/13 RENEWAL DATE STATE OF CALIFORNIA

ZONE	LETTER	DESCRIPTION	DRAWN	DATE	APPRVD

REVISIONS

DRAWN P.ALDEN	DATE	
DESIGNED T.WONG	DATE	
CHECKED D.CRAWFORD	DATE	
A&E PM G.HITE	DATE	
NASA PM W.LEE	DATE	
REQUESTER G.RAICHE	DATE	
R&QA	DATE	
SAFETY/PSM	DATE	
SUPERVISOR S. FRANKEL	DATE	

Ames Research Center
Moffett Field, California

REPLACE ARC JET COMPLEX SVS BOILER
ARCHITECTURAL

OFFICE AND HIGHBAY DEMOLITION PLAN

SIZE	CAGE CODE		REV
D	25307	A 231-1300- A101	
SCALE: As indicated	INDEX	SHEET	OF

FILE NAME: 60212932_SVS-Boiler Plant - Architecture.rvt 12/12/12

C:\Users\wbonald\Documents\Rev\2011\60212932_SVS-Boiler Plant_Arch-CENTRAL_wbonald\.rvt
1/29/2013 8:02:03 AM

AECOM: 60212932.0001

DWG NO. **A231-1300- A102** | SH. | REV

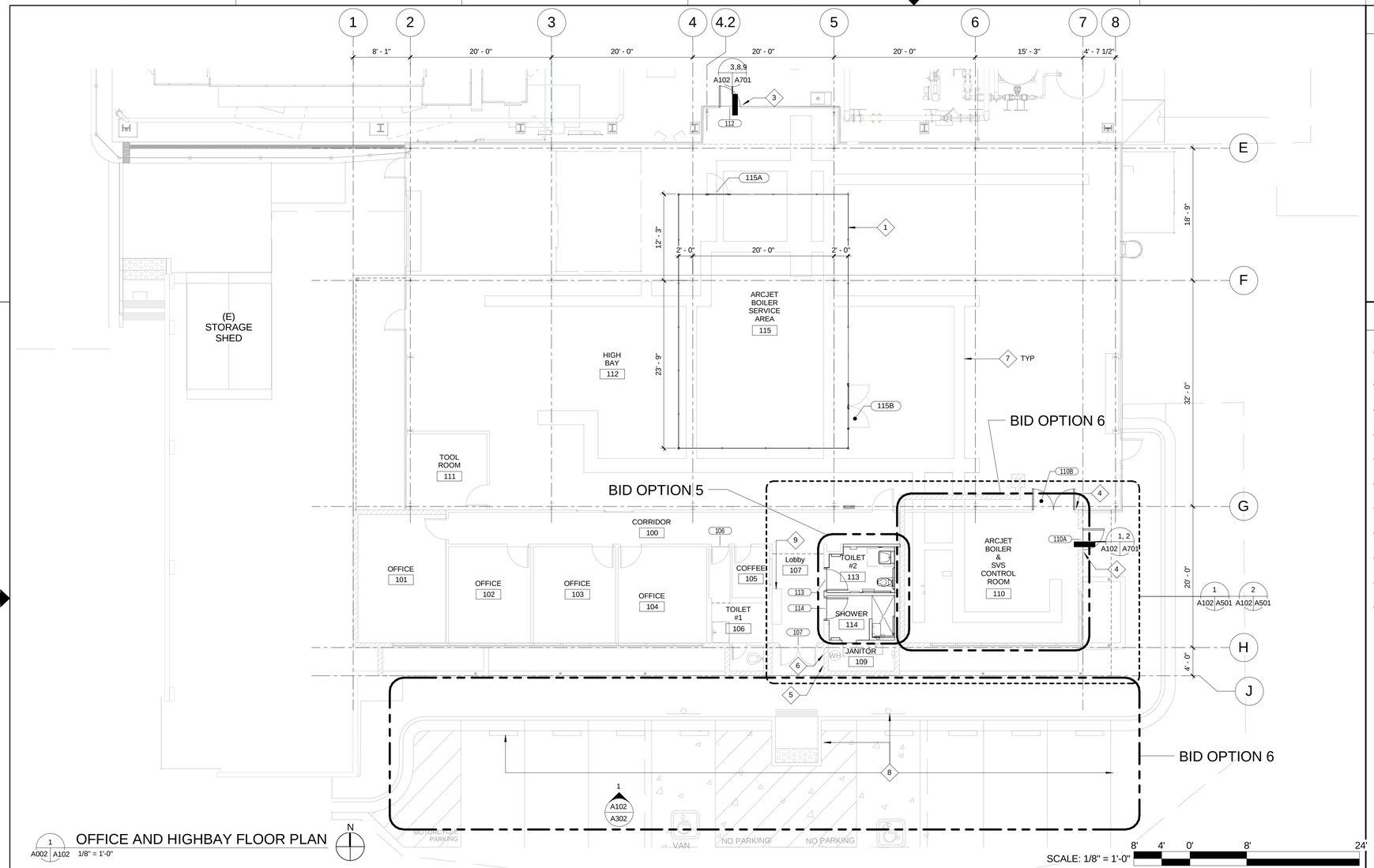

1 A002 A102 OFFICE AND HIGHBAY FLOOR PLAN 1/8" = 1'-0"

N

SCALE: 1/8" = 1'-0" 8' 4' 0' 8' 24'

SHEET NOTES

1. CMU WALL
2. STUD WALL
3. SEE SHEET G006 FOR A MORE COMPLETE DESCRIPTION OF EACH BID OPTION.

KEY NOTES

1. PROVIDE 7'-0" TALL METAL MESH ENCLOSURE (1864 S.F. AREA). ANCHOR TO EXISTING FLOOR. DO NOT ANCHOR TO (E) FLOOR TRENCH COVERS.
2. NOT USED.
3. REPLACE (E) DOOR WITH (N) DOOR AND LOCKSET, AND CARD READER AT BOTH SIDES OF DOOR.
4. PROVIDE (N) CARD READER FOR ENTRY.
5. REPLACE (E) CARD READER.
6. (E) CONTROL CARD READER LOCATION.
7. (E) METAL PLATE FLOOR TRENCH COVER.
8. REFER TO CIVIL DRAWINGS FOR INFORMATION ON ACCESSIBLE PARKING, SIGNAGE AND SIDEWALK ACCESS.
9. RELOCATED MAIL STOP CASEWORK.
10. NOT USED.
11. NOT USED.

DOOR SCHEDULE

DOOR NUMBER	DOOR (TYPE x2 INDICATES PAIR) WIDTH ^ = 3'-0"	HEIGHT ^ = 7'-0"	THICK ^ =1-3/4"	TYPE #	MATERIAL ^ = HM	GLASS	FRAME GLASS	FRAME MATERIAL	FRAME TYPE #	FIRE RATING (IN MIN)	HARDWARE GROUP	DETAILS HEAD	DETAILS JAMB	DETAILS THRES	ADA SIGNAGE DETAIL	REMARKS
106	2'-6"	^	^	LB	WD	-	-	WD	-	-	-	-	-	-	13/A701	(E) DOOR AND FRAME. DIRECTION SIGN ONLY.
107	6'-0"	^	^	FGx2	ALUM	(E)	-	ALUM	(E)	-	HW-5	-	-	-	11/A701	(E) DOOR AND FRAME
112	^	^	^	F	^	-	-	HM	-	-	HW-4	8/A701	3/A701	9/A701	-	
113	^	^	^	LB	WD	-	-	WD	-	-	HW-1	4/A701	5/A701	-	14/A701	
114	^	^	^	LB	WD	-	-	WD	-	-	HW-1	4/A701	5/A701	-	14/A701	
110A	^	^	^	F	^	-	-	HM	-	-	HW-2	1/A701	1/A701	2/A701	-	
110B	6'-0"	^	^	Fx2	^	-	-	HM	-	-	HW-3	10/A701	10/A701	-	-	
115A	^	^	-	MESH	METAL	-	-	METAL	-	-	HW-6	-	-	-	-	
115B	6'-0"	^	-	MESH	METAL	-	-	METAL	-	-	-	-	-	-	-	
117A	-	-	-	CL	METAL	-	-	METAL	-	-	-	-	-	-	-	REFER TO CIVIL FOR ADDITIONAL INFO
117B	-	-	-	CL	METAL	-	-	METAL	-	-	-	-	-	-	-	REFER TO CIVIL FOR SLIDING GATE
117C	-	-	-	CL	METAL	-	-	METAL	-	-	-	-	-	-	-	REFER TO CIVIL FOR SLIDING GATE
117D	-	-	-	CL	METAL	-	-	METAL	-	-	-	-	-	-	-	REFER TO CIVIL FOR SLIDING GATE
117E	-	-	-	CL	METAL	-	-	METAL	-	-	-	-	-	-	-	REFER TO CIVIL FOR ADDITIONAL INFO
117F	-	-	-	CL	METAL	-	-	METAL	-	-	-	-	-	-	-	REFER TO CIVIL FOR ADDITIONAL INFO

DOOR TYPES

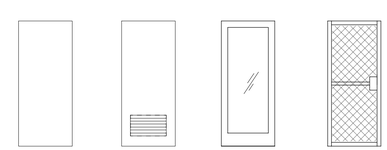

LICENSED ARCHITECT DAVID NORMAN CRAWFORD C24904 3/31/13 RENEWAL DATE STATE OF CALIFORNIA

ZONE	LETTER	DESCRIPTION	DRAWN	DATE	APPRVD

REVISIONS

DRAWN P.ALDEN DATE
DESIGNED T.WONG DATE
CHECKED D.CRAWFORD DATE
A&E PM G.HITE DATE
NASA PM W.LEE DATE
REQUESTER G.RAICHE DATE
R&QA DATE
SAFETY/PSM DATE
SUPERVISOR S. FRANKEL DATE

Ames Research Center
Moffett Field, California

REPLACE ARC JET COMPLEX SVS BOILER
ARCHITECTURAL

OFFICE AND HIGHBAY FLOOR PLAN

SIZE D | CAGE CODE 25307 | A 231-1300- A102 | REV
SCALE: As indicated | INDEX | SHEET | OF

FILE NAME: 60212932_SVS-Boiler Plant - Architecture.rvt 12/12/12

C:\Users\wbonald\Documents\Rev\2011\60212932_SVS-Boiler Plant_Arch-CENTRAL_wbonald\.rvt
1/29/2013 8:02:09 AM

AECOM: 60212932_0001

DWG NO. **A231-1300- A103** | SH. | REV

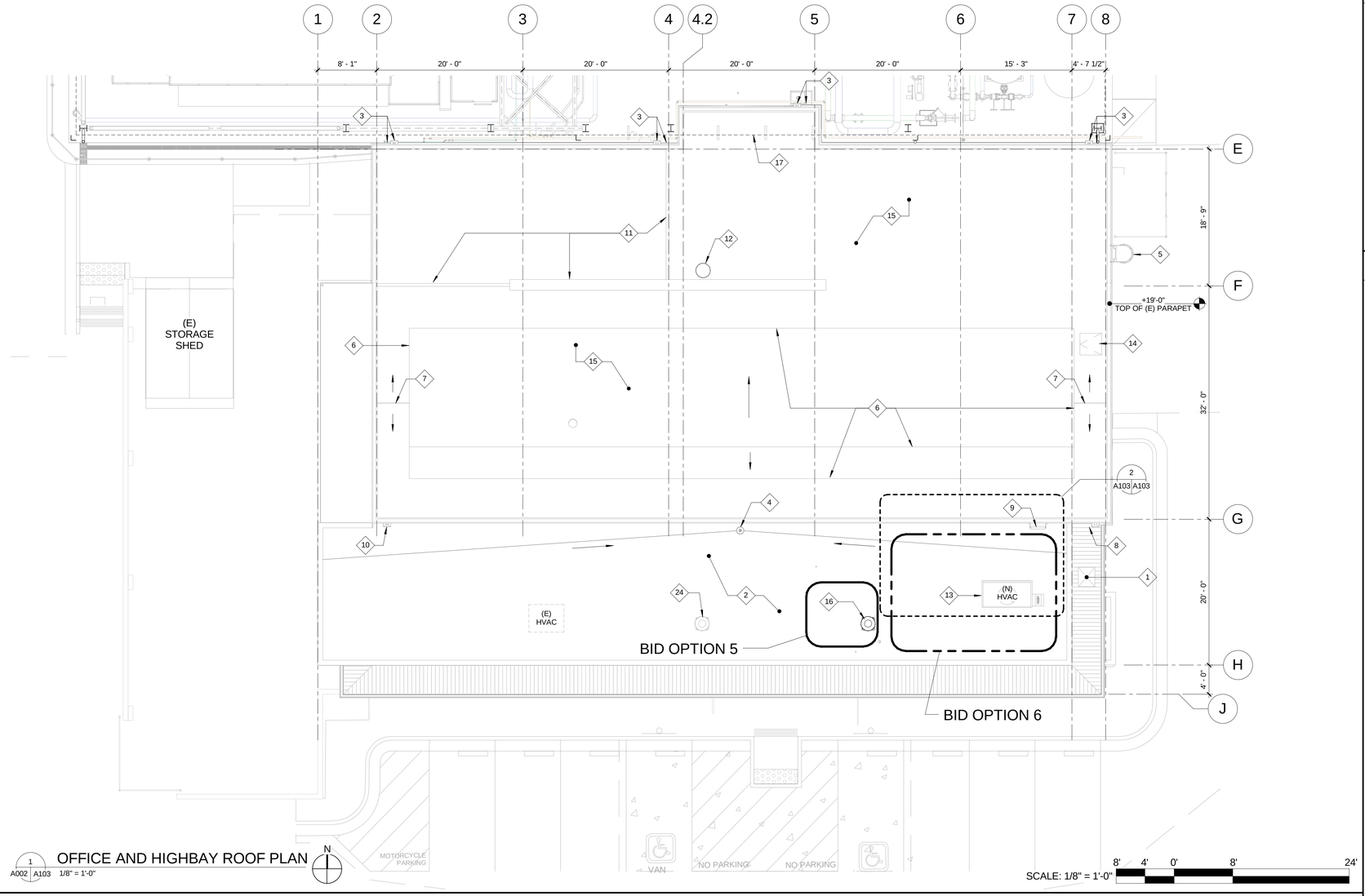

1 A002 A103 OFFICE AND HIGHBAY ROOF PLAN 1/8" = 1'-0"

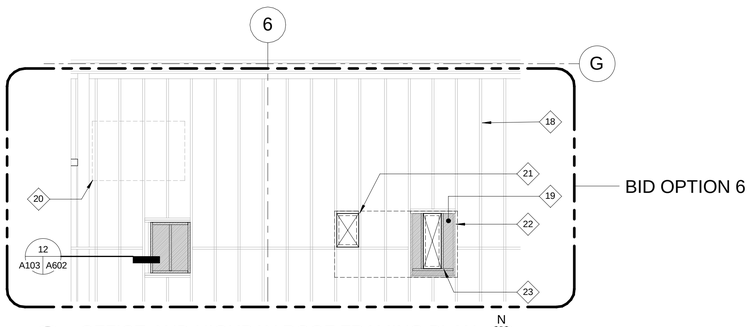

2 A103 A103 OFFICE AND HIGHBAY ROOF FRAMING PLAN 1/4" = 1'-0"

SHEET NOTES

1. SEE SHEET G006 FOR A MORE COMPLETE DESCRIPTION OF EACH BID OPTION.

KEY NOTES

1. (E) METAL MANSARD ROOF WITH (E) OPENING AS SHOWN.
2. (E) CAP SHEET OVER BUR.
3. (E) SCUPPERS AND DOWNSPOUTS.
4. (E) 3" ROOF DRAIN.
5. (E) ROOF LADDER, TO REMAIN.
6. (E) STEPPED ROOF AREA.
7. (E) ROOF RIDGE.
8. (E) SCUPPER AND DOWNSPOUT FROM HIGH BAY ROOF TO GUTTER AT LOW CANOPY.
9. (E) LADDER FROM HIGH BAY ROOF TO LOWER ROOF.
10. (E) SCUPPER AND DOWNSPOUT FROM HIGH BAY ROOF TO LOWER ROOF.
11. (E) PARAPET, HEIGHT AND CONSTRUCTION TYPE VARIES.
12. (E) EXHAUST DUCT FOR TEST RIG TO REMAIN.
13. REPLACE (E) HVAC WITH NEW HVAC UNIT. CURB AND NEW BASE FLASHING AT ROOF SIM TO 13/A602.
14. (E) ROOF HATCH (INOPERABLE), TO REMAIN.
15. (E) PVC ROOFING.
16. (E) EXHAUST FAN REPLACED BY NEW PER MECH REFER TO 12/A602.
17. LINE OF NEW CANOPY ABOVE ROOF OF N231.
18. (E) 2X ROOF FRAMING.
19. LEDGER, FOR NAILING SEE S108.
20. (E) ROOF HATCH (INOPERABLE), TO REMAIN.
21. LOCATE NEW DUCT OPENING BETWEEN (E) 2X FRAMING AND (E) BLOCKING.
22. DOWNSIZE (E) OPENING WITH NEW 2X ROOF FRAMING AND 3/8" TREATED CDX PLYWOOD TO MATCH (E) SHEATHING.
23. 2X FRAMING, SEE S108.
24. (E) EXHAUST FAN TO REMAIN.

ZONE	LETTER	DESCRIPTION	DRAWN	DATE	APPRVD

REVISIONS

LICENSED ARCHITECT DAVID NORMAN CRAWFORD C24904 3/31/13 RENEWAL DATE STATE OF CALIFORNIA

DRAWN P.ALDEN	DATE	Ames Research Center Moffett Field, California
DESIGNED T.WONG	DATE	
CHECKED D.CRAWFORD	DATE	REPLACE ARC JET COMPLEX SVS BOILER ARCHITECTURAL
A&E PM G.HITE	DATE	
NASA PM W.LEE	DATE	OFFICE AND HIGHBAY ROOF PLAN
REQUESTER G.RAICHE	DATE	
R&QA	DATE	
SAFETY/PSM	DATE	
SUPERVISOR S. FRANKEL	DATE	

SIZE D | CAGE CODE 25307 | A 231-1300- A103 | REV

SCALE: As indicated | INDEX | SHEET | OF

FILE NAME: 60212932_SVS-Boiler Plant - Architecture.rvt 12/12/12

AECOM: 60212932.0001

C:\Users\wbonaldi\Documents\Revit\2011\60212932_SVS-Boiler Plant_Arch-CENTRAL_wbonaldi.rvt
1/29/2013 8:02:18 AM

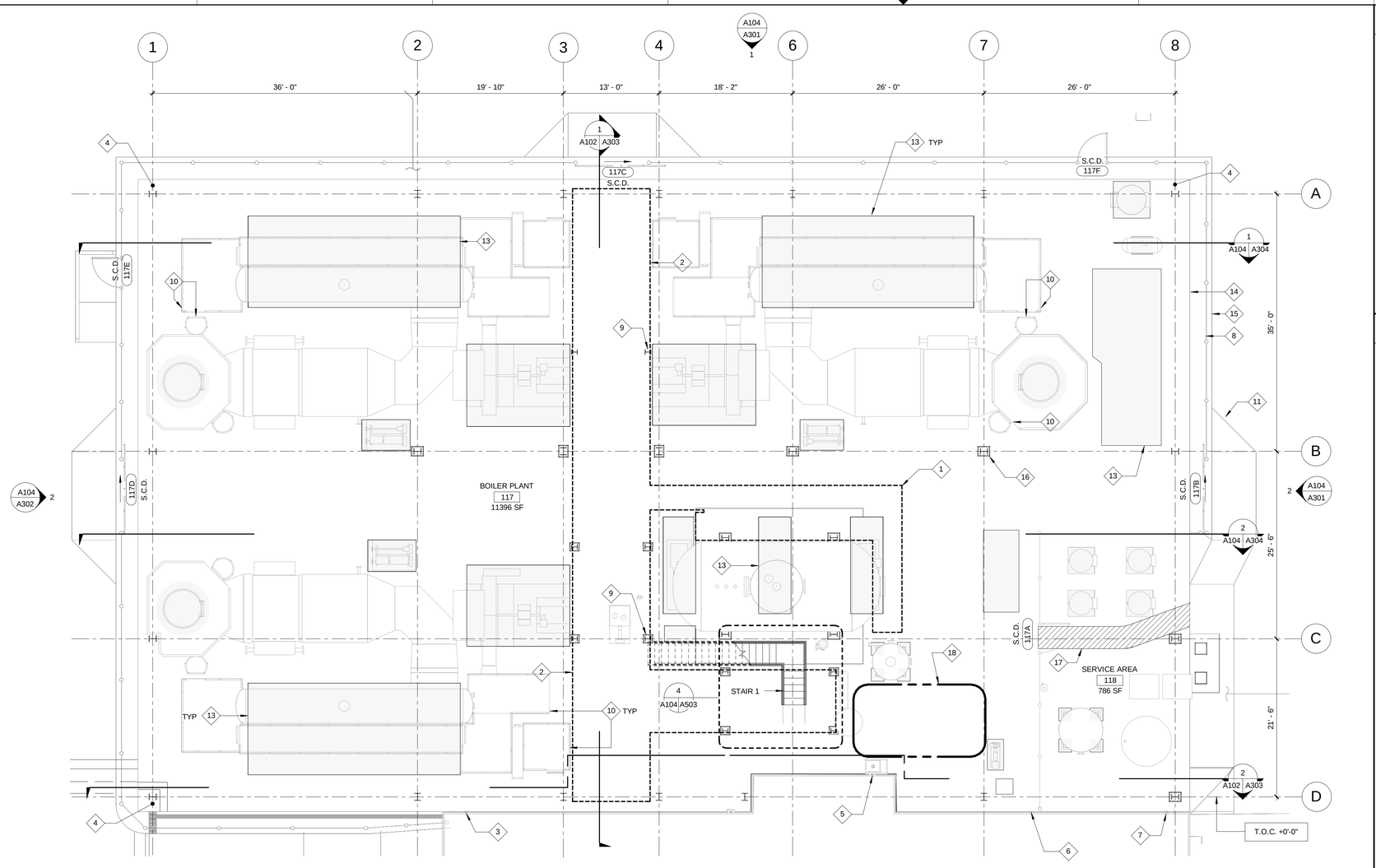

1 A002 A104 BOILER AREA PLAN
1/8" = 1'-0"

SCALE: 1/8" = 1'-0" (8' 4' 0' 8' 24')

SHEET NOTES

1. CONCRETE EQUIPMENT PADS ARE SHOWN ONLY FOR REFERENCE INFORMATION. REFER TO MECH AND ELEC DRAWINGS FOR REQUIREMENTS.

KEY NOTES

1. OUTLINE OF DEAERATOR LOWER PLATFORM, ABOVE.
2. OUTLINE OF WALKWAY, ABOVE.
3. RETROFIT (E) DOWNSPOUT INTO NEW CIVIL DRAIN PER CIVIL DRAWINGS.
4. DOWNSPOUT LOCATION, TIE TO STORM DRAIN CONNECTION PER CIVIL.
5. REFER TO A303. RE-ROUTE (E) DOWNSPOUT ALONG FACE OF BUILDING AND TIE TO (E) DOWNSPOUT AT NORTHWEST CORNER OF BUILDING.
6. REFER TO A303. RE-ROUTE (E) DOWNSPOUT, ABOVE, ALONG FACE OF BUILDING AND TIE TO (E) DOWNSPOUT AT NORTHEAST CORNER OF BUILDING.
7. COMBINE DOWNSPOUT FROM BUILDING N231 AND METAL CANOPY, FOR TIE INTO STORM DRAIN PER CIVIL.
8. CHAINLINK FENCE PER CIVIL.FENCE, SEE CIVIL DRAWINGS (S.C.D.).
9. MOUNT PORTABLE FIRE EXTINGUISHER ON NORTH FACE OF COLUMN +4'-0" AFF.
10. SAFETY CAGES, LADDERS AND COLUMNS ARE VENDOR PROVIDED EQUIPMENT AND SUBJECT TO CHANGE. INFORMATION IS SHOWN ONLY FOR CONCEPTUAL LAYOUT.
11. REFER TO CIVIL DRAWINGS FOR VEHICLE RAMP TO SLIDING GATES.
12. NOT USED.
13. SHADED AREAS INDICATE CONCRETE EQUIPMENT PADS, TYP. SEE STRUCTURAL DRAWINGS.
14. EDGE OF MAT SLAB, SEE STRUCTURAL DRAWINGS (S.S.D.).
15. EDGE OF FENCE FOOTING SLAB (S.C.D.).
16. STEEL COLUMN, TYPICAL, (S.S.D.).
17. MAINTAIN 3'-0" WIDE CLEAR EGRESS PATH.
18. ALTERNATE SERVICE AREA

ZONE	LETTER	DESCRIPTION	DRAWN	DATE	APPRVD

REVISIONS

DRAWN P.ALDEN	DATE	Ames Research Center Moffett Field, California
DESIGNED T.WONG	DATE	
CHECKED D.CRAWFORD	DATE	REPLACE ARC JET COMPLEX SVS BOILER ARCHITECTURAL
A&E PM G.HITE	DATE	
NASA PM W.LEE	DATE	BOILER AREA PLAN
REQUESTER G.RAICHE	DATE	
R&QA	DATE	SIZE D · CAGE CODE 25307 · A 231-1300- A104 · REV
SAFETY/PSM	DATE	SCALE: 1/8" = 1'-0" · INDEX · SHEET · OF
SUPERVISOR S. FRANKEL	DATE	

LICENSED ARCHITECT DAVID NORMAN CRAWFORD C24904 3/31/13 RENEWAL DATE STATE OF CALIFORNIA

FILE NAME: 60212932_SVS-Boiler Plant - Architecture.rvt 12/12/12

C:\Users\wbonald\Documents\Revit\2011\60212932_SVS-Boiler Plant_Arch-CENTRAL_wbonald.rvt
1/29/2013 8:02:29 AM

AECOM: 60212932.0001

DWG NO. **A231-1300- A105** | SH. | REV

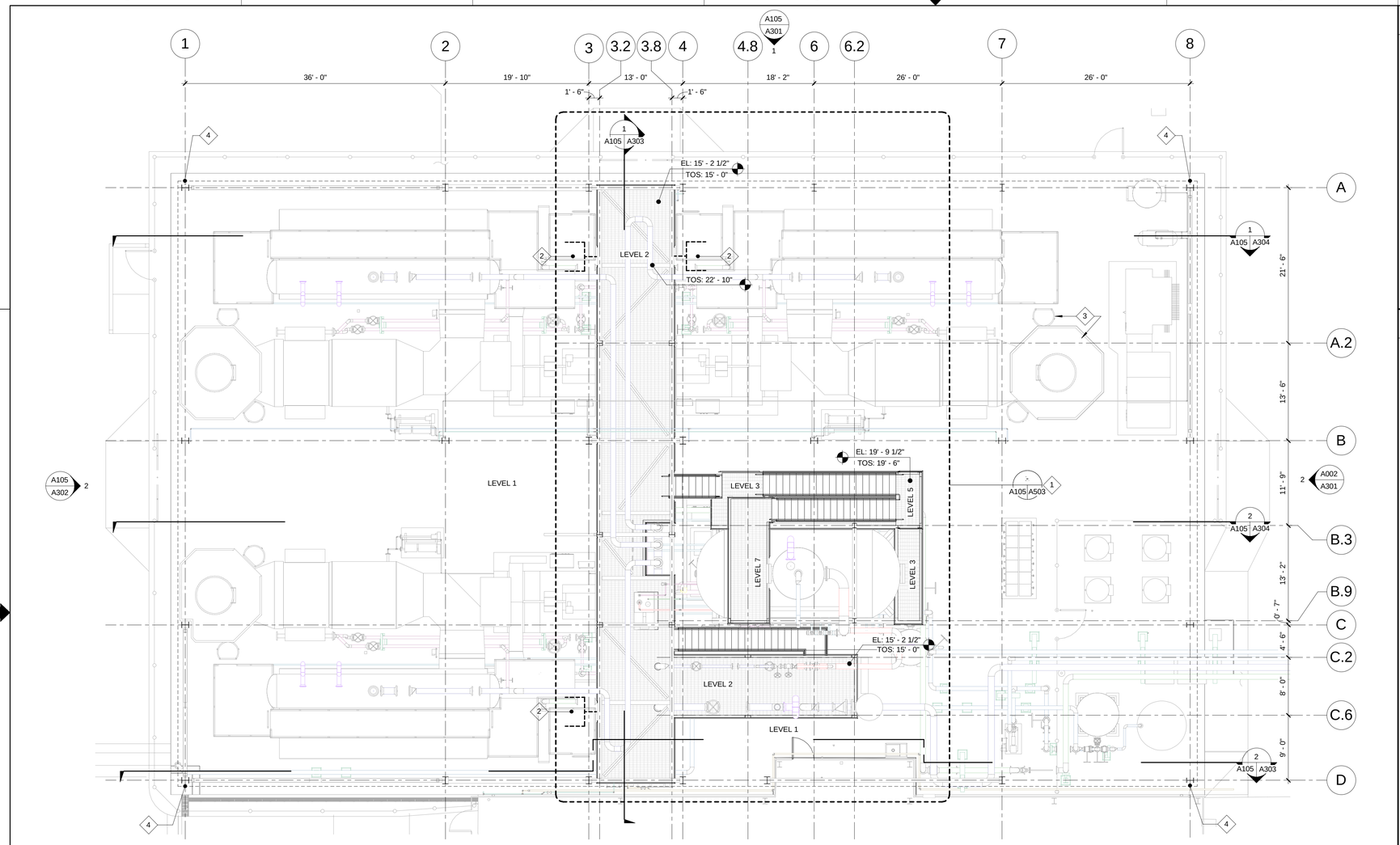

BOILER AREA WALKWAY AND PLATFORMS PLAN

1/8" = 1'-0"

SCALE: 1/8" = 1'-0"

SHEET NOTES

1. ALL WALKWAYS AND EQUIPMENT PLATFORMS SHALL BE IN ACCORDANCE WITH CBC 505.5.

KEY NOTES

1. FOR ADDITIONAL INFORMATION AND PLATFORM LEVELS AT HIGHER ELEVATIONS SEE 2, 3 & 4, SHEET A503.
2. DESIGN AND CONFIGURATION OF ADDITIONAL WALKWAYS AND STAIRS TO MAIN WALKWAY, TO BE BY BOILER MANUFACTURER.
3. ACCESS LADDER AND PLATFORM BY BOILER MANUFACTURER, TYP.
4. DOWNSPOUT LOCATION.

ZONE	LETTER	DESCRIPTION	DRAWN	DATE	Approver APPRVD

REVISIONS

DRAWN P.ALDEN	DATE	Ames Research Center Moffett Field, California
DESIGNED T.WONG	DATE	
CHECKED D.CRAWFORD	DATE	REPLACE ARC JET COMPLEX SVS BOILER ARCHITECTURAL
A&E PM G.HITE	DATE	BOILER AREA WALKWAY AND PLATFORMS PLAN
NASA PM W.LEE	DATE	
REQUESTER G.RAICHE	DATE	
R&QA	DATE	
SAFETY/PSM	DATE	SIZE D · CAGE CODE 25307 · A 231-1300- A105 · REV
SUPERVISOR S. FRANKEL	DATE	SCALE: 1/8" = 1'-0" · INDEX · SHEET · OF

LICENSED ARCHITECT DAVID NORMAN CRAWFORD C24904 3/31/13 RENEWAL DATE STATE OF CALIFORNIA

FILE NAME: 60212932_SVS-Boiler Plant - Architecture.rvt 12/12/12

AECOM: 60212932.0001

C:\Users\wbonald\Documents\Revit2011\60212932_SVS-Boiler Plant_Arch-CENTRAL_wbonald.rvt
1/29/2013 8:41:04 AM

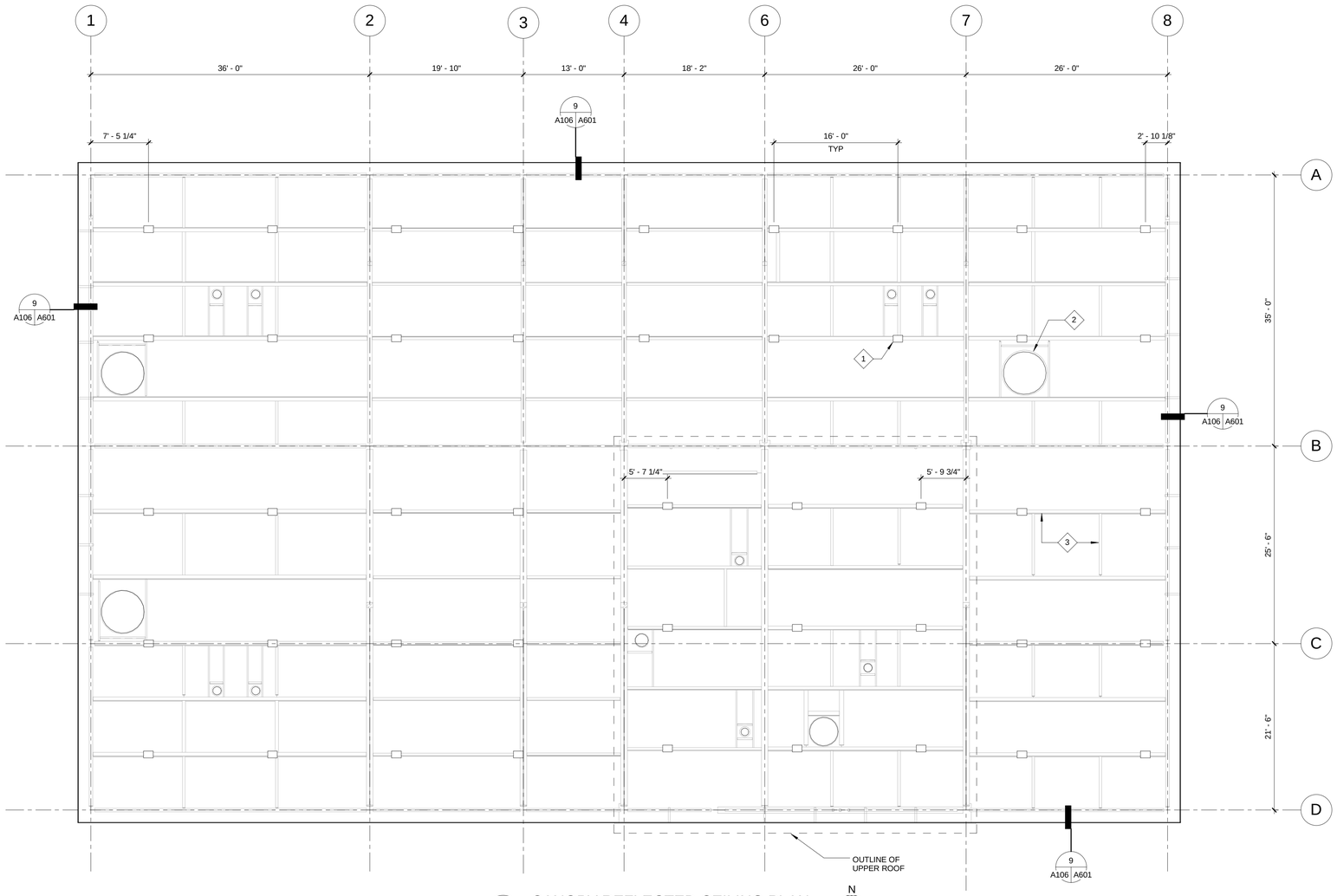

1 A002 A106 CANOPY REFLECTED CEILING PLAN 1/8" = 1'-0"

N

SCALE: 1/8" = 1'-0" 8' 4' 0' 8' 24'

KEY NOTES

1. LIGHT FIXTURE, TYP. SEE ELECTRICAL DRAWINGS.
2. INDICATES OPENING OF STUCTURAL DECK, TYP. SEE STRUCTURAL DRAWINGS.
3. INDICATES STRUCTURAL FRAMING MEMBERS, TYP. SEE STRUCTURAL DRAWINGS.

ZONE	LETTER	DESCRIPTION	DRAWN	DATE	Approver APPRVD

REVISIONS

DRAWN P.ALDEN	DATE	Ames Research Center Moffett Field, California
DESIGNED T.WONG	DATE	
CHECKED D.CRAWFORD	DATE	REPLACE ARC JET COMPLEX SVS BOILER ARCHITECTURAL
A&E PM G.HITE	DATE	
NASA PM W.LEE	DATE	CANOPY REFLECTED CEILING PLAN
REQUESTER G.RAICHE	DATE	
R&QA	DATE	SIZE D / CAGE CODE 25307 / A 231-1300- A106 / REV
SAFETY/PSM	DATE	SCALE: 1/8" = 1'-0" / INDEX / SHEET / OF
SUPERVISOR S. FRANKEL	DATE	

LICENSED ARCHITECT DAVID NORMAN CRAWFORD C24904 3/31/13 RENEWAL DATE STATE OF CALIFORNIA

FILE NAME: 60212932_SVS-Boiler Plant - Architecture.rvt 12/12/12

AECOM: 60212932.0001

C:\Users\wbonald\Documents\Revit2011\60212932_SVS-Boiler Plant_Arch-CENTRAL_wbonald.rvt
1/29/2013 8:41:06 AM

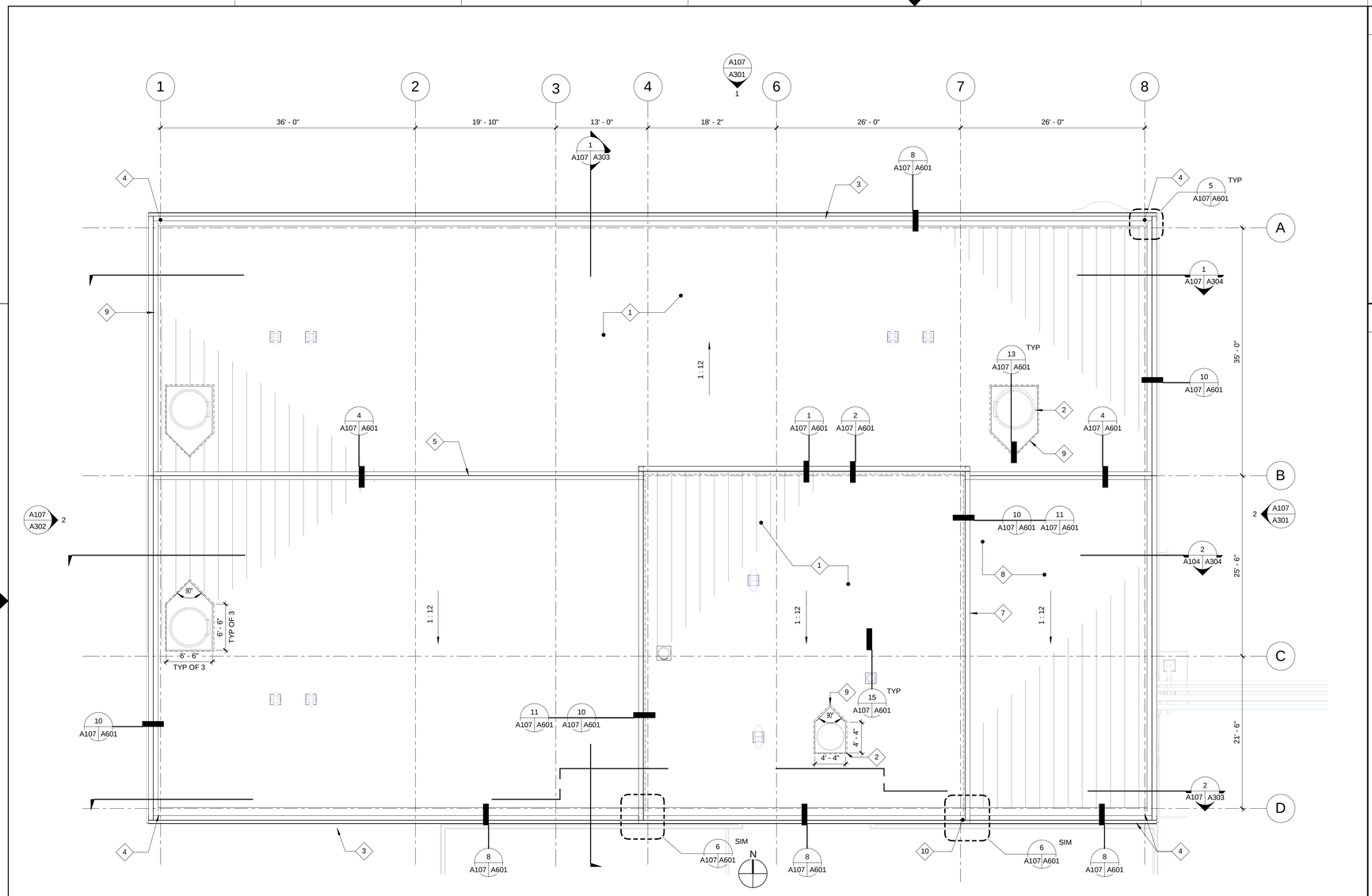

1 A002 | A107 CANOPY ROOF PLAN
1/8" = 1'-0"

SCALE: 1/8" = 1'-0" 8' 4' 0' 8' 24'

SHEET NOTES

1. REFER TO A103 FOR LOCATIONS OF (E) DOWNSPOUTS AND OVERFLOW SCUPPERS AT ROOF OF BUILDING N231.
2. ◯ INDICATES FLUE, VENT OR PIPE PENETRATION PER MECH. ACTUAL SIZE AND LOCATION MAY VARY PER MANUFACTURER. PROVIDE 12"X12" CANOPY OPENING, FLASHING AND SHEET METAL UMBRELLA PER 13/A601, TYP.

KEY NOTES

1. ARCHITECTURAL CANOPY COVER TO CONSIST OF PBU METAL PANELS, WITH 'KYNAR 500' FINISH. CANOPY AT 1:12 SLOPE WITH EXPOSED FASTENERS.
2. PENTAGONAL SHAPED OPENING AT ARCHITECTURAL METAL ROOF PANEL. FOR FLASHING, SEE 13/A601.
3. EAVE GUTTER.
4. DOWNSPOUT LOCATION. SEE DRAWING C103.
5. ROOF RIDGE.
6. NOT USED.
7. UPPER CANOPY ROOF.
8. LOWER CANOPY ROOF OUTLINE.
9. OUTLINE OF EXHAUST STACK OR SILENCER COUNTERFLASHING.
10. UPPER DOWNSPOUT DISCHARGE TO LOWER LOWER GUTTER BELOW.

ZONE	LETTER	DESCRIPTION	DRAWN	DATE	APPRVD

REVISIONS

DRAWN P.ALDEN	DATE	Ames Research Center Moffett Field, California
DESIGNED T.WONG	DATE	
CHECKED D.CRAWFORD	DATE	REPLACE ARC JET COMPLEX SVS BOILER ARCHITECTURAL
A&E PM G.HITE	DATE	
NASA PM W.LEE	DATE	CANOPY ROOF PLAN
REQUESTER G.RAICHE	DATE	
R&QA	DATE	SIZE D · CAGE CODE 25307 · A 231-1300- A107 · REV
SAFETY/PSM	DATE	SCALE: 1/8" = 1'-0" · INDEX · SHEET · OF
SUPERVISOR S. FRANKEL	DATE	

LICENSED ARCHITECT DAVID NORMAN CRAWFORD C24904 3/31/13 RENEWAL DATE STATE OF CALIFORNIA

FILE NAME: 60212932_SVS-Boiler Plant - Architecture.rvt 12/12/12

C:\Users\wbonaldi\Documents\Revit\2011\60212932_SVS-Boiler Plant_Arch-CENTRAL_wbonaldi.rvt
1/29/2013 8:02:35 AM

AECOM: 60212932.0001

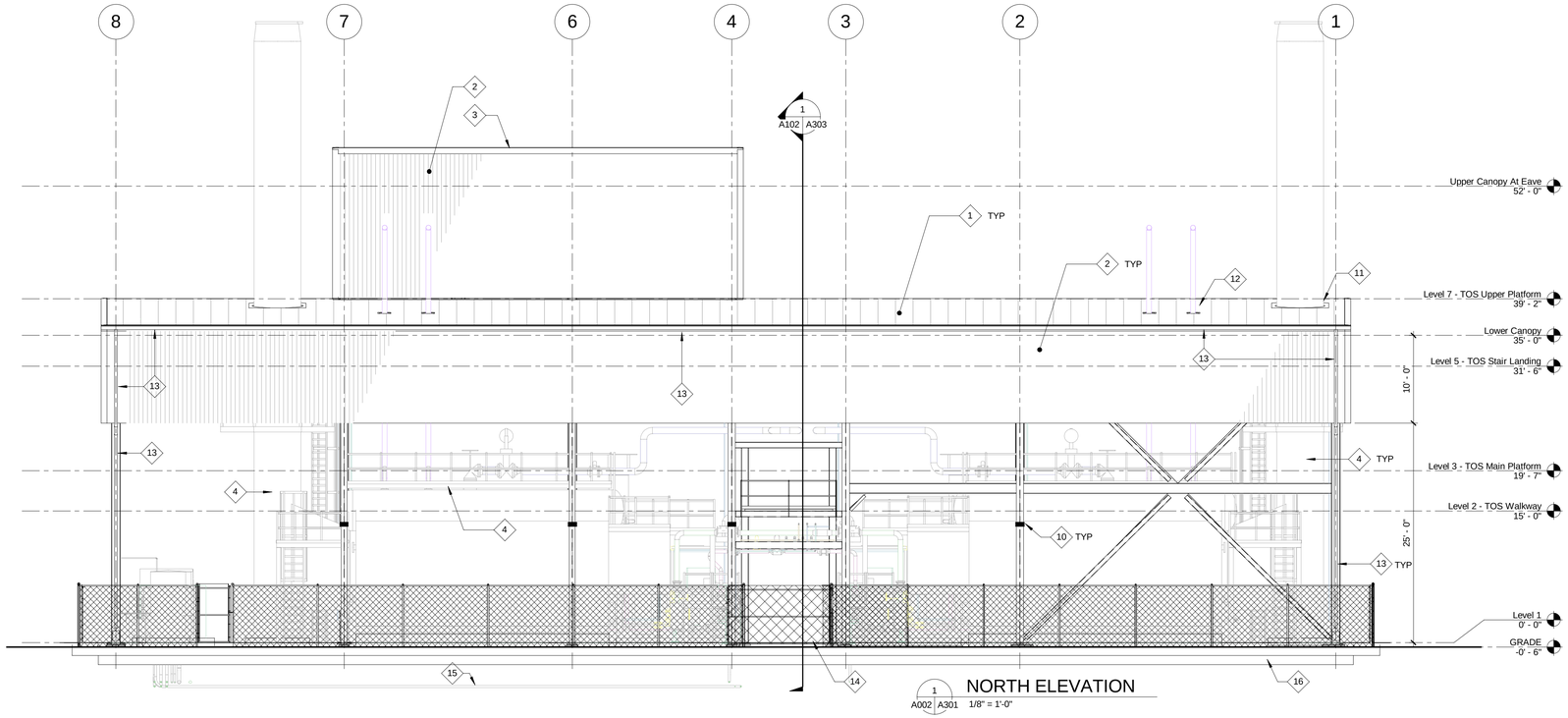

NORTH ELEVATION

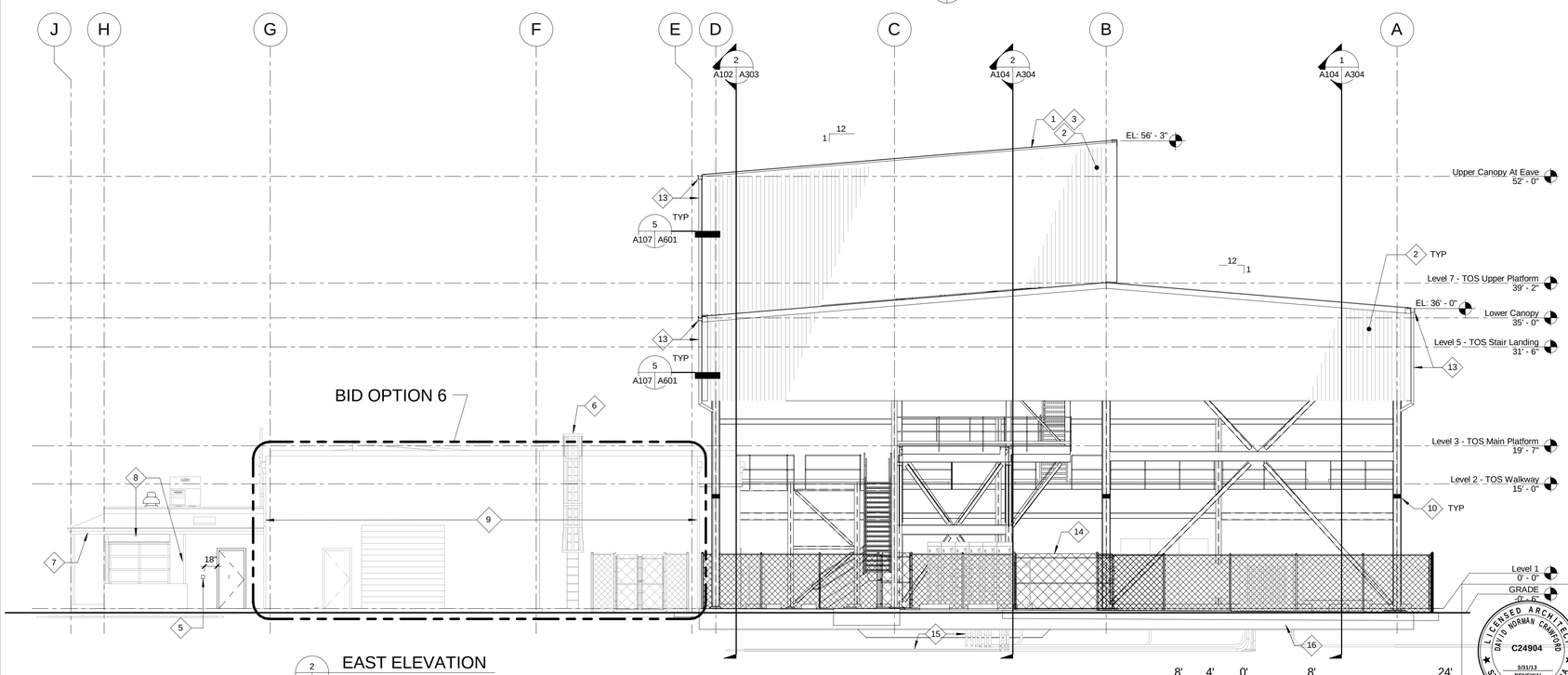

EAST ELEVATION

SCALE: 1/8" = 1'-0"

SHEET NOTES

1. INDICATES LIGHT FIXTURE MOUNTED ON COLUMN. CENTER OF FIXTURE +14'-0" AFF.
2. SEE SHEET G006 FOR A MORE COMPLETE DESCRIPTION OF EACH BID OPTION.

KEY NOTES

1. METAL PBU PANEL OVER STRUCTURAL METAL DECK, TYP.
2. METAL PBU PANEL SIDE SKIRTS WITH KYNAR 500 FINISH. TYPICAL.
3. HIGH CANOPY OVER DEAREATOR AREA, BEYOND.
4. ADDITIONAL LADDERS, WALKWAYS, PLATFORM, STAIRS AND RAILINGS BY BOILER AND DEAREATOR EQUIPMENT MANUFACTURER, TYP.
5. NEW CARD READER, LOCATE CENTER +36" AFF AND MIN OF 18" FROM DOOR. MOUNT TO OUTER FACE OF (E) METAL SIDING.
6. (E) LADDER TO ROOF OF N231.
7. CLEAN AND PREP FOR REPAINTING UNDERSIDE OF (E) METAL MANSARD ROOF AND ASSOCIATED SHEET METAL TRIM AND GUTTERS, REMOVE ALL LOOSE SEALANT AND RE-SEAL. AT MANSARD BOTTOM LOCATIONS WITH EXCESSIVE RUSTING, PROVIDE SHEET METAL COVER WITH SHEET METAL SCREENS. PRIME AND PREPAINT. TYPICAL.
8. REPAINT (E) PIPE COLUMNS AND (E) 14GA SHEET METAL TRIM, TYP.
9. (BID OPTION 6) REPAINT (E) METAL SIDING, HOLLOW METAL DOOR AND FRAME, (E) METAL SIDING, HOLLOW METAL DOOR AND FRAME, AND (E) OVERHEAD COILING DOOR AT EAST ELEVATION. DO NOT PAINT ROOF ACCESS LADDER, LIGHT FIXTURES, HORN, SIGNS, STROBES OR OTHER WALL MOUNTED ANCILLARY EQUIPMENT.
10. LIGHT FIXTURE, TYP, CENTER OF FIXTURE +14'-0" AFF.
11. EXHAUST STACK FLASHING, SEE 13/A601.
12. VENT FLASHING, SEE 13/A601.
13. GUTTER AND DOWNSPOUT.
14. SLIDING GATE PER CIVIL.
15. BELOW GRADE UTILITIES, SHOWN FOR GENERAL INFORMATION ONLY.
16. STRUCTURAL MAT SLAB.

ZONE	LETTER	DESCRIPTION	DRAWN	DATE	Approver APPRVD

REVISIONS

DRAWN P.ALDEN	DATE	Ames Research Center Moffett Field, California
DESIGNED T.WONG	DATE	
CHECKED D.CRAWFORD	DATE	REPLACE ARC JET COMPLEX SVS BOILER ARCHITECTURAL
A&E PM G.HITE	DATE	
NASA PM W.LEE	DATE	EXTERIOR ELEVATIONS
REQUESTER G.RAICHE	DATE	
R&QA	DATE	
SAFETY/PSM	DATE	
SUPERVISOR S. FRANKEL	DATE	

SIZE D | CAGE CODE 25307 | A 231-1300- A301 | REV

SCALE: 1/8" = 1'-0" | INDEX | SHEET | OF

FILE NAME: 60212932_SVS-Boiler Plant - Architecture.rvt 12/12/12

LICENSED ARCHITECT DAVID NORMAN CRAWFORD C24904 3/31/13 RENEWAL DATE STATE OF CALIFORNIA

C:\Users\wbonaldi\Documents\Revit2011\60212932_SVS-Boiler Plant_Arch-CENTRAL_wbonaldi.rvt
1/29/2013 8:02:42 AM

AECOM: 60212932.0001

DWG NO. **A231-1300- A302** | SH. | REV

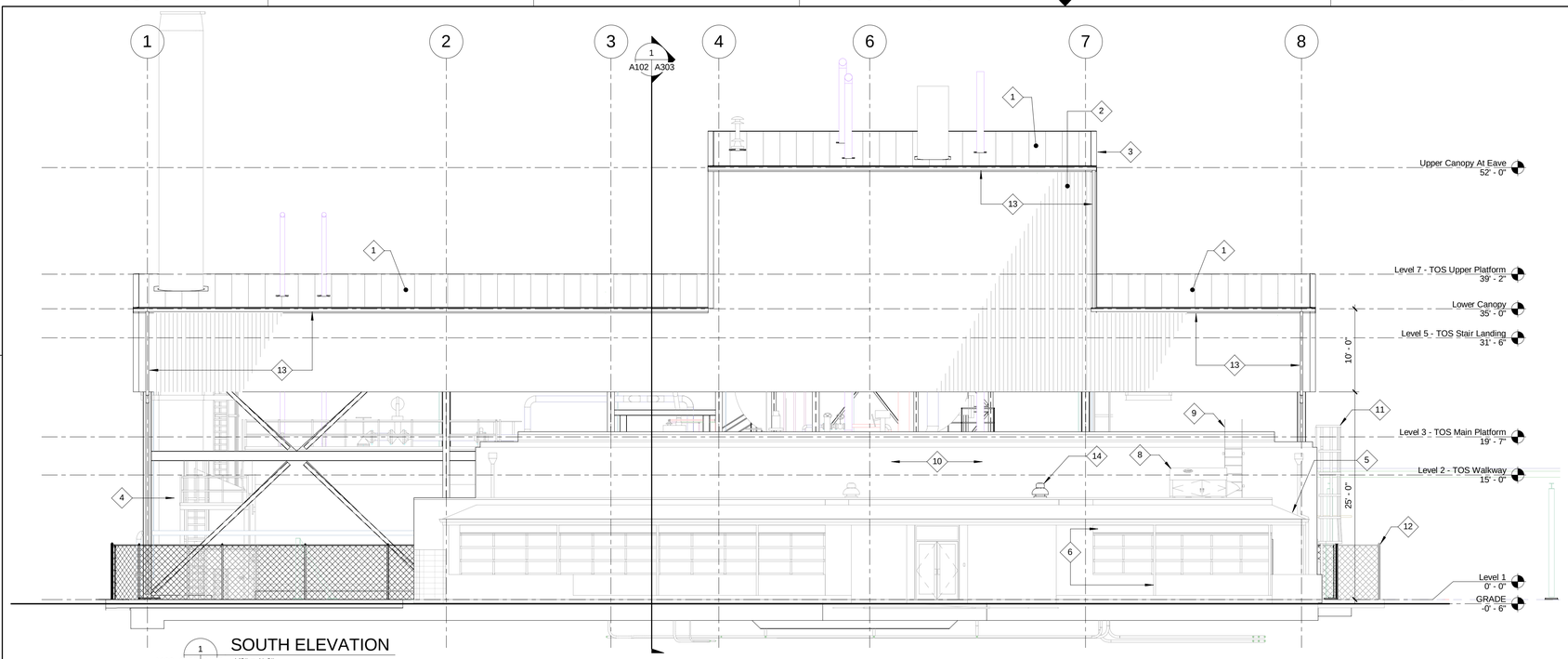

1 A102, A002 | A302 SOUTH ELEVATION 1/8" = 1'-0"

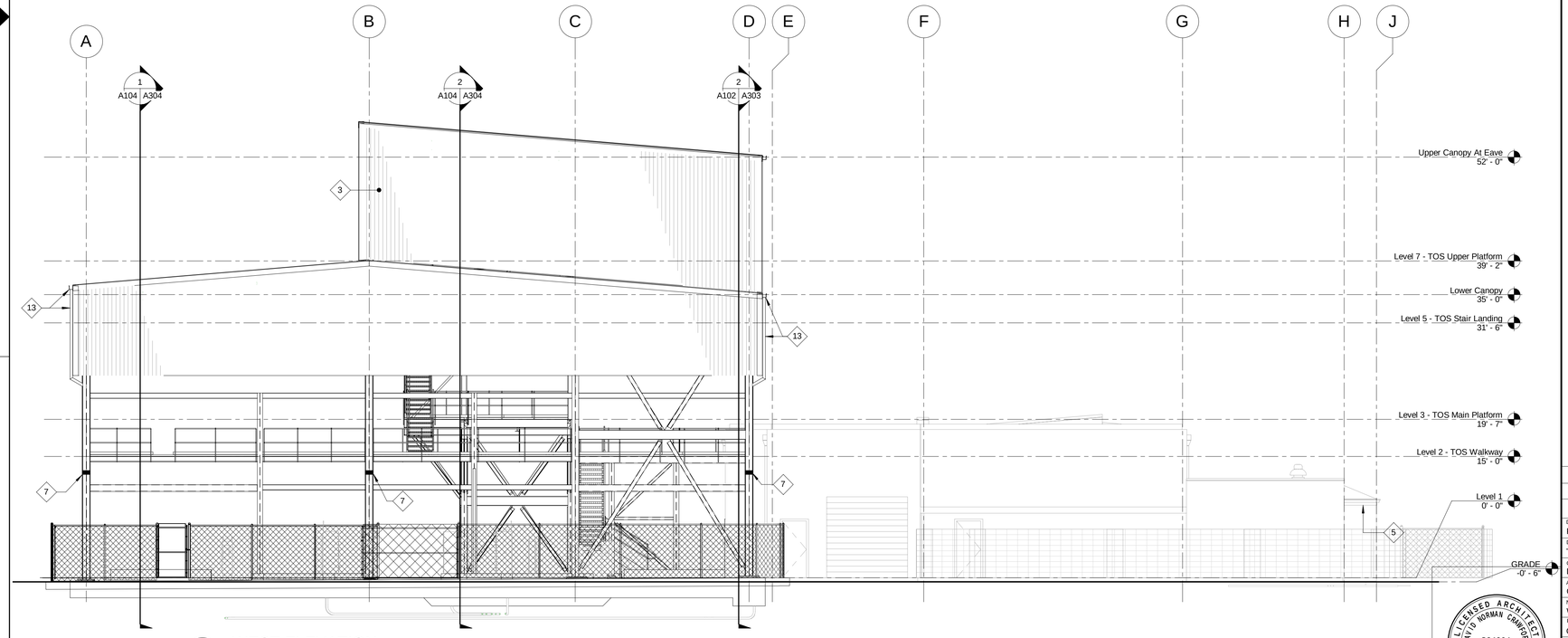

2 A002 | A302 WEST ELEVATION 1/8" = 1'-0"

SCALE: 1/8" = 1'-0" 8' 4' 0' 8' 24'

KEY NOTES

1. METAL PBU PANEL OVER STRUCTURAL METAL DECK, TYP.
2. METAL PBU DECK SIDE SKIRTS WITH KYNAR 500 FINISH, TYP.
3. HIGH CANOPY OVER DEAREATOR AREA.
4. ADDITIONAL LADDERS, WALKWAYS, PLATFORM, STAIRS AND RAILINGS BY BOILER AND DEAREATOR EQUIPMENT MANUFACTURER, TYP.
5. CLEAN AND PREP FOR REPAINTING UNDERSIDE OF (E) METAL MANSARD ROOF AND ASSOCIATED SHEET METAL TRIM AND GUTTERS, REMOVE ALL LOOSE SEALANT AND RE-SEAL. AT MANSARD BOTTOM LOCATIONS WITH EXCESSIVE RUSTING, PROVIDE SHEET METAL COVER WITH SHEET METAL SCREENS. PRIME AND PREPAINT.
6. REPAINT (E) PIPE COLUMNS AND (E) 14GA SHEET METAL TRIM, TYP.
7. INDICATES LIGHT FIXTURE MOUNTED ON COLUMN. CENTER OF FIXTURE +14'-0" AFF.
8. REPLACEMENT HVAC UNIT. SEE MECHANICAL.
9. (E) ROOF LADDER FROM HIGH BAY.
10. (E) METAL SIDING.
11. (E) ROOF LADDER.
12. (E) CHAIN LINK ENCLOSURE.
13. GUTTER AND DOWNSPOUT.
14. EXHAUST FAN, SEE MECHANICAL.

ZONE	LETTER	DESCRIPTION	DRAWN	DATE	Approver APPRVD

REVISIONS

DRAWN P.ALDEN	DATE	Ames Research Center Moffett Field, California
DESIGNED T.WONG	DATE	
CHECKED D.CRAWFORD	DATE	REPLACE ARC JET COMPLEX SVS BOILER ARCHITECTURAL
A&E PM G.HITE	DATE	
NASA PM W.LEE	DATE	EXTERIOR ELEVATIONS
REQUESTER G.RAICHE	DATE	
R&QA	DATE	
SAFETY/PSM	DATE	SIZE D · CAGE CODE 25307 · A 231-1300- A302 · REV
SUPERVISOR S. FRANKEL	DATE	SCALE: 1/8" = 1'-0" · INDEX · SHEET · OF

LICENSED ARCHITECT DAVID NORMAN CRAWFORD C24904 3/31/13 RENEWAL DATE STATE OF CALIFORNIA

FILE NAME: 60212932_SVS-Boiler Plant - Architecture.rvt 12/12/12

C:\Users\rschaefl1\Documents\Revit\2011\60212932_SVS-Boiler Plant_Arch-CENTRAL_palden.rvt
1/30/2013 8:39:54 AM

AECOM: 60212932.0001

DWG NO. **A231-1300- A303** | SH. | REV

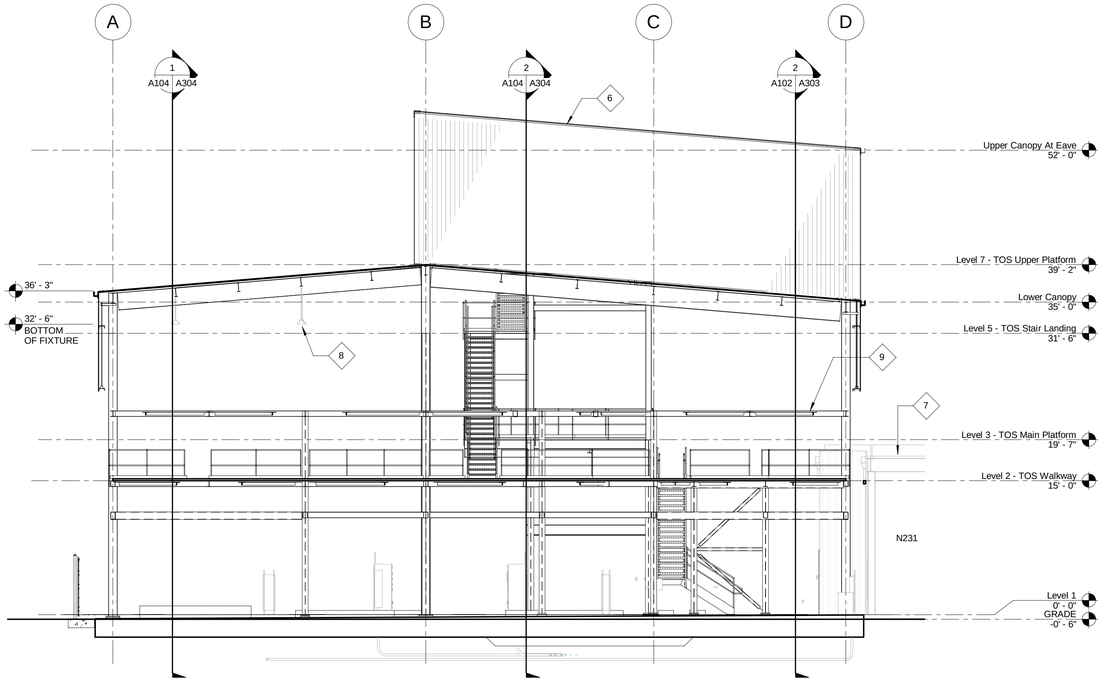

1 A102 A303 SECTION AT GRID LINE 4
1/8" = 1'-0"

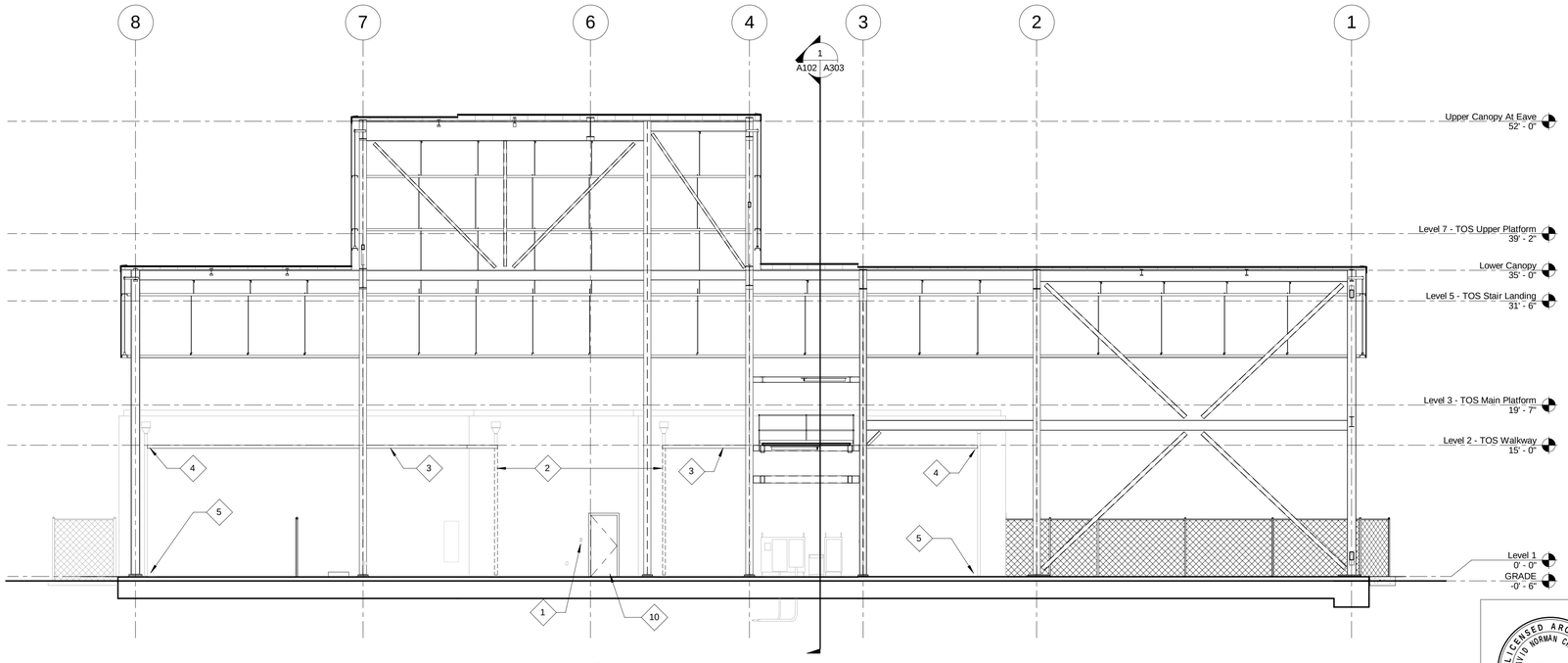

2 A102 A303 SECTION AT GRID LINE D
1/8" = 1'-0"

SCALE: 1/8" = 1'-0" 8' 4' 0' 8' 24'

KEY NOTES

1. MOUNT NEW CARD READER + 36" AFF.
2. DEMO (E) DOWNSPOUT AS SHOWN.
3. PROVIDE NEW DOWNSPOUT AND CONNECT TO (E) CONDUCTOR HEAD. SLOPE AT MIN 1% AND CONNECT TO REPLACEMENT DOWNSPOUT.
4. REPLACE (E) DOWNSPOUT AS NEEDED FOR CONNECTION TO NEW DOWNSPOUT SECTION.
5. CONNECT DOWNSPOUT TO NEW RAIN GUTTER THROUGH MAT SLAB PER CIVIL.
6. HIGH CANOPY AREA, BEYOND.
7. ROOF OF BUILDING N231.
8. LIGHT FIXTURE, TYP. SEE ELECTRICAL.
9. OVERHEAD PIPING SUPPORT STRUCTURE.
10. DOOR TO N231 HIGH BAY.

ZONE	LETTER	DESCRIPTION	DRAWN	DATE	Approver APPRVD

REVISIONS

LICENSED ARCHITECT DAVID NORMAN CRAWFORD C24904 3/31/13 RENEWAL DATE STATE OF CALIFORNIA

DRAWN	P.ALDEN	DATE
DESIGNED	T.WONG	DATE
CHECKED	D.CRAWFORD	DATE
A&E PM	G.HITE	DATE
NASA PM	W.LEE	DATE
REQUESTER	G.RAICHE	DATE
R&QA		DATE
SAFETY/PSM		DATE
SUPERVISOR	S. FRANKEL	DATE

Ames Research Center
Moffett Field, California

REPLACE ARC JET COMPLEX SVS BOILER
ARCHITECTURAL

CANOPY SECTIONS

SIZE	CAGE CODE		REV
D	25307	A 231-1300- A303	
SCALE: 1/8" = 1'-0"	INDEX	SHEET	OF

FILE NAME: 60212932_SVS-Boiler Plant - Architecture.rvt 12/12/12

C:\Users\wbonald\Documents\Revit2011\60212932_SVS-Boiler Plant_Arch-CENTRAL_wbonald.rvt
1/29/2013 8:02:54 AM

AECOM: 60212932.0001

DWG NO. **A231-1300- A304** | SH. | REV

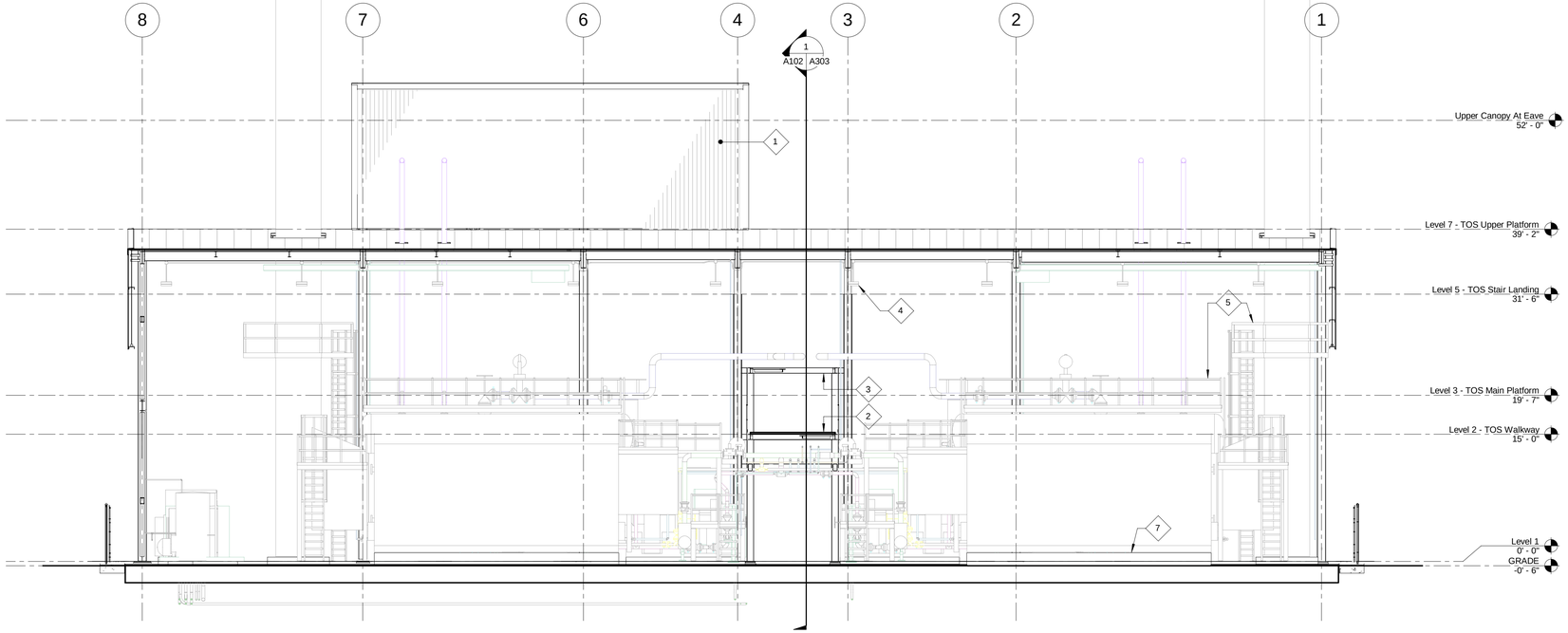

1 A104 A304 SECTION AT GRID LINE A 1/8" = 1'-0"

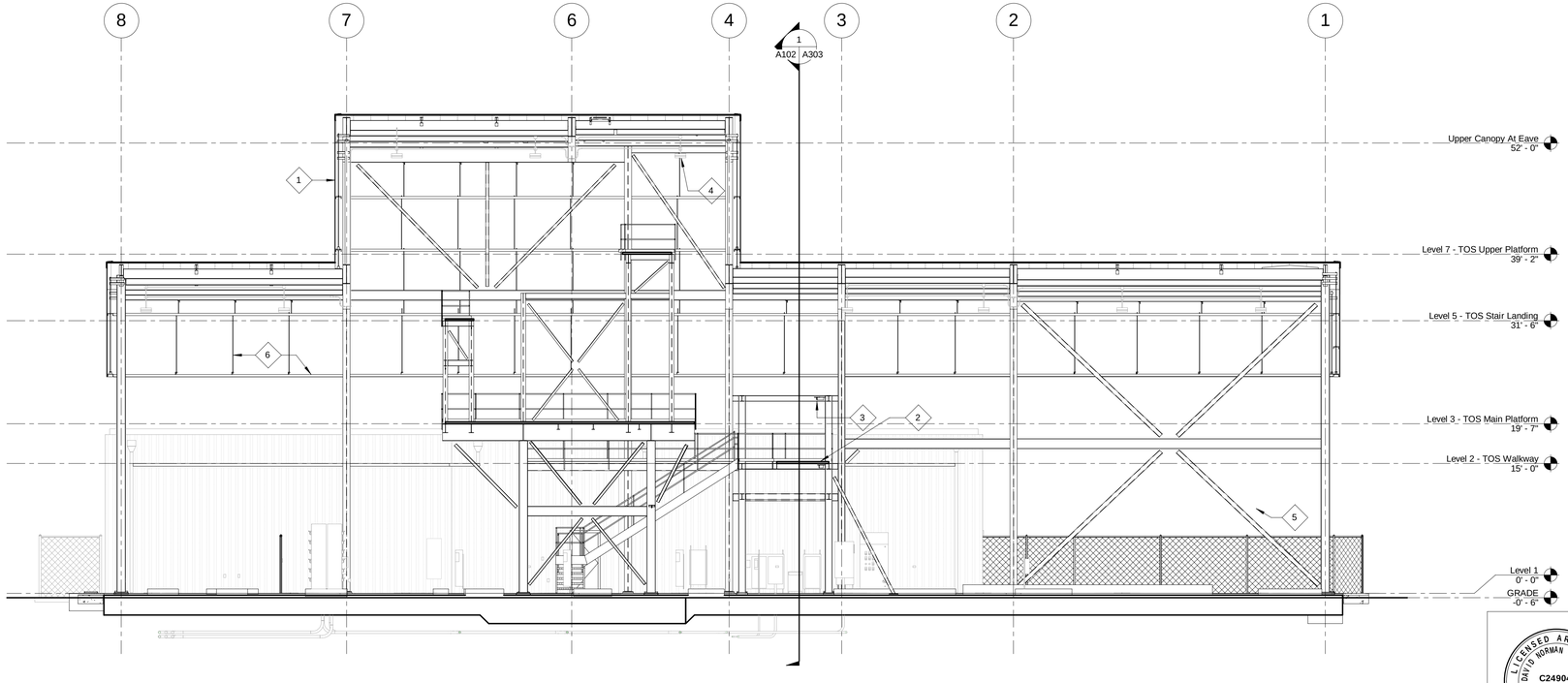

2 A104 A304 SECTION AT GRID LINE B 1/8" = 1'-0"

SCALE: 1/8" = 1'-0" 8' 4' 0' 8' 24'

LICENSED ARCHITECT DAVID NORMAN CRAWFORD C24904 3/31/13 RENEWAL DATE STATE OF CALIFORNIA

KEY NOTES

1. HIGH CANOPY AT DEAREATOR AREA.
2. WALKWAY LEVEL.
3. OVERHEAD PIPE SUPPORT PER STRUCTURAL.
4. LIGHT FIXTURE, TYP. SEE ELECTRICAL DRAWINGS.
5. ADDITIONAL LADDERS, WALKWAYS, PLATFORMS, STAIRS AND RAILINGS BY BOILER AND DEAREATOR EQUIPMENT MANUFACTURER. LAYOUT SHOWN IS FOR GENERAL INFORMATION AND MAY VARY WITH MANUFACTURER, TYP.
6. REFER TO STRUCTURAL FOR METAL PANEL SIDE SKIRT GIRT AND HANGER ROD, TYP.
7. CONCRETE EQUIPMENT PAD, TYP.

ZONE	LETTER	DESCRIPTION	DRAWN	DATE	Approver APPRVD

REVISIONS

DRAWN P.ALDEN	DATE	Ames Research Center Moffett Field, California
DESIGNED T.WONG	DATE	
CHECKED D.CRAWFORD	DATE	REPLACE ARC JET COMPLEX SVS BOILER ARCHITECTURAL
A&E PM G.HITE	DATE	
NASA PM W.LEE	DATE	CANOPY SECTIONS
REQUESTER G.RAICHE	DATE	
R&QA	DATE	
SAFETY/PSM	DATE	
SUPERVISOR S. FRANKEL	DATE	

SIZE	CAGE CODE		REV
D	25307	A 231-1300- A304	
SCALE: 1/8" = 1'-0"		INDEX	SHEET OF

FILE NAME: 60212932_SVS-Boiler Plant - Architecture.rvt 12/12/12

AECOM: 60212932.0001

C:\Users\wbonaldi\Documents\Revit\2011\60212932_SVS-Boiler Plant_Arch-CENTRAL_wbonaldi.rvt
1/29/2013 8:03:02 AM

DWG NO. **A231-1300- A501** | SH. | REV.

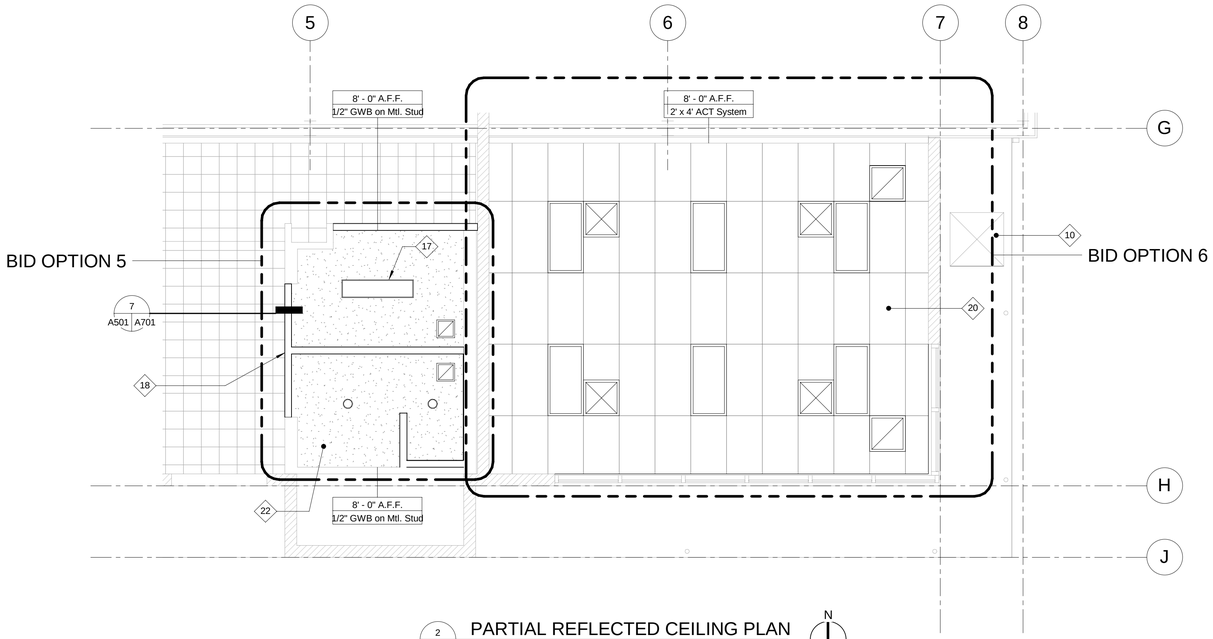

2 A102 A501 PARTIAL REFLECTED CEILING PLAN 1/4" = 1'-0"

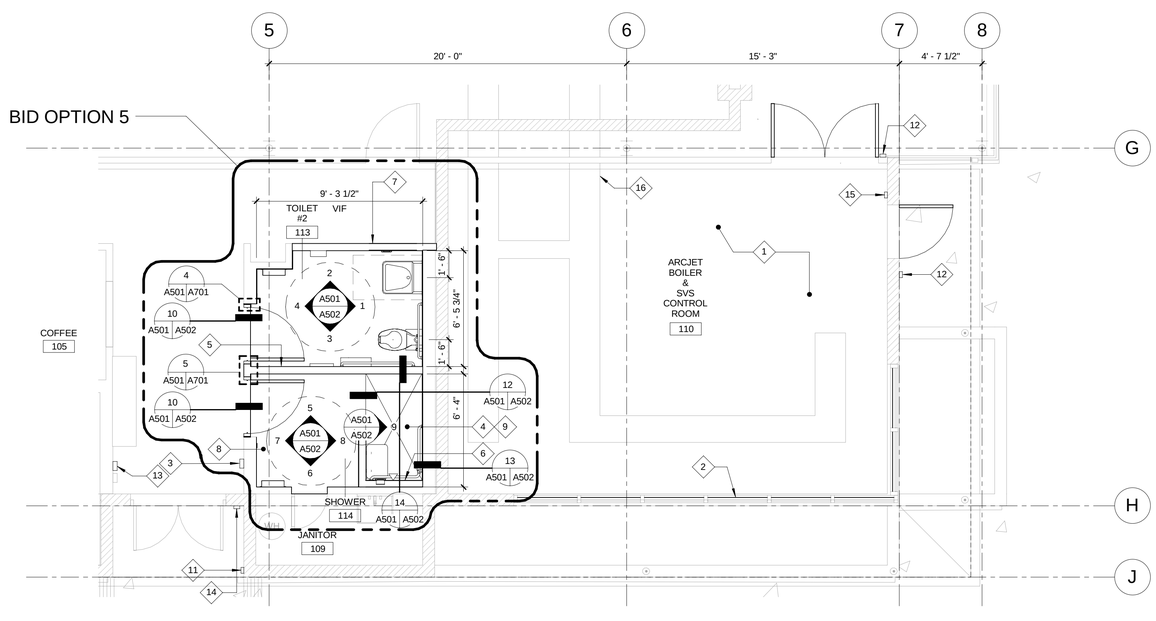

1 A102 A501 PARTIAL FLOOR PLAN 1/4" = 1'-0"

SCALE: 1/4" = 1'-0"

SHEET NOTES

1. SEE SHEET G006 FOR A MORE COMPLETE DESCRIPTION OF EACH BID OPTION.

ROOM FINISH NOTES

1. ROOM 110
   FLOOR: VCT, 12" SQUARE
   BASE: 4" RUBBER
   WALLS: PAINT (EGGSHELL) OVER GYP OR CMU
2. ROOM 113
   FLOOR: SHEET VINYL
   BASE: INTEGRAL COVE TO SHEET VINYL
   WALLS: PAINT (EGGSHELL) OVER GYP FRP PER INTERIOR ELEVATIONS
3. ROOM 114
   FLOOR: 12"X12" PORCELAIN TILE
   BASE: 6"X12" COVED PORCELAIN TILE
   WALLS: CERAMIC TILE PER INTERIOR ELEVATIONS FOR SHOWER AREA

KEY NOTES

1. PROVIDE NEW VCT FLOORING AND ALIGN WITH TOP OF EXISTING FLAT BAR AT EDGE OF EXISTING TRENCHES. PROVIDE NEW 4" HIGH RUBBER BASE THROUGHOUT ROOM 110.
2. PROVIDE (N) WINDOW BLINDS AT (E) WINDOWS, TYP.
3. (E) VARIOUS WALL MOUNTED DOOR CONTROL AND EMERGENCY SHUT-OFF BUTTON TO REMAIN. VERIFY LOCATION OF CONDUIT WITHIN WALL PRIOR TO DEMOLITION FOR NEW DOOR OPENING.
4. PROVIDE (N) CEMENTITIOUS BOARD OVER (E) WALL AND CONTINUE TILE WALL SURROUNDING SHOWER TO BOTTOM OF NEW CEILING.
5. (N) WALLS TO BE 3 5/8" METAL STUDS AT 16" OC WITH 1/2" GWB BOTH SIDES. AT SIDE RECEIVING CERAMIC TILE, REPLACE WITH 1/2" CEMENTITIOUS BOARD.
6. PROVIDE (N) FURRED WALL OF 1/2" CEMENTITIOUS BOARD OVER 3 5/8" METAL STUD AT 16" OC. SET INSIDE FACE OF STUD 1/2" CLEAR FROM FACE OF (E) WALL.
7. INFILL OPENING WITH 3 1/2" METAL STUDS AT MAX 16" OC WITH 1/2" GWB EACH SIDE TO MATCH (E) CONSTRUCTION.
8. THIN SET CERAMIC TILE FLOOR OVER (E) CONC, PROVIDE COVED TILE BASE.
9. SAWCUT AND REPLACE (E) CONCRETE FLOOR FOR NEW SHOWER W/ 5" CONCRETE SLAB W/#4 BARS AT 12" OC EACH WAY, SEE 12/13/A502. PROVIDE WITH 1% SLOPE TO SHOWER DRAIN.
10. (E) OPENING IN (E) MANSARD ROOF.
11. LOCATION OF (N) CARD READER.
12. MOUNT NEW CARD READER +36".
13. MOUNT NEW ACCESSIBLE PUSH PLATE +36" AFF.
14. REPLACE (E) CARD READER, SEE KEY NOTE 11.
15. RE-INSTALL FIRE EXTINGUISHER BELOW (E) CONTROL PANEL.
16. (E) FLOOR TRENCH W/METAL TRENCH COVER PLATE ONLY REPLACE WITH MATCHING TYPE IF COVER CONTAINS A HOLE OF 4"X4" OR GREATER CUT-OUT THAT IS NOT USED FOR PASSAGE OF CONDUIT CABLING OR EQUIPMENT.
17. CENTER LIGHT FIXTURE WITHIN ROOM.
18. PROVIDE NEW 2X2 CEILING TILE TO MATCH (E) AS REQUIRED.
19. NOT USED.
20. CEILING LAYOUT IS BASED ON REPLACEMENT ROOF TOP HVAC UNIT AND DUCTWORK/DIFFUSERS. IF BID OPTION 6 IS ADOPTED, REPOSITION NEW CEILING GRID TO INCORPORATE (E) MECH DUCTWORK AND CEILING ELEMENTS IN SAME LOCATION.
21. RELOCATED MAIL STOP CASEWORK.
22. MOISTURE RESISTANT GYPSUM BOARD CEILING.

ZONE	LETTER	DESCRIPTION	DRAWN	DATE	Approver APPRVD

REVISIONS

DRAWN P.ALDEN	DATE	Ames Research Center Moffett Field, California
DESIGNED T.WONG	DATE	
CHECKED D.CRAWFORD	DATE	REPLACE ARC JET COMPLEX SVS BOILER ARCHITECTURAL
A&E PM G.HITE	DATE	
NASA PM W.LEE	DATE	OFFICE AND HIGHBAY PARTIAL FLOOR PLANS
REQUESTER G.RAICHE	DATE	
R&QA	DATE	
SAFETY/PSM	DATE	
SUPERVISOR S. FRANKEL	DATE	

SIZE D | CAGE CODE 25307 | A 231-1300- A501 | REV

SCALE: 1/4" = 1'-0" | INDEX | SHEET | OF

FILE NAME: 60212932_SVS-Boiler Plant - Architecture.rvt 12/12/12

LICENSED ARCHITECT DAVID NORMAN CRAWFORD C24904 3/31/13 RENEWAL DATE STATE OF CALIFORNIA

AECOM: 60212932.0001

C:\Users\wbonaldi\Documents\Revit\2011\60212932_SVS-Boiler Plant_Arch-CENTRAL_wbonaldi.rvt
1/29/2013 8:03:04 AM

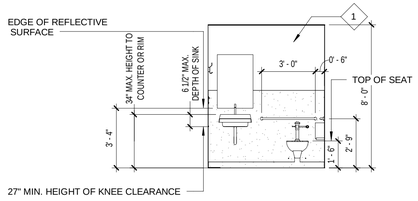

1 A501 A502 ROOM 113 - EAST ELEVATION
1/4" = 1'-0"

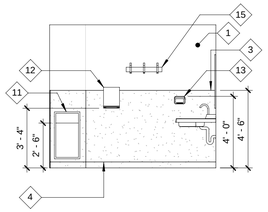

2 A501 A502 ROOM 113 - NORTH ELEVATION
1/4" = 1'-0"

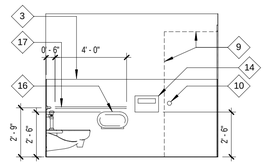

3 A501 A502 ROOM 113 - SOUTH ELEVATION
1/4" = 1'-0"

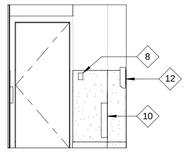

4 A501 A502 ROOM 113 - WEST ELEVATION
1/4" = 1'-0"

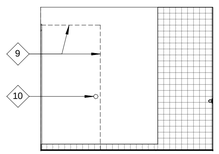

5 A501 A502 ROOM 114 - NORTH ELEVATION
1/4" = 1'-0"

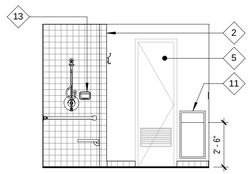

6 A501 A502 ROOM 114 - SOUTH ELEVATION
1/4" = 1'-0"

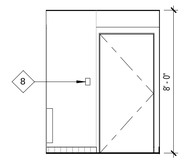

7 A501 A502 ROOM 114 - WEST ELEVATION
1/4" = 1'-0"

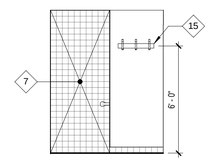

8 A501 A502 ROOM 114 - EAST ELEVATION (A)
1/4" = 1'-0"

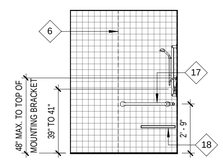

9 A501 A502 ROOM 114 - EAST ELEVATION (B)
1/4" = 1'-0"

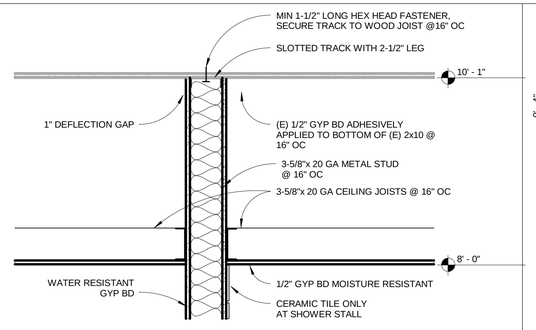

14 A501 A502 TOILET/SHOWER CEILING AT COMMON WALL
1 1/2" = 1'-0"

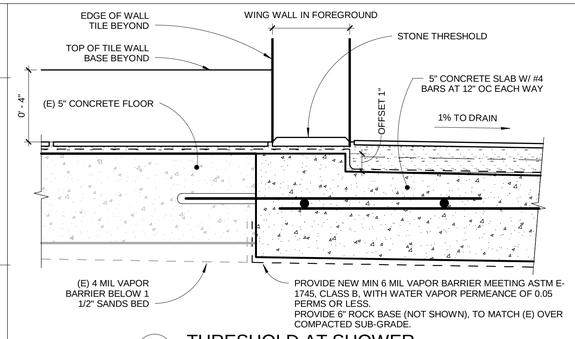

12 A501 A502 THRESHOLD AT SHOWER
3" = 1'-0"

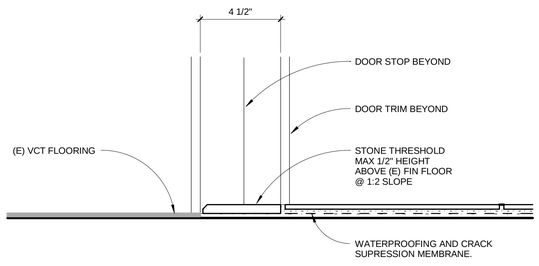

10 A501 A502 THRESHOLD AT ENTRY
3" = 1'-0"

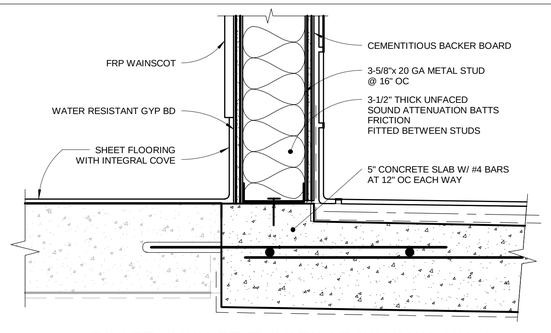

15 A501 A502 TOILET/SHOWER FLOORS AT COMMON WALL
3" = 1'-0"

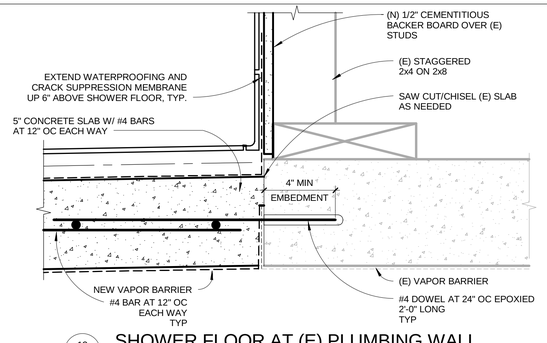

13 A501 A502 SHOWER FLOOR AT (E) PLUMBING WALL
3" = 1'-0"

BID OPTION 5

SHEET NOTES

1. SEE SHEET G006 FOR A MORE COMPLETE DESCRIPTION OF EACH BID OPTION.

KEY NOTES

1. PAINTED GWB, TYP.
2. 4X4 CERAMIC TILE. TERMINATE TILE AT WING WALL CORNER.
3. TOP OF FRP PANEL, TYP.
4. SHEET VINYL FLOORING WITH 4" HIGH INTEGRAL COVE AND METAL CAP, TYP.
5. RE-PAINT (E) DOOR AND FRAME.
6. EDGE OF SHOWER OPENING IN FORGROUND.
7. OPENS TO SHOWER.
8. ROOM OCCUPANCY SENSOR PER ELEC.
9. DOOR IN OPEN POSITION.
10. WALL BUMPER, PROVIDE WALL BACKING IN STUD CAVITY.
11. WASTE RECEPTACLE.
12. PAPER TOWEL DISPENSER.
13. SOAP DISH.
14. TOILET SEAT COVER DISPENSER.
15. CLOTHES HOOK STRIP.
16. TOILET PAPER ROLL DISPENSER.
17. GRAB BAR.
18. FOLDING SHOWER SEAT +18" AFF.

ZONE	LETTER	DESCRIPTION	DRAWN	DATE	Approver APPRVD

REVISIONS

DRAWN P.ALDEN | DATE
DESIGNED T.WONG | DATE
CHECKED D.CRAWFORD | DATE
A&E PM G.HITE | DATE
NASA PM W.LEE | DATE
REQUESTER G.RAICHE | DATE
R&QA | DATE
SAFETY/PSM | DATE
SUPERVISOR S. FRANKEL | DATE

LICENSED ARCHITECT DAVID NORMAN CRAWFORD C24904 3/31/13 RENEWAL DATE STATE OF CALIFORNIA

Ames Research Center
Moffett Field, California

REPLACE ARC JET COMPLEX SVS BOILER
ARCHITECTURAL

INTERIOR ELEVATIONS AND DETAILS

SIZE D | CAGE CODE 25307 | A 231-1300- A502 | REV
SCALE: As indicated | INDEX | SHEET | OF

FILE NAME: 60212932_SVS-Boiler Plant - Architecture.rvt 12/12/12

C:\Users\wbonaldi\Documents\Revit\2011\60212932_SVS-Boiler Plant_Arch-CENTRAL_wbonaldi.rvt
1/29/2013 8:03:08 AM

AECOM: 60212932.0001

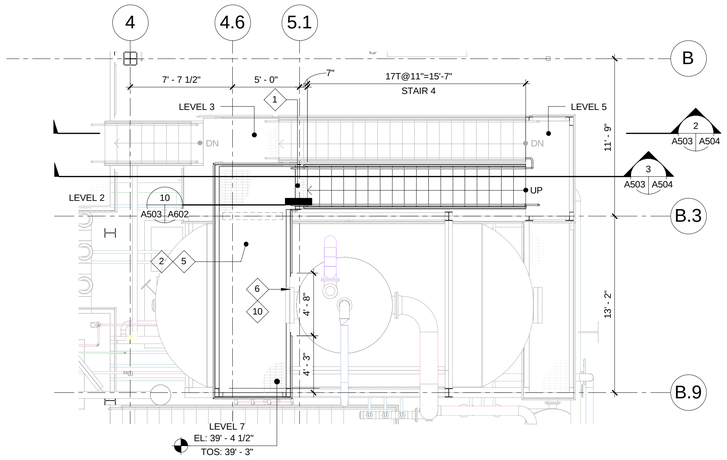

LEVEL 7 - UPPER PLATFORM PLAN

A301 A503 3/16" = 1'-0"

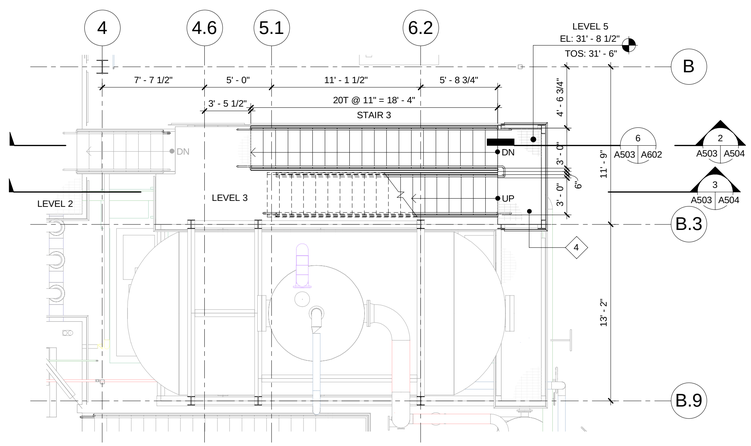

LEVEL 5 - STAIR LANDING PLAN

A301 A503 3/16" = 1'-0"

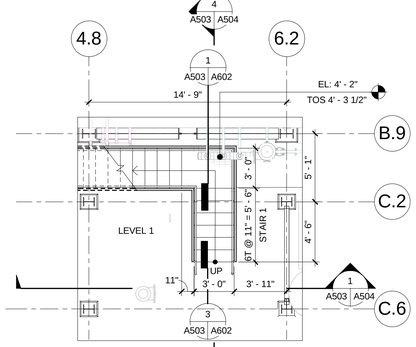

LEVEL 1 - STAIR 1 PARTIAL PLAN

A104 A503 3/16" = 1'-0"

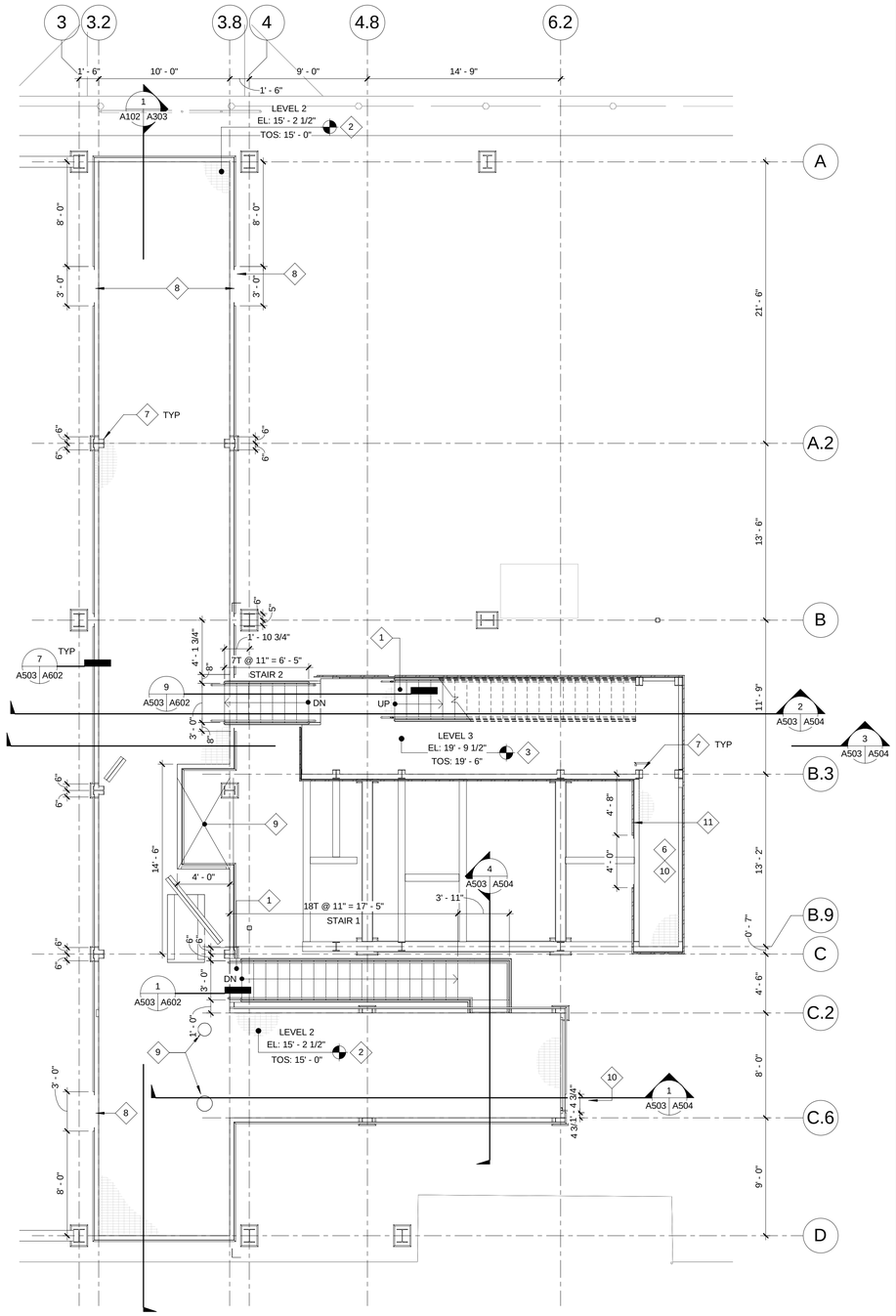

LEVELS 2 AND 3 - WALKWAY AND LOWER PLATFORM PLAN

A105 A503 3/16" = 1'-0"

SCALE: 3/16" = 1'-0"

SHEET NOTES

1. REFER TO MECHANICAL DRAWINGS FOR BOTTOM OF PIPE ELEVATIONS.
2. GALVANIZED GRATING AT STAIR TREADS AND LANDINGS NOT DEPICTED FOR GRAPHIC REASONS.
3. DEPTH OF GRATING IS 2 1/2" DEPTH, CUT OPENINGS IN GRATING FOR PIPING PER METAL BAR GRATING ASSOCIATION GUIDELINES.
4. STAIR WIDTH IS TAKEN TO INSIDE FACE OF STAIR STRINGER.
5. SEE STRUCTURAL DRAWINGS FOR CONSTRUCTION DETAILS THAT ARE NOT INCLUDED IN THE ARCHITECTURAL DRAWINGS.

KEY NOTES

1. PLATFORM TREAD @ 11", TYP.
2. WALKWAY WITH GALVANIZED GRATING WALKING SURFACE.
3. DEAERATOR LOWER PLATFORM AND LANDING.
4. DEAERATOR STAIRWAY INTERMEDIATE LANDING.
5. DEAERATOR UPPER PLATFORM AND LANDING.
6. VESSEL ACCESS PORT, TYPICAL OF 2.
7. NOTCH GRATING AS REQUIRED AT ALL COLUMNS, TYP.
8. LOCATION OF OPENINGS IN GUARDRAIL BASED ON ACCESS REQUIREMENTS BY BOILER EQUIPMENT MANUFACTURER AND SUBJECT TO CHANGE.
9. CUTOUT IN WALKWAY GRATING TO ACCOMODATE PIPE RISERS.
10. COORDINATE LOCATION OF GUARDRAIL BREAK WITH LOCATION OF PIPE OR EQUIPMENT ACCESS AS SHOWN.
11. EDGE OF GRATING IS TYPICALLY AT CENTERLINE OF BEAM. REFER TO 6/A602 FOR TYPICAL GUARDRAIL DETAIL.

ZONE	LETTER	DESCRIPTION	DRAWN	DATE	APPRVD

REVISIONS

DRAWN P.ALDEN	DATE	Ames Research Center Moffett Field, California
DESIGNED T.WONG	DATE	
CHECKED D.CRAWFORD	DATE	REPLACE ARC JET COMPLEX SVS BOILER ARCHITECTURAL
A&E PM G.HITE	DATE	BOILER AREA ENLARGED EQUIPMENT WALKWAY AND PLATFORMS PLANS
NASA PM W.LEE	DATE	
REQUESTER G.RAICHE	DATE	
R&QA	DATE	
SAFETY/PSM	DATE	
SUPERVISOR S. FRANKEL	DATE	

LICENSED ARCHITECT DAVID NORMAN CRAWFORD C24904 3/31/13 RENEWAL DATE STATE OF CALIFORNIA

SIZE	CAGE CODE		REV
D	25307	A 231-1300- A503	
SCALE: 3/16" = 1'-0"	INDEX	SHEET	OF

FILE NAME: 60212932_SVS-Boiler Plant - Architecture.rvt 12/12/12

C:\Users\wbonaldi\Documents\Revit\2011\60212932_SVS-Boiler Plant_Arch-CENTRAL_wbonaldi.rvt
1/29/2013 8:03:14 AM

AECOM: 60212932.0001

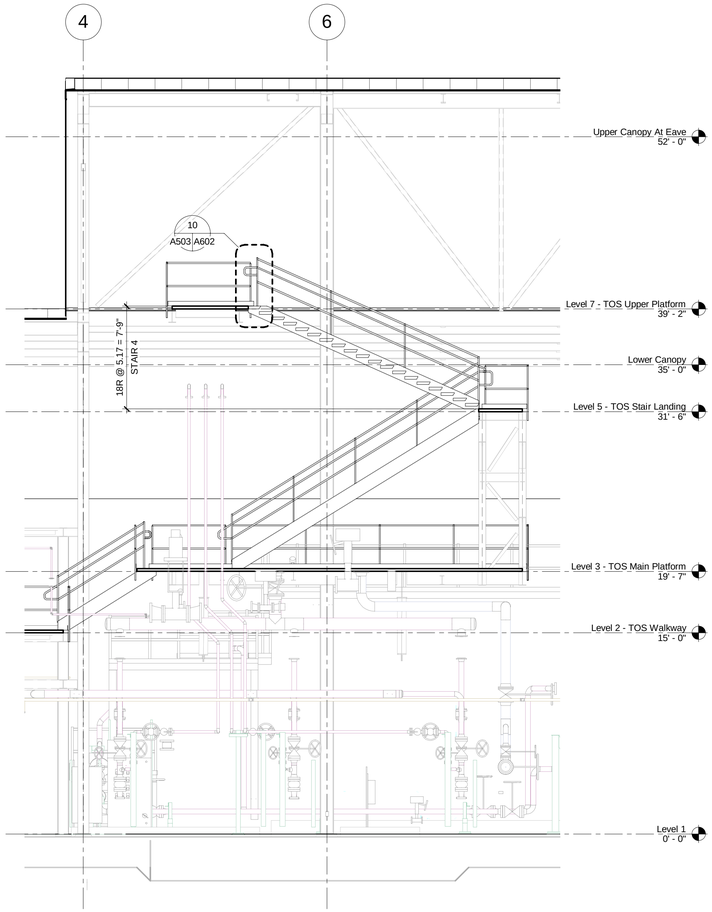

3 A503 A504 SECTION AT STAIR 4
3/16" = 1'-0"

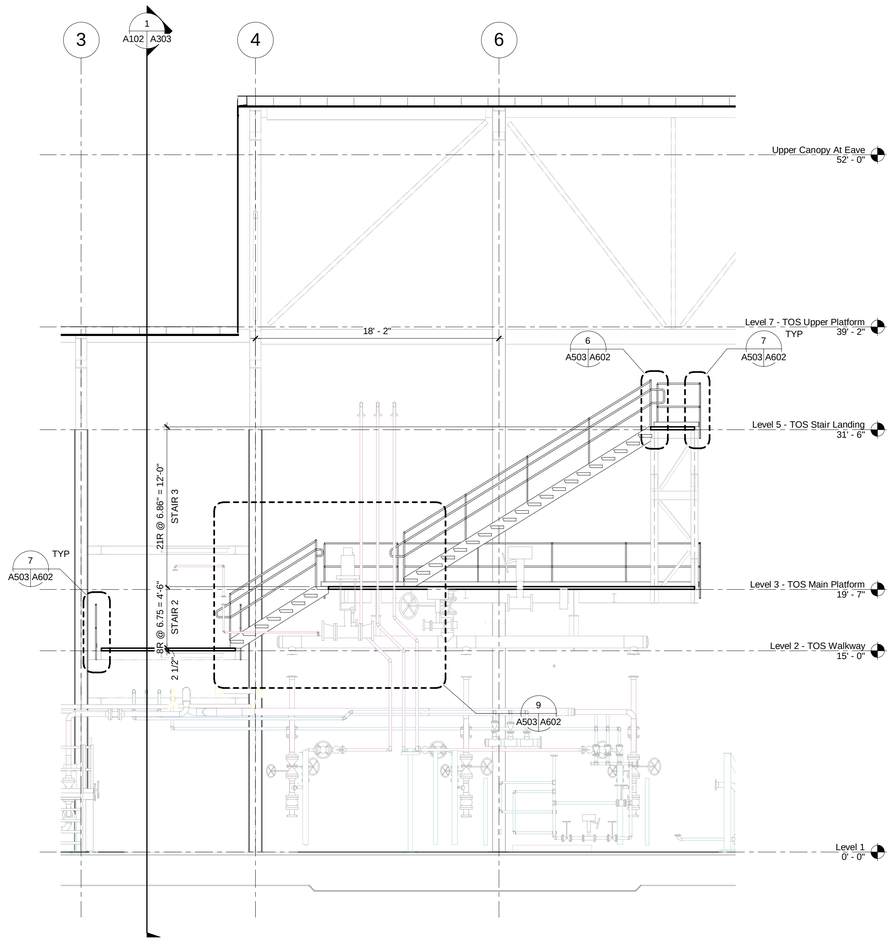

2 A503 A504 SECTION AT STAIRS 2 & 3
3/16" = 1'-0"

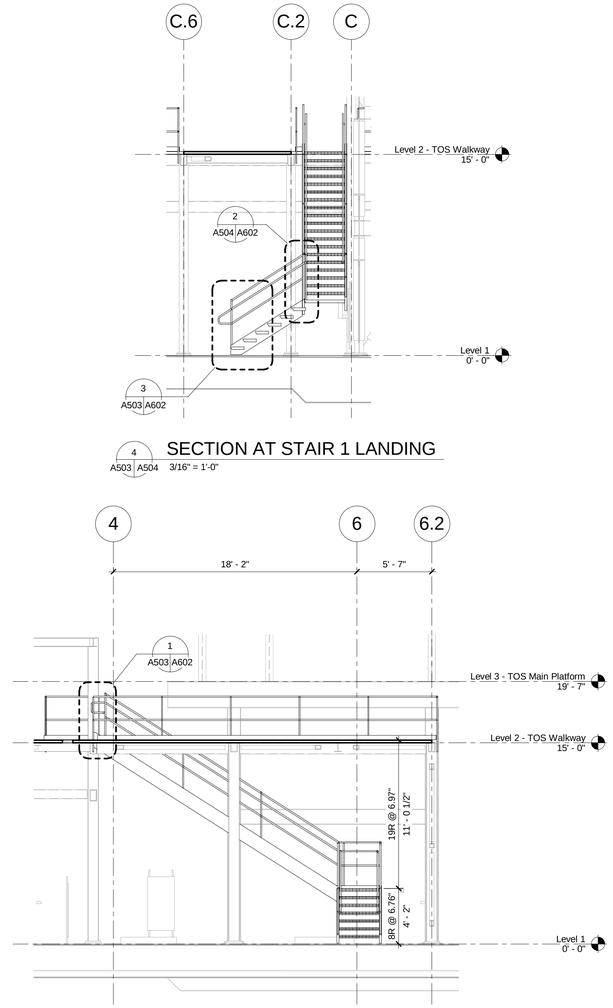

4 A503 A504 SECTION AT STAIR 1 LANDING
3/16" = 1'-0"

1 A503 A504 SECTION AT STAIR 1
3/16" = 1'-0"

SCALE: 3/16" = 1'-0"
2' 0' 4' 10' 20'

LICENSED ARCHITECT
DAVID NORMAN CRAWFORD
C24904
3/31/13
RENEWAL DATE
STATE OF CALIFORNIA

ZONE	LETTER	DESCRIPTION	DRAWN	DATE	Approver APPRVD

REVISIONS

DRAWN P.ALDEN	DATE	
DESIGNED T.WONG	DATE	
CHECKED D.CRAWFORD	DATE	
A&E PM G.HITE	DATE	
NASA PM W.LEE	DATE	
REQUESTER G.RAICHE	DATE	
R&QA	DATE	
SAFETY/PSM	DATE	
SUPERVISOR S. FRANKEL	DATE	

Ames Research Center
Moffett Field, California

REPLACE ARC JET COMPLEX SVS BOILER
ARCHITECTURAL

BOILER AREA EQUIPMENT PLATFORM AND STAIR SECTIONS

SIZE	CAGE CODE		REV
D	25307	A 231-1300- A504	
SCALE: 3/16" = 1'-0"	INDEX	SHEET	OF

FILE NAME: 60212932_SVS-Boiler Plant - Architecture.rvt 12/12/12

C:\Users\wbonaldi\Documents\Revit2011\60212932_SVS-Boiler Plant_Arch-CENTRAL_wbonaldi.rvt
1/29/2013 8:03:20 AM

AECOM: 60212932.0001

DWG NO. **A231-1300- A601** | SH. | REV

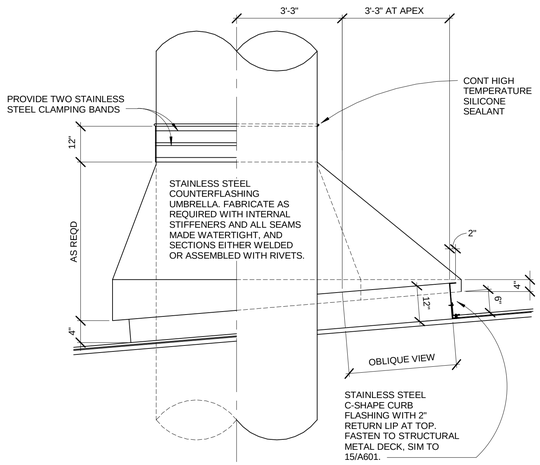

13 A107 A601 EXHAUST STACK FLASHING
1/2" = 1'-0"

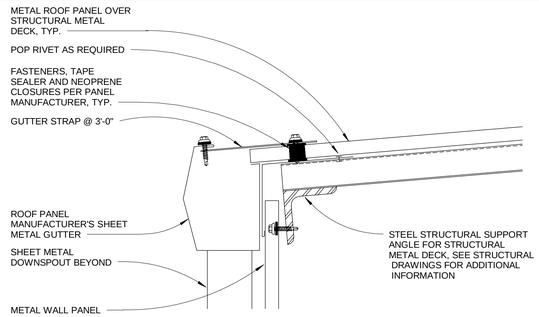

8 A107 A601 GUTTER DETAIL
3" = 1'-0"

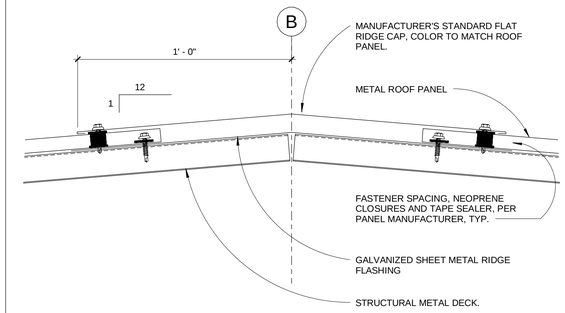

4 A107 A601 RIDGE CAP
3" = 1'-0"

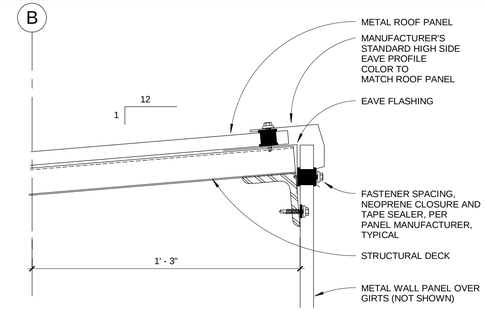

1 A107 A601 HIGH SIDE EAVE AT HIGH CANOPY
3" = 1'-0"

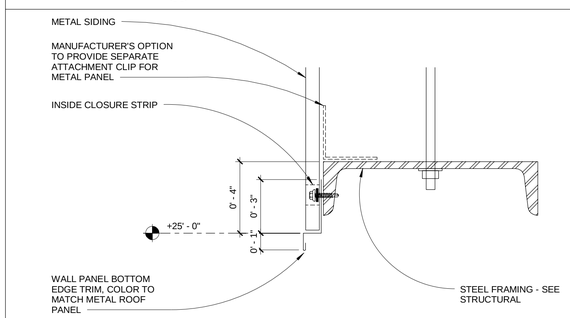

9 A106 A601 METAL WALL PANEL EDGE
3" = 1'-0"

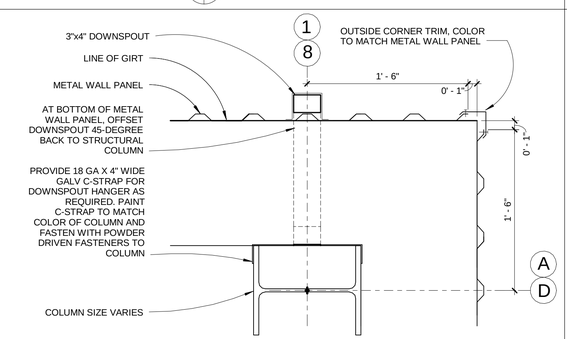

5 A107 A601 METAL WALL PANEL OUTSIDE CORNER
1 1/2" = 1'-0"

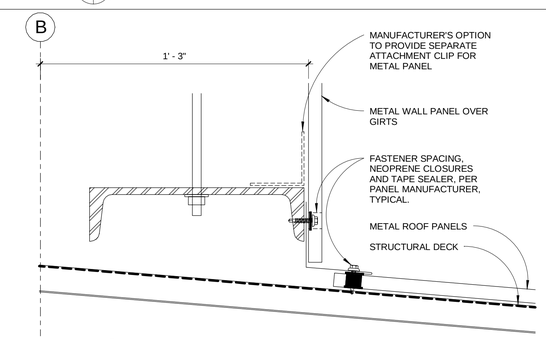

2 A107 A601 LOW SIDE EAVE AT HIGH CANOPY
3" = 1'-0"

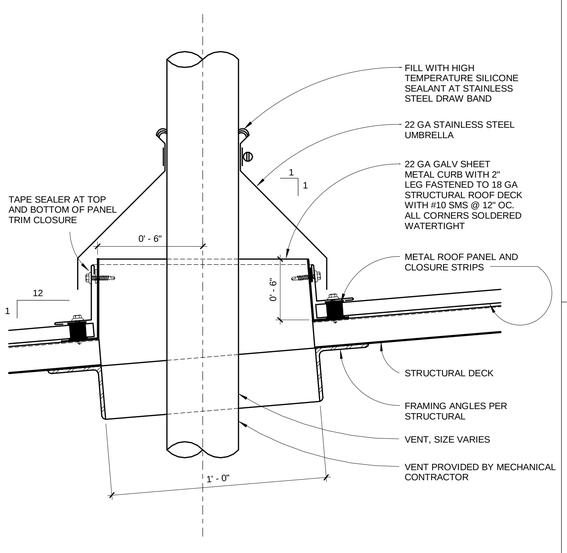

15 A107 A601 TYPICAL CANOPY VENT FLASHING
3" = 1'-0"

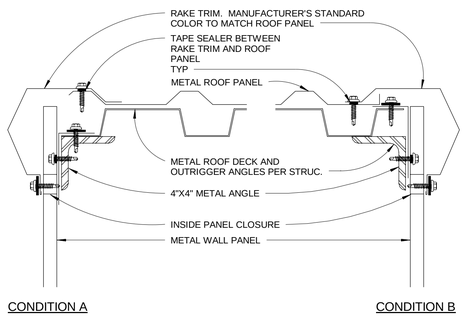

10 A107 A601 TYPICAL RAKE DETAILS
3" = 1'-0"

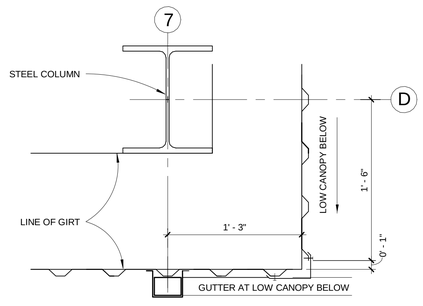

6 A107 A601 WALL PANEL AT HIGH CANOPY
1 1/2" = 1'-0"

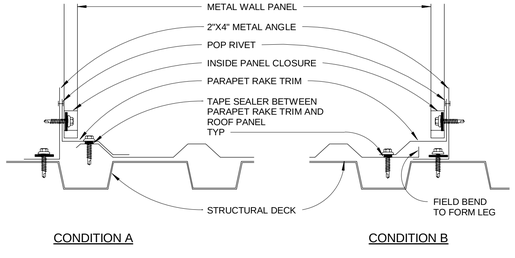

11 A107 A601 TYPICAL PARAPET RAKE DETAILS
3" = 1'-0"

ZONE	LETTER	DESCRIPTION	DRAWN	DATE	Approver APPRVD

REVISIONS

DRAWN P.ALDEN	DATE	Ames Research Center Moffett Field, California
DESIGNED T.WONG	DATE	
CHECKED D.CRAWFORD	DATE	REPLACE ARC JET COMPLEX SVS BOILER ARCHITECTURAL
A&E PM G.HITE	DATE	
NASA PM W.LEE	DATE	EXTERIOR DETAILS
REQUESTER G.RAICHE	DATE	
R&QA	DATE	
SAFETY/PSM	DATE	
SUPERVISOR S. FRANKEL	DATE	

LICENSED ARCHITECT DAVID NORMAN CRAWFORD C24904 3/31/13 RENEWAL DATE STATE OF CALIFORNIA

SIZE	CAGE CODE		REV
D	25307	A 231-1300- A601	
SCALE: As indicated		INDEX	SHEET OF

FILE NAME: 60212932_SVS-Boiler Plant - Architecture.rvt 12/12/12

C:\Users\wbonaldi\Documents\Revit\2011\60212932_SVS-Boiler Plant_Arch-CENTRAL_wbonaldi.rvt
1/29/2013 8:03:22 AM

AECOM: 60212932.0001

DWG NO. A231-1300- A602 | SH. | REV

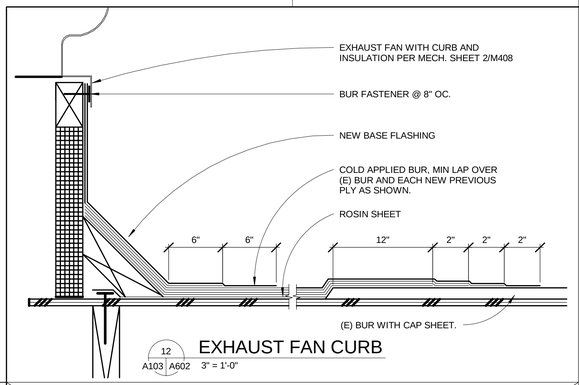

12 A103 A602 EXHAUST FAN CURB 3" = 1'-0"

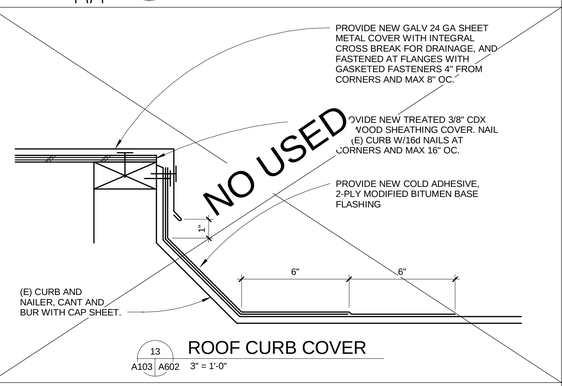

13 A103 A602 ROOF CURB COVER 3" = 1'-0"

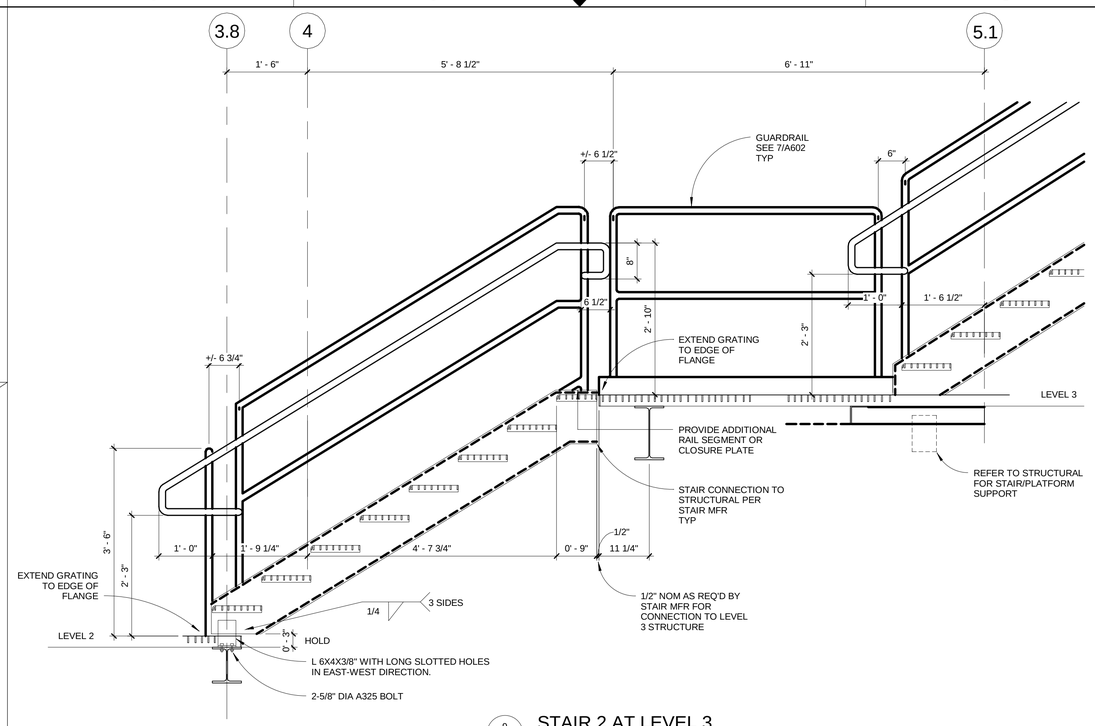

9 A503 A602 STAIR 2 AT LEVEL 3 3/4" = 1'-0"

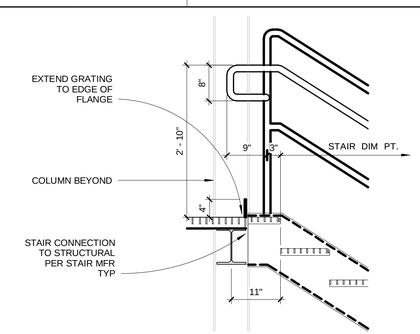

1 A503 A602 STAIR 1 AT LEVEL 2 3/4" = 1'-0"

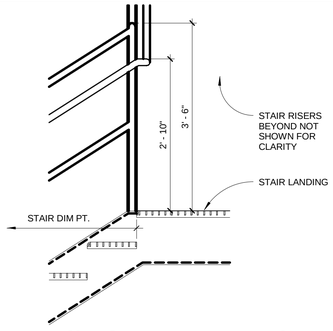

2 A504 A602 STAIR 1 AT LANDING 3/4" = 1'-0"

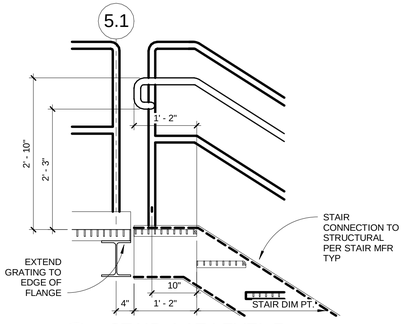

10 A503 A602 STAIR 4 AT LEVEL 7 3/4" = 1'-0"

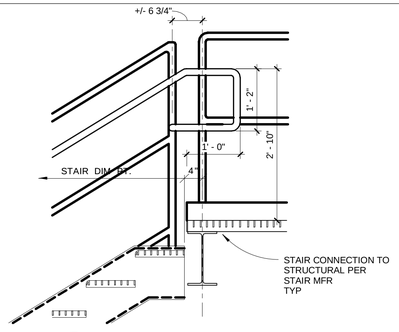

6 A503 A602 STAIR 3 AT LEVEL 5 3/4" = 1'-0"

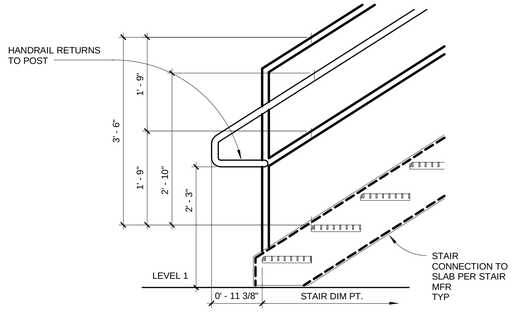

3 A503 A602 STAIR 1 AT LEVEL 1 3/4" = 1'-0"

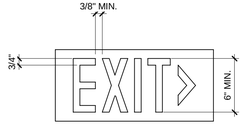

4 A602 EXIT SIGN 1 1/2" = 1'-0"

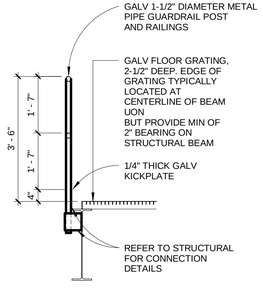

7 A503 A602 TYPICAL GUARDRAIL DETAIL 1/2" = 1'-0"

LICENSED ARCHITECT DAVID NORMAN CRAWFORD C24904 3/31/13 RENEWAL DATE STATE OF CALIFORNIA

ZONE	LETTER	DESCRIPTION	DRAWN	DATE	Approver APPRVD

REVISIONS

DRAWN P.ALDEN	DATE
DESIGNED T.WONG	DATE
CHECKED D.CRAWFORD	DATE
A&E PM G.HITE	DATE
NASA PM W.LEE	DATE
REQUESTER G.RAICHE	DATE
R&QA	DATE
SAFETY/PSM	DATE
SUPERVISOR S. FRANKEL	DATE

Ames Research Center
Moffett Field, California

REPLACE ARC JET COMPLEX SVS BOILER
ARCHITECTURAL

EXTERIOR DETAILS

SIZE	CAGE CODE		REV
D	25307	A 231-1300- A602	

SCALE: As indicated | INDEX | SHEET | OF

FILE NAME: 60212932_SVS-Boiler Plant - Architecture.rvt 12/12/12

C:\Users\wbonald\Documents\Revit\2011\60212932_SVS-Boiler Plant_Arch-CENTRAL_wbonald.rvt
1/29/2013 8:03:24 AM

AECOM: 60212932.0001

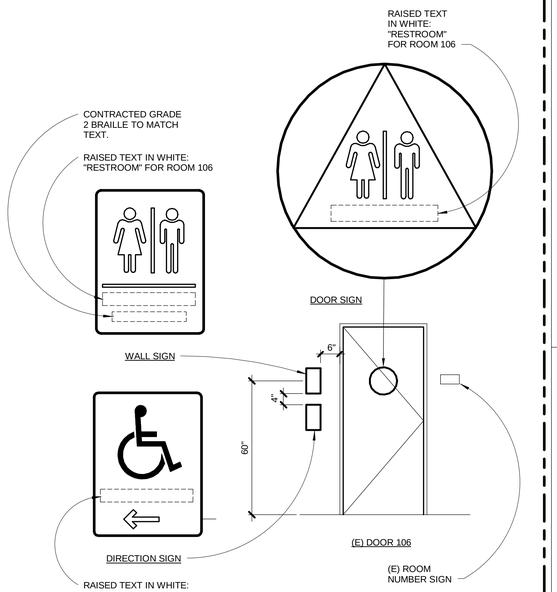

BID OPTION 5

13 A102 A701 RESTROOM SIGNAGE
NOT TO SCALE

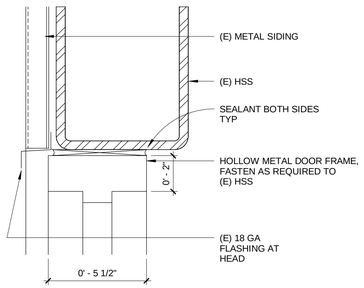

8 A102 A701 DOOR HEAD AT METAL SIDING (JAMB SIM)
3" = 1'-0"

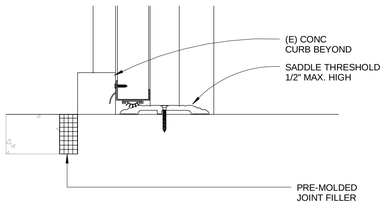

9 A102 A701 DOOR THRESHOLD AT METAL SIDING
3" = 1'-0"

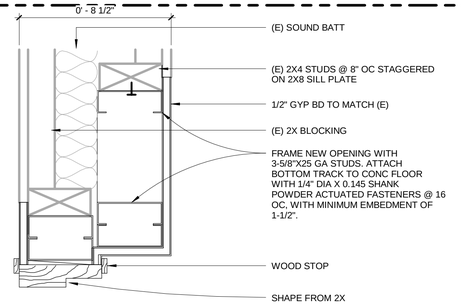

4 A501 A701 DOOR JAMB AT STAGGERED STUD WALL
3" = 1'-0"

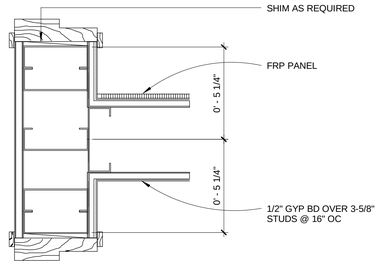

5 A501 A701 DOOR JAMB AT METAL STUD WALL
3" = 1'-0"

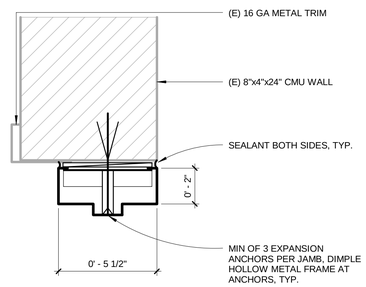

1 A102 A701 DOOR JAMB AT CMU (HEAD SIM)
3" = 1'-0"

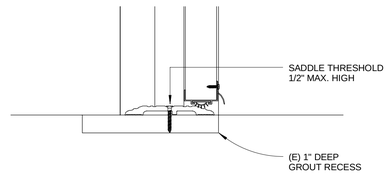

2 A102 A701 DOOR THRESHOLD AT CMU
3" = 1'-0"

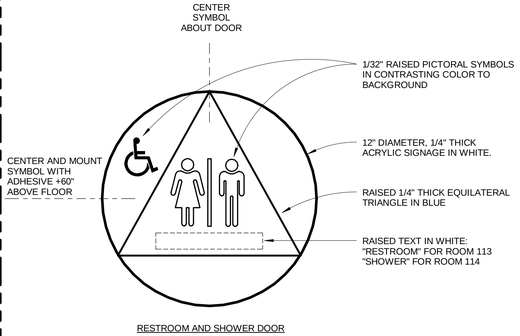

RESTROOM AND SHOWER DOOR

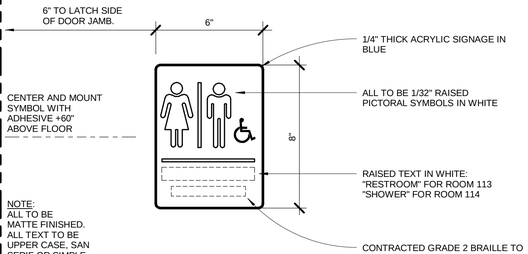

NOTE:
ALL TO BE MATTE FINISHED.
ALL TEXT TO BE UPPER CASE, SAN SERIF OR SIMPLE SERIF TYPE, MINIMUM 5/8" HIGH.

RESTROOM AND SHOWER WALL

14 A102 A701 RESTROOM SIGNAGE - PLACARD DETAILS
NOT TO SCALE

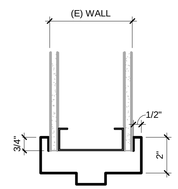

10 A102 A701 DOOR JAMB (HEAD SIM)
3" = 1'-0"

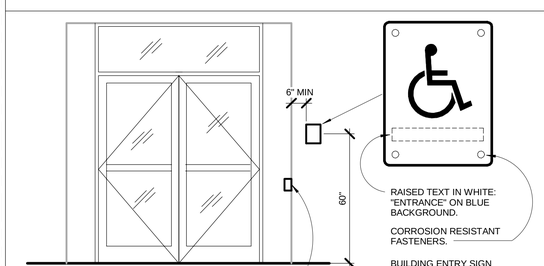

11 A102 A701 ENTRY DOOR SIGNAGE
3" = 1'-0"

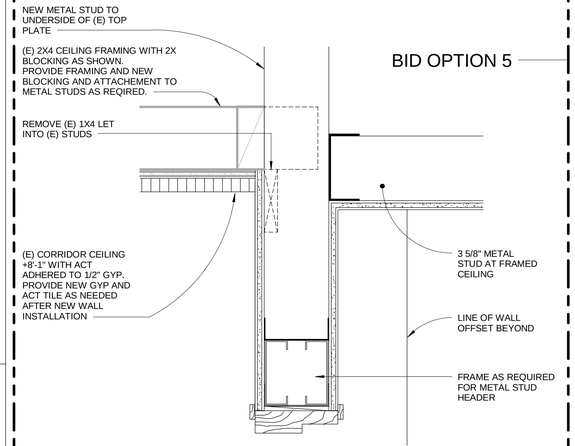

BID OPTION 5

7 A501 A701 DOOR HEAD AT METAL STUD WALL
3" = 1'-0"

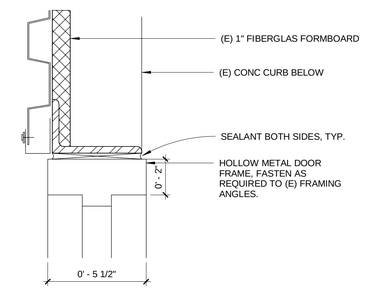

3 A102 A701 DOOR JAMB AT METAL SIDING
3" = 1'-0"

LICENSED ARCHITECT DAVID NORMAN CRAWFORD C24904 3/31/13 RENEWAL DATE STATE OF CALIFORNIA

ZONE	LETTER	DESCRIPTION	DRAWN	DATE	Approver APPRVD

REVISIONS

DRAWN P.ALDEN	DATE	
DESIGNED T.WONG	DATE	
CHECKED D.CRAWFORD	DATE	
A&E PM G.HITE	DATE	
NASA PM W.LEE	DATE	
REQUESTER G.RAICHE	DATE	
R&QA	DATE	
SAFETY/PSM	DATE	
SUPERVISOR S. FRANKEL	DATE	

Ames Research Center
Moffett Field, California

REPLACE ARC JET COMPLEX SVS BOILER
ARCHITECTURAL

INTERIOR DETAILS

SIZE	CAGE CODE		REV
D	25307	A 231-1300- A701	
SCALE: As indicated	INDEX	SHEET	OF

FILE NAME: 60212932_SVS-Boiler Plant - Architecture.rvt 12/12/12

C:\Users\wbonald\Documents\Revit2011\60212932_SVS-Boiler Plant_Arch-CENTRAL_wbonald.rvt
1/29/2013 8:03:26 AM

AECOM: 60212932.0001

DWG NO. **A231-1300- S001** SH. REV

GENERAL NOTES

1. EACH STRUCTURE IS DESIGNED AS A STABLE UNIT AFTER ALL THE COMPONENTS ARE IN PLACE. THE CONTRACTOR SHALL PROVIDE TEMPORARY BRACING AS REQUIRED TO ENSURE VERTICAL AND LATERAL STABILITY OF THE STRUCTURE AND PORTIONS THEREOF DURING CONSTRUCTION.
2. STRUCTURAL DRAWINGS SHALL BE READ IN CONJUNCTION WITH SPECIFICATIONS AND ALL OTHER DRAWINGS RELATING TO THE WORK.
3. CONTRACTOR SHALL VERIFY ALL DIMENSIONS, ELEVATIONS AND CONDITIONS AT THE SITE AND SHALL NOTIFY THE CONTRACTING OFFICER OF DISCREPANCIES IF NECESSARAY BETWEEN THE ACTUAL CONDITIONS AND INFORMATION SHOWN ON THE DRAWINGS REMEDIAL ACTION SHALL BE TAKEN BEFORE PROCEEDING WITH THE WORK.
4. LOCATION AND SIZES OF OPENINGS IN FLOORS, ROOFS AND WALLS SHALL BE VERIFIED WITH ARCHITECTURAL, MECHANICAL, PLUMBING, FIRE PROTECTION AND ELECTRICAL DRAWINGS.
5. NO PIPES, CONDUITS OR DUCTS SHALL BE PLACED IN SLABS, BEAMS, FOOTINGS OR WALLS, UNLESS SPECIFICALLY DETAILED ON STRUCTURAL DRAWINGS.
6. LOCATION AND SIZE OF EQUIPMENT SHALL BE VERIFIED WITH PLUMBING, FIRE PROTECTION, MECHANICAL, ELECTRICAL & MANUFACTURER'S DRAWINGS.
7. SEE PLUMBING, FIRE PROTECTION, MECHANICAL, ELECTRICAL AND MANUFACTURER'S DRAWINGS FOR SIZE, LOCATION AND ANCHOR BOLT REQUIREMENTS OF ALL EQUIPMENT. THE CONTRACTOR SHALL OBTAIN MANUFACTURER'S TEMPLATES SHOWING ANCHOR BOLT LOCATION FOR ALL EQUIPMENT.
8. SEE ARCHITECTURAL PLANS FOR LOCATION OF ALL NON-BEARING PARTITIONS, CONCRETE CURBS, FLOOR AND ROOF SLOPES, DRAINS, AND LOCATION AND DETAILS OF ALL MISCELLANEOUS HANDRAILS, LADDERS, HANGERS & STEEL GRATINGS. FOR LOCATION AND DETAIL OF MISCELLANEOUS YARD WORK INCLUDING WALKS, CURBS & DRIVEWAYS, SEE CIVIL DRAWINGS.
9. FOR UNDERGROUND UTILITIES, SEE CIVIL DRAWINGS.
10. SPECIFIC NOTES AND DETAILS SHALL TAKE PRECEDENCE OVER GENERAL NOTES AND TYPICAL DETAILS. DO NOT SCALE DRAWINGS.
11. CONTRACTOR SHALL VERIFY EXACT LOCATION WEIGHT AND OPENING SIZES OF ROOF & FLOOR MOUNTED EQUIPMENT, WITH THE MANUFACTURER'S SHOP DRAWINGS AND PROVIDE THIS INFORMATION TO THE STEEL FABRICATOR PRIOR TO FABRICATION AND ERECTION.

DESIGN CRITERIA

DESIGN CRITERIA FOR BUILDING STRUCTURE AND NON-BUILDING STRUCTURE

1. DEAD LOAD: ACTUAL CALCULATED WEIGHTS OF PERMANENT STRUCTURES AND ITEMS PERMANENTLY ATTACHED TO THE STRUCTURE.
2. LIVE LOAD:

ROOF ..... 20 psf
WALKWAYS ..... 50 psf
MAT FOUNDATION ..... 250 psf OR ACTUAL OPERATING WEIGHT OF EQUIPMENT

3. LATERAL LOAD

a) WIND LOAD

I = 1.15
V = 85 MPH
WIND EXPOSURE B
OCCUPANCY CATEGORY III

b) SEISMIC LOAD PER 2010 CALIFORNIA BUILDING CODE & ASCE 7-05

OCCUPANCY CATEGORY III
SPECTRAL RESPONSE COEFFICIENTS
S_S = 1.5g
S_1 = 0.6g
I = 1.25 (EXCEPT FOR COMPONENTS DESIGN UNDER ASME CODE I=1.5)

SITE COEFFICIENTS
F_v = 1.0
F_a = 1.5

SEISMIC DESIGN CATEGORY "D"
SITE CLASS D
BASIC STRUCTURAL SYSTEM:

ORDINARY STEEL CONCENTRICALLY BRACED FRAMES
RESPONSE MODIFICATION COEFFICIENT R = 3.25
SYSTEM OVERSTRENGTH FACTOR = 2
DEFLECTION AMPLIFICATION FACTOR C_d = 3.25

DESIGN CRITERIA FOR NON-STRUCTURAL COMPONENTS

1. DEAD LOAD
2. LATERAL LOAD

a) WIND LOAD
I = 1.15
V = 85 MPH

WIND EXPOSURE B
OCCUPANCY CATEGORY III

b) SEISMIC LOAD PER 2010 CBC AND ASCE 7-05 CHAPTER 13 & 15

$$F_p = \frac{0.4\, a_p S_{DS} W_p}{\left(\frac{R_p}{I_p}\right)}\left(1 + 2\frac{z}{h}\right)$$

W_p = WEIGHT
S_S = 1.5g
S_1 = 0.6g
S_{DS} = 1.0 g
S_{D1} = 0.6 g
Ip = 1.25 (EXCEPT FOR COMPONENTS DESIGN UNDER ASME CODE I_p=1.5)
a_p = 1 SEE TABLE ASCE 7-05 TABLE 13.6-1
R_p = 2.5 SEE TABLE ASCE 7-05 TABLE 13.6-1 (EXCEPT FOR NON CRITICAL PIPING, DESIGN AS DEFINED BY ASME CODE Rp=3.5; a_p=2.5, FOR CRITICAL PIPING SEE M603 AND M002)
V = C_SW
W = WEIGHT

LOAD COMBINATION
STRENGTH DESIGN ASCE 7-05 SECTION 2.3.2

1.4D
1.2D + 1.6 L + 0.5 Lr
1.2D + 1.6 Lr + 0.8 W
1.2D + 1.6 W + 0.5 Lr
1.4D + (Rho) E
0.9D + 1.6 W
0.7D + (Rho) E
1.4D + (Omega) E
0.7D + (Omega) E

ALLOWABLE STRENGTH DESIGN ASCE 7-05 SECTION 2.4.1

D + Lr
D + W
1.14D + 0.7 (Rho) E
D + 0.75 W + 0.75 Lr
1.1D + 0.75 (0.7) (Rho) E+0.75 Lr
0.6D + W
0.46D + 0.7 (Rho) E
1.14D + 0.7 (Omega) E
1.105D + 0.525 (Omega) E + 0.75 Lr
0.46D + 0.7 (Omega) E

FOUNDATION

1. FOUNDATION DESIGN IS BASED ON THE FOLLOWING:

NET ALLOWABLE BEARING CAPACITY:

DL + LL = 1000 psf

DL + SEISMIC = 3000 psf

PASSIVE PRESSURE = 300 pcf (UPPER 1-FOOT OF SOIL BE IGNORED)

FRICTION COEFICIENT = 0.3

2. VERIFY ALL EXISTING FIELD CONDITIONS THAT MAY AFFECT THE INSTALLATION OF THE FOUNDATION SYSTEM PRIOR TO STARTING WORK. LOCATE AND PROTECT ALL UTILITIES WHICH MAY BE AFFECTED BY THE CONSTRUCTION PROCESS.
3. FOUNDATION SUBGRADE, CAPACITY AND FINAL ELEVATIONS SHALL BE INSPECTED & APPROVED BY THE CONTRACTING OFFICER'S REPRESENTATIVE (COR) PRIOR TO PLACING CONCRETE.
4. DO NOT PLACE UTILITY LINES THROUGH OR BELOW FOUNDATIONS WITHOUT REVIEW BY CONTRACTING OFFICER.
5. GROUND WATER MAY BE ENCOUNTERED AS SHALLOW AS 4 FEET BELOW GROUND SURFACE. TEMPORARY DEWATERING MAY BE NECESSARY. DEWATERING CONTRACTOR SHOULD DESIGN A DEWATERING SYSTEM FOR GOVERNMENT APPROVAL.

CONCRETE

1. UNLESS NOTED OTHERWISE ON THE DRAWINGS OR SPECIFICATIONS, ALL STRUCTURAL CONCRETE SHALL BE HARD ROCK - 145 #/CU.FT., AND SHALL HAVE THE FOLLOWING MINIMUM COMPRESSIVE STRENGTH AT 28 DAYS:

FOOTINGS fc = 4000 PSI

2. ALL CONCRETE MIXES SHALL BE DESIGNED BY A RECOGNIZED TESTING LABORATORY, STAMPED AND SEALED BY A LICENSED CALIFORNIA CIVIL ENGINEER AND SUBMITTED TO THE CONTRACTING OFFICER FOR APPROVAL.
3. COMPRESSIVE STRENGTH TEST REPORTS SHALL BE SUBMITTED TO THE CONTRACTING OFFICER.
4. AGGREGATES IN NORMAL WEIGHT CONCRETE SHALL CONFORM TO ASTM C-33.
5. PORTLAND CEMENT : TYPE II FOR CONFORMING TO ASTM C150, LOW ALKALI, MILL TESTED WITH CERTIFICATES OF COMPLIANCE REQUIRED.
6. CONCRETE MIXING OPERATIONS, ETC. SHALL CONFORM TO ASTM C94.
7. UNLESS OTHERWISE SHOWN OR NOTED, CONCRETE COVER FOR REINFORCING BARS TO FACE OF CONCRETE SHALL BE AS FOLLOWS :

CONCRETE IN CONTACT WITH EARTH, UNFORMED ---------- 3"

CONCRETE IN CONTACT WITH EARTH, FORMED ---------- 2"

WALL EXTERIOR FACE, EXPOSED TO WEATHER ---------- 2" (FOR #6 BARS AND LARGER)

WALL EXTERIOR FACE, EXPOSED TO WEATHER ---------- 1 1/ 2" (FOR #5 BARS AND SMALLER)

WALL INTERIOR FACE, NOT EXPOSED TO WEATHER ---------- 1"

8. ALL REINFORCING BARS, ANCHOR BOLTS AND OTHER CONCRETE INSERTS SHALL BE WELL SECURED IN POSITION PRIOR TO INSPECTION BEFORE PLACING CONCRETE.
9. REFER TO ARCHITECTURAL DRAWINGS FOR MOLDS, GROOVES, ORNAMENTS, CLIPS OR GROUNDS REQUIRED TO BE CAST INTO THE CONCRETE AND FOR EXTENT OF DEPRESSIONS, RAMPS, ETC.

STRUCTURAL STEEL

1. FABRICATION AND CONSTRUCTION SHALL CONFORM TO THE AMERICAN INSTITUTE OF STEEL CONSTRUCTION, MANUAL OF STEEL CONSTRUCTION. ALLOWABLE STRESS DESIGN, SPECIFICATIONS AND CODES, 13TH EDITION.
2. STRUCTURAL STEEL SHAPES, EXCEPT W-SHAPES, PLATES, BARS AND ROD SHALL CONFORM TO ASTM A36, U.N.O.
3. W-SHAPES SHALL BE ASTM A992, GRADE 50.
4. HOLLOW STRUCTURAL SECTION (HSS) SHALL BE ASTM A500 GRADE B, Fy = 46 KSI.
5. STEEL PIPE SHALL BE STANDARD OR EXTRA STRONG PIPE CONFORMING TO ASTM A53, GRADE B UNLESS OTHERWISE NOTED.
6. HIGH STRENGTH BOLTS (H.S.B.) SHALL BE ASTM A325-N, BOLT TYPE AS INDICATED ON DRAWINGS. ALL BOLTS SHALL BE FULLY TENSIONED UNLESS OTHERWISE NOTED.
7. ANCHOR BOLTS (A.B.) SHALL BE ASTM F1554 GR36 ksi THREADED RODS WITH HEAVY HEX NUTS AND FLAT WASHERS U.N.O. ON DRAWINGS.
8. BOLT HOLES IN STEEL SHALL BE 1/16" LARGER THAN BOLTS, UNLESS OTHERWISE NOTED ON PLANS. ALL BOLT HOLES TO BE DRILLED OR PUNCHED. BURNING OF HOLES SHALL NOT BE PERMITTED.
9. ALL SHOP AND FIELD WELDING PER AWS, D1.1, STRUCTURAL WELDING CODE. WELDING ELECTRODE - E70XX, OR EQUIVALENT, SHALL BE USED AT ALL STRUCTURAL STEEL CONNECTIONS, U.N.O.
10. DEFECTIVE WELDS SHALL BE GROUND OUT, REPAIRED, AND RE-TESTED AT CONTRACTORS EXPENSE.
11. ALL STRUCTURAL STEEL SHALL BE PRIMED AND PAINTED ACCORDING TO SPECIFICATION.
12. AN INDEPENDENT TESTING AGENCY HIRED BY THE CONTRACTOR TO BE APPROVED BY THE COR WILL BE ASSIGNED TO INSPECT THE INSTALLATION, MATERIAL AND WELDING PROCEDURE ACCORDING TO AWS D1.1 SECTION 4.1.2. THE TESTING AGENCY SHALL PERFORM THE FOLLOWING TASKS AND INSPECTIONS:
    a. FURNISH COPIES OF MILL TEST REPORTS OF ALL STEEL MATERIALS TO THE COR SHOWING CONFORMANCE WITH SPECIFIED ASTM DESIGNATIONS PRIOR TO FABRICATION OF ANY WORK. CERTIFIED LOTS SHALL BE SO IDENTIFIED.
    b. QUALIFICATION OF SHOP AND FIELD WELDING PROCEDURES AND PERSONNEL.
    c. CONTINUOUS VISUAL AND ULTRASONIC INSPECTION OF ALL WELDS IN ACCORDANCE WITH SECTION 6 OF AWS D1.1 . WELDING CODE, 2010 C.B.C. AND THESE DRAWINGS.
    d. INSPECTION OF SHOP AND FIELD WELDING PROCEDURES.
    e. 100% ULTRASONIC INSPECTION OF ALL FULL PENETRATION WELDS PER AWS D 1.1, 2010 TABLE 6.2 FOR ACCEPTANCE - REJECTION CRITERIA.
13. QUALIFICATION AND CERTIFICATION OF INSPECTOR NEED TO BE SUBMITTED TO COR PRIOR TO START OF CONSTRUCTION. INSPECTOR QUALIFICATION AND CERTIFICATION ARE AS FOLLOWS:
    a. QUALIFICATION / CERTIFICATION RECORDS OF AWS D.1.1 CWI FOR VISUAL INSPECTOR PERSONNEL, AND ASNT-TC-1A RECOMMENDED PRACTICE CERTIFICATION FOR PERSONNEL PERFORMING NON-DESTRUCTIVE TESTING BY ULTRASONICS.
14. PROVIDE PLATE WASHER SPACER WITH PRE-TENSION 3/4" DIA. A325-SC BOLTS AT EQUAL SPACING:
    1. 2L5X3 1/2X5/8 24" SPACING ON CENTER MAXIMUM
    2. 2L3X3X3/8 24" SPACING ON CENTER MAXIMUM
    3. 2L4X4X1/2 24" SPACING ON CENTER MAXIMUM
    4. 2L6X6X1/2 24" SPACING ON CENTER MAXIMUM
15. ADDITIONAL STEEL TO SUPPORT MECHANICAL PIPES SUCH AS STEEL BEAMS, ANGLES, POSTS, BRACINGS, STIFFENER PLATES, BASE PLATES, ANCHOR BOLTS, ETC ARE SHOWN ON THE MECHANICAL DRAWINGS.

STEEL STAIRS

1. METAL STAIRS SHALL BE PROVIDED BY THE STAIR FABRICATOR TO SUPPORT A SUPERIMPOSED LIVE LOAD OF 100 PSF.

OTHER STAIR ELEMENTS (RAILINGS, ETC.)SHALL BE DESIGNED IN ACCORDANCE WITH THE APPLICABLE BUILDING CODE AS SHOWN ON GENRAL NOTES SHEET S001.

2. STAIR SHOP DRAWINGS TOGETHER WITH STAIR CALCULATIONS SIGNED AND STAMPED BY REGISTERED PROFESSIONAL ENGINEER (CIVIL ENGINEER) IN THE STATE OF CALIFORNIA SHALL BE SUBMITTED TO COR FOR REVIEW AND APPROVAL.
3. SEE ARCHITECTURAL DRAWINGS FOR STAIR LOCATIONS, DIMENSIONS AND DETAILS.

STEEL DECK

1. STEEL DECK SHALL CONFORM TO ASTM A653 WITH A MINIMUM YIELD STRESS OF 38 KSI. GALVANIZED PER ASTM A653. COATING CLASS G-90.
2. STEEL DECKING SHALL REST TIGHTLY UPON THE TOP FLANGE OF THE SUPPORTING MEMBERS.
3. STEEL DECK MATERIAL AND INSTALLATION SHALL MEET THE REQUIREMENTS OF THE STEEL DECK INSTITUTE'S DESIGN MANUAL.
4. ALL DECKING MATERIAL AND THE FLANGES OF SUPPORTING MEMBERS SHALL BE FREE OF DIRT, SAND, AND OTHER FOREIGN MATERIALS.
5. WATER ON THE DECK OR BETWEEN THE DECK AND SUPPORTING MEMBERS SHALL BE REMOVED BEFORE WELDING.
6. THE STEEL DECK MANUFACTURER SHALL PROVIDE AT LEAST THE FOLLOWING:
    A. SUPPORTS FOR DECK AROUND DISCONTINUITIES.
    B. CLOSURE ANGLES AND DECK REINFORCEMENT AT OPENINGS FOR COLUMNS, BEAM POCKETS, PIPES, DUCTS, CONDUITS, ETC.
7. ALL STEEL DECK SHALL BE CONTINUOUS OVER 2 OR MORE SUPPORTS FOR SPANS LESS THAN 6'-0" AND CONTINUOVER 3 OR MORE SUPPORTS FOR SPANS GREATER THAN OR EQUAL TO 6'-0" UNLESS NOTED OTHERWISE.
8. PIPING, CONDUITS, DUCTWORK AND EQUIPMENT SHALL NOT BE SUSPENDED FROM ROOF METAL DECK.

CODES AND STANDARDS

2010 CALIFORNIA BUILDING CODE.

ASCE 7-05, MINIMUM DESIGN LOADS FOR BUILDING AND OTHER STRUCTURES.

ACI 318-08, AMERICAN CONCRETE INSTITUTE, BUILDING CODE REQUIREMENTS FOR STRUCTURAL CONCRETE.

AMERICAN INSTITUTE OF STEEL CONSTRUCTION INC., THIRTEENTH EDITION.

2005 SEISMIC PROVISIONS FOR STRUCTURAL STEEL BUILDINGS (AISC 341-05).

AWS D1.1 2010

POST-INSTALLED CONCRETE ANCHOR

CHEMICALLY BONDED ANCHORS:

1. ALL HOLES FOR POST-INSTALLED ANCHORS SHALL BE DRILLED, CLEANED AND PREPARED IN ACCORDANCE WITH MANUFACTURER'S RECOMMENDATIONS AND THE APPLICABLE ICC-ESR. WHERE AN ANCHOR DOES NOT SET PROPERLY, OR FAILS A TENSION TEST, OR REINFORCEMENT IS ENCOUNTERED DURING DRILLING, THE DRILLED HOLE SHALL NOT BE REUSED. ABANDONED HOLES SHALL BE FILLED WITH NON-SHRINK GROUT. THE MINIMUM SPACING BETWEEN AN ABANDONED HOLE AND A DRILLED HOLE USED FOR A POST-INSTALLED ANCHOR SHALL NOT BE LESS THAN 1-1/2" ANCHOR DIAMETERS UNLESS OTHERWISE APPROVED BY THE COR. IF THE ANCHOR OR DOWEL MAY NOT BE SHIFTED AS NOTED ABOVE, THE ENGINEER OF RECORD WILL DETERMINE A NEW LOCATION. LOCATE REINFORCEMENT, AVOID CUTTING (E) REBAR AND CONFIRM FINAL LOCATIONS PRIOR TO FABRICATING PLATES, MEMBERS, OR OTHER STEEL ASSEMBLIES ATTACHED WITH ADHESIVE ANCHORS.
2. COMPLY WITH 2010 CBC AND SHALL HAVE ESR REPORT NUMBER.
3. ADHESIVE ANCHOR SHALL BE INSTALLED IN ACCORDANCE WITH MANUFACTURERS RECOMMENDATION & REQUIREMENT & THE PRODUCT ICC REPORT.
4. SPECIAL INSPECTION OF ADHESIVE ANCHOR SHALL BE IN ACCORDANCE WITH CBC SECTION 1701. ITEMS TO BE REPORTED ARE:
    a. ADHESIVE PRODUCT INCLUDING THE NAME AND EXPIRATION DATE.
    b. ANCHOR BOLT OR REBAR MATERIAL, GRADE DIAMETER, LENGTH & CLEANLINESS.
    c. DRILL BIT DIAMETER.
    d. HOLE DEPTH AND CLEANLINESS.
5. THE TESTING OF POST-INSTALLED ANCHOR SHALL BE DONE IN THE PRESENCE OF THE SPECIAL INSPECTOR AND A REPORT OF THE TEST RESULT SHALL BE SUBMITTED TO THE COR.
6. POST-INSTALLED ANCHOR HAVE CONTINUOUS INSPECTION AS EXPLAINED IN CBC 2010 SECTION 1702.1.
7. TENSION TEST IS REQUIRED ON 20% OF ALL BOLTS FOR EACH CONNECTION PLATE. IF ANY BOLT FAILS THE TEST, 100% OF THE BOLTS SHALL BE TESTED. TEST LOCATIONS SHALL BE SELECTED BY THE CONTRACTING OFFICER. SEE TABLE BELOW FOR TENSION TEST LOADS.
8. ADHESIVE EPOXY ANCHOR BOLTS: HILTI HIT-RE 500 SD (ICC-ES ESR 2322), OR APPROVED EQUAL.

TENSION TEST LOADS (POUNDS)

NOMINAL ANCHOR DIAMETER	EMBEDMENT DEPTH, hef (INCHES)	NORMAL WEIGHT CONCRETE f'c=4000 psi
1/2"	6	9880
5/8"	8, 10, 12	11750
3/4"	10, 12	13780
1"	10, 12	17400
1" ASTM 193-B7	15	19830

REGISTERED PROFESSIONAL ENGINEER AZITA FIROUZI No. 3535 STRUCTURAL STATE OF CALIFORNIA

ABBREVIATIONS

ADD'L	ADDITIONAL	GRTG	GRATING
ACI	AMERICAN CONCRETE INSTITUTE	HOR	HORIZONTAL
AISC	AMERICAN INSTITUTE OF STEEL CONSTRUCTION	HT	HEIGHT
ANSI	AMERICAN NATIONAL STANDARDS INSTITUTE	HS	HIGH STRENGTH
AB	ANCHOR BOLT	JT	JOINT
AL	ALUMINUM	LLH	LONG LEG HORIZONTAL
∠	ANGLE	LLV	LONG LEG VERTICAL
B. PL	BASE PLATE	MAX	MAXIMUM
BOTT	BOTTOM	MIN	MINIMUM
CHKD	CHECKERED	N.S	NEAR SIDE
CLG	CEILING	NTS	NOT TO SCALE
CONC	CONCRETE	OC	ON CENTER
CONST JT	CONSTRUCTION JOINT	OSL	OUTSTANDING LEG
CJ	CONTROL JOINT	OPP	OPPOSITE
CL	CENTERLINE	OVS	OVERSIZED
CONT	CONTINUOUS	PL	PLATE
COR	CONTRACTING OFFICER REPRESENTATIVE	PSF	POUNDS PER SQUARE FOOT
DIA	DIAMETER	PC	PRECAST
DOT	DIRECTION OF TRAVEL	PS	PRESTRESSED
(E)	EXISTING	REF	REFERENCE
EW	EACH WAY	RET	RETURN
ER	EXISTING TO REMAIN	RO	ROUGH OPENING
EL OR ELEV	ELEVATION	STD	STANDARD
EQ	EQUAL	STIFF	STIFFENER
FLR	FLOOR	STL	STEEL
FS	FAR SIDE	SWGR	SWTICHGEAR
FTG	FOOTING	T&B	TOP AND BOTTOM
FRMG	FRAMING	TOC	TOP OF CONCRETE
GALV	GALVANIZED	TOS	TOP OF STEEL
G.L.	GIRT LINE	TS	TUBE STEEL
DL	DEAD LOAD	TYP	TYPICAL
LL	LINE LOAD	UNO	UNLESS NOTED OTHERWISE
		VERT	VERTICAL
		W/	WITH
		WP	WORKING POINT

ROUGH CARPENTRY

1. GENERAL

1.1 UNLESS OTHERWISE NOTED, CARPENTRY CONSTRUCTION SHALL MEET THE 2010 C.B.C. CHAPTER 23.

1.2 ALL WOOD MATERIAL SHALL BE PROTECTED FROM WEATHER, SOIL, AND DAMAGE DURING DELIVERY, STORAGE, AND CONSTRUCTION.

2. PRODUCTS

2.1 LUMBER SHALL BE SEASONED (MOISTURE CONTENT LESS THAN 19%) AND SURFACED FOUR SIDES.

2.2 UNLESS OTHERWISE NOTED, GRADES OF LUMBER SHALL BE AS FOLLOWS:

CATEGORIES (BY GRADING RULES #16) GRADE

SILL PLATE .....PRESSURE TREATED DOUGLAS FIR LARCH No.1
STRUCTURAL LIGHT FRAMING .....DOUGLAS FIR LARCH, NO. 1
STUDS, TOP PLATES, BLOCKING.....DOUGLAS FIR LARCH, NO.1 STUD
STRUCTURAL JOISTS AND PLANKS .....DOUGLAS FIR LARCH, NO. 1

2.3 BOLTS AND NUTS SHALL BE CARBON STEEL, GALVANIZED, CONFORMING TO ASTM A307, GRADE A.

2.4 ALL MEMBERS NOT RESTING ON OR FRAMING OVER THEIR SUPPORTING MEMBERS SHALL BE SUPPORTED BY MEANS OF "SIMPSON STRONG-TIE" LIGHT-GAUGE METAL JOIST HANGERS. HANGERS SHALL COMPLY WITH AND BE NAILED IN ACCORDANCE WITH MANUFACTURER'S PRINTED INSTRUCTIONS. EQUIVALENT TYPE SIZE OF JOIST HANGERS MAY BE SUBSTITUTED, PROVIDING ICC EVALUATION REPORT CARD IS SUBMITTED TO CONTRACTING OFFICER FOR APPROVAL PRIOR TO INSTALLATION.

2.5 PLYWOOD TO BE 15/32-INCH THICK, C-D, 32/16 SPAN RATING, 5-PLY WITH EXTERIOR GLUE (EDGES BLOCKED) W/ 8d @ 6" O.C. ALL EDGES, 12" O.C. FIELD NAILING.

2.6 FRAMING HARDWARE SHALL BE AS MANUFACTURED BY "SIMPSON STRONG-TIE COMPANY, INC." OR EQUIVALENT TYPE SIZE OF JOIST HANGERS MAY BE SUBSTITUTED, PROVIDING ICC EVALUATION REPORT CARD IS SUBMITTED TO CONTRACTING OFFICER FOR APPROVAL PRIOR TO INSTALLATION. SIMPSON DESIGNATION USED IN THIS SET OF DRAWINGS.

ZONE	LETTER	DESCRIPTION	DRAWN	DATE	Approver APPRVD

REVISIONS

DRAWN F.BONALDI	DATE	Ames Research Center Moffett Field, California
DESIGNED A.FIROUZI	DATE	REPLACE ARC JET COMPLEX SVS BOILER STRUCTURAL
CHECKED A.SHAH	DATE	GENERAL NOTES & ABBREVIATIONS
A&E PM G.HITE	DATE	
NASA PM W.LEE	DATE	
REQUESTER G.RAICHE	DATE	
R&QA	DATE	
SAFETY/PSM	DATE	
SUPERVISOR S. FRANKEL	DATE	

SIZE D | CAGE CODE 25307 | A 231-1300- S001 | REV
SCALE: NOT TO SCALE | INDEX | SHEET | OF

FILE NAME: 60212932_SVS-Boiler Plant_Stru-CENTRAL.rvt 12/12/12

C:\Users\wbonald\Documents\Revit2011\60212932_SVS-Boiler Plant_Stru-CENTRAL_wbonaldi.rvt
1/28/2013 12:58:28 PM

AECOM: 60212932.0001

QUALITY CONTROL

1. INSPECTIONS AND TESTING SHALL COMPLY WITH SPECIFICATIONS.

2. ALL INSPECTIONS INCLUDING SPECIAL INSPECTIONS SHALL BE DONE BY AN INDEPENDENT QUALIFIED TESTING AGENCY AND QUALIFIED INSPECTORS AT THE EXPENSE OF THE CONTRACTOR. GOVERNMENT SHALL BE NOTIFIED IN ADVANCE TO WITNESS ALL THE TESTS. ALL TEST RESULTS DOCUMENTATIONS SHALL BE SUBMITTED TO THE COR.

3. SPECIAL INSPECTION SHALL COMPLY WITH 2010 CBC, SECTION 1701. SPECIAL INSPECTION SHALL BE PROVIDED FOR THE FOLLOWING USE:

	LIST OF SPECIAL INSPECTIONS	YES	NO	N/A
FOUNDATION:				
A.	GRADING AND FILLING AND CUT OPERATION PER SOILS REPORT	X		
B.	FILL MATERIAL ACCEPTANCE TEST, COMPACTION CONTROL	X		
	BEARING CAPACITY OF COMPACTED FILL	X		
CONCRETE:				
A.	DURING THE TAKING OF TEST SPECIMENS	X		
	PLACING OF REINFORCED CONCRETE	X		
B.	SHOTCRETE			X
C.	BOLT INSTALLED IN CONCRETE	X		
REINFORCING STEEL & PRE-STRESSING:				
A.	DURING PLACING OF REINFORCING, TENDONS & PRE-STRESSED STEEL	X		
B.	DURING STRESSING OF POST TENSIONED CONCRETE ELONGATE JACKING FORCE LIFT-OFF FOR EVERY 18TH TENDON			X
C.	SAMPLE AND TEST BAR STEEL & POST-TENSION CABLE	X		
STRUCTURAL MASONRY				
A.	DURING PREPARATION AND TAKING OF PRISM OR TEST SPECIMENS			X
B.	PLACING OF ALL MASONRY UNITS, REINFORCEMENT, GROUTING AND MASONRY PRISM TEST			X
STRUCTURAL STEEL:				
A.	MILL REPORTS AND IDENTIFICATION OF STEEL (AFADAVIT OF COMPLIANCE)	X		
B.	SAMPLING AND TESTING OF SPECIMEN	X		
WELDING:				
A.	ALL STRUCTURAL WELDING (INCLUDES DECKING AND WELDED STUDS)	X		
B.	ULTRASONIC TESTING OF FULL PENETRATION WELD CONNECTIONS AT MOMENT FRAMES, BRACED FRAMES, BEAM SPLICES, AND FIELD WELDS	X		
C.	STRUCTURAL LIGHT GAGE METAL FRAME WELDING	X		
D.	REINFORCING STEEL WELDING PER CBC 1704.4.2			X
BOLT:				
A.	HIGH STRENGTH BOLT A325SC & A490SC (TENSION VERIFICATION)	X		
B.	HIGH STRENGTH BOLT A325N & A490N (SNUG CONTACT OF PLYS)	X		
C.	EXPANSION/ ADHESIVE ANCHORS IN CONCRETE OR MASONRY INSTALLATION AND TESTING	X		
D.	ANCHOR BOLTS AT CONCRETE WALLS AND BRACED FRAMES. (BOLT INSTALLATION AND CONCRETE PLACEMENT)	X		

STRUCTURAL OBSERVATION:

STRUCTURAL OBSERVATION SHALL REQUIRED PER CBC 2010, CHAPTER 17 AS A MINIMUM, THE STRUCTURAL ENGINEER OF RECORD SHALL PERFORM STRUCTURAL OBSERVATION AT THE FOLLOWING STAGES OF CONSTRUCTION:

1. MAT FOUNDATION: PLACEMENT OF REINFORCEMENT AND ANCHOR BOLTS, BUT BEFORE PLACEMENT OF CONCRETE.

2. STEEL: AFTER STEEL ERECTION AND WELDING OF STEEL DECK.

3. AT COMPLETION OF WORK THE STRUCTURAL ENGINEER OF RECORD SHALL SUBMIT A REPORT TO COR WITH HIS/HER STAMP AND SIGNATURE ATTESTING OBSERVATION MADE. THE REPORT SHALL ALSO IDENTIFY ANY REPORTED DEFICIENCIES WHICH HAVE NOT BEEN RESOLVED.

TESTS AND INSPECTIONS

TABLE 1704.4: REQUIRED VERIFICATION AND INSPECTION OF CONCRETE CONSTRUCTION

VERIFICATION AND INSPECTION	CONTINUOUS	PERIODIC	REFERENCED STANDARD a.	IBC REFERENCE
1. INSPECTION OF REINFORCING STEEL, INCLUDING PRESTRESSING TENDONS, AND PLACEMENT.	—	X	ACI 318: 3.5, 7.1-7.7	1913.4
2. INSPECTION OF REINFORCING STEEL WELDING IN ACCORDANCE WITH TABLE 1704.3, ITEM 5B.	—	—	AWS D1.4 ACI 318: 3.5.2	—
3. INSPECTION OF BOLTS TO BE INSTALLED IN CONCRETE PRIOR TO AND DURING PLACEMENT OF CONCRETE WHERE ALLOWABLE LOADS HAVE BEEN INCREASED OR WHERE STRENGTH DESIGN IS USED.	X	—	ACI 318: 8.1.3, 21.2.8	1911.5 1912.1
4. INSPECTION OF ANCHORS INSTALLED IN HARDENED CONCRETE.	—	X	ACI 318: 3.8.6, 8.1.3, 21.2.8	1912.1
5. VERIFYING USE OF REQUIRED DESIGN MIX.	—	X	ACI 318: CH. 4, 5.2-5.4	1904.2.2, 1913.2, 1913.3
6. AT THE TIME FRESH CONCRETE IS SAMPLED TO FABRICATE SPECIMENS FOR STRENGTH TESTS, PERFORM SLUMP AND AIR CONTENT TESTS, AND DETERMINE THE TEMPERATURE OF THE CONCRETE.	X	—	ASTM C 172 ASTM C 31 ACI 318: 5.6, 5.8	1913.10
7. INSPECTION OF CONCRETE AND SHOTCRETE PLACEMENT FOR PROPER APPLICATION TECHNIQUES.	X	—	ACI 318: 5.9, 5.10	1913.6, 1913.7, 1913.8
8. INSPECTION FOR MAINTENANCE OF SPECIFIED CURING TEMPERATURE AND TECHNIQUES.	—	X	ACI 318: 5.11-5.13	1913.9
9. INSPECTION OF PRESTRESSED CONCRETE:				
A. APPLICATION OF PRESTRESSING FORCES.	X	—	ACI 318: 18.20 ACI 318: 18.18.4	—
B. GROUTING OF BONDED PRESTRESSING TENDONS IN THE SEISMIC- FORCE-RESISTING SYSTEM.	X			
10. ERECTION OF PRECAST CONCRETE MEMBERS.	—	X	ACI 318: CH. 16	—
11. VERIFICATION OF IN-SITU CONCRETE STRENGTH, PRIOR TO STRESSING OF TENDONS IN post tensioned CONCRETE AND PRIOR TO REMOVAL OF SHORES AND FORMS FROM BEAMS AND STRUCTURAL SLABS.	—	X	ACI 318: 6.2	—
12. INSPECT FRAMEWORK FOR SHAPE, LOCATION AND DIMENSIONS OF THE CONCRETE MEMBER BEING FORMED	—	X	ACI 318: 6.1.1	—

a. WHERE APPLICABLE, SEE ALSO SECTION 1707.1 OF CBC 2010, SPECIAL INSPECTION FOR SEISMIC RESISTANCE

TABLE 1704.7: REQUIRED VERIFICATION AND INSPECTION OF SOILS

VERIFICATION AND INSPECTION TASK	CONTINUOUS DURING TASK LISTED	PERIODICALLY DURING TASK LISTED
1. VERIFY MATERIALS BELOW FOOTINGS ARE ADEQUATE TO ACHIEVE THE DESIGN BEARING CAPACITY.	—	X
2. VERIFY EXCAVATIONS ARE EXTENDED TO PROPER DEPTH AND HAVE REACHED PROPER MATERIAL.	—	X
3. PERFORM CLASSIFICATION AND TESTING OF CONTROLLED FILL MATERIALS	—	X
4. VERIFY USE OF PROPER MATERIALS, DENSITIES AND LIFT THICKNESSES DURING PLACEMENT AND COMPACTION OF CONTROLLED FILL.	X	—
5. PRIOR TO PLACEMENT OF CONTROLLED FILL, OBSERVE SUBGRADE AND VERIFY THAT SITE HAS BEEN PREPARED PROPERLY.	—	X

TABLE 1704.3: VERIFICATION AND SPECIAL INSPECTION OF STEEL ELEMENTS OF BUILDING

VERIFICATION AND INSPECTION	CONTINUOUS	PERIODIC	REFERENCED STANDARD a.	IBC REFERENCE
1. MATERIAL VERIFICATION OF HIGH-STRENGTH BOLTS, NUTS AND WASHERS:				
A. IDENTIFICATION MARKINGS TO CONFORM TO ASTM STANDARDS SPECIFIED IN THE APPROVED CONSTRUCTION DOCUMENTS. CONSTRUCTION DOCUMENTS.	—	X	APPLICABLE ASTM MATERIAL SPECIFICATIONS; AISC 360, SECTION A3.3	—
B. MANUFACTURER'S CERTIFICATE OF COMPLIANCE REQUIRED.	—	X	—	—
2. INSPECTION OF HIGH-STRENGTH BOLTING:				
A. SNUG-TIGHT	—	X	AISC 360, SECTION M2.5	1704.3.3
B. BEARING TYPE CONNECTIONS.	—	X		
C. SLIP-CRITICAL CONNECTIONS.	X	—		
3. MATERIAL VERIFICATION OF STRUCTURAL STEEL AND COLD-FOMED STEEL DECK				
A. FOR STRUCTURAL STEEL, IDENTIFICATION MARKINGS TO CONFORM TO AISC 360.	—	X	AISC 360, SECTION M5.5	
B. FOR OTHER STEEL IDENTIFICATION MARKINGS TO CONFORM TO ASTM STANDARDS SPECIFIED IN THE APPROVED CONSTRUCTION DOCUMENTS.	—	X	APPLICABLE ASTM MATERIAL STANDARD	
C. MANUFACTURERS' CERTIFIED TEST REPORTS.		X		
4. MATERIAL VERIFICATION OF WELD FILLER MATERIALS:				
A. IDENTIFICATION MARKINGS TO CONFORM TO AWS SPECIFICATION IN THE APPROVED CONSTRUCTION DOCUMENTS.	—	—	AISC 360, SECTION A3.5	—
B. MANUFACTURER'S CERTIFICATE OF COMPLIANCE REQUIRED.	—	—	—	—
5. INSPECTION OF WELDING:				
A. STRUCTURAL STEEL AND COLD FORMED STEEL DECK:	—	—		
1) COMPLETE AND PARTIAL PENETRATION GROOVE WELDS.	X	—	AWS D1.1	1704.3.1
2) MULTIPASS FILLET WELDS	X	—		
3) SINGLE-PASS FILLET WELDS > 5/16"	X	—		
4) PLUG AND SLOT WELDS	X			
5) SINGLE-PASS FILLET WELDS <= 5/16"	—	X		
6) FLOOR AND ROOF DECK WELDS.	—	X		
B. REINFORCING STEEL:	—	—	AWS D1.3	—
1) VERIFICATION OF WELDABILITY OF REINFORCING STEEL OTHER THAN ASTM A 706	—	X	AWS D1.4 ACI 318: 3.5.2	—
2) REINFORCING STEEL-RESISTING FLEXURAL AND AXIAL FORCES IN INTERMEDIATE AND SPECIAL MOMENT FRAMES, AND BOUNDARY ELEMENTS OF SPECIAL REINFORCED CONCRETE SHEAR WALLS AND SHEAR REINFORCEMENT.	X	—		
3) SHEAR REINFORCEMENT.	X	—		
4) OTHER REINFORCING STEEL.	—	X		
6. INSPECTION OF STEEL FRAME JOINT DETAILS FOR COMPLIANCE WITH APPROVED CONSTRUCTION DOCUMENTS:		X	—	1704.3.2
A. DETAILS SUCH AS BRACING AND STIFFENING.	—	—		
B. MEMBER LOCATIONS	—	—		
C. APPLICATION OF JOINT DETAILS AT EACH CONNECTION	—			

a. WHERE APPLICABLE, SEE ALSO SECTION 1707.1 OF CBC 2010 SPECIAL INSPECTION FOR SEISMIC RESISTANCE

REGISTERED PROFESSIONAL ENGINEER ALITA FIROUZI No. 3535 STRUCTURAL STATE OF CALIFORNIA

ZONE	LETTER	DESCRIPTION	DRAWN	DATE	Approver APPRVD

REVISIONS

DRAWN F.BONALDI	DATE	Ames Research Center Moffett Field, California
DESIGNED A.FIROUZI	DATE	
CHECKED N.SHAH	DATE	REPLACE ARC JET COMPLEX SVS BOILER STRUCTURAL
A&E PM G.HITE	DATE	QUALITY CONTROL, TESTS AND INSPECTIONS
NASA PM W.LEE	DATE	
REQUESTER G.RAICHE	DATE	
R&QA	DATE	
SAFETY/PSM	DATE	SIZE D · CAGE CODE 25307 · A 231-1300- S002 · REV
SUPERVISOR S. FRANKEL	DATE	SCALE: NOT TO SCALE · INDEX · SHEET · OF

FILE NAME: 60212932_SVS-Boiler Plant_Stru-CENTRAL.rvt 12/12/12

AECOM: 60212932.0001

C:\Users\wbonaldi\Documents\Revit\2011\60212932_SVS-Boiler Plant_Stru-CENTRAL_wbonaldi.rvt
1/28/2013 12:58:28 PM

DWG NO. **A231-1300- S101** | SH. | REV.

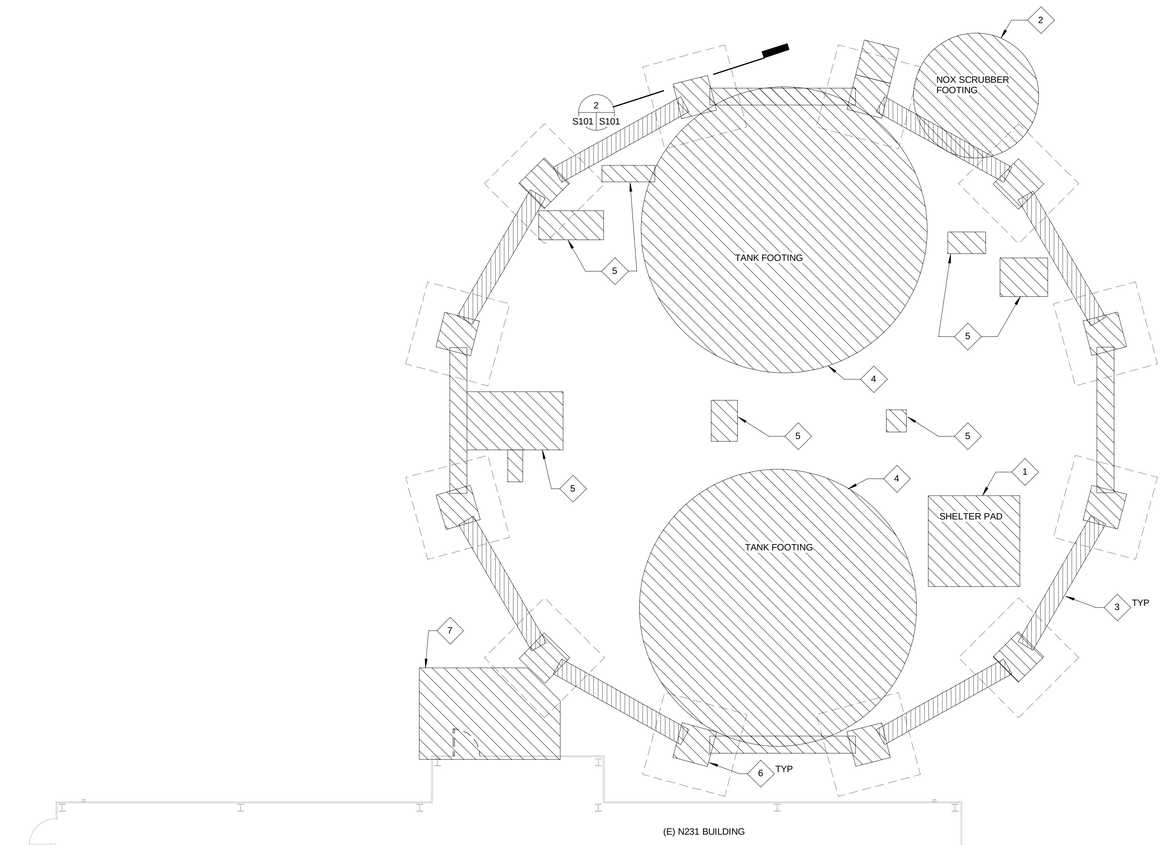

1 S101 STRUCTURAL DEMOLITION PLAN
1/8" = 1'-0" S101

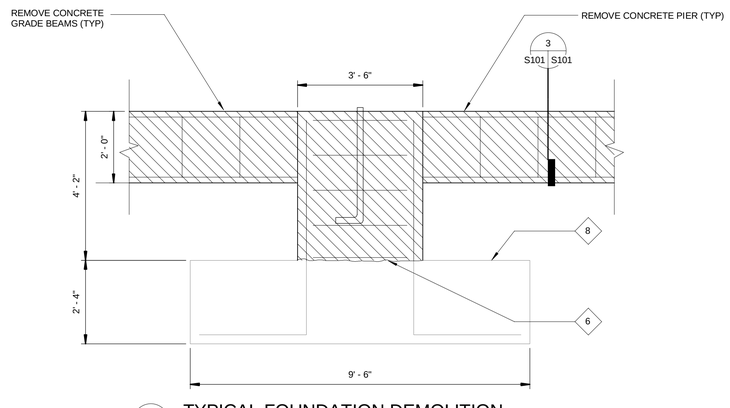

2 S101 S101 TYPICAL FOUNDATION DEMOLITION
1/2" = 1'-0"

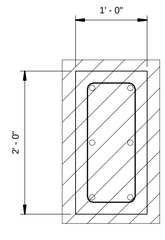

3 S101 S101 TYPICAL EXISTING TIE BEAM
1" = 1'-0"

SCALE: 1/8" = 1'-0" 8' 4' 0' 8' 24'

SHEET NOTES

1. INDICATE ITEMS TO BE REMOVED.

KEY NOTES

1. 9'-3" X 12'-3" (E) SHELTER CONCRETE PAD, 6" THICK WITH 10" THICKENED EDGE TO BE REMOVED.
2. (E) SCRUBBER TANK FOUNDATION, 14'-0" DIAMETER AND 2'-2" DEEP TO BE REMOVED.
3. (E) CONCRETE TIE BEAM TO BE REMOVED, TYP.
4. (E) 6" TANK CONCRETE PAD, 28'-4" DIAMETER WITH 1'-0" THICKENED EDGE TO BE REMOVED.
5. (E) PIPE SUPPORT & (E) MISCELLANEOUS EQUIPMENT CONCRETE PAD TO BE REMOVED.
6. REMOVE (E) 3'-6" CONCRETE PIER, ANCHOR BOLTS AND REBARS ABOVE TOP OF FOOTING. FILL AND COMPACT WITH ENGINEERING FILL SOIL ACCORDING TO SOIL REPORT RECOMMENDATIONS.
7. REMOVE (E) CONCRETE PAD IN FRONT OF N231 DOOR.
8. REMOVE PORTION OF FOOTING THAT WILL INTERFERE WITH UNDER SLAB PIPING AND CONDUIT INSTALLATION.

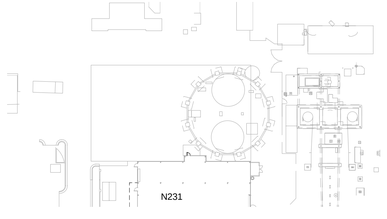

KEY PLAN

ZONE	LETTER	DESCRIPTION	DRAWN	DATE	Approver APPRVD

REVISIONS

DRAWN F.BONALDI	DATE	Ames Research Center Moffett Field, California
DESIGNED A.FIROUZI	DATE	
CHECKED N.SHAH	DATE	REPLACE ARC JET COMPLEX SVS BOILER STRUCTURAL
A&E PM G.HITE	DATE	SPHERE 6 CONCRETE DEMOLITION PLAN AND DETAILS
NASA PM W.LEE	DATE	
REQUESTER G.RAICHE	DATE	
R&QA	DATE	
SAFETY/PSM	DATE	
SUPERVISOR S. FRANKEL	DATE	

REGISTERED PROFESSIONAL ENGINEER AZITA FIROUZI No. 3535 STRUCTURAL STATE OF CALIFORNIA

SIZE	CAGE CODE		REV
D	25307	A 231-1300- S101	
SCALE: As indicated		INDEX	SHEET OF

FILE NAME: 60212932_SVS-Boiler Plant_Stru-CENTRAL.rvt 12/12/12

AECOM: 60212932.0001

C:\Users\wbonaldi\Documents\Revit\2011\60212932_SVS-Boiler Plant_Stru-CENTRAL_wbonaldi.rvt
1/29/2013 12:58:29 PM

DWG NO. **A231-1300- S102** | SH. | REV

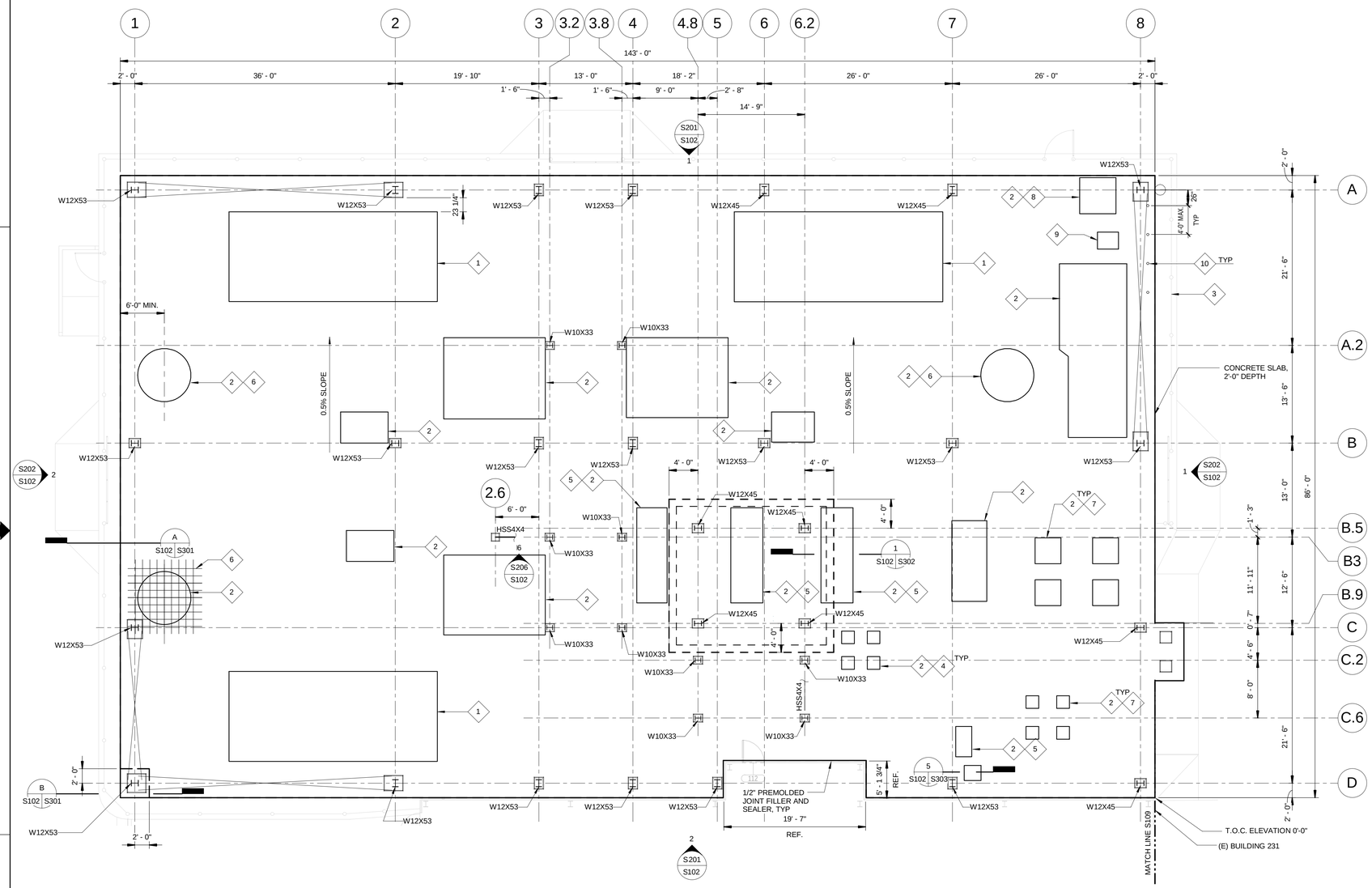

1 S102 2 FOUNDATION PLAN
1/8" = 1'-0"

N

SCALE: 1/8" = 1'-0" 8' 4' 0' 8' 24'

SHEET NOTES

1. INDICATE VERTICAL STEEL BRACING.
2. TOP OF CONCRETE FOOTING ASSUME ELEVATION 0'-0" AT LINE "D".
3. FOR LOCATION OF HOUSEKEEPING PAD & EQUIPMENT SEE MECHANICAL DRAWING.
4. BASE PLATES SHOWN ARE FOR GRAPHIC REPRESENATION. PLEASE SEE SHEETS S301 AND S302 FOR MORE INFORMATION.
5. CONTRACTOR SHALL SUBMIT SEISMIC ANCHORAGE FOR ALL DESIGN/BUILT EQUIPMENTS PRIOR TO POURING MAT FOUNDATION CONCRETE . ALL CALCULATION SHALL BE PREPARED AND STAMPED BY DESIGN PROFFESIONAL LICENSED IN STATE OF CALIFORNIA. DO NOT POUR CONCRETE PRIOR GOVERNMENT APPROVAL.
6. FOR LIST OF DESIGN/BUILD EQUIPMENT SEE NOTE 4 OF M002.
7. CONTRACTOR SHALL SUBMIT STORAGE TANK AND DEAERATOR TANK CALCULATION AND GET APPROVAL FROM GOVERNMENT PRIOR TO FABRICATING DEARATOR PLATFORM STEEL STRUCTURE.

KEY NOTES

1. BOILER HOUSEKEEPING CONCRETE PAD 12" THICK MINIMUM. TOP OF CONCRETE ELEVATION SHALL BE THE SAME FOR ALL HOUSEKEEPING PADS. SEE CONCRETE TYPICAL DETAIL ON SHEET S501 FOR DETAILS. COORDINATE LOCATION, PAD SIZES, ANCHOR BOLT SIZES AND NUMBER OF ANCHOR BOLTS WITH MANUFACTURER REQUIREMENTS.
2. EQUIPMENT HOUSEKEEPING CONCRETE PAD 6" THICK MINIMUM. TOP OF ELEVATION SHALL BE THE SAME FOR ALL HOUSEKEEPING PADS. SEE CONCRETE TYPICAL DETAIL 1 ON SHEET S501. COORDINATE LOCATION, PAD SIZES, ANCHOR BOLT SIZES AND NUMBER OF ANCHOR BOLTS WITH MANUFACTURER REQUIREMENTS.
3. FOR CHAIN LINK FENCE FOOTING SEE CIVIL DRAWINGS FOR MORE INFORMATION.
4. USE 4- 1" DIAMETER HILTI HIT-RE500 SD ADHESIVE ANCHOR, MINIMUM 18" EMBEDMENT, FOR ATTACHMENT OF BLOWOFF TANK (1 BOLT PER LEG).
5. 4- 3/4" DIAMETER ANCHOR BOLT ASSEMBLY FOR PUMP ANCHORAGE TO CONCRETE FOOTING. SEE DETAIL 4 ON SHEET S302.
6. ADDITIONAL 9 #7 BARS UNDER STACK (CENTERED AT STACK BASE PLATE) 15'-0" LONG WITH STANDARD HOOK AT EDGE OF SLAB, TYPICAL TOP AND BOTTOM OF MAT FOUNDATION. TYPICAL AT 3 PLACES UNDER STACK.
7. USE 4-5/8" DIA.HILTI HIT-RE500 SD ADHESIVE ANCHOR MIN. 14" EMBEDMENT (1 BOLT PER LEG).
8. USE 6-1" DIA. HILTI HIT-RE500 SD ADHESIVE ANCHOR, MINIMUM 16" EMBEDMENT AND MINIMUM 12" EDGE DISTANCE, FOR AMMONIA DIFFUSION TANK.
9. AMMONIA TANK HOUSEKEEPING CONCRETE PAD, 12" THICK MINIMUM. USE 4-5/8" DIA. HILTI RE-500 SD ADHESIVE ANCHOR, MINIMUM 8" EMBEDMENT AND MINIMUM 8" EDGE DISTANCE, SEE CONCRETE TYPICAL DETAIL ON SHEET S501 FOR DETAILS.
10. REMOVABLE BOLLARD, SEE DETAIL 6 ON SHEET S303.

ZONE	LETTER	DESCRIPTION	DRAWN	DATE	Approver APPRVD

REVISIONS

DRAWN F.BONALDI	DATE	Ames Research Center Moffett Field, California
DESIGNED A.FIROUZI	DATE	
CHECKED N.SHAH	DATE	
A&E PM G.HITE	DATE	REPLACE ARC JET COMPLEX SVS BOILER STRUCTURAL
NASA PM W.LEE	DATE	
REQUESTER G.RAICHE	DATE	FOUNDATION PLAN
R&QA	DATE	
SAFETY/PSM	DATE	
SUPERVISOR S. FRANKEL	DATE	

SIZE D | CAGE CODE 25307 | A 231-1300- S102 | REV
SCALE: 1/8" = 1'-0" | INDEX | SHEET | OF

FILE NAME: 60212932_SVS-Boiler Plant_Stru-CENTRAL.rvt 12/12/12

REGISTERED PROFESSIONAL ENGINEER AZITA FIROUZI No. 3535 STRUCTURAL STATE OF CALIFORNIA

AECOM: 60212932.0001

C:\Users\wbonaldi\Documents\Revit2011\60212932_SVS-Boiler Plant_Stru-CENTRAL_wbonaldi.rvt
1/28/2013 12:58:30 PM

DWG NO. **A231-1300- S103** | SH. | REV

SHEET NOTES

1. FOR STRUCTURAL TYPICAL DETAILS SEE SHEET S502.
2. INDICATE COLLECTOR & DRAG STRUT SEE SHEET S502.
3. INDICATE VERTICAL BRACING.
4. FOR SMALL ROOF OPENING SEE S503 METAL DECK TYPICAL OPENING DETAILS
5. INDICATE DIRECTION OF METAL DECK SPAN.

KEY NOTES

1. COORDINATE GAP (SPACE) BETWEEN STRUCTURAL ROOF BEAMS AND STACK WITH STACK DESIGN MANUFACTURER TO PREVENT BANGING DUE TO WIND AND SEISMIC.
2. 1 TON RATED CAPACITY MONORAIL BEAM, SEE MECHANICAL DRAWINGS.
3. LOCATE W8 AT END OF THE MONORAIL.
4. FRAMING MEMBERS FOR THE LATERAL SUPPORT FOR RELIEF DISCHARGE PIPE. CONNECT C6 TO WIDE FLANGE BEAM WITH 2-3/4" DIA. A325 BOLTS. COORDINATE LOCATION OF BEAM WITH MECHANICAL DRAWINGS. FRAME ALL FOUR SIDES OF PIPE.

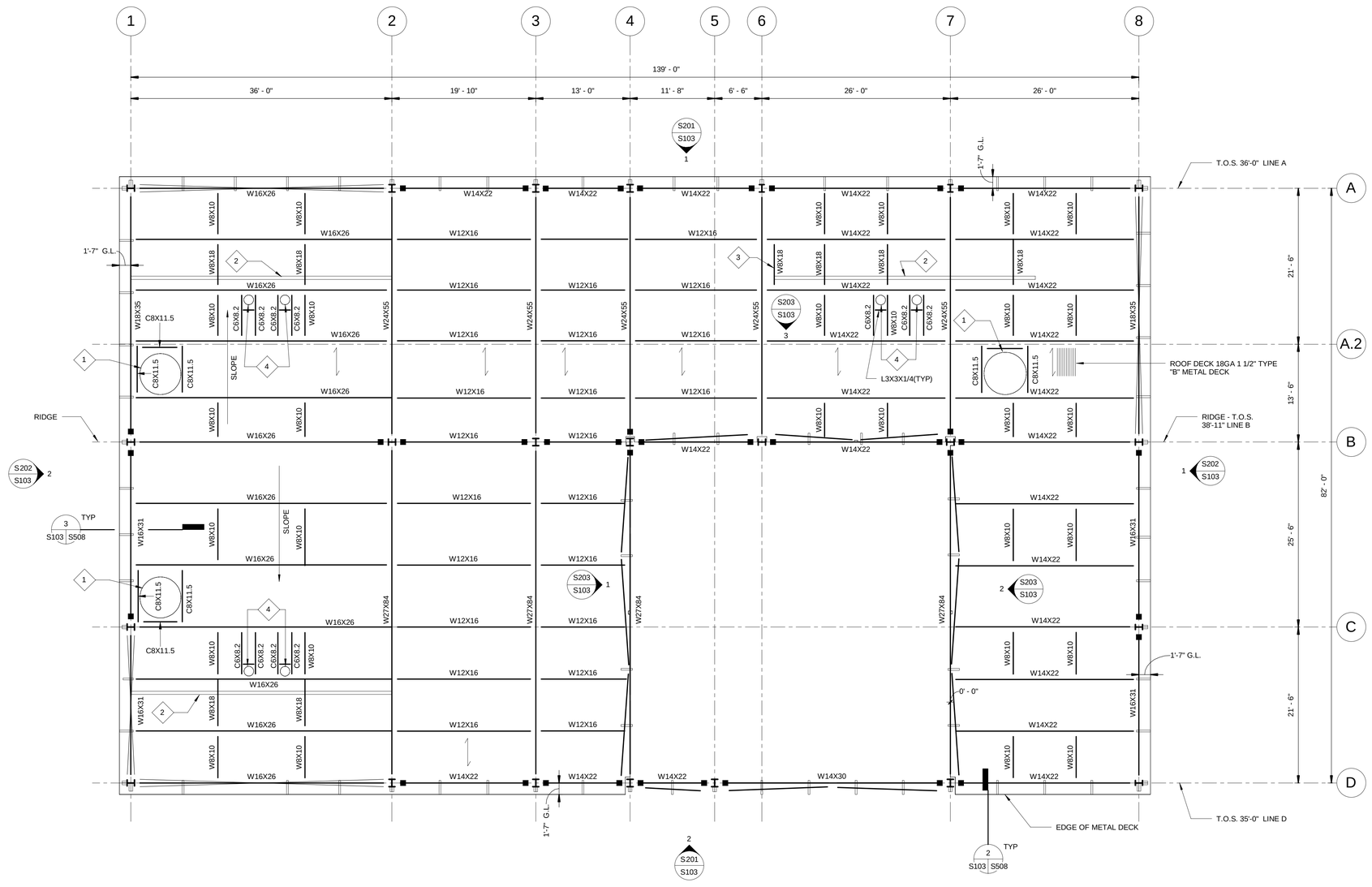

1 S103 S103 ROOF FRAMING PLAN 1/8" = 1'-0"

N

SCALE: 1/8" = 1'-0" 8' 4' 0' 8' 24'

ZONE	LETTER	DESCRIPTION	DRAWN	DATE	Approver APPRVD

REVISIONS

DRAWN F.BONALDI	DATE	Ames Research Center Moffett Field, California
DESIGNED A.FIROUZI	DATE	
CHECKED N.SHAH	DATE	REPLACE ARC JET COMPLEX SVS BOILER STRUCTURAL
A&E PM G.HITE	DATE	
NASA PM W.LEE	DATE	CANOPY ROOF FRAMING PLAN
REQUESTER G.RAICHE	DATE	
R&QA	DATE	
SAFETY/PSM	DATE	
SUPERVISOR S. FRANKEL	DATE	

REGISTERED PROFESSIONAL ENGINEER ALITA FIROUZI No. 3535 STRUCTURAL STATE OF CALIFORNIA

SIZE	CAGE CODE		REV
D	25307	A 231-1300- S103	
SCALE: 1/8" = 1'-0"	INDEX	SHEET	OF

FILE NAME: 60212932_SVS-Boiler Plant_Stru-CENTRAL.rvt 12/12/12

C:\Users\wbonaldi\Documents\Rev\2011\60212932_SVS-Boiler Plant_Stru-CENTRAL_wbonaldi.rvt 1/28/2013 12:58:30 PM

AECOM: 60212932.0001

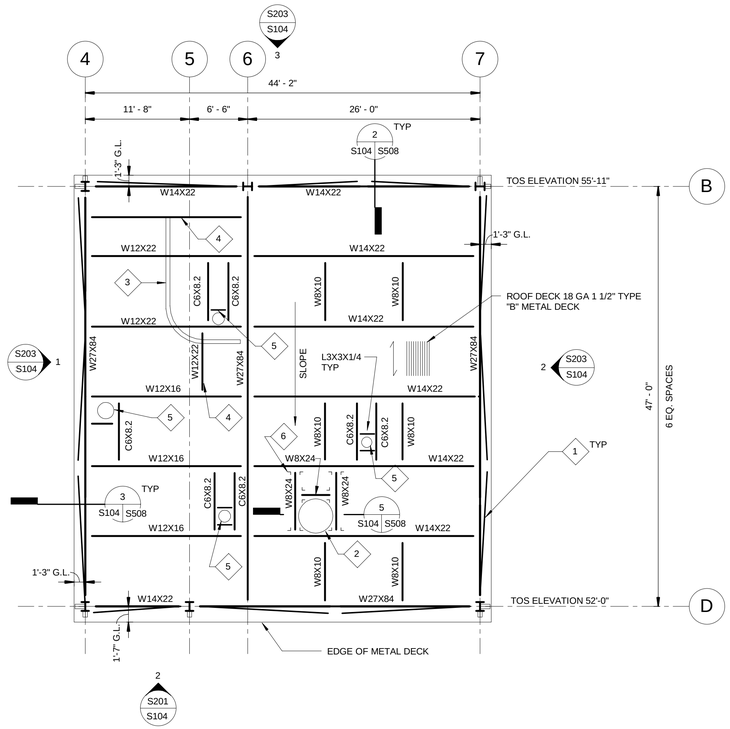

1 S104 S104 UPPER ROOF FRAMING PLAN

1/8" = 1'-0"

N

SCALE: 1/8" = 1'-0"

8' 4' 0' 8' 24'

SHEET NOTES

1. INDICATE VERTICAL BRACING.
2. FOR SMALL ROOF OPENING SEE S503 METAL DECK TYPICAL OPENING DETAILS.
3. INDICATE DIRECTION OF METAL DECK SPAN.

KEY NOTES

1. VERTICAL STEEL BRACING, SEE ELEVATION FOR MORE INFORMATION.
2. SILENCER EQUIPMENT SUPPORTED AT 4 LOCATIONS. SEE DETAIL 5 ON SHEET S508.
3. 1 TON RATED CAPACITY MONORAIL.
4. COORDINATE LOCATION OF W12X22 WITH MONORAIL MANUFACTURER TO SUPPORT MONORAIL HANGER SUPPORT.
5. FRAMING MEMBERS FOR THE LATERAL SUPPORT FOR RELIEF DISCHARGE PIPE. CONNECT C6 TO WIDE FLANGE BEAM WITH 2-3/4" DIA. A325 BOLTS. COORDINATE LOCATION OF BEAM WITH MECHANICAL DRAWINGS. FRAME ALL FOUR SIDES OF PIPE.
6. CONNECT W8 TO W14 OR TO W8 WITH 2L4X3 1/2X3/8, OSL 3 1/2" WITH 2-3/4" DIA. A325 BOLTS.

REGISTERED PROFESSIONAL ENGINEER AZITA FIROUZI No. 3535 STRUCTURAL STATE OF CALIFORNIA

ZONE	LETTER	DESCRIPTION	DRAWN	DATE	Approver APPRVD

REVISIONS

DRAWN F.BONALDI	DATE	Ames Research Center Moffett Field, California
DESIGNED A.FIROUZI	DATE	
CHECKED N.SHAH	DATE	
A&E PM G.HITE	DATE	REPLACE ARC JET COMPLEX SVS BOILER STRUCTURAL
NASA PM W.LEE	DATE	
REQUESTER G.RAICHE	DATE	CANOPY HIGH ROOF FRAMING PLAN
R&QA	DATE	
SAFETY/PSM	DATE	SIZE D / CAGE CODE 25307 / A 231-1300- S104 / REV
SUPERVISOR S. FRANKEL	DATE	SCALE: 1/8" = 1'-0" / INDEX / SHEET / OF

FILE NAME: 60212932_SVS-Boiler Plant_Stru-CENTRAL.rvt 12/12/12

AECOM: 60212932.0001

C:\Users\wbonaldi\Documents\Revit2011\60212932_SVS-Boiler Plant_Stru-CENTRAL_wbonaldi.rvt
1/28/2013 12:58:31 PM

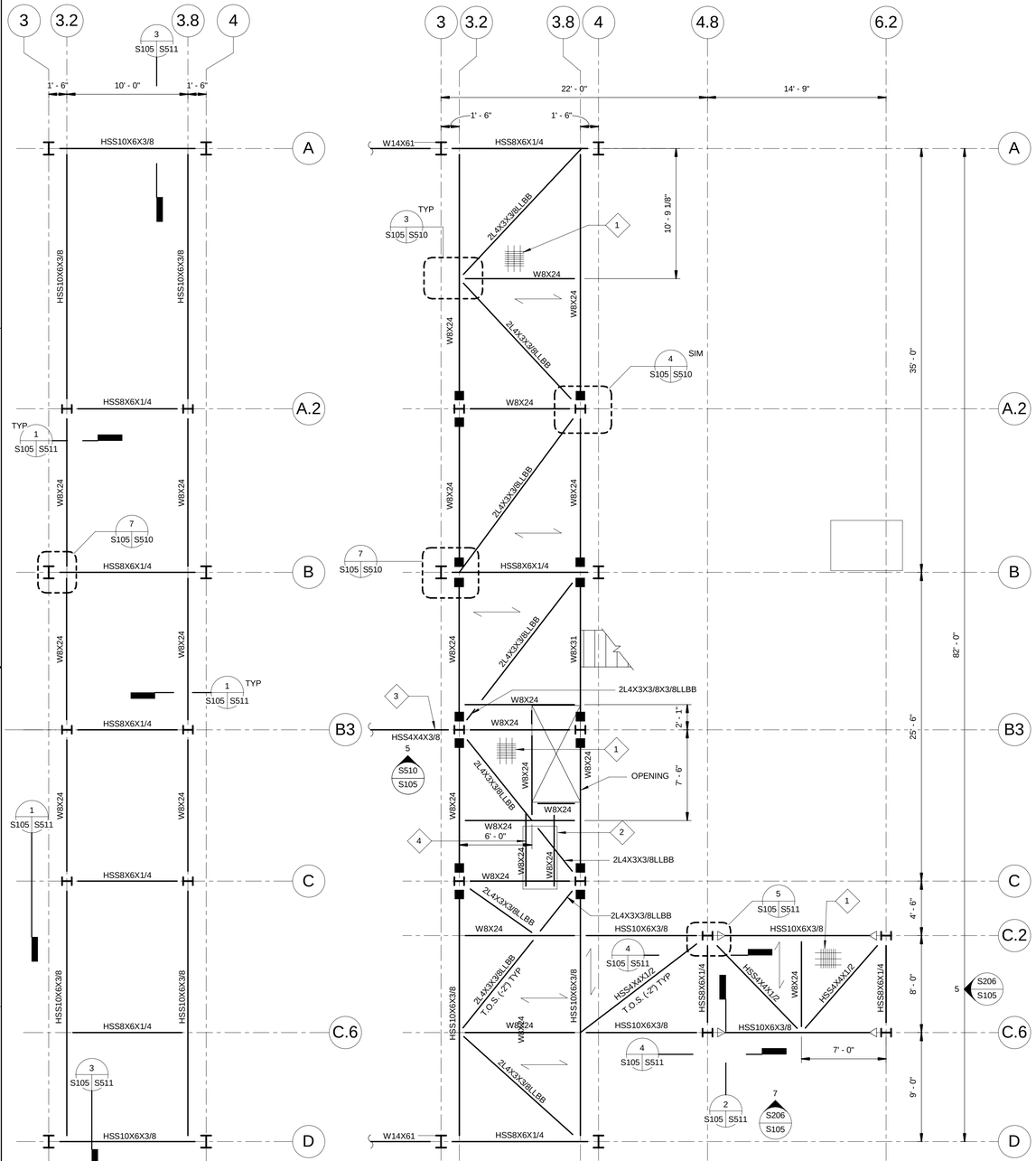

3 S105 S105 PIPE SUPPORT FRAMING T.O.S. @ 11'-6"
3/16" = 1'-0"

1 S105 S105 WALKWAY FRAMING T.O.S. @ 15'-0"
3/16" = 1'-0"

T.O.S. ELEVATION FOR HORIZONTAL BRACING 14'-10"

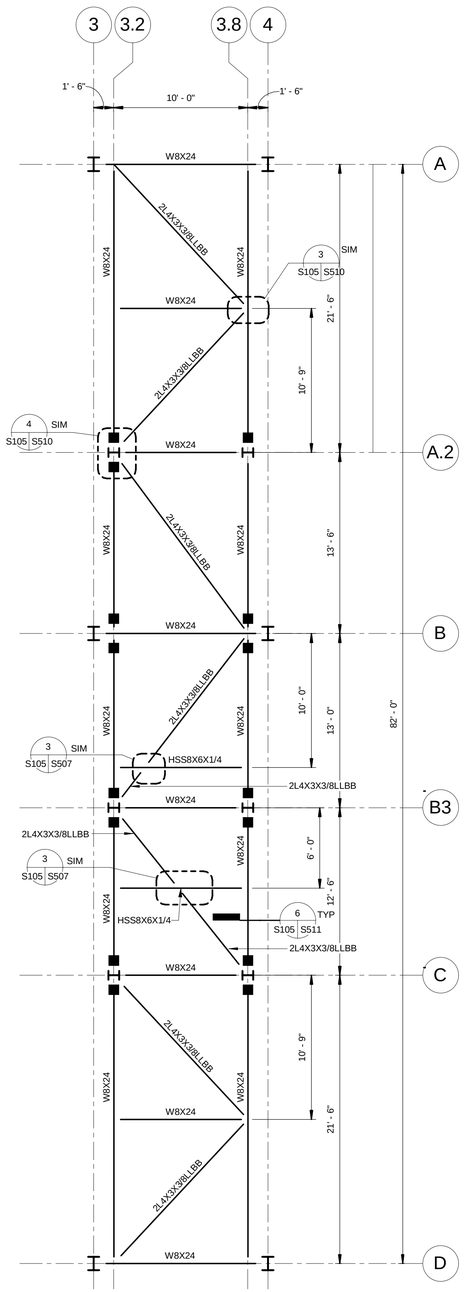

2 S105 S105 PIPE SUPPORT FRAMING T.O.S. @ 22'-10"
3/16" = 1'-0"

T.O.S. ELEVATION FOR HORIZONTAL BRACING 22'-8"

SHEET NOTES

1. FOR STRUCTURAL GENERAL NOTES SEE SHEET S001.
2. FOR STRUCTURAL TYPICAL DETAILS SEE SHEET S502.
3. INDICATE COLLECTOR & DRAG STRUT SEE SHEET S502.
4. INDICATE VERTICAL BRACING.
5. INDICATE DIRECTION OF GRATING SPAN.
6. INDICATE MOMENT CONNECTION SEE DETAIL 4 SHEET S511

KEY NOTES

1. 2 1/2" X 3/16" GALVANIZED GRATING BEARING BAR 1 3/16" O.C. & CROSS BAR @ 4" O.C.STEEL GRATING.
2. ATTACH STEAM BOILER TO THE STEEL BEAM W/ 8- 1/2" DIA. A307 BOLTS. COORDINATE LOCATION, ANCHOR BOLT SIZE AND NUMBER OF ANCHOR BOLTS WITH MANUFACTURER REQUIREMENTS.
3. KICKER BRACE TO MAT FOUNDATION.
4. W8X24 SITS ON TOP OF WALKWAY'S BEAMS.

ZONE	LETTER	DESCRIPTION	DRAWN	DATE	Approver APPRVD

REVISIONS

DRAWN F.BONALDI	DATE	Ames Research Center Moffett Field, California
DESIGNED A.FIROUZI	DATE	
CHECKED N.SHAH	DATE	REPLACE ARC JET COMPLEX SVS BOILER STRUCTURAL
A&E PM G.HITE	DATE	WALKWAY AND PIPE SUPPORT FRAMING PLANS
NASA PM W.LEE	DATE	
REQUESTER G.RAICHE	DATE	
R&QA	DATE	SIZE D · CAGE CODE 25307 · A 231-1300- S105 · REV
SAFETY/PSM	DATE	SCALE: 3/16" = 1'-0" · INDEX · SHEET · OF
SUPERVISOR S. FRANKEL	DATE	

REGISTERED PROFESSIONAL ENGINEER AZITA FIROUZI No. 3535 STRUCTURAL STATE OF CALIFORNIA

FILE NAME: 60212932_SVS-Boiler Plant_Stru-CENTRAL.rvt 12/12/12

C:\Users\wbonald\Documents\Revit\2011\60212932_SVS-Boiler Plant_Stru-CENTRAL_wbonaldi.rvt
1/29/2013 12:58:31 PM

AECOM: 60212932.0001

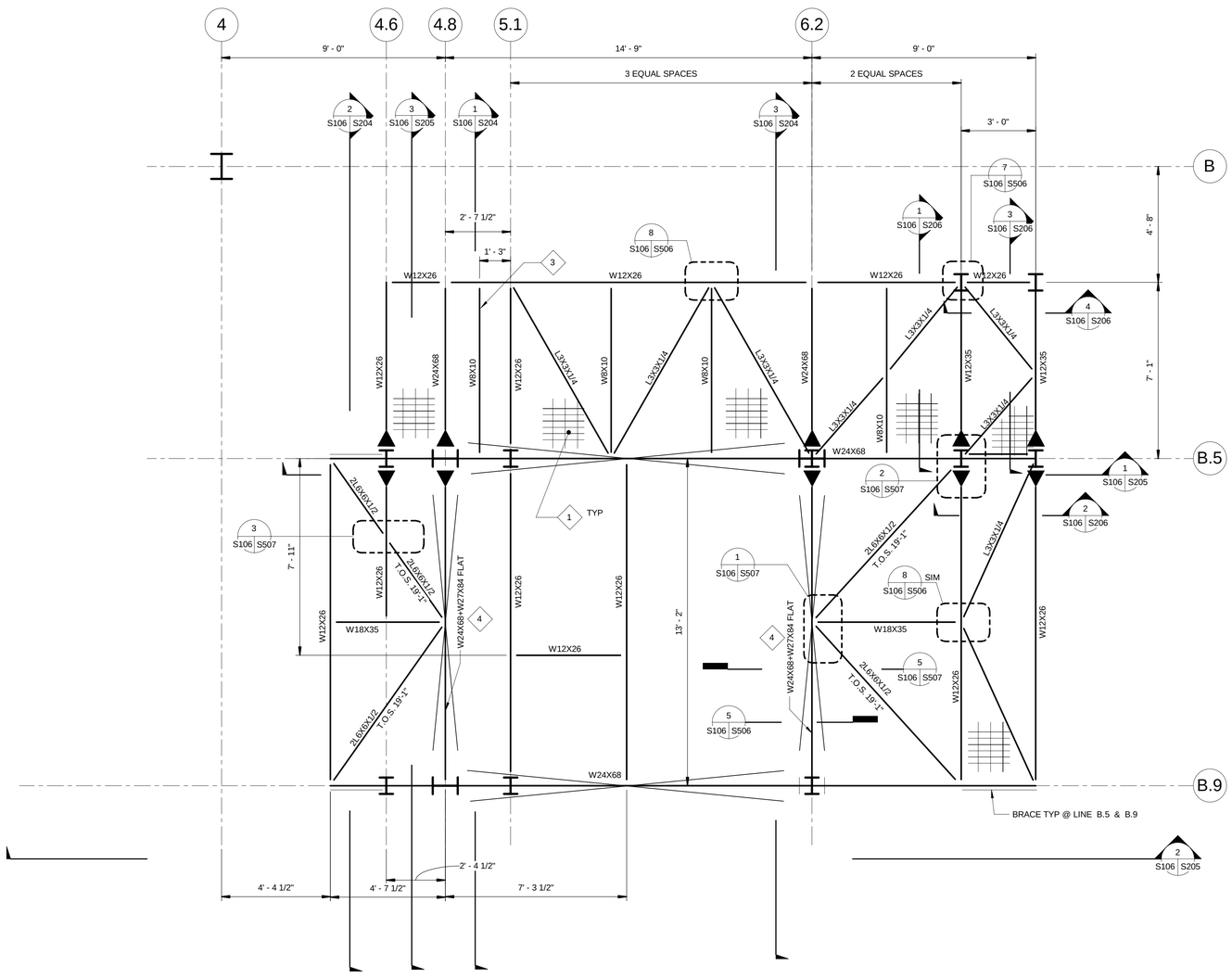

1 S106 S106 MAIN DECK - T.O.S. ELEV. 19'-7"
3/8" = 1'-0"

T.O.S. ELEVATION FOR HORIZONTAL BRACING 19'-5" U.N.O.

N

SCALE: 3/8" = 1'-0"

SHEET NOTES

1. INDICATE VERTICAL BRACING.
2. INDICATE MOMENT CONNECTION. SEE DETAIL 6 ON SHEET S502 FOR MOMENT CONNECTION AT CANTILIVER BEAM.

KEY NOTES

1. 1 1/4X3/16 @ 1 3/16 O.C. CROSS BAR @ 4" O.C. GALVANIZED STEEL GRATING.
2. NOT USED.
3. VERIFY LOCATION OF W8 WITH STAIR MANUFACTURER TO SUPPORT STRINGER.
4. W27 FLAT IS 10'-0" LONG TO SUPPORT TANK SADDLE. COORDINATE WITH TANK MANUFACTURER FOR LENGTH OF TANK SADDLE. SEE DETAIL 4 ON SHEET S507.

ZONE	LETTER	DESCRIPTION	DRAWN	DATE	Approver APPRVD

REVISIONS

DRAWN F.BONALDI DATE
DESIGNED A.FIROUZI DATE
CHECKED N.SHAH DATE
A&E PM G.HITE DATE
NASA PM W.LEE DATE
REQUESTER G.RAICHE DATE
R&QA DATE
SAFETY/PSM DATE
SUPERVISOR S. FRANKEL DATE

Ames Research Center
Moffett Field, California

REPLACE ARC JET COMPLEX SVS BOILER
STRUCTURAL

DEAERATOR FRAMING PLANS MAIN DECK

SIZE D | CAGE CODE 25307 | A 231-1300- S106 | REV
SCALE: 3/8" = 1'-0" | INDEX | SHEET | OF

FILE NAME: 60212932_SVS-Boiler Plant_Stru-CENTRAL.rvt 12/12/12

REGISTERED PROFESSIONAL ENGINEER AZITA FIROUZI No. 3535 STRUCTURAL STATE OF CALIFORNIA

C:\Users\wbonaldi\Documents\Revit2011\60212932_SVS-Boiler Plant_Stru-CENTRAL_wbonaldi.rvt
1/28/2013 12:58:32 PM

AECOM: 60212932.0001

DWG NO. **A231-1300- S107** | SH. | REV

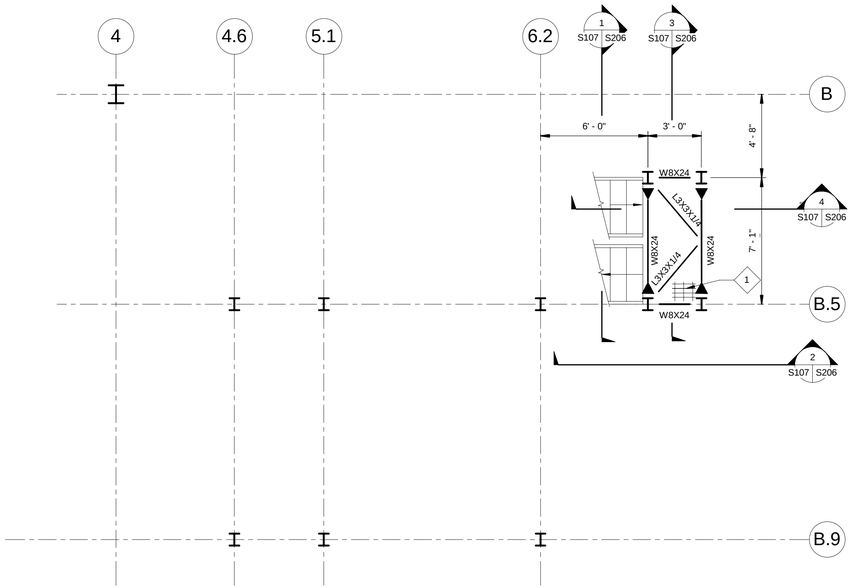

1 S107 S107 STAIR LANDING - T.O.S. ELEV. 31'-6"
1/4" = 1'-0"
T.O.S. ELEVATION FOR HORIZONTAL BRACING 31'-4"

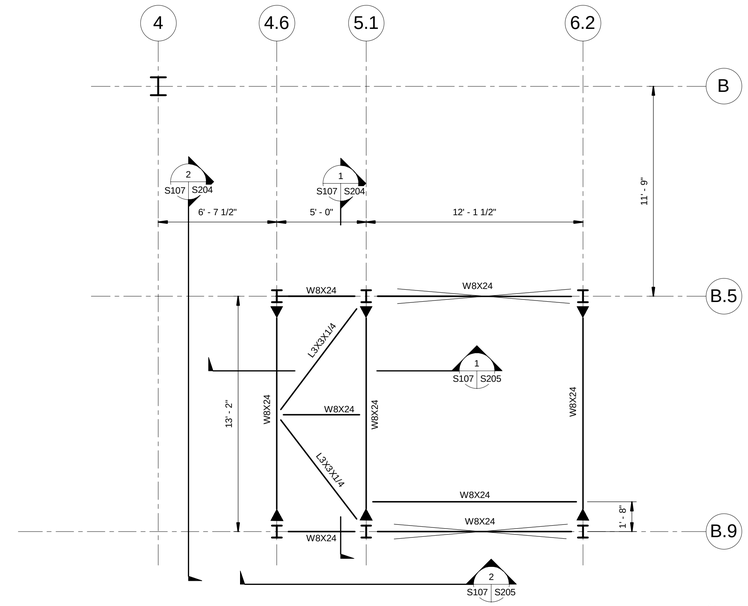

2 S107 S107 INTERMEDIATE HORIZONTAL BRACING - T.O.S. ELEV. 34'-8"
1/4" = 1'-0"
T.O.S. ELEVATION FOR HORIZONTAL BRACING 34'-6"

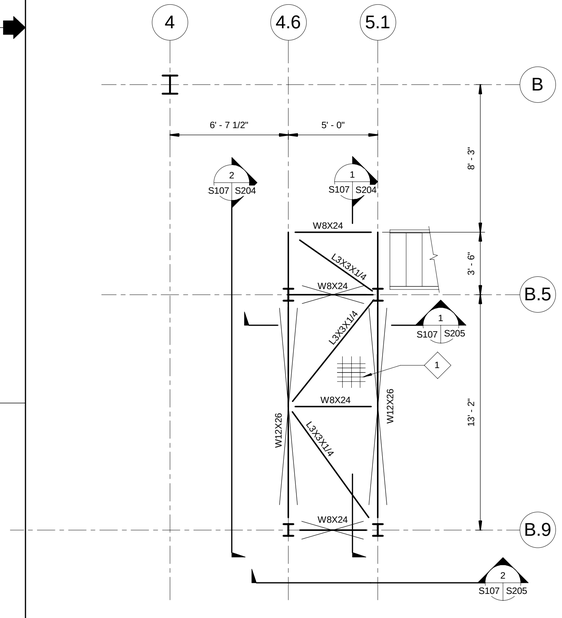

3 S107 S107 HIGH DECK - T.O.S. ELEV. 39'-2"
1/4" = 1'-0"
T.O.S. ELEVATION FOR HORIZONTAL BRACING 39'-0"

SCALE: 1/4" = 1'-0" 4' 2' 0' 4' 8'

SHEET NOTES

1. INDICATE VERTICAL BRACING.
2. INDICATE MOMENT CONNECTION. SEE DETAIL 8 ON SHEET S502 FOR MOMENT FRAME CONNECTION .

KEY NOTES

1 1 1/4" X 3/16" @ 1 3/16" O.C. CROSS BAR @ 4" O.C. GALVANIZED STEEL GRATING.

REGISTERED PROFESSIONAL ENGINEER ALITA FIROUZI No. 3535 STRUCTURAL STATE OF CALIFORNIA

ZONE	LETTER	DESCRIPTION	DRAWN	DATE	Approver APPRVD

REVISIONS

DRAWN F.BONALDI	DATE	Ames Research Center Moffett Field, California
DESIGNED A.FIROUZI	DATE	
CHECKED N.SHAH	DATE	REPLACE ARC JET COMPLEX SVS BOILER STRUCTURAL
A&E PM G.HITE	DATE	
NASA PM W.LEE	DATE	DEAERATOR FRAMING PLANS HIGH DECK
REQUESTER G.RAICHE	DATE	
R&QA	DATE	
SAFETY/PSM	DATE	SIZE D · CAGE CODE 25307 · A 231-1300- S107 · REV
SUPERVISOR S. FRANKEL	DATE	SCALE: 1/4" = 1'-0" · INDEX · SHEET · OF

FILE NAME: 60212932_SVS-Boiler Plant_Stru-CENTRAL.rvt 12/12/12

AECOM: 60212932.0001

C:\Users\wbonald\Documents\Revit\2011\60212932_SVS-Boiler Plant_Stru-CENTRAL_wbonald.rvt
1/28/2013 12:58:33 PM

DWG NO. A231-1300- S108 | SH. | REV

BID OPTION 6

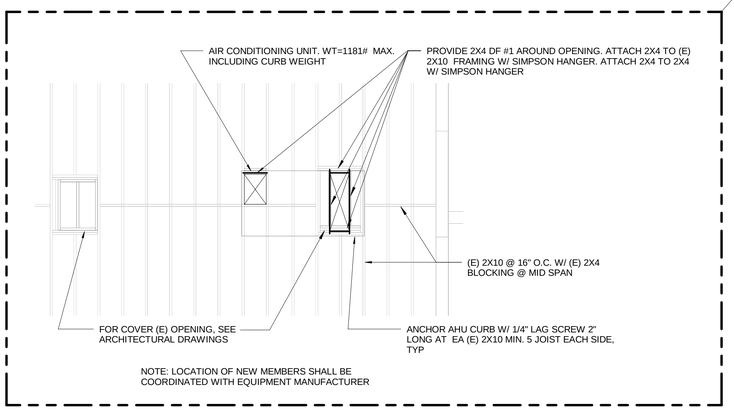

N231 PARTIAL ROOF OVER CONTROL ROOM AREA FRAMING PLAN

1 S108 | S108 1/4" = 1'-0"

SCALE: 1/4" = 1'-0" 4' 2' 0' 4' 8'

SHEET NOTES

1. FOR STRUCTURAL GENERAL NOTES SEE SHEET S001.

KEY NOTES

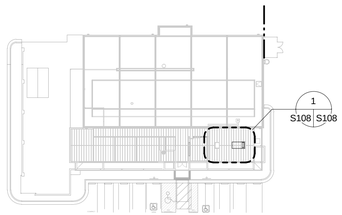

KEYPLAN N231 SCALE: 1"=40'-0"

REGISTERED PROFESSIONAL ENGINEER AZITA FIROUZ No. 3535 STRUCTURAL STATE OF CALIFORNIA

ZONE	LETTER	DESCRIPTION	DRAWN	DATE	Approver APPRVD

REVISIONS

DRAWN F.BONALDI	DATE	Ames Research Center Moffett Field, California
DESIGNED A.FIROUZI	DATE	
CHECKED N.SHAH	DATE	REPLACE ARC JET COMPLEX SVS BOILER STRUCTURAL
A&E PM G.HITE	DATE	
NASA PM W.LEE	DATE	PARTIAL ROOF FRAMING PLAN
REQUESTER G.RAICHE	DATE	
R&QA	DATE	
SAFETY/PSM	DATE	
SUPERVISOR S. FRANKEL	DATE	

SIZE	CAGE CODE		REV
D	25307	A 231-1300- S108	
SCALE: As indicated	INDEX	SHEET	OF

FILE NAME: 60212932_SVS-Boiler Plant_Stru-CENTRAL.rvt 12/12/12

AECOM: 60212932_0001

C:\Users\wbonald\Documents\Revit2011\60212932_SVS-Boiler Plant_Stru-CENTRAL_wbonaldi.rvt
1/28/2013 12:58:33 PM

DWG NO. **A231-1300- S109** | SH. | REV

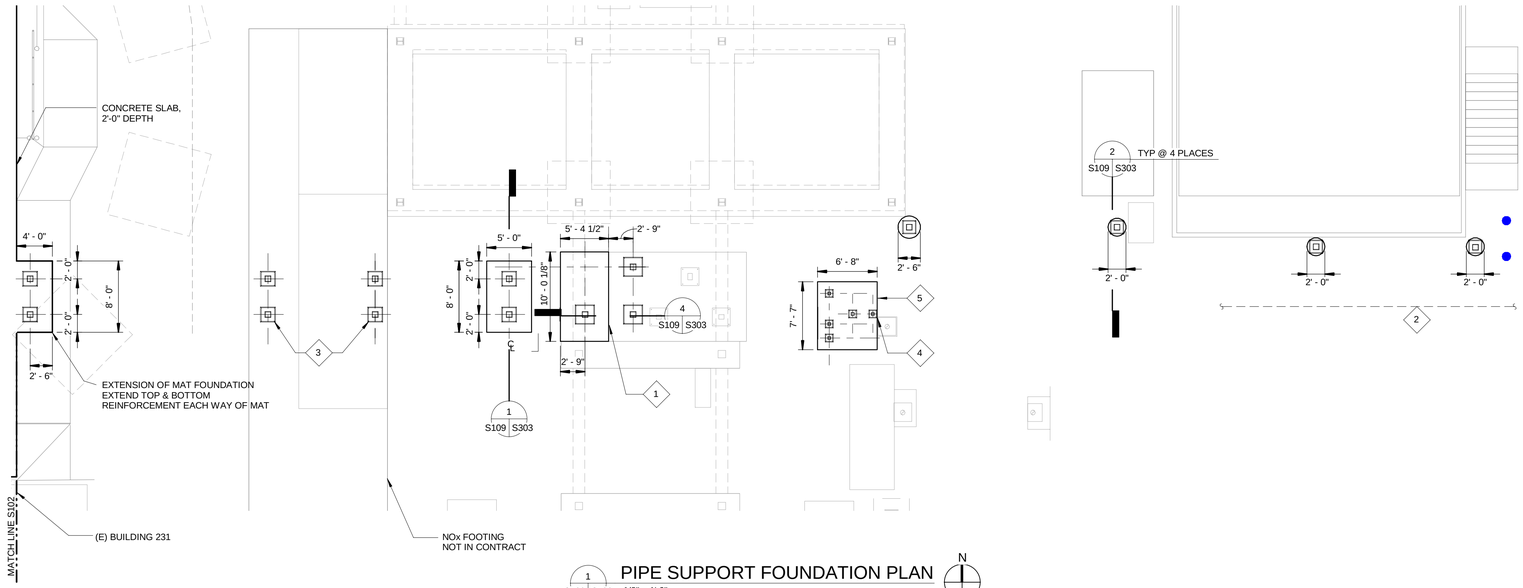

1 S109 S109 PIPE SUPPORT FOUNDATION PLAN 1/8" = 1'-0"

N

SCALE: 1/8" = 1'-0" 8' 4' 0' 8' 24'

SHEET NOTES

1. FOR STRUCTURAL GENERAL NOTES SEE SHEET S001.
2. FOR LOCATION OF PIPE SUPPORTS SEE MECHANICAL DRAWINGS.
3. FOR SIZE OF PIPE SUPPORTS, BASE PLATES AND ANCHOR BOLTS SEE MECHANICAL DRAWINGS M501, M502, M508 AND M509.

KEY NOTES

1. RELOCATE 1 1/2" CONDUIT ATTACHED TO SIDE OF FOOTING.
2. CONTRACTOR TO VERIFY LOCATION AND RELOCATE WATERLINE IN CASE OF INTERFERENCE WITH FOOTING.
3. MINIMUM ANCHOR BOLT EDGE DISTANCE SHALL BE MAINTAINED TO 21 INCHES.
4. MINIMUM ANCHOR BOLT EDGE DISTANCE SHALL BE MAINTAINED TO 4 INCHES.
5. PIPE SUPPORT FOOTING DEPTH 16" MINIMUM WITH #5 @ 12" O.C. TOP & BOTTOM EACH WAY.

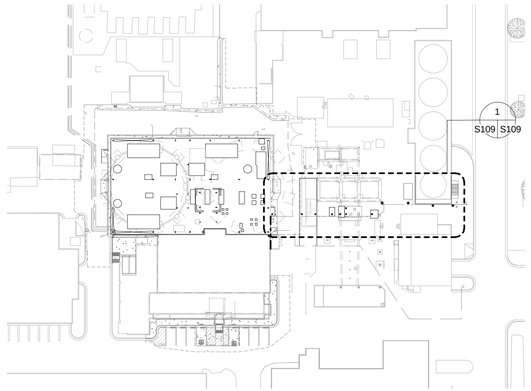

KEY PLAN

ZONE	LETTER	DESCRIPTION	DRAWN	DATE	Approver APPRVD

REVISIONS

DRAWN F.BONALDI	DATE	Ames Research Center Moffett Field, California
DESIGNED A.FIROUZI	DATE	
CHECKED N.SHAH	DATE	REPLACE ARC JET COMPLEX SVS BOILER STRUCTURAL
A&E PM G.HITE	DATE	
NASA PM W.LEE	DATE	PIPE SUPPORT FOUNDATION PLAN
REQUESTER G.RAICHE	DATE	
R&QA	DATE	SIZE D · CAGE CODE 25307 · A 231-1300- S109 · REV
SAFETY/PSM	DATE	SCALE: As indicated · INDEX · SHEET · OF
SUPERVISOR S. FRANKEL	DATE	

REGISTERED PROFESSIONAL ENGINEER AZITA FIROUZI No. 3535 STRUCTURAL STATE OF CALIFORNIA

FILE NAME: 60212932_SVS-Boiler Plant_Stru-CENTRAL.rvt 12/12/12

C:\Users\wbonaldi\Documents\Revit2011\60212932_SVS-Boiler Plant_Stru-CENTRAL_wbonaldi.rvt
1/28/2013 12:58:37 PM

AECOM: 60212932.0001

DWG NO. **A231-1300- S201** | SH. | REV

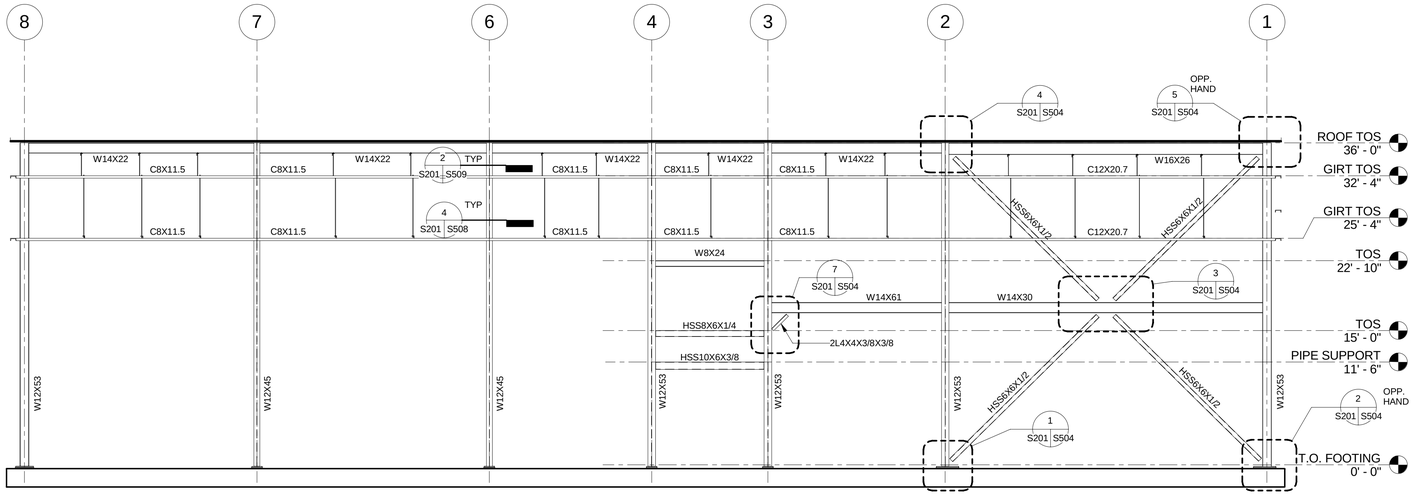

1 S103,S102 S201 CANOPY - NORTH FRAMING ELEVATION
1/8" = 1'-0"

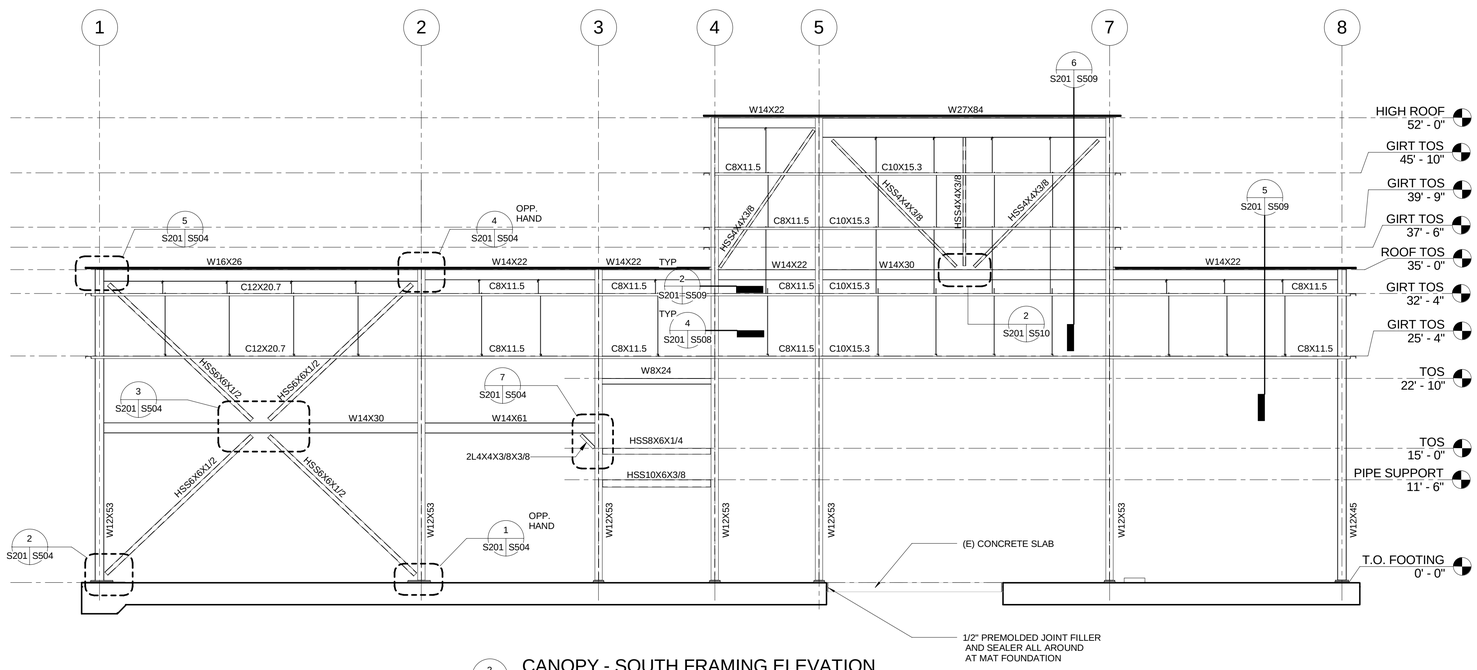

2 S104, S103,S102 S201 CANOPY - SOUTH FRAMING ELEVATION
1/8" = 1'-0"

SCALE: 1/8" = 1'-0" 8' 4' 0' 8' 24'

SHEET NOTES

1. FOR STRUCTURAL GENERAL NOTES SEE SHEET S001.
2. FOR GIRT CONNECTIONS, SEE DETAILS ON SHEET S509.

ZONE	LETTER	DESCRIPTION	DRAWN	DATE	Approver APPRVD

REVISIONS

DRAWN F.BONALDI	DATE	Ames Research Center Moffett Field, California
DESIGNED A.FIROUZI	DATE	
CHECKED N.SHAH	DATE	REPLACE ARC JET COMPLEX SVS BOILER STRUCTURAL
A&E PM G.HITE	DATE	
NASA PM W.LEE	DATE	CANOPY ELEVATIONS
REQUESTER G.RAICHE	DATE	
R&QA	DATE	
SAFETY/PSM	DATE	SIZE D · CAGE CODE 25307 · A 231-1300- S201 · REV
SUPERVISOR S. FRANKEL	DATE	SCALE: 1/8" = 1'-0" · INDEX · SHEET · OF

REGISTERED PROFESSIONAL ENGINEER AZITA FIROUZI No. 3535 STRUCTURAL STATE OF CALIFORNIA

FILE NAME: 60212932_SVS-Boiler Plant_Stru-CENTRAL.rvt 12/12/12

C:\Users\wbonaldi\Documents\Revit2011\60212932_SVS-Boiler Plant_Stru-CENTRAL_wbonaldi.rvt
1/28/2013 12:58:38 PM

AECOM: 60212932.0001

DWG NO. **A231-1300- S202** | SH. | REV

SHEET NOTES

1. FOR STRUCTURAL GENERAL NOTES SEE SHEET S001.
2. FOR GIRT CONNECTIONS, SEE DETAILS ON SHEET S509.

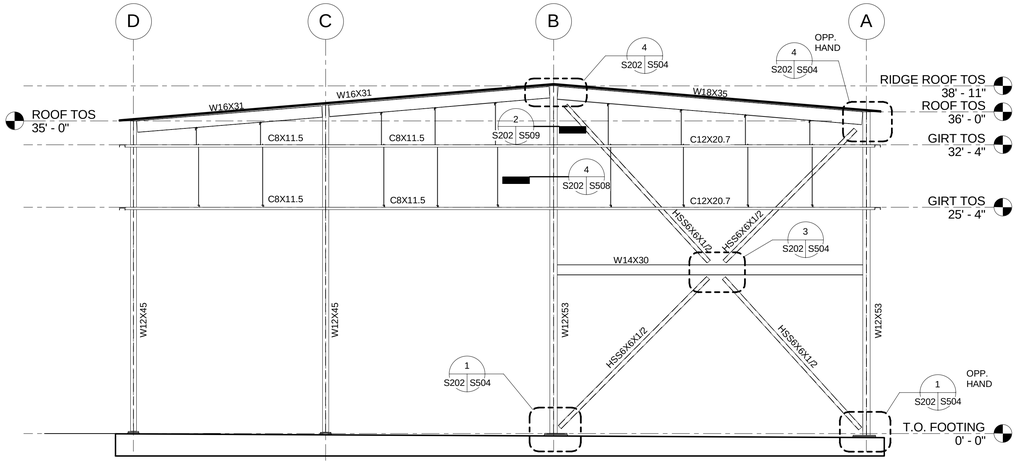

1 / S103, S102 | S202 — CANOPY - EAST FRAMING ELEVATION
1/8" = 1'-0"

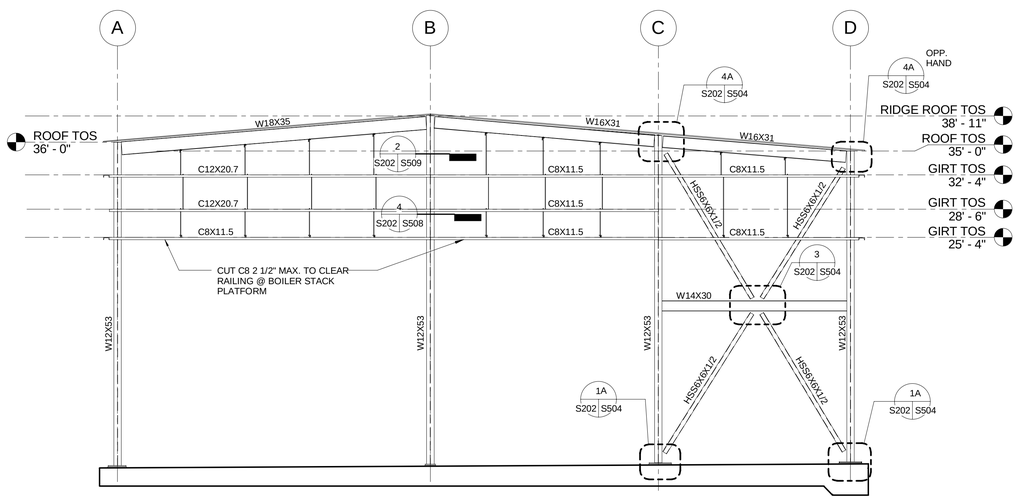

2 / S103, S102 | S202 — CANOPY - WEST FRAMING ELEVATION
1/8" = 1'-0"

SCALE: 1/8" = 1'-0" 8' 4' 0' 8' 24'

REGISTERED PROFESSIONAL ENGINEER — AZITA FIROUZ — No. 3535 — STRUCTURAL — STATE OF CALIFORNIA

ZONE	LETTER	DESCRIPTION	DRAWN	DATE	Approver APPRVD

REVISIONS

DRAWN F.BONALDI	DATE	Ames Research Center Moffett Field, California
DESIGNED A.FIROUZI	DATE	
CHECKED N.SHAH	DATE	REPLACE ARC JET COMPLEX SVS BOILER STRUCTURAL
A&E PM G.HITE	DATE	
NASA PM W.LEE	DATE	CANOPY ELEVATIONS
REQUESTER G.RAICHE	DATE	
R&QA	DATE	
SAFETY/PSM	DATE	SIZE D · CAGE CODE 25307 · A 231-1300- S202 · REV
SUPERVISOR S. FRANKEL	DATE	SCALE: 1/8" = 1'-0" · INDEX · SHEET · OF

FILE NAME: 60212932_SVS-Boiler Plant_Stru-CENTRAL.rvt 12/12/12

C:\Users\wbonald\Documents\Revit\2011\60212932_SVS-Boiler Plant_Stru-CENTRAL_wbonaldi.rvt
1/28/2013 12:58:38 PM

AECOM: 60212932.0001

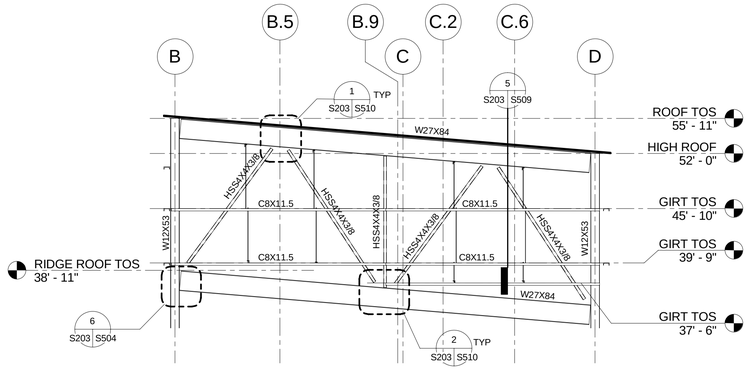

1 UPPER ROOF - WEST ELEVATION
S104, S103 S203 1/8" = 1'-0"

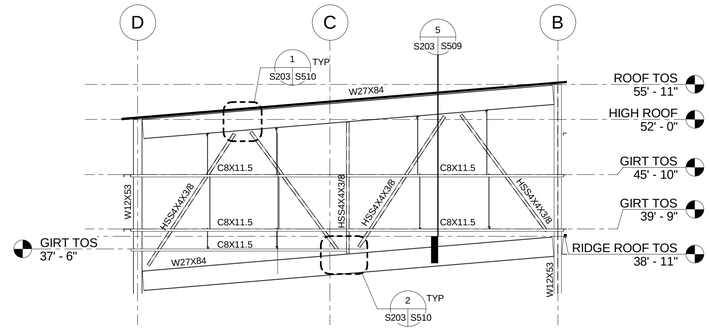

2 UPPER ROOF - EAST ELEVATION
S104, S103 S203 1/8" = 1'-0"

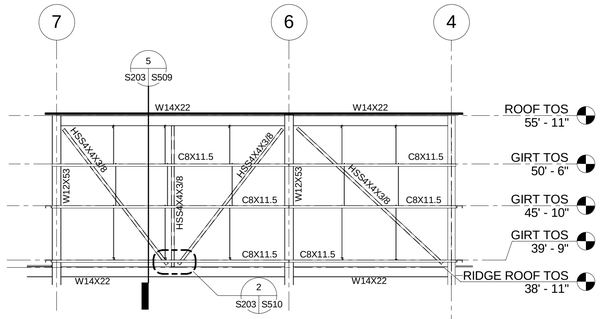

3 UPPER ROOF - NORTH ELEVATION
S104, S103 S203 1/8" = 1'-0"

SCALE: 1/8" = 1'-0"
8' 4' 0' 8' 24'

REGISTERED PROFESSIONAL ENGINEER AZITA FIROUZI No. 3535 STRUCTURAL STATE OF CALIFORNIA

ZONE	LETTER	DESCRIPTION	DRAWN	DATE	Approver APPRVD

REVISIONS

DRAWN F.BONALDI	DATE	Ames Research Center Moffett Field, California
DESIGNED A.FIROUZI	DATE	
CHECKED N.SHAH	DATE	REPLACE ARC JET COMPLEX SVS BOILER STRUCTURAL
A&E PM G.HITE	DATE	
NASA PM W.LEE	DATE	CANOPY UPPER ROOF ELEVATIONS
REQUESTER G.RAICHE	DATE	
R&QA	DATE	
SAFETY/PSM	DATE	SIZE D · CAGE CODE 25307 · A 231-1300- S203 · REV
SUPERVISOR S. FRANKEL	DATE	SCALE: 1/8" = 1'-0" · INDEX · SHEET · OF

FILE NAME: 60212932_SVS-Boiler Plant_Stru-CENTRAL.rvt 12/12/12

C:\Users\wbonald\Documents\Revit\2011\60212932_SVS-Boiler Plant_Stru-CENTRAL_wbonaldi.rvt
1/28/2013 12:58:39 PM

AECOM: 60212932.0001

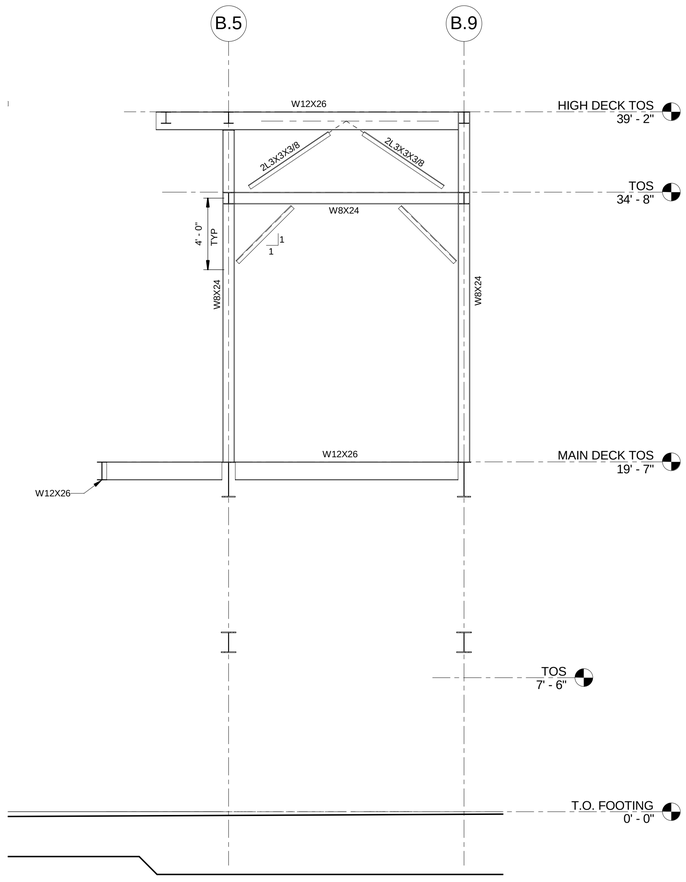

1 S107, S106 | S204 DEAERATOR PLATFORM ELEVATION @ LINE 5.1
1/4" = 1'-0"

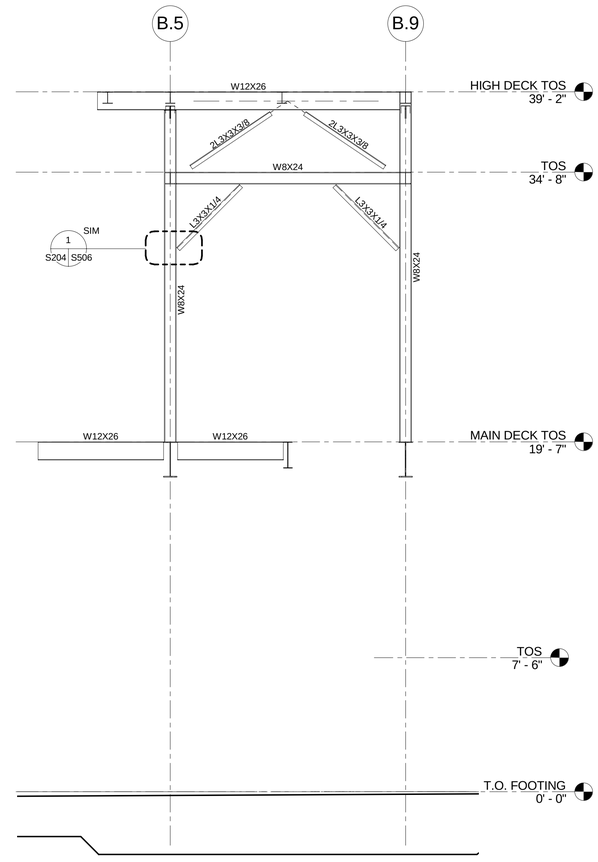

2 S107, S106 | S204 DEAERATOR PLATFORM ELEVATION @ LINE 4.6
1/4" = 1'-0"

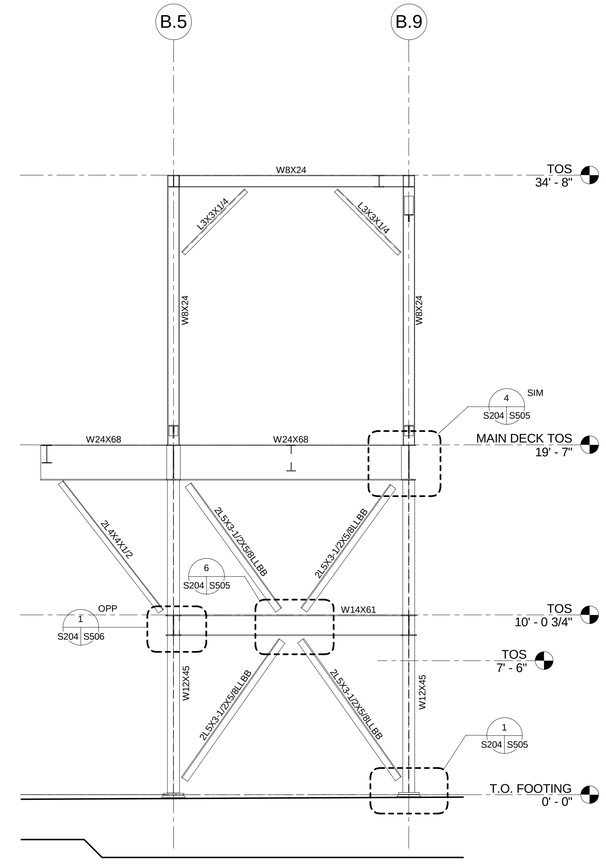

3 S106 | S204 DEAERATOR PLATFORM ELEVATION @ LINE 6.2
1/4" = 1'-0"

SCALE: 1/4" = 1'-0"
4' 2' 0' 4' 8'

REGISTERED PROFESSIONAL ENGINEER
ALITA FIROUZI
No. 3535
STRUCTURAL
STATE OF CALIFORNIA

ZONE	LETTER	DESCRIPTION	DRAWN	DATE	Approver APPRVD

REVISIONS

DRAWN F.BONALDI	DATE	Ames Research Center Moffett Field, California
DESIGNED A.FIROUZI	DATE	
CHECKED N.SHAH	DATE	
A&E PM G.HITE	DATE	REPLACE ARC JET COMPLEX SVS BOILER STRUCTURAL
NASA PM W.LEE	DATE	
REQUESTER G.RAICHE	DATE	DEAERATOR PLATFORM ELEVATIONS
R&QA	DATE	
SAFETY/PSM	DATE	
SUPERVISOR S. FRANKEL	DATE	

SIZE	CAGE CODE		REV
D	25307	A 231-1300- S204	
SCALE: 1/4" = 1'-0"		INDEX	SHEET OF

FILE NAME: 60212932_SVS-Boiler Plant_Stru-CENTRAL.rvt 12/12/12

AECOM: 60212932.0001

C:\Users\wbonaldi\Documents\Revit2011\60212932_SVS-Boiler Plant_Stru-CENTRAL_wbonaldi.rvt
1/28/2013 12:58:40 PM

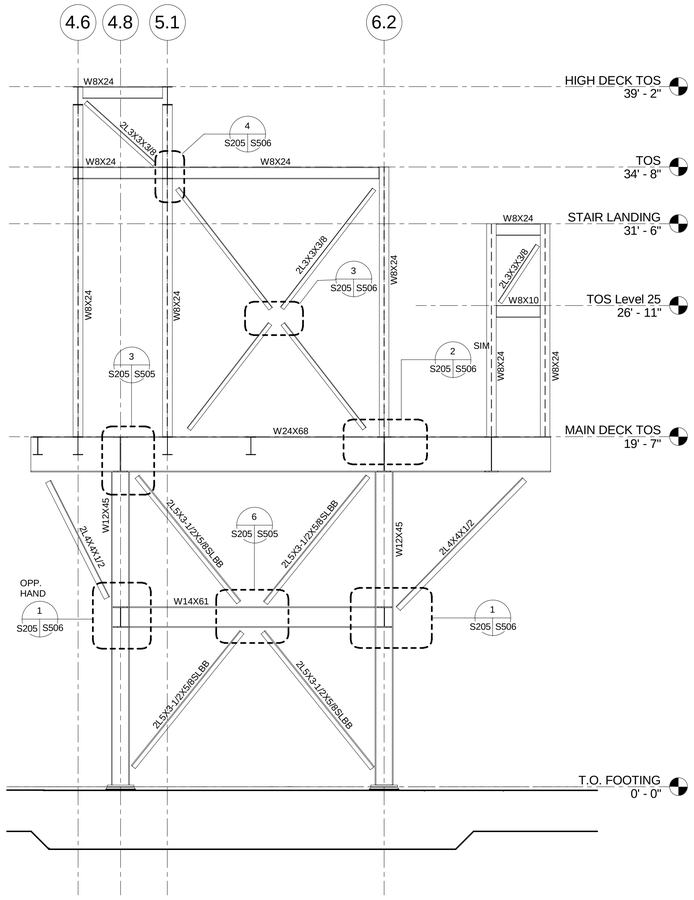

1 DEAERATOR PLATFORM ELEVATION @ LINE B.5
S107, S106 | S205 1/4" = 1'-0"

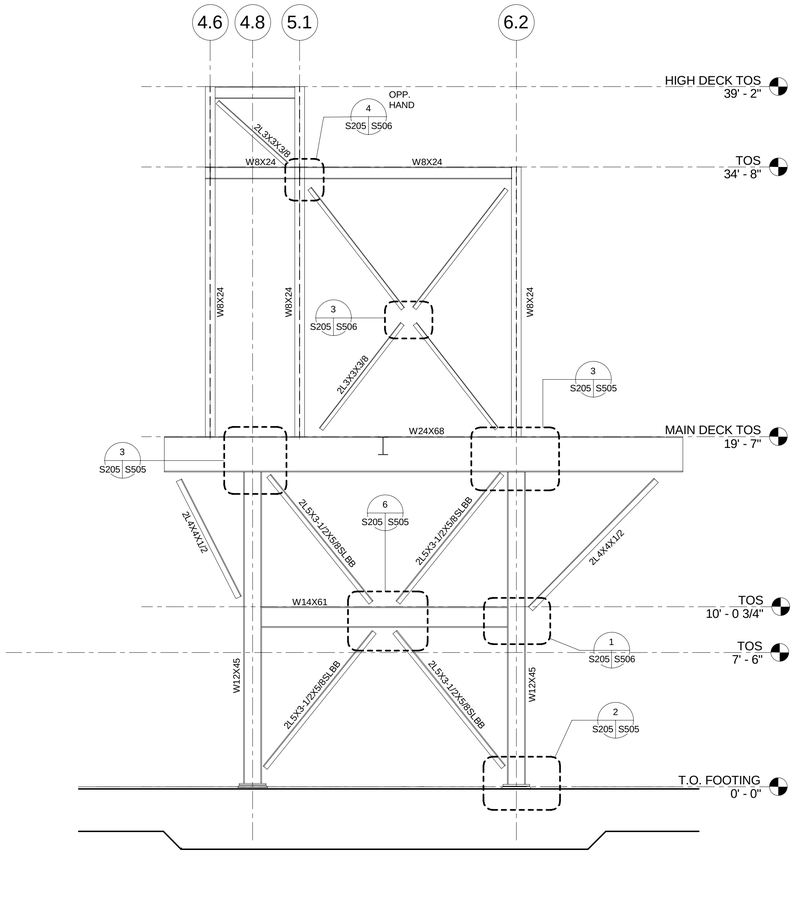

2 DEAERATOR PLATFORM ELEVATION @ LINE B.9
S107, S106 | S205 1/4" = 1'-0"

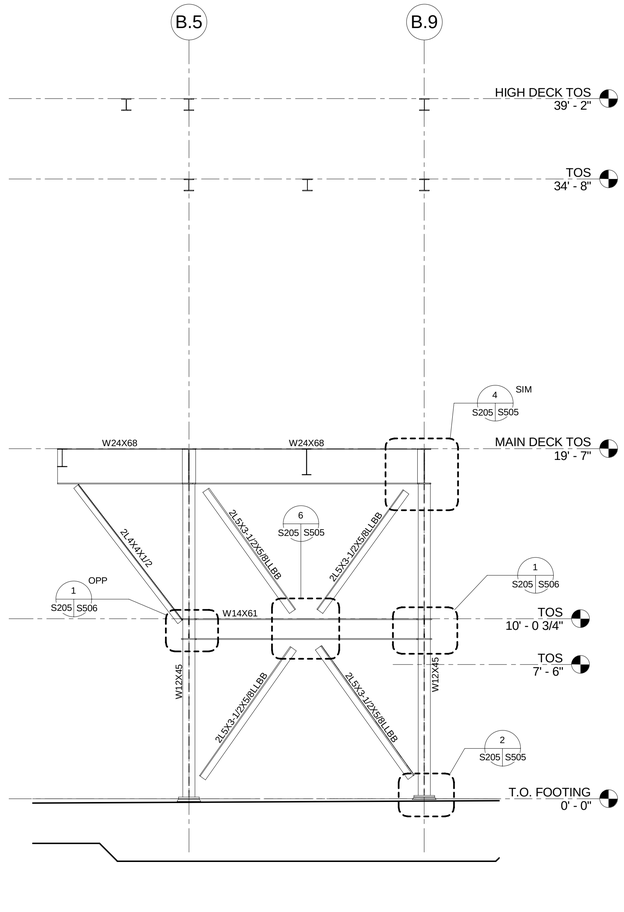

3 DEAERATOR PLATFORM ELEVATION @ LINE 4.8
S106 | S205 1/4" = 1'-0"

SCALE: 1/4" = 1'-0" 4' 2' 0' 4' 8'

REGISTERED PROFESSIONAL ENGINEER AZITA FIROUZ No. 3535 STRUCTURAL STATE OF CALIFORNIA

ZONE	LETTER	DESCRIPTION	DRAWN	DATE	Approver APPRVD

REVISIONS

DRAWN F.BONALDI	DATE	Ames Research Center Moffett Field, California
DESIGNED A.FIROUZI	DATE	
CHECKED N.SHAH	DATE	REPLACE ARC JET COMPLEX SVS BOILER STRUCTURAL
A&E PM G.HITE	DATE	
NASA PM W.LEE	DATE	DEAERATOR PLATFORM ELEVATIONS
REQUESTER G.RAICHE	DATE	
R&QA	DATE	
SAFETY/PSM	DATE	
SUPERVISOR S. FRANKEL	DATE	

SIZE	CAGE CODE		REV
D	25307	A 231-1300- S205	
SCALE: 1/4" = 1'-0"	INDEX	SHEET	OF

FILE NAME: 60212932_SVS-Boiler Plant_Stru-CENTRAL.rvt 12/12/12

C:\Users\wbonald\Documents\Revit\2011\60212932_SVS-Boiler Plant_Stru-CENTRAL_wbonaldi.rvt
1/29/2013 12:58:41 PM

AECOM: 60212932.0001

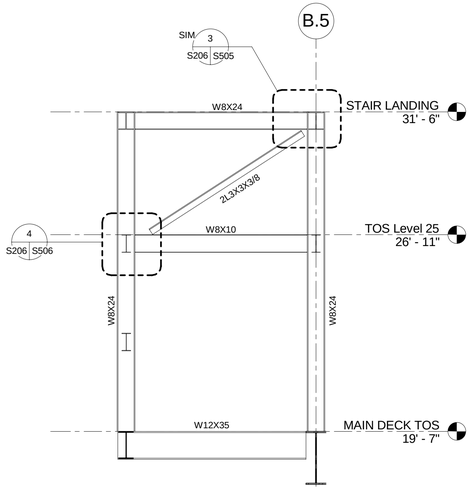

1 STAIR TOWER SECTION
S107, S106 S206 3/8" = 1'-0"

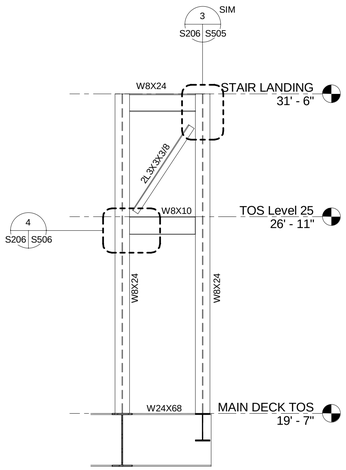

2 STAIR TOWER SECTION
S107, S106 S206 3/8" = 1'-0"

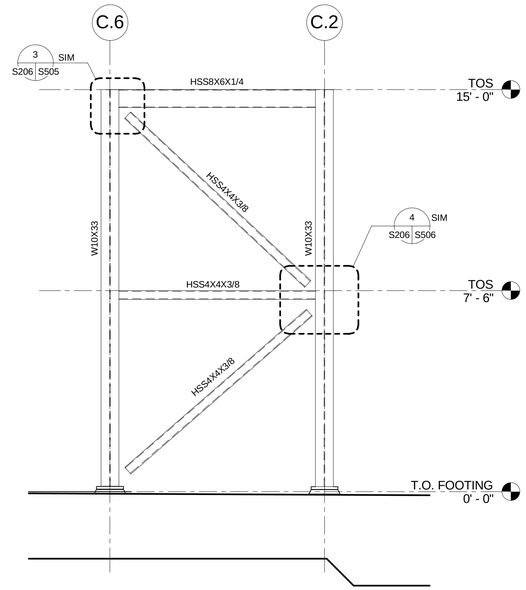

5 WALKWAY ELEVATION AT LINE 6.2
S105 S206 3/8" = 1'-0"

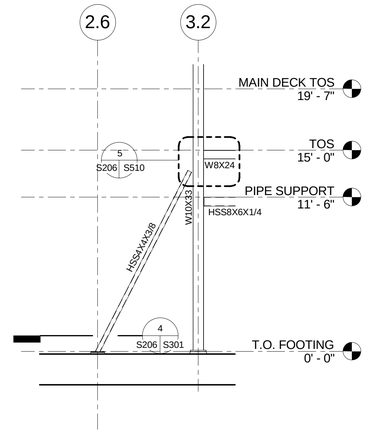

6 WALKWAY ELEVATION AT LINE B3
S102 S206 3/16" = 1'-0"

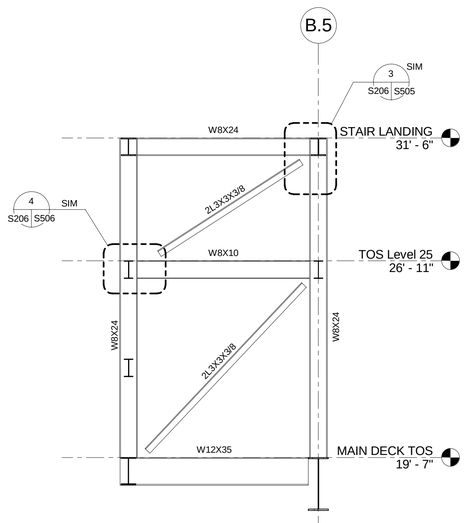

3 STAIR TOWER SECTION
S107, S106 S206 3/8" = 1'-0"

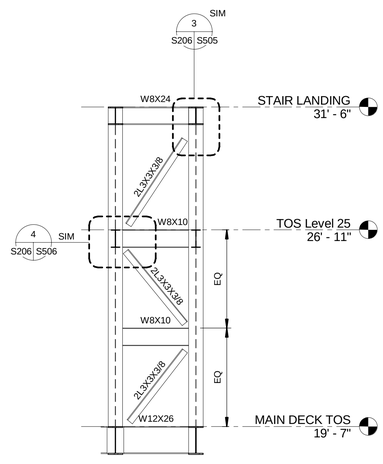

4 STAIR TOWER SECTION
S107, S106 S206 3/8" = 1'-0"

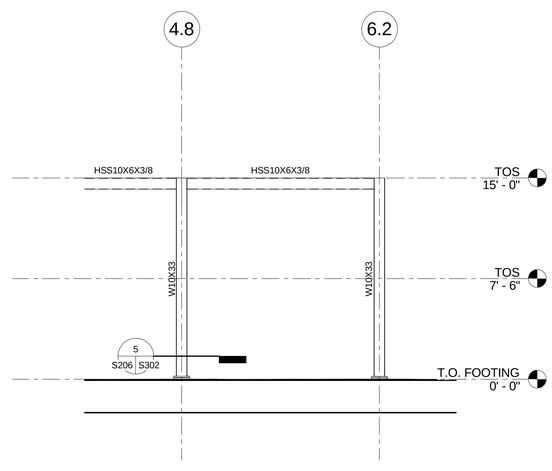

7 WALKWAY ELEVATION AT LINE C.6
S105 S206 3/16" = 1'-0"

SCALE: 3/8" = 1'-0" 1' 0' 2' 5' 10'

SCALE: 3/16" = 1'-0" 2' 0' 4' 10' 20'

REGISTERED PROFESSIONAL ENGINEER AZITA FIROUZ No. 3535 STRUCTURAL STATE OF CALIFORNIA

ZONE	LETTER	DESCRIPTION	DRAWN	DATE	Approver APPRVD

REVISIONS

DRAWN F.BONALDI	DATE	Ames Research Center Moffett Field, California
DESIGNED A.FIROUZI	DATE	
CHECKED N.SHAH	DATE	REPLACE ARC JET COMPLEX SVS BOILER STRUCTURAL
A&E PM G.HITE	DATE	
NASA PM W.LEE	DATE	ELEVATIONS/SECTIONS
REQUESTER G.RAICHE	DATE	
R&QA	DATE	
SAFETY/PSM	DATE	SIZE D · CAGE CODE 25307 · A 231-1300- S206 · REV
SUPERVISOR S. FRANKEL	DATE	SCALE: As indicated · INDEX · SHEET · OF

FILE NAME: 60212932_SVS-Boiler Plant_Stru-CENTRAL.rvt 12/12/12

C:\Users\wbonald\Documents\Revit2011\60212932_SVS-Boiler Plant_Stru-CENTRAL_wbonaldi.rvt
1/28/2013 12:58:42 PM

AECOM: 60212932.0001

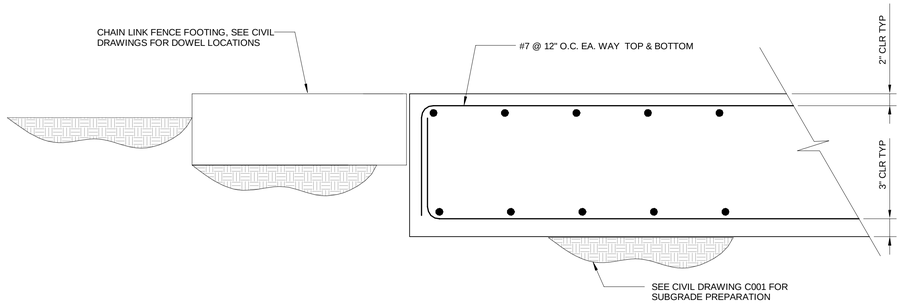

A S102 S301 FOUNDATION DETAIL 1" = 1'-0"

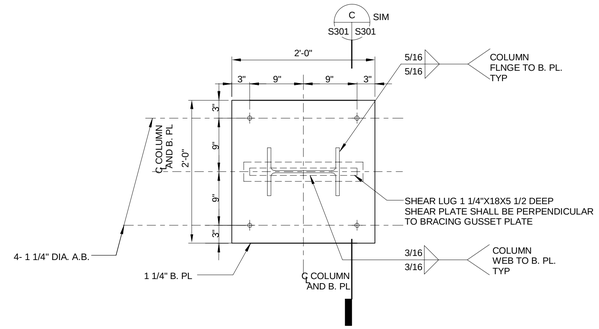

NOTE: PROVIDE GROUT HOLE IN BASE PLATE FOR GROUTING.

2 S301 S301 BASE PLATE AT COLUMNS A-2, A-8, B-8, D-2, B.9-1 1" = 1'-0"

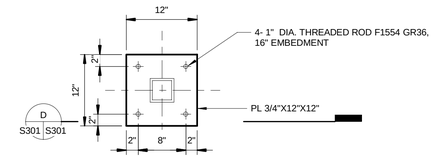

4 S206 S301 BASE PLATE AT LINE B.3-2.6 1" = 1'-0"

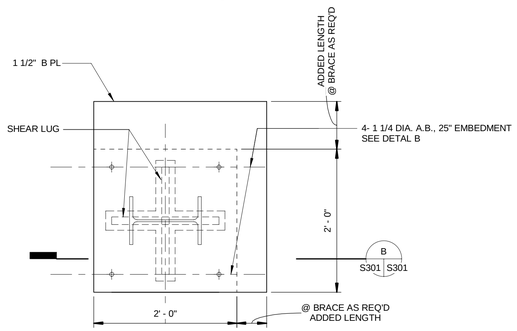

NOTE: FOR INFO NOT SHOWN, SEE DETAIL 2 ON THIS SHEET.

1 S301 S301 CANOPY BRACE FRAME BASE PLATE AT COLUMN D-1 1" = 1'-0"

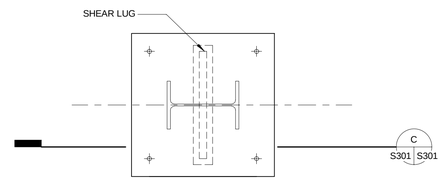

NOTE: FOR INFORMATION NOT SHOWN, SEE DETAIL 2 ON THIS SHEET

3 S301 S301 BASE PLATE AT COLUMN A-1 1" = 1'-0"

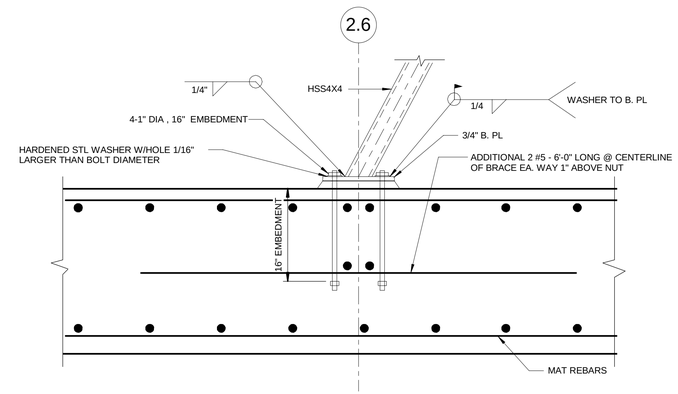

D S301 S301 WALKWAY BRACING ELEVATION AT LINE B3 1" = 1'-0"

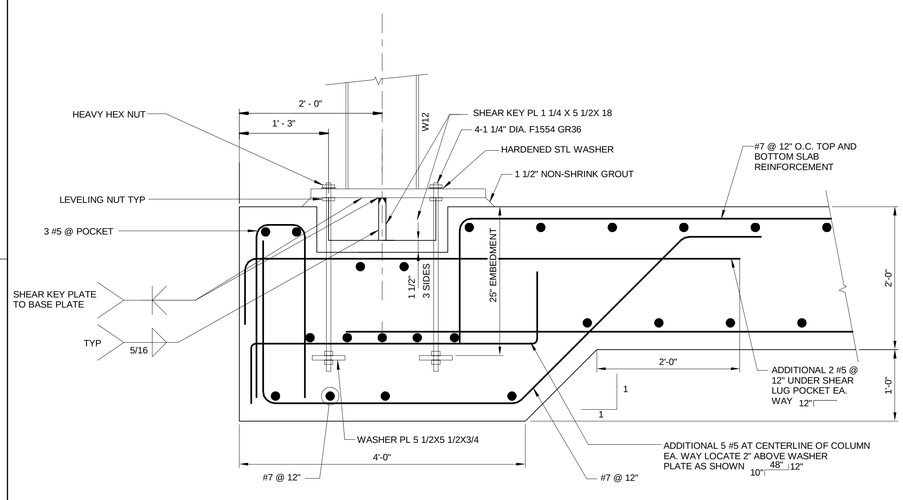

B S301, S102 S301 FOUNDATION AND BASE PLATE DETAIL AT CORNER COLUMN D1 1" = 1'-0"

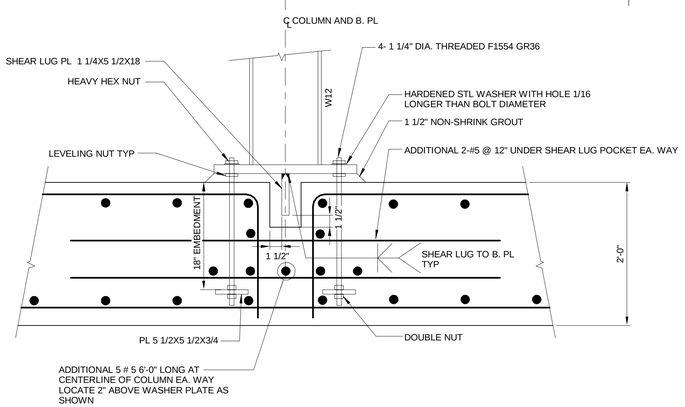

NOTE:
1. RETIGHTEN TOP NUT SUNG TIGHT AFTER GROUTING BASE PLATE.
2. FOR MAT FOUNDATION REBAR SEE DETAIL A.

C S301 S301 FOUNDATION AND BASE PLATE DETAIL 1" = 1'-0"

ZONE	LETTER	DESCRIPTION	DRAWN	DATE	Approver APPRVD

REVISIONS

DRAWN F.BONALDI	DATE	Ames Research Center Moffett Field, California
DESIGNED A.FIROUZI	DATE	
CHECKED N.SHAH	DATE	REPLACE ARC JET COMPLEX SVS BOILER STRUCTURAL
A&E PM G.HITE	DATE	
NASA PM W.LEE	DATE	FOUNDATION AND BASE PLATE DETAILS
REQUESTER G.RAICHE	DATE	
R&QA	DATE	SIZE D · CAGE CODE 25307 · A 231-1300- S301 · REV
SAFETY/PSM	DATE	SCALE: 1" = 1'-0" · INDEX · SHEET · OF
SUPERVISOR S. FRANKEL	DATE	

REGISTERED PROFESSIONAL ENGINEER ALITA FIROUZI No. 3535 STRUCTURAL STATE OF CALIFORNIA

FILE NAME: 60212932_SVS-Boiler Plant_Stru-CENTRAL.rvt 12/12/12

C:\Users\wbonald\Documents\Revit2011\60212932_SVS-Boiler Plant_Stru-CENTRAL_wbonald.rvt
1/28/2013 12:58:43 PM

AECOM: 60212932.0001

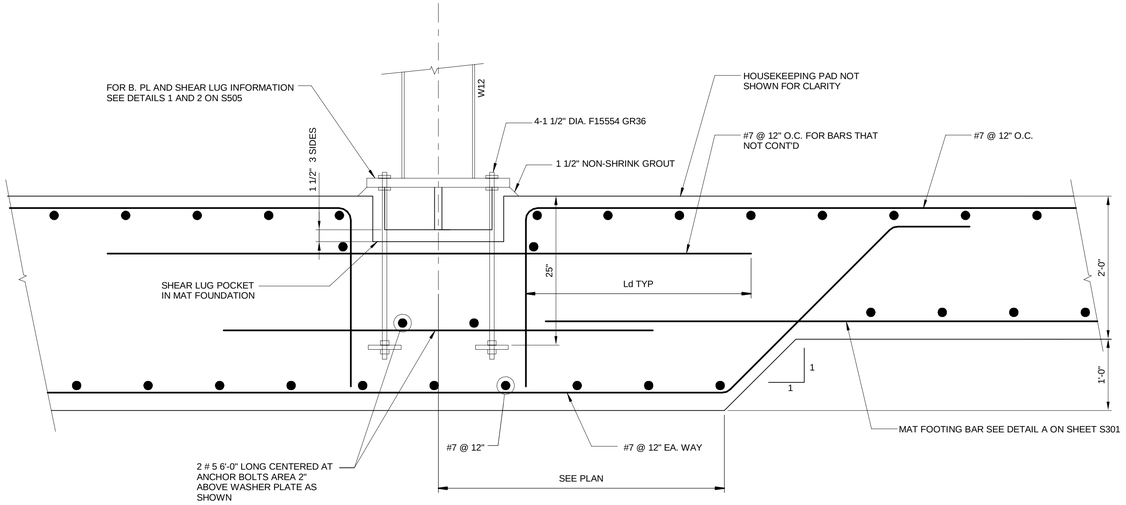

1 S102 S302 DEAERATOR PLATFORM FOUNDATION DETAIL
1" = 1'-0"

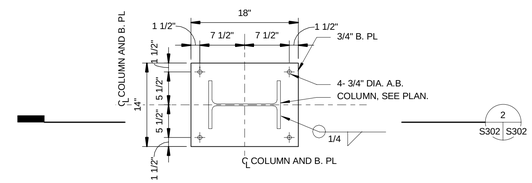

3 S302 S302 NON-BRACED FRAME BASE PLATE DETAIL @ W12 COLUMNS
1" = 1'-0"

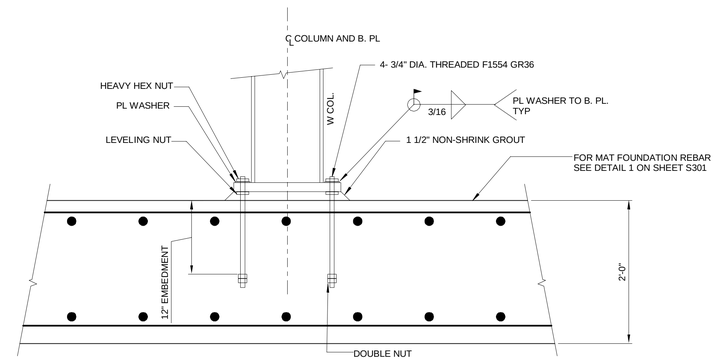

NOTE: RETIGHTEN TOP NUT SUNG TIGHT AFTER GROUTING BASE PLATE

2 S302 S302 NON-BRACED FRAME BASE PLATE SECTION
1" = 1'-0"

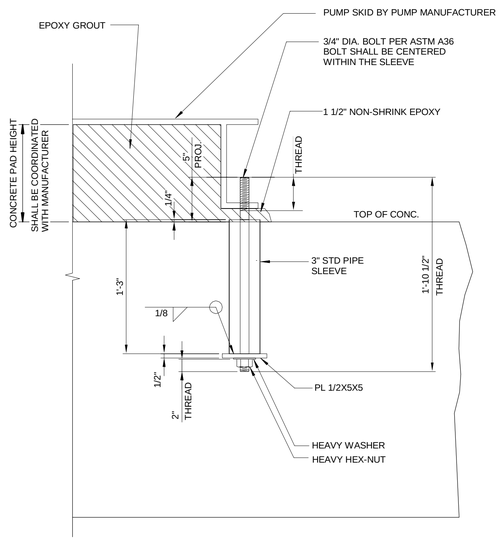

4 S102 S302 ANCHOR BOLT DETAIL AT PUMP
1 1/2" = 1'-0"

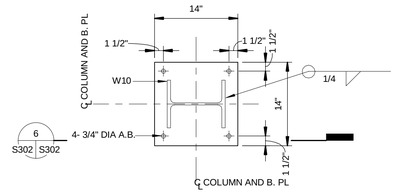

5 S206 S302 BASE PLATE AT W10 COLUMNS
1" = 1'-0"

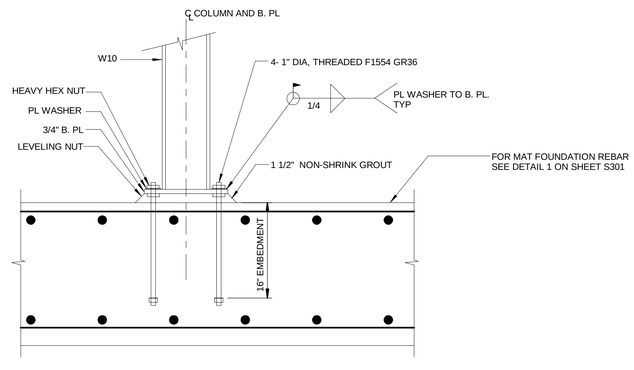

6 S302 S302 BASE PLATE AT W10 COLUMNS
1" = 1'-0"

ZONE	LETTER	DESCRIPTION	DRAWN	DATE	Approver APPRVD

REVISIONS

DRAWN F.BONALDI	DATE	Ames Research Center Moffett Field, California
DESIGNED A.FIROUZI	DATE	
CHECKED N.SHAH	DATE	REPLACE ARC JET COMPLEX SVS BOILER STRUCTURAL
A&E PM G.HITE	DATE	
NASA PM W.LEE	DATE	FOUNDATION AND BASE PLATE DETAILS
REQUESTER G.RAICHE	DATE	
R&QA	DATE	
SAFETY/IPSM	DATE	
SUPERVISOR S. FRANKEL	DATE	

REGISTERED PROFESSIONAL ENGINEER ALITA FIROUZI No. 3535 STRUCTURAL STATE OF CALIFORNIA

SIZE	CAGE CODE		REV
D	25307	A 231-1300- S302	
SCALE: As indicated		INDEX	SHEET OF

FILE NAME: 60212932_SVS-Boiler Plant_Stru-CENTRAL.rvt 12/12/12

C:\Users\wbonaldi\Documents\Revit2011\60212932_SVS-Boiler Plant_Stru-CENTRAL_wbonaldi.rvt
1/28/2013 12:58:44 PM

AECOM: 60212932.0001

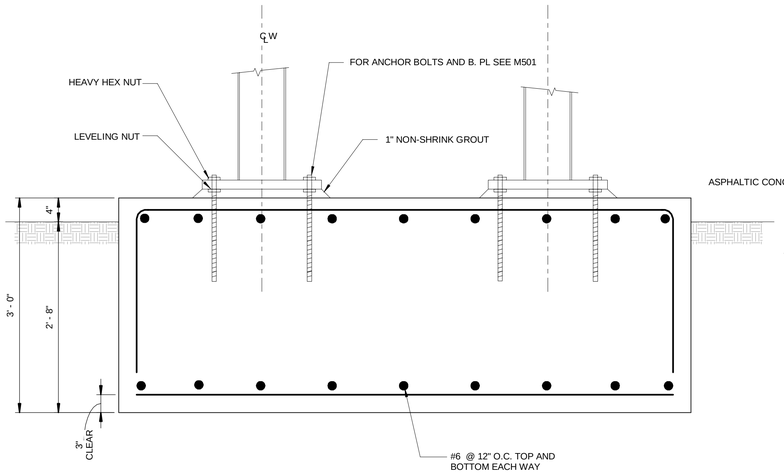

1 S109 S303 PIPE SUPPORT FOOTING 1" = 1'-0"

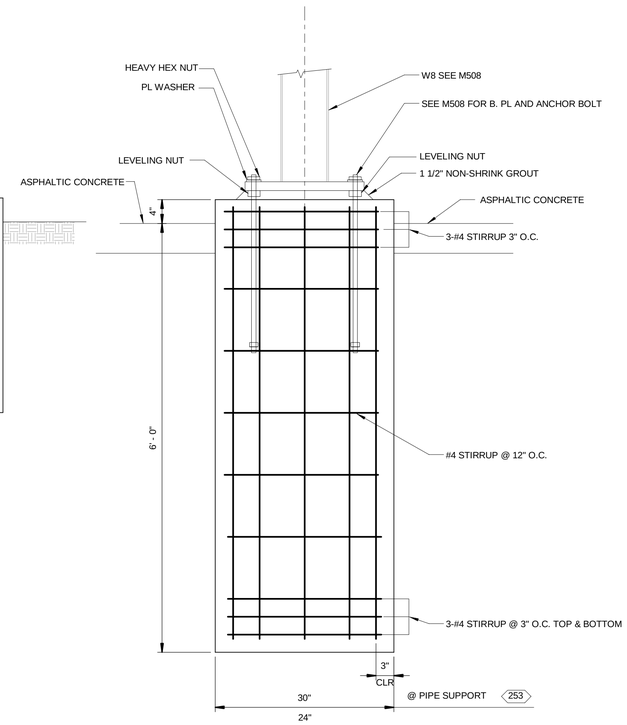

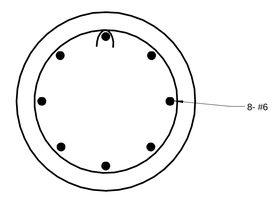

2 S109 S303 PIPE SUPPORT FOOTING 1" = 1'-0"

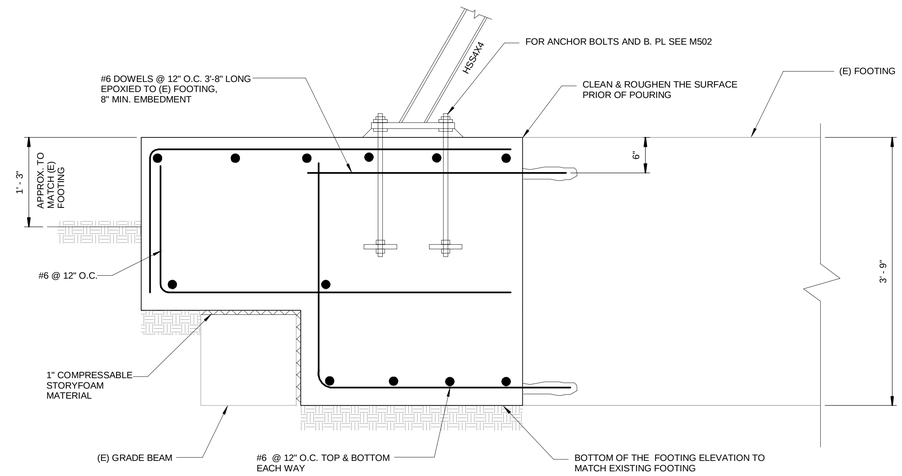

4 S109 S303 PIPE SUPPORT FOOTING 1" = 1'-0"

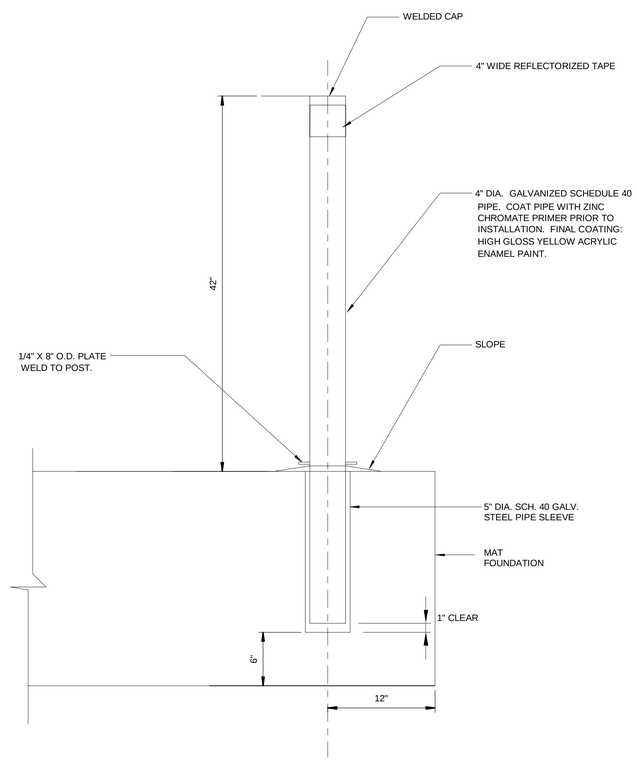

NOTE: FOR FOUNATION REBARS SEE DETAL A ON SHEET S301

3 S102 S303 REMOVABLE BOLLARD 1 1/2" = 1'-0"

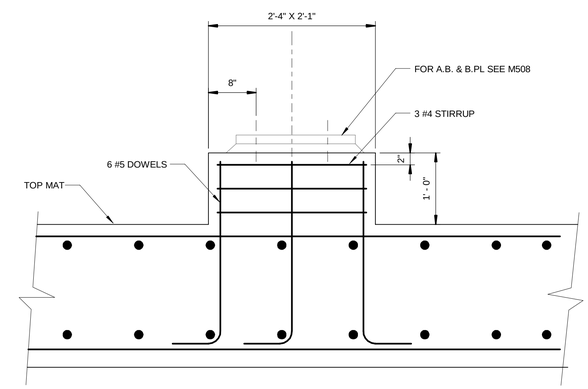

5 S102 S303 PIPE SUPPORT FOOTING 1" = 1'-0"

ZONE	LETTER	DESCRIPTION	DRAWN	DATE	Approver APPRVD

REVISIONS

DRAWN F.BONALDI	DATE	Ames Research Center Moffett Field, California
DESIGNED A.FIROUZI	DATE	
CHECKED N.SHAH	DATE	REPLACE ARC JET COMPLEX SVS BOILER STRUCTURAL
A&E PM G.HITE	DATE	
NASA PM W.LEE	DATE	FOUNDATION DETAILS
REQUESTER G.RAICHE	DATE	
R&QA	DATE	
SAFETY/PSM	DATE	
SUPERVISOR S. FRANKEL	DATE	

REGISTERED PROFESSIONAL ENGINEER A-TA FIROUZI No. 3535 STRUCTURAL STATE OF CALIFORNIA

SIZE	CAGE CODE		REV
D	25307	A 231-1300- S303	
SCALE: As indicated		INDEX	SHEET OF

FILE NAME: 60212932_SVS-Boiler Plant_Stru-CENTRAL.rvt 12/12/12

C:\Users\wbonaldi\Documents\Revit\2011\60212932_SVS-Boiler Plant_Stru-CENTRAL_wbonaldi.rvt
1/28/2013 12:58:45 PM

AECOM: 60212932.0001

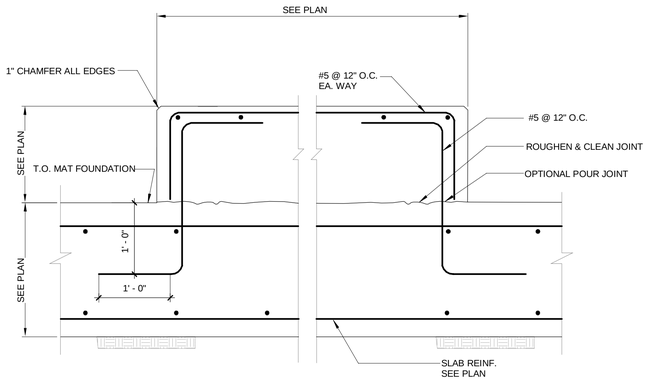

1 S501 S501 EQUIPMENT HOUSEKEEPING CONCRETE PAD
1" = 1'-0"

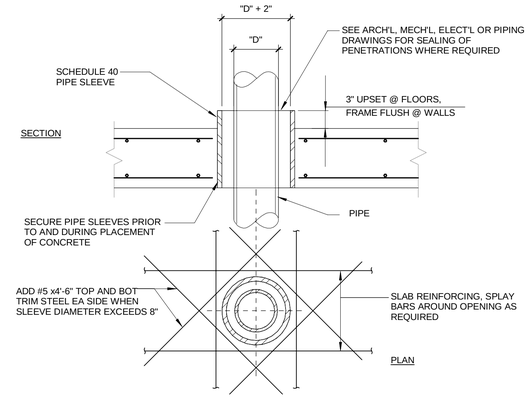

NOTE: THIS DETAIL IS APPLICABLE TO INDIVIDUAL SLEEVES ONLY. WHEN SLEEVES ARE LESS THAN 3 DIAMETERS APART, OR 2 OR MORE SLEEVES ARE GROUPED, REINFORCE AS A TYPICAL SLAB OPENING. IF THE TYPICAL SLAB OPENING DETAILS LIMITS ARE EXCEEDED, CONSULT COR.

2 S501 S501 TYPICAL SLAB AND WALL PIPE SLEEVE
1" = 1'-0"

NOTE: f'c = 3,000 PSI, 4,000 PSI AND 5,000 PSI
fy = 60,000 PSI

BASIC

	LENGTH / BAR SIZE	#3	#4	#5	#6	#7	#8	#9	#10	#11
3,000 PSI	"B"	1'-10"	2'-5"	3'-0"	3'-7"	5'-3"	6'-0"	6'-9"	7'-7"	8'-5"
	"Ld"	1'-5"	1'-10"	2'-4"	2'-9"	4'-0"	4'-7"	5'-2"	5'-10"	6'-6"
4,000 PSI	"B"	1'-7"	2'-1"	2'-7"	3'-1"	4'-6"	5'-2"	5'-10"	6'-7"	7'-3"
	"Ld"	1'-3"	1'-7"	2'-0"	2'-5"	3'-6"	4'-0"	4'-6"	5'-1"	5'-7"

TOP BARS

	LENGTH / BAR SIZE	#3	#4	#5	#6	#7	#8	#9	#10	#11
3,000 PSI	"B"	2'-4"	3'-2"	3'-11"	4'-8"	6'-9"	7'-9"	8'-9"	9'-10"	10'-11"
	"Ld"	1'-10"	2'-5"	3'-0"	3'-7"	5'-3"	6'-0"	6'-9"	7'-7"	8'-5"
4,000 PSI	"B"	2'-1"	2'-9"	3'-5"	4'-1"	5'-11"	6'-9"	7'-7"	8'-6"	9'-5"
	"Ld"	1'-7"	2'-1"	2'-7"	3'-1"	4'-6"	5'-2"	5'-10"	6'-7"	7'-3"
5,000 PSI										

NOTE:
1. TOP BARS ARE HORIZONTAL REINFORCING BARS (EXCEPT WALL HORIZ BARS) SO PLACED THAT MORE THAN 12" OF FRESH CONCRETE IS CAST IN THE MEMBER BELOW THE BAR.
2. LAP LENGTH SHALL BE THAT OF THE LARGER DIAMETER BAR IN THE SPLICE.
3. SPACING OF THE BARS SHALL BE A MINIMUM OF 2*db

3 S501 S501 LAP SPLICE/DEVELOPMENT LENGTH
3/4" = 1'-0"

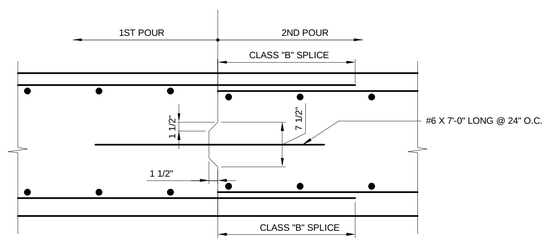

NOTE:
1. CONTRACTOR TO SUBMIT DRAWING WITH LOCATION OF CONSTRUCTION JOINT FOR APPROVAL.
2. CONSTRUCTION JOINT SHALL NOT BE LOCATED AT BAR SPLICE LOCATION.
3. CONSTRUCTION JOINT SHALL BE LOCATED IN MID THIRD OF COLUMN BAY.

4 S501 S501 TYPICAL CONSTRUCTION JOINT DETAIL
1" = 1'-0"

ZONE	LETTER	DESCRIPTION	DRAWN	DATE	Approver APPRVD

REVISIONS

DRAWN F.BONALDI	DATE	Ames Research Center Moffett Field, California
DESIGNED A.FIROUZI	DATE	
CHECKED N.SHAH	DATE	REPLACE ARC JET COMPLEX SVS BOILER STRUCTURAL
A&E PM G.HITE	DATE	
NASA PM W.LEE	DATE	TYPICAL CONCRETE DETAILS
REQUESTER G.RAICHE	DATE	
R&QA	DATE	
SAFETY/PSM	DATE	SIZE D · CAGE CODE 25307 · A 231-1300- S501 · REV
SUPERVISOR S. FRANKEL	DATE	SCALE: As indicated · INDEX · SHEET · OF

REGISTERED PROFESSIONAL ENGINEER ALITA FIROUZI No. 3535 STRUCTURAL STATE OF CALIFORNIA

FILE NAME: 60212932_SVS-Boiler Plant_Stru-CENTRAL.rvt 12/12/12

C:\Users\wbonaldi\Documents\Revit2011\60212932_SVS-Boiler Plant_Stru-CENTRAL_wbonaldi.rvt
1/28/2013 12:58:46 PM

AECOM: 60212932.0001

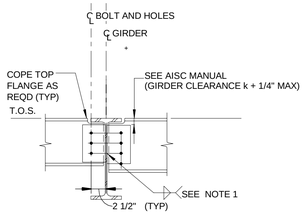

NOTES
1. FOR NUMBER AND SIZE OF BOLTS, SHEAR PLATE THICKNESS AND WELD SIZE; SEE BEAM CONNECTION SCHEDULE ON THIS DRAWING.

TYPICAL INTERIOR BEAMS TO GIRDER SHEAR CONNECTION

1 S502 | S502 1" = 1'-0"

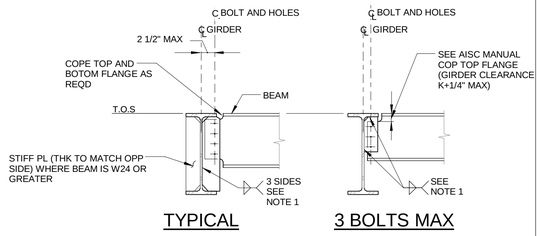

NOTES
1. FOR NUMBER AND SIZE OF BOLTS, SHEAR PLATE THICKNESS AND WELD SIZE; SEE BEAM CONNECTION SCHEDULE ON THIS DRAWING.

TYPICAL ONE SIDE BEAM TO GIRDER SHEAR CONNECTION

2 S502 | S502 1" = 1'-0"

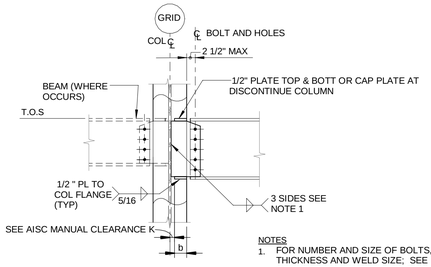

NOTES
1. FOR NUMBER AND SIZE OF BOLTS, SHEAR PLATE THICKNESS AND WELD SIZE; SEE BEAM CONNECTION SCHEDULE ON THIS DRAWING.
2. OMIT CLEARANCE k IF b<4"

TYPICAL BEAM AND GIRDER TO COLUMN WEB SHEAR CONNECTIONS

3 S502 | S502 1" = 1'-0"

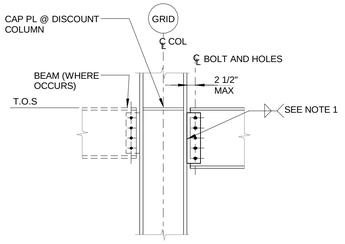

NOTES
1. FOR NUMBER AND SIZE OF BOLTS, SHEAR PLATE THICKNESS AND WELD SIZE; SEE BEAM CONNECTION SCHEDULE ON THIS DRAWING.

TYPICAL BEAM AND GIRDER TO COLUMN FLANGE SHEAR CONNECTION

4 S502 | S502 1" = 1'-0"

BEAM CONNECTION SCHEDULE				
BEAM SIZE	36ksi STEEL PLATE THICKNESS	A325 N BOLTS	WELD SIZE "S"	REMARK
C8, W8, W10	1/4" U.N.O.	2-3/4" DIA	1/4"	
C12, W12, W14	5/16"	3-3/4" DIA	1/4"	
W16, W18	5/16"	4-3/4" DIA	1/4"	
W21	5/16"	5-3/4" DIA	1/4"	
W24	1/2"	6-3/4" DIA	5/16"	
W27	1/2"	7-3/4" DIA	5/16"	
W30	1/2"	8-3/4" DIA	5/16"	

NOTE: 1. BOLTS SPACED @ 3" O.C. TYP UNO. USE 3/4" DIA A325 N BOLTS TYP UNO.

BEAM CONNECTION SCHEDULE

5 S502 | S502 1 : 1

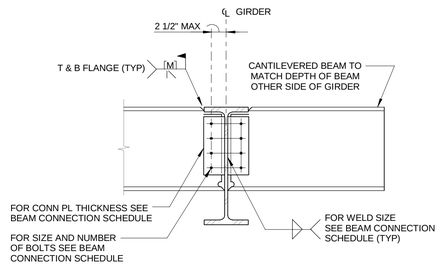

MOMENT CONNECTION AT CANTILEVERED BEAM

6 S502 | S502 1" = 1'-0"

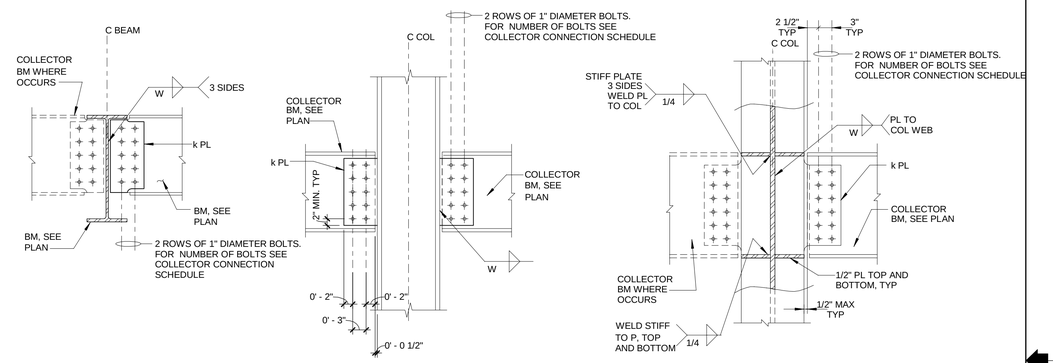

DOUBLE ROW BOLTED COLLECTOR CONNECTION SCHEDULE			
BEAM SIZE	NO. OF A325-SC BOLTS	CONN. k THK.	WELD SIZE "W"
W8	(4) 1" DIA.	3/8"	3/8"
W12, W14	(6) 1" DIA.	3/8"	3/8"
W16	(8) 1" DIA.	1/2"	3/8"
W18	(8) 1" DIA.	1/2"	5/16"
W21	(10) 1 " DIA.	5/8"	3/8"
W24	(12) 1" DIA.	5/8"	3/8"
W33	(18) 1 " DIA.	3/4"	3/8"

NOTES
1. ALL COLLECTOR CONNECTION INDICATED ON THE PLAN:
2. BOLTS SPACED @ 3" O.C. TYP UNO.

COLLECTOR CONNECTION AND SCHEDULE

7 S502 | S502 1 : 1

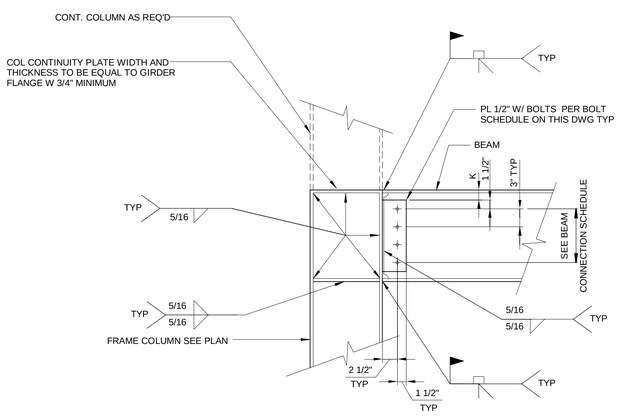

TYPICAL GIRDER TO COLUMN MOMENT CONNECTION

8 S502 | S502 1" = 1'-0"

ZONE	LETTER	DESCRIPTION	DRAWN	DATE	Approver APPRVD

REVISIONS

DRAWN F.BONALDI | DATE
DESIGNED A.FIROUZI | DATE
CHECKED N.SHAH | DATE
A&E PM G.HITE | DATE
NASA PM W.LEE | DATE
REQUESTER G.RAICHE | DATE
R&QA | DATE
SAFETY/PSM | DATE
SUPERVISOR S. FRANKEL | DATE

REGISTERED PROFESSIONAL ENGINEER AZITA FIROUZI No. 3535 STRUCTURAL STATE OF CALIFORNIA

Ames Research Center
Moffett Field, California

REPLACE ARC JET COMPLEX SVS BOILER
STRUCTURAL

TYPICAL STEEL DETAILS

SIZE D | CAGE CODE 25307 | A 231-1300- S502 | REV
SCALE: As indicated | INDEX | SHEET | OF

FILE NAME: 60212932_SVS-Boiler Plant_Stru-CENTRAL.rvt 12/12/12

C:\Users\wbonald\Documents\Revit\2011\60212932_SVS-Boiler Plant_Stru-CENTRAL_wbonaldi.rvt
1/28/2013 12:58:47 PM

AECOM: 60212932.0001

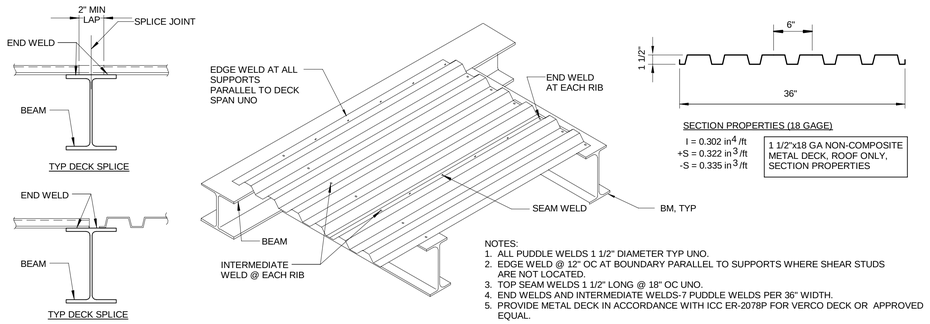

NOTES:
1. ALL PUDDLE WELDS 1 1/2" DIAMETER TYP UNO.
2. EDGE WELD @ 12" OC AT BOUNDARY PARALLEL TO SUPPORTS WHERE SHEAR STUDS ARE NOT LOCATED.
3. TOP SEAM WELDS 1 1/2" LONG @ 18" OC UNO.
4. END WELDS AND INTERMEDIATE WELDS-7 PUDDLE WELDS PER 36" WIDTH.
5. PROVIDE METAL DECK IN ACCORDANCE WITH ICC ER-2078P FOR VERCO DECK OR APPROVED EQUAL.

1 S503 S503 TYPICAL METAL DECK CONNECTION 3/4" = 1'-0"

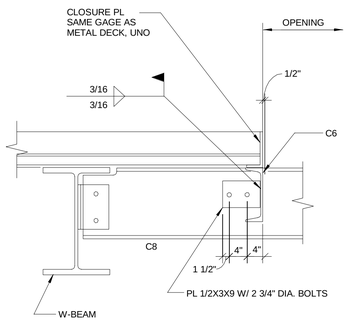

SECTION A-A

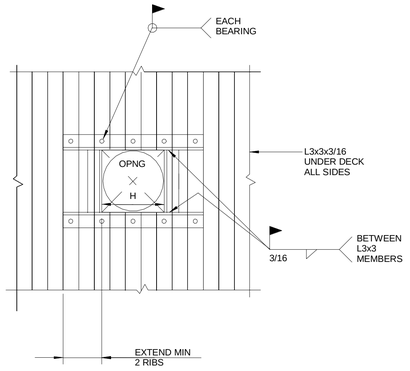

MAXIMUM 12"x12" OR 12" ROUND OPENING

NOTES:

1. FOR LOCATIONS AND SIZE OF OPENINGS, SEE ARCHITECTURAL AND MECHANICAL DWGS.

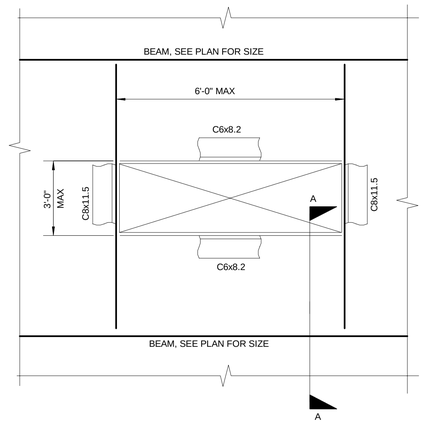

OPENING GREATER THAN 12"x12"

2 S503 S503 TYPICAL ROOF OPENING DETAILS 3/4" = 1'-0"

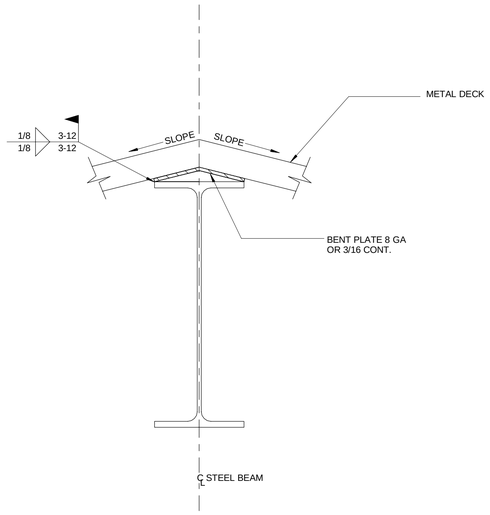

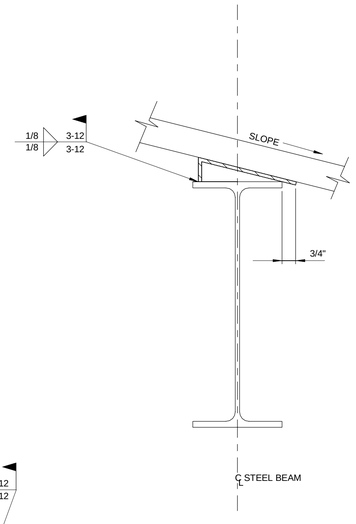

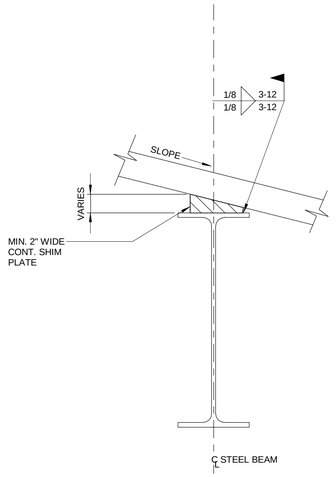

NOTE:
1. PROVIDE CONTINUOUS BENT PLATE OR SHIM AS REQUIRED AT SLOPING DECK BY METAL DECK CONTRACTOR , TYP.
2. FOR CLARITY, METAL DECK WELDING NOT SHOWN.

3 S503 S503 TYPICAL DECK BEARING DETAIL 3" = 1'-0"

ZONE	LETTER	DESCRIPTION	DRAWN	DATE	Approver APPRVD

REVISIONS

DRAWN F.BONALDI DATE
DESIGNED A.FIROUZI DATE
CHECKED N.SHAH DATE
A&E PM G.HITE DATE
NASA PM W.LEE DATE
REQUESTER G.RAICHE DATE
R&QA DATE
SAFETY/PSM DATE
SUPERVISOR S. FRANKEL DATE

Ames Research Center
Moffett Field, California

REPLACE ARC JET COMPLEX SVS BOILER
STRUCTURAL

TYPICAL DECK DETAILS

SIZE D | CAGE CODE 25307 | A 231-1300- S503 | REV
SCALE: As indicated | INDEX | SHEET | OF

REGISTERED PROFESSIONAL ENGINEER ALITA FIROUZI No. 3535 STRUCTURAL STATE OF CALIFORNIA

FILE NAME: 60212932_SVS-Boiler Plant_Stru-CENTRAL.rvt 12/12/12

C:\Users\wbonaldi\Documents\Revit\2011\60212932_SVS-Boiler Plant_Stru-CENTRAL_wbonaldi.rvt
1/28/2013 12:58:47 PM

AECOM: 60212932.0001

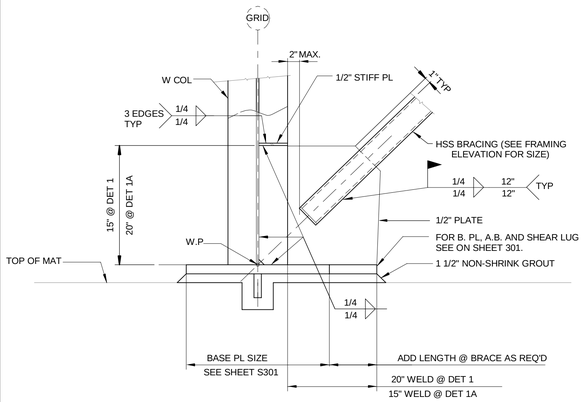

NOTES:
1. WELD LENGTH OF HSS TO GUSSET PLATE SHALL BE MAINTAINED . GUSSET PLATE SIZE SHALL BE INCREASED TO ACCOMODATE BRACE GEOMETRY.
2. PROVIDE 3/16" CLOSURE PL @ END OF HSS (TYP).

1A S202, S201 S504 1 S202, S201 S504 1" = 1'-0"
TYPICAL BRACE CONNECTION

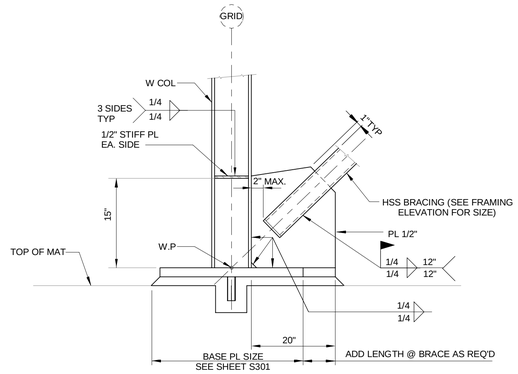

NOTE: FOR INFO NOT SHOWN SEE DETAIL DETAIL 1 ON SHEET S504.

2 S201 S504 1" = 1'-0"
TYPICAL BRACE CONNECTION

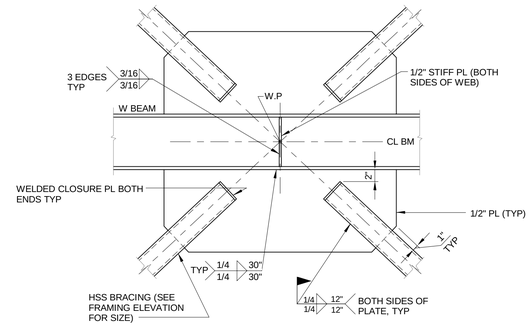

3 S202, S201 S504 1" = 1'-0"
TYPICAL BRACE CONNECTION

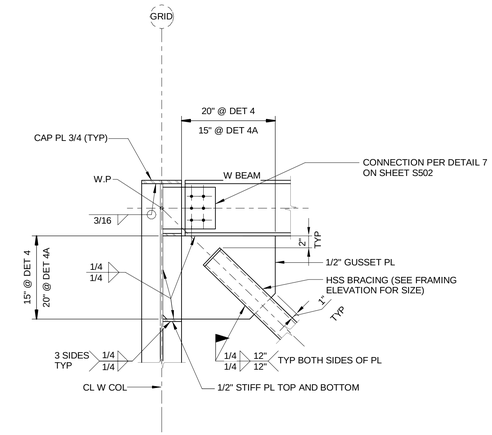

NOTE: FOR INFO NOT SHOWN SEE DETAIL 5

4A S202 S504 4 S202, S201 S504 1" = 1'-0"
TYPICAL DETAIL

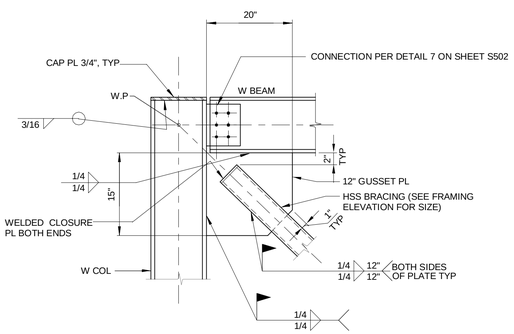

5 S201 S504 1" = 1'-0"
TYPICAL DETAIL

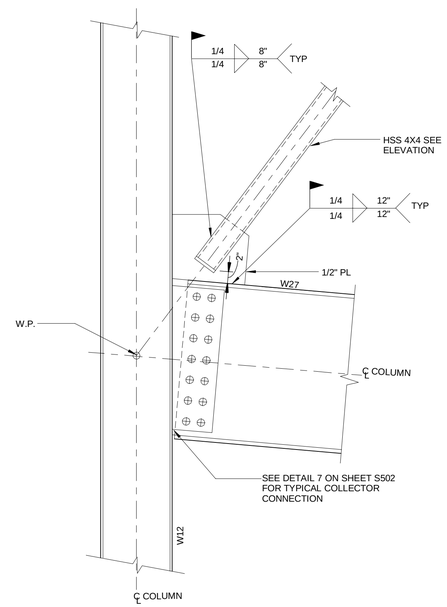

6 S203 S504 1" = 1'-0"
DETAIL

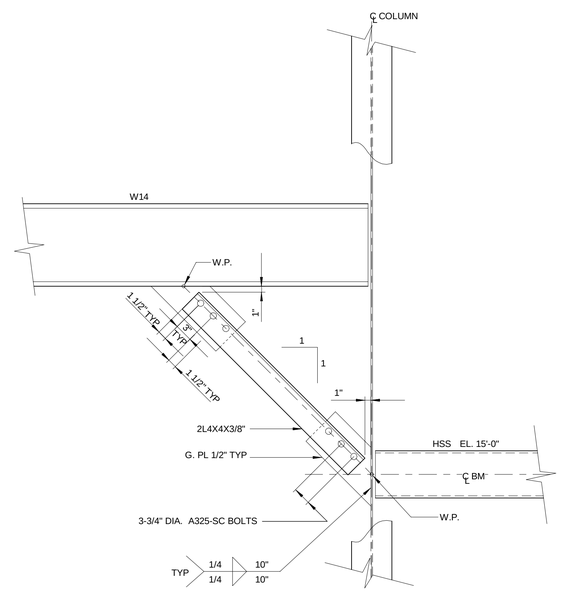

NOTE: FOR BEAM TO COLUMN CONNECTION, SEE DETAIL 7 ON S502.

7 S201 S504 1" = 1'-0"
TYPICAL DETAIL

ZONE	LETTER	DESCRIPTION	DRAWN	DATE	Approver APPRVD

REVISIONS

DRAWN F.BONALDI	DATE	Ames Research Center Moffett Field, California
DESIGNED A.FIROUZI	DATE	
CHECKED N.SHAH	DATE	REPLACE ARC JET COMPLEX SVS BOILER STRUCTURAL
A&E PM G.HITE	DATE	
NASA PM W.LEE	DATE	CANOPY BRACING DETAILS
REQUESTER G.RAICHE	DATE	
R&QA	DATE	
SAFETY/PSM	DATE	SIZE D · CAGE CODE 25307 · A 231-1300- S504 · REV
SUPERVISOR S. FRANKEL	DATE	SCALE: 1" = 1'-0" · INDEX · SHEET · OF

REGISTERED PROFESSIONAL ENGINEER ALITA FIROUZI No. 3535 STRUCTURAL STATE OF CALIFORNIA

FILE NAME: 60212932_SVS-Boiler Plant_Stru-CENTRAL.rvt 12/12/12

C:\Users\wbonaldi\Documents\Revit\2011\60212932_SVS-Boiler Plant_Stru-CENTRAL_wbonaldi.rvt
1/28/2013 12:58:48 PM

AECOM: 60212932.0001

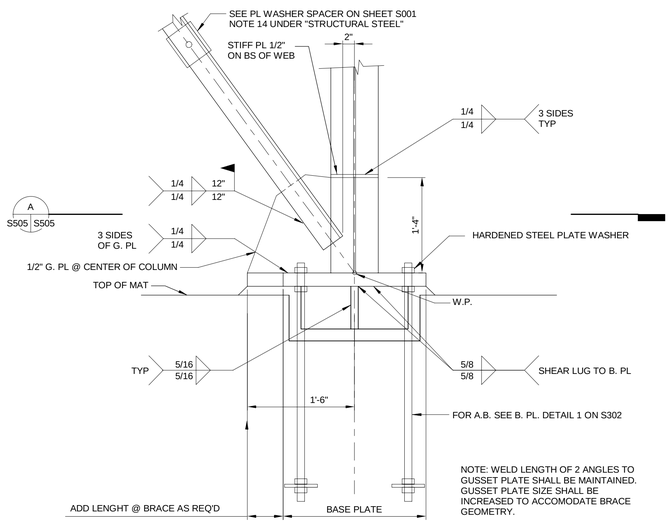

1 S204 S505 BASE PLATE DETAIL 1" = 1'-0"

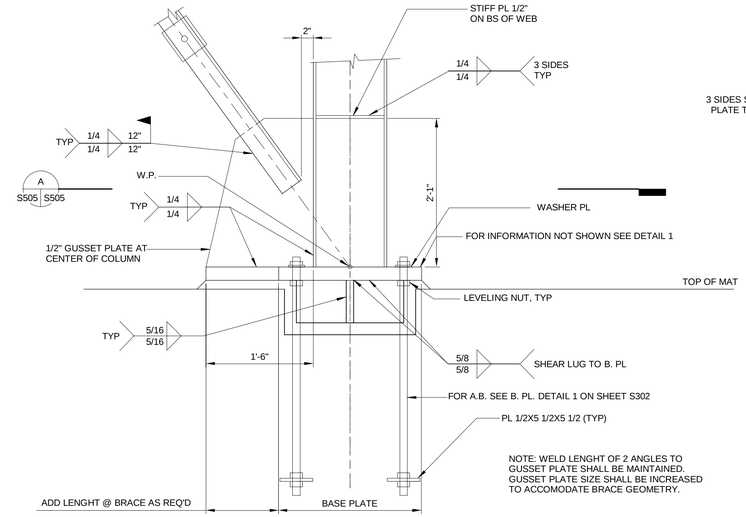

2 S205 S505 BASE PLATE DETAIL 1" = 1'-0"

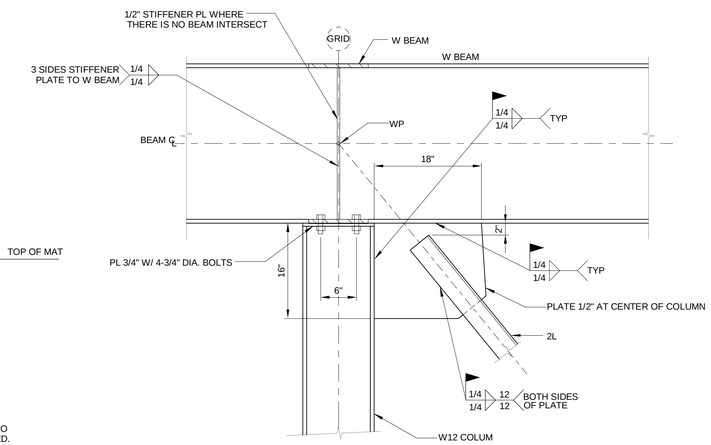

3 S205, S206 S505 DETAIL 1" = 1'-0"

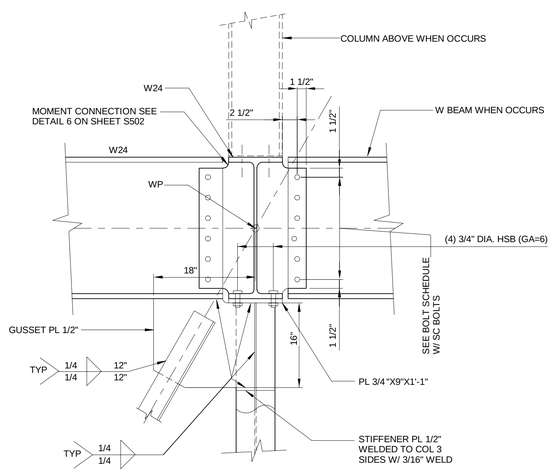

4 S205, S204 S505 TYPICAL DETAIL 1" = 1'-0"

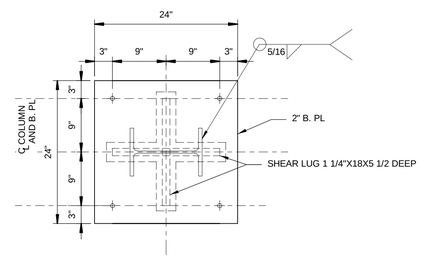

NOTE:
PROVIDE GROUT HOLE IN BASE PLATE IF REQ'D FOR GROUTING UNDER
SHEAR LUG AND BASE PLATE.

A S505 S505 BASE PLATE DETAIL 1" = 1'-0"

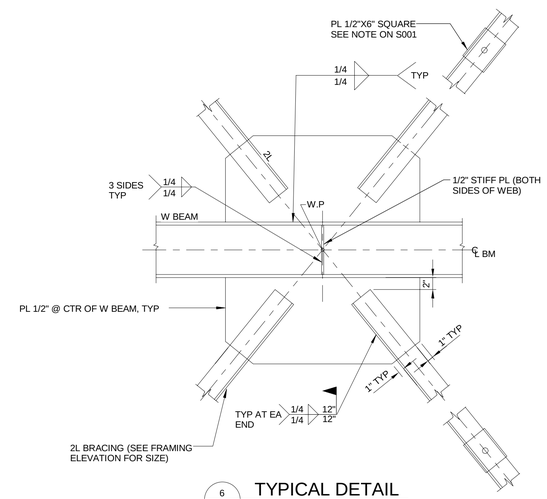

6 S205, S204 S505 TYPICAL DETAIL 1" = 1'-0"

ZONE	LETTER	DESCRIPTION	DRAWN	DATE	Approver APPRVD

REVISIONS

DRAWN F.BONALDI	DATE	Ames Research Center Moffett Field, California
DESIGNED A.FIROUZI	DATE	
CHECKED N.SHAH	DATE	REPLACE ARC JET COMPLEX SVS BOILER STRUCTURAL
A&E PM G.HITE	DATE	
NASA PM W.LEE	DATE	DEAERATOR PLATFORM DETAILS
REQUESTER G.RAICHE	DATE	
R&QA	DATE	
SAFETY/PSM	DATE	
SUPERVISOR S. FRANKEL	DATE	

REGISTERED PROFESSIONAL ENGINEER ALITA FIROUZI No. 3535 STRUCTURAL STATE OF CALIFORNIA

SIZE	CAGE CODE		REV
D	25307	A 231-1300- S505	
SCALE: 1" = 1'-0"		INDEX	SHEET OF

FILE NAME: 60212932_SVS-Boiler Plant_Stru-CENTRAL.rvt 12/12/12

AECOM: 60212932.0001

C:\Users\wbonaldi\Documents\Revit\2011\60212932_SVS-Boiler Plant_Stru-CENTRAL_wbonaldi.rvt
1/28/2013 12:56:49 PM

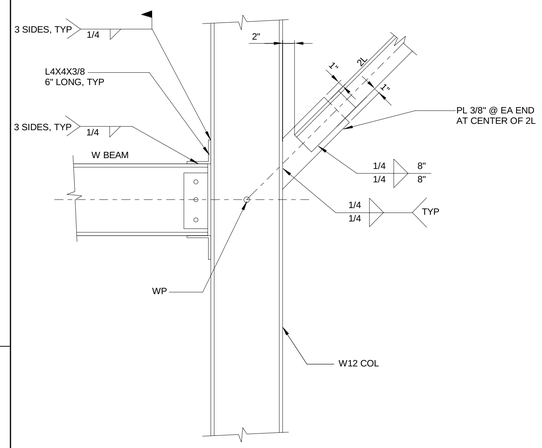

1 DETAIL
S205, S204 | S506 1" = 1'-0"

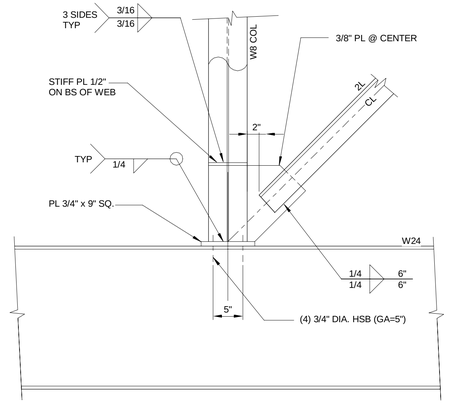

2 DETAIL
S205 | S506 1" = 1'-0"

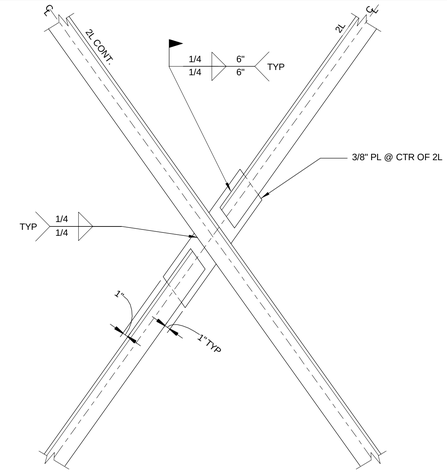

3 DETAIL
S205 | S506 1" = 1'-0"

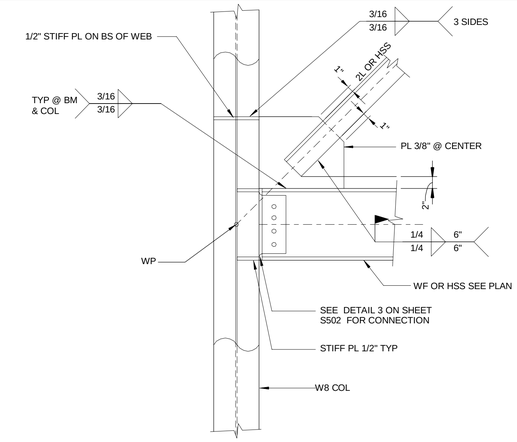

4 DETAIL
S205, S206 | S506 1" = 1'-0"

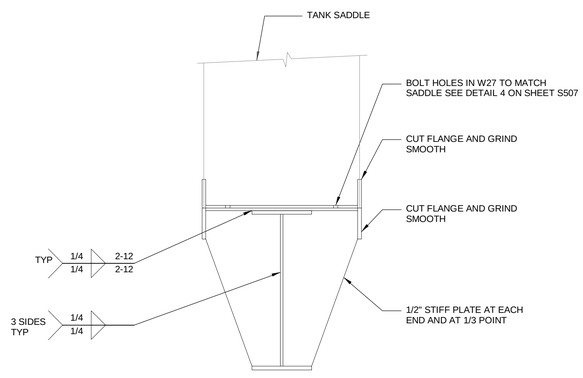

5 STORAGE TANK SADDLE CONNECTION
S106 | S506 1" = 1'-0"

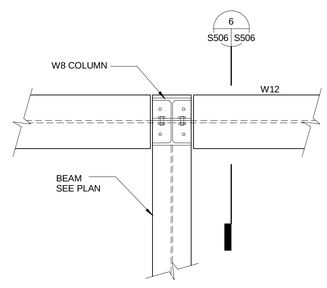

7 DETAIL
S106 | S506 1" = 1'-0"

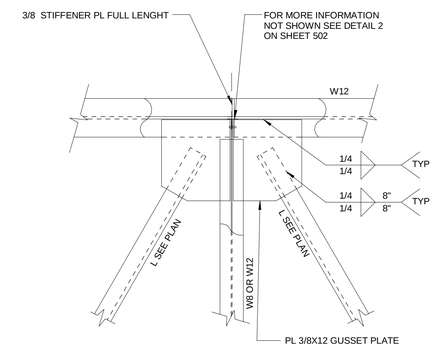

8 TYPICAL HORIZONTAL BRACING DETAIL
S106 | S506 1" = 1'-0"

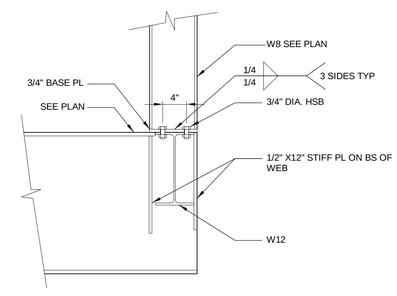

6 DETAIL
S506 | S506 1" = 1'-0"

ZONE	LETTER	DESCRIPTION	DRAWN	DATE	Approver APPRVD

REVISIONS

DRAWN F.BONALDI	DATE	Ames Research Center Moffett Field, California
DESIGNED A.FIROUZI	DATE	
CHECKED N.SHAH	DATE	
A&E PM G.HITE	DATE	REPLACE ARC JET COMPLEX SVS BOILER STRUCTURAL
NASA PM W.LEE	DATE	
REQUESTER G.RAICHE	DATE	DEAERATOR PLATFORM DETAILS
R&QA	DATE	
SAFETY/PSM	DATE	SIZE D · CAGE CODE 25307 · A 231-1300- S506 · REV
SUPERVISOR S. FRANKEL	DATE	SCALE: 1" = 1'-0" · INDEX · SHEET · OF

REGISTERED PROFESSIONAL ENGINEER
ALITA FIROUZI
No. 3535
STRUCTURAL
STATE OF CALIFORNIA

FILE NAME: 60212932_SVS-Boiler Plant_Stru-CENTRAL.rvt 12/12/12

C:\Users\wbonaldi\Documents\Revit2011\60212932_SVS-Boiler Plant_Stru-CENTRAL_wbonaldi.rvt
1/28/2013 12:58:50 PM

AECOM: 60212932.0001

DWG NO. A231-1300- S507 | SH. | REV

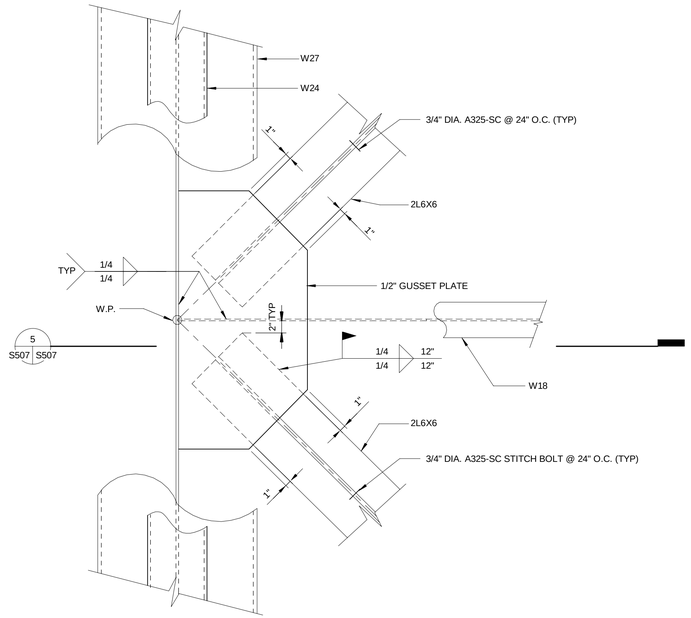

1 S106 S507 DETAIL 1" = 1'-0"

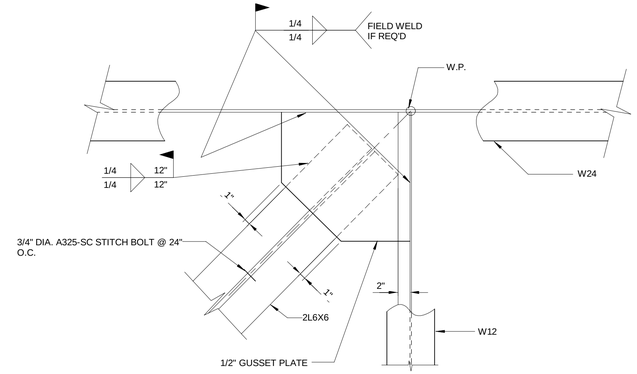

NOTE: COLUMN ABOVE NOT SHOWN FOR CLARITY.

2 S106 S507 DETAIL 1" = 1'-0"

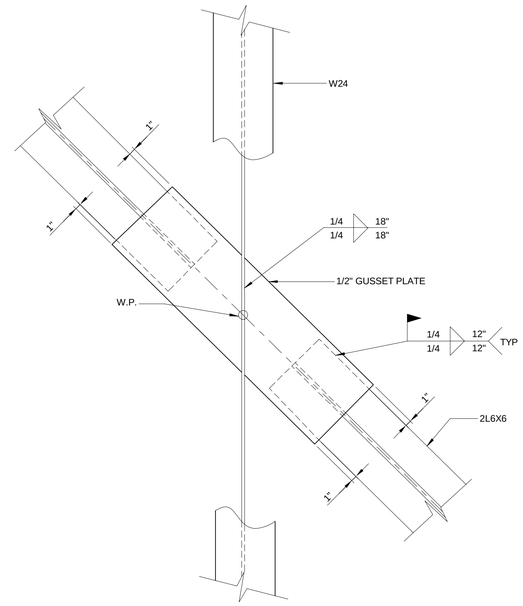

3 S106, S105 S507 DETAIL 1" = 1'-0"

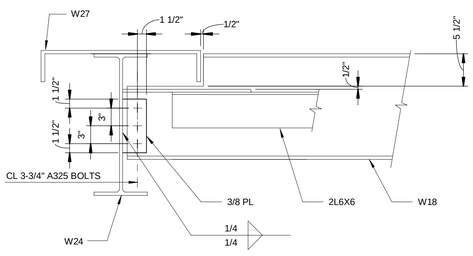

5 S507 S507 DETAIL 1" = 1'-0"

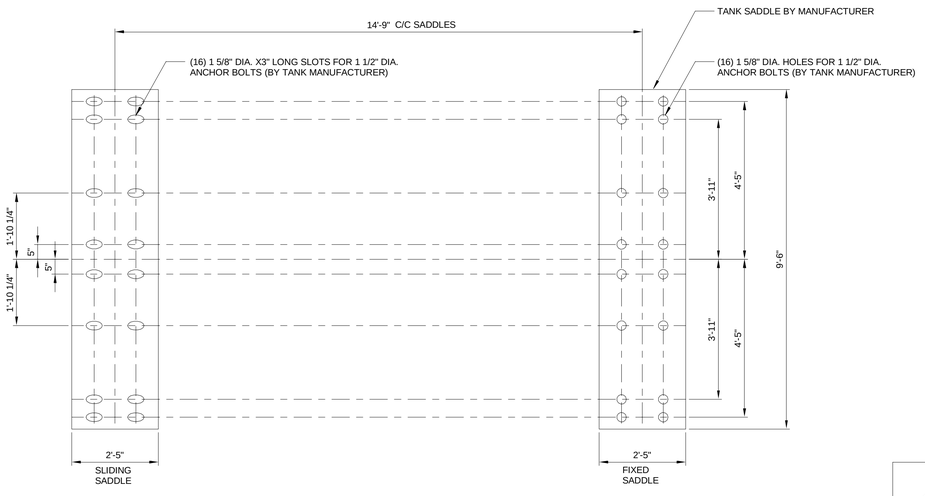

4 S507 S507 STORAGE TANK FOOTPRINT 1/2" = 1'-0"

ZONE	LETTER	DESCRIPTION	DRAWN	DATE	Approver APPRVD

REVISIONS

DRAWN F.BONALDI	DATE	Ames Research Center Moffett Field, California
DESIGNED A.FIROUZI	DATE	
CHECKED N.SHAH	DATE	REPLACE ARC JET COMPLEX SVS BOILER STRUCTURAL
A&E PM G.HITE	DATE	
NASA PM W.LEE	DATE	DEAERATOR PLATFORM DETAILS
REQUESTER G.RAICHE	DATE	
R&QA	DATE	
SAFETY/PSM	DATE	
SUPERVISOR S. FRANKEL	DATE	

REGISTERED PROFESSIONAL ENGINEER AZITA FIROUZ No. 3535 STRUCTURAL STATE OF CALIFORNIA

SIZE	CAGE CODE		REV
D	25307	A 231-1300- S507	
SCALE: As indicated	INDEX	SHEET	OF

FILE NAME: 60212932_SVS-Boiler Plant_Stru-CENTRAL.rvt 12/12/12

C:\Users\wbonald\Documents\Revit\2011\60212932_SVS-Boiler Plant_Stru-CENTRAL_wbonaldi.rvt
1/28/2013 12:58:51 PM

AECOM: 60212932.0001

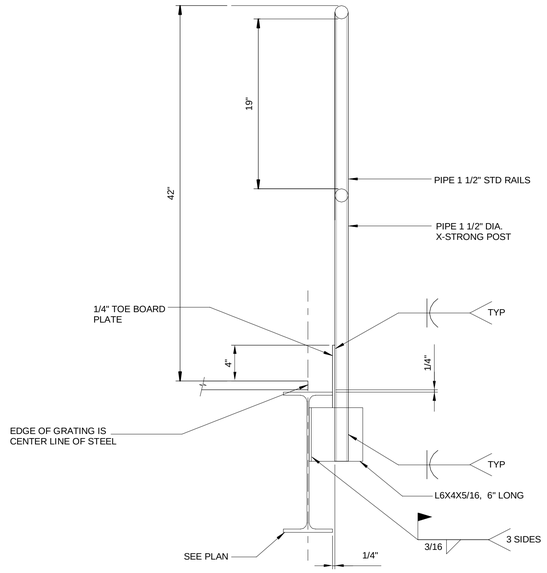

1 S508 | S508 TYPICAL RAILING CONNECTION
1 1/2" = 1'-0"

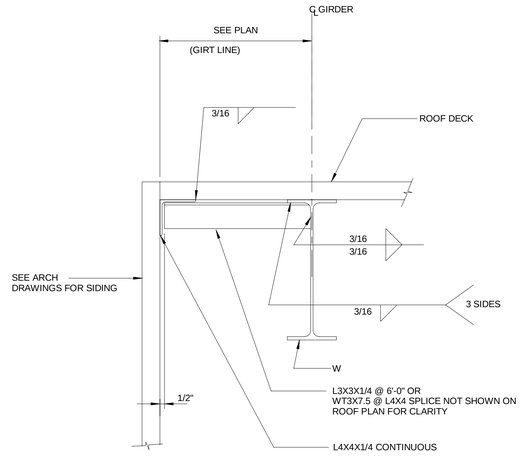

2 S104, S103 | S508 ROOF SECTION
1 1/2" = 1'-0"

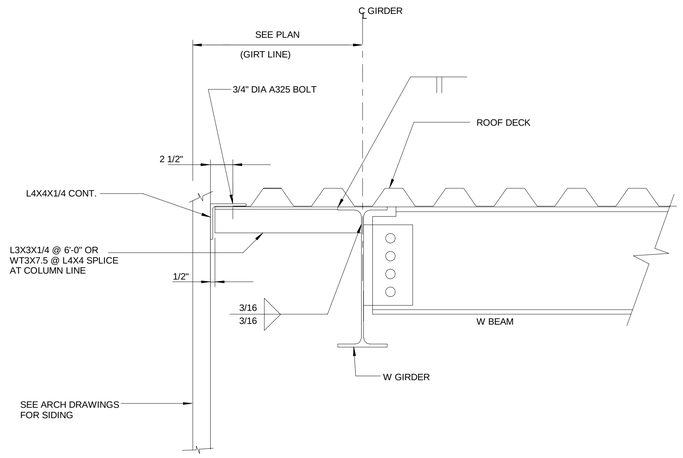

3 S104, S103 | S508 ROOF SECTION
1 1/2" = 1'-0"

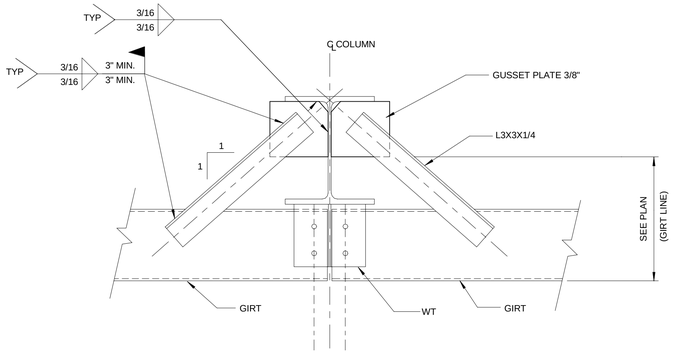

NOTE: FOR MORE INFORMATION NOT SHOWN SEE DETAILS ON SHEET S509

4 S202, S201 | S508 TYPICAL COLUMN BRACE DETAL @ ELEVATION
25'-4" - PLAN VIEW
1 1/2" = 1'-0"

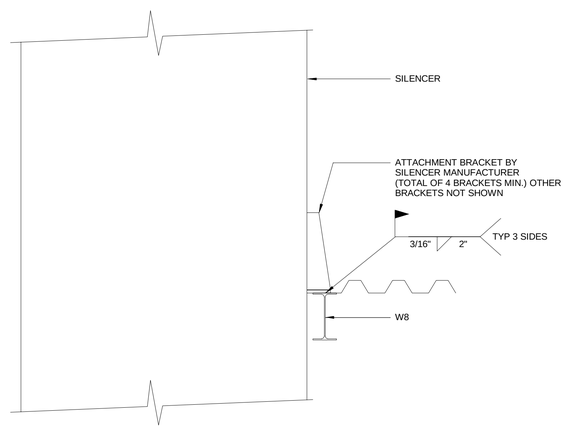

5 S104 | S508 SILENCER EQUIPMENT
1" = 1'-0"

ZONE	LETTER	DESCRIPTION	DRAWN	DATE	Approver APPRVD

REVISIONS

DRAWN F.BONALDI	DATE	Ames Research Center Moffett Field, California
DESIGNED A.FIROUZI	DATE	
CHECKED N.SHAH	DATE	REPLACE ARC JET COMPLEX SVS BOILER STRUCTURAL
A&E PM G.HITE	DATE	
NASA PM W.LEE	DATE	DETAILS
REQUESTER G.RAICHE	DATE	
R&QA	DATE	
SAFETY/PSM	DATE	SIZE D · CAGE CODE 25307 · A 231-1300- S508 · REV
SUPERVISOR S. FRANKEL	DATE	SCALE: As indicated · INDEX · SHEET · OF

REGISTERED PROFESSIONAL ENGINEER AZITA FIROUZ No. 3535 STRUCTURAL STATE OF CALIFORNIA

FILE NAME: 60212932_SVS-Boiler Plant_Stru-CENTRAL.rvt 12/12/12

C:\Users\wbonald\Documents\Revit2011\60212932_SVS-Boiler Plant_Stru-CENTRAL_wbonaldi.rvt
1/28/2013 12:58:51 PM

AECOM: 60212932.0001

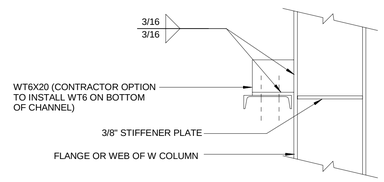

1 S509 S509 TYPICAL GIRT CONNECTION - SECTION
1" = 1'-0"

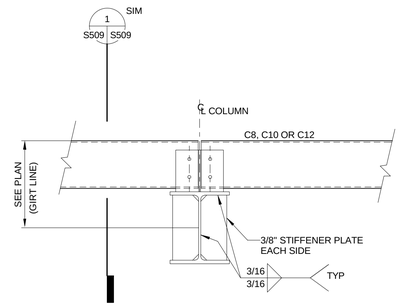

NOTE: FOR MORE INFORMATION NOT SHOWN SEE DETAIL 3 ON SHEET S507

2 S202, S201 S509 TYPICAL GIRT CONNECTION @ COLUMN FLANGE
1" = 1'-0"

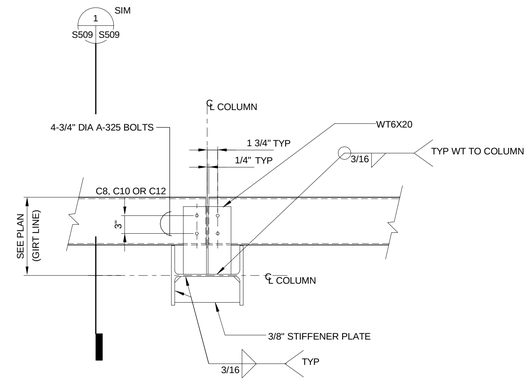

3 S509 S509 TYPICAL GIRT CONNECTION @ COLUMN WEB
1" = 1'-0"

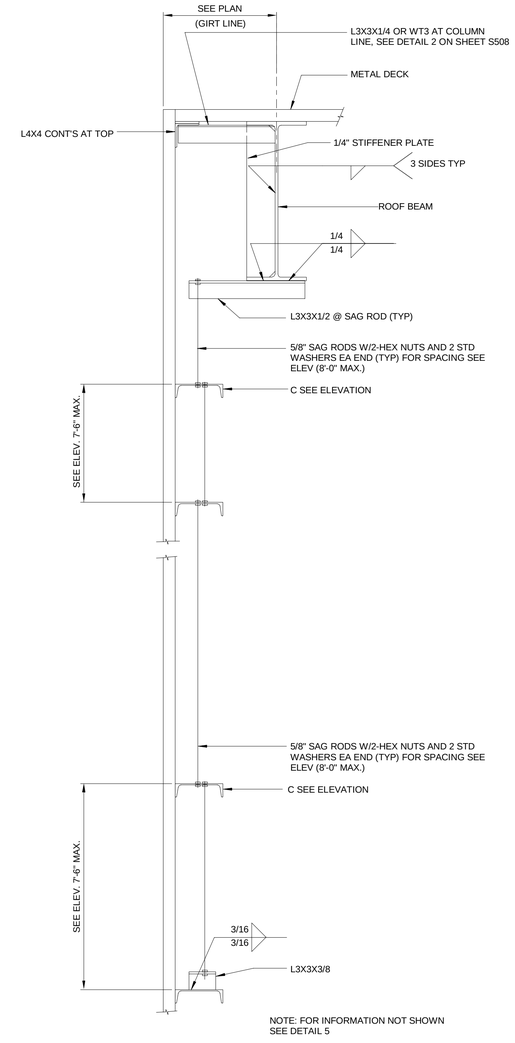

NOTE: FOR INFORMATION NOT SHOWN SEE DETAIL 5

6 S201 S509 SAG ROD CONNECTION @ BEAM AND GIRTS
1" = 1'-0"

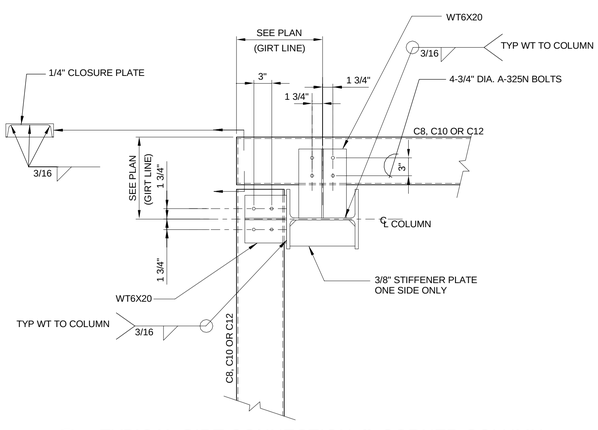

4 S509 S509 TYPICAL GIRT CONNECTION @ CORNER COLUMN
1" = 1'-0"

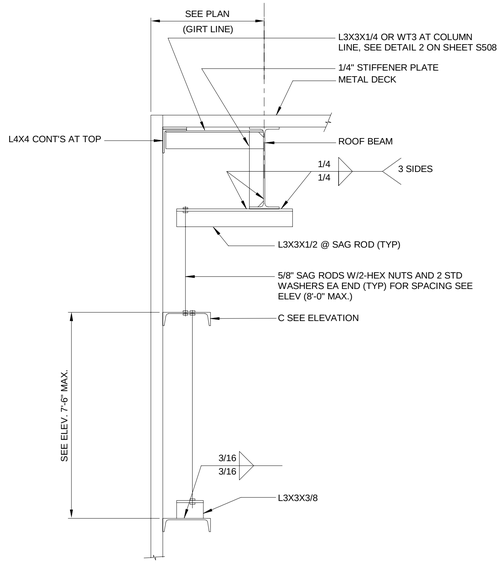

TYPICAL SAG ROD CONNECTION @ BEAM AND GIRTS

5 S203, S201 S509
1" = 1'-0"

ZONE	LETTER	DESCRIPTION	DRAWN	DATE	Approver APPRVD

REVISIONS

DRAWN F.BONALDI	DATE	Ames Research Center Moffett Field, California
DESIGNED A.FIROUZI	DATE	
CHECKED N.SHAH	DATE	REPLACE ARC JET COMPLEX SVS BOILER STRUCTURAL
A&E PM G.HITE	DATE	
NASA PM W.LEE	DATE	DETAILS
REQUESTER G.RAICHE	DATE	
R&QA	DATE	
SAFETY/PSM	DATE	SIZE D · CAGE CODE 25307 · A 231-1300- S509 · REV
SUPERVISOR S. FRANKEL	DATE	SCALE: 1" = 1'-0" · INDEX · SHEET · OF

REGISTERED PROFESSIONAL ENGINEER AZITA FIROUZI No. 3535 STRUCTURAL STATE OF CALIFORNIA

FILE NAME: 60212932_SVS-Boiler Plant_Stru-CENTRAL.rvt 12/12/12

C:\Users\wbonaldi\Documents\Revit2011\60212932_SVS-Boiler Plant_Stru-CENTRAL_wbonaldi.rvt
1/28/2013 12:58:52 PM

AECOM: 60212932.0001

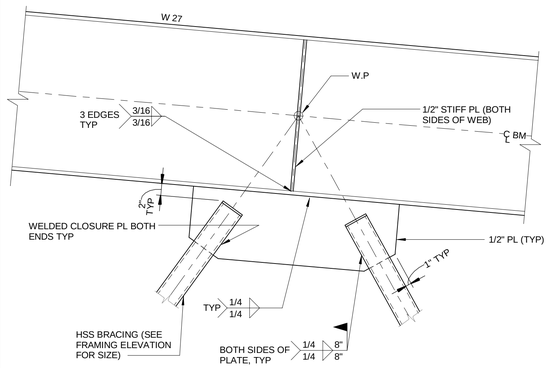

1 S203 S510 TYPICAL BRACE CONNECTION
1" = 1'-0"

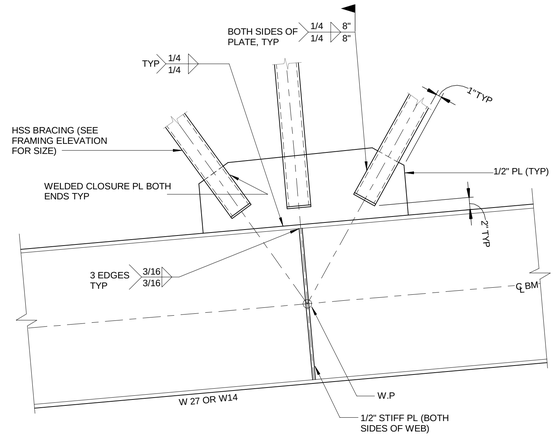

2 S203, S201 S510 TYPICAL BRACE CONNECTION
1" = 1'-0"

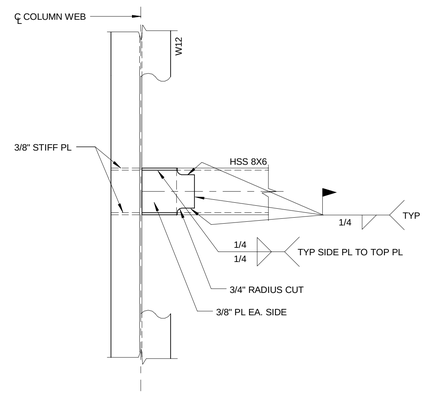

6 S510 S510 DETAIL
1" = 1'-0"

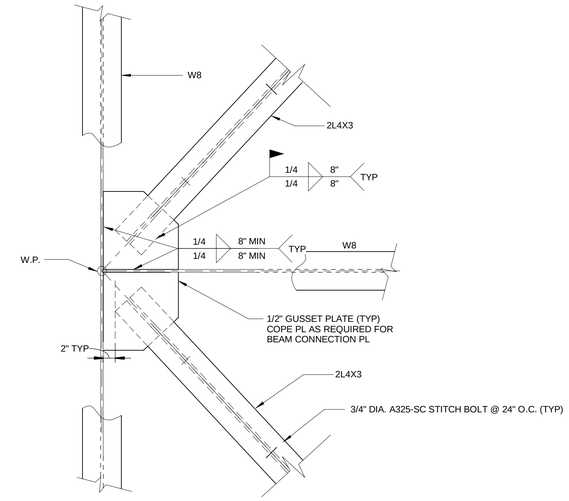

3 S105 S510 DETAIL
1" = 1'-0"

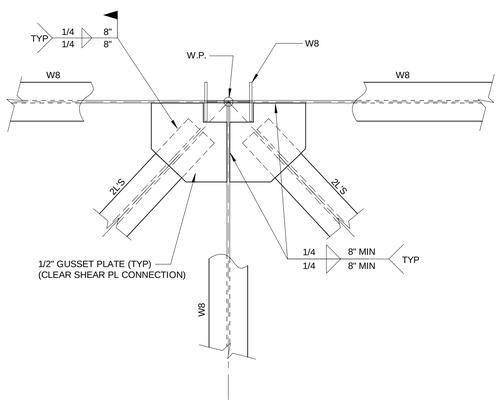

4 S105 S510 DETAIL
1" = 1'-0"

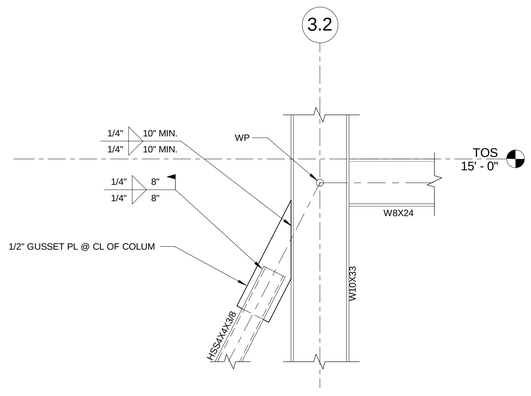

5 S105, S206 S510 BRACING ELEVATION AT LINE B3 - BEAM CONNECTION
1" = 1'-0"

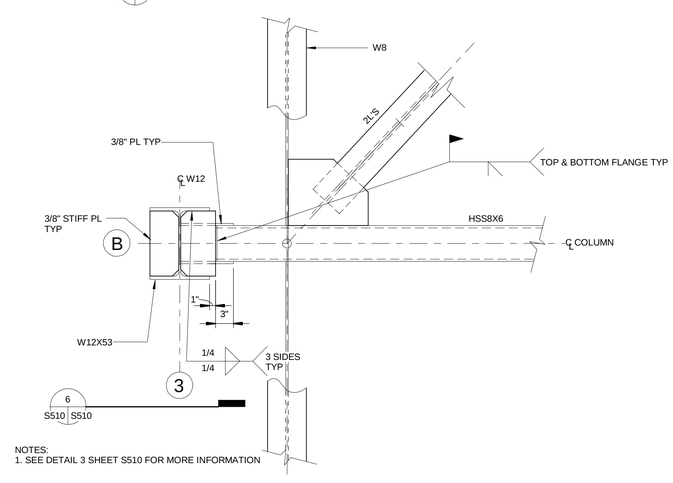

NOTES:
1. SEE DETAIL 3 SHEET S510 FOR MORE INFORMATION

7 S105 S510 DETAIL
1" = 1'-0"

ZONE	LETTER	DESCRIPTION	DRAWN	DATE	Approver APPRVD

REVISIONS

DRAWN F.BONALDI	DATE	Ames Research Center Moffett Field, California
DESIGNED A.FIROUZI	DATE	
CHECKED N.SHAH	DATE	REPLACE ARC JET COMPLEX SVS BOILER STRUCTURAL
A&E PM G.HITE	DATE	
NASA PM W.LEE	DATE	DETAILS
REQUESTER G.RAICHE	DATE	
R&QA	DATE	
SAFETY/PSM	DATE	SIZE D · CAGE CODE 25307 · A 231-1300- S510 · REV
SUPERVISOR S. FRANKEL	DATE	SCALE: 1" = 1'-0" · INDEX · SHEET · OF

REGISTERED PROFESSIONAL ENGINEER AZITA FIROUZ No. 3535 STRUCTURAL STATE OF CALIFORNIA

FILE NAME: 60212932_SVS-Boiler Plant_Stru-CENTRAL.rvt 12/12/12

C:\Users\wbonald\Documents\Revit\2011\60212932_SVS-Boiler Plant_Stru-CENTRAL_wbonaldi.rvt
12/9/2013 12:58:53 PM

AECOM: 60212932.0001

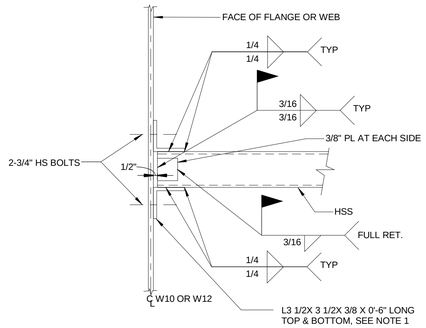

1 S105 S511 DETAIL
1 1/2" = 1'-0"

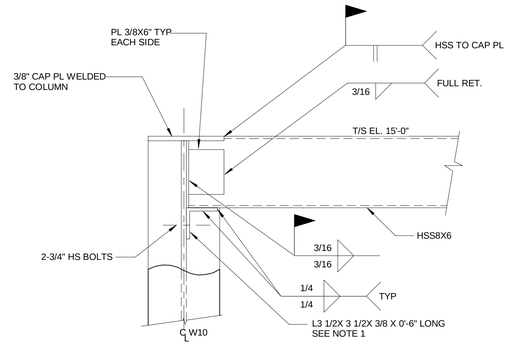

2 S105 S511 DETAIL
1 1/2" = 1'-0"

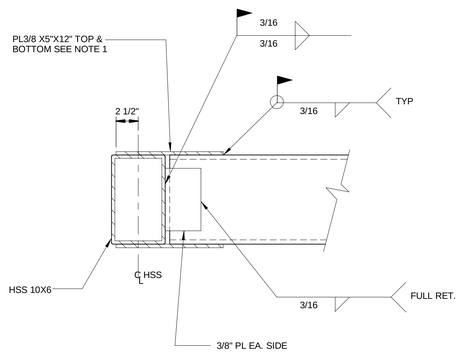

3 S105 S511 DETAIL
1 1/2" = 1'-0"

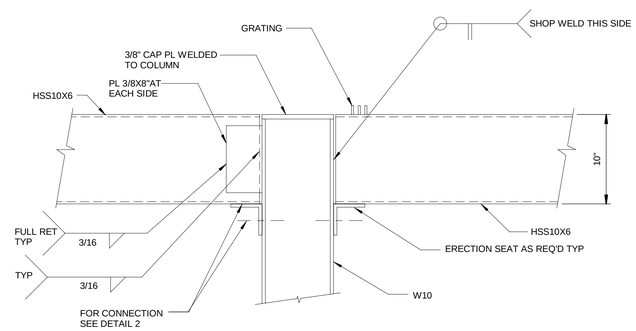

4 S105 S511 DETAIL
1 1/2" = 1'-0"

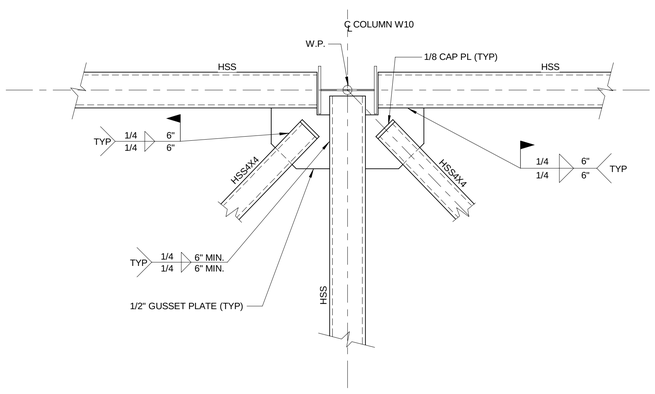

5 S105 S511 DETAIL
1" = 1'-0"

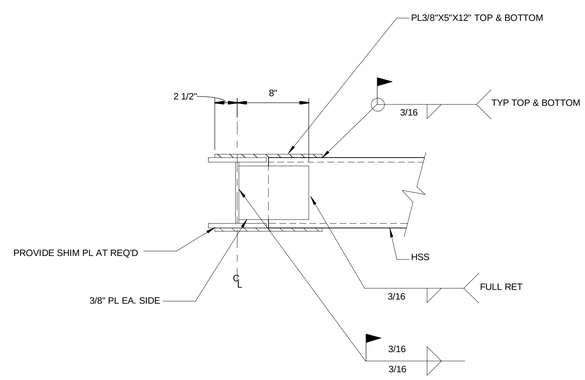

6 S105 S511 DETAIL
1 1/2" = 1'-0"

SHEET NOTES

1. CONTRACTOR AT HIS OPTION MAY CONNECT HSS TO FACE OF COLUMN FLANGE OR WEB; OR HSS GIRDER TO HSS BEAM WITH COMPLETE PENETRATION SQUARE FIELD WELD ALL AROUND. OMIT TOP AND BOTTOM ANGLE AND SIDE PLATES AND PROVIDE ERECTION SEAT ANGLE AS REQUIRED.

ZONE	LETTER	DESCRIPTION	DRAWN	DATE	APPRVD
					Approver

REVISIONS

DRAWN F.BONALDI	DATE	Ames Research Center Moffett Field, California
DESIGNED A.FIROUZI	DATE	
CHECKED N.SHAH	DATE	REPLACE ARC JET COMPLEX SVS BOILER STRUCTURAL
A&E PM G.HITE	DATE	
NASA PM W.LEE	DATE	DETAILS
REQUESTER G.RAICHE	DATE	
R&QA	DATE	
SAFETY/PSM	DATE	SIZE D · CAGE CODE 25307 · A 231-1300- S511 · REV
SUPERVISOR S. FRANKEL	DATE	SCALE: As indicated · INDEX · SHEET · OF

REGISTERED PROFESSIONAL ENGINEER AZITA FIROUZI No. 3535 STRUCTURAL STATE OF CALIFORNIA

FILE NAME: 60212932_SVS-Boiler Plant_Stru-CENTRAL.rvt 12/12/12

AECOM: 60212932.0001

C:\Users\wbonald\Documents\Revit\2011\60212932_SVS-Boiler Plant_Stru-CENTRAL_wbonaldi.rvt
1/29/2013 12:58:54 PM

LEGEND & ABBREVIATIONS

(NOT ALL ITEMS ARE USED)

&	AND
@	AT
Ø	ROUND OR DIAMETER
#	POUND OR NUMBER
A	AMPERE
(A)	ABANDONED
AABC	ASSOCIATED AIR BALANCING COUNCIL
ACM	ASBESTOS CONTAINING MATERIAL
AFF	ABOVE FINISHED FLOOR
AFG	ABOVE FINISHED GRADE
AFUE	ANNUAL FUEL UTILIZATION EFFICIENCY
AG	AIR GAP
AHWS	AUXILIARY HEATING WATER SUPPLY
AHWR	AUXILIARY HEATING WATER RETURN
AL	ALUMINUM
AMB	AMBIENT TEMPERATURE
ANSI	AMERICAN NATIONAL STANDARDS INSTITUTE
AP	ACCESS PANEL
APD	AIR PRESSURE DROP ("WG)
ASCE	AMERICAN SOCIETY OF CIVIL ENGINEERS
ASHRAE	AMERICAN SOCIETY OF HEATING REFRIGERATING AND AIR CONDITIONING ENGINEERS
ASME	AMERICAN SOCIETY OF MECHANICAL ENGINEERS
ASTM	AMERICAN SOCIETY FOR TESTING AND MATERIALS
AV	ATMOSPHERIC VENT
AVG	AVERAGE
AX	AXIAL
BAAQMD	BAY AREA AIR QUALITY MANAGEMENT DISTRICT
BD	BLOWDOWN
BDD	BACKDRAFT DAMPER
BPVC	BOILER & PRESSURE VESSEL CODE
BPVC 1	BOILER & PRESSURE VESSEL CODE, SECTION 1
BBFV	BALANCING BUTTERFLY VALVE
BF	BLIND FLANGE
BFP	BACKFLOW PREVENTER
BFD	BOILER FEEDWATER DRAIN
BFR	BOILER FEEDWATER RECILCULATION
BFS	BOILER FEEDWATER SUCTION
BFW	BOILER FEEDWATER DISCHARGE
BFV	BUTTERFLY VALVE
BHP	BRAKE HORSEPOWER
BLDG	BUILDING
BOP	BOTTOM OF PIPE
BSS	BASE SPRING SUPPORT
BTU	BRITISH THERMAL UNIT
BTP	BUILD-TO-PRINT SCOPE
BTUH	BTU PER HOUR
BV	BALL VALVE
BW	BUTT WELD
CBD	CONTINUOUS BLOWDOWN
CEMS	CONTINUOUS EMISSIONS MONITORING SYSTEM
CF	CHEMICAL FEED
CFF	CAP FOR FUTURE CONNECTION
CFM	CUBIC FEET PER MINUTE
CKV	CHECK VALVE
CMTR	CERTIFIED MATERIAL TEST REPORT
CO	CARBON MONOXIDE
COL	COLUMN
CONC	CONCRETE
COTR	CONTRACTING OFFICER'S TECHNICAL REPRESENTATIVE
CS	CALCIUM SILICATE
CTE	CONNECT TO EXISTING
CTW	COOLING TOWER WATER
CU FT	CUBIC FEET
CU IN	CUBIC INCH
D	DRAIN
DAH	DEAERATING HEATER
DALT	DUCT AIR LEAKAGE TEST
dB	DECIBEL
D-B	DESIGN-BUILD SCOPE
DB	DRY BULB
DEFL	DEFLECTION
DCW	DOMESTIC COLD WATER
DIA	DIAMETER
DISCH	DISCHARGE
DIV	DIVISION
DOE	U.S. DEPARTMENT OF ENERGY
DPT	DEW POINT TEMPERATURE
DWG	DRAWING
DWV	DRAIN / WASTE / VENT
(E)	EXISTING
EA	EACH
EAT	ENTERING AIR TEMPERATURE
EFF	EFFICIENCY
EGT	EXISTING GAS TEMPERATURE
EL	ELEVATION
ELEC	ELECTRICAL
EQ	EQUAL
EQPT	EQUIPMENT
EPDM	ETHYLENE PROPYLENE DIENE MONOMER
ESP	EXTERNAL STATIC PRESSURE
ET	EXPANSION TANK
EWT	ENTERING WATER TEMPERATURE
EXP	EXPANSION
EXT	EXTERNAL
°F	DEGREES FAHRENHEIT
(F)	FUTURE
F&T	FLOAT & THERMOSTATIC STEAM TRAP
FA	FROM ABOVE
FACP	FIRE ALARM CONTROL PANEL
FB	FROM BELOW
FC	FLEXIBLE CONNECTION
FCO	FLOOR CLEANOUT
FFD	FUNNEL FLOOR DRAIN
FG	FIBERGLASS
FIG	FIGURE
FLA	FULL LOAD AMPERE
FMCS	FACILITY MANAGEMENT CONTROL SYSTEM
FNPT	FEMALE NATIONAL PIPE THREAD
FPM	FEET PER MINUTE
FPS	FEET PER SECOND
FSM	FACILITY SAFETY MANAGER
FT (')	FEET
FTG	FOOTING
FW	FEEDWATER
FWD	FEEDWATER DRAIN
FWR	FEEDWATER RETURN
FWDA	FEEDWATER DEAERATING SYSTEM

G	GAS
GA	U.S. GAUGE (OR GAGE)
GAL	GALLONS
GALV	GALVANIZED
GBV	GLOBE VALVE
GCO	GRADE CLEANOUT
GFE	GOVERNMENT FURNISHED EQPT
GI	GALVANIZED IRON
GLV	GLOBE VALVE
GN	GENERAL NOTE
GPH	GALLONS PER HOUR
GPM	GALLONS PER MINUTE
GRD	GROUND
GSM	GALVANIZED SHEET METAL
GV	GATE VALVE
H	HEIGHT
HB	HOSE BIBB (WALL FAUCET)
HD	HEAD
HGT	HEIGHT
H-O-A	HAND-OFF-AUTOMATIC SWITCH
HORZ	HORIZONTAL
HP	HORSEPOWER
HPC	HIGH PRESSURE CONDENSATE
HPS	HIGH PRESSURE STEAM
HR	HOURS
HTB	HYDROSTATIC TEST BOUNDARY
HWR	HEATING WATER RETURN
HWS	HEATING WATER SUPPLY
HZ	FREQUENCY (HERTZ)
IA	INSTRUMENT AIR
IAW	IN ACCORDANCE WITH
IB	INERTIA BASE
IBD	INTEMITTENT BLOWDOWN
ICF	INSTANTANEOUS CIRCUIT FLOW (MAXIMUM AMPS)
ICW	INDUSTRIAL COLD WATER
ID	INSIDE DIAMETER
IE	INVERT ELEVATION
IFC	IN FURRED CEILING
IFW	IN FURRED WALL
IN (")	INCHES
"WG	INCHES WATER GAUGE
IPS	IRON PIPE (THREAD) SIZE
IV	INDUSTRIAL VENT
IVB	INVERTED BUCKET STEAM TRAP
IW	INDUSTRIAL WASTE
KN	KEY NOTE
KW	KILOWATTS
KWH	KILOWATT-HOUR
LAT	LATERAL
LB, LBS	POUNDS
LCV	LEVEL CONTROL VALVE
LGT	LEAVING GAS TEMPERATURE
LPS	LOW PRESSURE STEAM
LR	LONG RADIUS ELBOW
LRA	LOCKED ROTOR AMPERE
LPC	LOW PRESSURE CONDENSATE
LPS	LOW PRESSURE STEAM
LWT	LEAVING WATER TEMPERATURE
MAX	MAXIMUM
MAWP	MAXIMUM ALLOWABLE WP
MBH	THOUSAND BTU PER HOUR
MBFV	MOTORIZED BUTTERFLY VALVE
MCA	MINIMUM CIRCUIT AMPACITY
MC	MOTOR CONTROL
MCC	MOTOR CONTROL CENTER
MECH	MECHANICAL
MER	MECHANICAL EQUIPMENT ROOM
MFR	MANUFACTURER
MFS	MAXIMUM FUSE SIZE
MH	MANHOLE
MHP	MOTOR HORSEPOWER
MIN	MINIMUM
MISC	MISCELLANEOUS
MNPT	MALE NATIONAL PIPE THREAD
MOCP	MAXIMUM OVERLOAD CIRCUIT PROTECTION
MOV	MOTOR OPERATED VALVE
MPa	MEGAPASCAL
MPG	MEDIUM PRESSURE GAS
MS	MOTOR STARTER
MSS	MANUFACTURERS STANDARDIZATION SOCIETY
MTD	MOUNTED
N/A	NOT APPLICABLE
N/C	NORMALLY CLOSED
NDE	NON-DESTRUCTIVE EXAMINATION
NEBB	NATIONAL ENVIRONMENTAL BALANCING BUREAU
NEC	NATIONAL ELECTRIC CODE (NFPA 72)
NEMA	NATIONAL ELECTRICAL MANUFACTURERS ASSOCIATION
NH3	AMMONIA
NFPA	NATIONAL FIRE PROTECTION ASSOCIATION
NIC	NOT IN CONTRACT
NO.	NUMBER
N/O	NORMALLY OPEN
NPSH	NET POSITIVE SUCTION HEAD
NPT	NATIONAL PIPE THREAD
OAS	OR ACCEPTABLE SUBSTITUTE
OAL	OVERALL LENGTH
OC	ON CENTER
OD	OUTSIDE DIAMETER
ODP	OPEN DRIP PROOF
OPER	OPERATING
OSA	OUTSIDE AIR
OSHA	OCCUPATIONAL SAFETY AND HEALTH ACT
OS&Y	OUTSIDE SCREW AND YOKE
OV	OUTLET VELOCITY
PA	PIPE ANCHOR
PD	PUMPED DISCHARGE
ΔP	DIFFERENTIAL PRESSURE (DROP)
PEX	CROSS-LINKED POLYETHYLENE
PERF	PERFORATION SIZE
PFF	PLUG FOR FUTURE
PG	PRESSURE GAUGE
PH	ELECTRICAL PHASE
PL	PLATE
PLC	PROGRAMMABLE LOGIC CONTROLLER

PLCS	PLACES
POC	POINT OF CONNECTION
POD	POINT OF DISCONNECTION
PP	POLYPROPYLENE
PPH	POUNDS PER HOUR
PPM	PARTS PER MILLION
PRV	PRESSURE REDUCING VALVE (ASSEMBLY)
PSB	PRESSURE SEAL BONNET
PSF	POUNDS PER SQUARE FOOT
PSI	POUNDS PER SQUARE INCH
PSIA	PSI (ABSOLUTE)
PSID	PSI DIFFERENTIAL
PSIG	PSI (GAUGE)
PT	PARTICLE WELD TEST (MAG OR LIQUID)
PTT	PRESSURE & TEMPERATURE TEST PLUG
PVC	POLYVINYL CHLORIDE
QC	QUALITY CONTROL
QTY	QUANTITY
(R)	RELOCATED
REF	REFERENCE ONLY (FIELD VERIFY)
REQ'D	REQUIRED
REV	REVISION
RLA	RUNNING (RATED) LOAD AMPERES
RO	REVERSE OSMOSIS
RPM	REVOLUTIONS PER MINUTE
RPZ	REDUCED PRESSURE ZONE BACKFLOW PREVENTION ASSEMBLY
RT	RADIOGRAPHIC WELD TEST
RV	RELIEF VALVE
RVD	RELIEF VALVE DISCHARGE
SCH	PIPE SCHEDULE
SCR	SELECTIVE CATALYTIC REDUCTION SYSTEM
SCW	SOFT COLD WATER
SD	STORM DRAIN
SF	SQUARE FEET
SG	SPECIFIC GRAVITY
SH	SPRING HANGER
SLVA	SPRING LOADED VARIABLE AREA
SN	SHEET NOTE
SOF	SLIP-ON FLANGE
SOV	SHUTOFF VALVE (MANUAL)
SQ	SQUARE
SQ IN	SQUARE INCHES
SQV	SHUT OFF VALVE
SP	STATIC PRESSURE
SPEC	SPECIFICATION
SPW	SOFT PREHEATED WATER
SR	SHORT RADIUS ELBOW
SRV	SAFETY RELIEF VALVE
SS	STAINLESS STEEL
SSPC	SOCIETY FOR PROTECTIVE COATINGS
STD	STANDARD
SUCT	SUCTION
SVS	STEAM VACUUM SYSTEM
SW	SOCKET WELD, SAMPLE WATER
TAB	TESTING, ADJUSTING AND BALANCING
TCV	TEMPERATURE CONTROL VALVE
TD	THERMODYNAMIC
TDH	TOTAL DYNAMIC HEAD
TEFC	TOTALLY ENCLOSED FAN COOLED
TEMP	TEMPERATURE
TSP	TWISTED SHIELDED PAIR
TYP	TYPICAL
UG	UNDERGROUND
UL	UNDERWRITER LABORATORIES
UNK	PIPE (UNKOWN SERVICE, MATERIAL AND SIZE)
UON	UNLESS OTHERWISE NOTED
USSG	UNITED STATES STANDARD GAUGE
UTT	ULTRASONIC THICKNESS EXAMINATION
V	VOLT, SANITARY VENT
VA	VOLT-AMPERE
VAC	VACUUM
VB	VACUUM BREAKER
VEL	VELOCITY
VERT	VERTICAL
VFD	VARIABLE FREQUENCY DRIVE
VOC	VOLATILE ORGANIC COMPOUNDS
VOL	VOLUME
VTR	VENT TO ATMOSPHERE THROUGH ROOF
W	WATER
W/	WITH
W/O	WITHOUT
WCO	WALL CLEANOUT
"WG	FEET (WATER GAUGE) PRESSURE
WMS	WIRE MESH SCREEN
WNF	WELDING NECK FLANGE
WOG	WATER, OIL AND GAS
WP	WORKING PRESSURE
WPD	WATER PRESSURE DROP ("WG)
WT	WEIGHT
(X2)	(TYPICAL OF 2)

SYMBOL	DESCRIPTION
02 / X	EQUIPMENT TAG WITH SEQUENCE NUMBER
X	KEY NOTE TAG
X	HYDROSTATIC TEST BOUNDARY TAG
XXX	PIPE SUPPORT TAG SEQUENCE NUMBER
XX-1	PLUMBING FIXTURE TAG WITH SEQUENCE NUMBER
	POINT OF CONNECTION
	POINT OF DISCONNECTION
	EXISTING MECHANICAL ITEM TO BE REMOVED
	EXISTING MECHANICAL ITEM TO REMAIN
	NEW MECHANICAL ITEM OR WORK
	CALIBRATED BALANCING VALVE (CIRCUIT SETTER) CHECK VALVE (CKV)
FLV	AUTOMATIC FLOW LIMITING VALVE (PRESSURE INDEPENDENT)
	FLEXIBLE PIPE CONNECTION (NEOPRENE TYPE)
	FLEXIBLE PIPE CONNECTION (BELLOWS TYPE)
	GATE VALVE
	GATE VALVE (SOCKET)
	BALL VALVE (FLANGED)
	BALL VALVE
	BUTTERFLY VALVE (BFV)
	BUTTERFLY VALVE (DOUBLE LINE)
	PLUG VALVE
	CHECK VALVE
	GLOBE VALVE
	PRESSURE REDUCING VALVE (PILOT OPERATED)
	3-WAY CONTROL VALVE
	2-WAY CONTROL VALVE
	2-WAY DIAPHRAGM VALVE
M	MOTORIZED CONTROL VALVE
	SAFETY RELIEF VALVE
	NEEDLE VALVE
	PUMP
	MANUAL AIR VENT
	PRESSURE AND TEMPERATURE TEST PLUG
	SHUT-OFF COCK
	TRIPLE DUTY VALVE
	STRAINER WITH BLOW-DOWN VALVE
	BASKET STRAINER (SIMPLEX)
	ANSI FLANGED CONNECTION
	ORIFICE TYPE FLOW MEASURING STATION
	RUPTURE DISC
	HYDROSTATIC NH3 RELIEF VALVE
	UNION CONNECTION
	PIPE CAP
	PIPE PLUG
	STEAM TRAP ASSEMBLY
	PIPE SUPPORT
	PIPE GUIDE
	PIPE ANCHOR
	PIGTAIL STEAM SYPHON
T	DRY BULB TEMPERATURE SENSOR (WALL MOUNT)
ΔP	DIFFERENTIAL PRESSURE INDICATOR
HB	HOSE BIBB

SYMBOL	DESCRIPTION
X" XXX	PIPE SIZE - PIPE SYSTEM
A	SHOP COMPRESSED AIR
AHWR	AUXILIARY HEATING WATER RETURN
AHWS	AUXILIARY HEATING WATER SUPPLY
BFD	BOILER FEEDWATER DRAIN
BFR	BOILER FEEDWATER RECIRCULATION
BFS	BOILER FEEDWATER PUMP SUCTION
BFW	BOILER FEEDWATER PUMP DISCHARGE
CF	CHEMICAL FEED
CBD	CONTINUOUS BLOWDOWN
	DOMESTIC COLD WATER (DCW)
DCW	DOMESTIC COLD WATER
	DOMESTIC HOT WATER (DHW)
DHW	DOMESTIC HOT WATER
D	DRAIN
G	LOW PRESSURE FUEL GAS (NATURAL)
HWS	HEATING WATER SUPPLY
HWR	HEATING WATER RETURN
HPS	HIGH PRESSURE STEAM (425 PSIG)
HPC	HIGH PRESSURE CONDENSATE
IBD	INTERMITTENT BLOWDOWN
ICW	INDUSTRIAL COLD WATER
IA	INSTRUMENT AIR
IV	INDUSTRIAL WASTE VENT
IW	INDUSTRIAL WASTE
LPS	LOW PRESSURE STEAM
LPC	LOW PRESSURE CONDENSATE
MPG	MEDIUM PRESSURE FUEL GAS (NATURAL)
PD	PUMPED DISCHARGE
RVD	RELIEF VALVE DISCHARGE
RO	REVERSE OSMOSIS RECLAIMED WATER
SW	SAMPLE WATER
SCW	SOFT COLD WATER
SD	STORM DRAIN
SPW	SOFT PREHEATED WATER
SVS	STEAM VACUUM SYSTEM HPS (275 PSIG)
VAC	VACUUM
V	VENT TO ATMOSPHERE
W	SITE COLD WATER (W)
	PIPE REDUCER (ECCENTRIC)
	PIPE REDUCER (CONCENTRIC)
	PIPE DOWN
	PIPE UP
	PIPE CAP
	BLIND PADDLE FOR HYDROSTATIC TEST
	FLANGE WELD TEST PLUG

WELDING SYMBOLS: REFER TO ANSI/AWS A2.4

INSTRUMENT LEGEND

XYY
- INSTRUMENT DESCRIPTOR
- INSTRUMENT TYPE

INSTRUMENT TYPE ("X")

AS	ANTI-SURGE
A	ANALYSIS
B	BURNER FLAME
C	CONDUCTIVITY
CP	CORROSION PROBE
D	DENSITY
F	FLOW
H	HAND (MANUAL)
K	TIME OR SCHEDULE
L	LEVEL
P	PRESSURE OR VACUUM
R	RESTRICTION
S	SOLENOID
SC	SAMPLE VALVE
T	TEMPERATURE
TD	TEMPERATURE DIFFERENTIAL
U	MULTI VARIABLE
V	VIBRATION
X	MISCELLANEOUS
Z	POTION
ZO	POSITION OPEN
ZC	POSITION CLOSED
ZS	LIMIT SWITCH

INSTRUMENT DESCRIPTOR ("YY")

A	ALARM
AH	ALARM HIGH
AHH	ALARM HIGH SHUTDOWN
AL	ALARM LOW
ALL	ALARM LOW SHUTDOWN
C	CONTROLLER
CV	CONTROL VALVE
E	ELEMENT
G	GLASS OR GAUGE
I	INDICATOR
IC	INDICATOR CONTROLLER
O	ORIFICE
P	POINT
R	RECORDER
RC	RECORDER CONTROLLER
S	SWITCH
SE	SAFETY ELEMENT
SH	SWITCH HIGH
SHH	SWITCH HIGH SHUTDOWN
SL	SWITCH LOW
SLL	SWITCH LOW SHUTDOWN
SV	SAFETY VALVE
T	TRANSMITTER
NY	BIAS & LOW LIMIT
V	VALVE
W	WELL OR PROBE
Y	RELAY OR COMPUTE

PHOTO — GRAPHIC REFERENCE DESCRIPTION

1 / A1 A5
- REFERENCE IDENTIFICATION NUMBER
- SHEET WHERE SHOWN
- SHEET FROM WHICH REFERENCED

TEXT REFERENCE DESCRIPTION

1/A2
- SHEET WHERE REFERENCE IS SHOWN
- REFERENCE IDENTIFICATION NUMBER

REGISTERED PROFESSIONAL ENGINEER MICHAEL S. CALLAHAN No. M21188 MECHANICAL STATE OF CALIFORNIA

ZONE	LETTER	DESCRIPTION	DRAWN	DATE	APPRVD

REVISIONS

DRAWN J.HO	DATE
DESIGNED M.CALLAHAN	DATE
CHECKED P.YALLOURIS	DATE
A&E PM G.HITE	DATE
NASA PM W.LEE	DATE
REQUESTER G.RAICHE	DATE
R&QA	DATE
SAFETY/PSM	DATE
SUPERVISOR S.FRANKEL	DATE

Ames Research Center
Moffett Field, California

REPLACE ARC JET COMPLEX SVS BOILER
MECHANICAL

MECHANICAL LEGEND, SYMBOLS AND ABBREVIATIONS

SIZE	CAGE CODE		REV
D	25307	A 231-1300-M001	
SCALE NONE		INDEX	SHEET OF

FILE NAME: 231-M001.DWG 12/12/12

DWG: R:\234A\60212932.0001 (K11027) Replace Arc Jet Complex SVS Boiler Final Design\500 CAD\MiSheet\231-M001_LEGEND.dwg Version: 18.1s (LMS Tech) User: jjho
DATE: Feb 01, 2013 - 12:46:16 pm

MECHANICAL GENERAL NOTES

1. GENERAL: ALL BUILDING ELEMENTS, MATERIALS AND EQUIPMENT SHALL BE NEW, UNLESS CALLED OUT AS EXISTING (E). PROVIDE ALL LABOR AND MATERIAL FOR A COMPLETE OPERATING INSTALLATION. OBTAIN ALL PERMITS REQUIRED BY LOCAL AGENCIES FOR DEMOLITION, CLOSURE AND NEW WORK.

2. SCOPE OF WORK: PROVIDE ALL SUPERVISION, LABOR, EQUIPMENT, TOOLS, MATERIALS, INSTALLATION AND TESTING TO COMPLETE THE WORK AS INDICATED FOR A COMPLETE OPERATING INSTALLATION. CONTRACT DOCUMENTS DO NOT INDICATE MEANS, METHODS, PROCEDURES OR SEQUENCE OF CONSTRUCTION. COMPLETE SCOPE INCLUDES BUILD-TO-PRINT ELEMENTS AS LISTED BELOW, AND DESIGN-BUILD FOR THE REMAINDER OF WORK.

3. BUILD TO PRINT SCOPE OF WORK: CENTRAL EQUIPMENT AND COMMON PIPING SERVING MULTIPLE STEAM BOILERS. BRANCH PIPING TO STEAM BOILERS THAT IS SUPPORTED BY COMMON PIPE SUPPORT STRUCTURE. ALL PIPING ON PIPING ISOMETRIC DETAILS, UNLESS IDENTIFIED AS DESIGN-BUILD. REFER TO PIPING DIAGRAMS FOR LIMIT OF BUILD-TO-PRINT PIPING.

4. DESIGN-BUILD SCOPE OF WORK: STEAM BOILERS, AND CONNECTED EQUIPMENT SUCH AS DRAFT FANS, ECONOMIZERS, BURNERS, EMISSIONS CONTROL AND MONITORING, BREACHING AND FLUE STACKS, WATER SOFTENING AND WATER TREATMENT SYSTEMS, PLATFORMS AND CATWALKS REQUIRED FOR STEAM BOILER MAINTENANCE. PIPING CONNECTED TO DESIGN-BUILD EQUIPMENT, AND AS DESIGNATED. SUPPORTING STRUCTURE FOR DESIGN-BUILD ELEMENTS.

5. PREPARATION: BEFORE PERFORMING MECHANICAL WORK, BECOME FULLY ACQUAINTED WITH JOB CONDITIONS AND REQUIREMENTS OF THE CONTRACT DOCUMENTS. NOTIFY COR IN WRITING OF ALL DISCREPANCIES AND OMISSIONS IN THE CONTRACT DOCUMENTS, OR CONFLICTS WITH EXISTING CONDITIONS. OBTAIN RESOLUTION AND APPROVAL OF COR BEFORE PROCEEDING WITH ANY ELEMENT OF THIS PROJECT.

6. SUBMITTALS: SUBMIT PRODUCT DATA FOR ITEMS LISTED IN MECHANICAL EQUIPMENT SCHEDULES. SUBMIT SHOP DRAWINGS. SUBMIT TEST PLANS. SUBMIT REPORTS FOR ALL TESTS. SUBMIT CERTIFICATIONS. SUBMIT COMMISSIONING PLAN. INCLUDE ALL OTHER SPECIFIED SUBMITTALS.

7. PROJECT CLOSEOUT: SUBMIT FINAL CERTIFIED TAB REPORT, OUTSIDE AIR CERTIFICATION, AND ALL TEST, INSPECTION, MATERIAL CMTR, AND QC REPORTS.

8. RECORD DRAWINGS: RECORD "AS-BUILT" INFORMATION ON ALL SERVICES BEING INSTALLED AND ALL (E) SERVICES UNCOVERED DURING CONSTRUCTION. KEEP RECORD DRAWING SET CLEAN AND IN GOOD CONDITION AT JOBSITE. INCLUDE FINAL VALVE AND INSTRUMENT TAGS NUMBERS. RECORD 13 DIGIT NASA EQUIPMENT NUMBER ON ALL (E) EQUIPMENT TO BE REMOVED FROM SERVICE.

9. EXISTING CONDITIONS: (E) MECHANICAL WORK IS SHOWN ONLY WHERE NECESSARY TO ESTABLISH RELATIONSHIPS OR CONNECTION POINTS WITH NEW WORK, AND MAY NOT BE SHOWN TO SCALE. NOT ALL (E) DUCTS, PIPES AND EQUIPMENT ARE SHOWN. PLAN DIMENSIONS FOR (E) CONDITIONS ARE FOR REFERENCE ONLY. FIELD VERIFY EXACT SIZE AND LOCATION OF (E) SERVICES PRIOR TO ORDERING MATERIAL OR CONSTRUCTION. VERIFY REQUIRED CLEARANCES TO EXISTING MECHANICAL AND ELECTRICAL EQUIPMENT. NOTIFY COR IF FIELD CONDITIONS DIFFER FROM THE PLANS.

10. EXISTING STRUCTURAL: CUTTING, DRILLING OR MODIFYING ANY EXISTING STRUCTURAL MEMBERS IS FORBIDDEN WITHOUT PRIOR APPROVAL FROM COR. DO NOT USE EXISTING SVS STRUCTURE TO HOIST EQUIPMENT OR MATERIALS.

11. COORDINATION: COORDINATE WORK AND INSTALLATION BETWEEN ALL TRADES AND WORKMEN. COORDINATE ELECTRICAL POWER SOURCES AND REQUIREMENTS FOR MECHANICAL EQUIPMENT AND MOTORIZED DEVICES.

12. RESTORATION: PROTECT (E) FINISHES FROM ACCIDENTAL DAMAGE. REPLACE DAMAGED CEILING TILES AND T-BARS. REPLACE OR REPAIR DAMAGED FINISHES. PERFORM PATCHING, FRAMING AND PAINTING BY WORKERS QUALIFIED IN THOSE TRADES. REPAIR OR REPLACE WITH NON-HAZARDOUS MATERIALS. MATCH (E) OR ADJACENT FINISH AND COLOR.

13. DEMOLITION: REMOVE EQUIPMENT AND PIPES, INCLUDING SUPPORTS, THAT ARE NOT TO BE REUSED. CAP (E) PIPES AND DUCTS TO REMAIN. RECORD 13 DIGIT NASA EQUIPMENT NUMBER ON ALL (E) EQUIPMENT TO BE REMOVED FROM SERVICE, AND SUBMIT NUMBERS TO COR. DISPOSE OF MERCURY THERMOMETERS PER NASA APR 8800.3, CHAPTER 4.

14. BASIS OF DESIGN: EQUIPMENT LISTED IN SCHEDULES REPRESENT BASIS OF DESIGN. EQUIPMENT LAYOUT AND SERVICE ACCESS CLEARANCE SHOWN ON PLANS IS BASED ON THESE ENGINEERED SELECTIONS. CONTRACTOR PROPOSED EQUIPMENT SELECTIONS MAY HAVE DIMENSIONS AND CLEARANCE REQUIREMENTS WHICH DIFFER FROM THAT ILLUSTRATED ON PLANS. APPROVAL OF CONTRACTOR PROPOSED EQUIPMENT SELECTIONS IS CONDITIONAL ON CONTRACTOR PROVIDING ALL ADJUSTMENTS AND COORDINATING ALL CONNECTING SERVICES REQUIRED FOR A FULLY FUNCTIONAL SYSTEM, WITHOUT ADDITIONAL COST TO GOVERNMENT.

15. MECHANICAL IDENTIFICATION: IDENTIFY NEW SYSTEMS PER ANSI/ASME A13.1-2007. INCLUDE DIAGRAM AND LISTING OF EQUIPMENT AND VALVES. COLOR CODE (PAINT) EXPOSED PIPING AND OUTSIDE SURFACE OF NON-METALLIC INSULATION JACKETS.

16. SUPPLEMENTAL SUPPORTS AND MISCELLANEOUS STRUCTURAL STEEL: FINISH AS SPECIFIED FOR STRUCTURAL STEEL. TOUCH UP CUT OR ABRAIDED SURFACES.

17. EQUIPMENT ANCHOR BOLTS: REFER TO STRUCTURAL DRAWINGS FOR ANCHOR BOLT SPECIFICATIONS AND REQUIREMENTS. ANCHOR ROD: AS NOTED ON STRUCTURAL DWGS.

18. PIPE SUPPORT ANCHOR BOLTS: REFER TO DETAILS FOR SPECIFICATIONS. REFER TO STRUCTURAL DRAWINGS FOR ANCHOR BOLT INSTALLATION AND TESTING REQUIREMENTS. ANCHOR ROD: TYPE 316 STAINLESS STEEL THREADED ROD, UON.

19. DUCTWORK: GALVANIZED SHEET STEEL. RECTANGULAR DUCT FIRST DIMENSION IS SIDE VIEWED; SECOND DIMENSION IS PERPENDICULAR TO VIEW. ALL DIMENSIONS ARE SHOWN IN INCHES. ALL SIZES ARE CLEAR INSIDE DIMENSIONS. REFER TO DALT SCHEDULE FOR PRESSURE AND SMACNA SEAL CLASS. SEAL ALL LONGITUDINAL AND TRANSVERSE JOINTS AIR TIGHT WITH DUCT MASTIC PER SMACNA SEAL CLASS. CERTIFY DUCT LEAKAGE MEETS TITLE 24 REQUIREMENTS.

20. DUCT ACCESSORIES: PROVIDE MANUAL BALANCING DAMPERS IN ALL BRANCH DUCTS TO AIR OUTLETS OR INLETS, REGARDLESS OF WHETHER SHOWN ON PLAN. LOCATE BALANCING DAMPER AS FAR AS POSSIBLE FROM AIR OUTLET OR INLET.

21. DUCT INSULATION: INSULATE INDOOR SUPPLY DUCTS WITH MINIMUM R-VALUE=3.5.

22. FLEXIBLE DUCTS: CLASS 1 PER UL 181, MINIMUM R-VALUE OF 4.2, RATED FOR 5,000 FEET PER MINUTE VELOCITY, 6" WG POSITIVE PRESSURE, AND 1/2" WG NEGATIVE PRESSURE.

23. AIR INLETS AND OUTLETS: TITUS, PRICE, NAILOR OR APPROVED EQUAL. SEE AIR OUTLET AND INLET EQUIPMENT SCHEDULE FOR PERFORMANCE.

24. MOTORS: PREMIUM EFFICIENCY PER NEMA MG-1. INVERTOR-READY OR INVERTOR DUTY MOTOR FOR MOTORS WITH VFD DRIVE.

25. BACKFLOW PREVENTION: REDUCED PRESSURE ZONE TYPE BACKFLOW PREVENTION ASSEMBLY, CPC APPROVED, FOUNDATION FOR CROSS CONNECTION CONTROL AND RESEARCH (FCCCHR) LISTED. DIRECT DISCHARGE TO AREA WHERE WATER IS NOT A SLIP HAZARD.

26. WIRE MESH SCREEN: 1/4" MESH GALVANIZED STEEL WIRE 20 GA. (0.035" DIAMETER).

27. EQUIPMENT INSTALLATION: PROVIDE AND COMMISSION ALL EQUIPMENT PER MANUFACTURER'S WRITTEN INSTRUCTIONS AND RECOMMENDATIONS, AND IN ACCORDANCE WITH LISTING REQUIREMENTS. SUPPORT AND ANCHOR ALL EQUIPMENT. PROVIDE MINIMUM SERVICE AND REPAIR CLEARANCES PER MFR RECOMMENDATIONS, CODE REQUIREMENTS, DRAWINGS AND SPECIFICATIONS. PROVIDE PIPE REDUCERS AND DUCT TRANSITIONS WHERE REQUIRED FOR FINAL CONNECTION TO EQUIPMENT. PIPE HVAC CONDENSATE DRAINS TO APPROVED PLUMBING RECEPTORS WITH AIR BREAK. PERFORM UNIT START-UPS.

28. HOUSEKEEPING PADS: PROVIDE REINFORCED CONCRETE EQUIPMENT HOUSEKEEPING PADS PER STRUCTURAL DOCUMENTS FOR ALL BASE MOUNTED EQUIPMENT, UON. FORM 1" CHAMFER ON ALL TOP EDGES, UON. MINIMUM PAD HEIGHT IS 6" ABOVE FINISHED FLOOR OR ADJOINING GRADE, UON. EXTEND PAD MINIMUM 6" BEYOND FOOTPRINT OF APPROVED EQUIPMENT, OR FARTHER WHERE REQUIRED FOR ANCHOR BOLT MINIMUM EDGE DISTANCE OR MANUFACTURER'S RECOMMENDATION.

29. EQUIPMENT BRACING: EQUIPMENT SHALL BE SEISMICALLY QUALIFIED PER ASCE-7 SECTION 13.2. SEISMICALLY BRACE AND ANCHOR NEW EQUIPMENT PER ASCE-7 USING IMPORTANCE FACTOR = 1.5, AND INCLUDING NOZZLE LOADS FROM PIPE STRESS ANALYSIS. REFER TO S001 FOR LOAD COMBINATIONS AND RESPECTIVE ALLOWABLE STRESS. ANCHORAGE PRODUCTS SHALL HAVE ICC-ESS EVALUATION REPORT. SUBMIT ANCHORAGE CALCULATIONS. SUPPORTS INCLUDE ANCHORS, ADHESIVE, EPOXY, HANGERS, CLAMPS, BRACES, GROUTING AND SHIMS. SUBMIT CALCULATIONS BY STRUCTURAL ENGINEER REGISTERED IN STATE OF CALIFORNIA FOR ATTACHMENTS TO STRUCTURE. INCLUDE EXPLICIT CONSIDERATION OF ASCE 7 CHAPTER 15 FOR NON-BUILDING STRUCTURES HAVING NON-RIGID CHARACTERISTICS, HYDRODYNAMIC LOADS, FLUID-STRUCTURE INTERACTION LOADS (SLOSHING), AND COUPLING BETWEEN VESSELS AND THEIR SUPPORT STRUCTURES.

30. WATER TREATMENT: TREATMENT MANUFACTURER MUST CERTIFY THE TREATMENT SYSTEM IS INTENDED FOR PLANNED USAGE.

31. PIPE INSTALLATION: SIZES SHOWN ON THE DRAWINGS ARE NOMINAL. REAM CUT ENDS TO FULL PIPE DIAMETER. PROVIDE 1/2" MANUAL AIR VENT AT ALL LOCAL HIGH POINTS, AND 1/2" DRAIN VALVES AT ALL LOCAL LOW POINTS OF WATER PIPES. INSTALL STRAINERS FOR STEAM SERVICE WITH BASKET AND SCREEN HORIZONTAL, TYPICAL. DO NOT INSTALL WATER PIPING ABOVE ELECTRICAL EQUIPMENT. INSTALL HORIZONTAL PIPES WITH MINIMUM 7'-0" HEADROOM CLEARANCE IN MECHANICAL ROOMS, UON. PROVIDE QUALIFIED WELDERS FOR WELDED PIPE. TORQUE OR TIGHTEN FLANGE BOLTS PER ASME PCC-1 (2010).

32. PIPE INSULATION: PERFORM UTT OF PIPE SPOOLS PRIOR TO INSTALLING INSULATION AND SUBMIT DATED REPORT. MAINTAIN 3" MIN. CLEARANCE BETWEEN INSULATED PIPES, AND INSULATED PIPES AND PARALLEL SURFACES. MAINTAIN MINIMUM 2" MIN. CLEARANCE BETWEEN INSULATED PIPES AND NON-PARALLEL SURFACES.

33. PIPE SUPPORT AND SEISMIC BRACING: COMPLY WITH GOVERNING CODE AS LISTED IN PIPE SYSTEM DATA SCHEDULE ON M603. FOR NONCRITICAL PIPING, DESIGN BRACING TO RESIST SEISMIC FORCES PER ASCE-7 AND CBC, AS NOTED IN DESIGN CRITERIA REPORT. FOR CRITICAL PIPING, DESIGN SUPPORTS AND BRACING TO RESIST CALCULATED LOADS FROM PIPING DESIGN ANALYSIS AND MEET RESTRAINT STIFFNESS SPECIFICATION PROVIDED IN THESE DRAWINGS. REFER TO S001 FOR LOAD COMBINATIONS AND RESPECTIVE ALLOWABLE STRESS OF SUPPORTS AND BRACING. COMPLY WITH MSS SP-58 AND MSS SP-127. PROVIDE ROD STIFFENERS AT BRACES IF UNBRACED HANGER LENGTH EXCEEDS 19". SUBMIT STAMPED STRUCTURAL CALCULATIONS OF PIPE SUPPORT AND BRACING DESIGN, WITH COMPUTER MODELS IF USED. COMPUTER MODELS USED MUST BE RISA, CAESAR II. OTHER SOFTWARE IS ACCEPTABLE IF MODEL IS CONVERTED FOR USE BY RISA OR CAESAR II.

34. VALVE INSTALLATION: PROVIDE VALVES FOR SHUT-OFF SERVICE AT EACH PIECE OF EQUIPMENT, AND WHERE INDICATED ON PLANS. ALL VALVES AND PIPING SYSTEM SPECIALTIES SHALL BE FULL-LINE SIZE, UON. INSTALL VALVES WITH STEM AT OR ABOVE THE HORIZONTAL CENTERLINE OF THE PIPE. INSTALL VALVE SO ACTUATOR HAS SUFFICIENT CLEARANCE FOR PROPER OPERATION AND MAINTENANCE. PROVIDE CHAIN OPERATOR FOR VALVES INSTALLED OVER 6'-0" AFF.

35. DUCTWORK AND PIPES: PROVIDE OFFSETS AND TRANSITIONS REQUIRED FOR A COMPLETE INSTALLATION, AT NO ADDITIONAL COST TO GOVERNMENT. INSTALL ALL WORK 1" MINIMUM FROM STRUCTURE, WALLS, CEILINGS AND EQUIPMENT.

36. SUPPLEMENTAL STEEL: ATTACH ANCHORS, SUPPORTS AND BRACING FOR EQUIPMENT, DUCTS AND PIPES DIRECTLY TO CONCRETE OR STRUCTURAL STEEL ONLY. DO NOT ATTACH TO ROOF DECK. PROVIDE SUPPLEMENTAL STRUCTURAL STEEL WHERE UPPER ATTACHMENT CANNOT BE MADE DIRECTLY TO STRUCTURAL FRAMING. SUPPLEMENTAL STRUCTURAL STEEL AND CONNECTIONS SHALL BE AS SPECIFIED FOR BUILDING FRAMING.

37. PUMP INSTALLATION: PROVIDE PRESSURE GAUGES AND TEST PORTS AT SUCTION AND DISCHARGE OF ALL PUMPS. PROVIDE ASME UV STAMPED PRESSURE RELIEF VALVE AT DISCHARGE OF ALL POSITIVE DISPLACEMENT PUMPS.

38. ALLOWABLE NOZZLE LOADS: DESIGN NOZZLES ON EQUIPMENT AND VESSELS TO RESIST LOADS WHICH EQUAL OR EXCEED VALUES LISTED IN ALLOWABLE NOZZLES LOAD SCHEDULE ON M601, UNLESS OTHERWISE NOTED. DESIGN-BUILD PIPING SHALL BE DESIGNED TO LIMIT NOZZLE LOADS ON EQUIPMENT AND VESSELS TO LESS THAN ALLOWABLE NOZZLES LOAD AVAILABLE FROM MANUFACTURER. SUBMIT ALLOWABLE NOZZLE LOADS.

39. PRESSURE VESSEL DESIGN: ALL PRESSURE VESSELS MUST BE REGISTERED WITH NATIONAL BOARD OF BOILER AND PRESSURE VESSEL INSPECTORS. PERFORM DESIGN AND ANALYSIS USING EITHER COMPRESS OR PV-ELITE SOFTWARE, UNLESS OTHERWISE APPROVED IN WRITING BY COR. SUBMIT DETAILED DESIGN ANALYSIS CALCULATIONS WITH VESSEL SHOP DRAWINGS AT DESIGNATED DESIGN REVIEW MILESTONES. SUBMIT FINAL DESIGN ANALYSIS CALCULATIONS AND SHOP DRAWINGS AT PROJECT CLOSEOUT WITH ALL APPROVED AS-BUILT DEVIATIONS FULLY INCORPORATED.

40. PRESSURE VESSEL FABRICATION: PERFORM DETAILED ULTRASONIC THICKNESS EXAMINATION (UTT) ON ALL PRESSURE VESSELS. UTT EXAMINE HEAD AND SHELL SURFACES, AND ALL INDIVIDUAL COURSES AND PLATES. SUBMIT REPORTS OF UTT EXAMINATION RESULTS AT PROJECT CLOSEOUT.

41. PRESSURE VESSEL INSTALLATION: PROVIDE OVERPRESSURE PROTECTION FOR ALL PRESSURIZED VESSELS. PROVIDE ASME SAFETY RELIEF VALVES. PROVIDE PRESSURE GAGES AND PRESSURE AND TEMPERATURE TEST PORTS AT INLET AND OUTLET OF ALL PRESSURIZED VESSELS.

42. SAFETY RELIEF VALVES: ASME DESIGN. SUBMIT SET PRESSURE TEST CERTIFICATES, AND OTHER FUNCTIONAL TEST REPORTS FROM ASME ORIGINAL VALVE MANUFACTURER. SUBMIT CALIBRATION RECORDS FOR ALL PRESSURE GAUGES. TERMINATE PIPE OUTLET OF STEAM RELIEF VENTS AT 10' ABOVE ROOF WITH PRESSURE BALANCING TEE AND MITERED OPENINGS, UON. PIPE OUTLET OF LIQUID RELIEF VALVES TO DISCHARGE SAFELY OVER NEAREST FUNNEL DRAIN WITH AIR BREAK.

43. THERMAL RELIEF: PROVIDE ASME RELIEF VALVE FOR RELIEF OF PRESSURE DUE TO THERMALFLUID EXPANSION IN ANY SECTION OF PIPE ISOLATED BETWEEN VALVES WHERE ALLOWABLE STRESS LIMITS OR EQUIPMENT PRESSURE LIMITS COULD BE EXCEEDED.

44. CONTROLS: REFER TO INSTRUMENTATION AND CONTROLS DRAWINGS AND SPECIFICATIONS. CONTROL DIAGRAMS ARE SCHEMATIC REPRESENTATIONS ONLY INTENDING TO SHOWN THE BASIC CONFIGURATION. PROVIDE ALL ADDITIONAL CONTROL ITEMS NECESSARY TO MEET THE FUNCTIONAL REQUIREMENTS OF THE SEQUENCE OF OPERATION, AND SPECIFICATIONS. PROVIDE COMPLETE SYSTEM WHICH IS FUNCTIONAL IN ALL RESPECTS. TEST FOR CONFORMANCE TO THE PERFORMANCE REQUIREMENTS. COMMISSION INTO OPERATION, AND CALIBRATE UNDER OPERATING CONDITIONS.

45. HVAC ROOM SENSORS: MOUNT ROOM SENSORS ON WALL AT 44" ABOVE FINISHED FLOOR, UON.

46. INSTRUMENTATION: INSTALL THERMOMETERS, GAGES AND INSTRUMENTATION SO THEY ARE READABLE FROM ACCESSIBLE LOCATIONS. REFER TO INSTRUMENTATION AND CONTROLS DRAWINGS AND SPECIFICATIONS. BPVC 1 GOVERNS BOILER INSTRUMENT PIPING FROM BOILER TO FIRST SOV. ASME B31.1 GOVERNS INSTRUMENT PIPING BEYOND BPVC 1 BOUNDARY.

47. PIPE PRE-CLEANING: PURGE ALL NEW PIPING WITH SHOP AIR AFTER FABRICATION AND BEFORE THE FINAL CLOSE-OUT WELD OR FINAL BOLT-UP IS MADE. PURGE AT A MINIMUM AIR VELOCITY OF 15 FEET PER SECOND UNTIL NO FOREIGN MATTER, WATER, OR OIL IS VISIBLE AT PIPE EXIT. CAP CLEANED PIPING AT BOTH ENDS FOR SHIPMENT TO AVOID ENTRY OF FOREIGN MATTER INSIDE PIPE.

48. PIPE CLEANING: DO NOT FLUSH THROUGH EQUIPMENT. ISOLATE EQUIPMENT DURING FLUSHING AND CLEANING OPERATION BY UTILIZING BYPASS. FLUSH PIPING AND DRAIN. FILL PIPING WITH CLEAN WATER AND CLEANING SOLUTION, CIRCULATE, FLUSH UNTIL CLEAR, AND NEUTRALIZE PIPING THOROUGHLY PER CLEANING PRODUCT MANUFACTURER'S INSTRUCTIONS. COMPLETE CLEANING BEFORE LEAK TESTING.

49. HYDROSTATIC PRESSURE TEST OF PIPING: PRESSURE TEST TO GOVERNING CODE REQUIREMENTS. SEE PIPE SYSTEM DATA SCHEDULE FOR GOVERNING CODE, TEST PRESSURE, AND TEST DURATION. TEST ALL PRESSURE RETAINING WELDS. ALL TESTS SHALL BE HYDROSTATIC. TEST SHALL BE WITNESSED BY AMES PRESSURE SYSTEM SAFETY ENGINEER OR HIS DESIGNATED TECHNICAL REPRESENTATIVE. ARC FORM 342 OR EQUIVALENT SHALL BE COMPLETED. TEST PIPING WITH WATER TO ZERO LEAKAGE FOR ACCEPTANCE. WHERE PERMITTED IN WRITING BY THE GOVERNMENT, HYDROSTATICALLY TEST FLANGE CLOSURE WELDS USING "EXPANSION SEAL TECHNOLOGIES" FLANGE WELD TEST PLUG, OR APPROVED EQUAL. REPAIR ANY LEAKS, AND REPEAT TESTS AT NO ADDITIONAL COST TO GOVERNMENT. COR SHALL WITNESS FINAL PIPE LEAK TESTING. SCHEDULE LEAK TEST FOR COR TO WITNESS.

50. HYDROSTATIC TEST PREPARATION: SUBMIT TEST PLAN. ISOLATE SECTION OF PIPING TO BE TESTED. SECURE PADDLE BLINDS AT TEST BOUNDARIES. DO NOT USE A VALVE FOR TEST BOUNDARY. INSTALL INSTALL FLANGE WELD TEST PLUGS TO TEST CLOSURE WELD TO EXISTING PIPING, IF APPROVED INSTALL TEMPORARY SUPPORTS WHERE NEEDED. REMOVE ALL TEST PLUGS, BLIND FLANGES AND TEMPORARY SUPPORTS UPON HYDROSTATIC PRESSURE TEST COMPLETION. LEAK TEST PIPING AFTER TEMPORARY PLUGS AND PADDLE BLINDS HAVE BEEN REMOVED.

51. TESTING & COMMISSIONING: SUBMIT AGENCY QUALIFICATIONS. PROVIDE FUNCTIONAL TEST OF ALL NEW EQUIPMENT AND CONTROLS PRIOR TO CONNECTION WITH EXISTING PLANT. PROVIDE SUPERVISED STARTUP OF EQUIPMENT BY FACTORY REPRESENTATIVE. SCHEDULE STARTUP AND ACCEPTANCE TEST WITH PLANT PERSONNEL AND COR.

52. TESTING AND BALANCING (TAB): SUBMIT CERTIFIED TAB REPORT AND OUTSIDE AIR CERTIFICATION PRIOR TO PROJECT CLOSEOUT.

53. HYDRONIC PRE-MEASUREMENT: PRIOR TO START OF HVAC WORK IN N231, MEASURE HWS FLOW RATE TO (E) EQUIPMENT IN N231 WITH CONTROL VALVES OPEN. BALANCE REPORT SHALL VERIFY THAT FLOW RATES TO (E) EQUIPMENT HAVE NOT BEEN DIMINISHED, AFTER NEW WORK IS COMPLETE

54. PIPE TEST & INSPECTION RECORDS: PREPARE AND SUBMIT TEST AND INSPECTION REPORTS FOR ALL PIPING SYSTEMS AND VESSELS REQUIRING HYDROSTATIC AND NONDESTRUCTIVE EXAMINATION TESTS. VT AND MT OR PT NDE REQUIRED FOR ALL WELDED CONNECTIONS. RT REQUIRED FOR FULL PENETRATION WELDED CONNECTIONS AS PER THE APPLICABLE CODE. ACCEPTANCE CRITERIA AS PER THE APPLICABLE CODE. SUBMIT TEST REPORTS AND RADIOGRAPHIC FILMS FOR FINAL ACCEPTANCE WITHIN 3 DAYS OF TEST COMPLETION. TEST REPORTS AND RADIOGRAPHIC FILMS SHALL BECOME PROPERTY OF THE GOVERNMENT. PERFORM DOUBLE LOADING RT FILM CASSETTES, IF CONTRACTOR REQUIRES RETENTION OF FILMS FOR THEIR OWN RECORD AFTER RECORDS TURNOVER PERIOD.

55. TITLE 24 (CALIFORNIA CODE OF REGULATIONS TITLE 24 PART 6) COMPLIANCE: TITLE 24 REQUIREMENTS APPLY TO WORK FOR CONTROL ROOM IN N231 ONLY. COMPLY WITH ALL APPLICABLE REQUIREMENTS. INSULATION PRODUCTS SHALL BE CERTIFIED BY STATE OF CALIFORNIA. COMPLY WITH EFFICIENCY REGULATIONS. SUBMIT INSTALLER CERTIFICATIONS.

56. PENETRATIONS: FIRESTOP ALL PENETRATIONS THROUGH RATED AND NON-RATED WALLS WITH UL LISTED FIRESTOP ASSEMBLY TO MATCH FIRE RATING OF CONSTRUCTION. PROVIDE CHROME PLATED ESCUTCHEONS AROUND EXPOSED PIPE PENETRATIONS.

57. PIPING DESIGN AND ANALYSIS: PERFORM PIPING DESIGN AND ANALYSIS FOR ALL DESIGN-BUILD PIPING SYSTEMS. PERFORM DYNAMIC PIPE STRESS ANALYSIS FOR ALL DESIGN-BUILD PIPING SYSTEMS NOTED AS CRITICAL IN PIPE SYSTEM DATA TABLE ON M603. PERFORM DYNAMIC ANALYSIS USING CURRENT RELEASE OF CAESAR II SOFTWARE IN ACCORDANCE WITH DESIGN CRITERIA REPORT. PERFORM DYNAMIC ANALYSIS USING RESPONSE SPECTRUM OR TIME HISTORY. DEVIATIONS SHALL NOT BE PERMITTED. NO REDUCTIONS FOR INELASTIC ENERGY ABSORPTION ARE ALLOWED. MULTIPLY DESIGN EARTHQUAKE ACCELERATIONS BY LISTED IMPORTANCE FACTOR. SUBMIT DYNAMIC PIPE STRESS MODELS AT DESIGNATED DESIGN REVIEW MILESTONES. INTEGRATE STRUCTURAL ELEMENTS USED FOR SUPPORTS AND BRACING INTO THE DYNAMIC MODEL, AND SUBMIT STRUCTURAL CALCULATIONS OF STIFFNESSES USED IN THE MODEL. SUBMIT RECORD PIPE STRESS MODEL AT PROJECT CLOSEOUT WITH ALL AS-BUILT DEVIATIONS FULLY INCORPORATED IN MODEL. SHOULD ANY PIPE SYSTEM MODIFICATIONS BE REQUIRED DURING CONSTRUCTION, DESIGN AND ANALYSIS SHALL BE REQUIRED AS SPECIFIED ABOVE FOR DESIGN-BUILD PIPING.

58. DESIGN-BUILD PIPING: ROUTING AND CONFIGURATION SHOWN ON DRAWINGS REPRESENTS THE BASIS OF DESIGN. FINAL ROUTING AND CONFIGURATION FOR EQUIPMENT CONNECTIONS SHALL BE BASED ON APPROVED FINAL SHOP DRAWINGS BY CONTRACTOR. SEE GENERAL NOTES FOR DESIGN AND ANALYSIS OF PIPING, SUPPORTS AND BRACING.

59. MECHANICAL SUBMITTALS: SUBMITTALS SHALL INCLUDE QUALITY CONTROL RECORDS, MATERIAL TEST REPORTS, COMPONENT AND EQUIPMENT VENDOR PRODUCT DATA, WELD MAPS, PERSONNEL CERTIFICATION RECORDS, ASME SECTION IX WELDING PROCEDURES, ASME SECTION IX WELDING AND WELDER QUALIFICATION RECORDS, AND ASME DATA REPORTS.

60. PIPE WELDING: PIPE WELDING SHALL COMPLY WITH APPLICABLE PIPING CODE AS LISTED ON M603. WHEN APPLICABLE PIPING CODE DOES NOT REQUIRE ASME STAMPING, PIPE WELDING SHALL BE PERFORMED WITHOUT ASME STAMPING BY A CONTRACTOR HAVING A CURRENT ASME S, U OR PP STAMP AUTHORIZATION IN FULL COMPLIANCE WITH THEIR ASME QUALITY ASSURANCE PROGRAM.

61. EQUIPMENT AND COMPONENT RATINGS: DETERMINE LOADS AND DEFLECTIONS APPLIED TO EQUIPMENT AND COMPONENT RATINGS USING Rp = 1. THIS INCLUDES, BUT IS NOT LIMITED TO, EXTERNAL LOADS ON VESSEL, PUMP AND VALVE NOZZLES, EXPANSION JOINT END DEFLECTIONS AND LOADS, EXTERNAL FLANGE LOADINGS, ETC.

AMMONIA SYSTEM DESIGN & SAFETY NOTES

AMMONIA USED AT THE SVS BOILER PLANT TO OPERATE THE SELECTIVE CATALYTIC REDUCTION (SCR) UNITS IS CLASSIFIED AS A CLASS III TOXIC GAS AND AS A REGULATED MATERIAL BY THE SANTA CLARA COUNTY HAZMAT PROGRAM ORDINANCE CODE (ALSO KNOWN AS DIVISION B11 OF THE SANTA CLARA COUNTY ORDINANCE CODE).

OBTAIN SANTA CLARA COUNTY DEPARTMENT OF ENVIRONMENTAL HEALTH (HAZARDOUS MATERIALS COMPLIANCE DIVISION) AND GOVERNMENT CONSTRUCTION PERMITS, FURNISH AND INSTALL AN AMMONIA STORAGE SYSTEM THAT SUPPORTS OPERATION OF THE BOILERS AND COMPLIES WITH DIVISION B11, ALSO KNOWN AS TOXIC GAS ORDINANCE (TGO), BASED ON THE MAXIMUM AMMONIA CONSUMPTION RATE FOR THE BOILERS.

LOCATE AMMONIA STORAGE FACILITY A MINIMUM OF 75 FEET FROM NEAREST BUILDING STRUCTURE (N231) SUCH THAT FIRE BARRIER AND FIRE PROTECTION REQUIREMENTS IN SECTION B11-385 ARE NOT APPLICABLE.

SYSTEM STORAGE SHALL BE LESS THAN 500 LBS OF AMMONIA, WHICH IS THE THRESHOLD FOR APPLICABILITY OF CAL-ARP (CALIFORNIA ACCIDENTAL RELEASE PREVENTION) REQUIREMENTS.

SYSTEM STORAGE SHALL BE LESS THAN 10,000 LBS OF AMMONIA, WHICH IS THE THRESHOLD FOR APPLICABILITY OF THE 29 CFR 1910.119 OSHA PROCESS SAFETY MANAGEMENT REQUIREMENT.

BULK AMMONIA STORAGE: ANHYDROUS AMMONIA, ASME TANK PER SCHEDULE M601. PROVIDE DUAL RELIEF VALVES, FILL VALVE, GAS OUTLET VALVE, LIQUID OUTLET VALVE, PRESSURE GAUGE WITH SHUTOFF VALVE. PIPED VAPORIZER SHELL ASSEMBLY

VAPORIZER OPERATION: ENERGIZE HEATER WHEN VAPOR PRESSURE IS BELOW SET POINT (50 PSIG), AND DE-ENERGIZE HEATER WHEN VAPOR PRESSURE REACHES UPPER SET POINT (60 PSIG).

NH3 PIPING AND VALVES: SEE M603. 1/4-TURN VALVES ARE PROHIBITED. USE GROUND-JOINT UNIONS ONLY.

TOXIC GAS ORDINANCE (TGO): PROVIDE PROPER PLACARDS AND SIGNAGE. RESTRICT ENTRY TO AUTHORIZED PERSONNEL.

PERSONNEL PROTECTION EQUIPMENT: PROVIDE RESCUE LOCKER WITH REQUIRED EQUIPMENT.

EMERGENCY SHUTOFF: CLOSE EMERGENCY SHUTOFF VALVE AND SEND ALARM WHEN REMOTE PUSH BUTTON IS ACTIVATED MANUALLY.

MONITORING: VISUALLY INDICATE LOCAL WIND DIRECTION WITH WIND SOCK NEAR TANK. INDICATE PREVAILING WIND DIRECTION WITH ELEVATED WIND SOCK.

ALARMS: PROVIDE AUDIAL AND VISUAL ALARMS IN BOILER PLANT AND BOILER CONTROL ROOM UPON MANUAL ACTIVATION.

ZONE	LETTER	DESCRIPTION	DRAWN	DATE	APPRVD

REVISIONS

REGISTERED PROFESSIONAL ENGINEER MICHAEL S. CALLAHAN No. M21188 MECHANICAL STATE OF CALIFORNIA

DRAWN J.HO	DATE
DESIGNED M.CALLAHAN	DATE
CHECKED P.YALLOURIS	DATE
A&E PM G.HITE	DATE
NASA PM W.LEE	DATE
REQUESTER G.RAICHE	DATE
R&QA	DATE
SAFETY/PSM D.FRASER	DATE
SUPERVISOR S.FRANKEL	DATE

Ames Research Center
Moffett Field, California

REPLACE ARC JET COMPLEX SVS BOILER
MECHANICAL

MECHANICAL GENERAL NOTES

SIZE	CAGE CODE		REV
D	25307	A 231-1300-M002	
SCALE —		INDEX	SHEET OF

FILE NAME: 231-M002.DWG 12/12/12

DWG: R:\234AI\60212932.0001 (K11027) Replace Arc Jet Complex SVS Boiler Final Design\500 CAD\MSheet\231-M002_NOTES.dwg Version: 18.1s (LMS Tech) User: jlho
DATE: Feb 01, 2013 -

DWG NO.	SH.	REV
A231-1300-M101	1	

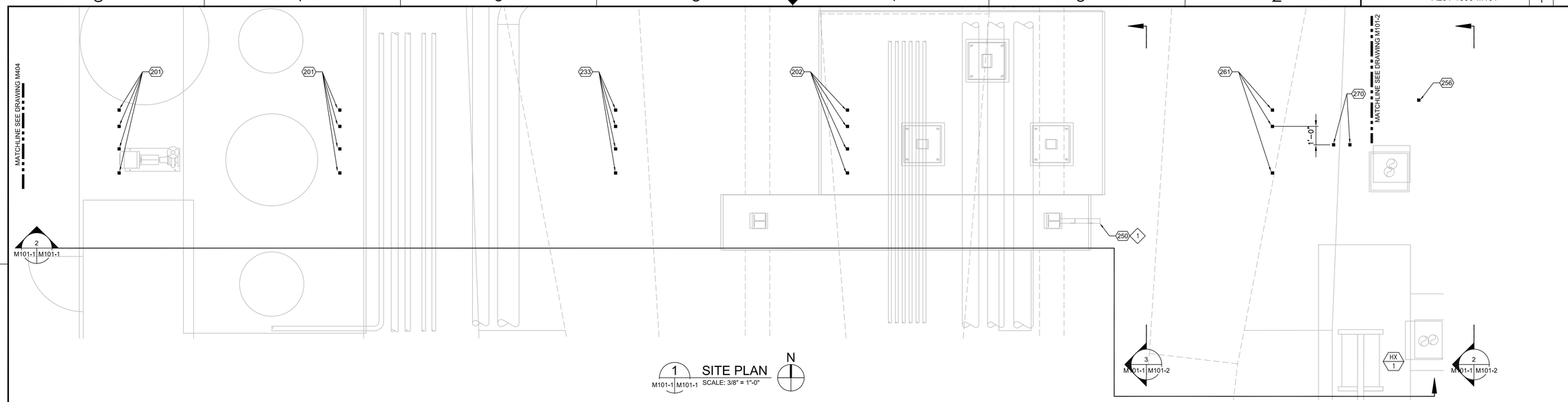

1 SITE PLAN
M101-1 M101-1 SCALE: 3/8" = 1"-0"

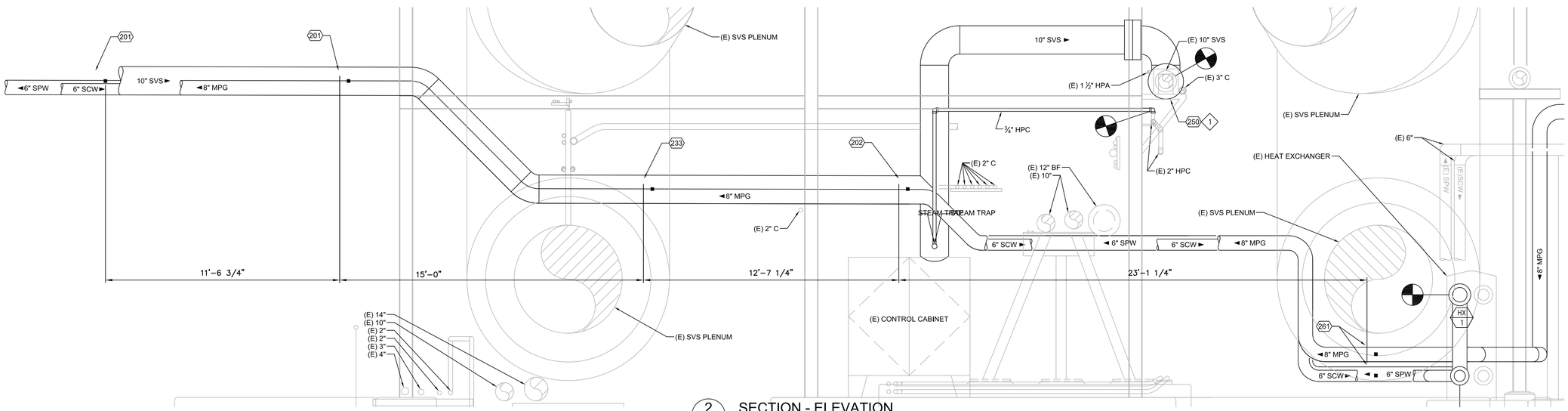

2 SECTION - ELEVATION
M101-1 M101-1 SCALE: 3/8" = 1"-0"

SHEET NOTES

1. SEE SHEET M601, M602 AND M603 FOR EQUIPMENT AND PIPE SCHEDULES.
2. SEE PIPE SUPPORT SCHEDULE ON DRAWING M603 FOR PIPE SUPPORT DETAIL.

KEY NOTES

1. DEMOLISH (E) PIPE SUPPORT SHOWN, AND REPLACE WITH NEW SUPPORT AS DETAILED.

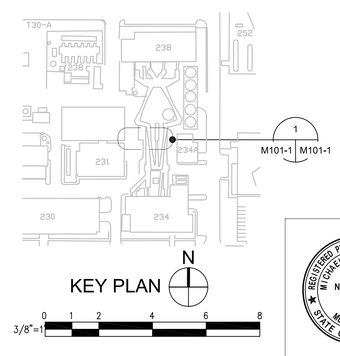

KEY PLAN

REGISTERED PROFESSIONAL ENGINEER
MICHAEL S. CALLAHAN
No. M21188
MECHANICAL
STATE OF CALIFORNIA

ZONE	LETTER	DESCRIPTION	DRAWN	DATE	APPRVD

REVISIONS

DRAWN J.HO	DATE
DESIGNED M.CALLAHAN	DATE
CHECKED P.YALLOURIS	DATE
A&E PM G.HITE	DATE
NASA PM W.LEE	DATE
REQUESTER G.RAICHE	DATE
R&QA	DATE
SAFETY/PSM D.FRASER	DATE
SUPERVISOR S.FRANKEL	DATE

Ames Research Center
Moffett Field, California

REPLACE ARC JET COMPLEX SVS BOILER
MECHANICAL

SVS STEAM, GAS AND SOFT WATER SITE PLAN AND ELEVATION (SHEET 1 OF 2)

SIZE	CAGE CODE		REV
D	25307	A 231-1300-M101	
SCALE —		INDEX	SHEET 1 OF 2

FILE NAME: 231-M101-1.DWG 12/12/12

DWG: R:\234\A60212\932-0001 (KX11027) Replace Arc Jet Complex SVS Boiler Final Design\500 CAD\MSheet\231-M101-1_SITE PLAN.dwg Version: 18.1s (LMS Tech) User: jlho
DATE: Feb 01, 2013 - 12:47:43 pm

DWG NO.	SH.	REV
A231-1300-M101	2	

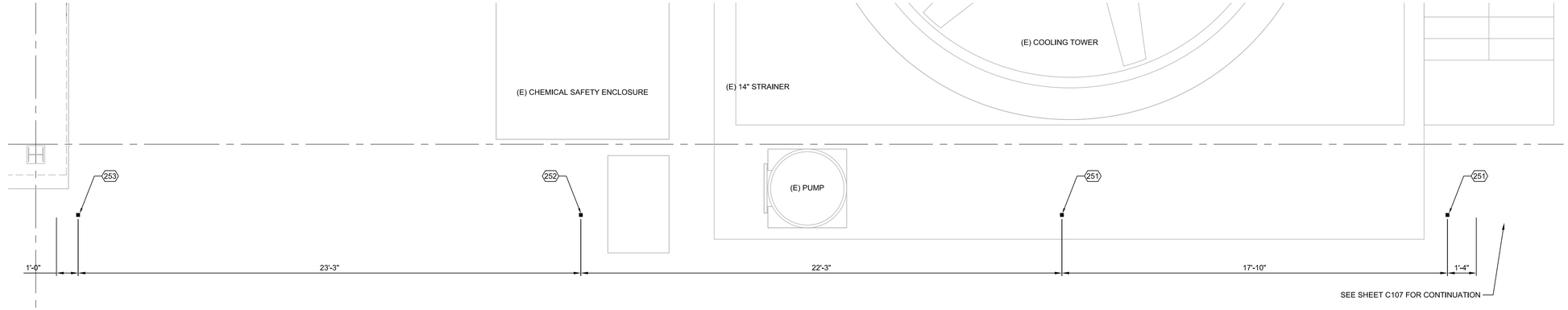

1 SITE PLAN
M101-2 M101-2 SCALE: 3/8" = 1"-0"

N

MATCHLINE SEE DRAWING M101-1

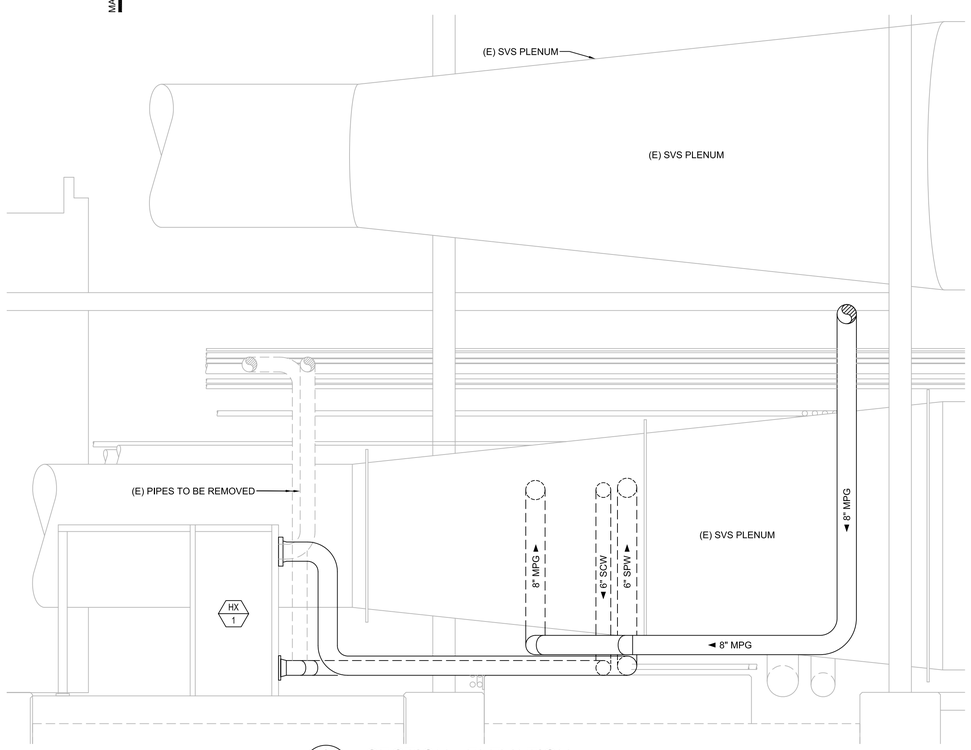

2 SECTION - ELEVATION
M101-1 M101-2 SCALE: 3/8" = 1"-0"

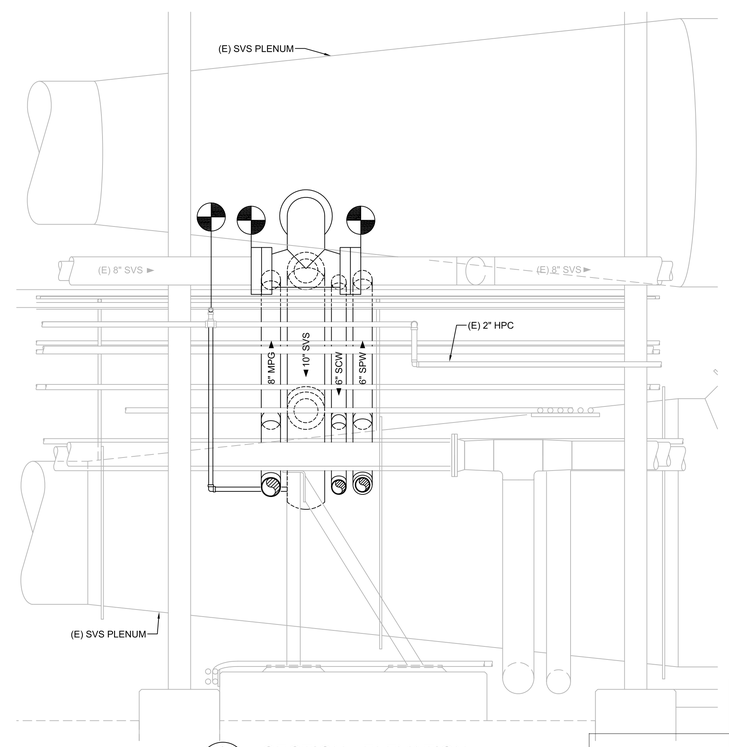

3 SECTION - ELEVATION
M101-1 M101-2 SCALE: 3/8" = 1"-0"

3/8"=1' 0 1 2 4 6 8

SHEET NOTES

1. SEE SHEET M601, M602 AND M603 FOR EQUIPMENT AND PIPE SCHEDULES.
2. SEE PIPE SUPPORT SCHEDULE ON DRAWING M603 FOR PIPE SUPPORT DETAIL.
3. COORDINATE WITH CIVIL DWGS. FOR FURTHER MPG PIPE REQUIREMENTS.

KEY NOTES

1. NOT USED.

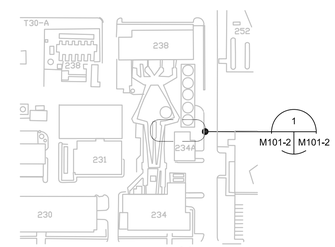

KEY PLAN

N

ZONE	LETTER	DESCRIPTION	DRAWN	DATE	APPRVD

REVISIONS

DRAWN J.HO	DATE
DESIGNED M.CALLAHAN	DATE
CHECKED P.YALLOURIS	DATE
A&E PM G.HITE	DATE
NASA PM W.LEE	DATE
REQUESTER G.RAICHE	DATE
R&QA	DATE
SAFETY/PSM D.FRASER	DATE
SUPERVISOR S.FRANKEL	DATE

REGISTERED PROFESSIONAL ENGINEER MICHAEL S. CALLAHAN No. M21188 MECHANICAL STATE OF CALIFORNIA

Ames Research Center
Moffett Field, California

REPLACE ARC JET COMPLEX SVS BOILER
MECHANICAL

SVS STEAM, GAS AND SOFT WATER SITE PLAN AND ELEVATION (SHEET 2 OF 2)

SIZE	CAGE CODE		REV
D	25307	231-1300-M101	
SCALE —		INDEX	SHEET 2 OF 2

FILE NAME: 231-M101-2.DWG 12/12/12

DWG: R:\234\60212932.0001 (K11027) Replace Arc Jet Complex SVS Boiler Final Design\500 CAD\MSheet\231-M101-2_SITE PLAN.dwg Version: 18.1s (LMS Tech) User: jjho
DATE: Feb 01, 2013 - 12:47:53 pm

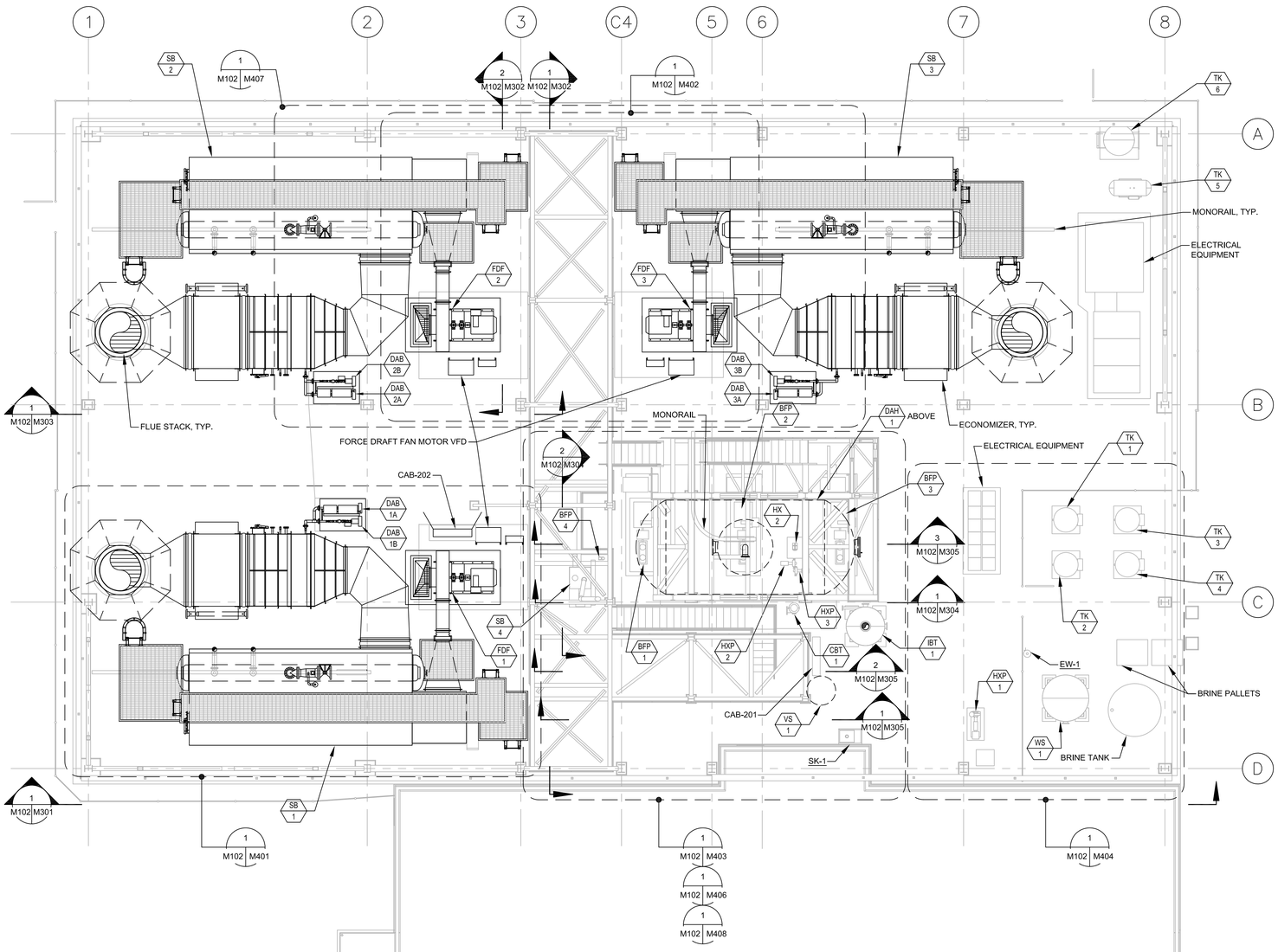

1 M102 M102 OVERALL PLAN SCALE: 1/8" = 1'-0"

N

1/8"=1' 0 4 8 16 24

SHEET NOTES

1. SEE SHEET M601, M602 AND M603 FOR EQUIPMENT AND PIPE SCHEDULES.

KEY NOTES

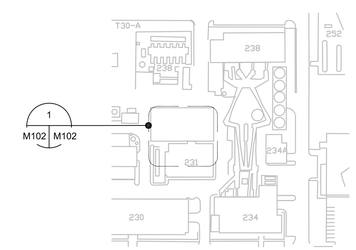

KEY PLAN

N

ZONE	LETTER	DESCRIPTION	DRAWN	DATE	APPRVD

REVISIONS

DRAWN J.HO	DATE
DESIGNED M.CALLAHAN	DATE
CHECKED P.YALLOURIS	DATE
A&E PM G.HITE	DATE
NASA PM W.LEE	DATE
REQUESTER G.RAICHE	DATE
R&QA	DATE
SAFETY/PSM D.FRASER	DATE
SUPERVISOR S.FRANKEL	DATE

REGISTERED PROFESSIONAL ENGINEER MICHAEL S. CALLAHAN No. M21188 MECHANICAL STATE OF CALIFORNIA

Ames Research Center
Moffett Field, California

REPLACE ARC JET COMPLEX SVS BOILER
MECHANICAL

OVERALL PLAN

SIZE	CAGE CODE	DWG NO.	REV
D	25307	A 231-1300-M102	
SCALE		INDEX	SHEET OF

FILE NAME: 231-M102.DWG 12/12/12

DWG: R:\234A\60212932\0001 (K11027) Replace ArcJect Complex SVS Boiler Final Design\500 CAD\501 BIM_ Plant3D\Orthos\M102 - OVERALL PLAN.dwg Version: 18.1s (LMS Tech) User: jjho
DATE: Feb 01, 2013 - 12:47:58 pm

DWG NO.	SH.	REV
A231-1300-M103		

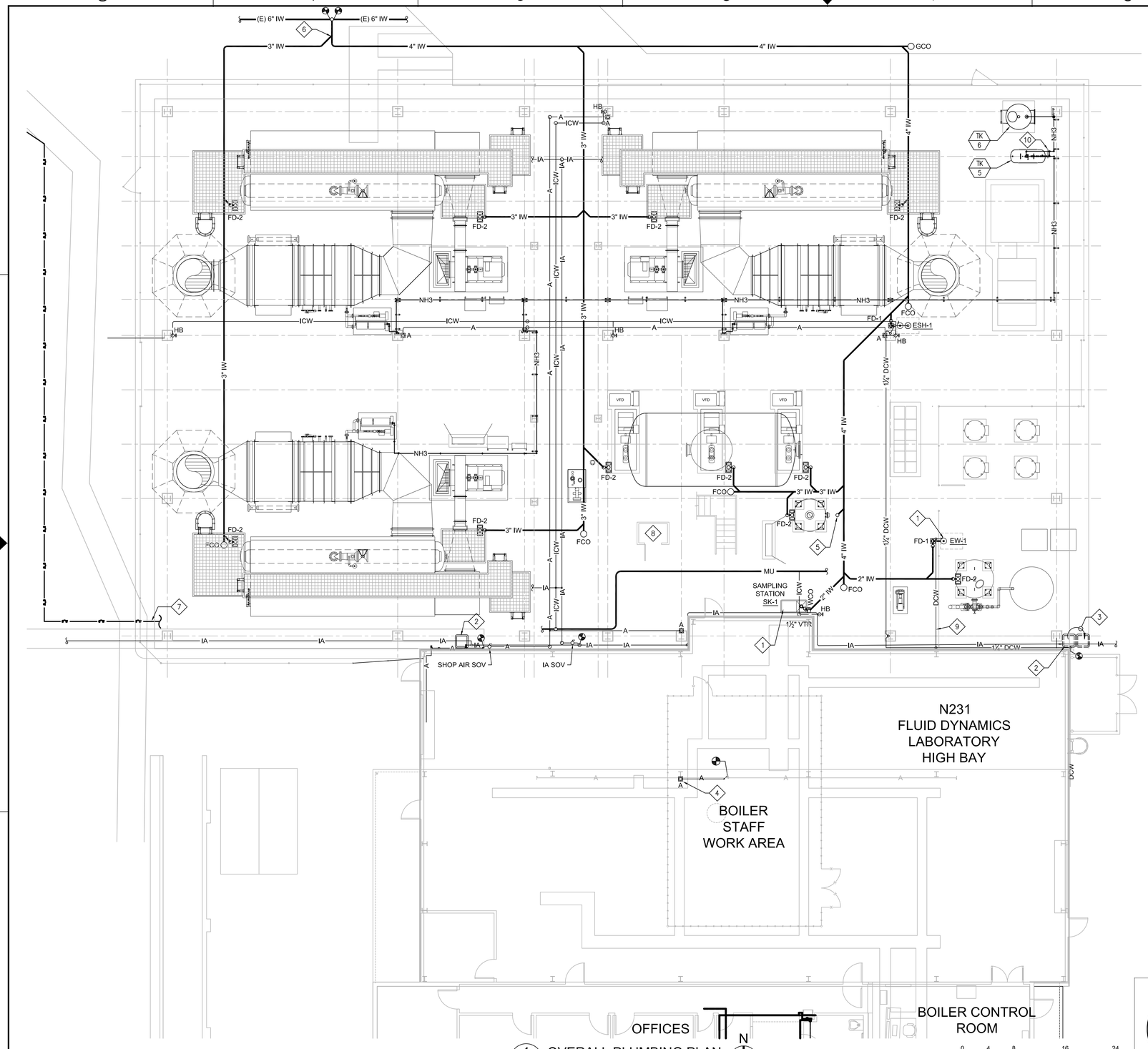

1 OVERALL PLUMBING PLAN
M103 M103 SCALE: 1/8" = 1"-0"

SHEET NOTES

1. SEE SHEET M601, M602 AND M603 FOR EQUIPMENT AND PIPE SCHEDULES.
2. HORIZONTAL INDUSTRIAL WASTE PIPE BELOW CONCRETE FOUNDATION SLAB SHALL BE EXTRA HEAVEY WEIGHT WITH MINIMUM BURIAL DEPTH OF 2'-0" BELOW BOTTOM OF CONCRETE SLAB AND SLOPE OF ¼" PER FOOT, UNLESS OTHERWISE NOTED.

KEY NOTES

1. PROVIDE 1/2" MAKE-UP WATER CONNECTION.
2. (E) ACCESS BOX WITH (E) CONDENSATE DRAIN VALVE FOR (E) UNDERGROUND IA PIPE.
3. RELOCATE (E) ACCESS BOX BEYOND NEW MAT FOUNDATION SLAB, AND EXTEND ½" DRAIN LINE AND VALVE TO NEW LOCATION.
4. BID OPTION 4: INSTALL NEW COMPRESSED SHOP AIR STATION ON (E) COLUMN.
5. CONNECT 4" WASTE FROM IBT-1 TO INDUSTRIAL WASTE PIPE.
6. SEE C106 FOR CONTINUATION OF 4" IW.
7. SEE M401 AND C106 FOR CONTINUATION OF 6" W.
8. AMMONIA GAS EMERGENCY RESCUE LOCKER WITH RESCUE EQUIPMENT AND PERSONNEL PROTECTIVE EQUIPMENT NEEDED FOR AMMONIA INSTALLATION.
9. MOUNT DCW ON FLOOR NEXT TO FENCE.
10. CONSTRUCT STRUT FRAMING FOR SUPPORT AND BRACING OF PIPING AND VALVES AT NH3 STORAGE TANK.

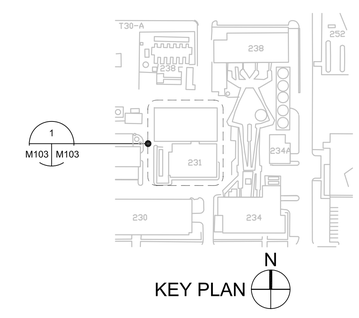

KEY PLAN

ZONE	LETTER	DESCRIPTION	DRAWN	DATE	APPRVD

REVISIONS

DRAWN J.HO	DATE
DESIGNED M.CALLAHAN	DATE
CHECKED P.YALLOURIS	DATE
A&E PM G.HITE	DATE
NASA PM W.LEE	DATE
REQUESTER G.RAICHE	DATE
R&QA	DATE
SAFETY/PSM	DATE
SUPERVISOR S.FRANKEL	DATE

REGISTERED PROFESSIONAL ENGINEER MICHAEL S. CALLAHAN No. M21188 MECHANICAL STATE OF CALIFORNIA

Ames Research Center
Moffett Field, California

REPLACE ARC JET COMPLEX SVS BOILER
MECHANICAL

OVERALL PLUMBING PLAN

SIZE	CAGE CODE		REV
D	25307	231-1300-M103	
SCALE —		INDEX	SHEET OF

FILE NAME: 231-M103.DWG 12/12/12

DWG: R:\234A\60212932.0001 (K11027) Replace Arcjet Complex SVS Boiler Final Design\500 CAD\MSheet\231-M103_OVERALL PLUMBING PLAN.dwg Version: 18.1s (LMS Tech) User: jjho
DATE: Feb 01, 2013 - 12:48:09 pm

DWG NO.	SH.	REV
A231-1300-M201		

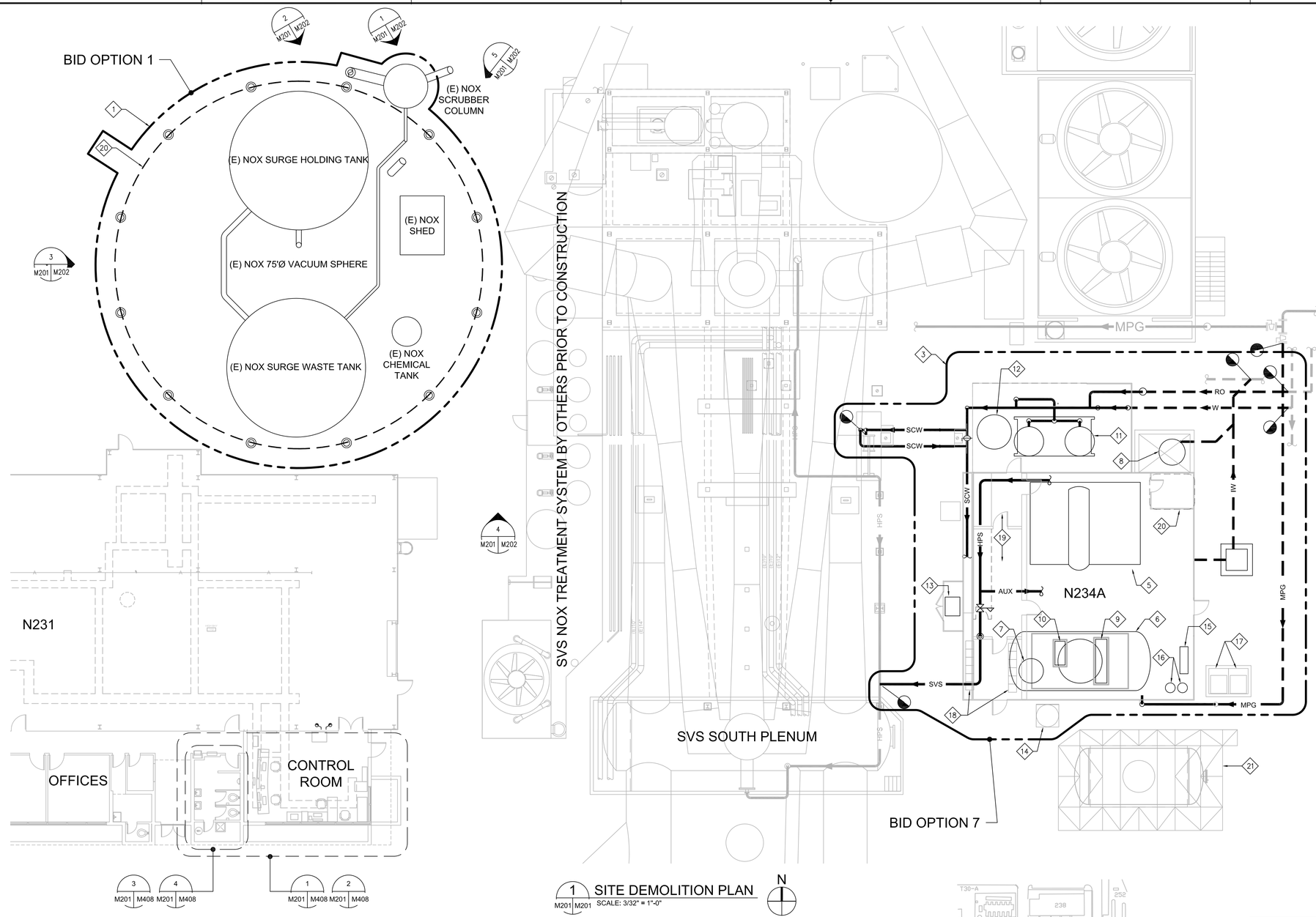

1 SITE DEMOLITION PLAN
M201 M201
SCALE: 3/32" = 1"-0"

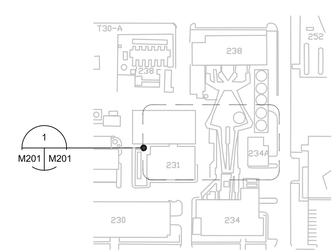

KEY PLAN

SHEET NOTES

1. SEE SHEET M002 FOR GENERAL NOTES.
2. SEE SHEET G006 FOR GENERAL DESCRIPTION OF EACH BID OPTION.

KEY NOTES

1. BID OPTION 1: DEMOLITION OF (E) ABANDONED NOX SYSTEM. BID OPTION INCLUDES DEMOLITION OF ALL EQUIPMENT ABOVE GROUND SHOWN WITHIN THIS BOUNDARY. DEMOLISH (E) SCRUBBER SPHERE AND STRUCTURAL SUPPORTS, NOX SCRUBBER TOWER, NOX SCRUBBER SURGE HOLDING TANK, NOX SCRUBBER SURGE WASTE TANK, STORAGE SHED, CHEMICAL TANK AND ASSOCIATED PIPING. DEMOLITION SCOPE INCLUDES ALL PIPING, SUPPORT, FOUNDATIONS, AND OTHER ITEMS ABOVE GROUND. SEE KEY NOTES FOR IDENTIFICATION OF MAJOR COMPONENTS. NOT ALL COMPONENTS AND PIPING IS SHOWN ON THIS PLAN.
2. NOT USED.
3. BID OPTION 7: (E) BOILER PLANT DEMOLITION. BID OPTION INCLUDES ALL WORK SHOWN WITHIN THIS BOUNDARY. DEMOLISH (E) MECHANICAL EQUIPMENT, UNLESS SPECIFICALLY INDENTIFIED TO REMAIN. EQUIPMENT DEMOLITION SCOPE INCLUDES ALL CONNECTING PIPING, PUMPS, CONTROLS, INSTRUMENTS AND ELECTRICAL POWER WHICH ARE NOT REQUIRED FOR OTHER EQUIPMENT WHICH IS IDENTIFIED TO REMAIN. SEE KEY NOTES FOR IDENTIFICATION OF MAJOR EQUIPMENT. NOT ALL EQUIPMENT AND PIPING IS SHOWN ON THIS PLAN.
4. NOT USED.
5. REMOVE (E) HIGH PRESSURE STEAM BOILER.
6. REMOVE (E) DEAERATOR HEATER AND FEEDWATER TANK.
7. REMOVE (E) CONTINUOUS BLOWDOWN FLASH TANK.
8. REMOVE (E) INTERMITTENT BLOWDOWN TANK.
9. REMOVE (E) ELECTRIC FEEDWATER PUMP.
10. REMOVE (E) STEAM FEEDWATER PUMP.
11. REMOVE (E) WATER SOFTENER PLANT.
12. REMOVE (E) BRINE TANK.
13. REMOVE (E) AUXILIARY BOILER AND ASSOCIATED (E) PUMPS AND PIPING.
14. REMOVE (E) RELIEF VALVE MUFFLER, AND SUPPORT STRUCTURE.
15. REMOVE (E) CHEMICAL FEED PUMPS.
16. REMOVE (E) CHEMICAL MIXING TANKS.
17. REMOVE (E) CHEMICAL STORAGE TANKS.
18. (E) MCC TO REMAIN. SEE ELECTRICAL DWGS.
19. (E) SVS CONTROL ROOM TO REMAIN INCLUDING ALL SUPPORT SYSTEMS.
20. (E) TOILET ROOM TO REMAIN INLCUDING PLUMBING FIXTURES AND ASSOCIATED PIPING.
21. (E) DEAERATOR/FEEDWATER TANK AND SUPPORTING STRUCTURE.

ZONE	LETTER	DESCRIPTION	DRAWN	DATE	APPRVD

REVISIONS

DRAWN J.HO	DATE	
DESIGNED M.CALLAHAN	DATE	
CHECKED P.YALLOURIS	DATE	
A&E PM G.HITE	DATE	
NASA PM W.LEE	DATE	
REQUESTER G.RAICHE	DATE	
R&QA	DATE	
SAFETY/PSM D.FRASER	DATE	
SUPERVISOR S.FRANKEL	DATE	

Ames Research Center
Moffett Field, California

REPLACE ARC JET COMPLEX SVS BOILER
MECHANICAL

SITE DEMOLITION PLAN

SIZE	CAGE CODE		REV
D	25307	A 231-1300-M201	
SCALE 3/32" = 1"-0"		INDEX	SHEET OF

FILE NAME: 231-M201.DWG 12/12/12

REGISTERED PROFESSIONAL ENGINEER GREGORY JAMES HITE No. C70284 CIVIL STATE OF CALIFORNIA

3/32"=1' 0 8 16 32 48

DWG: R:\234A\60212932.0001 (K11027) Replace Arc Jet Complex SVS Boiler Final Design\500 CAD\M\Sheet\231-M201_SITE DEMO.dwg Version: 18.1s (LMS Tech) User: jjho
DATE: Feb 01, 2013 - 12:48:19 pm

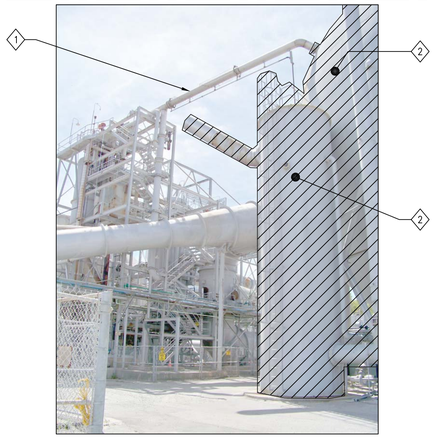

1 DEMOLITION PHOTO 1
M201 M202 SCALE: NTS

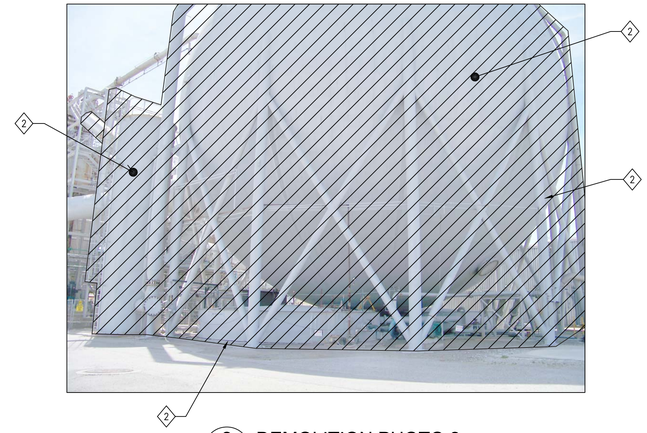

2 DEMOLITION PHOTO 2
M201 M202 SCALE: NTS

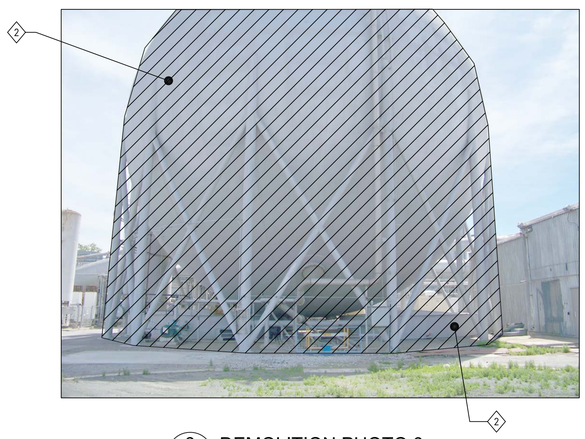

3 DEMOLITION PHOTO 3
M201 M202 SCALE: NTS

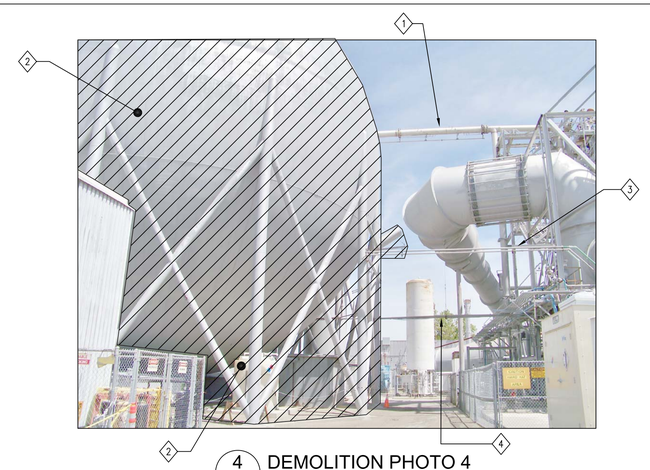

4 DEMOLITION PHOTO 4
M201 M202 SCALE: NTS

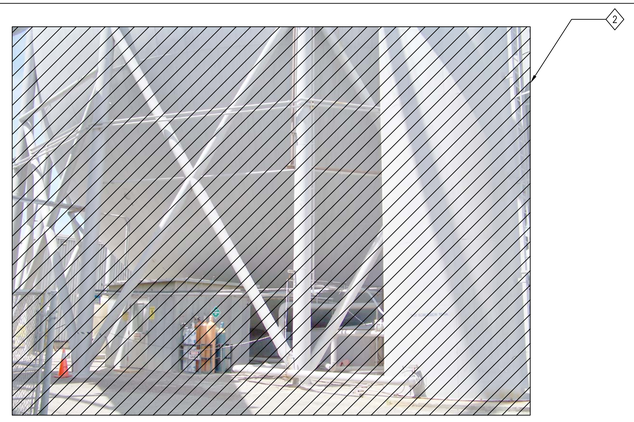

5 DEMOLITION PHOTO 5
M201 M202 SCALE: NTS

SHEET NOTES

1. SEE SHEET G006 FOR GENERAL DESCRIPTION OF EACH BID OPTION.
2. REMOVE ALL STRUCTURAL STEEL TO FOUNDATION. REMOVE ALL PROJECTIONS FLUSH WITH TOP OF FOUNDATION.
3. (E) COATING FOR SPHERES AND TANKS CONTAIN LEAD. USE PROPER SAFETY PROCEDURES FOR LEAD ABATEMENT AND REMOVAL DURING DEMOLITION.

KEY NOTES

1. PIPE OVER ROADWAY: (E) 18" STAINLESS STEEL PIPE AND AMMONIA SPRAY PIPING (FIRST STAGE OF ABANDONED NOX SYSTEM) TO BE REMOVED BY OTHERS PRIOR TO CONSTRUCTION.
2. REMOVE (E) NOX SCRUBBER SYSTEM. DEMOLISH FLUSH TO GRADE. SEE M201.
3. PIPES OVER ROADWAY: TWO (E) 2" INSTRUMENT (COMPRESSED) AIR PIPES OVER ROADWAY TO BE REMOVED BY OTHERS PRIOR TO CONSTRUCTION.
4. PIPES OVER ROADWAY: (E) 2" GALVANIZED WATER SUPPLY PIPES, (E) ABANDONED 2" GALVANIZED WATER PIPE, (E) NaOH TUBING WITH SECONDARY CONTAINMENT WITH, AND (E) WIRE ROPE TRAPEZE HANGER TO BE REMOVED BY OTHERS PRIOR TO CONSTRUCTION.

BID OPTION 1

REGISTERED PROFESSIONAL ENGINEER GREGORY JAMES HITE No. C70284 CIVIL STATE OF CALIFORNIA

ZONE	LETTER	DESCRIPTION	DRAWN	DATE	APPRVD

REVISIONS

DRAWN J.HO	DATE
DESIGNED M.CALLAHAN	DATE
CHECKED P.YALLOURIS	DATE
A&E PM G.HITE	DATE
NASA PM W.LEE	DATE
REQUESTER G.RAICHE	DATE
R&QA	DATE
SAFETY/PSM D.FRASER	DATE
SUPERVISOR S.FRANKEL	DATE

Ames Research Center
Moffett Field, California

REPLACE ARC JET COMPLEX SVS BOILER
MECHANICAL

DEMOLITION PHOTOS

SIZE	CAGE CODE	
D	25307	A 231-1300-M202 REV
SCALE NONE	INDEX	SHEET OF

FILE NAME: 231-M202.DWG 12/12/12

DWG: R:\234\60212932.0001 (K11027) Replace ArcJect Complex SVS Boiler Final Design\500 CAD\MSheet\231-M202_ DEMOLITION PHOTOS.dwg Version: 18.1s (LMS Tech) User: jlho
DATE: Feb 01, 2013 - 12:48:25 pm

DWG NO.	SH.	REV
A231-1300-M301		

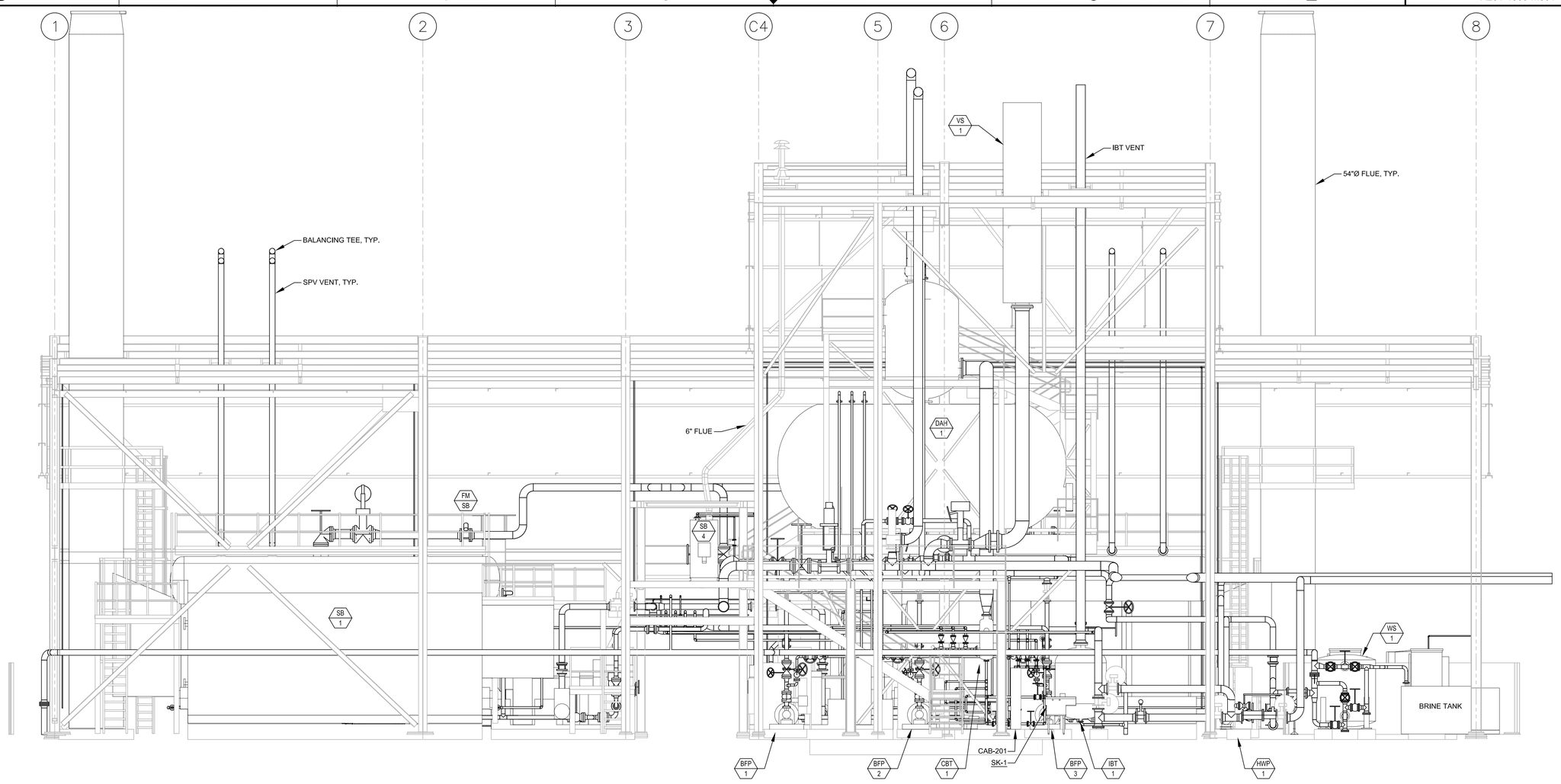

1 SECTION: OVERALL EAST-WEST
M102 M301 SCALE: 3/16" = 1'-0"

SHEET NOTES

1. SEE SHEET M601, M602 AND M603 FOR EQUIPMENT AND PIPE SCHEDULES.
2. PIPE INSULATION IS NOT SHOWN FOR CLARITY. SEE SCHEDULE ON SHEET M603 FOR PIPE INSULATION PER PIPING SYSTEM.
3. SEE PIPE SUPPORT SCHEDULE ON DRAWING M603 FOR PIPE SUPPORT DETAIL.

KEY NOTES

3/16"=1' 0 4 8 16

REGISTERED PROFESSIONAL ENGINEER MICHAEL S. CALLAHAN No. M21188 MECHANICAL STATE OF CALIFORNIA

ZONE	LETTER	DESCRIPTION	DRAWN	DATE	APPRVD

REVISIONS

DRAWN J.HO	DATE
DESIGNED M.CALLAHAN	DATE
CHECKED P.YALLOURIS	DATE
A&E PM G.HITE	DATE
NASA PM W.LEE	DATE
REQUESTER G.RAICHE	DATE
R&QA	DATE
SAFETY/PSM D.FRASER	DATE
SUPERVISOR S.FRANKEL	DATE

Ames Research Center
Moffett Field, California

REPLACE ARC JET COMPLEX SVS BOILER
MECHANICAL

SECTION - OVERALL EAST-WEST

SIZE	CAGE CODE		REV
D	25307	A 231-1300-M301	
SCALE		INDEX	SHEET OF

FILE NAME: 231-M301.DWG 12/12/12

DWG: R:\234A\60212932.0001 (K11027) Replace Arc-Jet Complex SVS Boiler Final Design\500 CAD\501 BIM_Plant3D\Ortho\M301 - SECTION EAST-WEST.dwg Version: 18.1s (LMS Tech) User: jjho
DATE: Feb 01, 2013 - 12:48:35 pm

DWG NO.	SH.	REV
A331-1102-M302		

SHEET NOTES

1. SEE SHEET M601, M602 AND M603 FOR EQUIPMENT AND PIPE SCHEDULES.
2. PIPE INSULATION ARE NOT SHOWN. SEE SCHEDULE ON SHEET M603 FOR PIPE INSULATION PER SYSTEM.
3. SEE PIPE SUPPORT SCHEDULE ON DRAWING M603 FOR PIPE SUPPORT DETAIL.

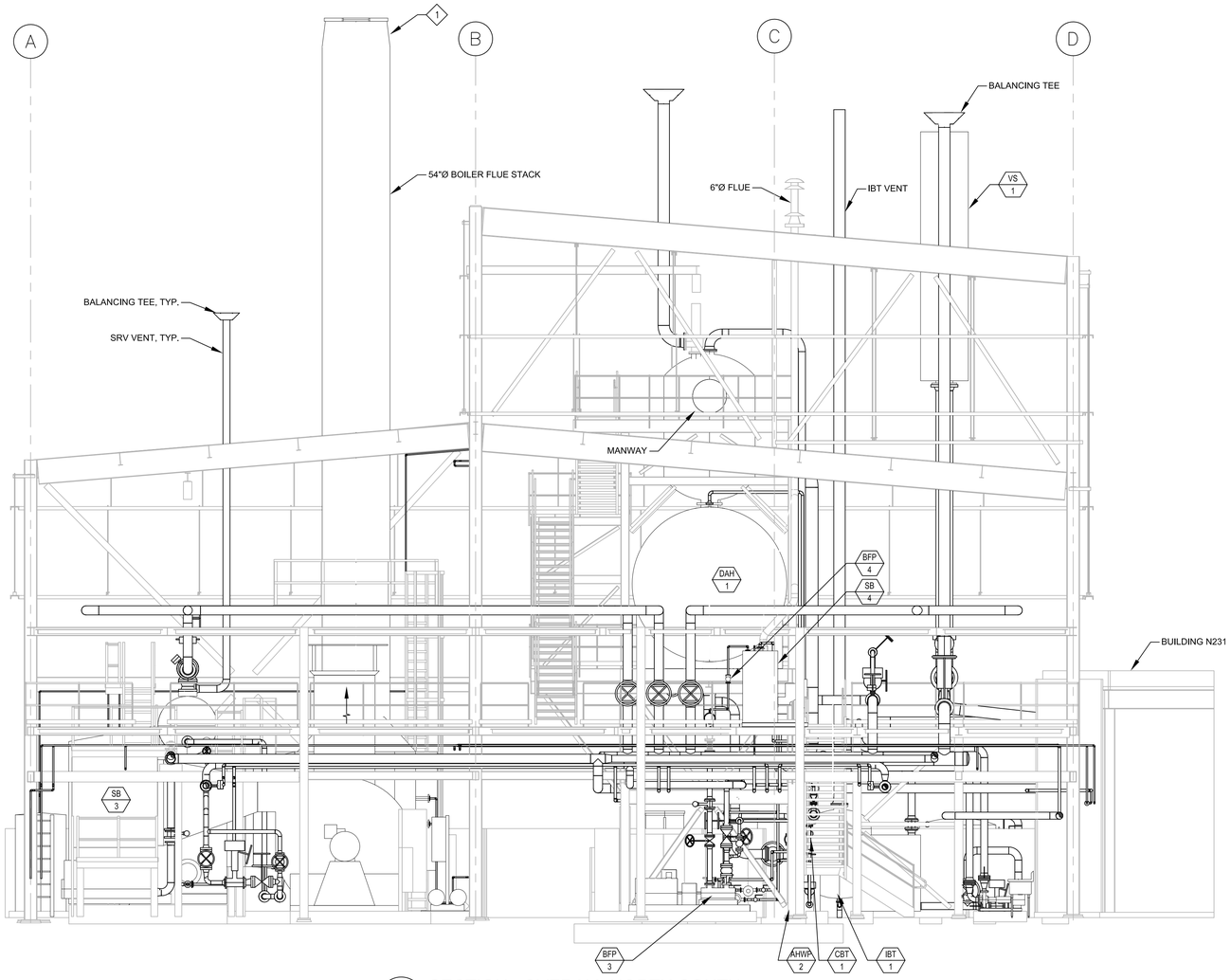

1 SECTION: OVERALL NORTH-SOUTH
M102 M302 SCALE: 3/16" = 1"-0"

KEY NOTES

1. STACK TERMINATION: TERMINATE 70' ABOVE REFERENCE GRADE WITH TAPERED CONE TO 48" DIAMETER AND FLAP LID. PROVIDE AUTOMATIC DRIVE FOR LID OPERATION.

3/16"=1' 0 4 8 16

REGISTERED PROFESSIONAL ENGINEER MICHAEL S. CALLAHAN No. M21188 MECHANICAL STATE OF CALIFORNIA

ZONE	LETTER	DESCRIPTION	DRAWN	DATE	APPRVD

REVISIONS

DRAWN J.HO	DATE
DESIGNED M.CALLAHAN	DATE
CHECKED P.YALLOURIS	DATE
A&E PM G.HITE	DATE
NASA PM W.LEE	DATE
REQUESTER G.RAICHE	DATE
R&QA	DATE
SAFETY/PSM D.FRASER	DATE
SUPERVISOR S.FRANKEL	DATE

Ames Research Center
Moffett Field, California

REPLACE ARC JET COMPLEX SVS BOILER
MECHANICAL

SECTION - OVERALL NORTH-SOUTH

SIZE	CAGE CODE		REV
D	25307	A 331-1102-M302	
SCALE		INDEX	SHEET OF

FILE NAME: 231-M302.DWG 12/12/12

DWG: R:\234A\80231202.0001 (K11027) Replace ArcJect Complex SVS Boiler Final Design\500 CAD\501 BIM_ Plant3D\Ortho\M302 - SECTION NORTH-SOUTH.dwg Version: 18.1s (LMS Tech) User: jjho
DATE: Feb 01, 2013 - 12:48:40 pm

DWG NO.	SH.	REV
A231-1300-M303		

SHEET NOTES

1. SEE SHEET M601, M602 AND M603 FOR EQUIPMENT AND PIPE SCHEDULES.
2. PIPE INSULATION ARE NOT SHOWN. SEE SCHEDULE ON SHEET M603 FOR PIPE INSULATION PER SYSTEM.
3. SEE PIPE SUPPORT SCHEDULE ON DRAWING M603 FOR PIPE SUPPORT DETAIL.

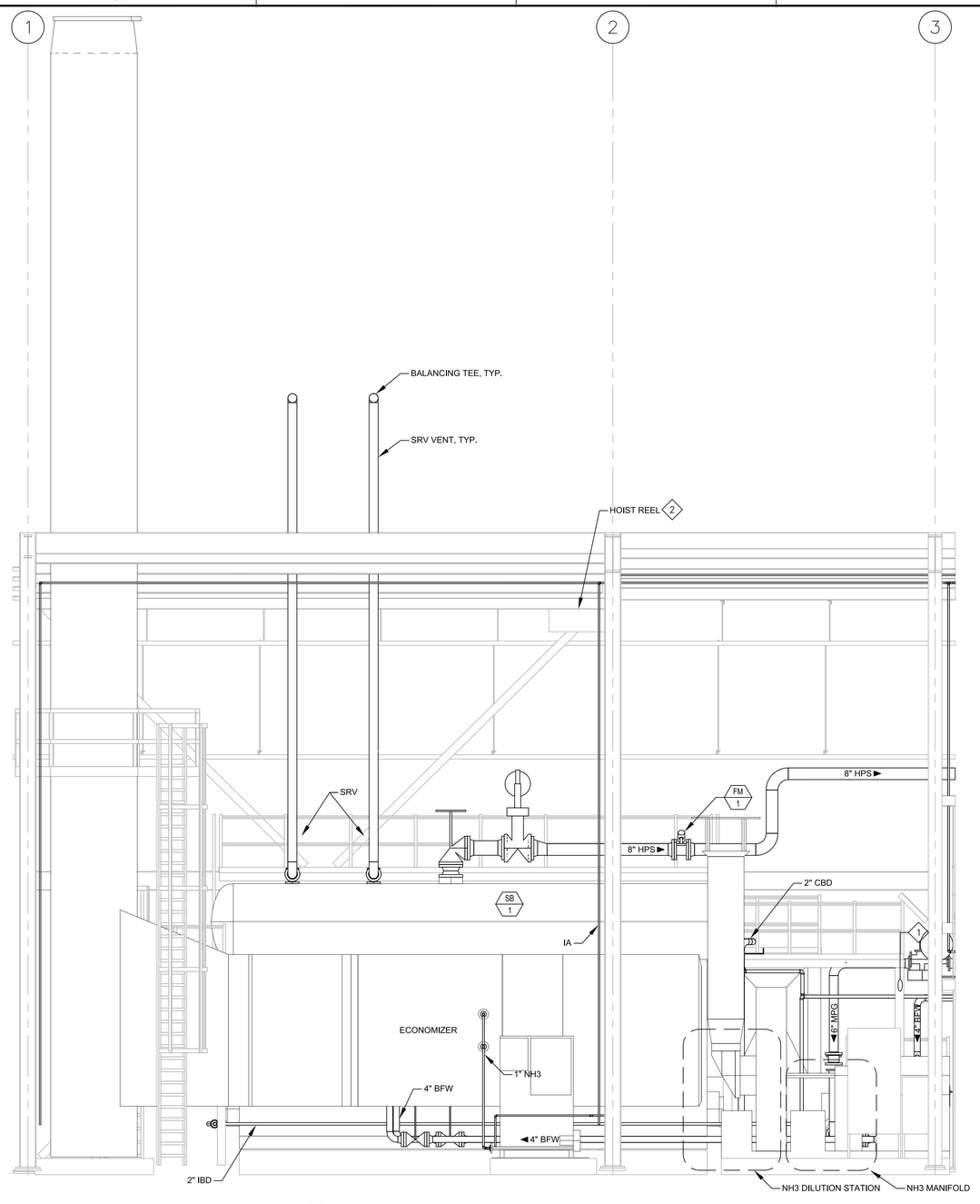

1 SECTION - TYPICAL BOILER - BREACHING SIDE
M102 M303 SCALE: 1/4" = 1"-0"

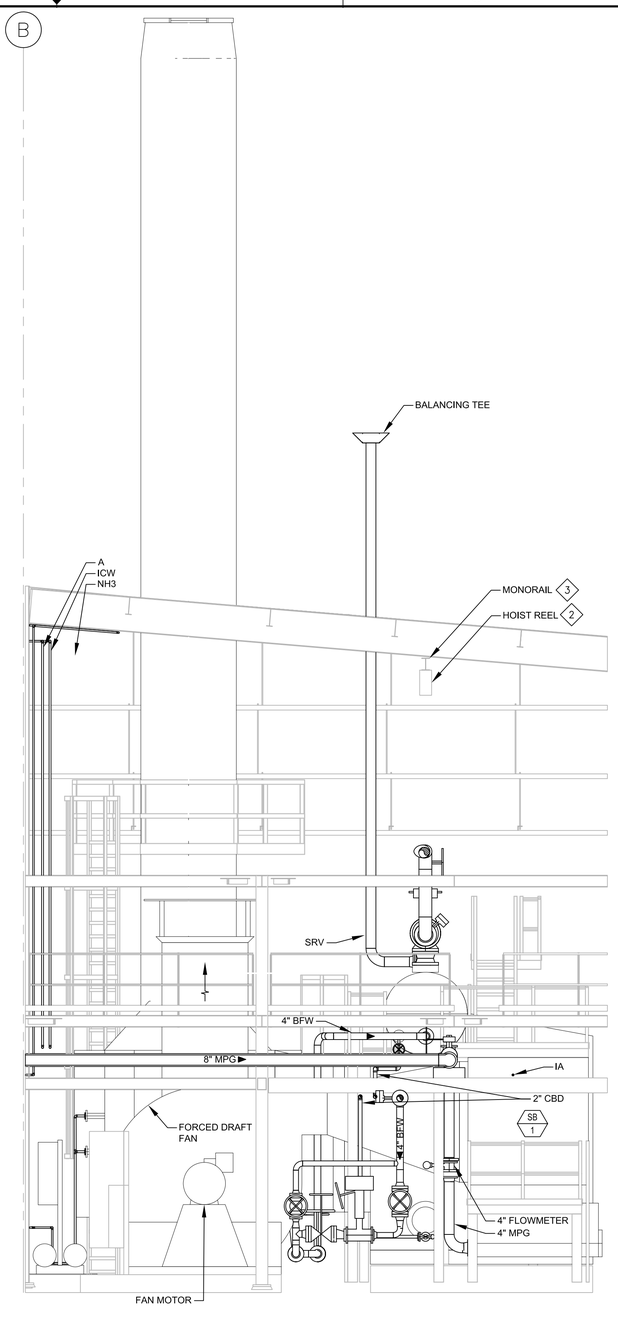

2 SECTION - TYPICAL BOILER - BURNER SIDE
M102 M303 SCALE: 1/4" = 1"-0"

KEY NOTES

1. 4" BFW, 3" AHWR, 1" IA, 4" MPG, 2" CBD, 2" IBD.
2. MONORAIL: ONE-TON CAPACITY. MONORAIL MUST BE ABLE TO LIFT ITEMS TO BOILER'S STEAM DRUM, BOILER ACCESS PLATFORM LEVELS AND GROUND. MONORAIL MINIMUM REACH: 36" BEYOND EDGE OF PLATFORM RAILING.
3. HOIST REEL: ONE-TON CAPACITY MANUAL HOIST WITH 35' LIFT. HOIST: H3 RATED, DISC MOTOR BRAKE, OVERLOAD LIMITING CLUTCH. TROLLEY: MANUAL.

ZONE	LETTER	DESCRIPTION	DRAWN	DATE	APPRVD

REVISIONS

DRAWN J.HO	DATE
DESIGNED M.CALLAHAN	DATE
CHECKED P.YALLOURIS	DATE
A&E PM G.HITE	DATE
NASA PM W.LEE	DATE
REQUESTER G.RAICHE	DATE
R&QA	DATE
SAFETY/PSM D.FRASER	DATE
SUPERVISOR S.FRANKEL	DATE

REGISTERED PROFESSIONAL ENGINEER MICHAEL S. CALLAHAN No. M21188 MECHANICAL STATE OF CALIFORNIA

1/4"=1' 0 2 4 8 12

Ames Research Center
Moffett Field, California

REPLACE ARC JET COMPLEX SVS BOILER
MECHANICAL

SECTIONS - TYPICAL BOILER

SIZE	CAGE CODE		REV
D	25307	A 231-1300-M303	
SCALE		INDEX	SHEET OF

FILE NAME: 231-M303.DWG 12/12/12

DWG: R:\234\NI\0212332.0001 (K11027) Replace Arcjet Complex SVS Boiler Final Design\500 CAD\501 BIM_Plant3D\Ortho\M303 - SECTIONS - BOILER.dwg Version: 18.1s (LMS Tech) User: jjho
DATE: Feb 01, 2013 - 12:48:44 pm

DWG NO.	SH.	REV
A231-1300-M304		

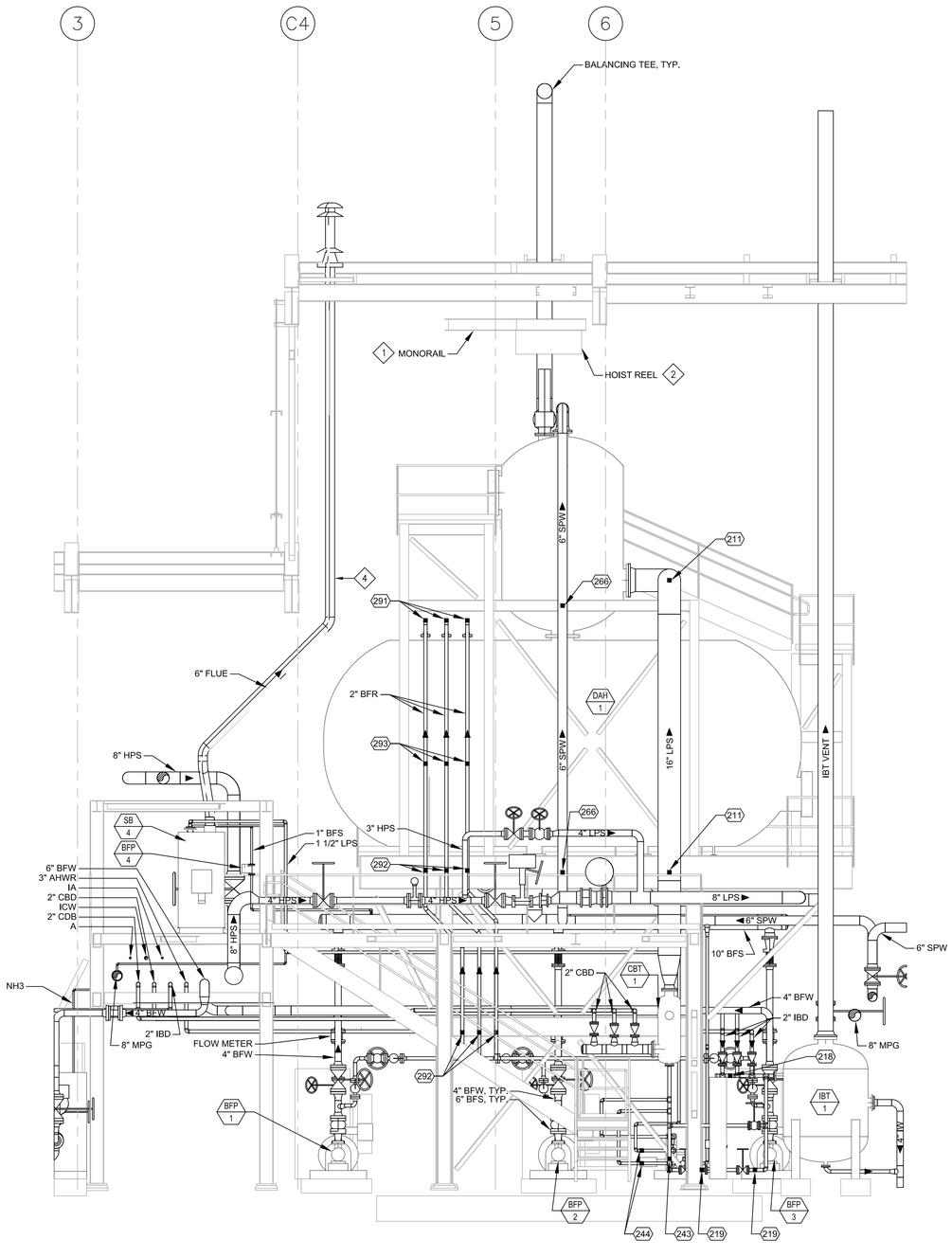

1 SECTION - DEAERATOR
M102 M304 SCALE: 1/4" = 1"-0"

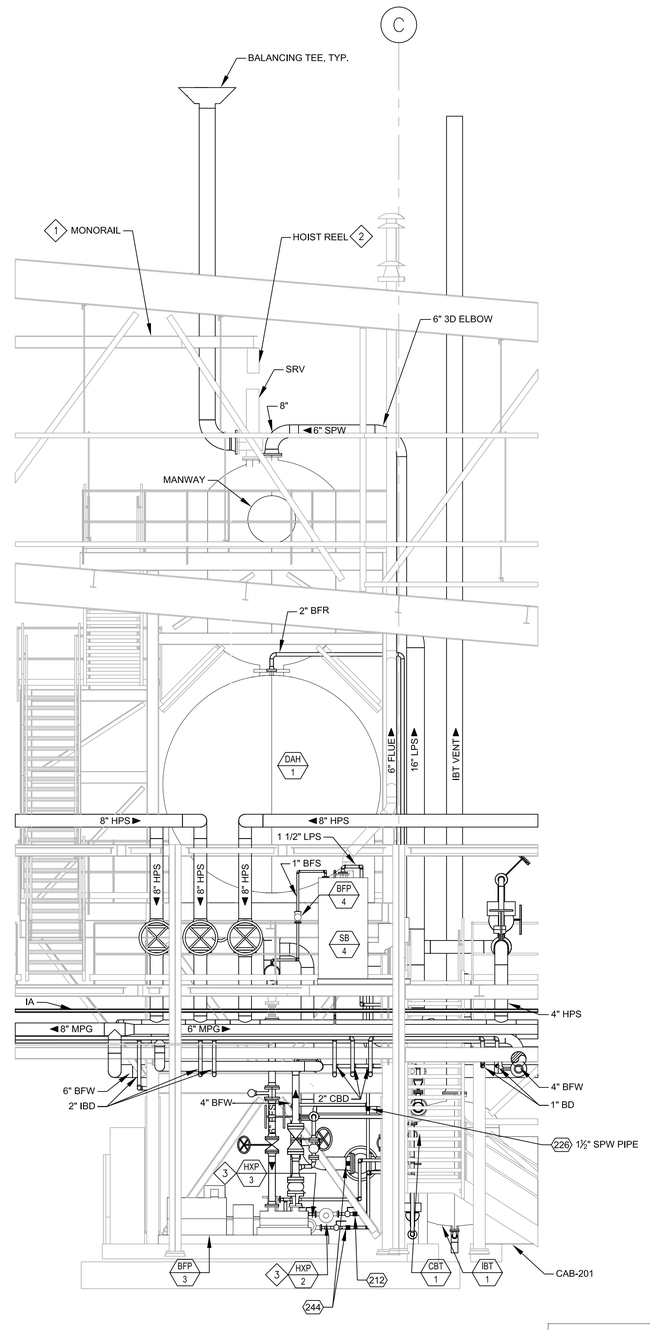

2 SECTION - DEAERATOR
M102 M304 SCALE: 1/4" = 1"-0"

1/4"=1' 0 2 4 8 12

REGISTERED PROFESSIONAL ENGINEER MICHAEL S. CALLAHAN No. M21188 MECHANICAL STATE OF CALIFORNIA

SHEET NOTES

1. SEE SHEET M601, M602 AND M603 FOR EQUIPMENT AND PIPE SCHEDULES.
2. PIPE INSULATION ARE NOT SHOWN. SEE SCHEDULE ON SHEET M603 FOR PIPE INSULATION PER SYSTEM.
3. SEE PIPE SUPPORT SCHEDULE ON DRAWING M603 FOR PIPE SUPPORT DETAIL.

KEY NOTES

1. MONORAIL: ONE-TON CAPACITY. MONORAIL MUST BE ABLE TO LIFT ITEMS TO ALL DEAERATOR ACCESS PLATFORM LEVELS. MONORAIL MINIMUM REACH: 36" BEYOND EDGE OF PLATFORM RAILING. SEE PLAN VIEW FOR ROUTE.
2. HOIST REEL: ONE-TON CAPACITY MOTORIZED WIRE-ROPE HOIST WITH 50' LIFT AT 16 FPM. ELECTRIC LIFTING MOTOR POWER: 1 HP, 460 VOLT, 3Ø, 60 HZ, WITH THERMAL OVERLOAD PROTECTION. CONTROL: NEMA 3R PUSHBUTTON, 46' LONG CONTROL CORD. HOIST: H3 RATED, DISC MOTOR BRAKE, OVERLOAD LIMITING CLUTCH. TROLLEY: MANUAL. WEIGHT: 289 LB. COFFING MODEL 13246W.
3. PROVIDE GRAVITY SUPPORT FOR INLINE PUMP MOTORS HXP-2 AND HXP-3.
4. SUPPORT AND BRACE BOILER FLUE FOR BOILER SB-4.

ZONE	LETTER	DESCRIPTION	DRAWN	DATE	APPRVD

REVISIONS

DRAWN J.HO	DATE
DESIGNED M.CALLAHAN	DATE
CHECKED P.YALLOURIS	DATE
A&E PM G.HITE	DATE
NASA PM W.LEE	DATE
REQUESTER G.RAICHE	DATE
R&QA	DATE
SAFETY/PSM D.FRASER	DATE
SUPERVISOR S.FRANKEL	DATE

Ames Research Center
Moffett Field, California

REPLACE ARC JET COMPLEX SVS BOILER
MECHANICAL

SECTIONS - DEAERATOR

SIZE	CAGE CODE		REV
D	25307	A 231-1300-M304	
SCALE		INDEX	SHEET OF

FILE NAME: 231-M304.DWG 12/12/12

DWG: R:\234A\80212\32.0001 (K11027) Replace ArcJect Complex SVS Boiler Final Design\500 CAD\501 BIM_Plant3D\Orthos\M304 - SECTIONS - DEAERATOR.dwg Version: 18.1s (LMS Tech) User: jjho
DATE: Feb 01, 2013 - 12:48:50 pm

DWG NO.	SH.	REV
A231-1300-M305		

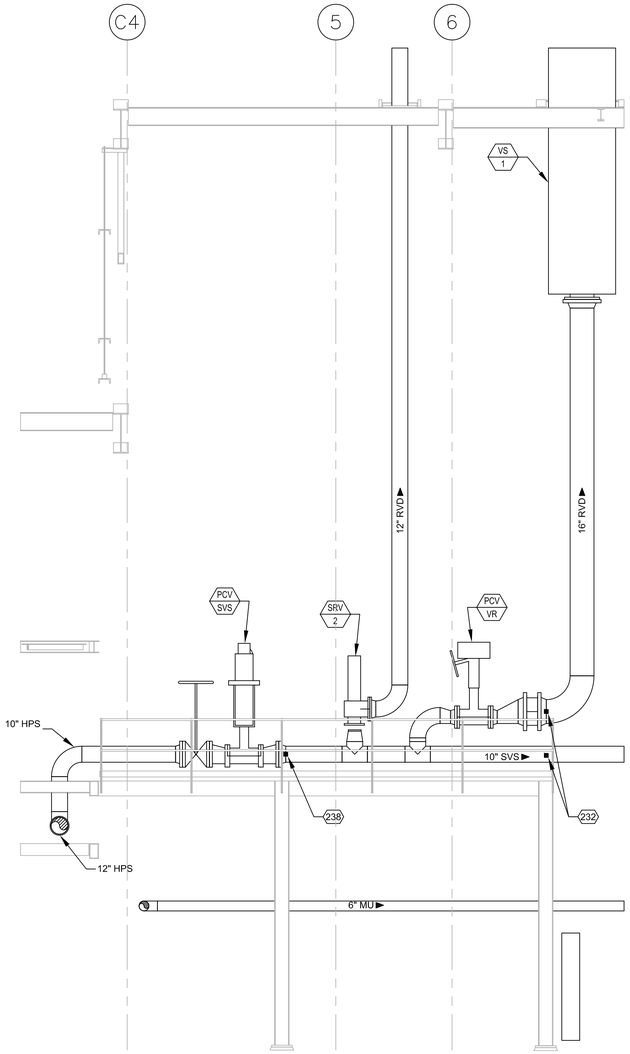

1 SECTION - SVS PRV
M102 M305 SCALE: 1/4" = 1"-0"

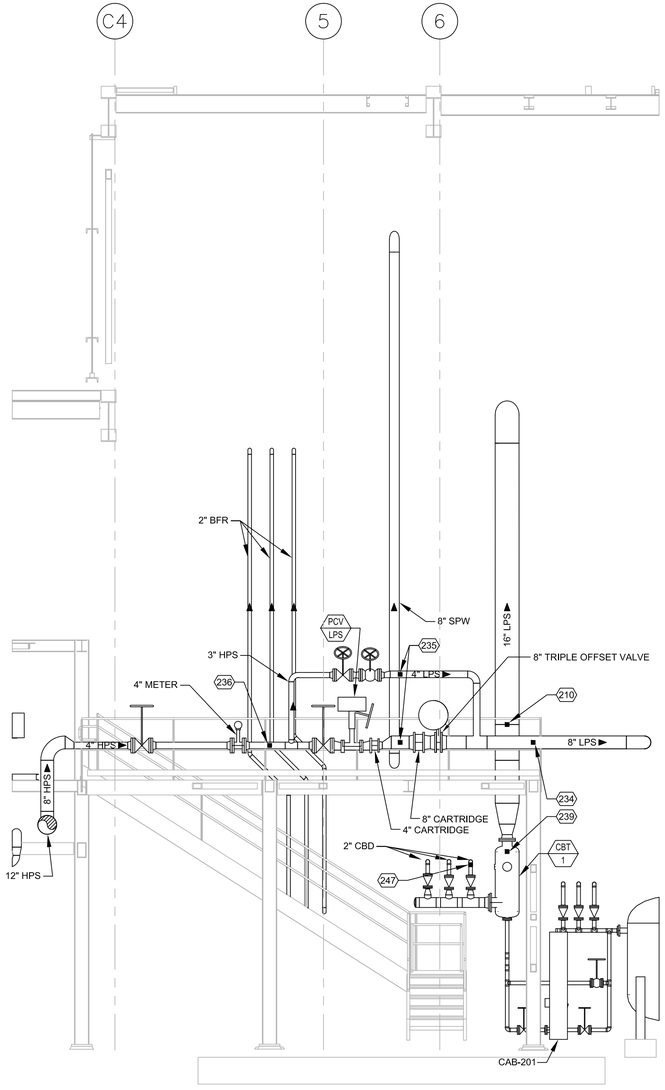

2 SECTION - AUXILIARY STEAM PRV
M102 M305 SCALE: 1/4" = 1"-0"

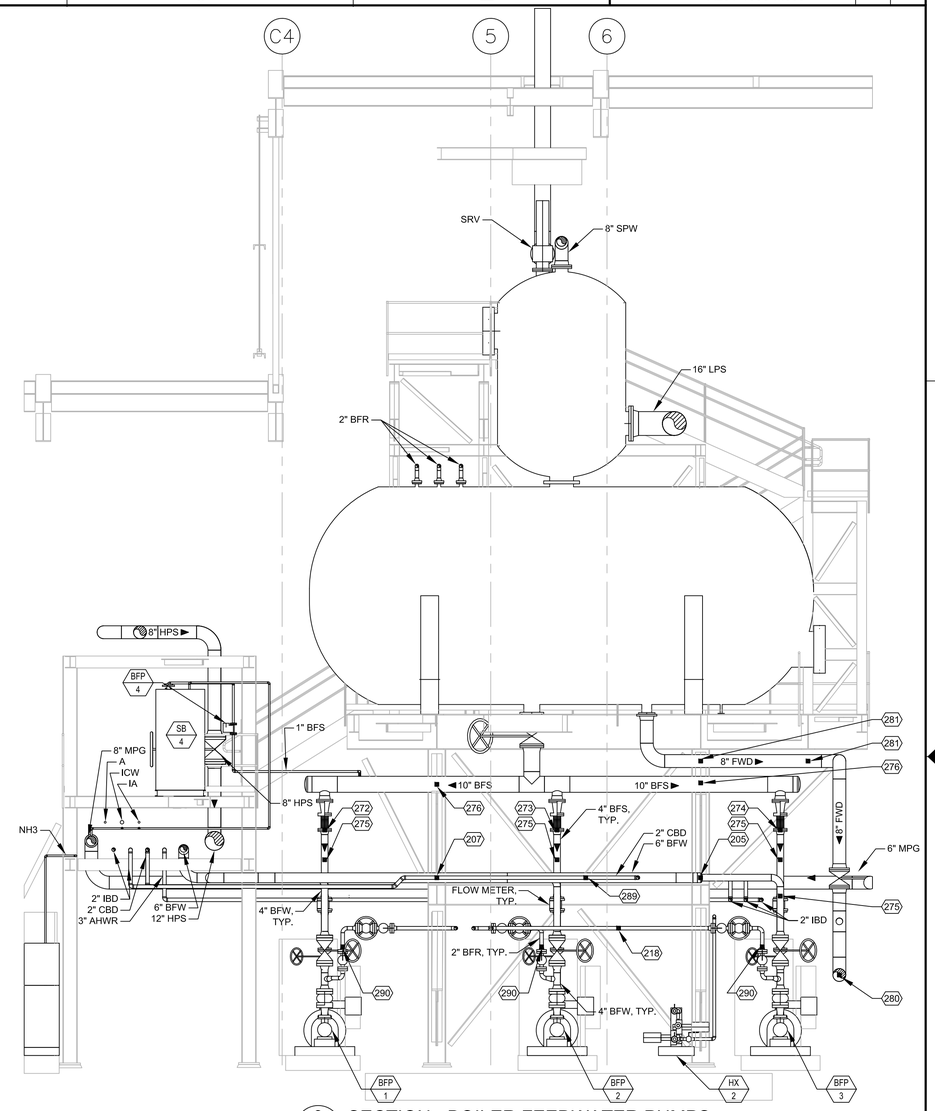

3 SECTION - BOILER FEEDWATER PUMPS
M102 M305 SCALE: 1/4" = 1"-0"

SHEET NOTES

1. SEE SHEET M601, M602 AND M603 FOR EQUIPMENT AND PIPE SCHEDULES.
2. PIPE INSULATION ARE NOT SHOWN. SEE SCHEDULE ON SHEET M603 FOR PIPE INSULATION PER SYSTEM.
3. SEE PIPE SUPPORT SCHEDULE ON DRAWING M603 FOR PIPE SUPPORT DETAIL.

KEY NOTES

1/4"=1' 0 2 4 8 12

REGISTERED PROFESSIONAL ENGINEER MICHAEL S. CALLAHAN No. M21188 MECHANICAL STATE OF CALIFORNIA

ZONE	LETTER	DESCRIPTION	DRAWN	DATE	APPRVD

REVISIONS

DRAWN J.HO	DATE
DESIGNED M.CALLAHAN	DATE
CHECKED P.YALLOURIS	DATE
A&E PM G.HITE	DATE
NASA PM W.LEE	DATE
REQUESTER G.RAICHE	DATE
R&QA	DATE
SAFETY/PSM D.FRASER	DATE
SUPERVISOR S.FRANKEL	DATE

Ames Research Center
Moffett Field, California

REPLACE ARC JET COMPLEX SVS BOILER
MECHANICAL

SECTIONS - HPS

SIZE	CAGE CODE		REV
D	25307	A 231-1300-M305	
SCALE		INDEX	SHEET OF

FILE NAME: 231-M305.DWG 12/12/12

DWG: R:\234A\60212932.0001 (K11027) Replace Arc-Jet Complex SVS Boiler Final Design\500 CAD\501 BIM_Plant3D\Ortho\M305 - SECTIONS - HPS.dwg Version: 18.1s (LMS Tech) User: jjho
DATE: Feb 01, 2013 - 12:48:56 pm

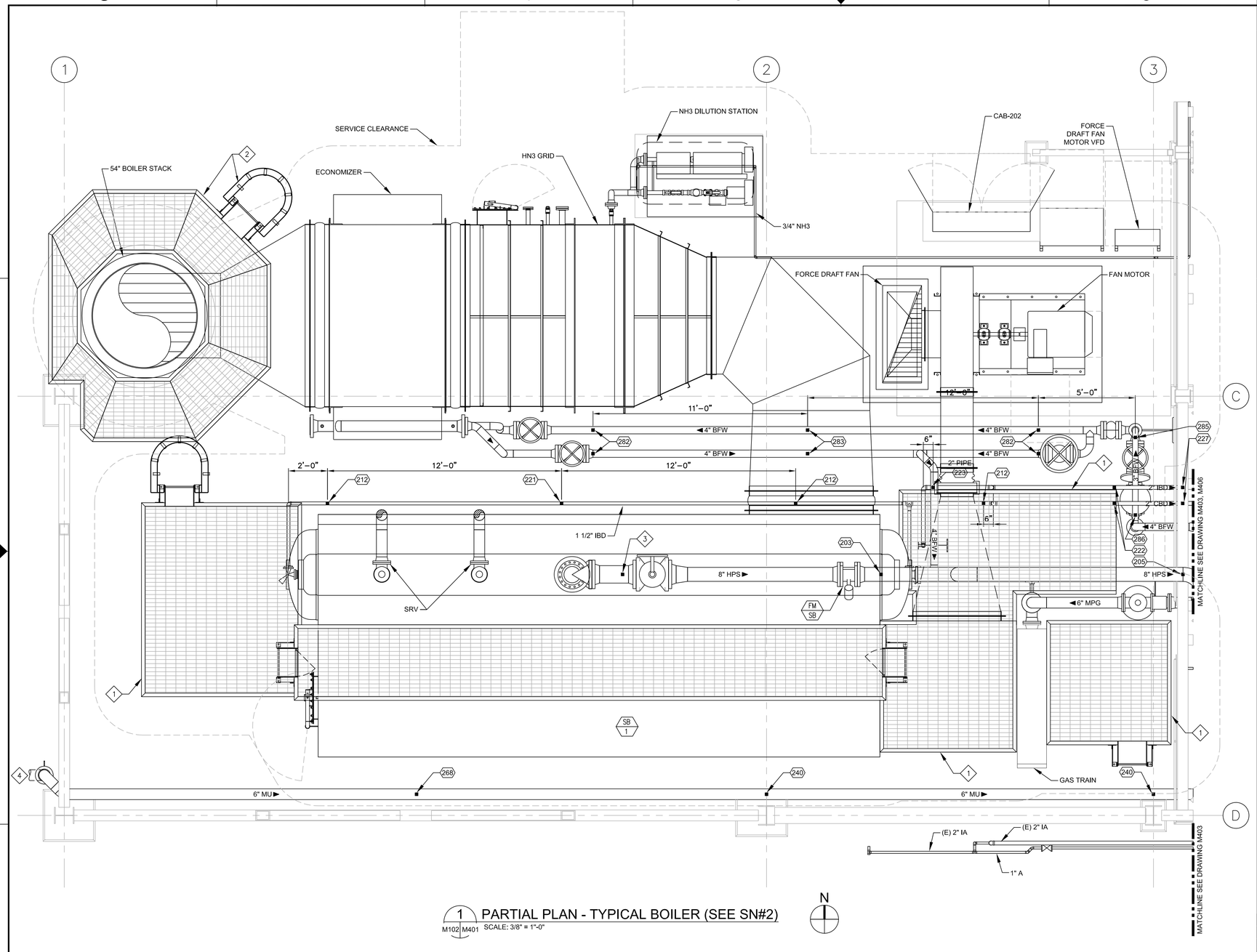

1 M102 M401 PARTIAL PLAN - TYPICAL BOILER (SEE SN#2)
SCALE: 3/8" = 1"-0"

N

3/8"=1' 0 1 2 4 6 8

SHEET NOTES

1. SEE SHEET M601, M602 AND M603 FOR EQUIPMENT AND PIPE SCHEDULES.
2. STEAM BOILERS SB-1, SB-2 AND SB-3 ARE SAME IN FUNCTION, AND SIMILAR IN LAYOUT. BOILER SB-1 IS SHOWN. BOILER SB-2 IS OPPOSITE HAND FROM SB-1. BOILER SB-3 IS ROTATED 180° FROM SB-1.
3. SEE PIPE SUPPORT SCHEDULE ON DRAWING M603 FOR PIPE SUPPORT DETAIL.

KEY NOTES

1. CATWALK DESIGN BY BOILER MANUFACTURER.
2. BID OPTION 3: BOILER STACK PLATFORM WITH LADDER AND CAGE.
3. BOILER MANUFACTURER SUPPLIED PIPE SUPPORT.
4. SEE CIVIL DRAWING FOR CONTINUATION.

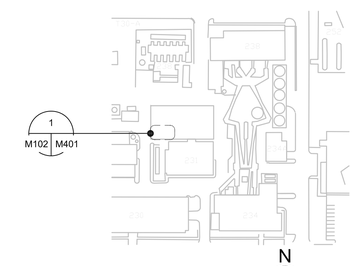

KEY PLAN

N

ZONE	LETTER	DESCRIPTION	DRAWN	DATE	APPRVD

REVISIONS

DRAWN J.HO	DATE
DESIGNED M.CALLAHAN	DATE
CHECKED P.YALLOURIS	DATE
A&E PM G.HITE	DATE
NASA PM W.LEE	DATE
REQUESTER G.RAICHE	DATE
R&QA	DATE
SAFETY/PSM D.FRASER	DATE
SUPERVISOR S.FRANKEL	DATE

REGISTERED PROFESSIONAL ENGINEER MICHAEL S. CALLAHAN No. M21188 MECHANICAL STATE OF CALIFORNIA

Ames Research Center
Moffett Field, California

REPLACE ARC JET COMPLEX SVS BOILER
MECHANICAL

PARTIAL PLAN - TYPICAL BOILER

SIZE	CAGE CODE		REV
D	25307	A 231-1300-M401	
SCALE		INDEX	SHEET OF

FILE NAME: 231-M401.DWG 12/12/12

DWG: R:\234A\80231202.0001 (K11027) Replace ArcJect Complex SVS Boiler Final Design\500 CAD\501 BIM_Plant3D\Ortho\M401 - PARTIAL PLAN - BOILER 1.dwg Version: 18.1s (LMS Tech) User: jjho
DATE: Feb 01, 2013 - 12:48:02 pm

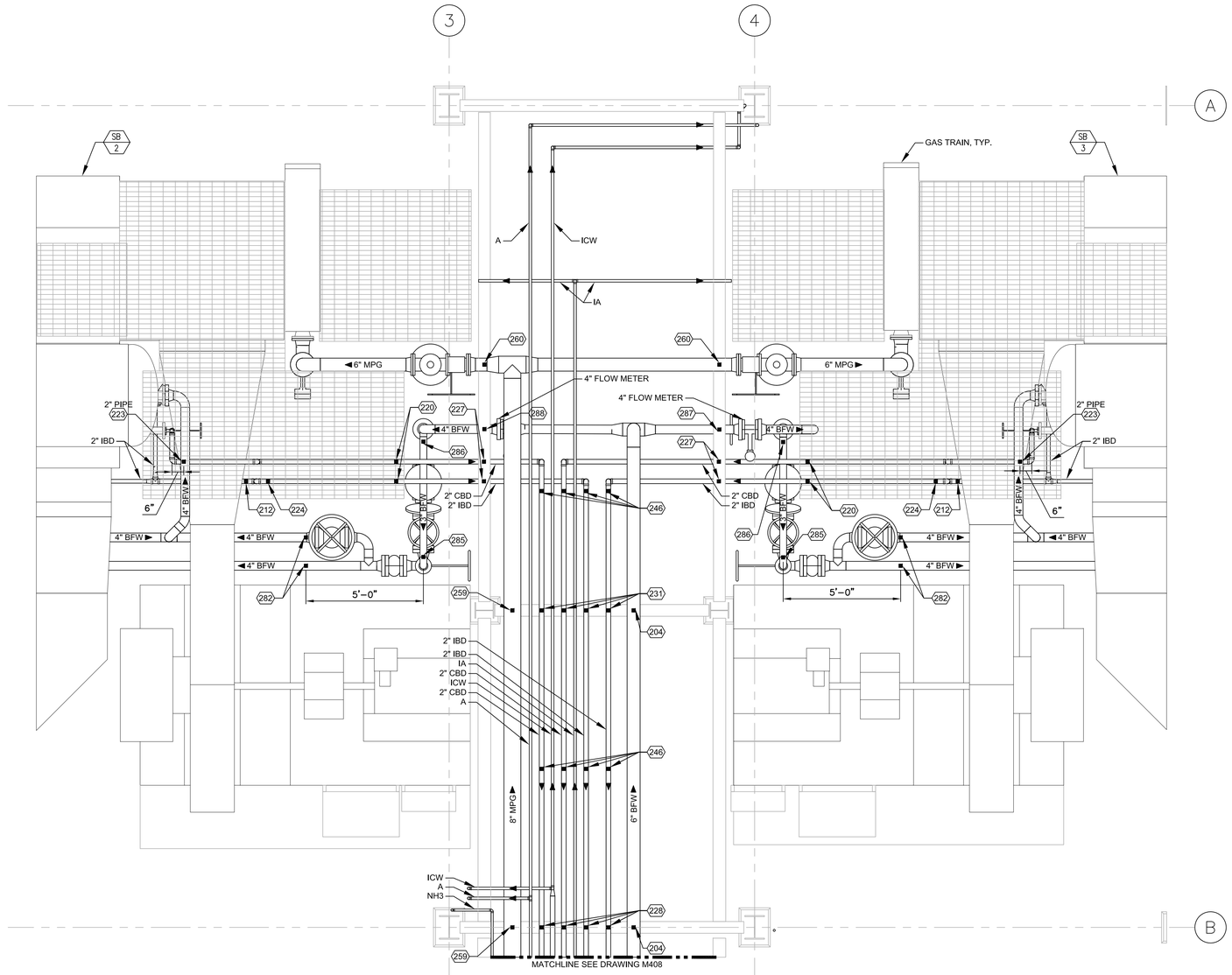

1 PARTIAL PLAN - BOILER SB-2 & SB-3 EL. 13'-6" AFF
M102 M402 SCALE: 3/8" = 1"-0"

N

3/8"=1' 0 1 2 4 6 8

SHEET NOTES

1. SEE SHEET M601, M602 AND M603 FOR EQUIPMENT AND PIPE SCHEDULES.
2. PIPE INSULATION ARE NOT SHOWN. SEE SCHEDULE ON SHEET M603 FOR PIPE INSULATION PER SYSTEM.
3. SEE PIPE SUPPORT SCHEDULE ON DRAWING M603 FOR PIPE SUPPORT DETAIL.

KEY NOTES

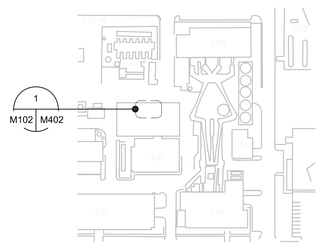

KEY PLAN N

ZONE	LETTER	DESCRIPTION	DRAWN	DATE	APPRVD

REVISIONS

DRAWN J.HO	DATE	
DESIGNED M.CALLAHAN	DATE	
CHECKED P.YALLOURIS	DATE	
A&E PM G.HITE	DATE	
NASA PM W.LEE	DATE	
REQUESTER G.RAICHE	DATE	
R&QA	DATE	
SAFETY/PSM D.FRASER	DATE	
SUPERVISOR S.FRANKEL	DATE	

REGISTERED PROFESSIONAL ENGINEER MICHAEL S. CALLAHAN No. M21188 MECHANICAL STATE OF CALIFORNIA

Ames Research Center
Moffett Field, California

REPLACE ARC JET COMPLEX SVS BOILER
MECHANICAL

PARTIAL PLAN - PIPING TO SB-2 & SB-3 GROUND LEVEL

SIZE	CAGE CODE		REV
D	25307	A 231-1300-M402	
SCALE		INDEX	SHEET OF

FILE NAME: 231-M402.DWG 12/12/12

DWG:R:\234A\60212932.0001 (K11027) Replace Arc-Ject Complex SVS Boiler Final Design\500 CAD\501 BIM_Plant\3D\Orthos\M402 - PARTIAL PLAN - BOILER 2 & 3.dwg Version: 18.1s (LMS Tech) User: jjho
DATE: Feb 01, 2013 - 12:49:06 pm

DWG NO.	SH.	REV
A231-1300-M403		

SHEET NOTES

1. SEE SHEET M601, M602 AND M603 FOR EQUIPMENT AND PIPE SCHEDULES.
2. PIPE INSULATION ARE NOT SHOWN. SEE SCHEDULE ON SHEET M603 FOR PIPE INSULATION PER SYSTEM.
3. SEE PIPE SUPPORT SCHEDULE ON DRAWING M603 FOR PIPE SUPPORT DETAIL.

KEY NOTES

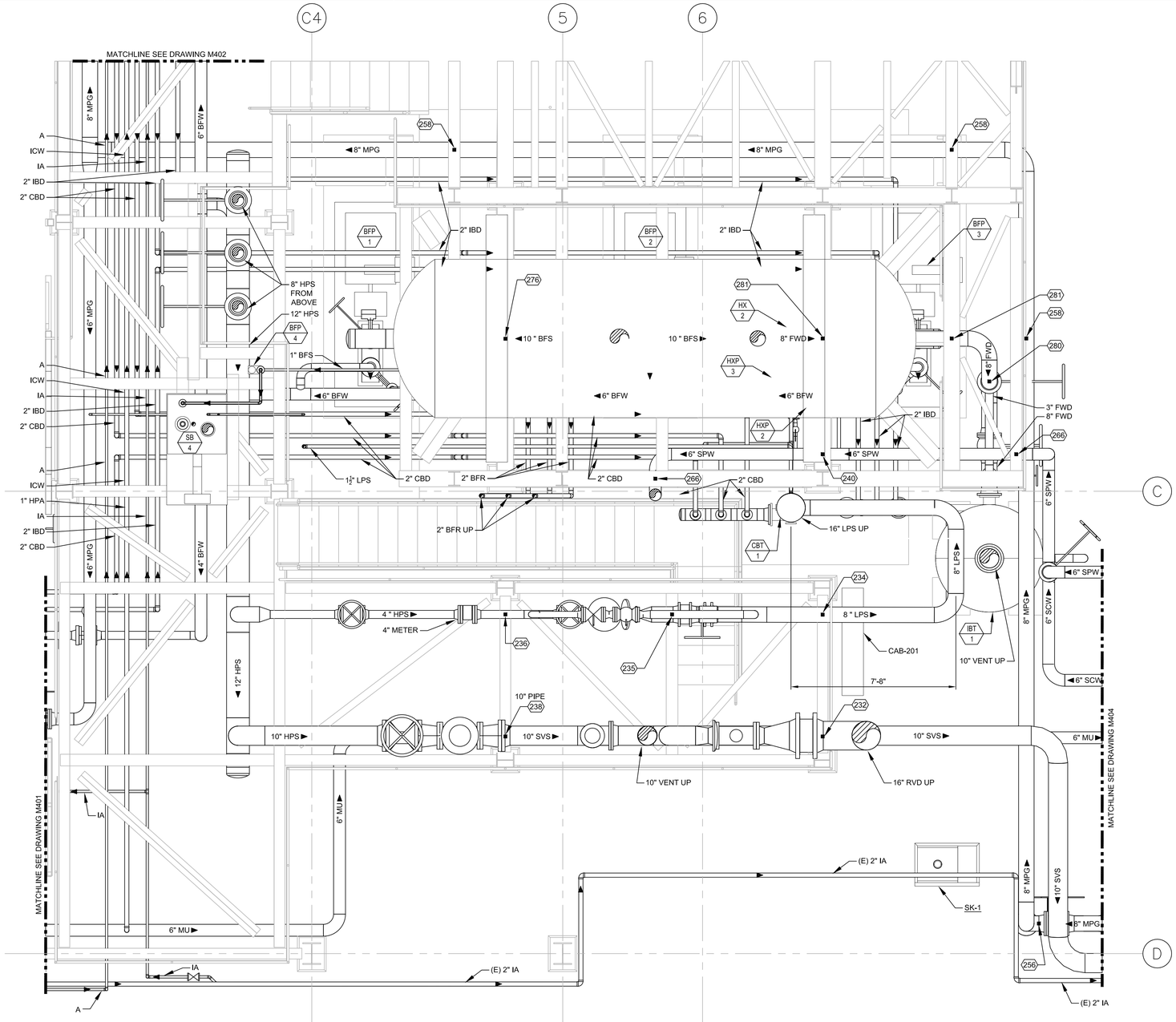

1 M102 M403 PARTIAL PLAN - DEAERATOR EL. 20'-0" AFF

SCALE: 3/8" = 1"-0"

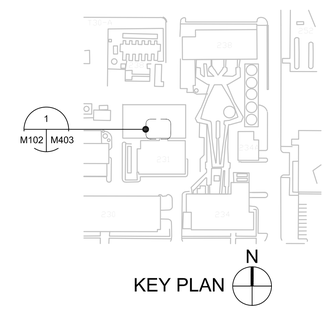

KEY PLAN

ZONE	LETTER	DESCRIPTION	DRAWN	DATE	APPRVD

REVISIONS

DRAWN J.HO	DATE
DESIGNED M.CALLAHAN	DATE
CHECKED P.YALLOURIS	DATE
A&E PM G.HITE	DATE
NASA PM W.LEE	DATE
REQUESTER G.RAICHE	DATE
R&QA	DATE
SAFETY/PSM D.FRASER	DATE
SUPERVISOR S.FRANKEL	DATE

REGISTERED PROFESSIONAL ENGINEER MICHAEL S. CALLAHAN No. M21188 MECHANICAL STATE OF CALIFORNIA

Ames Research Center
Moffett Field, California

REPLACE ARC JET COMPLEX SVS BOILER
MECHANICAL

PARTIAL PLAN - DEAERATOR EL. 20'-0" AFF

SIZE	CAGE CODE		REV
D	25307	A 231-1300-M403	
SCALE		INDEX	SHEET OF

FILE NAME: 231-M403.DWG 12/12/12

3/8"=1'

DWG: R:\234A\60212932.0001 (K11027) Replace Arc Jet Complex SVS Boiler Final Design\500 CAD\501 BIM_Plant3D\Orthos\M403 - PARTIAL PLAN - DEAERATOR GROUND LEVEL.dwg Version: 18.1s (LMS Tech) User: jjho
DATE: Feb 01, 2013 - 12:49:09 pm

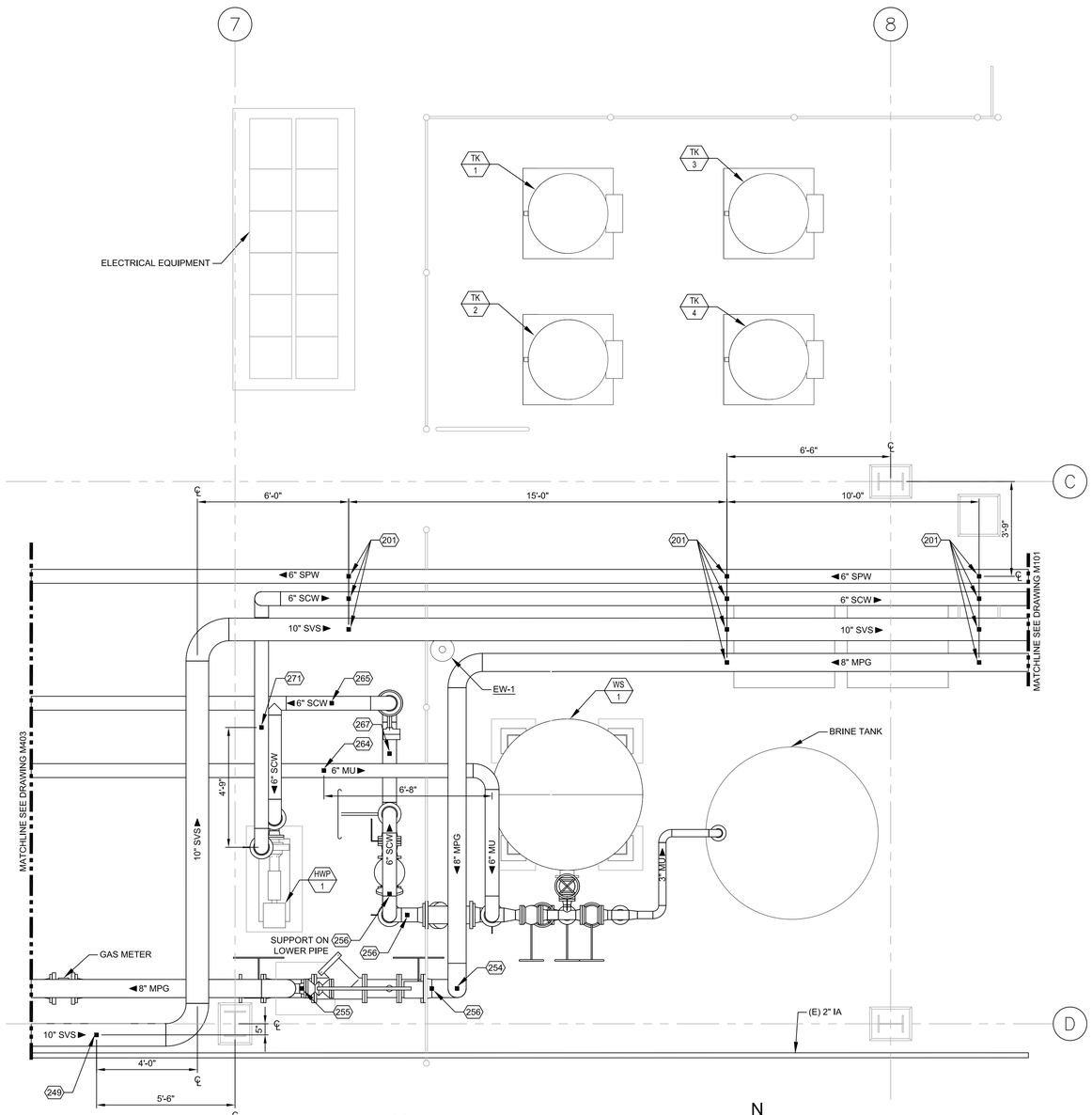

1 PARTIAL PLAN - WATER SOFTENER
M102 M404 SCALE: 3/8" = 1"-0"

N

SHEET NOTES

1. SEE SHEET M601, M602 AND M603 FOR EQUIPMENT AND PIPE SCHEDULES.
2. PIPE INSULATION ARE NOT SHOWN. SEE SCHEDULE ON SHEET M603 FOR PIPE INSULATION PER SYSTEM.
3. SEE PIPE SUPPORT SCHEDULE ON DRAWING M603 FOR PIPE SUPPORT DETAIL.

KEY NOTES

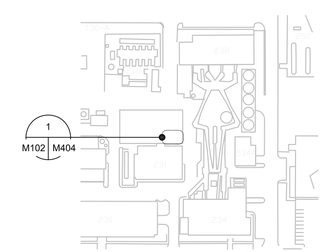

KEY PLAN

N

ZONE	LETTER	DESCRIPTION	DRAWN	DATE	APPRVD

REVISIONS

DRAWN J.HO	DATE
DESIGNED M.CALLAHAN	DATE
CHECKED P.YALLOURIS	DATE
A&E PM G.HITE	DATE
NASA PM W.LEE	DATE
REQUESTER G.RAICHE	DATE
R&QA	DATE
SAFETY/PSM D.FRASER	DATE
SUPERVISOR S.FRANKEL	DATE

Ames Research Center
Moffett Field, California

REPLACE ARC JET COMPLEX SVS BOILER
MECHANICAL

PARTIAL PLAN - WATER SOFTENER

SIZE	CAGE CODE	DWG NO.	REV
D	25307	231-1300-M404	

SCALE | INDEX | SHEET OF

FILE NAME: 231-M404.DWG 12/12/12

REGISTERED PROFESSIONAL ENGINEER MICHAEL S. CALLAHAN No. M21188 MECHANICAL STATE OF CALIFORNIA

3/8"=1' 0 1 2 4 6 8

DWG: R:\234A\60212032.0001 (K11027) Replace Arcject Complex SVS Boiler Final Design\500 CAD\501 BIM_Plant3D\Orthos\M404 - PARTIAL PLAN - WATER SOFTENER.dwg Version: 18.1s (LMS Tech) User: jlho
DATE: Feb 01, 2013 - 12:49:14 pm

DWG NO.	SH.	REV
A231-1300-M405		

SHEET NOTES

1. SEE SHEET M601, M602 AND M603 FOR EQUIPMENT AND PIPE SCHEDULES.
2. PIPE INSULATION ARE NOT SHOWN. SEE SCHEDULE ON SHEET M603 FOR PIPE INSULATION PER SYSTEM.
3. SEE PIPE SUPPORT SCHEDULE ON DRAWING M603 FOR PIPE SUPPORT DETAIL.

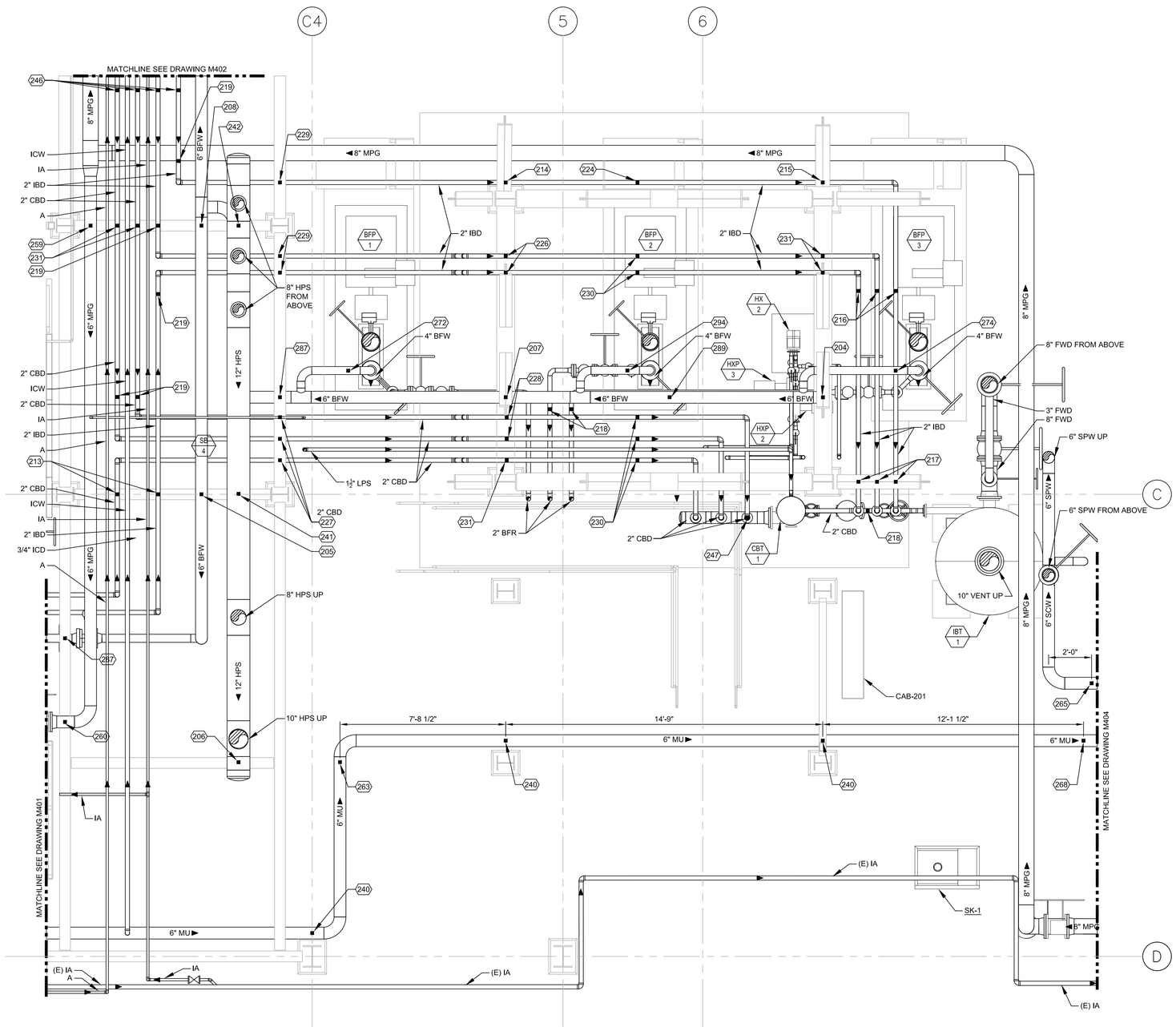

1 M102 M405 PARTIAL PLAN - DEAERATOR EL. 13'-6" AFF
SCALE: 3/8" = 1'-0"

KEY NOTES

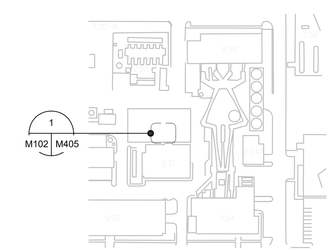

KEY PLAN

ZONE	LETTER	DESCRIPTION	DRAWN	DATE	APPRVD

REVISIONS

DRAWN J.HO	DATE
DESIGNED M.CALLAHAN	DATE
CHECKED P.YALLOURIS	DATE
A&E PM G.HITE	DATE
NASA PM W.LEE	DATE
REQUESTER G.RAICHE	DATE
R&QA	DATE
SAFETY/PSM D.FRASER	DATE
SUPERVISOR S.FRANKEL	DATE

REGISTERED PROFESSIONAL ENGINEER MICHAEL S. CALLAHAN No. M21188 MECHANICAL STATE OF CALIFORNIA

Ames Research Center
Moffett Field, California

REPLACE ARC JET COMPLEX SVS BOILER
MECHANICAL

PARTIAL PLAN - DEAERATOR EL. 13'-6" AFF

SIZE	CAGE CODE		REV
D	25307	A 231-1300-M405	
SCALE		INDEX	SHEET OF

FILE NAME: 231-M405.DWG 12/12/12

3/8"=1'

DWG: R:\234A\80212032.0001 (K11027) Replace Arc-Jet Complex SVS Boiler Final Design\500 CAD\501 BIM_ Plant3D\Ortho's\M408 - PARTIAL PLAN - DEAERATOR EL. 13-6 AFF.dwg Version: 18.1s (LMS Tech) User: jlho
DATE: Feb 01, 2013 - 12:49:18 pm

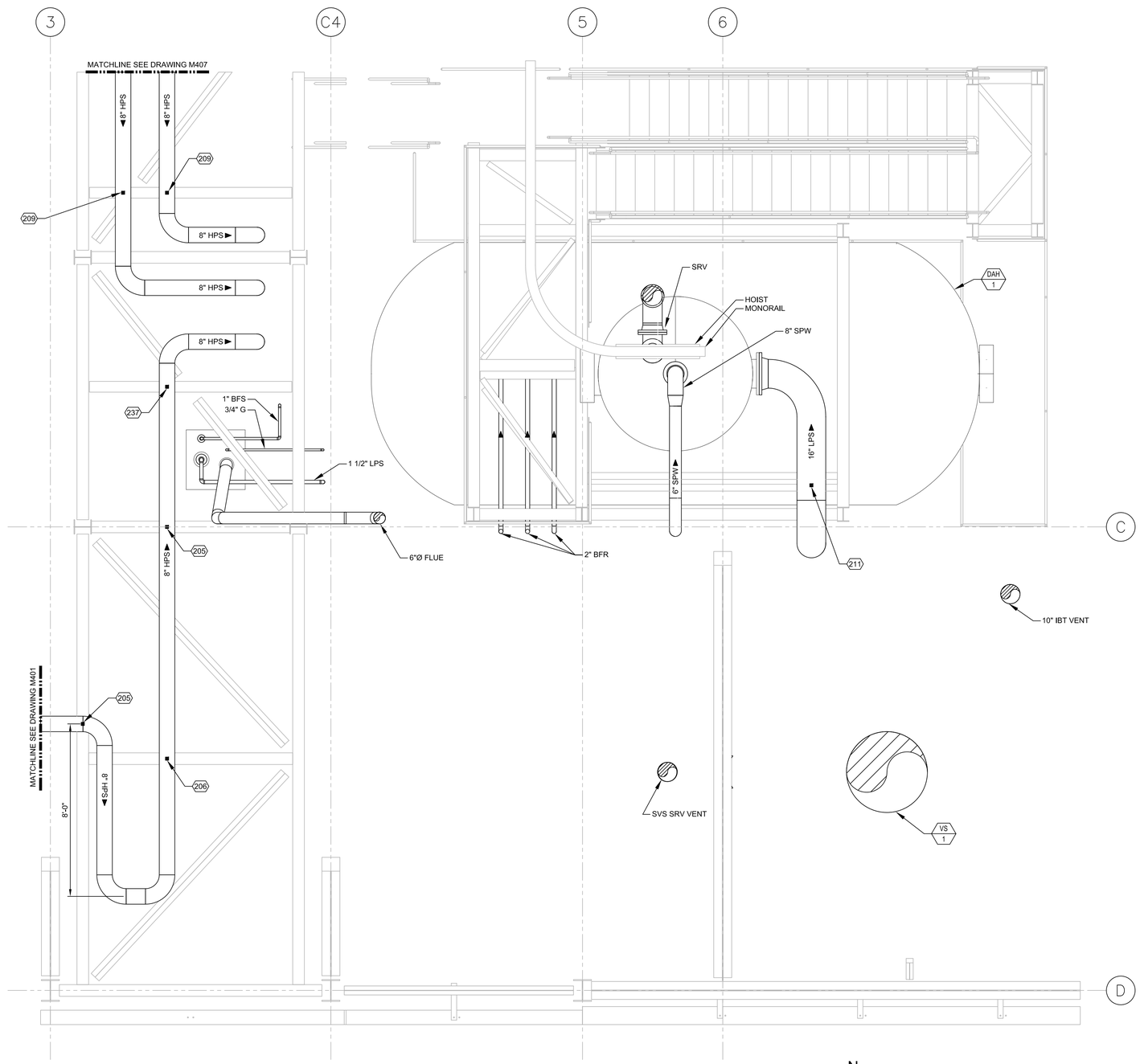

1 M102 M406 PARTIAL PLAN - DEAERATOR UPPER LEVEL (ABOVE EL. 19'-6" AFF)

SCALE: 3/8" = 1"-0"

N

3/8"=1' 0 1 2 4 6 8

SHEET NOTES

1. SEE SHEET M601, M602 AND M603 FOR EQUIPMENT AND PIPE SCHEDULES.
2. PIPE INSULATION ARE NOT SHOWN. SEE SCHEDULE ON SHEET M603 FOR PIPE INSULATION PER SYSTEM.
3. SEE PIPE SUPPORT SCHEDULE ON DRAWING M603 FOR PIPE SUPPORT DETAIL.

KEY NOTES

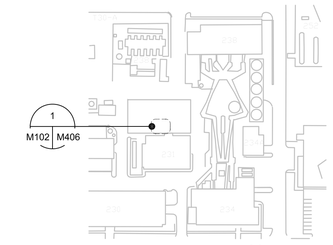

KEY PLAN

ZONE	LETTER	DESCRIPTION	DRAWN	DATE	APPRVD

REVISIONS

DRAWN J.HO	DATE
DESIGNED M.CALLAHAN	DATE
CHECKED P.YALLOURIS	DATE
A&E PM G.HITE	DATE
NASA PM W.LEE	DATE
REQUESTER G.RAICHE	DATE
R&QA	DATE
SAFETY/PSM D.FRASER	DATE
SUPERVISOR S.FRANKEL	DATE

REGISTERED PROFESSIONAL ENGINEER MICHAEL S. CALLAHAN No. M21188 MECHANICAL STATE OF CALIFORNIA

Ames Research Center
Moffett Field, California

REPLACE ARC JET COMPLEX SVS BOILER
MECHANICAL

PARTIAL PLAN - DEAERATOR UPPER LEVEL

SIZE	CAGE CODE		REV
D	25307	231-1300-M406	
SCALE		INDEX	SHEET OF

FILE NAME: 231-M406.DWG 12/12/12

DWG: P:\234A\6021\2932.0001 (K11027) Replace Arcjet Complex SVS Boiler Final Design\500 CAD\501 BIM_Plant3D\Orthos\M405 - PARTIAL PLAN - DEAERATOR UPPER LEVEL.dwg Version: 18.1s (LMS Tech) User: jjlho
DATE: Feb 01, 2013 - 12:49:22 pm

DWG NO.	SH.	REV
A231-1300-M407		

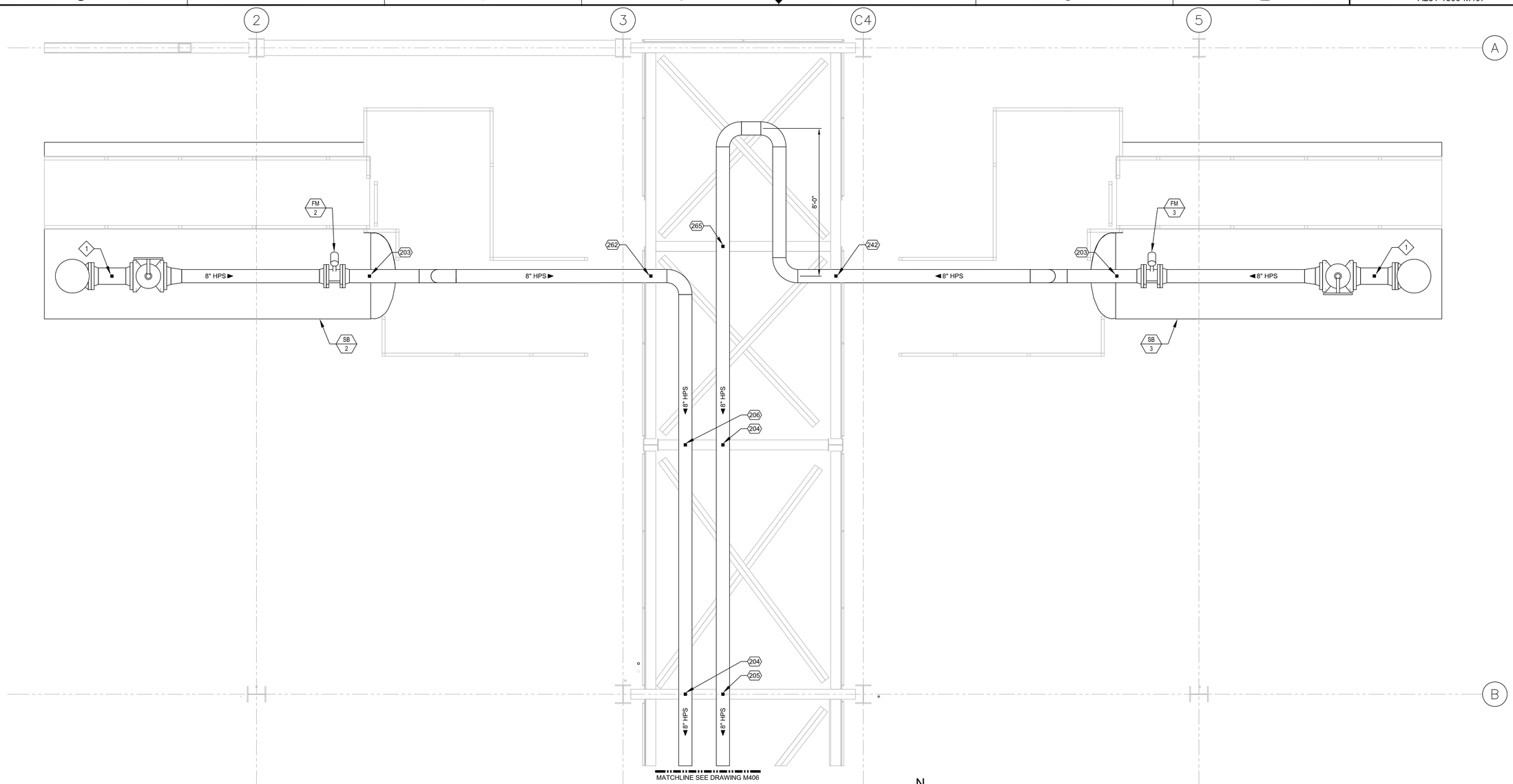

1 M102 M407 PARTIAL PLAN - BOILER SB-2 & SB-3 (ABOVE EL.19'-6" AFF)
SCALE: 3/8" = 1'-0"

SHEET NOTES

1. SEE SHEET M601, M602 AND M603 FOR EQUIPMENT AND PIPE SCHEDULES.
2. PIPE INSULATION ARE NOT SHOWN. SEE SCHEDULE ON SHEET M603 FOR PIPE INSULATION PER SYSTEM.
3. SEE PIPE SUPPORT SCHEDULE ON DRAWING M603 FOR PIPE SUPPORT DETAIL.

KEY NOTES

1. BOILER MANUFACTURER SUPPLIED PIPE SUPPORT.

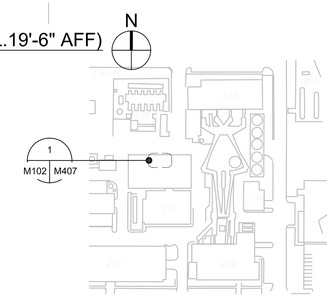

KEY PLAN
3/8"=1'

REGISTERED PROFESSIONAL ENGINEER MICHAEL S. CALLAHAN No. M21188 MECHANICAL STATE OF CALIFORNIA

ZONE	LETTER	DESCRIPTION	DRAWN	DATE	APPRVD

REVISIONS

DRAWN J.HO	DATE
DESIGNED M.CALLAHAN	DATE
CHECKED P.YALLOURIS	DATE
A&E PM G.HITE	DATE
NASA PM W.LEE	DATE
REQUESTER G.RAICHE	DATE
R&QA	DATE
SAFETY/PSM D.FRASER	DATE
SUPERVISOR S.FRANKEL	DATE

Ames Research Center
Moffett Field, California

REPLACE ARC JET COMPLEX SVS BOILER
MECHANICAL

PARTIAL PLAN - PIPING TO SB-2 & SB-3 UPPER LEVEL

SIZE	CAGE CODE		REV
D	25307	A 231-1300-M407	
SCALE		INDEX	SHEET OF

FILE NAME: 231-M407.DWG 12/12/12

DWG: R:\234A\60212932.0001 (K11027) Replace Arcjet Complex SVS Boiler Final Design\500 CAD\501 BIM_Plant3D\Orthos\M407 - PARTIAL PLAN - BOILER 2 & 3 UPPER LEVEL.dwg Version: 18.1s (LMS Tech) User: jjho
DATE: Feb 01, 2013 - 12:49:27 pm

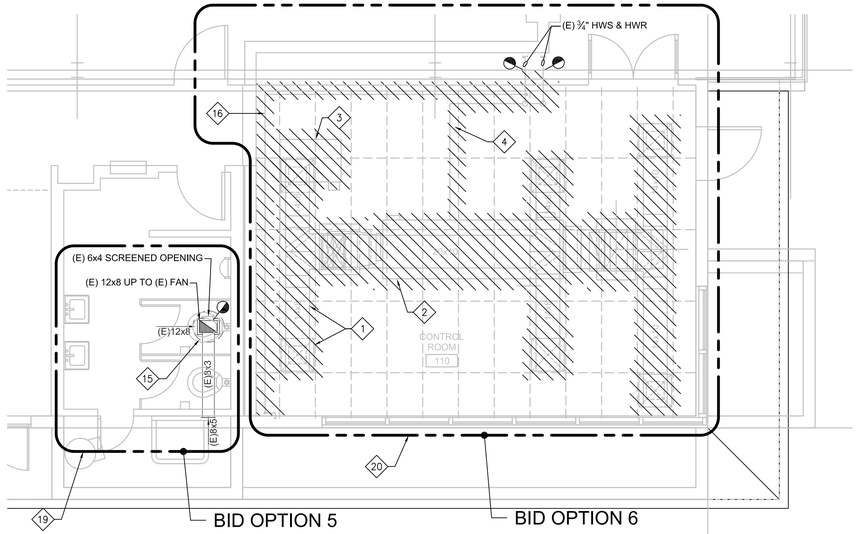

1 PARTIAL PLAN - N231 CONTROL ROOM HVAC DEMOLITION
M201 M408 SCALE: 1/4" = 1"-0"

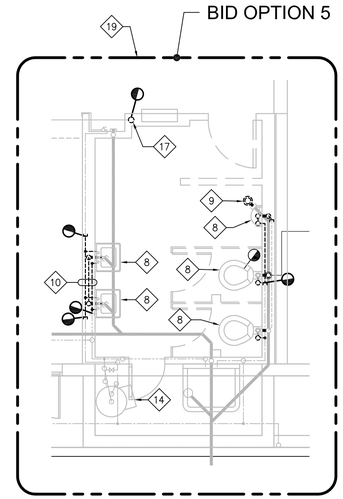

3 PARTIAL PLAN - N231 TOILET ROOM PLUMBING DEMOLITION
M201 M408 SCALE: 1/4" = 1"-0"

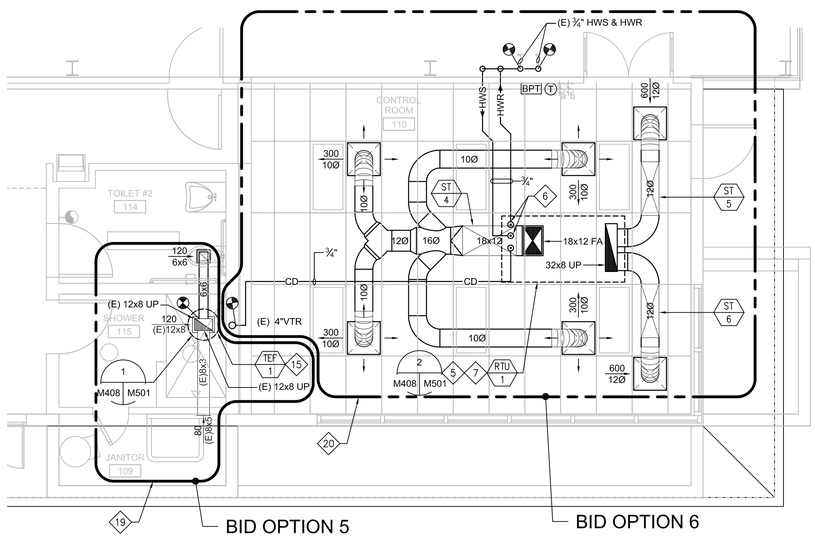

2 PARTIAL PLAN - N231 CONTROL ROOM HVAC
M201 M408 SCALE: 1/4" = 1"-0"

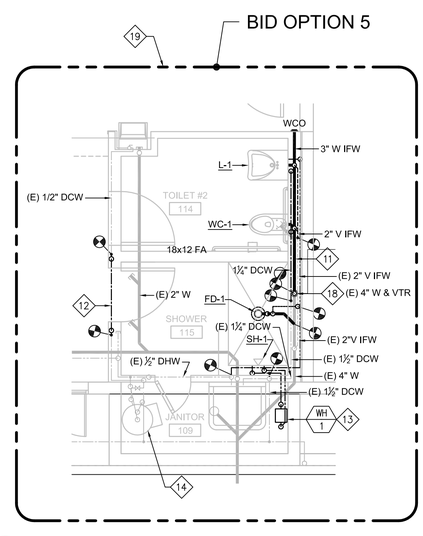

4 PARTIAL PLAN - N231 TOILET ROOM PLUMBING
M201 M408 SCALE: 1/4" = 1"-0"

SHEET NOTES

1. SEE SHEET M601, M602 AND M603 FOR EQUIPMENT AND PIPE SCHEDULES.
2. ALL NEW DUCTWORK IS ABOVE CEILING, AND BELOW ROOF.
3. REFER TO PLUMBING FIXTURE SCHEDULE FOR ROUGH-IN PIPE SIZES.
4. SANITARY WASTE PIPING IS BELOW FLOOR SLAB, UON. DOMESTIC WATER AND VENT PIPING IS ABOVE FLOOR, UON.
5. SEE SHEET G006 FOR GENERAL DESCRIPTION OF EACH BID OPTION.

KEY NOTES

1. REMOVE (E) DUCTWORK ABOVE CEILING, AND (E) AIR OUTLETS AND INLETS, TYPICAL IN CONTROL ROOM.
2. REMOVE (E) AIR HANDLING UNIT AND CONNECTED DUCTWORK ABOVE ROOF. PATCH ROOF PENETRATIONS.
3. REMOVE (E) CONDENSING UNIT AND CONNECTED REFRIGERANT PIPING ABOVE ROOF. NOTIFY COR FOR RECOVERY OF REFRIGERANT BY GOVERNMENT.
4. REMOVE (E) ¾" HWS AND HWR PIPING ABOVE ROOF.
5. INSTALL ROOFTOP AIR CONDITIONING UNIT (RTU-1) ON ROOF CURB. CONNECT SUPPLY AND RETURN DUCT TO RTU-1 THROUGH FRAMED ROOF PENETRATIONS.
6. HWS UP AND HWR FA. CONNECT TO RTU-1
7. CONNECT ¾" CD FROM RTU-1 TO SANITARY VENT BELOW ROOF.
8. REMOVE (E) PLUMBING FIXTURE AND CONNECTED PIPING BACK TO BRANCH TEE, AND CAP.
9. REMOVE (E) FCO AND PATCH FLOOR OPENING. ABANDON (E) WASTE PIPE UNDERGROUND.
10. REMOVE (E) ¾" DCW, ¾" DHW, 1½" V, 2" VTR, AND 2" W IN FURRED WALL WHERE NEW DOOR WILL BE INSTALLED. PATCH VTR ROOF OPENING. SEE ARCH DWGS FOR ROOFING PATCHING DETAIL.
11. INSTALL 3" WASTE IFW, AND CONNECT TO 4" SANITARY TEE THROUGH FLOOR.
12. INSTALL ½" DCW IFW WITH VERTICAL OFFSET OVER DOOR HEADER.
13. MOUNT WH-1 ON WALL. PROVIDE BACKING TO SECURE UNIT.
14. (E) WATER HEATER TO REMAIN.
15. REPLACE (E) FAN AND CURB ON ROOF.
16. REMOVE (E) 2" PVC VENT LINE INSIDE CONTROL ROOM.
17. REMOVE (E) 2" STANDPIPE RISER, AND CAP AT FLOOR LEVEL. IDENTIFY PIPE CAP WITH PERMANENT TAG WITH TEXT: "ABANDONED STANDPIPE".
18. REPLACE (E) WATER CLOSET CHAIR WITH 4" SANITARY TEE. RECONNECT OUTLET TO (E) 4" WASTE BELOW FLOOR. RECONNECT (E) VTR TO SANITARY TEE.
19. BID OPTION #5: ALL PLUMBING AND HVAC WORK IN THESE BOUNDARIES.
20. BID OPTION #6: ALL HVAC WORK IN THESE BOUNDARIES.

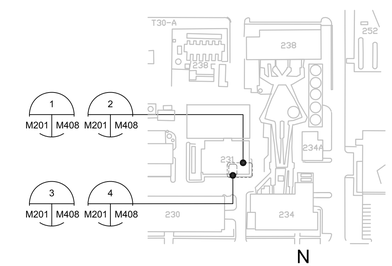

KEY PLAN

ZONE	LETTER	DESCRIPTION	DRAWN	DATE	APPRVD

REVISIONS

DRAWN J.HO	DATE
DESIGNED M.CALLAHAN	DATE
CHECKED P.YALLOURIS	DATE
A&E PM G.HITE	DATE
NASA PM W.LEE	DATE
REQUESTER G.RAICHE	DATE
R&QA	DATE
SAFETY/PSM	DATE
SUPERVISOR S.FRANKEL	DATE

Ames Research Center
Moffett Field, California

REPLACE ARC JET COMPLEX SVS BOILER
MECHANICAL

PARTIAL PLANS
N231 CONTROL ROOM & TOILET ROOMS

SIZE D | CAGE CODE 25307 | 231-1300-M408 | REV
SCALE — | INDEX | SHEET OF

FILE NAME: 231-M408.DWG 12/12/12

REGISTERED PROFESSIONAL ENGINEER MICHAEL S. CALLAHAN No. M21188 MECHANICAL STATE OF CALIFORNIA

1/4"=1' 0 2 4 8 12

DWG: R:\234\A6021293\2.0001 (K11027) Replace Arcjet Complex SVS Boiler Final Design\500 CAD\MISheet\231-M408_PARTIAL CONTROL ROOM.dwg Version: 18.1s (LMS Tech) User: jjho
DATE: Feb 01, 2013 - 12:49:34 pm

DWG NO.	SH.	REV
A231-1300-M501		

SHEET NOTES

1. ALL WELDED ATTACHMENTS TO PIPE REQUIRE AN ASME B31 WELD AND TEST REQUIREMENTS.
2. FOR W BEAM SIZES SEE STRUCTURAL DRAWINGS
3. FOR ADDITIONAL HPS PIPE SUPPORTS SEE SHEETS M502 & M510.
4. ALL VIEWS ARE ELEVATIONS UNLESS OTHERWISE NOTED.
5. ALL BASE PLATES SHALL HAVE STANDARD HOLES (1/16" LARGER THAN BOLT SIZE) OTHERWISE PROVIDE WASHER PLATE WITH 3/16" FILLED WELD ALL AROUND.

KEY NOTES

1. BOILER MANUFACTURER TO SUPPLY PIPE STANCHION AND ATTACHMENT TO UPPER DRUM OF BOILER.
2. PIPE INSULATION TO BE INSTALLED TO PROVIDE FOR THERMAL GROWTH OF PIPE WITHOUT DAMAGE TO THE INSULATION. MINIMUM 2" CLEARANCE ON EACH SIDE OF THE RESTRAINT.

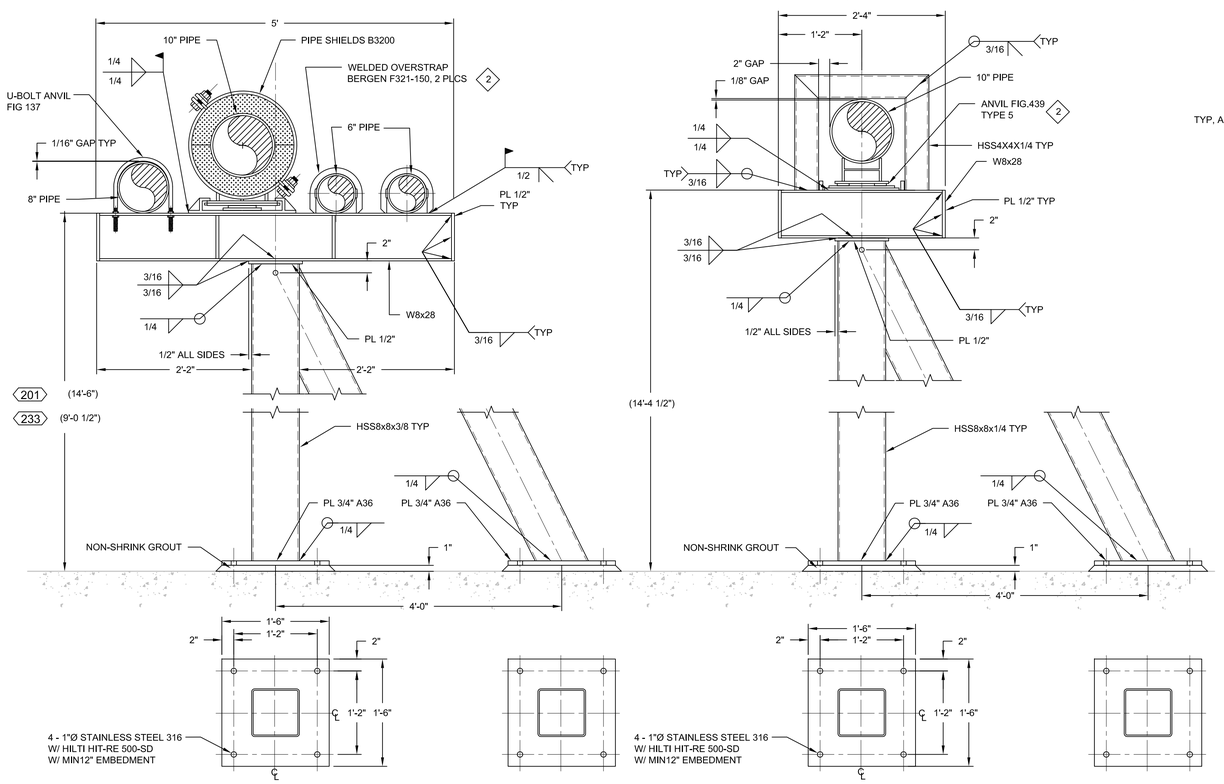

201 HPS / SCW / SPW / MPG SUPPORT
233 HPS / SCW / SPW / MPG SUPPORT
1 — 1"=1'-0"

7 249 HPS SUPPORT
1"=1'-0"

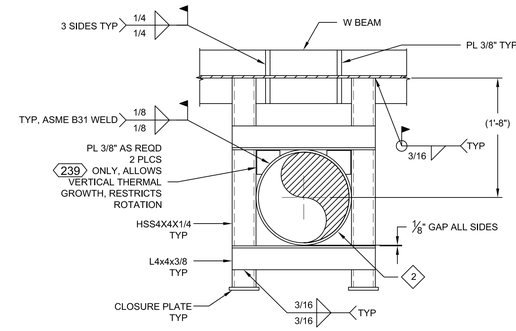

PLAN VIEW

239 CBD TANK (CBT 1) GUIDE SUPPORT
3 — 1"=1'-0"
210 HPS / LPS GUIDE SUPPORT

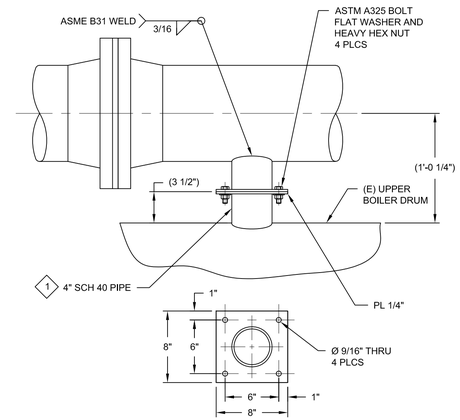

2 — 1-1/2"=1'-0"
203 HPS SUPPORT

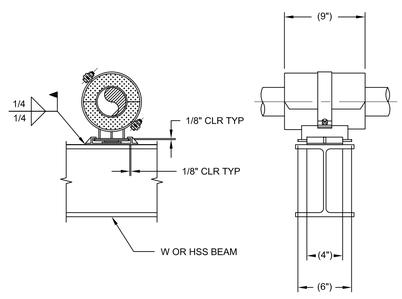

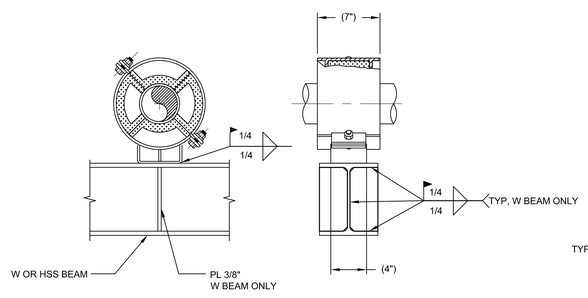

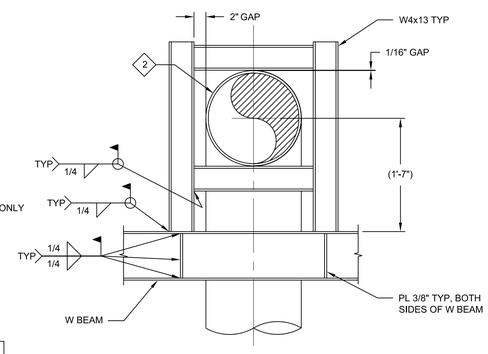

MAXIMUM ALLOWABLE LOAD (LB)												
PIPE SHIELDS	4"		6"		8"		10"		12"			
	LAT	VERT	LAT	VERT	LAT	VERT	LAT	VERT	LAT	VERT		
204 B3000	1008	840	1530	1275	2040	1700	2400	2000	2640	2200		
205 B3100	2016	1680	3060	2550	4080	3400	4800	4000	5280	4400		
206 B3200	3000	2500	4560	3800	6120	5100	7200	6000	7920	6600		
242 B3300	-		-		8160	6800	-		10560	8800		

4 — 1-1/2"=1'-0"
204 206 205 242 HPS / LPS / BFW GUIDE

MAXIMUM ALLOWABLE LOAD (LB)															
PIPE SHIELDS	4"			6"			8"			10"			12"		
	LAT	VERT	AX	LAT	VERT	AX	LAT	VERT	AX	LAT	VERT	AX	LAT	VERT	AX
207 C4000	1008	840	1730	1530	1275	2400	2040	1700	3020	2400	2000	3700	2640	2200	4320
208 C4100	2016	1680	2900	3060	2550	3900	4080	3400	4850	4800	4000	5850	5280	4400	6800
209 C4200	3000	2500	4100	-			6120	5100	6675	7200	6000	8000	7920	6600	9300
248 C4300	-			-			-			8904	7420	11130	-		

5 — 1-1/2"=1'-0"
207 209 208 248 HPS / LPS / BFW PIPE ANCHOR

6 — 1"=1'-0"
211 HPS / LPS GUIDE SUPPORT

REGISTERED PROFESSIONAL ENGINEER MICHAEL S. CALLAGAN No. M21188 MECHANICAL STATE OF CALIFORNIA

ZONE	LETTER	DESCRIPTION	DRAWN	DATE	APPRVD

REVISIONS

DRAWN R.CLARK	DATE
DESIGNED J. VAN CORBACH	DATE
CHECKED A.FIROUZI	DATE
A&E PM G.HITE	DATE
NASA PM W.LEE	DATE
REQUESTER G.RAICHE	DATE
R&QA	DATE
SAFETY/PSM D.FRASER	DATE
SUPERVISOR S.FRANKEL	DATE

Ames Research Center
Moffett Field, California

REPLACE ARC JET COMPLEX SVS BOILER
MECHANICAL

PIPE SUPPORT DETAILS

SIZE	CAGE CODE		REV
D	25307	A 231-1300-M501	
SCALE AS SHOWN		INDEX	SHEET OF

FILE NAME: 231-M501.DWG 12/12/12

DWG: R:\234\R0212032.0001 (KX11027) Replace Arc-Jet Complex SVS Boiler Final Design\500 CAD\MiSheet\231-M501.dwg Version: 18.1s (LMS Tech) User: jjho
DATE: Feb 01, 2013 - 12:49:40 pm

DWG NO. A231-1300-M502 | SH. | REV

SHEET NOTES

1. ALL WELDED ATTACHMENTS TO PIPE REQUIRE AN ASME B31 WELD AND TEST REQUIREMENTS.
2. FOR W BEAM SIZES SEE STRUCTURAL DRAWINGS
3. FOR ADDITIONAL HPS PIPE SUPPORTS SEE SHEETS M501 & M510.
4. ALL VIEWS ARE ELEVATIONS UNLESS OTHERWISE NOTED.
5. ALL BASE PLATES SHALL HAVE STANDARD HOLES (1/16" LARGER THAN BOLT SIZE) OTHERWISE PROVIDE WASHER PLATE WITH 3/16" FILLED WELD ALL AROUND.

KEY NOTES

1. NOT USED.

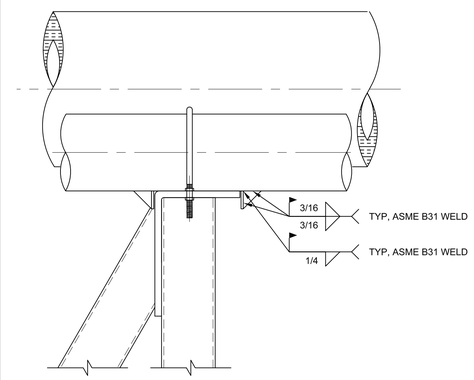

B SECTION
SCALE: 1-1/2" = 1'-0"

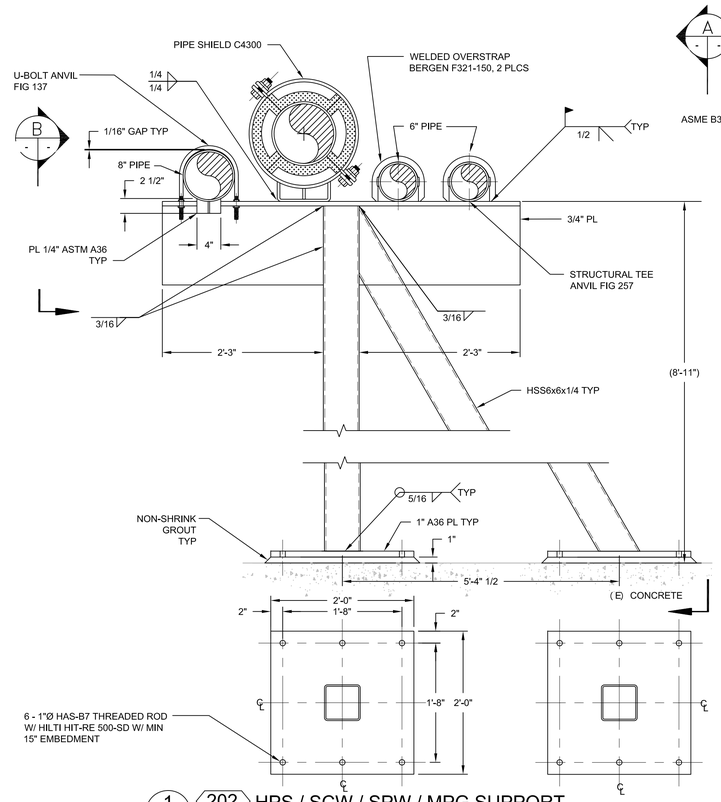

1 202 HPS / SCW / SPW / MPG SUPPORT
SCALE: 1"=1'-0"

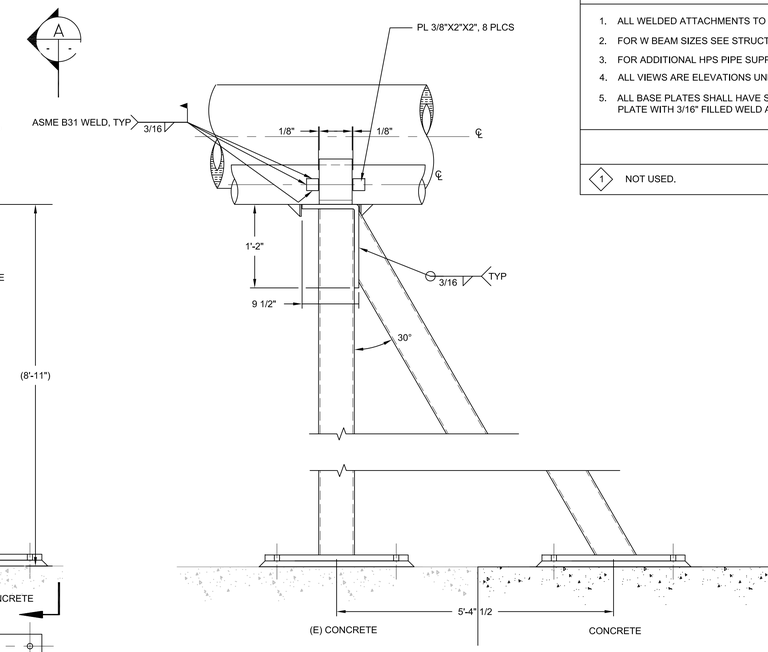

A SECTION
SCALE: 1" = 1'-0"

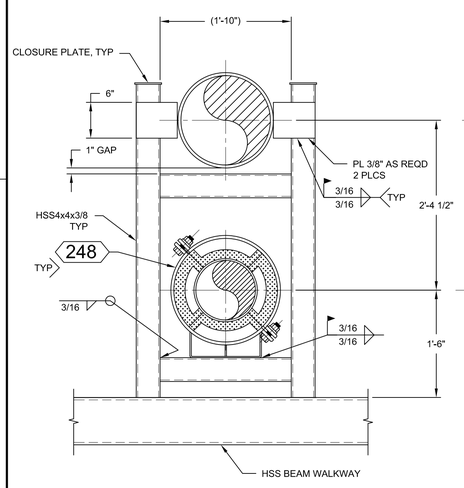

C SECTION
SCALE: 1-1/2" = 1'-0"

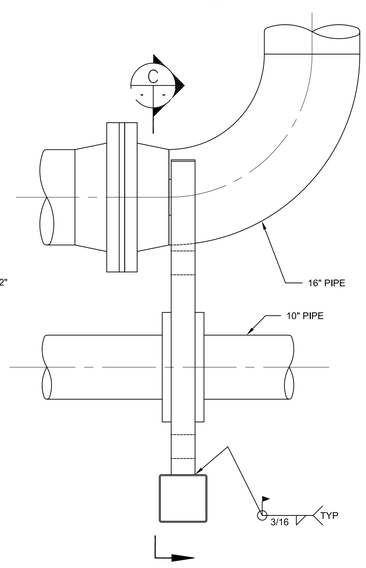

2 232 HPS SUPPORT
SCALE: 1"=1'-0"

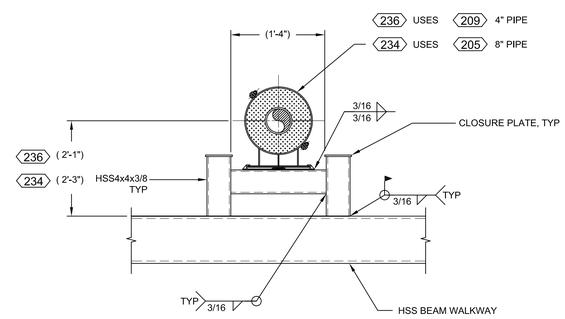

3 236 LPS SUPPORT
234 LPS SUPPORT
SCALE: 1"=1'-0"

ZONE	LETTER	DESCRIPTION	DRAWN	DATE	APPRVD

REVISIONS

DRAWN R.CLARK	DATE
DESIGNED J. VAN CORBACH	DATE
CHECKED A.FIROUZI	DATE
A&E PM G.HITE	DATE
NASA PM W.LEE	DATE
REQUESTER G.RAICHE	DATE
R&QA	DATE
SAFETY/PSM D.FRASER	DATE
SUPERVISOR S.FRANKEL	DATE

REGISTERED PROFESSIONAL ENGINEER MICHAEL S. CALLAHAN No. M21188 MECHANICAL STATE OF CALIFORNIA

Ames Research Center
Moffett Field, California

REPLACE ARC JET COMPLEX SVS BOILER
MECHANICAL

PIPE SUPPORT DETAILS

SIZE	CAGE CODE		REV
D	25307	A 231-1300-M502	
SCALE AS SHOWN		INDEX	SHEET OF

FILE NAME: 231-M502.DWG 12/12/12

DWG: R:\234\A60212\32.0001 (K11027) Replace Arc Jet Complex SVS Boiler Final Design\500 CAD\M\Sheet\231-M502.dwg Version: 18.1s (LMS Tech) User: jjho
DATE: Feb 01, 2013 - 12:49:45 pm

DWG NO.	SH.	REV
A231-1300-M504		

SHEET NOTES

1. ALL WELDED ATTACHMENTS TO PIPE REQUIRE AN ASME B31 WELD AND TEST REQUIREMENTS.
2. FOR W BEAM SIZES SEE STRUCTURAL DRAWINGS
3. FOR ADDITIONAL IBD/CBD PIPE SUPPORTS SEE SHEETS M505, 506, 507 & M511.
4. ALL VIEWS ARE ELEVATIONS UNLESS OTHERWISE NOTED.

KEY NOTES

1. PIPE INSULATION TO BE INSTALLED TO PROVIDE FOR THERMAL GROWTH OF PIPE WITHOUT DAMAGE TO THE INSULATION. MINIMUM 2" CLEARANCE OF EACH SIDE OF THE RESTRAINT.

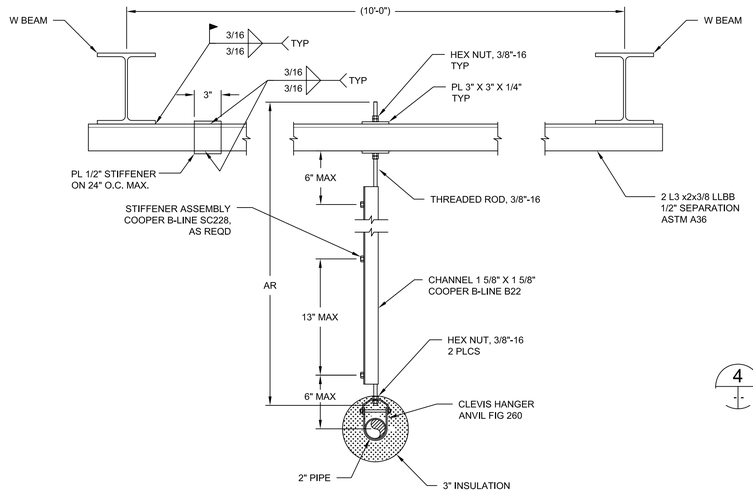

3 219 IBD / CBD HANGER SUPPORT
1-1/2"=1'-0"

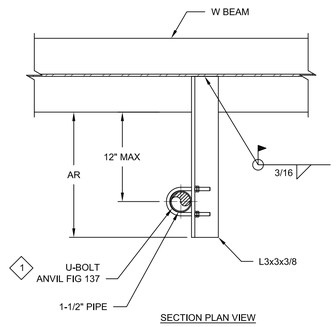

4 226 SCW / SPW SUPPORT - PLAN VIEW
1-1/2"=1'-0"

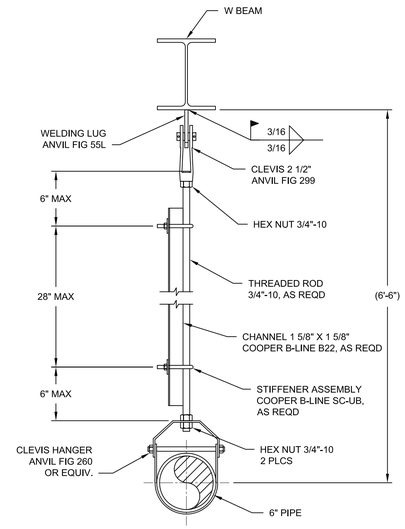

6 263 MU SUPPORT
1-1/2"=1'-0"

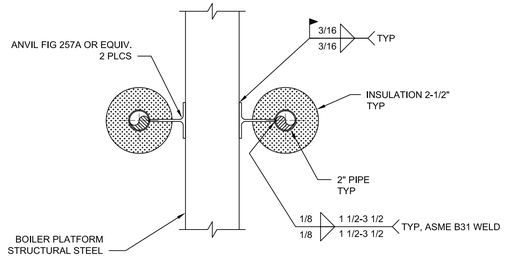

2 222 IBD / CBD ANCHOR SUPPORT
1-1/2"=1'-0"

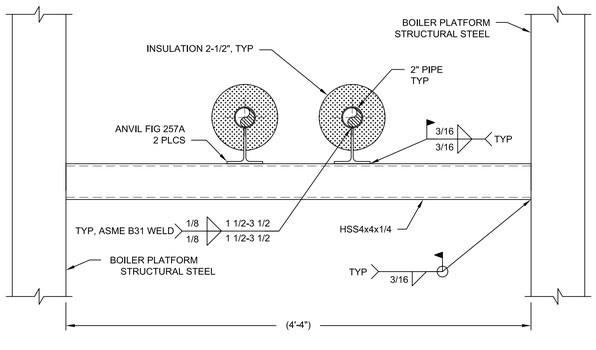

1 220 IBD / CBD ANCHOR SUPPORT
1-1/2"=1'-0"

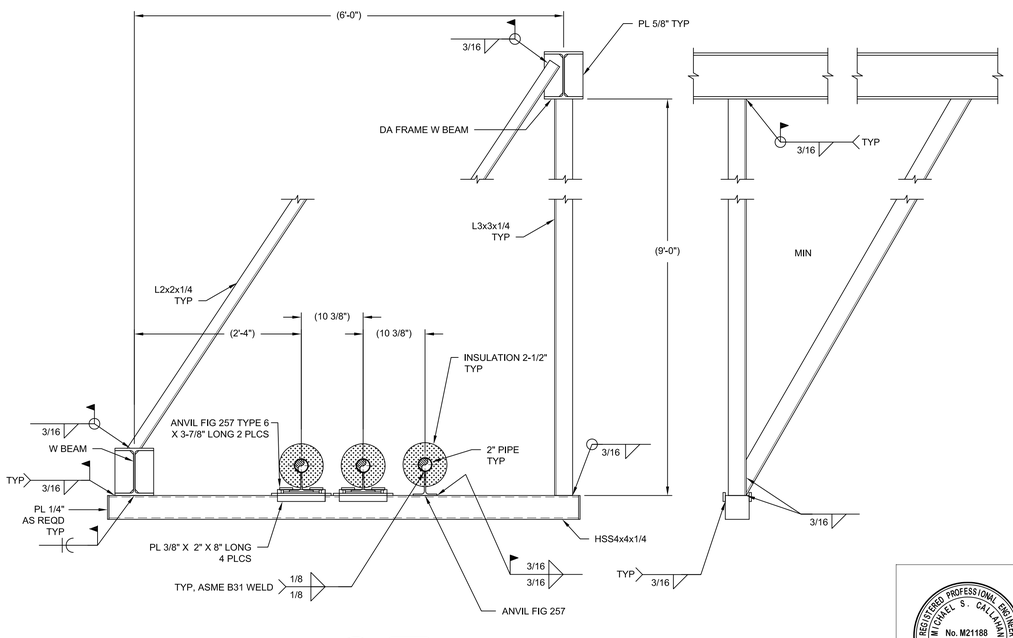

5 216 CBD SUPPORT
1"=1'-0"

REGISTERED PROFESSIONAL ENGINEER MICHAEL S. CALLIAN No. M21188 MECHANICAL STATE OF CALIFORNIA

ZONE	LETTER	DESCRIPTION	DRAWN	DATE	APPRVD

REVISIONS

DRAWN R.CLARK	DATE
DESIGNED J. VAN CORBACH	DATE
CHECKED A.FIROUZI	DATE
A&E PM G.HITE	DATE
NASA PM W.LEE	DATE
REQUESTER G.RAICHE	DATE
R&QA	DATE
SAFETY/PSM D.FRASER	DATE
SUPERVISOR S.FRANKEL	DATE

Ames Research Center
Moffett Field, California

REPLACE ARC JET COMPLEX SVS BOILER
MECHANICAL

PIPE SUPPORT DETAILS

SIZE	CAGE CODE		REV
D	25307	A 231-1300-M504	
SCALE AS SHOWN		INDEX	SHEET OF

FILE NAME: 231-M504.DWG 12/12/12

DWG: R:\234\A\60212\932.0001 (KK11027) Replace Arc-Jet Complex SVS Boiler Final Design\500 CAD\MiSheet\231-M504.dwg Version: 18.1s (LMS Tech) User: jjlho
DATE: Feb 01, 2013 - 12:49:49 pm

DWG NO.	SH.	REV
A231-1300-M505		

SHEET NOTES

1. ALL WELDED ATTACHMENTS TO PIPE REQUIRE AN ASME B31 WELD AND TEST REQUIREMENTS.
2. FOR W BEAM SIZES SEE STRUCTURAL DRAWINGS
3. FOR ADDITIONAL IBD/CBD PIPE SUPPORTS SEE SHEETS M504, 506, 507 & M511.
4. ALL VIEWS ARE ELEVATIONS UNLESS OTHERWISE NOTED.
5. ALL BASE PLATES SHALL HAVE STANDARD HOLES (1/16" LARGER THAN BOLT SIZE) OTHERWISE PROVIDE WASHER PLATE WITH 3/16" FILLED WELD ALL AROUND.

KEY NOTES

1. PIPE INSULATION TO BE INSTALLED TO PROVIDE FOR THERMAL GROWTH OF PIPE WITHOUT DAMAGE TO THE INSULATION. MINIMUM 2" CLEARANCE OF EACH SIDE OF THE RESTRAINT.

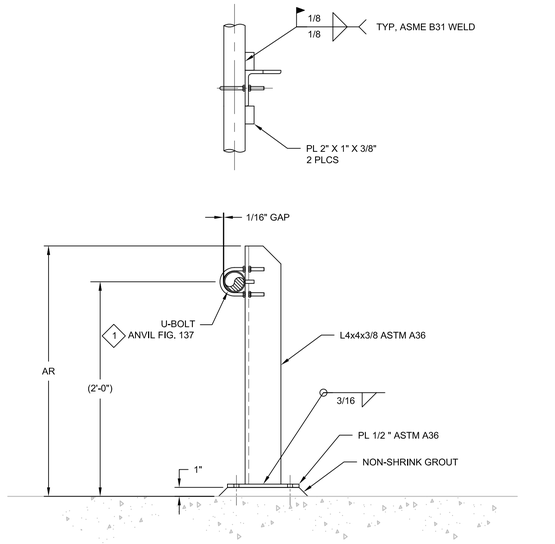

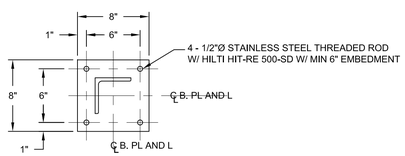

1 221 CBD SUPPORT
SCALE: 1-1/2"=1'-0"

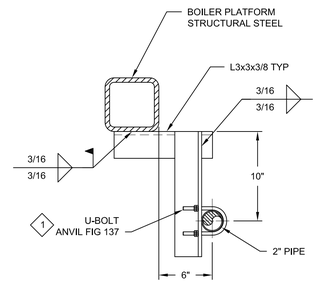

5 223 CBD SUPPORT
SCALE: 1-1/2"=1'-0"

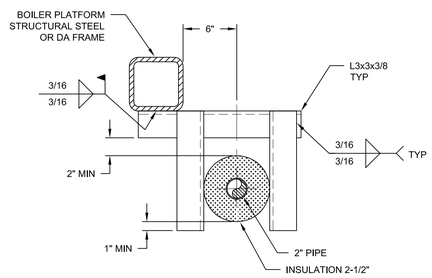

6 224 CBD SUPPORT
SCALE: 1 1/2"=1'-0"

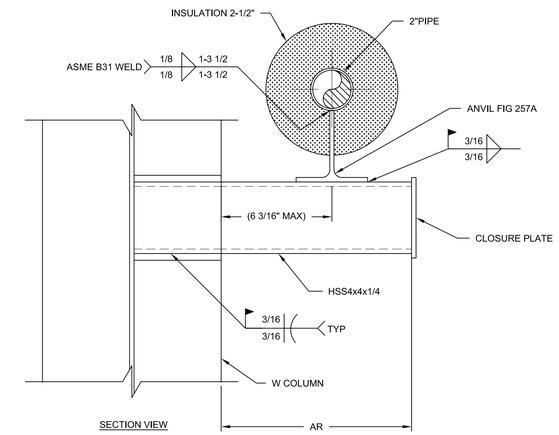

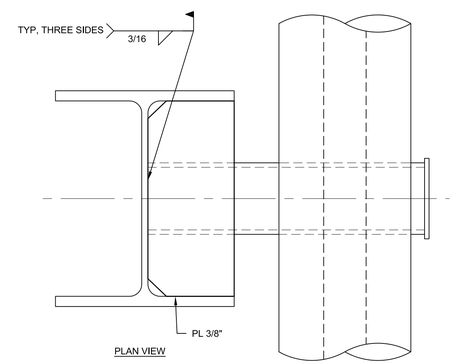

3 214 CBD SUPPORT
SCALE: 3"=1'-0"

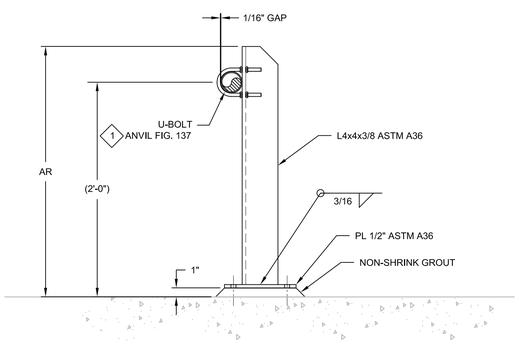

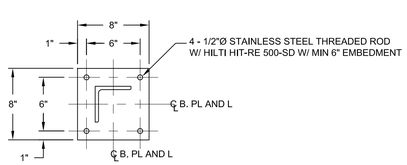

2 212 CBD SUPPORT
SCALE: 1-1/2"=1'-0"

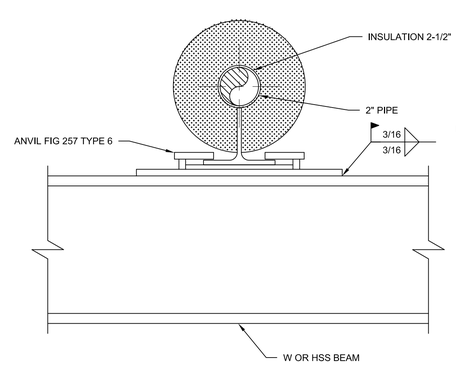

4 213 IBD / CBD SUPPORT
SCALE: 3"=1'-0"

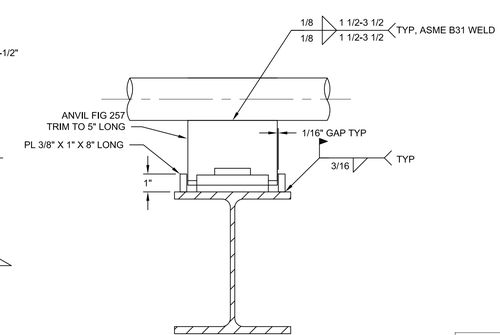

ZONE	LETTER	DESCRIPTION	DRAWN	DATE	APPRVD

REVISIONS

DRAWN R.CLARK	DATE
DESIGNED J. VAN CORBACH	DATE
CHECKED A.FIROUZI	DATE
A&E PM G.HITE	DATE
NASA PM W.LEE	DATE
REQUESTER G.RAICHE	DATE
R&QA	DATE
SAFETY/PSM D.FRASER	DATE
SUPERVISOR S.FRANKEL	DATE

REGISTERED PROFESSIONAL ENGINEER MICHAEL S. CALLAHAN No. M21188 MECHANICAL STATE OF CALIFORNIA

Ames Research Center
Moffett Field, California

REPLACE ARC JET COMPLEX SVS BOILER
MECHANICAL

PIPE SUPPORT DETAILS

SIZE	CAGE CODE		REV
D	25307	A 231-1300-M505	
SCALE AS SHOWN		INDEX	SHEET OF

FILE NAME: 231-M505.DWG 12/12/12

DWG: R:\234A\60212032\0001 (K11027) Replace Arcject Complex SVS Boiler Final Design\500 CAD\M\Sheet\231-M505.dwg Version: 18.1s (LMS Tech) User: jjlro
DATE: Feb 01, 2013 - 12:46:53 pm

DWG NO.	SH.	REV
A231-1300-M506		

SHEET NOTES

1. ALL WELDED ATTACHMENTS TO PIPE REQUIRE AN ASME B31 WELD AND TEST REQUIREMENTS.
2. FOR W BEAM SIZES SEE STRUCTURAL DRAWINGS
3. FOR ADDITIONAL IBD/CBD PIPE SUPPORTS SEE SHEETS M504, 505, 507 & M511.
4. ALL VIEWS ARE ELEVATIONS UNLESS OTHERWISE NOTED.

KEY NOTES

1. NOT USED.

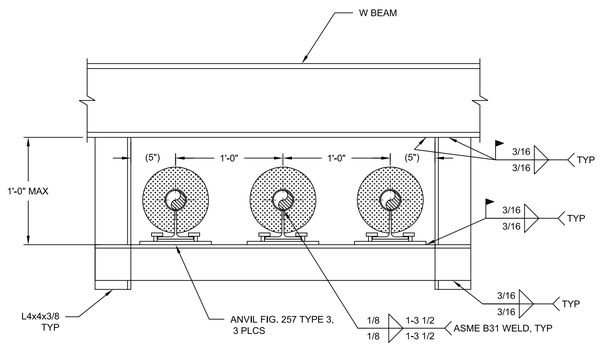

NOTE: SUPPORT CAN BE USED FOR DOUBLE PIPE BY SHORTENING HORIZONTAL ANGLE.

1 227 CBD SUPPORT
SCALE: 1-1/2"=1'-0"

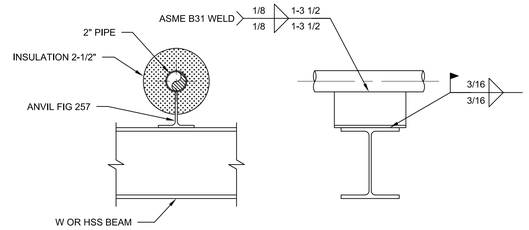

3 228 CBD SUPPORT
SCALE: 1-1/2"=1'-0"

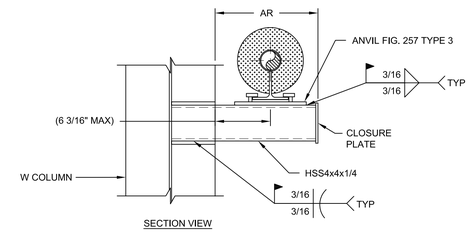

SECTION VIEW

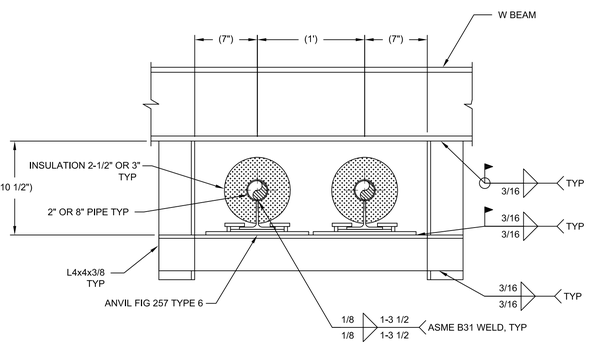

NOTE: SUPPORT CAN BE USED FOR SINGLE PIPE BY SHORTENING HORIZONTAL ANGLE.

2 229 HPS / CBD SUPPORT
SCALE: 1-1/2"=1'-0"

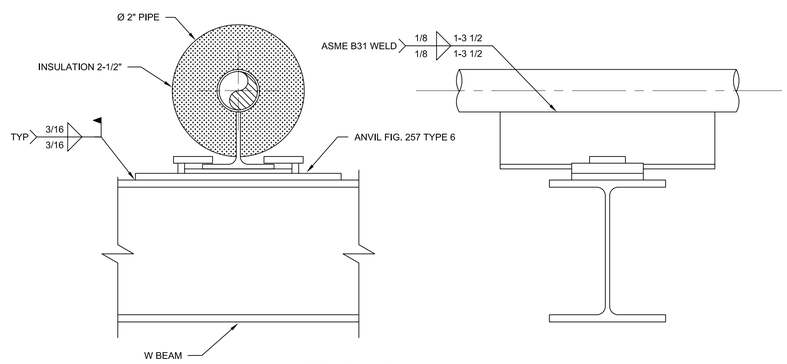

7 225 CBD SUPPORT
SCALE: 3"=1'-0"

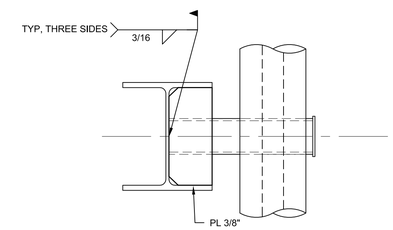

PLAN VIEW

6 215 CBD SUPPORT
SCALE: 1-1/2"=1'-0"

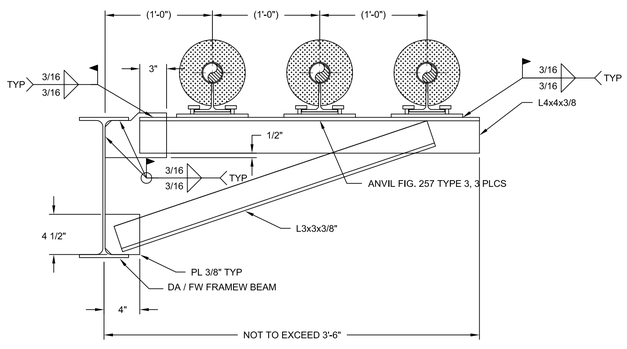

5 230 IBD / CBD SUPPORT
SCALE: 1-1/2"=1'-0"

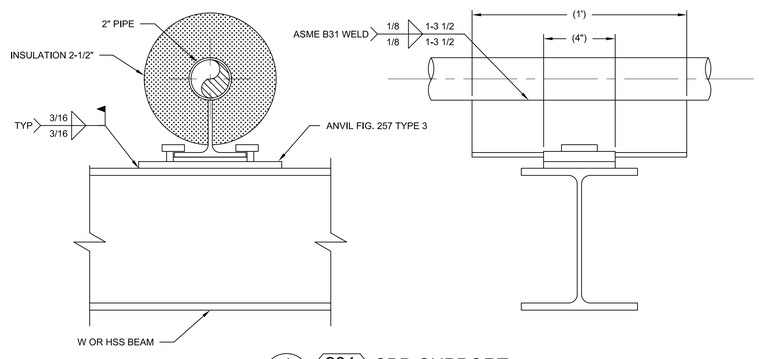

4 231 CBD SUPPORT
SCALE: 3"=1'-0"

ZONE	LETTER	DESCRIPTION	DRAWN	DATE	APPRVD

REVISIONS

DRAWN R.CLARK	DATE
DESIGNED J. VAN CORBACH	DATE
CHECKED A. FIROUZI	DATE
A&E PM G.HITE	DATE
NASA PM W.LEE	DATE
REQUESTER G.RAICHE	DATE
R&QA	DATE
SAFETY/PSM D.FRASER	DATE
SUPERVISOR S.FRANKEL	DATE

REGISTERED PROFESSIONAL ENGINEER MICHAEL S. CALLAHAN No. M21188 MECHANICAL STATE OF CALIFORNIA

Ames Research Center
Moffett Field, California

REPLACE ARC JET COMPLEX SVS BOILER
MECHANICAL

PIPE SUPPORT DETAILS

SIZE	CAGE CODE		REV
D	25307	A 231-1300-M506	
SCALE AS SHOWN		INDEX	SHEET OF

FILE NAME: 231-M506.DWG 12/12/12

DWG: R:\234A\80231202\0001 (K11027) Replace ArcJect Complex SVS Boiler Final Design\500 CAD\M\Sheet\231-M506.dwg Version: 18.1s (LMS Tech) User:jlho
DATE: Feb 01, 2013 - 12:49:58 pm

DWG NO.	SH.	REV
A231-1300-M507		

SHEET NOTES

1. FOR W BEAM SIZES SEE STRUCTURAL DRAWINGS
2. FOR ADDITIONAL IBD/CBD PIPE SUPPORTS SEE SHEETS M504, 505, 506 & M511.
3. ALL VIEWS ARE ELEVATIONS UNLESS OTHERWISE NOTED.

KEY NOTES

1. PIPE INSULATION TO BE INSTALLED TO PROVIDE FOR THERMAL GROWTH OF PIPE WITHOUT DAMAGE TO THE INSULATION. MINIMUM 2" CLEARANCE OF EACH SIDE OF THE RESTRAINT.

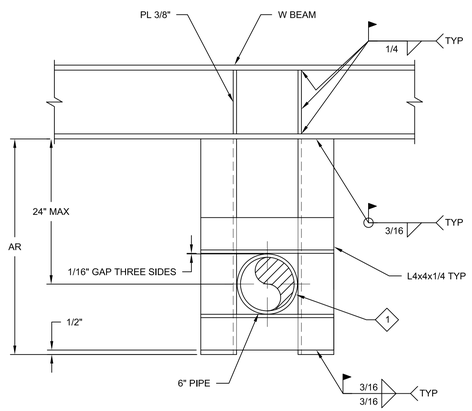

1 266 SCW / SPW SUPPORT
1-1/2"=1'-0"

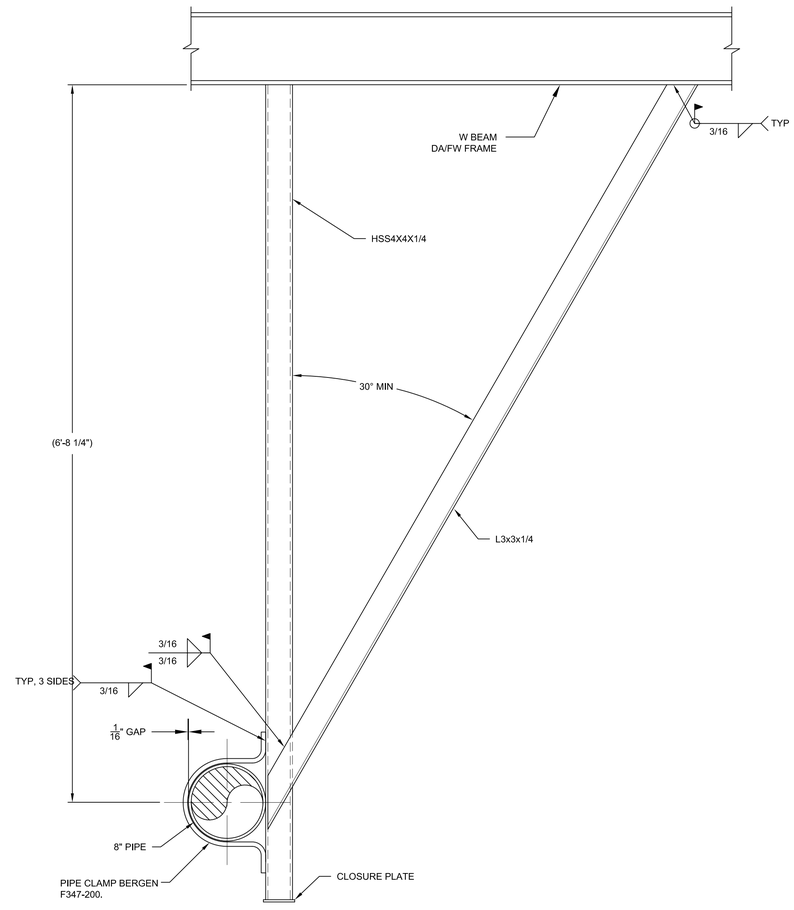

2 258 MPG SUPPORT
1-1/2"=1'-0"

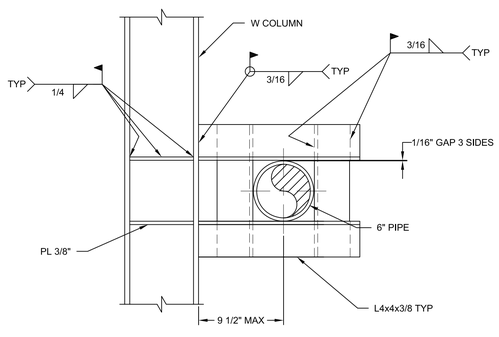

PRIMARY MOUNTING

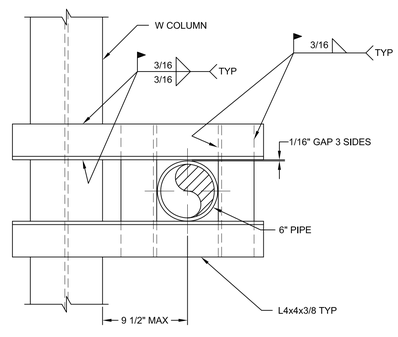

ALTERNATE MOUNTING

3 240 SCW / SPW GUIDE SUPPORT
1-1/2"=1'-0"

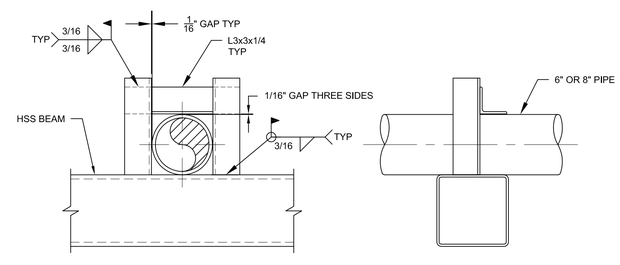

4 259 MPG PIPE SUPPORT
1-1/2"=1'-0"

ZONE	LETTER	DESCRIPTION	DRAWN	DATE	APPRVD

REVISIONS

DRAWN R.CLARK	DATE
DESIGNED J. VAN CORBACH	DATE
CHECKED A.FIROUZI	DATE
A&E PM G.HITE	DATE
NASA PM W.LEE	DATE
REQUESTER G.RAICHE	DATE
R&QA	DATE
SAFETY/PSM D.FRASER	DATE
SUPERVISOR S.FRANKEL	DATE

REGISTERED PROFESSIONAL ENGINEER MICHAEL S. CALLAHAN No. M21188 MECHANICAL STATE OF CALIFORNIA

Ames Research Center
Moffett Field, California

REPLACE ARC JET COMPLEX SVS BOILER
MECHANICAL

PIPE SUPPORT DETAILS

SIZE	CAGE CODE		REV
D	25307	A 231-1300-M507	
SCALE AS SHOWN		INDEX	SHEET OF

FILE NAME: 231-M507.DWG 12/12/12

DWG: R:\234\60212932.0001 (K11027) Replace Arcjet Complex SVS Boiler Final Design\500 CAD\MSheet\231-M507.dwg Version: 18.1s (LMS Tech) User: jlho
DATE: Feb 01, 2013 - 12:50:02 pm

DWG NO. A231-1300-M508 | SH. | REV

SHEET NOTES

1. ALL VIEWS ARE ELEVATIONS UNLESS OTHERWISE NOTED.
2. ALL BASE PLATES SHALL HAVE STANDARD HOLES (1/16" LARGER THAN BOLT SIZE) OTHERWISE PROVIDE WASHER PLATE WITH 3/16" FILLED WELD ALL AROUND.

KEY NOTES

1. PIPE INSULATION TO BE INSTALLED TO PROVIDE FOR THERMAL GROWTH OF PIPE WITHOUT DAMAGE TO THE INSULATION. MINIMUM 2" CLEARANCE OF EACH SIDE OF THE RESTRAINT.

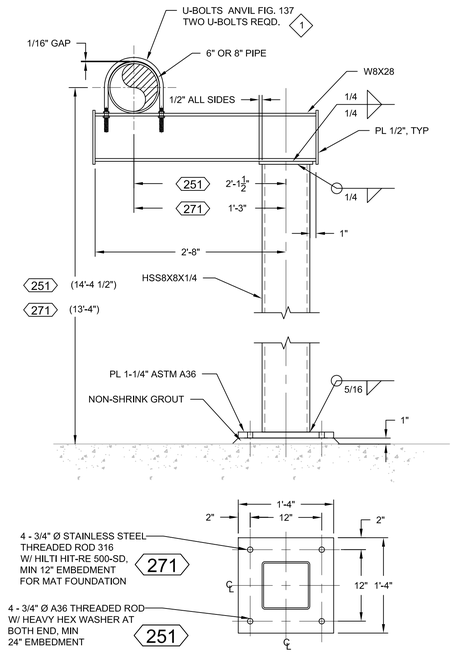

271 SCW / SPW SUPPORT
251 MPG SUPPORT
1 1"=1'-0"

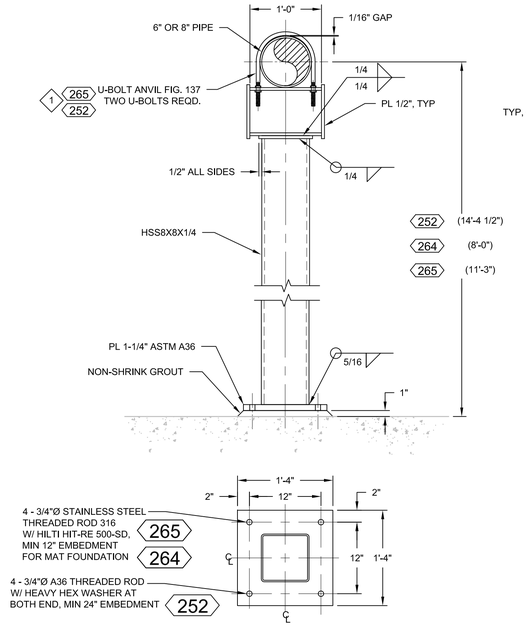

265 SCW / SPW SUPPORT
264 SCW / SPW SUPPORT
252 MPG SUPPORT
2 1"=1'-0"

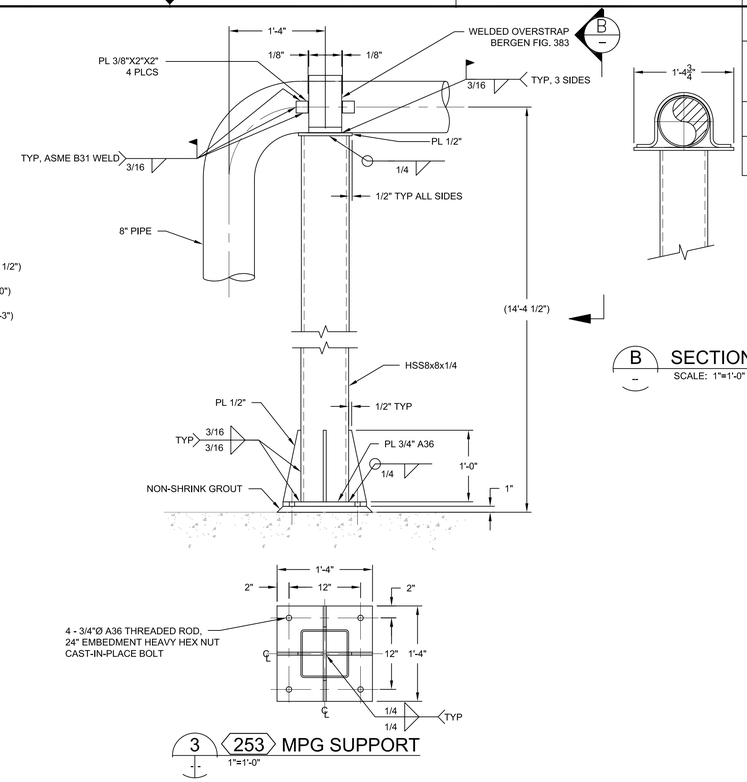

253 MPG SUPPORT
3 1"=1'-0"

B SECTION
SCALE: 1"=1'-0"

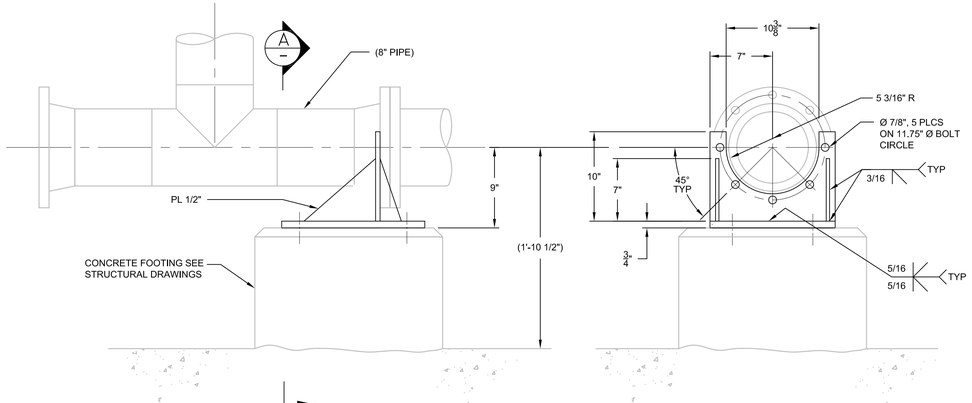

A SECTION
SCALE: 1-1/2"=1'-0"

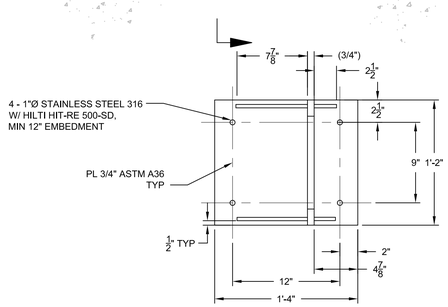

255 MPG SUPPORT
4 1-1/2"=1'-0"

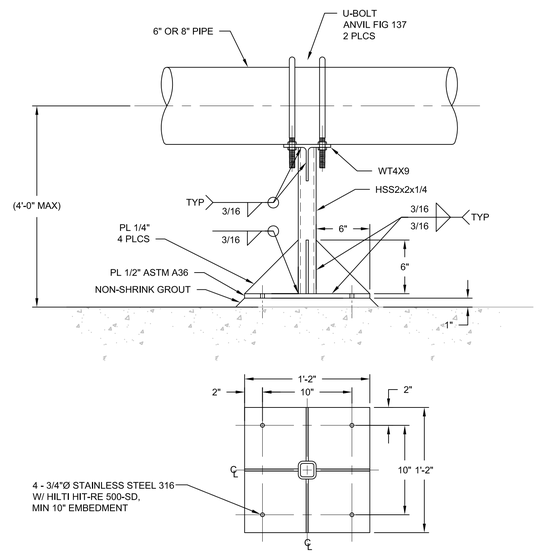

256 MPG SUPPORT
5 1-1/2"=1'-0"

ZONE	LETTER	DESCRIPTION	DRAWN	DATE	APPRVD
		REVISIONS			

DRAWN R.CLARK	DATE
DESIGNED J. VAN CORBACH	DATE
CHECKED A.FIROUZI	DATE
A&E PM G.HITE	DATE
NASA PM W.LEE	DATE
REQUESTER G.RAICHE	DATE
R&QA	DATE
SAFETY/PSM D.FRASER	DATE
SUPERVISOR S.FRANKEL	DATE

REGISTERED PROFESSIONAL ENGINEER MICHAEL S. CALLAHAN No. M21188 MECHANICAL STATE OF CALIFORNIA

Ames Research Center
Moffett Field, California

REPLACE ARC JET COMPLEX SVS BOILER
MECHANICAL

PIPE SUPPORT DETAILS

SIZE	CAGE CODE		REV
D	25307	A 231-1300-M508	
SCALE AS SHOWN	INDEX	SHEET OF	

FILE NAME: 231-M508.DWG 12/12/12

DWG: R:\234A\60212032.0001 (K11027) Replace Arcjet Complex SVS Boiler Final Design\500 CAD\MiSheet\231-M508.dwg Version: 18.1s (LMS Tech) User: jjlro
DATE: Feb 01, 2013 - 12:50:05 pm

DWG NO.	SH.	REV
A231-1300-M509		

SHEET NOTES

1. ALL WELDED ATTACHMENTS TO PIPE REQUIRE AN ASME B31 WELD AND TEST REQUIREMENTS.
2. FOR W BEAM SIZES SEE STRUCTURAL DRAWINGS
3. ALL VIEWS ARE ELEVATIONS UNLESS OTHERWISE NOTED.
4. ALL BASE PLATES SHALL HAVE STANDARD HOLES (1/16" LARGER THAN BOLT SIZE) OTHERWISE PROVIDE WASHER PLATE WITH 3/16" FILLED WELD ALL AROUND.

KEY NOTES

1. PIPE INSULATION TO BE INSTALLED TO PROVIDE FOR THERMAL GROWTH OF PIPE WITHOUT DAMAGE TO THE INSULATION. MINIMUM 2" CLEARANCE OF EACH SIDE OF THE RESTRAINT.

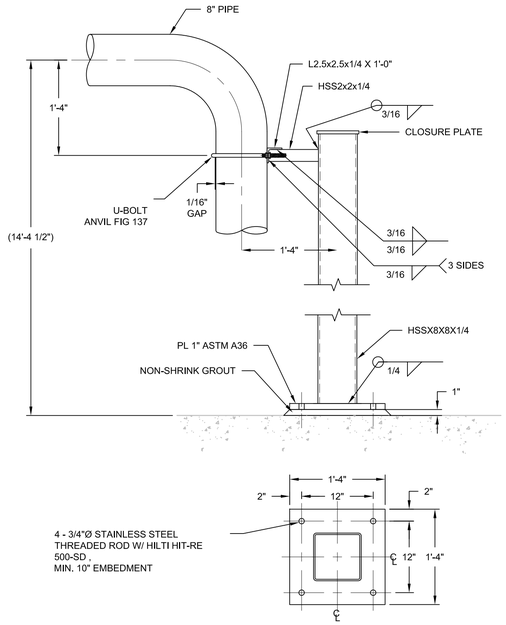

1 / 254 MPG SUPPORT
1"=1'-0"

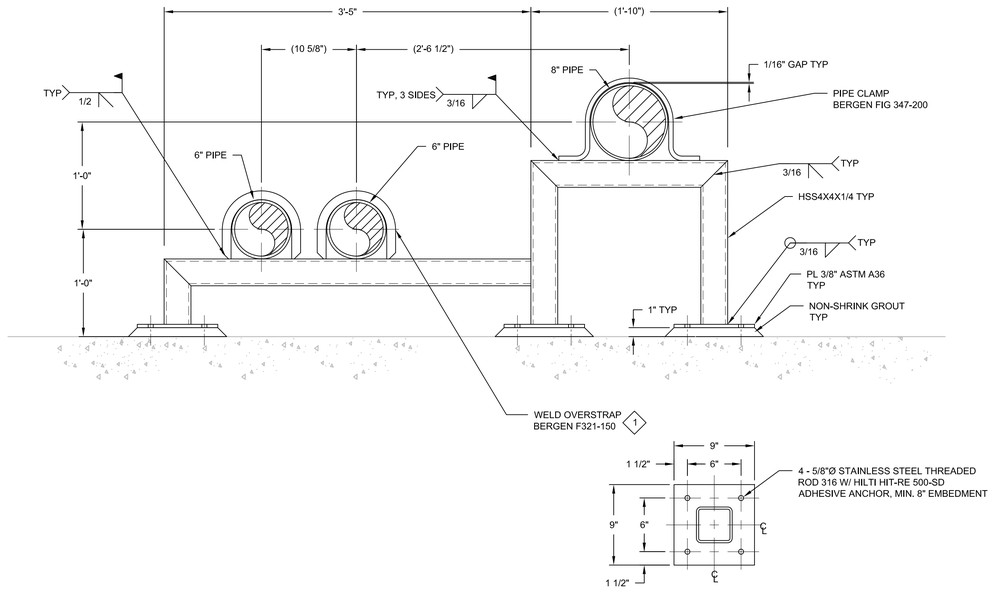

3 / 261 MPG / SCW / SPW PIPE SUPPORT
1-1/2"=1'-0"

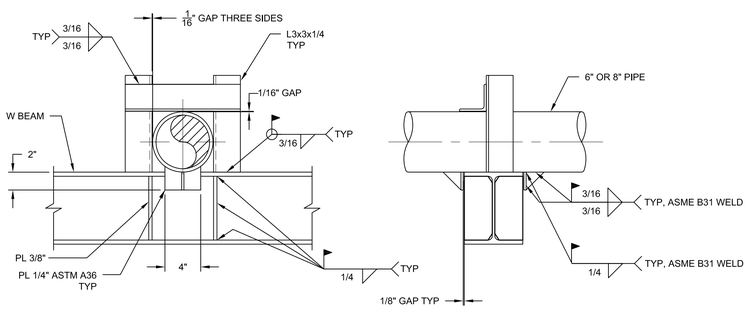

2 / 260 MPG PIPE SUPPORT
1-1/2"=1'-0"

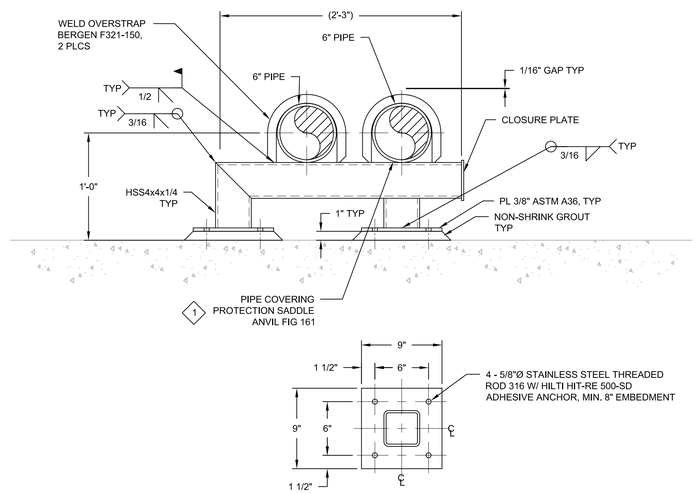

4 / 270 SCW / SPW PIPE SUPPORT
1-1/2"=1'-0"

ZONE	LETTER	DESCRIPTION	DRAWN	DATE	APPRVD

REVISIONS

DRAWN R.CLARK	DATE
DESIGNED J. VAN CORBACH	DATE
CHECKED A.FIROUZI	DATE
A&E PM G.HITE	DATE
NASA PM W.LEE	DATE
REQUESTER G.RAICHE	DATE
R&QA	DATE
SAFETY/PSM D.FRASER	DATE
SUPERVISOR S.FRANKEL	DATE

REGISTERED PROFESSIONAL ENGINEER
MICHAEL S. CALLAHAN
No. M21188
MECHANICAL
STATE OF CALIFORNIA

Ames Research Center
Moffett Field, California

REPLACE ARC JET COMPLEX SVS BOILER
MECHANICAL

PIPE SUPPORT DETAILS

SIZE	CAGE CODE		REV
D	25307	A 231-1300-M509	
SCALE AS SHOWN		INDEX	SHEET OF

FILE NAME:
231-M509.DWG
12/12/12

DWG: R:\234A\80212932.0001 (K11027) Replace Arc Jet Complex SVS Boiler Final Design\500 CAD\MiSheet\231-M509.dwg Version: 18.1s (LMS Tech) User: jjlho
DATE: Feb 01, 2013 - 12:50:10 pm

DWG NO.	SH.	REV
A231-1300-M510		

SHEET NOTES

1. ALL WELDED ATTACHMENTS TO PIPE REQUIRE A ASME B31 WELD AND TEST REQUIREMENTS.
2. FOR W BEAM SIZES SEE STRUCTURAL DRAWINGS
3. FOR ADDITIONAL HPS PIPE SUPPORTS SEE SHEETS M501 & M502.
4. ALL VIEWS ARE ELEVATIONS UNLESS OTHERWISE NOTED.

KEY NOTES

1. PIPE INSULATION TO BE INSTALLED TO PROVIDE FOR THERMAL GROWTH OF PIPE WITHOUT DAMAGE TO THE INSULATION. MINIMUM 2" CLEARANCE OF EACH SIDE OF THE RESTRAINT.

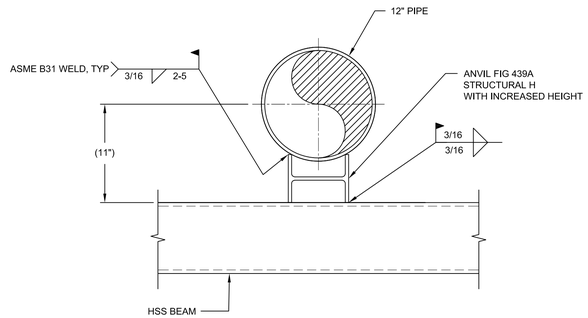

1 241 HPS SUPPORT
1-1/2"=1'-0"

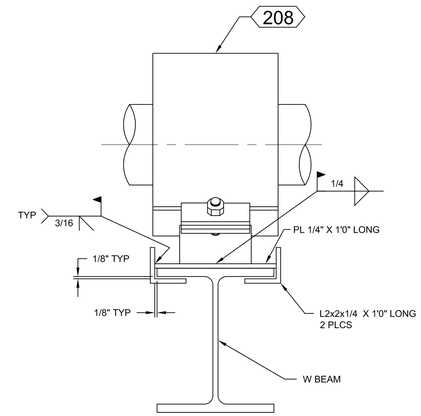

3 237 HPS SUPPORT
3"=1'-0"

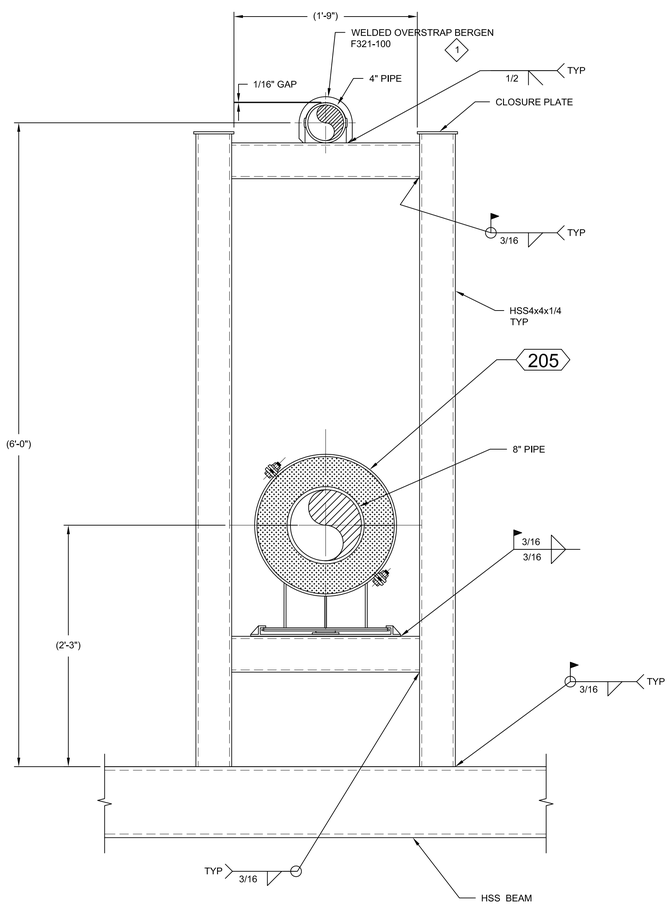

2 235 LPS SUPPORT
1-1/2"=1'-0"

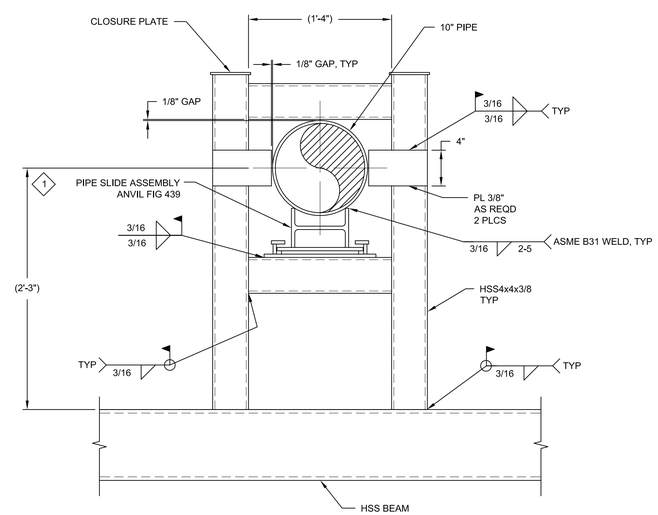

4 238 HPS SUPPORT
1-1/2"=1'-0"

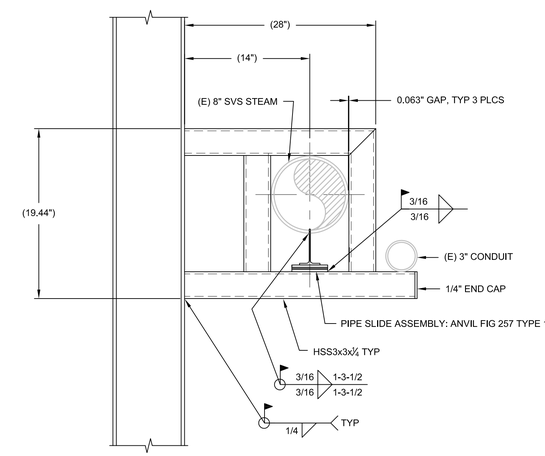

5 250 SVS SUPPORT
1-1/2"=1'-0"

ZONE	LETTER	DESCRIPTION	DRAWN	DATE	APPRVD

REVISIONS

DRAWN R.CLARK	DATE
DESIGNED J. VAN CORBACH	DATE
CHECKED A.FIROUZI	DATE
A&E PM G.HTE	DATE
NASA PM W.LEE	DATE
REQUESTER G.RAICHE	DATE
R&QA	DATE
SAFETY/PSM D.FRASER	DATE
SUPERVISOR S.FRANKEL	DATE

REGISTERED PROFESSIONAL ENGINEER MICHAEL S. CALLAHAN No. M21188 MECHANICAL STATE OF CALIFORNIA

Ames Research Center
Moffett Field, California

REPLACE ARC JET COMPLEX SVS BOILER
MECHANICAL

PIPE SUPPORT DETAILS

SIZE	CAGE CODE		REV
D	25307	A 231-1300-M510	
SCALE AS SHOWN		INDEX	SHEET OF

FILE NAME: 231-M510.DWG 12/12/12

DWG: R:\234A\80212932.0001 (K11027) Replace Arc Jet Complex SVS Boiler Final Design\500 CAD\M\Sheet\231-M510.dwg Version: 18.1s (LMS Tech) User: jjlho
DATE: Feb 01, 2013 - 12:50:13 pm

DWG NO.	SH.	REV
A231-1300-M511		

SHEET NOTES

1. ALL WELDED ATTACHMENTS TO PIPE REQUIRE AN ASME B31 WELD AND TEST REQUIREMENTS.
2. FOR W BEAM SIZES SEE STRUCTURAL DRAWINGS
3. FOR ADDITIONAL IBD/CBD PIPE SUPPORTS SEE SHEETS M504, 505, 506 & M507.
4. ALL VIEWS ARE ELEVATIONS UNLESS OTHERWISE NOTED.
5. ALL BASE PLATES SHALL HAVE STANDARD HOLES (1/16" LARGER THAN BOLT SIZE) OTHERWISE PROVIDE WASHER PLATE WITH 3/16" FILLED WELD ALL AROUND.

KEY NOTES

1. CAN BE USED FOR SINGLE PIPE OR DOUBLE PIPE.
2. PIPE INSULATION TO BE INSTALLED TO PROVIDE FOR THERMAL GROWTH OF PIPE WITHOUT DAMAGE TO THE INSULATION. MINIMUM 2" CLEARANCE OF EACH SIDE OF THE RESTRAINT.

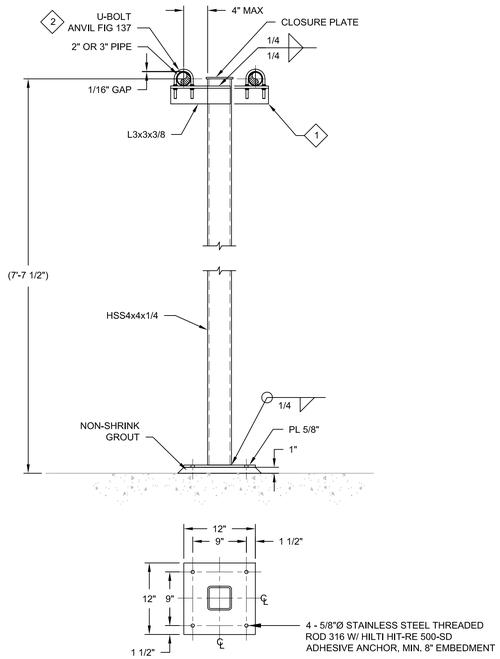

1 218 CBD / BFR SUPPORT
1"=1'-0"

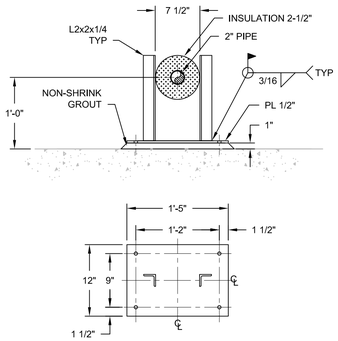

3 245 CBD SUPPORT
1"=1'-0"

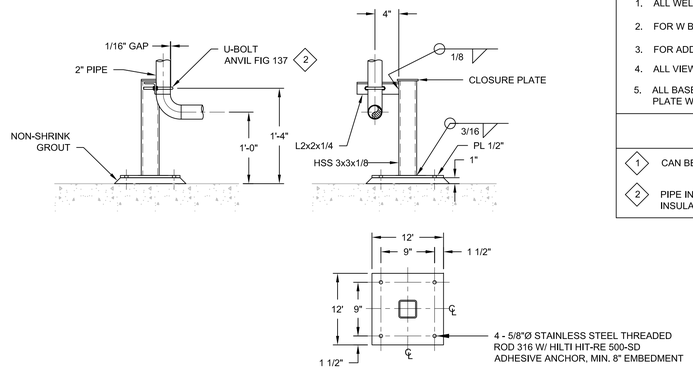

6 243 CBD SUPPORT
1"=1'-0"

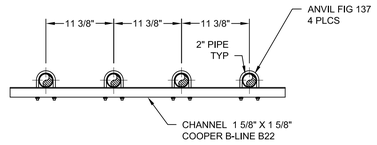

4 246 CBD SUPPORT
1"=1'-0"

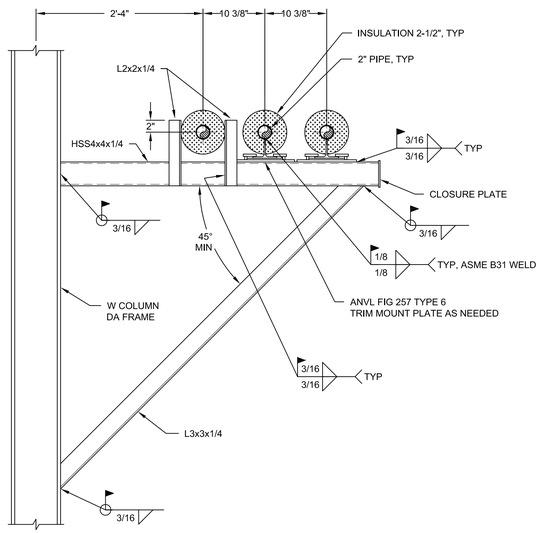

2 217 CBD SUPPORT
1"=1'-0"

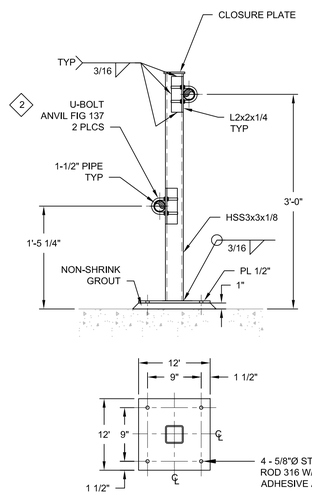

5 244 CBD SUPPORT
1"=1'-0"

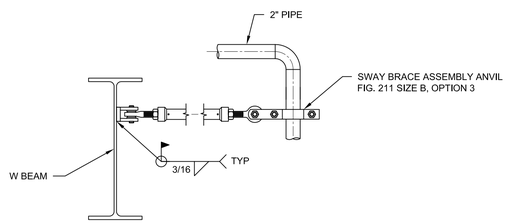

7 247 CBD SUPPORT
1"=1'-0"

ZONE	LETTER	DESCRIPTION	DRAWN	DATE	APPRVD

REVISIONS

DRAWN R.CLARK	DATE
DESIGNED J. VAN CORBACH	DATE
CHECKED A.FIROUZI	DATE
A&E PM G.HITE	DATE
NASA PM W.LEE	DATE
REQUESTER G.RAICHE	DATE
R&QA	DATE
SAFETY/PSM D.FRASER	DATE
SUPERVISOR S.FRANKEL	DATE

REGISTERED PROFESSIONAL ENGINEER MICHAEL S. CALLAHAN No. M21188 MECHANICAL STATE OF CALIFORNIA

Ames Research Center
Moffett Field, California

REPLACE ARC JET COMPLEX SVS BOILER
MECHANICAL

PIPE SUPPORT DETAILS

SIZE	CAGE CODE		REV
D	25307	A 231-1300-M511	
SCALE AS SHOWN		INDEX	SHEET OF

FILE NAME: 231-M511.DWG 12/12/12

DWG: R:\234A\60212932.0001 (K11027) Replace Arc Ject Complex SVS Boiler Final Design\500 CAD\MiSheet\231-M511.dwg Version: 18.1s (LMS Tech) User: jlho
DATE: Feb 01, 2013 - 12:50:17 pm

DWG NO.	SH.	REV
A231-1300-M512		

SHEET NOTES

1. ALL WELDED ATTACHMENTS TO PIPE REQUIRE AN ASME B31 WELD AND TEST REQUIREMENTS.
2. ALL VIEWS ARE ELEVATIONS UNLESS OTHERWISE NOTED.
3. ALL BASE PLATES SHALL HAVE STANDARD HOLES (1/16" LARGER THAN BOLT SIZE) OTHERWISE PROVIDE WASHER PLATE WITH 3/16" FILLED WELD ALL AROUND.

KEY NOTES

1. PIPE INSULATION TO BE INSTALLED TO PROVIDE FOR THERMAL GROWTH OF PIPE WITHOUT DAMAGE TO THE INSULATION. MINIMUM 2" CLEARANCE OF EACH SIDE OF THE RESTRAINT.

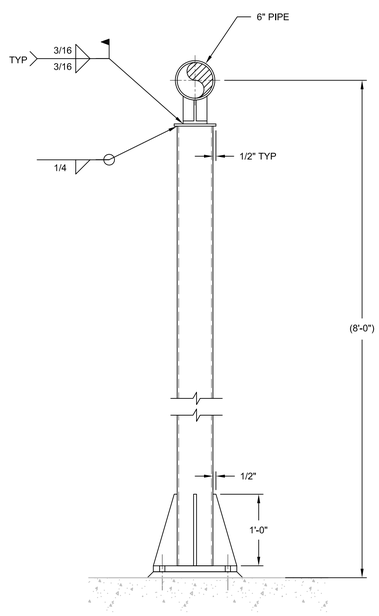

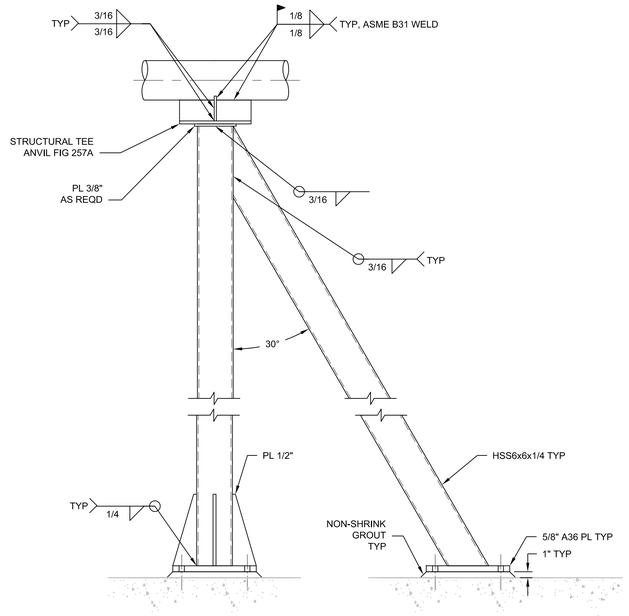

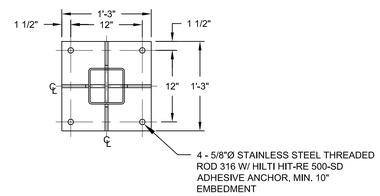

2 268 MU /SCW / SPW SUPPORT
1"=1'-0"

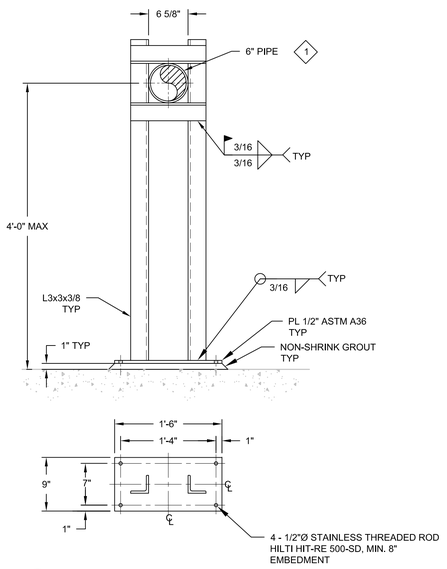

4 262 SCW / SPW SUPPORT
1"=1'-0"

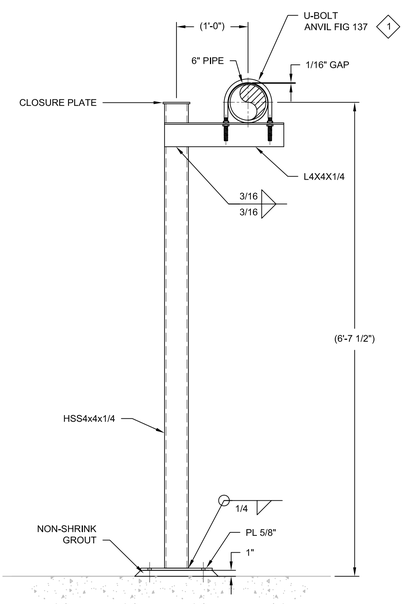

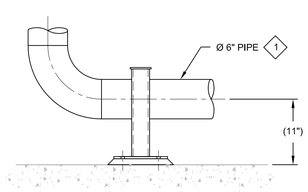

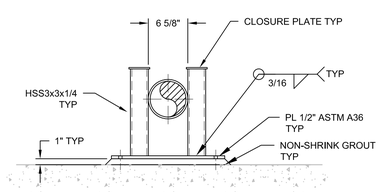

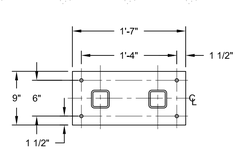

1 267 SCW / SPW SUPPORT
1"=1'-0"

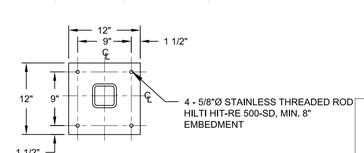

3 269 SCW / SPW SUPPORT
1"=1'-0"

REGISTERED PROFESSIONAL ENGINEER
MICHAEL S. CALLAHAN
No. M21188
MECHANICAL
STATE OF CALIFORNIA

ZONE	LETTER	DESCRIPTION	DRAWN	DATE	APPRVD

REVISIONS

DRAWN R.CLARK	DATE
DESIGNED J. VAN CORBACH	DATE
CHECKED A.FIROUZI	DATE
A&E PM G.HITE	DATE
NASA PM W.LEE	DATE
REQUESTER G.RAICHE	DATE
R&QA	DATE
SAFETY/PSM D.FRASER	DATE
SUPERVISOR S.FRANKEL	DATE

Ames Research Center
Moffett Field, California

REPLACE ARC JET COMPLEX SVS BOILER
MECHANICAL

PIPE SUPPORT DETAILS

SIZE	CAGE CODE		REV
D	25307	A 231-1300-M512	
SCALE AS SHOWN		INDEX	SHEET OF

FILE NAME:
231-M512.DWG 12/12/12

DWG: R:\234\60\23\32.0001 (K11027) Replace Arcjet Complex SVS Boiler Final Design\500 CAD\MS\Sheet\231-M512.dwg Version: 18.1s (LMS Tech) User: jlho
DATE: Feb 01, 2013 - 12:50:21 pm

DWG NO.	SH.	REV
A231-1300-M513		

SHEET NOTES

1. ALL WELDED ATTACHMENTS TO PIPE REQUIRE AN ASME B31 WELD AND TEST REQUIREMENTS.
2. FOR W BEAM AND W COLUMN SIZES SEE STRUCTURAL DRAWINGS
3. ALL BASE PLATES SHALL HAVE STANDARD HOLES (1/16" LARGER THAN BOLT SIZE) OTHERWISE PROVIDE WASHER PLATE WITH 3/16" FILLED WELD ALL AROUND.

KEY NOTES

1. PIPE INSULATION TO BE INSTALLED TO PROVIDE FOR THERMAL GROWTH OF PIPE WITHOUT DAMAGE TO THE INSULATION. MINIMUM 2" CLEARANCE OF EACH SIDE OF THE RESTRAINT.

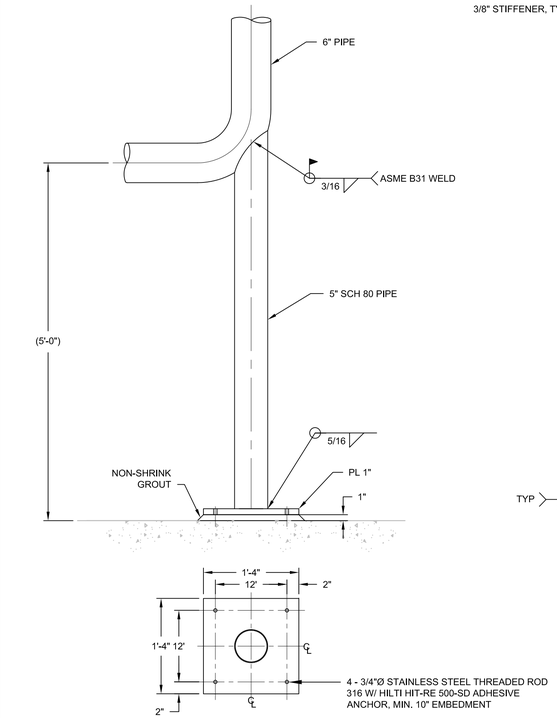

1 280 BFD SUPPORT
1"=1'-0"

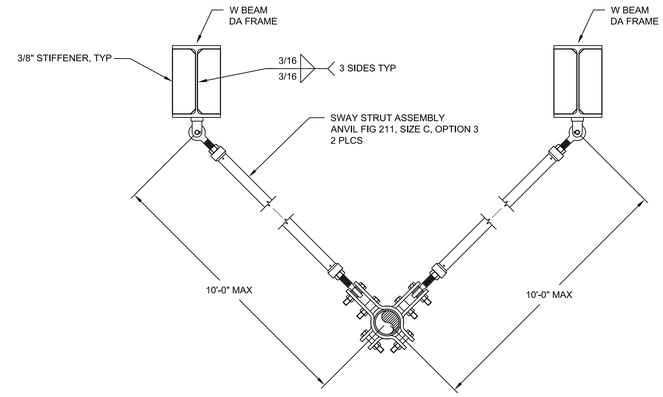

PLAN VIEW

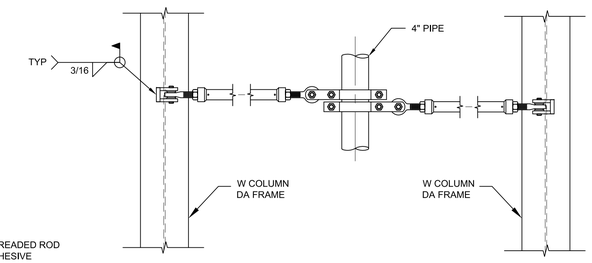

3 275 BFS / BFW SUPPORT
1"=1'-0"

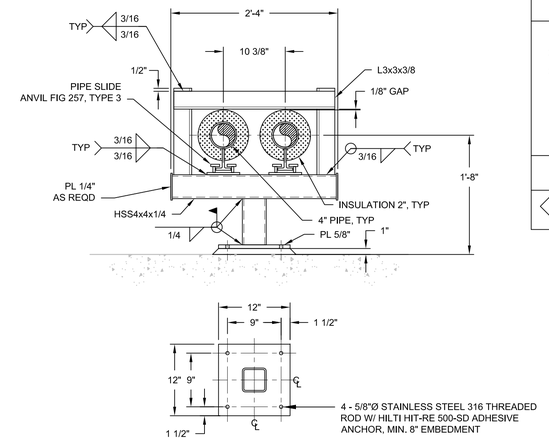

5 282 BFW SUPPORT
1"=1'-0"

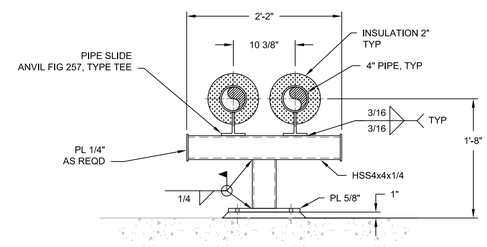

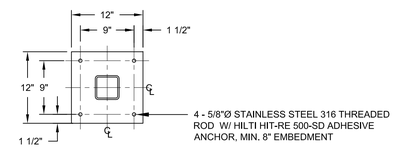

6 283 BFW SUPPORT
1"=1'-0"

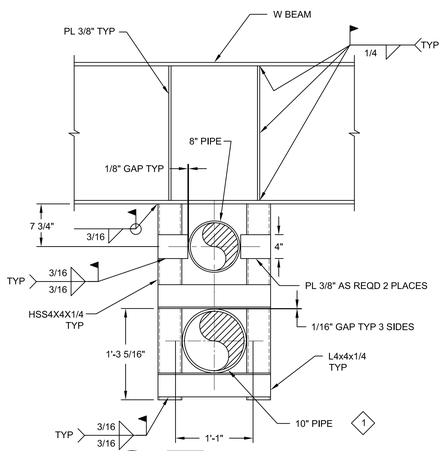

2 281 BFD SUPPORT
1"=1'-0"

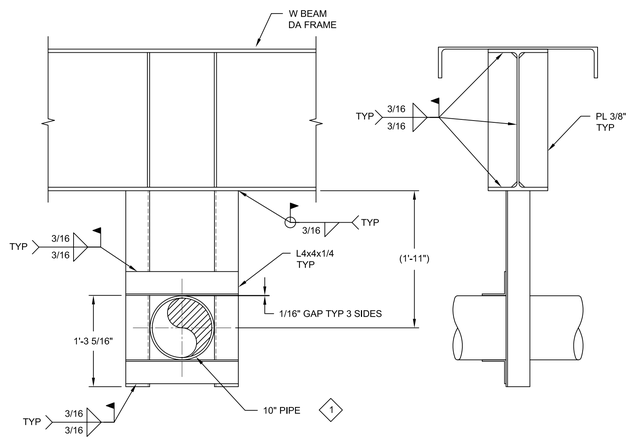

4 276 BFS SUPPORT
1"=1'-0"

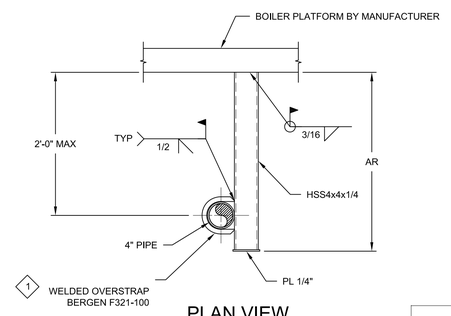

PLAN VIEW

7 284 BFW SUPPORT
1"=1'-0"

REGISTERED PROFESSIONAL ENGINEER MICHAEL S. CALLAHAN No. M21188 MECHANICAL STATE OF CALIFORNIA

ZONE	LETTER	DESCRIPTION	DRAWN	DATE	APPRVD

REVISIONS

DRAWN R.CLARK	DATE
DESIGNED J. VAN CORBACH	DATE
CHECKED A.FIROUZI	DATE
A&E PM G.HITE	DATE
NASA PM W.LEE	DATE
REQUESTER G.RAICHE	DATE
R&QA	DATE
SAFETY/PSM D.FRASER	DATE
SUPERVISOR S.FRANKEL	DATE

Ames Research Center
Moffett Field, California

REPLACE ARC JET COMPLEX SVS BOILER
MECHANICAL

PIPE SUPPORT DETAILS

SIZE	CAGE CODE		REV
D	25307	A 231-1300-M513	
SCALE AS SHOWN		INDEX	SHEET OF

FILE NAME: 231-M513.DWG 12/12/12

DWG: R:\234A\60212932.0001 (K11027) Replace Arc Jet Complex SVS Boiler Final Design\500 CAD\MiSheet\231-M513.dwg Version: 18.1s (LMS Tech) User: jjlio
DATE: Feb 01, 2013 - 12:50:25 pm

DWG NO.	SH.	REV
A231-1300-M514		

SHEET NOTES

1. ALL WELDED ATTACHMENTS TO PIPE REQUIRE AN ASME B31 WELD AND TEST REQUIREMENTS.
2. FOR W BEAM SIZES SEE STRUCTURAL DRAWINGS.

KEY NOTES

1. PIPE INSULATION TO BE INSTALLED TO PROVIDE FOR THERMAL GROWTH OF PIPE WITHOUT DAMAGE TO THE INSULATION. MINIMUM 2" CLEARANCE OF EACH SIDE OF THE RESTRAINT.

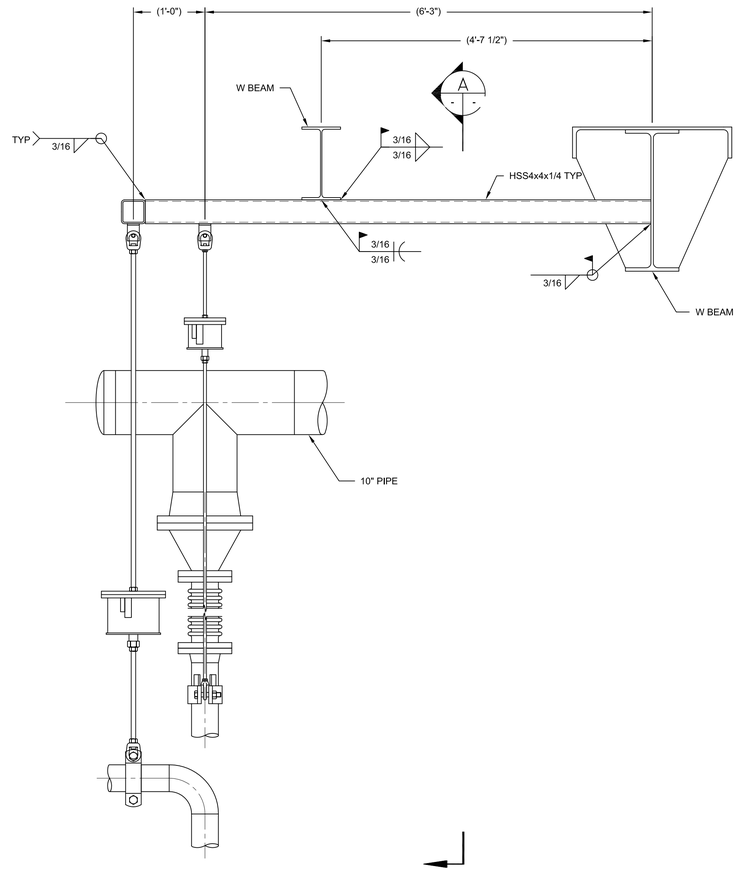

1 272 BFS / BFW SUPPORT
1"=1'-0"

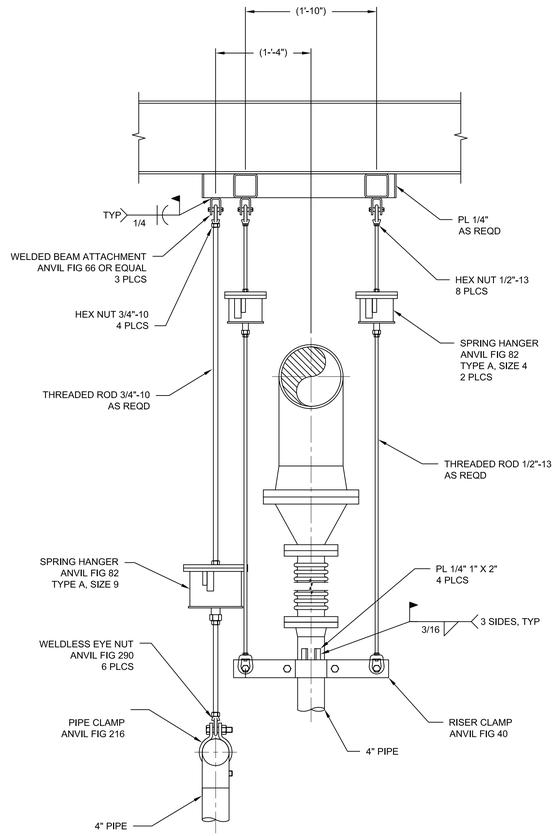

A SECTION
SCALE: 1" = 1'-0"

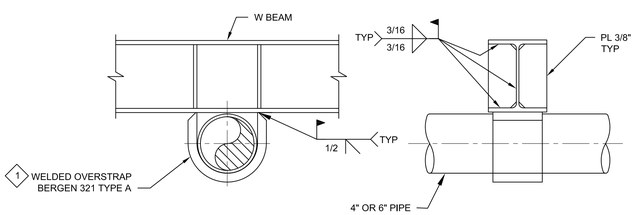

2 287 BFW PIPE SUPPORT
1-1/2"=1'-0"

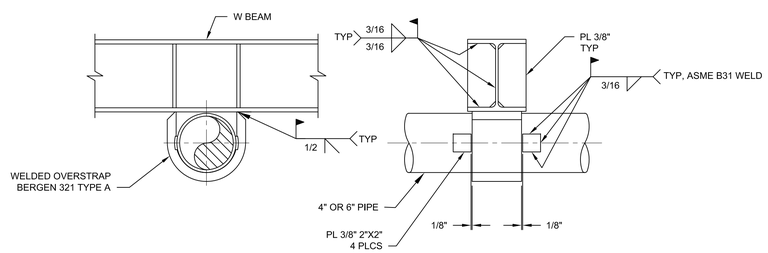

3 288 BFW PIPE SUPPORT
1-1/2"=1'-0"

REGISTERED PROFESSIONAL ENGINEER
MICHAEL S. CALLAHAN
No. M21188
MECHANICAL
STATE OF CALIFORNIA

ZONE	LETTER	DESCRIPTION	DRAWN	DATE	APPRVD

REVISIONS

DRAWN R.CLARK	DATE
DESIGNED J. VAN CORBACH	DATE
CHECKED A.FIROUZI	DATE
A&E PM G.HITE	DATE
NASA PM W.LEE	DATE
REQUESTER G.RAICHE	DATE
R&QA	DATE
SAFETY/PSM D.FRASER	DATE
SUPERVISOR S.FRANKEL	DATE

Ames Research Center
Moffett Field, California

REPLACE ARC JET COMPLEX SVS BOILER
MECHANICAL

PIPE SUPPORT DETAILS

SIZE	CAGE CODE		REV
D	25307	A 231-1300-M514	
SCALE AS SHOWN		INDEX	SHEET OF

FILE NAME:
231-M514.DWG 12/12/12

DWG: R:\234A\80212032.0001 (K11027) Replace Arc Jet Complex SVS Boiler Final Design\500 CAD\MiSheet\231-M514.dwg Version: 18.1s (LMS Tech) User: jlho
DATE: Feb 01, 2013 - 12:50:29 pm

DWG NO.	SH.	REV
A231-1300-M515		

SHEET NOTES

1. ALL WELDED ATTACHMENTS TO PIPE REQUIRE AN ASME B31 WELD AND TEST REQUIREMENTS.
2. FOR W BEAM SIZES SEE STRUCTURAL DRAWINGS.

KEY NOTES

1 NOT USED.

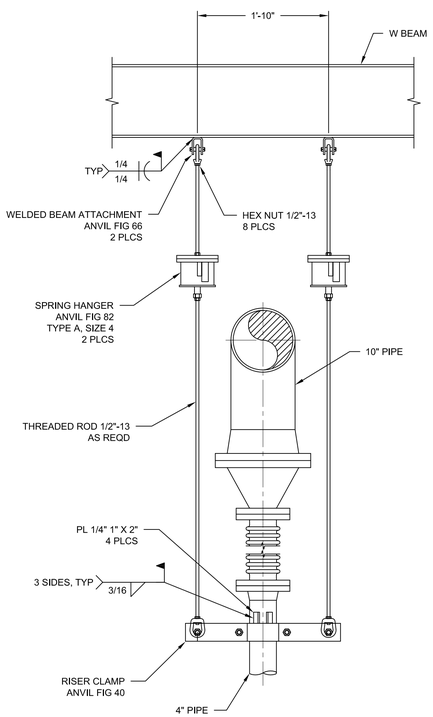

1 273 BFS SUPPORT
1"=1'-0"

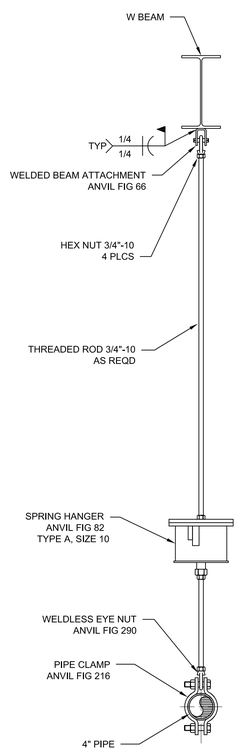

2 294 BFW SUPPORT
1"=1'-0"

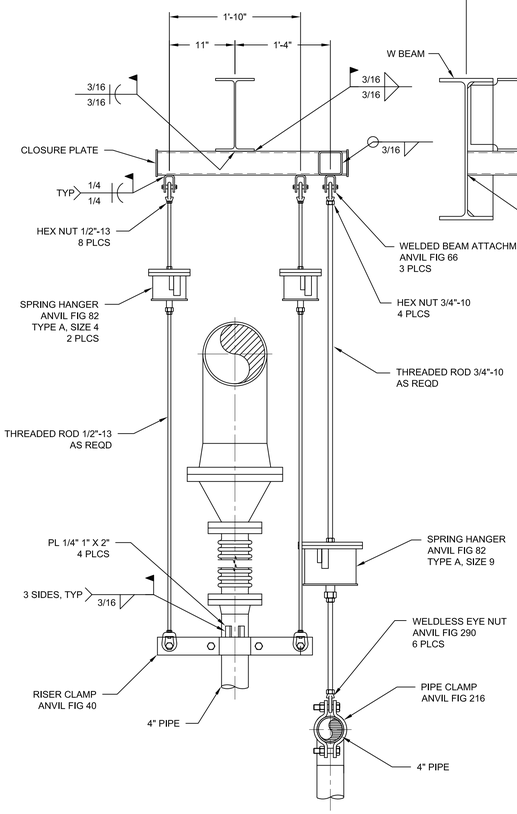

A SECTION
SCALE: 1" = 1'-0"

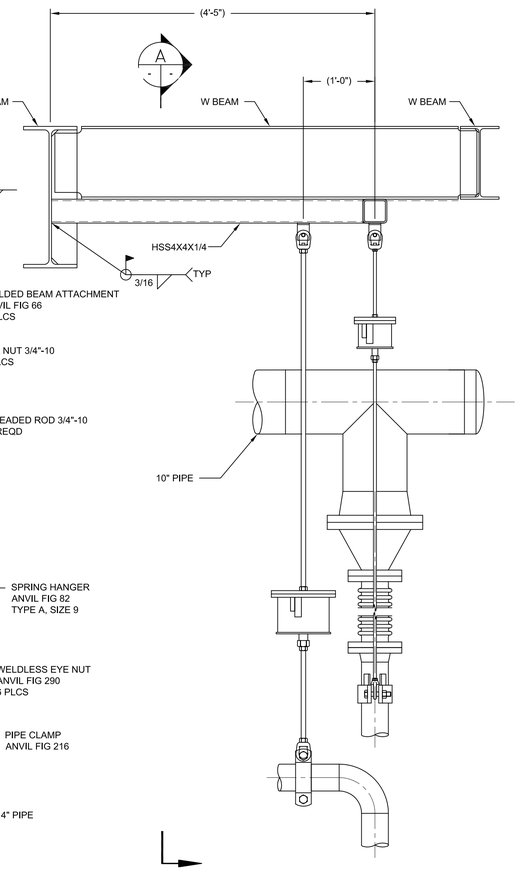

3 274 BFS / BFW SUPPORT
1"=1'-0"

ZONE	LETTER	DESCRIPTION	DRAWN	DATE	APPRVD

REVISIONS

DRAWN R.CLARK	DATE
DESIGNED J. VAN CORBACH	DATE
CHECKED A.FIROUZI	DATE
A&E PM G.HITE	DATE
NASA PM W.LEE	DATE
REQUESTER G.RAICHE	DATE
R&QA	DATE
SAFETY/PSM D.FRASER	DATE
SUPERVISOR S.FRANKEL	DATE

REGISTERED PROFESSIONAL ENGINEER MICHAEL S. CALLAHAN No. M21188 MECHANICAL STATE OF CALIFORNIA

Ames Research Center
Moffett Field, California

REPLACE ARC JET COMPLEX SVS BOILER
MECHANICAL

PIPE SUPPORT DETAILS

SIZE	CAGE CODE		REV
D	25307	A 231-1300-M515	
SCALE AS SHOWN		INDEX	SHEET OF

FILE NAME: 231-M515.DWG 12/12/12

DWG: P:\234AN\60212932.0001 (1K11027) Replace Arc Jet Complex SVS Boiler Final Design\500 CAD\M\Sheet\231-M515.dwg Version: 18.1s (LMS Tech) User: jlho
DATE: Feb 01, 2013 - 12:50:33 pm

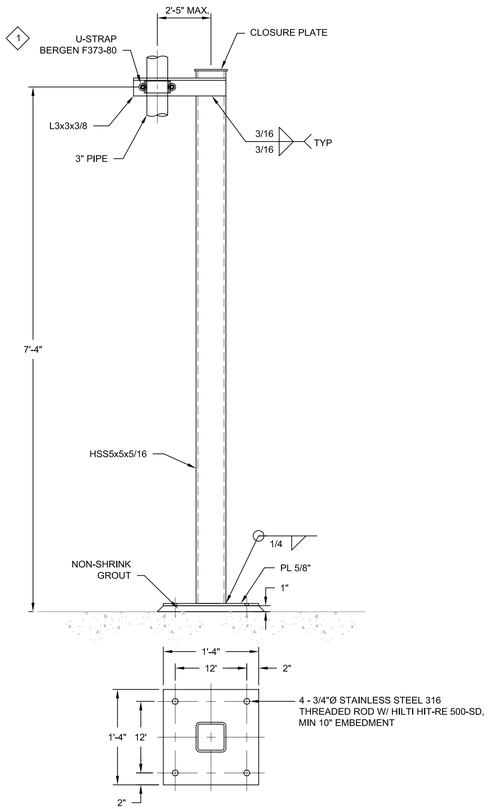

1 290 BFW SUPPORT
1"=1'-0"

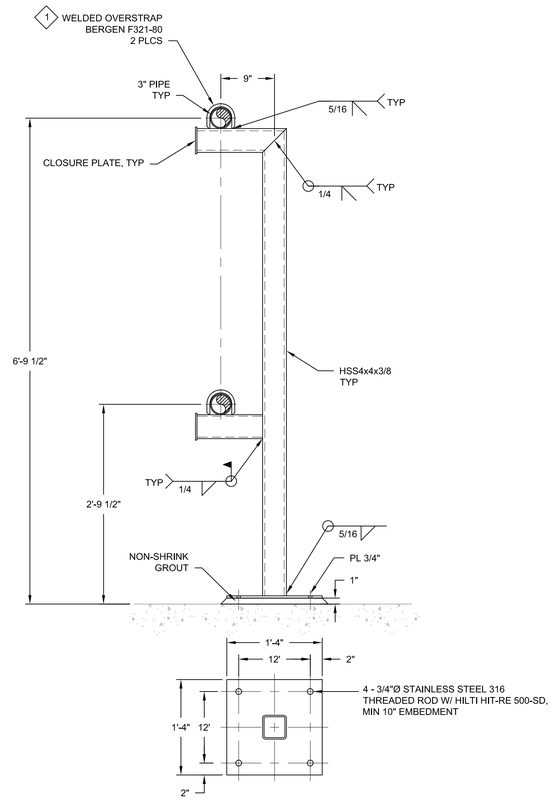

2 286 BFW SUPPORT
1"=1'-0"

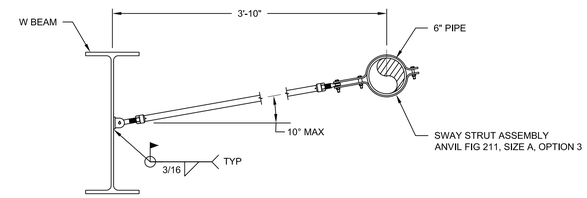

3 289 BFW SUPPORT
1"=1'-0"

SHEET NOTES

1. FOR W BEAM SIZES SEE STRUCTURAL DRAWINGS.
2. ALL BASE PLATES SHALL HAVE STANDARD HOLES (1/16" LARGER THAN BOLT SIZE) OTHERWISE PROVIDE WASHER PLATE WITH 3/16" FILLED WELD ALL AROUND.

KEY NOTES

1. PIPE INSULATION TO BE INSTALLED TO PROVIDE FOR THERMAL GROWTH OF PIPE WITHOUT DAMAGE TO THE INSULATION. MINIMUM 2" CLEARANCE OF EACH SIDE OF THE RESTRAINT.

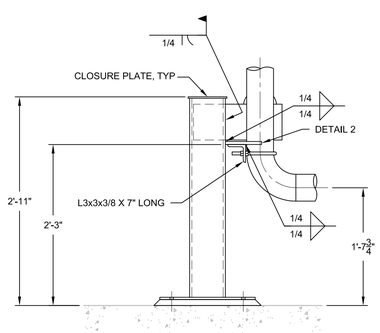

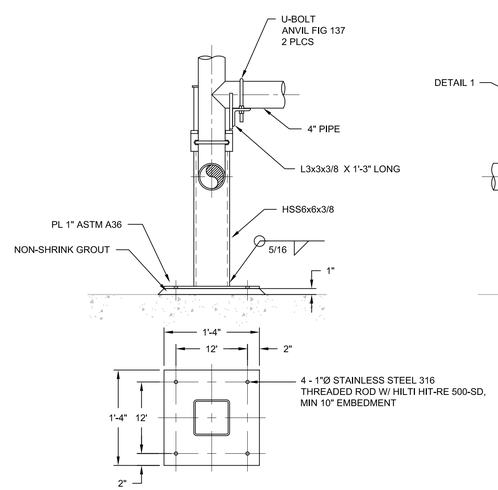

4 285 BFW SUPPORT
1"=1'-0"

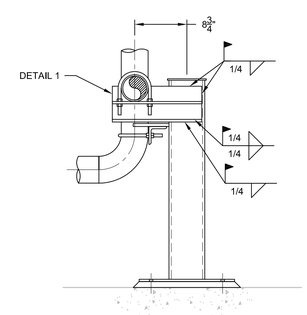

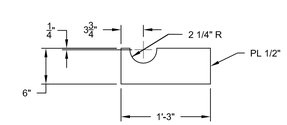

DETAIL 1
1" = 1'-0"

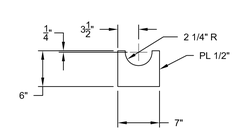

DETAIL 2
1" = 1'-0"

ZONE	LETTER	DESCRIPTION	DRAWN	DATE	APPRVD

REVISIONS

DRAWN R.CLARK	DATE
DESIGNED J. VAN CORBACH	DATE
CHECKED A.FIROUZI	DATE
A&E PM G.HITE	DATE
NASA PM W.LEE	DATE
REQUESTER G.RAICHE	DATE
R&QA	DATE
SAFETY/PSM D.FRASER	DATE
SUPERVISOR S.FRANKEL	DATE

REGISTERED PROFESSIONAL ENGINEER MICHAEL S. CALLAHAN No. M21188 MECHANICAL STATE OF CALIFORNIA

Ames Research Center
Moffett Field, California

REPLACE ARC JET COMPLEX SVS BOILER
MECHANICAL

PIPE SUPPORT DETAILS

SIZE	CAGE CODE		REV
D	25307	A 231-1300-M516	
SCALE AS SHOWN		INDEX	SHEET OF

FILE NAME: 231-M516.DWG 12/12/12

DWG: R:\234A\80212932.0001 (K11027) Replace Arc Jet Complex SVS Boiler Final Design\500 CAD\MI\Sheet\231-M516.dwg Version: 18.1s (LMS Tech) User: jjho
DATE: Feb 01, 2013 - 12:50:36 pm

DWG NO.	SH.	REV
A231-1300-M517		

SHEET NOTES

1. FOR W BEAM SIZES SEE STRUCTURAL DRAWINGS.

KEY NOTES

1. PIPE INSULATION TO BE INSTALLED TO PROVIDE FOR THERMAL GROWTH OF PIPE WITHOUT DAMAGE TO THE INSULATION. MINIMUM 2" CLEARANCE OF EACH SIDE OF THE RESTRAINT.

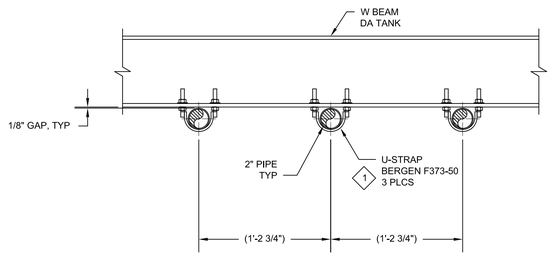

1 291 BFR SUPPORT
1-1/2"=1'-0"

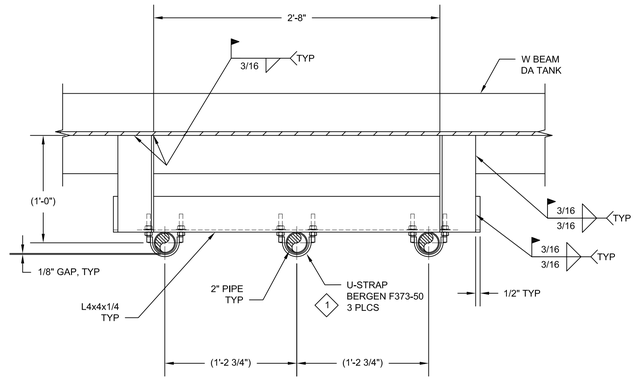

PLAN VIEW

2 292 BFR SUPPORT
1-1/2"=1'-0"

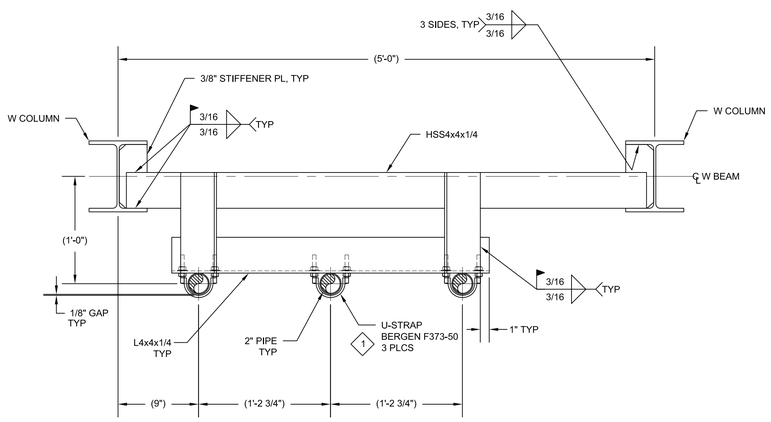

PLAN VIEW

3 293 BFR SUPPORT
1-1/2"=1'-0"

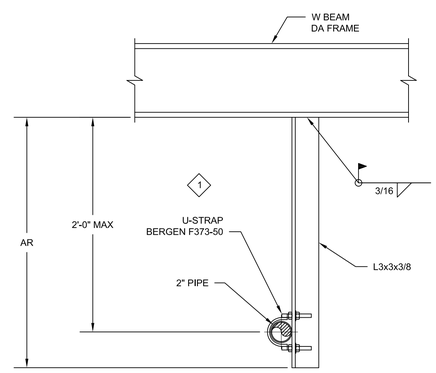

3 295 BFR SUPPORT
1-1/2"=1'-0"

ZONE	LETTER	DESCRIPTION	DRAWN	DATE	APPRVD

REVISIONS

DRAWN R.CLARK	DATE
DESIGNED J. VAN CORBACH	DATE
CHECKED A.FIROUZI	DATE
A&E PM G.HITE	DATE
NASA PM W.LEE	DATE
REQUESTER G.RAICHE	DATE
R&QA	DATE
SAFETY/PSM D.FRASER	DATE
SUPERVISOR S.FRANKEL	DATE

REGISTERED PROFESSIONAL ENGINEER
MICHAEL S. CALLAHAN
No. M21188
MECHANICAL
STATE OF CALIFORNIA

Ames Research Center
Moffett Field, California

REPLACE ARC JET COMPLEX SVS BOILER
MECHANICAL

PIPE SUPPORT DETAILS

SIZE	CAGE CODE		REV
D	25307	A 231-1300-M517	
SCALE AS SHOWN		INDEX	SHEET OF

FILE NAME:
231-M517.DWG 12/12/12

DWG: R:\234A\80212932.0001 (K11027) Replace Arc Jet Complex SVS Boiler Final Design\500 CAD\MiSheet\231-M517.dwg Version: 18.1s (LMS Tech) User: jjlho
DATE: Feb 01, 2013 - 12:50:40 pm

DWG NO.	SH.	REV
A231-1300-M518		

SHEET NOTES

1. SEE SHEET M601, M602 AND M603 FOR EQUIPMENT AND PIPE SCHEDULES.

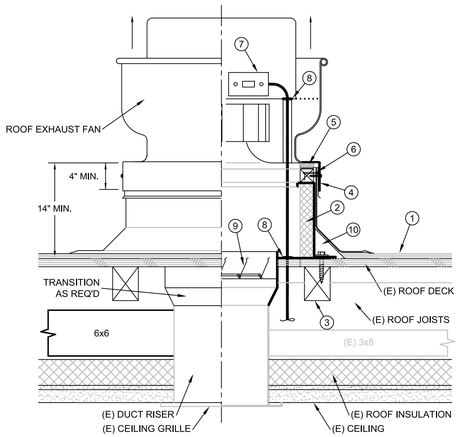

DETAIL NOTES:
1. BUILT-UP ROOFING. SEE 12/A602 FOR ROOF FLASHING AND ROOF SEALING REQUIREMENTS.
2. PREFABRICATED ROOF CURB WITH 1½" RIGID INSULATION. SECURE BASE FLANGE TO ROOF DECK WITH SHEET METAL SCREWS AT 8" ON CENTER, MINIMUM TWO EACH SIDE.
3. REFER TO STRUCTURAL DWGS FOR FRAMING OF ROOF OPENING.
4. FAN CURB CAP. SECURE CURB CAP TO CURB WITH TWO #10 SHEET METAL SCREW EACH SIDE.
5. ½" THICK X 1½" WIDE PVC FOAM GASKET OR RUBBER CURB SEAL BETWEEN FAN CURB CAP AND ROOF CURB.
6. SECURE ROOF FLASHING TO TOP OF CURB NAILER.
7. ELECTRIC SAFETY DISCONNECT SWITCH.
8. SEAL ELECTRIC POWER ENTRY WEATHERTIGHT WITH GROMMET.
9. BACKDRAFT DAMPER.
10. 4" ROOFING CANT

1 TOILET ROOF EXHAUST FAN
SCALE: NONE

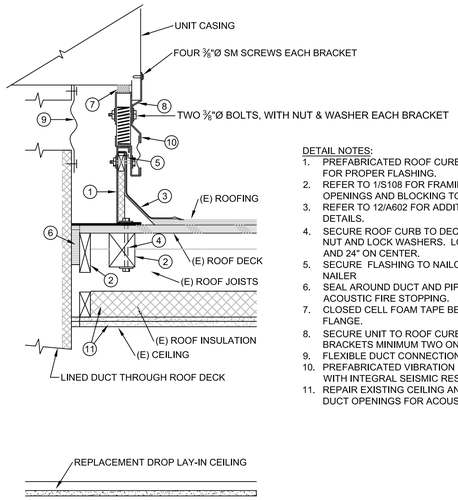

DETAIL NOTES:
1. PREFABRICATED ROOF CURB. INSTALL FACING AS NEEDED FOR PROPER FLASHING.
2. REFER TO 1/S108 FOR FRAMING DETAILS OF ROOF OPENINGS AND BLOCKING TO ANCHOR ROOF CURB..
3. REFER TO 12/A602 FOR ADDITIONAL CANT AND FLASHING DETAILS.
4. SECURE ROOF CURB TO DECK WITH ½"Ø THROUGH BOLT, NUT AND LOCK WASHERS. LOCATE 12" FROM EACH END AND 24" ON CENTER.
5. SECURE FLASHING TO NAILOR, AND EXTEND OVER TOP OF NAILER
6. SEAL AROUND DUCT AND PIPE PENETRATIONS WITH ACOUSTIC FIRE STOPPING.
7. CLOSED CELL FOAM TAPE BETWEEN CURB CAP AND DUCT FLANGE.
8. SECURE UNIT TO ROOF CURB WITH ½"x3"x⅜" BENT PLATE BRACKETS MINIMUM TWO ON LONG SIDES.
9. FLEXIBLE DUCT CONNECTION TO UNIT.
10. PREFABRICATED VIBRATION ISOLATION (SPRING) CURB WITH INTEGRAL SEISMIC RESTRAINT AND CURB ADAPTOR.
11. REPAIR EXISTING CEILING AND ROOF INSULATION AROUND DUCT OPENINGS FOR ACOUSTIC ISOLATION.

2 RTU MOUNTING
SCALE: NONE

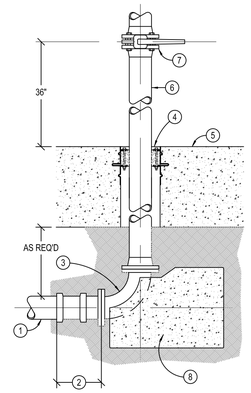

DETAIL NOTES:
1. 6" PVC MAKEUP WATER PIPE AND FITTINGS. SEE CIVIL DWGS.
2. C-900 BELL X FLANGE ADAPTOR
3. STEEL PIPE SPOOL.
4. FLANGED ELBOW: LONG RADIUS CAST CARBON STEEL WITH STAINLESS STEEL BOLTS. PROVIDE COAL TAR COATING AND WRAP.
5. PIPE SEAL:
6. CONCRETE MAT FOUNDATION: SEE STRUCTURAL DWGS.
7. STEEL PIPE: PROVIDE COAL TAR COATING AND POLYETHYLENE WRAP.
8. SHUTOFF VALVE.
9. CONCRETE THRUST BLOCK: SEE CIVIL DWGS FOR SIZE AND SPECIFICATIONS.

3 PVC TO STEEL TRANSITION
SCALE: NONE

DETAIL NOTES:
1. W14X22 OR W12X16 PARALLEL TO MAIN NH3 PIPE RUN
2. TOP & BOTTOM FLANGE OF W24X55
3. NH3 PIPE
4. FRAMING STRUT: B-LINE #B22
5. BEAM CLAMP: B-LINE #B314, TYP. OF 2.
6. CONNECTOR FITTING: B-LINE #B272
7. NO-TWIST SQUARE WASHER: B-LINE #201D,
8. ⅜"STUD BOLT WITH NUT: B-LINE #SN228
9. PIPE GUIDE SLEEVE AND CLAMP: B-LINE #B2417 & #B2027
10. I-BEAM CLAMP: B-LINE #213, TYP. OF 4.
11. SLOTTED 3-HOLE U-SUPPORT: B-LINE #B333, BOLT TO STRUT, TYP. OF 2.
12. PIPE RISER CLAMP: B-LINE #B3373, TYP. OF 2 EACH SIDE.
13. PIPE CLAMP: B-LINE #B2027
14. STRUCTURAL INTERMEDIATE W14X30 ALONG COLUMN LINE 8
15. ½" ANCHOR BOLT WITH 2" MIN. EMBEDMENT, TYP. OF 2.
16. COLUMN SUPPORT: B-LINE #B614
17. STRUCTURAL COLUMN PLAN VIEW
18. FRAMING STRUT: B-LINE #B52
19. ⅜" BOLT FOR TIE ROD: WITH NUT AND WASHERS, TYP. OF 2.
20. STRUCTURAL CROSS BRACING: HSS6X6X1/2

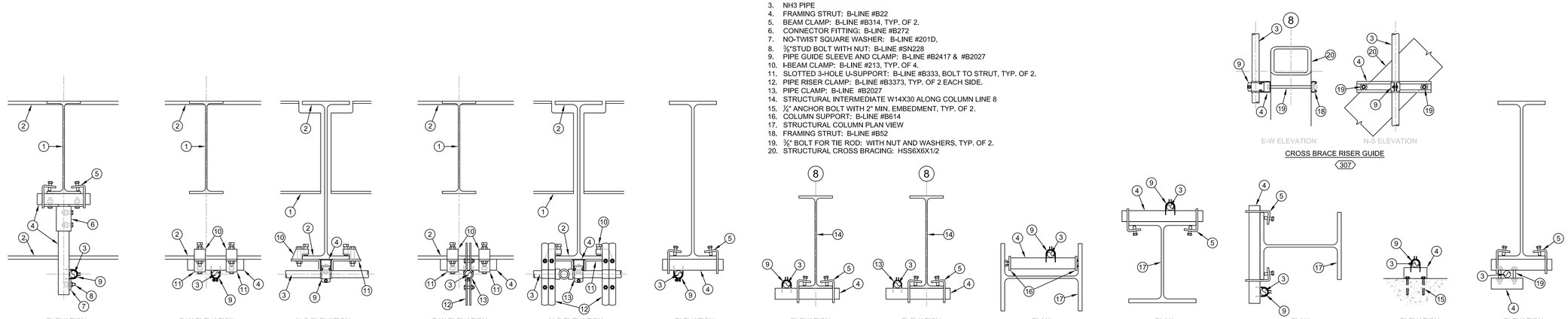

4 AMMONIA PIPE SUPPORTS
SCALE: NONE

ZONE	LETTER	DESCRIPTION	DRAWN	DATE	APPRVD

REVISIONS

DRAWN M.CALLAHAN	DATE
DESIGNED M.CALLAHAN	DATE
CHECKED P.YALLOURIS	DATE
A&E PM G.HITE	DATE
NASA PM W.LEE	DATE
REQUESTER G.RAICHE	DATE
R&QA	DATE
SAFETY/PSM D.FRASER	DATE
SUPERVISOR S.FRANKEL	DATE

REGISTERED PROFESSIONAL ENGINEER MICHAEL S. CALLAHAN No. M21188 MECHANICAL STATE OF CALIFORNIA

Ames Research Center
Moffett Field, California

REPLACE ARC JET COMPLEX SVS BOILER
MECHANICAL

DETAILS

SIZE	CAGE CODE		REV
D	25307	A 231-1300-M518	
SCALE NONE		INDEX	SHEET OF

FILE NAME: 231-M518.DWG 12/12/12

DWG: R:\234\60213932.0001 (K11027) Replace Arc Jet Complex SVS Boiler Final Design\500 CAD\MSheet\231-M518.dwg Version: 18.1s (LMS Tech) User: jlho
DATE: Feb 01, 2013 - 12:50:44 pm

STEAM BOILERS

UNIT TAG	MAWP PSIG	SRV PSIG	STEAM PPH	STEAM PSIG	STEAM °F	STEAM DRYNESS	FUEL TYPE	FUEL INPUT MBH	FUEL HHV BTU/LB	FUEL EFF	GAS SUPPLY PSIG	FORCED DRAFT FAN EXCESS AIR	FORCED DRAFT FAN TAG	STACK EFFLUENT NOx PPM	ECONOMIZER FLUE GAS PPH	ECONOMIZER EGT °F	ECONOMIZER LGT °F	ECONOMIZER BFW PPH	ECONOMIZER EWT °F	ECONOMIZER LWT °F	ECONOMIZER WPD	ECONOMIZER PIPE CONN	OPER WT LBS	MFR & MODEL NO.	DETAIL	REMARKS
SB-1,2,3	500	500	120,000	425	454°	99.5%	NAT. GAS	148,100	21,815	85.1%	17	15%	FDF-1,2,3	5	~132,000	669°	254°	124,000	232°	"	23'	4"	180,000	SEE KN#1		ASME SEC I, SEE KN#2,3,4,5,6,9,12
SB-4	15	15	288	12	244°	-	NAT. GAS	350	21,815	80.0%	1/4	-	-	30	-	-	-		-	-	-	-	1,320	BRYAN DR350-S		ASME SEC IV, SEE KN#10,12

FANS

UNIT TAG	SERVICE	PPH	CFM	FSP	TYPE	MAX dBA	WHEEL TYPE (1)	WHEEL CLASS	DRIVE	OUTLET FPM	FAN RPM	MOTOR DATA BHP	MOTOR DATA MHP	MOTOR DATA RPM	MOTOR DATA VOLTS/PHASE	MOTOR DATA VFD	FAN WT LBS	MOTOR WT LBS	PAD WT LBS	MFR & MODEL NO.	REMARKS
FDF-1,2,3	COMBUSTION AIR	120,000	28,000	20"	INDUSTRIAL	85	AF	40	DIRECT	4,150	2,086	111	200	2,086	460 / 3Ø	YES	2,560	2,129	10,100	TWIN CITY 330 HAF	ARRANGEMENT 8, WITH EVASE', SEE KN#11
TEF-1	TOILET EXHAUST	-	320	0.25"	ROOF UPBLAST	-	BI	-	DIRECT	-	1,300	0.034	1/30	1,300	115 / 1Ø	NO	34	-	-	GREENHECK CUE-085-G	MAX 5.4 SONES, SPEED CONTRTOLLER

(1) FC=FORWARD CURVED BI=BACKWARD INCLINED AF=AIRFOIL AX=AXIAL RB=RADIAL BLADE

PUMPS

UNIT TAG	SERVICE	TYPE	INLETxOUTLET CONNECTION SIZE	GPM DESIGN	GPM MIN	TDH "WG	SHUT OFF HEAD	SUCTION STATIC HEAD	NPSH REQ'D	FLUID TYPE	FLUID TEMP	FLUID SG	MAX TEMP °F	MAWP PSIG	STRAINER	PUMP RPM	MOTOR DATA RPM	MOTOR DATA BHP	MOTOR DATA HP	MOTOR DATA VOLTS/PHASE	MOTOR DATA VFD	PUMP WT LBS	MOTOR WT LBS	BASE WT LBS	DETAIL	MFR & MODEL NO.	REMARKS
BFP-1,2,3	BOILER FEEDWATER	MULTISTAGE	4" x 2½"	330	87	1384'	1607'	22'	11.3'	H_2O	232°F	0.95	240"	789	3/64"Ø PERF	2,746	3,550	151	200	460 / 3Ø	YES	1259	2,129	3,450		SULZER MBN50-215	SEE KN#7
BFP-4	AUXILIARY FEEDWATER	IN-LINE	1" x 1"	5	1	50'	51'	22'	"	H_2O	224°F	0.95	225"	150	20 MESH	3,450	3,450	0.20	1/2	115 / 1Ø	NO	16	"	NA	-	TACO 2400-50	-
HXP-1	SCW PREHEATING (HOT WELL)	END-SUCTION	4" x 3"	430	150	61'	74'	59'	6.2'	H_2O	50°F	1.00	225"	175	3/64"Ø PERF		1,750	8.42	10	460 / 3Ø	YES	370	165	1,275		B&G 1510-3BC	-
HXP-2	SPW PREHEATING (CBD)	IN-LINE	1½" x 1½"	30	20	30'	41'	59'	6.8'	H_2O	110°F	0.99	225"	175	20 MESH	1,750	1,750	0.50	1	115 / 1Ø	NO	85	NA	NA	-	B&G 60-1½x1½x6¼"	-
HXP-3	CBD HEAT RECOVERY	IN-LINE	1" x 1"	12	8	29'	29'	22'	4.4'	H_2O	232°F	0.95	250"	175	20 MESH	1,750	1,750	0.26	1/2	115 / 1Ø	NO	55	NA	NA	-	B&G 60-1x1x5¼"	EPT/TUNGSTEN-CARBIDE SEAL
HWP-1	N231 (E) HEATING WATER	END SUCTION	1¼" x 1¼"	52	15	44'	51'	35'	14.2'	H_2O	185°F	1.00	225"	175	-	1,750	1,750	-	2	460 / 3Ø	NO	131	75	NA	-	B&G 1531-1½BC	(E) TO REMAIN
CFP-1,2A	CHEMICAL FEED	HYDRAULIC DIAPHRAGM	½" x ¼"	6	-	105'	-	1'	NA	-	50°F	1.00	200"	100	20 MESH	NA	1,750	-	1/4	115 / 1Ø	NO	75	-	NA	-	-	SEE KN#8
CFP-2B,3A,3B CFP-4A,4B	CHEMICAL FEED	HYDRAULIC DIAPHRAGM	½" x ¼"	6	-	1476'	-	1'	NA	-	50°F	1.00	200"	800	20 MESH	NA	1,750	-	1/4	115 / 1Ø	NO	75	-	NA	-	-	SEE KN#8

PLATE FRAME HEAT EXCHANGERS

UNIT TAG	SERVICE	RATED TEMP °F	MAWP PSIG	HOT FLUID FLUID	HOT FLUID GPM	HOT FLUID EWT °F	HOT FLUID LWT °F	HOT FLUID WPD	HOT FLUID PIPE CONN	HOT FLUID PIPE RUN	COLD FLUID FLUID	COLD FLUID GPM	COLD FLUID EWT °F	COLD FLUID LWT °F	COLD FLUID WPD	COLD FLUID PIPE CONN	COLD FLUID PIPE RUN	UNIT DIMENSIONS LxWxH	OPER WT LBS	MFR & MODEL NO.	REMARKS
HX-1	HOT WELL RECOVERY	240"	150	WATER	2430	123"	113"	24'	6"	6"	WATER	430	50"	103"	1'	6"	6"	102"x29"x77"	7,400	ALFA-FLEX M#30100-60245	(E) TO REMAIN
HX-2	BD RECOVERY	240"	75	WATER	12	232"	60"	2'	1"	1½"	WATER	30	50"	109"	13'	1"	2"	12"x8"x26"	117	MUELLER LC-150	ASME SEC VIII, SEE KN#12

DEAERATOR HEATER & FEEDWATER TANK

UNIT TAG	TYPE	BOILER PLANT CAPACITY PPH	MAWP PSIG	RELIEF PSIG	DEAERATING HEATER STEAM INLET PSIG	DEAERATING HEATER STEAM ENTHALPY BTU/LB	DEAERATING HEATER STEAM FLOW PPH	MAKE-UP WATER INLET SIZE	MAKE-UP WATER FLOW PPH	MAKE-UP WATER EWT	FEEDWATER FLOW PPH	FEEDWATER LWT	FEEDWATER TANK OUTLET SIZE	FEEDWATER TANK TANK GAL	FEEDWATER TANK OVERFLOW GAL	FEEDWATER TANK NORMAL GAL	OPER WT LBS	FLOODED WT LBS	MFR	REMARKS
DAH-1	TRAY	240,000	30	30	7.0	1158	42K	16"	226K	50°F	267K	232°F	10"	18,000	15,000	12,500	177,000	211,000	(1)	ASME SEC VIII, SEE KN#12 (2)(3)(4)(5)(6)(7)

(1) ACCEPTABLE MANUFACTURERS: ECODYNE, CRANE ENVIRONMENTAL, INDUSTRIAL STEAM, JOHNSTON BOILER, KANSAS CITY DEAERATOR, MOSS ENERGY, NEBRASKA, SIEMENS WATER TECHNOLOGIES, OR APPROVED EQUAL. ECODYNE IS BASIS OF DESIGN ONLY.

(2) DEAERATOR: STEAM ATOMIZERS: EASILY REMOVABLE AND REPLACEABLE. VENT CONDENSER: INTEGRAL FOR DEAERATOR DUTY LISTED IN EQUIPMENT SCHEDULE. FEEDWATER TANK: VORTEX BREAKER ON OUTLETS.

(3) PRESSURE VESSELS: HYDROSTATICALLY TEST PER ASME. DESIGN VESSEL FOR SCHEDULED MAWP, PLUS MINIMUM 1/8" CORROSION ALLOWANCE. TANK WALL THICKNESS SHALL NOT BE LESS THAN 1/2". BACKING BANDS ARE PROHIBITED.

(4) NOZZLES: PROVIDE NOZZLES FOR ALL PIPING CONNECTIONS, AND ADDITIONAL NOZZLES AS SPECIFIED. MEET OR EXCEED ALLOWABLE NOZZLE LOADS SCHEDULED ON SHEET M601.

(5) ACCESS: PROVIDE PLATFORMS, CATWALKS AND STAIRWAYS CONFORMING TO OSHA STANDARDS. PROVIDE 30" MINIMUM ACCESS WIDTH AT STORAGE TANK LEVEL FROM OUTSIDE DIAMETER OF TANK INSULATION. PROVIDEPLATFORM ACCESS TO ALL MANWAYS AND PRESSURE RELIEF VALVES. PROVIDE FALL PROTECTION ATTACHMENT POINTS FOR ACCESS TO REMAINDER OF SYSTEM.

(6) TANK SEISMIC DESIGN: DESIGN LOADS PER CBC 2010 AND ASCE 7-05, CHAPTER 15 WITH OCCUPANCY IMPORTANCE FACTOR (I) = 1.5

(7) VESSEL INSULATION: MINIMUM 4" THICK

AMMONIA SYSTEM TANKS

UNIT TAG	SERVICE	GAL	TANK DIMENSIONS DIAM x OAL	RATED TEMP °F	MAWP PSIG	RELIEF PSIG	PRV PSIG	PIPE CONNECTIONS OUTLET	PIPE CONNECTIONS FILL	PIPE CONNECTIONS DRAIN	PIPE CONNECTIONS RELIEF	PIPE CONNECTIONS VENT	PIPE CONNECTIONS GAUGE	TANK WT LBS	OPER WT LBS	MFR & MODEL NO.	REMARKS
TK-5	NH3 BULK STORAGE	100	24"Øx55" (HORIZ)	200"	265	265	50	1¼"	1¼"	1¼"	¾"	-	¾"	365	800	HANSON MFG	TANK SERVICED BY GAS VENDOR (13)
TK-6	NH3 DIFFUSION	750	48"Øx96" (VERT)	200"	2	"	"	-	1¼"	3"	-	3"	¾"	900	7,200	BLUESCOPE WATER	FRESH WATER USED FOR ABSORPTION OF NH3 (14)

SHEET NOTES

1. SEE SHEET M602 AND M603 FOR ADDITIONAL EQUIPMENT AND PIPE SCHEDULES.
2. SEE SHEET M601 FOR ALLOWABLE NOZZLE LOAD SCHEDULE.

KEY NOTES

(1) ACCEPTABLE MANUFACTURERS: RENTECH, NEBRASKA, INDECK, BABCOCK & WILCOX, OR APPROVED EQUAL.

(2) BOILER PERFORMANCE DATA: 100% MAKEUP WATER. NO CONDENSATE RETURN. BLOWDOWN VARIES FROM 4% TO 12% DEPENDING OF MAKE-UP SOURCE WATER QUALITY. SYSTEM MUST PROVIDE DESIGN OUTPUT FOR WORST WATER QUALITY. SYSTEM MUST PROVIDE DESIGN OUTPUT WITH ZERO PREHEATING OF MAKE-UP WATER PRIOR TO DEAERATOR. SYSTEM MUST PROVIDE DESIGN STEAM PRESSURE DOWNSTREAM OF NON-RETURN VALVE. ECONOMIZER GAS DATA IS APPROXIMATE. DESIGN ECONOMIZER BASED ON PREDICTED BOILER PERFORMANCE AND SCHEDULED LGT.

(3) SELECTIVE CATALYTIC REDUCTION (SCR) UNITS: WEIGHT=18,500 LBS. EA.

(4) BOILER FEEDWATER ECONOMIZERS: LEAVING FLUE GAS TEMPERATURE=20°F ABOVE FEEDWATER TEMPERATURE, WATER PRESSURE DROP=10 PSI, WEIGHT=34,000 LBS. EA.

(5) BOILER FABRICATION: SUBMIT COMPLETE NDE RECORDS FROM THE MANUFACTURER, INCLUDING RT FILMS AND UTT SURVEY OF STEAM DRUM AND MUD DRUM OF EACH BOILER.

(6) PROVIDE STEAM TYPE AUXILIARY HEAT EXCHANGER IN MUD DRUM WITH FLANGED CONNECTIONS.

(7) RING SECTION TYPE PUMP. INLET PRESSURE RATING = 145 PSIG.

(8) CHEMICAL FEED PUMPS: PUMPS INCLUDED WITH CHEMICAL FEED TANKS PACKAGES SCHEDULED ON M602. STAINLESS STEEL POSITIVE DISPLACEMENT DIAPHRAM TYPE. FINAL SELECTION OF PUMP, FLOW RATE, FLUID TYPE IS DESIGN-BUILD BY CONTRACTOR TO MEET REQUIREMENTS OF BOILER MFR.

(9) BID OPTION 2: DESIGN AND INSTALL BOILER AUXILIARY HEATING SYSTEM FOR CONNECTION THE HEAT EXCHANGER IN MUD DRUM.

(10) AUXILIARY BOILER: LOW NOX PACKAGE, PUMP CONTROL, LOW WATER CUTOUT.

(11) FORCED DRAFT FAN SELECTIONS ARE FOR REFERENCE ONLY. FINAL SELECTION SHALL BE RESPONSIBILITY OF BOILER AND BURNER MFR SUBJECT TO REVIEW AND APPROVAL BY GOVERNMENT.

(12) SUBMIT NATIONAL BOARD REGISTRATION AND ASME MANUFACTURER'S DATA REPORT

(13) NH3 TANK: ASME RATED TANK. FABRICATE TANK FOR AMMONIA SERVICE AND COMPLIANCE WITH OSHA. SEE M706 FOR ADDITIONAL REQUIREMENTS.

(14) NH3 DIFFUSION TANK: CARBON STEEL, SHOP FABRICATED AND WELDED. TARGET TYPE LIQUID LEVEL INDICATOR. CARBON STEEL SPARGER TUBE. 24"Ø BOLTED SHELL MANWAY. EXTERIOR LADDER. DESIGN TANK TO MEET LISTED SEISMIC AND WIND LOADS. SIZE SPARGER FOR REQUIRED DISCHARGE CAPACITY. 10 YEAR WARRANTY. SEE M706 FOR ADDITIONAL REQUIREMENTS.

ALLOWABLE NOZZLE LOAD SCHEDULE

PIPE SIZE	SERVICE	AXIAL LB	TANGENTIAL LB	BENDING MOMENT FT-LB	REMARKS
1"	-	± 52	± 24	± 80	UON
1½"	-	± 127	± 59	± 196	UON
2"	-	± 252	± 117	± 388	UON
2½"	-	± 439	± 202	± 673	UON
3"	-	± 743	± 343	± 1,142	UON
4"	-	± 1,371	± 633	± 2,109	UON
6"	-	± 2,898	± 1,337	± 4,458	UON
8"	-	± 5,105	± 2,356	± 7,855	UON
10"	-	± 8,448	± 3,898	± 12,995	UON
12"	-	± 12,699	± 5,889	± 19,530	UON
2"	BFW	± 222	± 182	± 390	BFP-1,2,3
2½"	BFW	± 337	± 276	± 464	BFP-1,2,3
4"	BFS	± 451	± 364	± 519	BFP-1,2,3

REGISTERED PROFESSIONAL ENGINEER MICHAEL S. CALLAHAN No. M21188 MECHANICAL STATE OF CALIFORNIA

ZONE	LETTER	DESCRIPTION	DRAWN	DATE	APPRVD

REVISIONS

DRAWN J.HO	DATE	Ames Research Center Moffett Field, California
DESIGNED M.CALLAHAN	DATE	REPLACE ARC JET COMPLEX SVS BOILER MECHANICAL
CHECKED P.YALLOURIS	DATE	EQUIPMENT SCHEDULES
A&E PM G.HITE	DATE	
NASA PM W.LEE	DATE	
REQUESTER G.RAICHE	DATE	
R&QA	DATE	
SAFETY/PSM D.FRASER	DATE	
SUPERVISOR S.FRANKEL	DATE	

SIZE D | CAGE CODE 25307 | A 231-1300-M601 | REV
SCALE — | INDEX | SHEET OF

FILE NAME: 231-M601.DWG 12/12/12

DWG: R:\234AI\60212932.0001 (K11027) Replace Arc Jet Complex SVS Boiler Final Design\500 CAD\MSheet\231-M601_SCHEDULES.dwg Version: 18.1s (LMS Tech) User: jjho
DATE: Feb 01, 2013 - 12:50:50 pm

ROOFTOP AIR CONDITIONING UNIT

AHU		SUPPLY FAN							NET SENSIBLE DX COOLING					HEATING COIL								FILTER BANK								ELECTRICAL DATA			OPER WT LBS	CURB WT LBS	MFR & MODEL NO.	REMARKS	R410A CHARGE, LBS.		ROOM VOLUME CU. FT.
UNIT TAG	MIN OSA CFM	CFM	FSP "WG	WHEEL TYPE	DRIVE	FAN RPM	BHP	HP	EDB	EWB	MBH	AMB	D.O.E. SEER	CFM	EDB	LDB	MBH	EWT	GPM	WPD "WG	BRANCH PIPE SIZE	PRE-FILTER			FINAL FILTER			MAX. FPM	FINAL APD	VOLTS/PHASE	MCA	MOP					ACTUAL	ALLOWABLE	
																						MERV	DEPTH	APD	MERV	DEPTH	APD												
RTU-1	100	1200	3.1"	18" BC	DIRECT	1828	1.03	2	79.5°	60.7°	35.0	100°	15.0	840	63.2°	90.0°	24.4	180°	4.0	0.2'	(E) 1"	8	2"	0.1"	13	4"	0.2"	500	2.5"	460 / 3Ø	13	15	821	360	AAON RQ-003	--	10.8	57	6,138

WATER HEATER

UNIT TAG	TYPE	RECOVERY		STORAGE GAL	UNIT DIMENSIONS	ELECTRICAL				OPER WT LBS	MFR & MODEL NO.
		GPH	TEMP RISE			KW	VOLTS/PHASE	AMP	POWER		
WH-1	INSTANTANEOUS, INDOOR	1.73	50°F - 110°F	NONE	18"Wx28"Hx8"D	15.0	2O8 V / 3Ø	42	NORMAL	35	TANKLESS CE-15KW

FLOW MEASURING DEVICE

UNIT TAG	SYSTEM	TYPE	QTY	FLUID						RATED PSIG	RATED °F	OPER WT LBS	MFR & MODEL NO.	REMARKS
				PPH	TYPE	PSIG	°F	ΔP PSID	PIPE FLANGE					
FM-SB	BOILER HPS	VORTEX	3	104,000	STEAM	425	454°	5.22	8" ANSI 300#	665	750	149	SIERRA INNOVA-MASS #240-V	KN#2,4
FM-HPS	AUXILIARY HPS	VORTEX	1	35,000	STEAM	425	454°	3.00	4" ANSI 300#	665	750	61	SIERRA INNOVA-MASS #240-V	KN#2
FM-BFP	BFW PUMPS	VORTEX	3	126,000	H20	150	232°	0.64	4" ANSI 150#	230	400	44	SIERRA INNOVA-MASS #240-V	-
FM-BFW	BFW TO BOILER	VORTEX	3	126,000	H20	600	232°	0.64	4" ANSI 600#	1455	400	93	SIERRA INNOVA-MASS #240-V	KN#4
FM-SCW	SCW	VORTEX	1	213,000	H20	50	60°	0.34	6" ANSI 150#	290	400	49	SIERRA INNOVA-MASS #240-V	-
FM-NG	GAS TO BOILER	VORTEX	3	7,000	MPG	17.9	60°	0.42	6" ANSI 150#	290	400	49	SIERRA INNOVA-MASS #240-V	KN#4
FM-MPG	TOTAL GAS	VORTEX	1	14,000	MPG	20.4	60°	0.60	8" ANSI 150#	290	400	71	SIERRA INNOVA-MASS #240-V	-
FM-FD	FD FANS	-	3		AIR									-

CONTROL VALVE STATION

UNIT TAG	FLUID	FUNCTION	QTY	VALVE				LINE PIPE SIZE	dB	BYPASS		OPER WT LBS	MFR & MODEL NO.	REMARKS
				TYPE	PPH	FLANGE	Cv			SIZE	Cv			
LCV-SCW	SCW	FEEDWATER LEVEL	1	GBV	212,500	6" ANSI 300#-RF	208	6"	<70	6"	440	600	MASONEILAN 88-21124	-
LCV-BFW	BFW	STEAM DRUM LEVEL	3	GBV	125,700	3" ANSI 150#-RF	72	4"	<70	3"	110	232	MASONEILAN 88-21124	-
LCV-CBD	CBD	CBD VESSEL LEVEL	1	GBV	19,300	2" ANSI 150#-RF	19	2"	<70	2"	208	117	MASONEILAN 88-21124	-
LCV-FWD	FWD	FEEDWATER OVERFLOW	1	GBV	212,500	8" ANSI 150#-RF	19	8"	<70	3"	110	855	MASONEILAN 88-21124	-
PCV-SVS	SVS	SVS STEAM PRV	1	GBV	193,000	8" ANSI 150#-RF	375	10"	<85	NONE	-	1277	MASONEILAN 38-41535	-
PCV-AUX	AUX	AUX STEAM PRV	1	GBV	34,600	3" ANSI 150#-RF	67	4"	<85	3"	100	278	MASONEILAN 88-41535	KN#1
PCV-RV	SVS	SVS RELIEF VENT	1	GBV	192,000	8" ANSI 150#-RF	415	10"	<85	NONE	-	981	MASONEILAN 88-41515	KN#3
PCV-LPS	LPS	AUX HEATING STEAM PRV	1	GBV	288	1½" ANSI 150#-RF	8.4	1½"	<85	NONE	-	149	MASONEILAN 525	-
FCV-BFR	BFR	FEEDWATER RETURN	3	GBV	38,000	2" ANSI 150#-RF	6	2"	<70	NONE	-	117	MASONEILAN 88-21114	-

STEAM VENT SILENCER

UNIT TAG	SERVICE	FLOW PPH	INLET			SILENCER SIZE	PD PSI	MINIMUM DIL, DB (@ 1OOO FPM)								OPER WT LBS	MFR & MODEL NO.	REMARKS
			PSIG	°F	SIZE			62.5	125	250	500	1K	2K	4K	8K			
VS-1	SVS	192,000	275	417°	16"	45"Ø x 239"H	2.6	18	28	41	53	60	59	53	50	4,500	MAXIM 54 VT-32P	ASME, KN#7,11

FLASH TANKS

UNIT TAG	SERVICE	TYPE	TANK		MAWP PSIG	RATED °F	OPERATING		INLET		FLASH LPS		OUTLET SIZE	DRAIN SIZE	OPER WT LBS	MFR & MODEL NO.	REMARKS
			GAL	SIZE			PSIG	°F	PPH	SIZE	PPH	SIZE					
CBT-1	CBD	FLASH ECONOMIZER	-	16"Øx48"H	150	350°	7	232°	7,311	6"	1,788	6"	-	2"	880	CEMLINE V40FST	U STAMP
IBT-1	IBD	BLOWOFF TANK	520	54"Øx72"H	125	350°	0	212°	-	2"	-	10"	4"	2"	4,700	CEMLINE V620BOT	U STAMP, NATIONAL BOARD SIZING, KN#9,11

CHEMICAL TANKS

UNIT TAG	CHEMICAL	TYPE	TANK GAL	MAWP PSIG	RATED °F	PACKAGE SIZE	FEED PUMPS		TANK WT LBS	OPER WT LBS	MFR & MODEL NO.	REMARKS
							QTY	TAG				
TK-1	SULFITE	CHEMICAL MIXING	100	0	150°	36"Øx61"H	1	CFP-1	220	1060	BRYAN STEAM BCFS SERIES	TANK/PUMP PACKAGE WITH CONTROLS, KN#10,11
TK-2	FILMING AMINE	CHEMICAL MIXING	100	0	150°	36"Øx61"H	2	CFP-2A, 2B	220	1060	BRYAN STEAM BCFS SERIES	TANK/PUMP PACKAGE WITH CONTROLS, KN#10,11
TK-3	PHOSPHATE	CHEMICAL MIXING	100	0	150°	36"Øx61"H	2	CFP-3A, 3B	220	1060	BRYAN STEAM BCFS SERIES	TANK/PUMP PACKAGE WITH CONTROLS, KN#10,11
TK-4	NL-90	CHEMICAL MIXING	100	0	150°	36"Øx61"H	2	CFP-4A, 4B	220	1060	BRYAN STEAM BCFS SERIES	TANK/PUMP PACKAGE WITH CONTROLS, KN#10,11

SOUND ATTENUATORS

UNIT TAG	CFM	FAN / SERVICE	TYPE	LENGTH	SIZE	BANK QTY		APD	MINIMUM DIL, DB (@ 1000 FPM)								OPER WT LBS	MFR & MODEL NO.
						WIDE	HIGH		62.5	125	250	500	1K	2K	4K	8K		
ST-1, 2, 3	28,000	DRAFT FAN	DUCT	7'	24"W x 48"H	1	2	0.27"	7	15	25	37	32	18	18	14	480	IAC 7 UGLFL
ST-4	1,200	RTU-1 SUPPLY	DUCT	3'	18"W x 12"H	1	1	0.05"	3	9	16	25	26	20	13	10	35	IAC 3 UGLFL
ST-5,6	600	RTU-1 RETURN	DUCT	3'	12"Ø	1	1	0.02"	1	3	9	11	15	15	9	9	40	IAC 12 NL

AIR OUTLETS AND INLETS

UNIT TAG	FUNCTION	SURFACE TYPE	FACE TYPE	MOUNT TYPE	RATED CFM	RATED APD	RATED NC	NECK SIZE	FRAME SIZE	BRANCH DUCT SIZE	BLOW	MFR & MODEL NO.	REMARKS
CD1	SUPPLY	CEILING	PERFORATED	LAY-IN	300	0.10"	<30	10"x10"	24"x24"	10"Ø	4-WAY	TITUS PAS	CONTROL ROOM
RR1	RETURN	CEILING	PERFORATED	LAY-IN	600	0.10"	<30	14"x14"	24"x24"	12"Ø	NA	TITUS PAR	CONTROL ROOM
ER1	EXHAUST	CEILING	EGG CRATE	CEILING	120	0.10"	<30	6"x6"	8"x8"	6"x6"	NA	TITUS 50F	TOILET ROOM

SAFETY RELIEF VALVES

UNIT TAG	SERVICE	EQUIPMENT	QTY	FLUID	SET PSIG	CAPACITY		TEMP °F	SIZE INxOUT	ORIFACE SIZE	OPER WT LBS	MFR & MODEL NO.	REMARKS
						PPH	MBH						
SRV-1A	HPS	SB-1,2,3	1 EA	STEAM	500	66K	NA	470°	4"x6"	L	220	CONSOLIDATED 1910-00LT	KN#5
SRV-1B	HPS	SB-1,2,3	1 EA	STEAM	515	66K	NA	473°	4"x6"	L	220	CONSOLIDATED 1910-00LT	KN#5
SRV-2	SVS	SVS EDUCTORS	1	STEAM	302	252K	NA	430°	6"x10"	R	550	CONSOLIDATED 1912-00RT	-
SRV-3	LPS	DEAERATOR	1	STEAM	30	49,485	NA	331°	8"x10"	T	620	CONSOLIDATED 1905-00TC	KN#6
SRV-4	LPS	SB-4	1	STEAM	30	206	NA	274°	1½"x2"	-	8	CONSOLIDATED 1905-00DC	-
SRV-5	LPS	CBT-1	1	STEAM	150	48K	NA	375°	4"x6"	P	260	CONSOLIDATED 1905-00PC	-
SRV-6	NH3	STORAGE TANK	2	NH3	265	2,538	NA	AMB	¾"x1"	-	-	HANSEN 5632R	-
SRV-7	NH3	SCR SYSTEM	1	NH3	100	188	NA	AMB	½"x¾"	-	-	HANSEN 5600R	KN#8

STEAM TRAPS

UNIT TAG	SERVICE	TYPE	RUNNING LOAD PPH	WARM-UP LOAD PPH	QTY	DESIGN LOAD EACH PPH	TRAP ΔP PSID	RATED PSIG	DESIGN TEMP	TRAP LINE SIZE	HPC PIPE SIZE	OPER WT LBS	MFR & MODEL NO.	REMARKS
T-1A,1B	SVS	TD	36	324	TWO	360	200	600	500°F	¾"	¾"	2.2	SPIRAX SARCO TD42H	TRAP ENDS OF HEADER
T-2	SVS	TD	0	632	ONE	1350	200	600	500°F	¾"	¾"	2.2	SPIRAX SARCO TD42H	-

DUCT AIR LEAK TESTING (DALT)

SYSTEM TAG	SERVICE	PRESSURE CLASS	DUCT TYPE	SEAL CLASS	LEAK CLASS	DALT?	TEST PRESSURE "WG	MAXIMUM LEAKAGE CFM/100 SF	REMARKS
RTU-1	SUPPLY	+2"	ROUND	C	6	NO	-	-	
RTU-1	SUPPLY	+2"	RECTANGULAR	A	12	YES	2.0"	21.6	
RTU-1	RETURN	-1"	ROUND	C	12	NO	-	-	
RTU-1	RETURN	-1"	RECTANGULAR	A	24	YES	1.0"	24.0	
TEF	EXHAUST	-1"	ROUND	C	12	NO	-	-	
TEF	EXHAUST	-1"	RECTANGULAR	A	24	NO	-	-	

REFRIGERANT SAFETY DATA

SYSTEM	RTU-1
REFRIGERANT TYPE:	HFC-410A ("PURON")
REFRIGERANT CHARGE:	SEE SCHEDULE
REFRIGERANT SAFETY GROUP:	GROUP A1
REFRIGERANT OCCUPANCY CLASSIFICATION:	COMMERCIAL
BUILDING OCCUPANCY GROUP:	GROUP B
SYSTEM PROBABILITY:	HIGH
SYSTEM APPLICATION:	RULE 2
MAXIMUM PERMISSIBLE DENSITY:	9.4 LBS./1OOO CUBIC FEET
ROOM VOLUME:	SEE SCHEDULE
MAXIMUM PERMISSIBLE CHARGE:	SEE SCHEDULE

SHEET NOTES

1. SEE SHEET M601 AND M603 FOR ADDITIONAL EQUIPMENT AND PIPE SCHEDULES.

KEY NOTES

1. INSTALL 6" AND 10" LO-DB CARTRIDGE AT VALVE OUTLET WITH APPROPRIATE TAPERED REDUCERS. INSTALL SCH 80 PIPE AT VALVE OUTLET.
2. INSTALL METER HEAD AT 45° OR 90° FROM VERTICAL TO AVOID HEATING ELECTRIC ENCLOSURE WHERE FLUID TEMPERATURE IS GREATER THAN 300°F.
3. ACOUSTIC PERFORMANCE INCLUDES EFFECT OF SILENCER.
4. FLOW METER SELECTIONS ARE FOR REFERENCE ONLY. FINAL SELECTION SHALL BE RESPONSIBILITY OF BOILER AND BURNER MFR SUBJECT TO REVIEW AND APPROVAL BY GOVERNMENT.
5. FINAL SELECTION OF BOILER SAFETY RELIEF VALVES SHALL BE THE RESPONSIBILITY OF BOILER MFR.
6. FINAL SELECTION OF DEAERATOR SAFETY RELIEF VALVE SHALL BE THE RESPONSIBILITY OF BOILER MFR.
7. SUPPORT AND BRACE SILENCER AT MID-HEIGHT WITH MFR STANDARD GUSSETED BRACKETS BOLTED TO STRUCTURAL STEEL FRAMING AT ROOF LEVEL.
8. FINAL SELECTION OF AMMONIA SAFETY RELIEF VALVE SHALL BE THE RESPONSIBILITY OF BOILER MFR BASED ON Cv SELECTION OF UPSTREAM VALVES AND REGULATORS, OR EXCESS FLOW VALVE LIMIT.
9. BASIS OF DESIGN IS FOUR LEGS.
10. FINAL SELECTION OF CHEMICAL FEED SYSTEM SHALL BE THE RESPONSIBILITY OF BOILER MFR. TO MEET BOILER CHEMISTRY PROGRAM.
11. SUBMIT NATIONAL BOARD REGISTRATION AND ASME MANUFACTURER'S DATA REPORT FOR PRESSURE VESSELS
12. EMERGENCY EYE WASHS AND SHOWERS: COMPLY WITH ANSI Z358.1.
13. COMBINATION SHOWER AND EYE WASH: HYDRODYNAMIC SHOWER HEAD WITH INTEGRAL 20 GPM FLOW CONTROL, SS EYE WASH BOWL & YOKE, ABS PLASTIC EYE WASH ANIT-SURGE HEADS WITH INTEGRAL FLOW CONTROLS AND DUST COVERS, CHROME-PLATED BRASS STAY-OPEN SHOWER, AUTOMATIC THERMAL ACTUATOR FREEZE PROTECTION BLEED VALVE, UNIVERSAL SIGN,

PLUMBING FIXTURES

TAG	DESCRIPTION	ROUGH-IN PIPE SIZE				MFR & MODEL NO.
		WASTE	VENT	DCW	DHW	
WC-1	WATER CLOSET, ADA COMPLIANT, WALL MOUNT 1.28 GPF MANUAL FLUSHVALVE OPEN FRONT SEAT, HEAVY DUTY	3 - -	2" - -	- - 1"	- - -	ZURN #Z5615.214 ZURN #Z6000PL-HET ZURN #Z5950
L-1	WHEELCHAIR LAVATORY, 4" CENTERS CENTERSET FAUCET, GOOSENECK SPOUT WRIST BLADE HANDLES, GRID DRAIN 0.5 GPM AERATOR	1¼" -	1" -	- ½"	- ½"	AMERICAN. STD. #9141.011 AMERICAN. STD. #7502.175 (MONTERREY)
SH-1	SHOWER, ADA COMPLIANT, HAND HELD, 1.5 GPM	-	-	½"	½"	AMERICAN. STD. #1662.211
SK-1	SAMPLING SERVICE SINK WITH DRAIN BOARD	2"	1½"	½"	½"	ELKAY #ESS4824RW8C
EW-1	EMERGENCY EYE WASH, FREE STANDING, ADA	1¼"	-	½"	-	HAWS #7361BTWC (12)
ESH-1	EMERGENCY EYE WASH & SHOWER (13)	1¼"	-	1¼"	-	HAWS #8300.158 (12)
FD-1	SHOWER DRAIN, SQUARE HEAD, CI BODY	2"	1½"	-	-	ZURN #FD2254-NH2-CS4-CP
FD-2	FLOOR DRAIN WITH INDIRECT WASTE FUNNELS	3"	1½"	-	-	ZURN #Z586
FD-3	FLOOR DRAIN WITH INDIRECT WASTE FUNNELS	3"	1½"	-	-	ZURN #

REGISTERED PROFESSIONAL ENGINEER MICHAEL S. CALLAHAN No. M21188 MECHANICAL STATE OF CALIFORNIA

ZONE	LETTER	DESCRIPTION	DRAWN	DATE	APPRVD
		REVISIONS			

DRAWN J.HO	DATE	Ames Research Center Moffett Field, California
DESIGNED M.CALLAHAN	DATE	
CHECKED P.YALLOURIS	DATE	REPLACE ARC JET COMPLEX SVS BOILER MECHANICAL
A&E PM G.HITE	DATE	
NASA PM W.LEE	DATE	EQUIPMENT SCHEDULES
REQUESTER G.RAICHE	DATE	
R&QA	DATE	
SAFETY/PSM D.FRASER	DATE	SIZE D · CAGE CODE 25307 · A 231-1300-M602 · REV
SUPERVISOR S.FRANKEL	DATE	SCALE — · INDEX · SHEET OF

FILE NAME: 231-M602.DWG 12/12/12

DWG: R:\234\60212932.0001 (K11027) Replace Arc-Jet Complex SVS Boiler Final Design\500 CAD\MSheet\231-M602_SCHEDULES.dwg Version: 18.1s (LMS Tech) User: jlho
DATE: Feb 01, 2013 - 12:50:59 pm

CL150 PIPE SYSTEM MATERIAL SCHEDULE

COMPONENT	ITEM DESCRIPTION	PIPE SIZE < 2½"	PIPE SIZE 2½" - 24"	REMARKS
PIPE	SCHEDULE ASTM SPEC TYPE	SCH 80 A106, GR B SEAMLESS	SCH 40 (0.375" >10") A106 O/R A53, GR B SEAMLESS	
FITTINGS	TYPE ASTM SPEC ASME/ANSI STANDARD RATING BRANCH UNION	SOCKET WELD A105 B16.11 3000 PSI TEE MSS SP-83	BUTT WELD A234 WPB B16.9, B16.28 STANDARD TEE, WELDOLET NOT ALLOWED	THREADED FITTINGS FOR HWS & HWR
FLANGES	TYPE CLASS ASTM SPEC ASME/ANSI STANDARD GASKET	SOCKET WELD CLASS 150 RF A105 B16.5 1/8"	WELDING NECK CLASS 150 RF A105 B16.5 1/8"	
VALVES	CLASS TYPE TRIM MATERIAL BONNET/COVER	CLASS 150 SOCKET WELD KN#9 BOLTED	CLASS 150 FLANGED KN#9 BOLTED	8

CL300 PIPE SYSTEM MATERIAL SCHEDULE

COMPONENT	ITEM DESCRIPTION	PIPE SIZE < 2½"	PIPE SIZE 2½" - 18"	REMARKS
PIPE	SCHEDULE ASTM SPEC TYPE	SCH 80 A106, GR B SEAMLESS	SCH 40 A106, GR B SEAMLESS	
FITTINGS	TYPE ASTM SPEC ASME/ANSI STANDARD RATING BRANCH UNION	SOCKET WELD A105 B16.11 3000 PSI TEE MSS SP-83	BUTT WELD A234 WPB B16.9, B16.28 STANDARD TEE, WELDOLET NOT ALLOWED	
FLANGES	TYPE CLASS ASTM SPEC ASME/ANSI STANDARD GASKET	SOCKET WELD CLASS 300 RF A105 B16.5 1/8"	WELDING NECK CLASS 300 RF A105 B16.5 1/8"	
VALVES	CLASS TYPE TRIM MATERIAL BONNET/COVER	CLASS 300 SOCKET WELD STELLITED BOLTED	CLASS 300 FLANGED STELLITED BOLTED	8

CL600 PIPE SYSTEM MATERIAL SCHEDULE

COMPONENT	ITEM DESCRIPTION	PIPE SIZE < 2½"	PIPE SIZE 2½" - 6"	REMARKS
PIPE	SCHEDULE ASTM SPEC TYPE	SCH 80 A106, GR B SEAMLESS	STANDARD A106, GR B SEAMLESS	
FITTINGS	TYPE ASTM SPEC ASME/ANSI STANDARD RATING BRANCH UNION	SOCKET WELD A105 B16.11 3000 PSI TEE NO ALLOWED	BUTT WELD A234 WPB B16.9, B16.28 STANDARD TEE, WELDOLET NOT ALLOWED	
FLANGES	TYPE CLASS ASTM SPEC ASME/ANSI STANDARD GASKET	SOCKET WELD CLASS 600 RF A105 B16.5 1/8"	WELDING NECK CLASS 600 RF A105 B16.5 1/8"	
VALVES	CLASS TYPE TRIM MATERIAL BONNET/COVER	CLASS 600 SOCKET WELD STELLITED PSB	CLASS 600 BUTT WELD STELLITED PSB	8

VALVE MATERIAL SCHEDULE

VALVE TYPE	ITEM DESCRIPTION	PIPE SIZE < 2½"	PIPE SIZE 2½" - 6"	REMARKS
ALL VALVES	ASME/ANSI STANDARD ASTM SPEC	B16.34 A105	B16.34 A216, GR WCB	
GATE	TYPE SEAT DISC	OS&Y RENEWABLE SOLID	OS&Y RENEWABLE FLEXIBLE	
GLOBE	TYPE SEAT DISC	OS&Y RENEWABLE PLUG	OS&Y INTEGRAL PLUG	
CHECK	TYPE SEAT DISC	SILENT INTEGRAL SPRING	OS&Y RENEWABLE SWING	

SHEET NOTES

1. CONSTRUCT, INSTALL AND TEST PIPE SYSTEM IN ACCORDANCE WITH PIPING CODE LISTED IN PIPE SYSTEM DATA TABLE.
2. SEE SHEET M604 FOR PIPE SUPPORT SCHEDULES.
3. SEE GENERAL NOTE ON SHEET G005 FOR DESIGN CRITERIA TO BE USED FOR SEISMIC AND WIND DESIGN OF PIPING.
4. SEE SECTION 22 00 00 FOR WASTE, VENT AND DOMESTIC WATER PIPING SPECIFICATIONS.
5. ALL FLANGES SHALL BE RAISED FACE TYPE, UON.
6. ALL VALVES SHALL BE STANDARD PORT, UON.

KEY NOTES

1. CRITICAL PIPING SYSTEMS INDENTIFIED IN THE PIPING SYSTEM DATA TABLE REQUIRE DYNAMIC PIPE STRESS ANALYSIS FOR DESIGN. REFER TO GENERAL NOTES FOR DYNAMIC ANALYSIS REQUIREMENTS.
2. SEISMIC DESIGN OF NON-CRITICAL PIPE SYSTEMS SHALL BE IN ACCORDANCE WITH ASCE 7-05 FOR THE Ip LISTED, AND MAXIMUM Rp=3.5. SEISMIC DESIGN OF PIPING MUST MEET THE ALLOWABLE STRESS LIMIT FOR OCCASSIONAL LOADS OF THE APPLICABLE BASE CODE LISTED (NOT B31.E).

   IN LIEU OF PERFORMING PIPE STRESS ANALYSIS FOR NON-CRITICAL PIPING, THE DESIGN-BY-RULE APPROACH OF ASME B31.9 APPENDIX B MAY BE USED, PROVIDED THE SEISMIC ACCELERATION USED TO DETERMINE MAXIMUM SPACING IN TABLE B-3.3.1 IS THE AMPLIFIED ACCELERATION USING THE AMPLIFICATION FACTOR OF ASCE 7 (EQUATION 13.3-1: 1+2Z/H) AT THE ELEVATION OF THE STRUCTURE TO WHICH THE NON-CRITICAL PIPING IS ATTACHED.

KEY NOTES (CONTINUED)

3. LOWEST MAXIMUM ALLOWABLE PRESSURE FOR EQUIPMENT CONNECTED TO THE PIPE SYSTEM.
4. SAFETY RELIEF VALVE SET PRESSURE ON PRESSURE ENERGY SOURCE FOR THE LISTED PIPING SYSTEM.
5. PUMP DEAD HEAD PRESSURE: MAXIMUM POSSIBLE PIPING PRESSURE, UNLESS A SAFETY RELIEF VALVE IS SET FOR A LOWER PRESSURE.
6. CODE REQUIRED TEST PRESSURE. MAINTAIN HYDROSTATIC TEST PRESSURE FOR 10 MINUTES MINIMUM. AFTER 10 MINUTES, PRESSURE MAY BE REDUCED TO DESIGN PRESSURE AS NEEDED TO CONDUCT LEAK EXAMINATIONS.
7. PIPING SYSTEM SPECIFICATION: REFER TO LISTED PIPE SYSTEM MATERIAL SCHEDULE ON M603 FOR COMPONENT REQUIREMENTS. SEE SPECIFICATIONS FOR ADDITIONAL REQUIREMENTS.
8. SEE VALVE MATERIAL SCHEDULE FOR ADDITIONAL REQUIREMENTS.
9. VALVE TRIM: STELLITED TRIM FOR STEAM, FEEDWATER AND BLOWDOWN PIPING. OTHERWISE, USE 13 CHROME.
10. LPS IS A MIX OF STEAM FROM AUX AND CBF. LPS PIPE SYSTEM ALSO INCLUDES SATURATED STEAM FROM THE AUXILIARY HEATING BOILER SB-4 AT 12 PSIG (BOILER SRV IS SET AT 15 PSIG) PRIOR TO REDUCTION TO 7 PSIG IN DEAERATOR.

PIPING SYSTEM DATA

PIPE SYSTEM	PIPE CODE	CRITICAL SYSTEM 1	OPERATING PSIG	OPERATING TEMP	PIPE DESIGN PSIG	PIPE DESIGN TEMP MIN	PIPE DESIGN TEMP MAX	SEISMIC Ip 2	MAWP PSIG 3	SRV PSIG 4	PUMP PSIG 5	TEST PSIG 6	PIPING CLASS 7	INSULATION TEMP CLASS	REMARKS
DOMESTIC COLD WATER (DCW)	CPC	-	60	60°F	80	32°F	85°F	1.0	80	80	135	105	-	-	
DOMESTIC HOT WATER (DHW)	CPC	-	60	120°F	80	32°F	145°F	1.0	80	80	135	105	-	F	
SANITARY WASTE AND VENT (W, V)	CPC	-	0	60°F	0	32°F	120°F	1.0	-	-	-	5	-	-	
INDUSTRIAL WASTE AND VENT (IW, IV)	CPC	-	0	140°F	0	32°F	165°F	1.0	-	-	-	5	-	-	
FUEL GAS, NATURAL (MPG)	NFPA 54	-	25	60°F	60	32°F	110°F	1.5	-	-	-	90	CL150	-	
REVERSE OSMOSIS WATER (RO)	B31.9	-	60	60°F	70	32°F	110°F	1.5	-	-	60	105	CL150	-	
SOFT COLD WATER (SCW)	B31.1	YES	60	60°F	70	32°F	110°F	1.5	150	70	135	105	CL150	-	
SOFT PREHEATED WATER (SPW)	B31.1	YES	60	120°F	75	32°F	145°F	1.5	75	75	92	115	CL150	E	PRE-HEATED MAKE-UP WATER
BOILER FEEDWATER PUMP SUCTION (BFS)	B31.1	YES	20	232°F	50	32°F	274°F	1.5	-	-	-	75	CL150	D	DEAERTOR SRV SET = 30 PSIG
BOILER FEEDWATER PUMP DISCHARGE (BFW)	B31.1	YES	570	235°F	800	32°F	300°F	1.5	-	-	753	1200	CL600	D	
BOILER FEEDWATER ECONOMIZER (BFE)	B31.1	YES	570	348°F	800	32°F	370°F	1.5	-	-	753	1200	CL600	D	
BOILER FEEDWATER RECIRCULATION (BFR)	B31.1	YES	22	235°F	800	32°F	300°F	1.5	-	-	-	1200	CL600	D	DEAERTOR SRV SET = 30 PSIG
BOILER FEEDWATER DRAIN (BFD)	B31.1	YES	21	232°F	50	32°F	274°F	1.5	-	-	-	75	CL150	D	DEAERTOR SRV SET = 30 PSIG
HIGH PRESSURE STEAM (HPS)	B31.1	YES	425	454°F	500	32°F	500°F	1.5	500	500/515	-	773	CL300	A	
SVS STEAM (SVS)	B31.1	YES	275	417°F	300	32°F	455°F	1.5	300	300	-	450	CL300	B	3°F SUPERHEAT AFTER SVS PRV
AUXILIARY LOW PRESSURE STEAM (AUX)	B31.1	YES	7	330°F	30	32°F	350°F	1.5	-	-	-	45	CL150	C	98°F SUPERHEAT AFTER LPS PRV
LOW PRESSURE STEAM (LPS)	B31.1	YES	7	317°F	30	32°F	350°F	1.5	30	30	-	45	CL150	C	SRV ON DEAERATOR 10
CONTINUOUS BLOWDOWN FLASH STEAM (CBF)	B31.1	YES	7	232°F	30	32°F	350°F	1.5	150	30	-	45	CL150	D	FLASH VESSEL STEAM
INTERMITTENT BLOWDOWN FLASH STEAM (IBF)	B31.1	-	0	212°F	14	32°F	250°F	1.5	125	0	-	21	CL150	D	BLOWDOWN TANK VENT TO ATMOSPHERE
HIGH PRESSURE CONDENSATE (HPC)	B31.1	YES	425	454°F	500	32°F	500°F	1.5	600	500/515	-	773	CL300	A	BLOWDOWN TANK VENT TO ATMOSPHERE
RELIEF VALVE DISCHARGE (RVD)	B31.1	YES	30	476°F	50	32°F	500°F	1.5	-	-	-	75	CL150	-	VENT TO ATMOSPHERE
BOILER BLOWDOWN (IBD, CBD)	B31.1	YES	425	454°F	500	32°F	500°F	1.5	500	500	-	773	CL300	A	INSULATE IBT FOR SAFETY ONLY
CHEMICAL FEED (CF1)	B31.1	-	22	80°F	30	32°F	130°F	1.5	-	-	22	45	CL150	-	PUMP INTEGRAL RELIEF VALVE
CHEMICAL FEED (CF2)	B31.1	YES	425	80°F	440	32°F	130°F	1.5	-	-	425	660	CL300	-	PUMP INTEGRAL RELIEF VALVE
HEATING WATER (HWS & HWR)	B31.9	-	40	170°F	60	32°F	195°F	1.0	100	60	40	90	CL150	F	THREADED FITTINGS
INSTRUMENT AIR (IA)	B31.9	-	110	85°F	130	32°F	135°F	1.5	135	130	-	180	CL150	-	CONNECT TO (E) INSTRUMENT AIR SYSTEM
SHOP AIR (A)	B31.9	-	115	85°F	135	32°F	135°F	1.0	150	135	-	180	CL150	-	CONNECT TO (E) N231 SHOP AIR SYSTEM
ANHYDROUS AMMONIA (NH3)	B31.3	YES	50	90°F	265	32°F	90°F	1.5	265	265	-	400	CL150	-	BULK NH3 FOR SCR

HYDROSTATIC TEST PRESSURE IS CORRECTED FOR AMBIENT TEMPERATURE.

INSULATE DRAINS AND VENTS FOR SAFETY ONLY (PERSONNEL PROTECTION) TO LIMIT SURFACE TEMPERATURE TO 140°F.

PIPING INSULATION

INSULATION TYPE	TEMP CLASS	FLUID TEMP	STEAM PSIG	PIPE SIZE 1/2"	PIPE SIZE 3/4"	PIPE SIZE 1"	PIPE SIZE 1-1/2"	PIPE SIZE 2"	PIPE SIZE 2-1/2"	PIPE SIZE 3"	PIPE SIZE 4"	PIPE SIZE 6"	PIPE SIZE 8"	PIPE SIZE 10"	PIPE SIZE 12"	PIPE SIZE 16"	REMARKS
				INSULATION THICKNESS, INCHES													
CALCIUM SILICATE	A	454°F	425	1.5"	1.5"	2"	2.5"	2.5"	3"	3"	3"	3"	3"	3"	3"	-	
	B	417°F	275	1.5"	1.5"	1.5"	2.5"	2.5"	3"	3"	3"	3"	3"	3"	3"	-	<3°F SUPERHEAT
	C	330°F	7	1.5"	1.5"	1.5"	1.5"	2.5"	2.5"	2.5"	2.5"	2.5"	2.5"	2.5"	2.5"	4"	<98°F SUPERHEAT, 16" LPS (24/7)
	D	232°F	7	1"	1"	1"	1.5"	1.5"	1.5"	1.5"	2"	2"	2"	2"	2"	-	
	E	<120°F	-	1"	1"	1"	1"	1"	1"	1"	1"	1.5"	1.5"	2"	2"	-	
FIBERGLASS	A	454°F	425	1.5"	1.5"	1.5"	2"	2.5"	2.5"	2.5"	2.5"	3"	3"	3"	3"	-	
	B	417°F	275	1.5"	1.5"	1.5"	2"	2.5"	2.5"	2.5"	2.5"	2.5"	2.5"	2.5"	2.5"	-	<3°F SUPERHEAT
	C	330°F	7	1.5"	1.5"	1.5"	1.5"	1.5"	1.5"	2"	2.5"	2.5"	2.5"	2.5"	2.5"	4"	<98°F SUPERHEAT, 16" LPS (24/7)
	D	232°F	7	1"	1"	1"	1"	1"	1.5"	1.5"	1.5"	1.5"	2"	2"	2"	-	
	E	<120°F	-	1"	1"	1"	1"	1"	1"	1"	1"	1"	1"	1.5"	1.5"	-	
	F	-	-	SEE TITLE 24, TABLE 123-A													
PERSONNEL PROTECTION (CS)	A	454°F	425	2"	2"	2"	2"	2.5"	2.5"	2.5"	2.5"	3"	3"	3"	3.5"	-	
	B	417°F	275	1.5"	2"	2"	2"	2"	2"	2.5"	2.5"	2.5"	2.5"	3"	3"	-	
	C	330°F	7	1.5"	1.5"	1.5"	1.5"	1.5"	1.5"	2"	2"	2"	2"	2"	2"	-	
	D,E,F	<233°F	7	1"	1"	1"	1"	1"	1"	1"	1"	1"	1"	1"	1"	1"	
PERSONNEL PROTECTION (FG)	A	454°F	425	1.5"	1.5"	1.5"	2"	2"	2"	2"	2"	2.5"	2.5"	2.5"	2.5"	-	
	B	417°F	275	1.5"	1.5"	1.5"	1.5"	1.5"	1.5"	2"	2"	2"	2.5"	2.5"	2.5"	-	
	C	330°F	7	1"	1"	1"	1"	1"	1"	1.5"	1.5"	1.5"	1.5"	1.5"	1.5"	-	
	D,E,F	<233°F	7	1"	1"	1"	1"	1"	1"	1"	1"	1"	1"	1"	1"	1"	

PIPE SUPPORT SCHEDULE

TAG	SERVICE	SHEET	DETAIL REF.	TAG	SERVICE	SHEET	DETAIL REF.
201	HPS/SCW/SPW/MPG	M501	1	260	MPG	M509	2
202	HPS/SCW/SPW/MPG	M502	1	261	SCW/SPW/MPG	M509	3
203	HPS	M501	2	262	SCW/SPW	M512	4
204	HPS/LPS/BFW	M501	4	263	MU	M504	6
205	HPS/LPS/BFW	M501	4	264	SCW/SPW	M508	2
206	HPS/LPS/BFW	M501	4	265	SCW/SPW	M508	2
207	HPS/LPS/BFW	M501	5	266	SCW/SPW	M507	1
208	HPS/LPS/BFW	M501	5	267	SCW/SPW	M512	1
209	HPS/LPS/BFW	M501	5	268	MU/SCW/SPW	M512	2
210	HPS/LPS/BFW	M501	3	269	SCW/SPW	M512	3
211	HPS/LPS/BFW	M501	6	270	SCW/SPW	M509	4
212	CBD	M505	2	271	SCW/SPW	M508	1
213	IBD/CBD	M505	4	272	BFS/BFW	M514	1
214	CBD	M505	3	273	BFS	M515	1
215	CBD	M506	6	274	BFS/BFW	M515	3
216	CBD	M504	5	275	BFS/BFW	M513	3
217	CBD	M511	2	276	BFS	M513	4
218	CBD/BFR	M511	1	280	BFD	M513	1
219	IBD/CBD	M504	3	281	BFD	M513	2
220	IBD/CBD	M504	1	282	BFW	M513	5
221	CBD	M505	1	283	BFW	M513	6
222	IBD/CBD	M504	2	284	BFW	M513	7
223	CBD	M505	5	285	BFW	M516	4
224	CBD	M505	6	286	BFW	M516	2
225	CBD	M506	7	287	BFW	M514	2
226	SCW/SPW/BFR	M504	4	288	BFW	M514	3
227	CBD	M506	1	289	BFW	M516	3
228	CBD	M506	3	290	BFR	M516	1
229	HPS/CBD	M506	2	291	BFR	M517	1
230	IBD/CBD	M506	5	292	BFR	M517	2
231	CBD	M506	4	293	BFR	M517	3
232	HPS	M502	2	294	BFW	M515	2
233	HPS/SCW/SPW/MPG	M501	1	295	BFR	M517	4
234	HPS	M502	3	296	NH3	M518	4
235	LPS	M510	2	297	NH3	M518	4
236	HPS	M502	3	298	NH3	M518	4
237	HPS	M510	3	299	NH3	M518	4
238	HPS	M510	4	300	NH3, NH3 RVD	M518	4
239	CBD	M501	3	301	NH3	M518	4
240	SCW/SPW	M507	3	302	NH3	M518	4
241	HPS	M510	1	303	NH3	M518	4
242	HPS/LPS	M501	4	304	NH3 RVD	M518	4
243	CBD	M511	6	305	NH3	M518	4
244	CBD	M511	5	306	NH3	M518	4
245	CBD	M511	3	307	NH3	M518	4
246	CBD	M511	4				
247	CBD	M511	7				
248	HPS/LPS	M501	5				
249	HPS	M501	7				
250	(E) SVS	M510	5				
251	MPG	M508	1				
252	MPG	M508	2				
253	MPG	M508	3				
254	MPG	M509	1				
255	MPG	M508	4				
256	MPG	M508	5				
258	MPG	M507	2				
259	MPG	M507	4				

REGISTERED PROFESSIONAL ENGINEER MICHAEL S. CALLAHAN No. M21188 MECHANICAL STATE OF CALIFORNIA

ZONE	LETTER	DESCRIPTION	DRAWN	DATE	APPRVD

REVISIONS

DRAWN J.HO	DATE	Ames Research Center Moffett Field, California
DESIGNED M.CALLAHAN	DATE	
CHECKED P.YALLOURIS	DATE	REPLACE ARC JET COMPLEX SVS BOILER MECHANICAL
A&E PM G.HITE	DATE	
NASA PM W.LEE	DATE	PIPE SYSTEM AND INSULATION SCHEDULES
REQUESTER G.RAICHE	DATE	
R&QA	DATE	SIZE D · CAGE CODE 25307 · A 231-1300-M603 · REV
SAFETY/PSM D.FRASER	DATE	
SUPERVISOR S.FRANKEL	DATE	SCALE — · INDEX · SHEET OF

FILE NAME: 231-M603.DWG 12/12/12

DWG: R:\234A\80231202.0001 (K11027) Replace ArcJect Complex SVS Boiler Final Design\500 CAD\M\Sheet\231-M603_SCHEDULES.dwg Version: 18.1s (LMS Tech) User: jlho
DATE: Feb 01, 2013 - 12:51:08 pm

DWG NO.	SH.	REV
A231-1300-M701		

SHEET NOTES

1. SEE SHEET M601, M602 AND M603 FOR EQUIPMENT AND PIPE SCHEDULES.
2. REFER TO I&C DRAWINGS FOR ADDITIONAL INSTRUMENTATION AND CONTROLS INFORMATION.
3. PIPING DIAGRAMS: THESE DIAGRAMS ARE SCHEMATIC ONLY, AND DO NOT SHOW ALL PIPING COMPONENTS REQUIRED BY THE SPECIFICATIONS AND DRAWINGS FOR A COMPLETE SYSEM. PROVIDE A COMPLETE SYSTEM WHICH IS FUNCTIONAL IN ALL RESPECTS.

KEY NOTES

1. BYPASS BLEED VALVE ACROSS ISOLATION VALVE, TYPICAL. FOR HORIZONTAL ISOLATION VALVES, LOCATE BLEED VALVE BELOW ISOLATION VALVE.
2. LOW DB FLOW CARTRIDGE: CARBON STEEL HOUSING, STAGGERED 16-STAGE FLOW DIVIDING ELEMENTS, TYPE 304 SS GRIDS, SIZE AS SHOWN ON DIAGRAM. ALL PIPING BETWEEN CONTROL VALVE AND CARTRIDGE SHALL BE SCHEDULE 80. 4" CARTRIDGE Cv=66. 8" CARTRIDGE Cv=230.
3. METER RUN MINIMUM STRAIGHT PIPE LENGTHS. INCREASE STRAIGHT LENGTH TO ACCOUNT FOR ACTUAL CONFIGURATION WHERE NECESSARY PER MFR INSTRUCTIONS.
4. EXTEND ½" STRAINER BLOWOFF VALVE TO ACCESSIBLE LOCATION NEAR FUNNEL FLOOR DRAIN.
5. TEMPORARY FLANGE WELD TEST PLUG: EXPANSION SEAL TECHNOLOGIES. REMOVE AFTER HYDROSTATIC TEST.

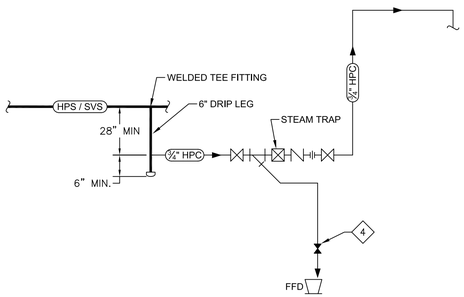

2 DIAGRAM - STEAM TRAP PIPING
M701 M701 SCALE: NONE

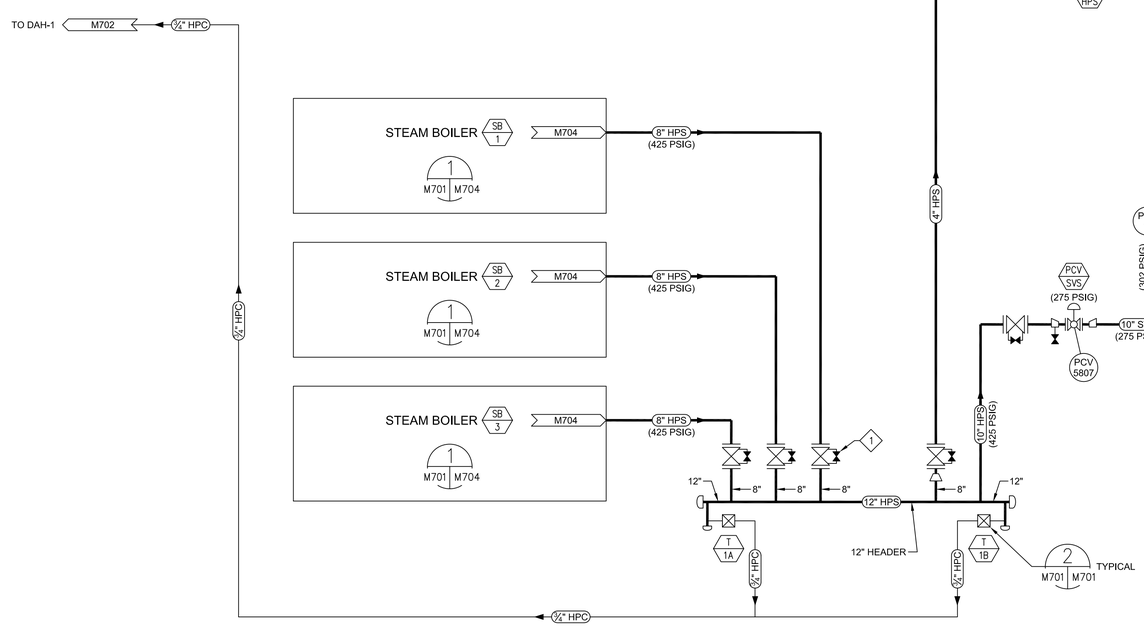

1 DIAGRAM - STEAM PIPING
-- M701 SCALE: NONE

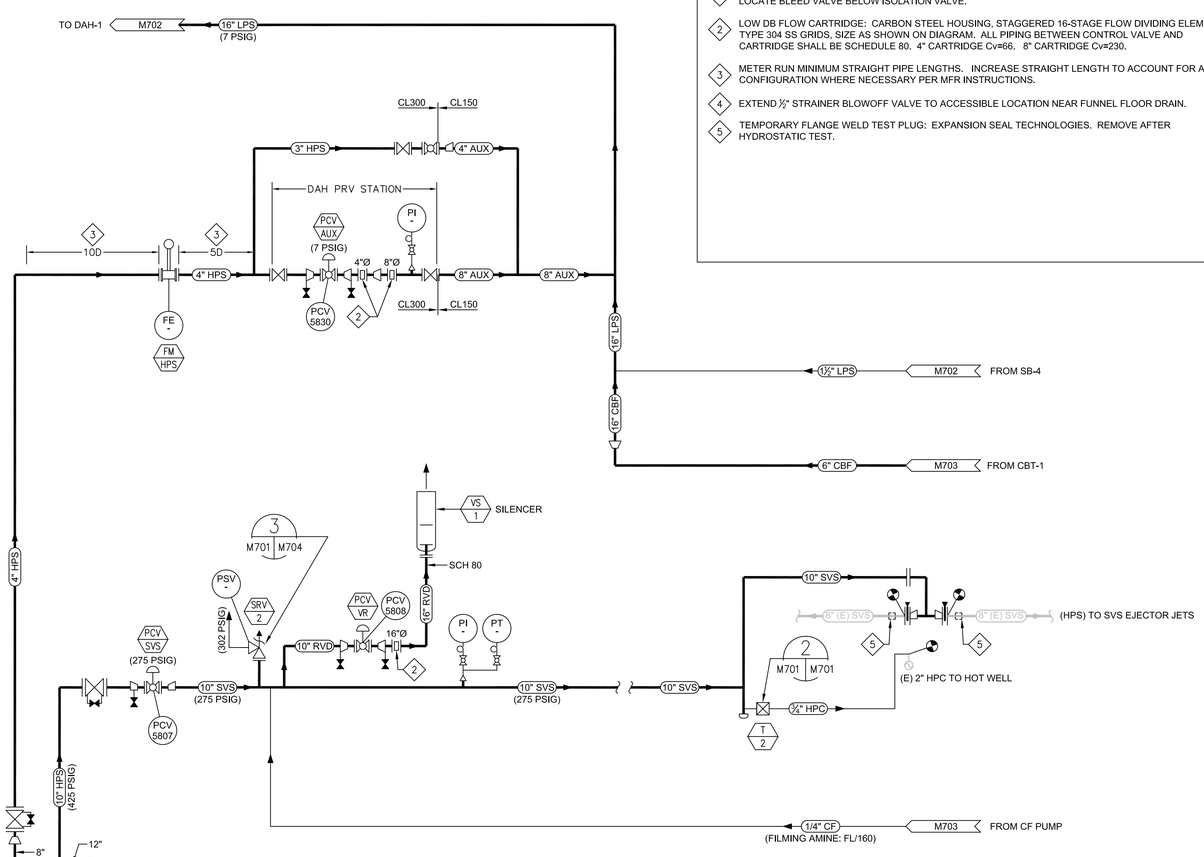

ZONE	LETTER	DESCRIPTION	DRAWN	DATE	APPRVD

REVISIONS

DRAWN J.HO	DATE
DESIGNED M.CALLAHAN	DATE
CHECKED P.YALLOURIS	DATE
A&E PM G.HITE	DATE
NASA PM W.LEE	DATE
REQUESTER G.RAICHE	DATE
R&QA	DATE
SAFETY/PSM D.FRASER	DATE
SUPERVISOR S.FRANKEL	DATE

REGISTERED PROFESSIONAL ENGINEER MICHAEL S. CALLAHAN No. M21188 MECHANICAL STATE OF CALIFORNIA

Ames Research Center
Moffett Field, California

REPLACE ARC JET COMPLEX SVS BOILER
MECHANICAL
DIAGRAM
STEAM PIPING

SIZE	CAGE CODE		REV
D	25307	A 231-1300-M701	
SCALE —		INDEX	SHEET OF

FILE NAME: 231-M701.DWG 12/12/12

DWG: R:\234A\60212932.0001 (K11027) Replace Arc-Ject Complex SVS Boiler Final Design\500 CAD\M\Sheet\231-M701_STEAM PIPING DIAGRAM.dwg Version: 18.1s (LMS Tech) User: jjho
DATE: Feb 01, 2013 - 12:51:19 pm

DWG NO.	SH.	REV
A231-1300-M702		

SHEET NOTES

1. SEE SHEET M601, M602 AND M603 FOR EQUIPMENT AND PIPE SCHEDULES.
2. REFER TO I&C DRAWINGS FOR ADDITIONAL INSTRUMENTATION AND CONTROLS INFORMATION.
3. PIPING DIAGRAMS: THESE DIAGRAMS ARE SCHEMATIC ONLY, AND DO NOT SHOW ALL PIPING COMPONENTS REQUIRED BY THE SPECIFICATIONS AND DRAWINGS FOR A COMPLETE SYSEM. PROVIDE A COMPLETE SYSTEM WHICH IS FUNCTIONAL IN ALL RESPECTS.

KEY NOTES

1. DEAERATOR HEATER HAS INTEGRAL INTERNAL VENT CONDENSER.
2. 2" DEAERATOR VENT ASSEMBLY WITH ORIFACE PLATE SIZED FOR DESIGN VENTING RATE.
3. WATER SOFTENING SYSTEM: SEE SPECIFICATIONS FOR PERFORMANCE REQUIREMENTS. SEE CONTROL DRAWING J701 FOR ASSOCIATED PIPING, INSTRUMENTATION AND CONTROLS. PIPE ALL DRAIN AND OVERFLOW LINES TO NEAREST FLOOR DRAIN.
4. METER RUN MINIMUM STRAIGHT PIPE LENGTHS. INCREASE STRAIGHT LENGTH TO ACCOUNT FOR ACTUAL CONFIGURATION WHERE NECESSARY PER MFR INSTRUCTIONS.
5. SAMPLE PORT
6. ANTI VORTEX DEVICE
7. FM APPROVED GAS TRAIN PER NFPA 85.

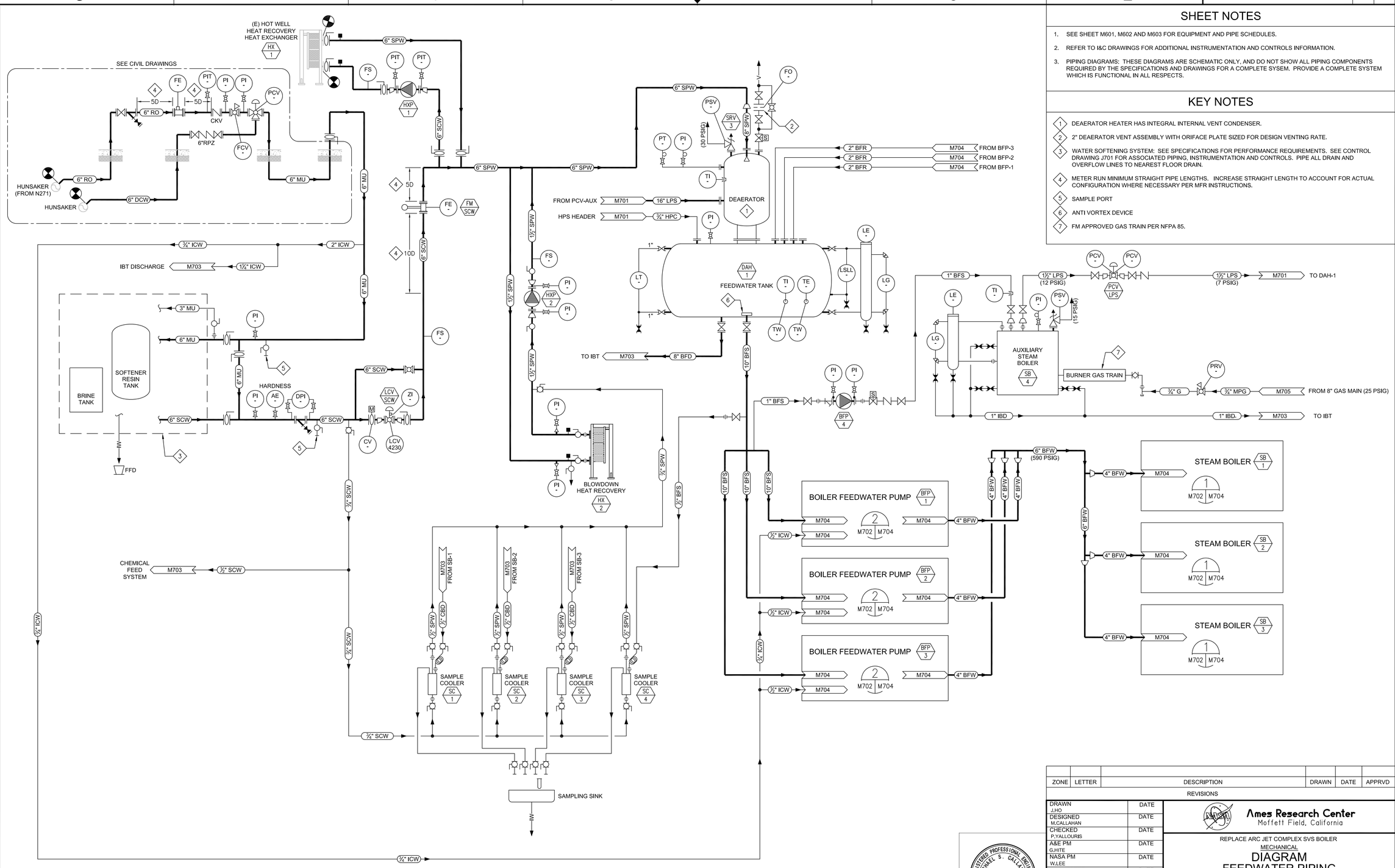

1 DIAGRAM - FEEDWATER PIPING
-- M702 SCALE: NONE

ZONE	LETTER	DESCRIPTION	DRAWN	DATE	APPRVD

REVISIONS

DRAWN J.HO	DATE
DESIGNED M.CALLAHAN	DATE
CHECKED P.YALLOURIS	DATE
A&E PM G.HITE	DATE
NASA PM W.LEE	DATE
REQUESTER G.RAICHE	DATE
R&QA	DATE
SAFETY/PSM D. FRASER	DATE
SUPERVISOR S.FRANKEL	DATE

REGISTERED PROFESSIONAL ENGINEER MICHAEL S. CALLAHAN No. M21188 MECHANICAL STATE OF CALIFORNIA

Ames Research Center
Moffett Field, California

REPLACE ARC JET COMPLEX SVS BOILER
MECHANICAL
DIAGRAM
FEEDWATER PIPING

SIZE	CAGE CODE		REV
D	25307	A 231-1300-M702	
SCALE —		INDEX	SHEET OF

FILE NAME: 231-M702.DWG 12/12/12

DWG: R:\234A\60212932.0001 (K11027) Replace ArcJect Complex SVS Boiler Final Design\500 CAD\MSheet\231-M702_FEEDWATER PIPING DIAGRAM.dwg Version: 18.1s (LMS Tech) User: jgho
DATE: Feb 01, 2013 - 12:51:27 pm

DWG NO.	SH.	REV
A231-1300-M703		

SHEET NOTES

1. SEE SHEET M601, M602 AND M603 FOR EQUIPMENT AND PIPE SCHEDULES.
2. REFER TO I&C DRAWINGS FOR ADDITIONAL INSTRUMENTATION AND CONTROLS INFORMATION.
3. PIPING DIAGRAMS: THESE DIAGRAMS ARE SCHEMATIC ONLY, AND DO NOT SHOW ALL PIPING COMPONENTS REQUIRED BY THE SPECIFICATIONS AND DRAWINGS FOR A COMPLETE SYSEM. PROVIDE A COMPLETE SYSTEM WHICH IS FUNCTIONAL IN ALL RESPECTS.

KEY NOTES

1. PROVIDE SECONDARY CONTAINMENT FOR ALL CHEMICAL TANKS AND PIPING, AND PREVENT RAINWATER ENTRY, TYPICAL. SEISMICALLY RESTRAIN TANKS, TYPCAL.
2. AUTOMATIC MODULATING CONTROL VALVE BY BOILER MANUFACTURER WITH ALLOY INTERNALS AND HARDENED TRIM. LOCATE AS CLOSE AS POSSIBLE TO BLOWDOWN TANK HEADER.

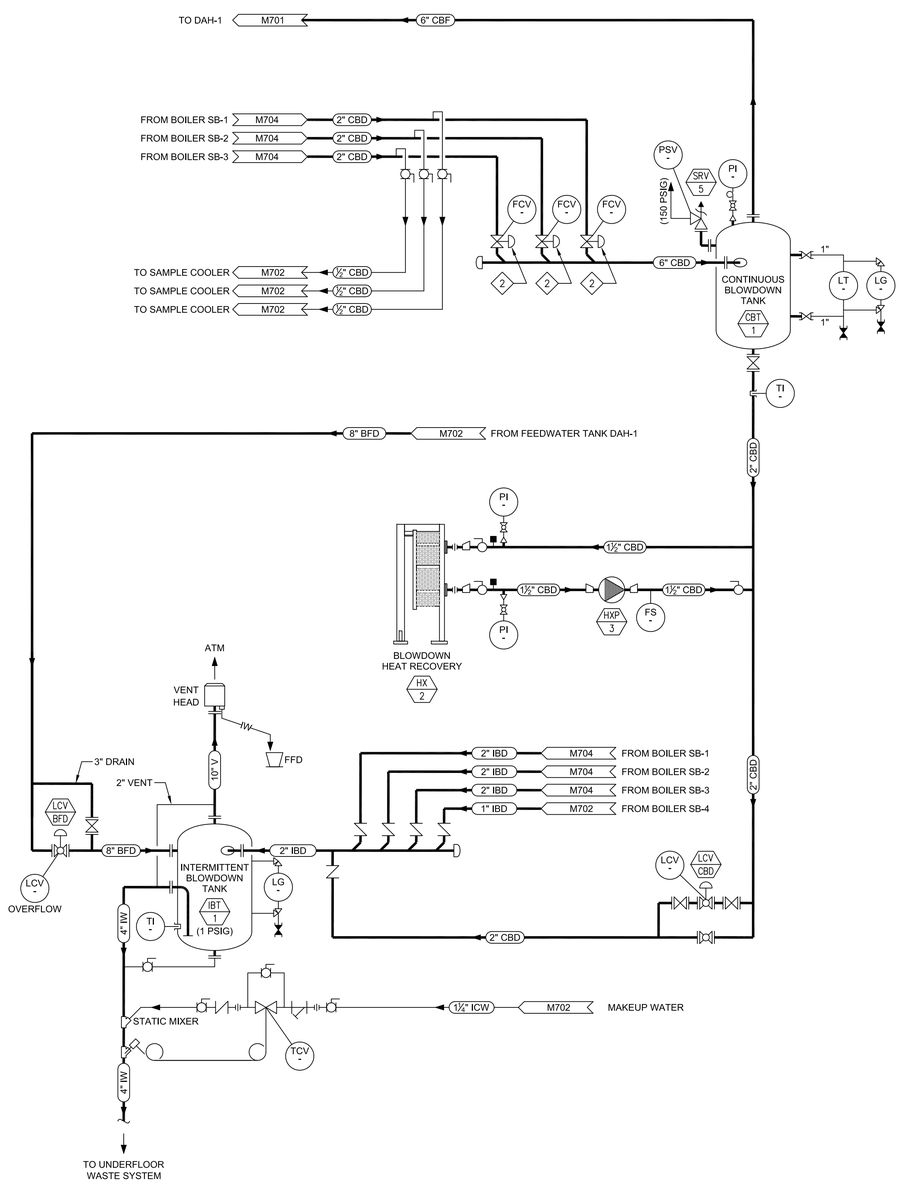

1 DIAGRAM - BLOWDOWN PIPING
-- M703 SCALE: NONE

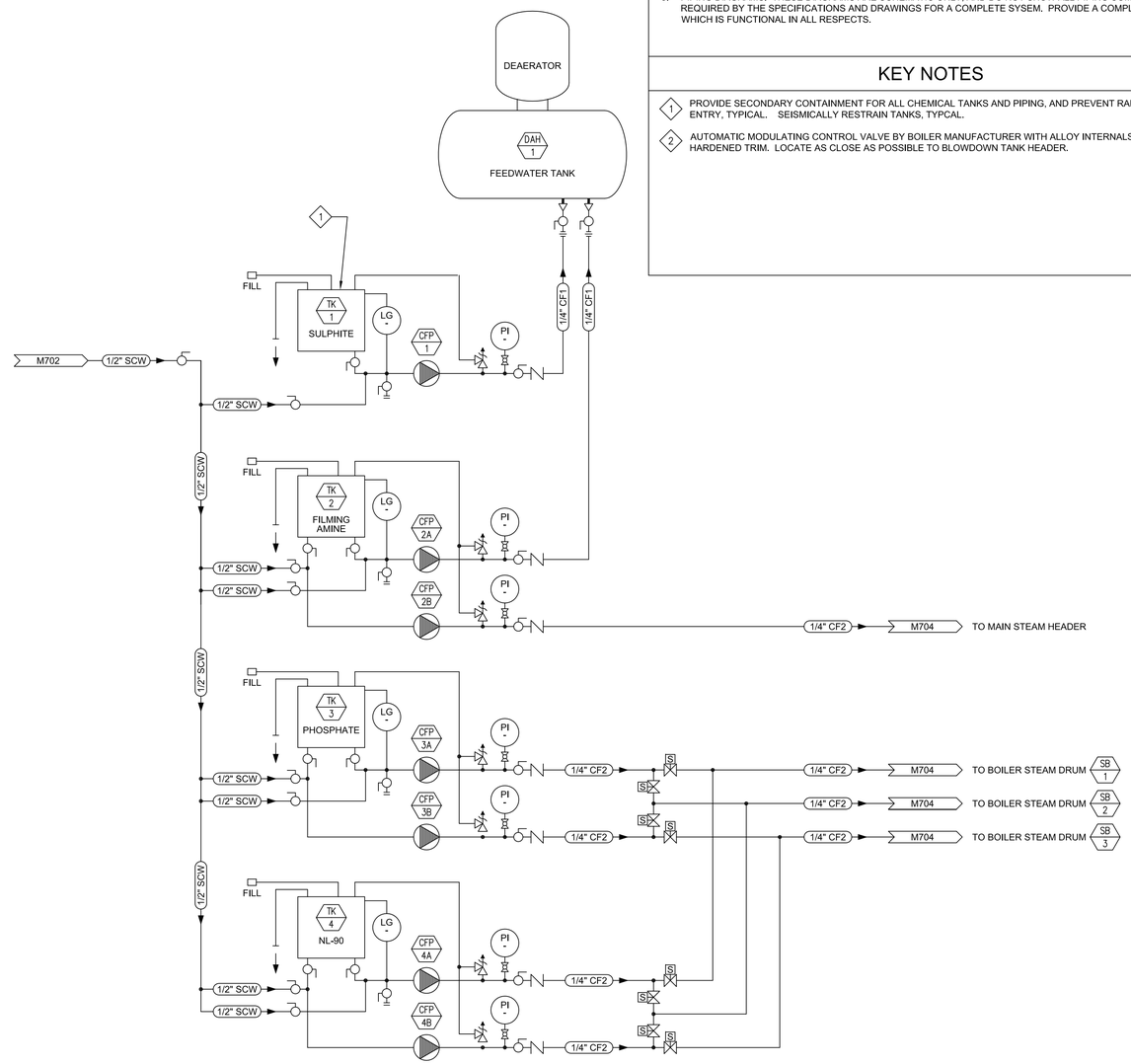

2 DIAGRAM - CHEMICAL FEED SYSTEM
-- M703 SCALE: NONE

ZONE	LETTER	DESCRIPTION	DRAWN	DATE	APPRVD

REVISIONS

DRAWN J.HO	DATE
DESIGNED M.CALLAHAN	DATE
CHECKED P.YALLOURIS	DATE
A&E PM G.HITE	DATE
NASA PM W.LEE	DATE
REQUESTER G.RAICHE	DATE
R&QA	DATE
SAFETY/PSM D.FRASER	DATE
SUPERVISOR S.FRANKEL	DATE

REGISTERED PROFESSIONAL ENGINEER MICHAEL S. CALLAHAN No. M21188 MECHANICAL STATE OF CALIFORNIA

Ames Research Center
Moffett Field, California

REPLACE ARC JET COMPLEX SVS BOILER
MECHANICAL
DIAGRAMS
BLOWDOWN & CHEMICAL FEED PIPING

SIZE	CAGE CODE		REV
D	25307	A 231-1300-M703	
SCALE —		INDEX	SHEET OF

FILE NAME: 231-M703.DWG 12/12/12

DWG: R:\234A\60212032.0001 (K11027) Replace Arcjet Complex SVS Boiler Final Design\500 CAD\MSheet\231-M703_BLOWDOWN AND CF PIPING DIAGRAM.dwg Version: 18.1s (LMS Tech) User: jjho
DATE: Feb 01, 2013 - 12:51:36 pm

DWG NO.	SH.	REV
A231-1300-M704		

SHEET NOTES

1. SEE SHEET M601, M602 AND M603 FOR EQUIPMENT AND PIPE SCHEDULES.
2. REFER TO I&C DRAWINGS FOR ADDITIONAL INSTRUMENTATION AND CONTROLS INFORMATION.
3. SEE SHEET G006 FOR A GENERAL DESCRIPTION OF EACH BID OPTION.

KEY NOTES

1. PIPE DRIP PAN DRAINS, ELBOW DRAINS, AND VALVE BODY DRAINS TO CLOSEST FUNNEL FLOOR DRAIN.
2. FM APPROVED GAS TRAIN WITH DOUBLE BLOCK AND VENT PER NFPA 85.
3. INSTALL STRAINERS FOR STEAM SERVICE WITH BASKET AND SCREEN HORIZONTAL.
4. PROVIDE LEAK DETECTION SYSTEM FOR ANHYDROUS AMMONIA STORAGE AND PROCESSING.
5. METER RUN MINIMUM STRAIGHT PIPE LENGTHS. INCREASE STRAIGHT LENGTH TO ACCOUNT FOR ACTUAL CONFIGURATION WHERE NECESSARY PER MFR INSTRUCTIONS.
6. TEMPORARY CONE STRAINER IN PIPE SPOOL. REMOVE AFTER CONSTRUCTION.
7. CAST STEEL FLANGED REDUCER FITTING. CLASS 600 FOR BFW. CLASS 150 FOR BFS.
8. LONG RADIUS ELBOW WITH DRAIN AT BASE.
9. INLET VANES WITH DAMPER MOTOR CONTROL.
10. DILUTION AIR BLOWER, TYPICAL OF TWO AT EACH STATION: 480V MOTOR
11. RELIEF VALVE DISCHARGE: EXTEND RVD 10' MINIMUM ABOVE CANOPY ROOF, TYPICAL UON. TERMINATE WITH FLOW BALANCING TEE AND MITER CUT OUTLETS, TYPICAL UON. PROVIDE PIPE GUIDE AT ROOF LEVEL USING STRUCTURAL FRAMING WITH TOTAL DIAMETRIC GAP OF 1/2" OR LESS, TYPICAL UON.
12. INSTALL AUXILIARY HEATING STEAM HEAT EXCHANGER IN MUD DRUM. BID OPTION 2: DESIGN AND INSTALL AUXILIARY HEATING STEAM SYSTEM TO UTILIZE HEAT EXCHANGER IN MUD DRUM FOR MAINTAINING BOILER TEMPERATURE ABOVE 250°F WHILE MAIN BURNERS ARE SHUT OFF.
13. CONTROL ELEMENT FURNISHED BY BOILER MFR.
14. STOP AND CHECK VALVE.
15. PIPING AND EQUIPMENT BY BOILER MFR.
16. BID OPTION #8: ANHYDROUS AMMONIA SUPPLY RACK AND MANIFOLD FOR CYLINDER STORAGE. SEE AMMONIA SYSTEM SAFETY NOTES ON SHEET M002.

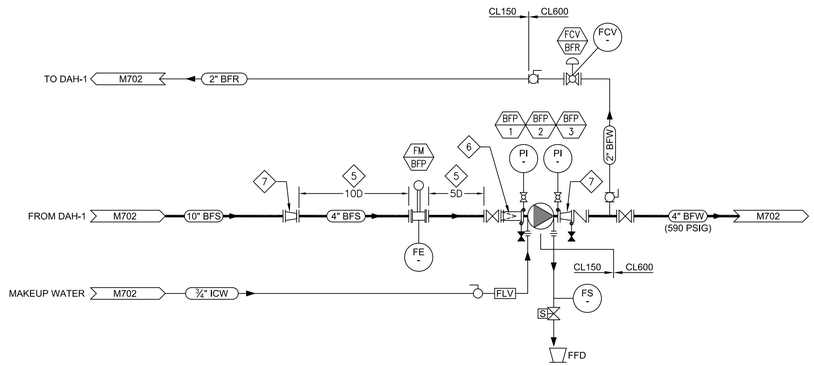

2 DIAGRAM - BOILER FEEDWATER PUMP PIPING
M704 SCALE: NONE

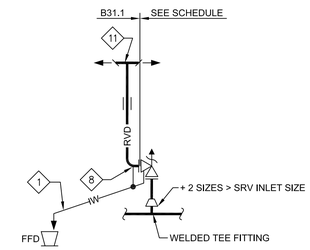

3 DIAGRAM - TYPICAL STEAM SRV PIPING
M704 SCALE: NONE

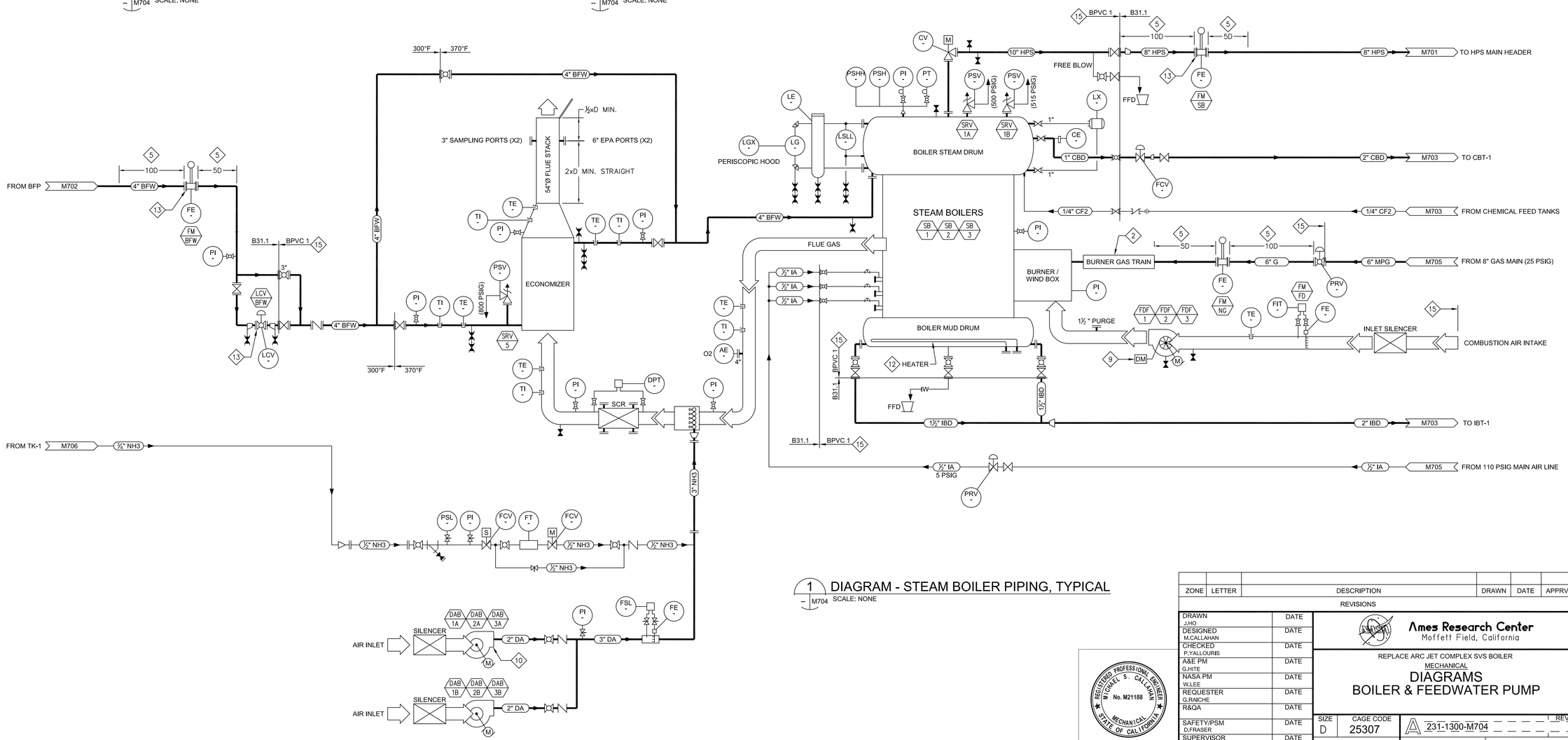

1 DIAGRAM - STEAM BOILER PIPING, TYPICAL
M704 SCALE: NONE

ZONE	LETTER	DESCRIPTION	DRAWN	DATE	APPRVD

REVISIONS

DRAWN J.HO	DATE
DESIGNED M.CALLAHAN	DATE
CHECKED P.YALLOURIS	DATE
A&E PM G.HITE	DATE
NASA PM W.LEE	DATE
REQUESTER G.RAICHE	DATE
R&QA	DATE
SAFETY/PSM D.FRASER	DATE
SUPERVISOR S.FRANKEL	DATE

REGISTERED PROFESSIONAL ENGINEER MICHAEL S. CALLAHAN No. M21188 MECHANICAL STATE OF CALIFORNIA

Ames Research Center
Moffett Field, California

REPLACE ARC JET COMPLEX SVS BOILER
MECHANICAL
DIAGRAMS
BOILER & FEEDWATER PUMP

SIZE	CAGE CODE	REV
D	25307	A

231-1300-M704

SCALE — INDEX SHEET OF

FILE NAME: 231-M704.DWG 12/12/12

DWG: R:\234A\60212032.0001 (K11027) Replace Arcjet Complex SVS Boiler Final Design\500 CAD\MSheet\231-M704_BOILER PIPING DIAGRAM.dwg Version: 18.1s (LMS Tech) User: jlho
DATE: Feb 01, 2013 - 12:51:44 pm

DWG NO.	SH.	REV
A231-1300-M705		

SHEET NOTES

1. SEE SHEET M601, M602 AND M603 FOR EQUIPMENT AND PIPE SCHEDULES.
2. REFER TO I&C DRAWINGS FOR ADDITIONAL INSTRUMENTATION AND CONTROLS INFORMATION.
3. PIPING DIAGRAMS: THESE DIAGRAMS ARE SCHEMATIC ONLY, AND DO NOT SHOW ALL PIPING COMPONENTS REQUIRED BY THE SPECIFICATIONS AND DRAWINGS FOR A COMPLETE SYSTEM. PROVIDE A COMPLETE SYSTEM WHICH IS FUNCTIONAL IN ALL RESPECTS.

KEY NOTES

1. DESIGN AND PROVIDE BRANCH PIPING AND SUPPORTS TO ALL PNEUMATIC CONTROL DEVICES IN VICINITY OF DESIGNATED EQUIPMENT, TYPICAL.
2. ½" PIPE TO SHOP AIR STATION OUTLET AS LOCATED ON PLAN, TYPICAL OF 5. PROVIDE SHUT-OFF VALVE, POINT-OF-USE FILTER AND QUICK-DISCONNECT COUPLING AT EACH STATION.
3. EMERGENCY EARTHQUAKE SHUT-OFF VALVE.
4. ABOVE GROUND PIPING THROUGH (E) SVS FACILITY.
5. METER RUN MINIMUM STRAIGHT PIPE LENGTHS. INCREASE STRAIGHT LENGTH TO ACCOUNT FOR ACTUAL CONFIGURATION WHERE NECESSARY PER MFR INSTRUCTIONS.
6. BY BOILER MANUFACTURER, TYPICAL.
7. INSTALL STRAINERS FOR NATURAL GAS SERVICE WITH BASKET AND SCREEN HORIZONTAL, TYPICAL.
8. 1" INSTRUMENT AIR FOR FUTURE CEMS: CFF, TYPICAL.

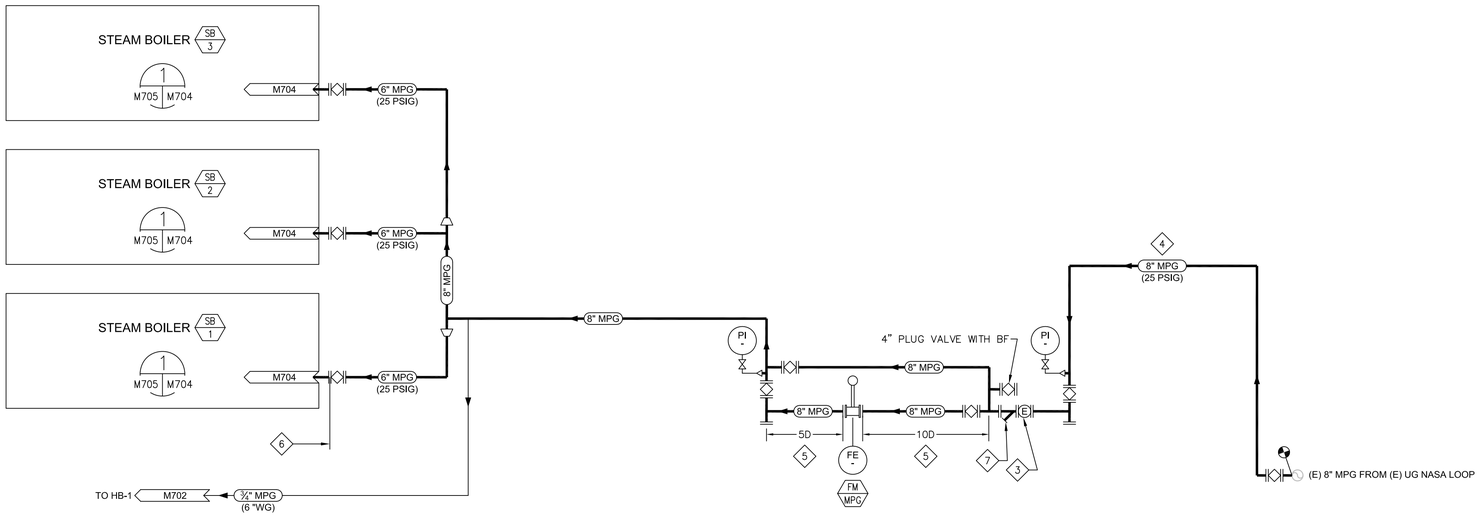

1 DIAGRAM - MEDIUM PRESSURE GAS PIPING
M705 SCALE: NONE

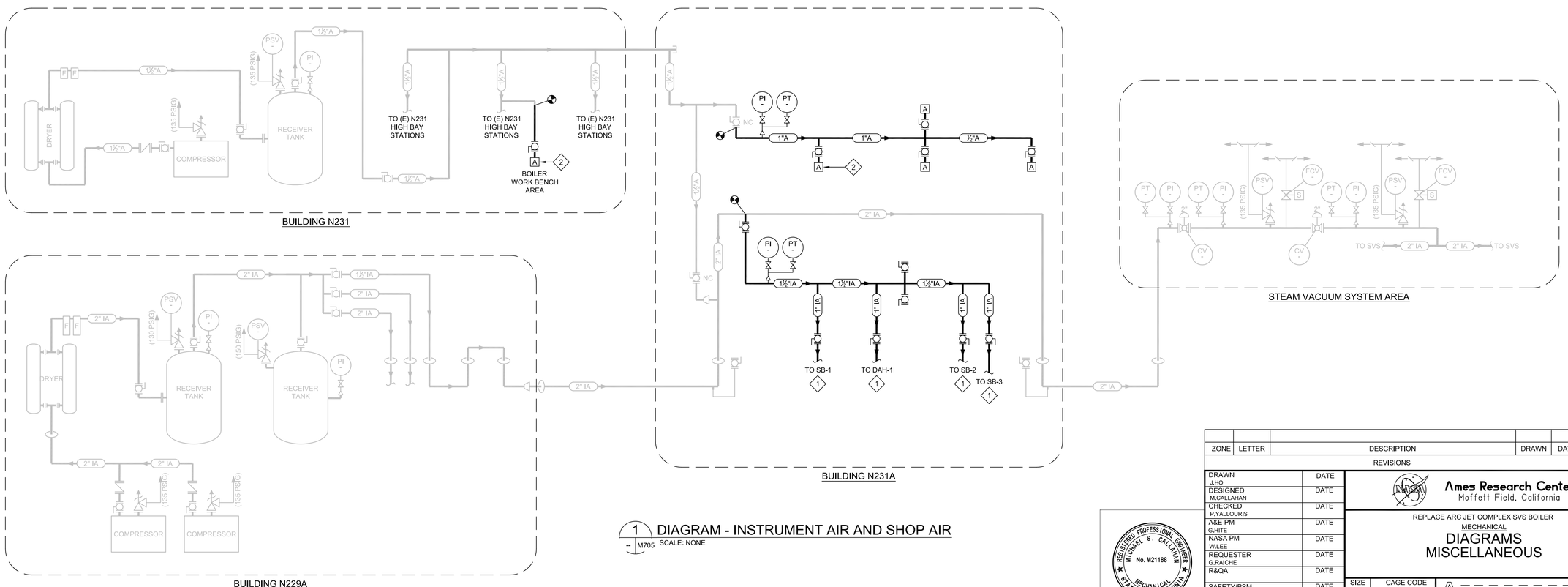

1 DIAGRAM - INSTRUMENT AIR AND SHOP AIR
M705 SCALE: NONE

ZONE	LETTER	DESCRIPTION	DRAWN	DATE	APPRVD

REVISIONS

DRAWN J.HO	DATE
DESIGNED M.CALLAHAN	DATE
CHECKED P.YALLOURIS	DATE
A&E PM G.HITE	DATE
NASA PM W.LEE	DATE
REQUESTER G.RAICHE	DATE
R&QA	DATE
SAFETY/PSM D.FRASER	DATE
SUPERVISOR S.FRANKEL	DATE

REGISTERED PROFESSIONAL ENGINEER MICHAEL S. CALLAHAN No. M21188 MECHANICAL STATE OF CALIFORNIA

Ames Research Center
Moffett Field, California

REPLACE ARC JET COMPLEX SVS BOILER
MECHANICAL
DIAGRAMS
MISCELLANEOUS

SIZE	CAGE CODE		REV
D	25307	A 231-1300-M705	
SCALE —		INDEX	SHEET OF

FILE NAME: 231-M705.DWG 12/12/12

DWG: R:\234\A60212\32\32.0001 (K11027) Replace Arcjet Complex SVS Boiler Final Design\500 CAD\MiSheet\231-M705_ MISC PIPING DIAGRAMS.dwg Version: 18.1s (LMS Tech) User: jlho
DATE: Feb 01, 2013 - 12:51:53 pm

DWG NO.	SH.	REV
A231-1300-M706		

SHEET NOTES

1. SEE SHEET M601, M602 AND M603 FOR EQUIPMENT AND PIPE SCHEDULES.
2. REFER TO I&C DRAWINGS FOR ADDITIONAL INSTRUMENTATION AND CONTROLS INFORMATION.
3. PIPING DIAGRAMS: THESE DIAGRAMS ARE SCHEMATIC ONLY, AND DO NOT SHOW ALL PIPING COMPONENTS REQUIRED BY THE SPECIFICATIONS AND DRAWINGS FOR A COMPLETE SYSTEM. PROVIDE A COMPLETE SYSTEM WHICH IS FUNCTIONAL IN ALL RESPECTS.
4. ALL VALVES PIPING COMPONENTS SHALL BE SUITABLE FOR ANHYDROUS AMMONIA SERVICE. BRASS COMPONENTS ARE PROHIBITED.
5. PROVIDE ADDITIONAL VALVES, COMPONENTS OR FEATURES AS REQUIRED BY NH3 SUPPLIER.
6. PIPE ALL VENTS TO APPROPRIATE SIZED FRESH WATER CONTAINER FOR COMPLETE ABSORPTION.

KEY NOTES

1. EXCESS FLOW VALVE: 1½" MNPT INLET x ¾" FNPT OUTLET, NH3 VAPOR FLOW LIMIT = 69.8 SCFM, AIR FLOW LIMIT = 53.5 SCFM, Cv = 11.2, CARBON STEEL BODY AND GUIDE, SS POPPET AND SPRING, (MGM #40:GE).
2. EXCESS FLOW VALVE: 1½" MNPT INLET x ¾" MNPT OUTLET, NH3 LIQUID FLOW LIMIT = 39 GPM, Cv = 11.2, CADMIUM PLATED STEEL BODY AND GUIDE, SS POPPET AND SPRING, (REGO #A8013D).
3. INTEGRAL CHECK VALVE (SEE KN#10)
4. PRESSURE GAUGE ASSEMBLY: ¾" MNPT INLET WITH NO. 54 DRILL ORIFACE, ¼" FNPT OUTLET FOR PRESSURE GUAGE MOUNTING, ¼" SIDE OUTLET FOR FIXED LIQUID LEVEL GAUGE VALVE , (REGO #A2805C). DIP TUBE: SEAMLESS STEEL, ⅞" MNPT CONNECTION TO VALVE, TUBE LENGTH TO MAXIMUM LIQUID LEVEL
5. FIXED LEVEL GAUGE BLEED VALVE: SS BODY, ¼"x¼" CONNECTIONS.
6. EMERGENCY AND OPERATIONAL SHUTOFF VALVE: ¾" SOLENOID VALVE, NORMALLY CLOSED, SS BODY, Cv ≥ 3.1, 12 W AC, MAXIMUM OPERATING PRESSURE DIFFERENCE ≥ 300 PSI, MINIMUM OPERATING PRESSURE DIFFERENCE = 0 PSI, MAXIMUM WORKING PRESSURE ≥ 400 PSI, REMOTE ACTUATED, LIMIT SWITCHES, TYPE 4X ELECTRIC ENCLOSURE, (DANFOSS #EVRST 15).
7. DUAL PRESSURE RELIEF VALVE ASSEMBLY: ¾" 3-WAY DUAL SHUT-OFF VALVE (HANSEN #8022), TWO PRESSURE RELIEF VALVES (MINIMUM CAPACITY = 437 SCFM AIR), UNIONS ON OUTLET OF EACH RELIEF VALVE.
8. PRESSURE RELIEF VALVE ASSEMBLY: PRESSURE RELIEF VALVE (MINIMUM CAPACITY = 54 SCFM AIR), UNION ON OUTLET OF RELIEF VALVE.
9. PRESSURE GAUGE (HANSEN #HG27) AND PRESSURE SWITCH (HANSEN #HPS): RATED FOR AMMONIA, STAINLESS STEEL, 400 PSIG RATED WORKING PRESSURE. SEE I&C DRAWINGS FOR ADDITIONAL INFORMATION.
10. FILL VALVE ASSEMBLY: DUCTILE IRON BODY, SS STEM, V-RING STEM SEAL, RUBBER SEAT, 1¼" MNPT OUTLET TANK CONNECTION x 1¼" ACME FILL HOSE WITH BREAKAWAY CONNECTION, ¼" PLUGGED BOSS ON INLET, NH3 FILL RATE = 95 GPM AT 20 PSIG MIN, INTEGRAL BACKCHECK VALVE, (REGO #A8016DBC). REMOVE INLET BOSS PLUG AND CONNECT HYDROSTATIC RELIEF VALVE (KN#11).
11. HYDROSTATIC RELIEF VALVE: ¼" MNPT INLET x ¼" NPSM OUTLET, 350 PSIG SET PRESSURE (REGO #SS8001J). PIPE ¼" DISCHARGE TO NH3 RVD MANIFOLD.
12. VAPOR WITHDRAWAL VALVE (ANGLE): DUCTILE IRON BODY, ¾" x ¾" FNPT CONNECTIONS, V-RING SEAL, ¼" PLUGGED BOSS ON OUTLET, Cv=17.7 (REGO #A7508AP). REMOVE OUTLET BOSS PLUG AND CONNECT HYDROSTATIC RELIEF VALVE (KN#11).
13. VAPOR WITHDRAWAL VALVE (STRAIGHT): DUCTILE IRON BODY, ¾" x ¾" FNPT CONNECTIONS, V-RING SEAL, PLUGGED BOSS ON OUTLET, Cv=12.0 (REGO #A7505AP).
14. LIQUID WITHDRAWAL VALVE (STRAIGHT): DUCTILE IRON BODY, ¾" x ¾" FNPT CONNECTIONS, V-RING SEAL, PLUGGED BOSS ON OUTLET, Cv=12.0 (REGO #A7505AP). REMOVE OUTLET BOSS PLUG ON VALVE CLOSEST TO TANK, AND CONNECT HYDROSTATIC RELIEF VALVE (KN#11).
15. VAPOR PRESSURE EQUALIZING VALVE.
16. ¾" SPARE TANK TAP, PLUGGED.
17. PRESSURE REDUCING VALVE: ½" FNPT CONNECTIONS, 50 PSIG SET PRESSURE, ⅜" ORIFICE, 600 PSIG RATED PRESSURE, STEEL BODY, SS INTERNALS, NEOPRENE (CR) DIAPHRAM AND SEAT, SEAL CLASS VI, (FISHER #95H).
18. AMMONIA DIFFUSION TANK: SIZE SPARGER AS REQUIRED FOR WORST CASE RELIEF VALVE DISCHARGE CAPACITY. PREPARE ALL SURFACES PER SSPC-SP-6 AND PRIME AS REQUIRED FOR APPLICABLE COATING. PROVIDE TANK COATINGS AS FOLLOWS:
    INTERIOR COATINGS:
    SHELL, BOTTOM AND TOP: TWO COATS OF FABERTITE (5 MIL MDFT).
    EXTERIOR COATINGS:
    BOTTOM: ONE COAT OF FABERTITE (5 MIL MDFT)
    SHELL AND TOP: HEAVY DUTY DURETHANE ENAMEL TOP COAT (WHITE, 3 MIL MDFT),
    PLUS ONE COAT OF FABERTITE (5 MIL MDFT) ON BOTTOM 10" OVER DURETHANE.

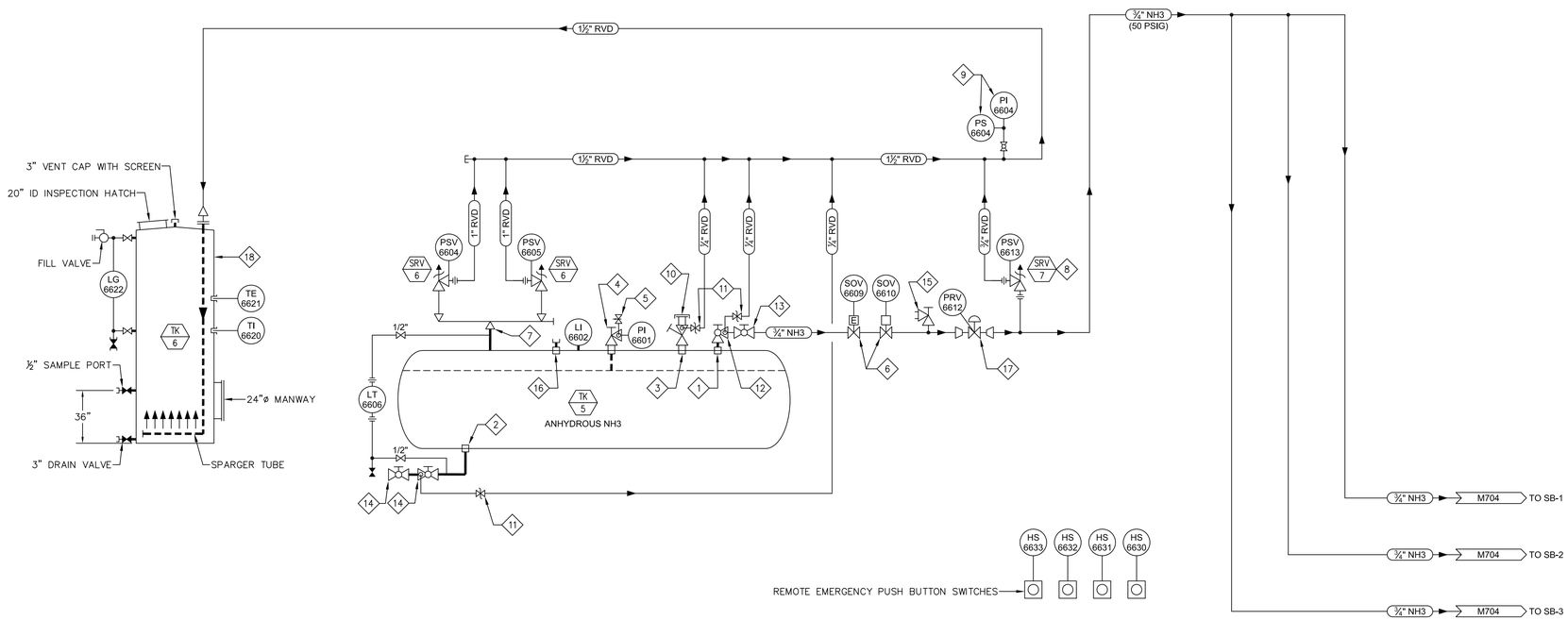

1 DIAGRAM - AMMONIA PIPING
-- M706 SCALE: NONE

ZONE	LETTER	DESCRIPTION	DRAWN	DATE	APPRVD

REVISIONS

DRAWN J.HO	DATE
DESIGNED M.CALLAHAN	DATE
CHECKED P.YALLOURIS	DATE
A&E PM G.HITE	DATE
NASA PM W.LEE	DATE
REQUESTER G.RAICHE	DATE
R&QA	DATE
SAFETY/PSM D.FRASER	DATE
SUPERVISOR S.FRANKEL	DATE

REGISTERED PROFESSIONAL ENGINEER MICHAEL S. CALLAHAN No. M21188 MECHANICAL STATE OF CALIFORNIA

Ames Research Center
Moffett Field, California

REPLACE ARC JET COMPLEX SVS BOILER
MECHANICAL
DIAGRAM
AMMONIA PIPING

SIZE	CAGE CODE	
D	25307	A 231-1300-M706 REV
SCALE —		INDEX SHEET OF

FILE NAME: 231-M706.DWG 12/12/12

DWG: R:\23AN\60219302.0001 (1K11027) Replace Arc Jet Complex SVS Boiler Final Design\500 CAD\MSheet\231-M706_NH3 PIPING DIAGRAM.dwg Version: 18.1s (LMS Tech) User: jjho
DATE: Feb 01, 2013 - 12:52:02 pm

HVAC SEQUENCE OF OPERATION

1. HVAC UNIT OPERATION: ENABLE UNIT TO OPERATE DURING PROGRAMMABLE SCHEDULED OCCUPANCY, FOR MORNING WARM-UP, FOR PRE-OCCUPANCY PURGE, AND FOR NIGHT SETBACK RESTART. OCCUPANCY SCHEDULE CAN BE MANUALLY OVERRIDDEN BY BYPASS TIMER SWITCH.
2. BYPASS TIMER: USE BYPASS TIMER TO OVERRIDE OCCUPANCY SCHEDULE TO OPERATE SYSTEM IN NORMAL OCCUPIED MODE (MAXIMUM 4 HOURS) DURING UNSCHEDULED HOURS. RESUME NORMAL OPERATION WHEN SCHEDULED, REGARDLESS OF TIMER STATUS.
3. MORNING WARM-UP: OPTIMIZE WARM-UP SEQUENCE START TIME (MINIMUM ONE HOUR PRIOR TO SCHEDULED OCCUPANCY) BASED ON OUTSIDE AIR TEMPERATURE AND AVERAGE SPACE AIR TEMPERATURE RELATIVE TO 70°F. STOP WARM-UP SEQUENCE DURING SCHEDULED OCCUPANCY. WARM-UP SEQUENCE SHALL BE AS DESCRIBED FOR EACH COMPONENT.
4. PRE-OCCUPANCY PURGE: OPERATE HVAC UNIT ONE HOUR PRIOR TO SCHEDULED OCCUPANCY WITH MIXED AIR DAMPERS IN MINIMUM OA POSITION.
5. NIGHT SETBACK RESTART: WHEN AVERAGE SPACE TEMPERATURE FALLS BELOW HEATING SETBACK SET POINT (SPACE HEATING SET POINT MINUS 15°F), AUTOMATICALLY RESTART UNIT WITH WARM-UP SEQUENCE.
6. SUPPLY AIR FAN: OPERATE FAN WHEN UNIT IS ENABLED AS DESCRIBED ABOVE.
7. MIXED AIR DAMPERS: OPEN OSA DAMPER TO MINIMUM POSITION WHEN UNIT IS ENABLED AND NOT IN WARM-UP MODE. OTHERWISE, CLOSE OSA DAMPER. CONTROL RETURN AIR DAMPER IN PARALLEL WITH OSA DAMPER TO CLOSE AS OSA DAMPER OPENS. ECONOMIZER CONTROL: NONE. DEMAND CONTROLLED VENTILATION: NONE. BUILDING PRESSURIZATION CONTROL: NONE
8. DX COOLING COIL: MODULATE COIL CAPACITY BY FACTORY CONTROLS TO MAINTAIN ZONE TEMPERATURE COOLING SET POINT. PROVIDE HOT GAS BYPASS CONTROL, IF COMPRESSORS CANNOT BE DIGITALLY MODULATED.
9. HOT WATER HEATING COIL: MODULATE HEATING HOT WATER FLOW CONTROL VALVE TO MAINTAIN ZONE TEMPERATURE HEATING SET POINT.
10. FILTER BANK: MONITOR DIFFERENTIAL PRESSURE ACROSS BANKS VISUALLY USING GAGES.
11. TOILET EXHAUST FAN (TEF-1): OPERATE CONTINUOUSLY DURING SCHEDULED OCCUPANCY BY MANUAL SWITCH.

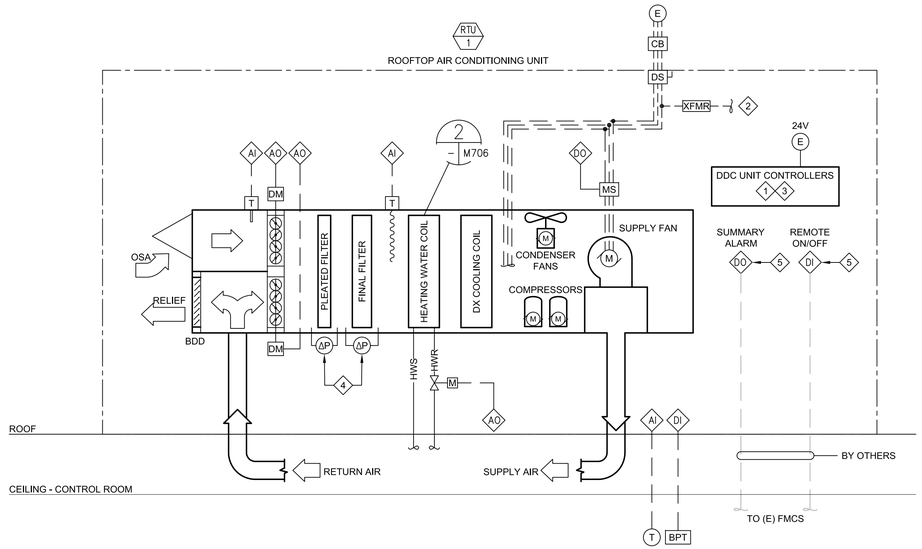

DIAGRAM NOTES:
1. CONNECT ALL DDC CONTROL POINTS TO DDC CONTROLLERS: FACTORY MOUNT DDC CONTROLLER INSIDE UNIT CONTROL PANEL.
2. CONNECT 24 VOLT POWER FROM STEP-DOWN TRANSFORMER TO UNIT CONTROL PANEL AND CONTROLLERS.
3. DDC UNIT CONTROLLER FACTORY INSTALLED BY UNIT MANUFACTURER: INCLUDE ALL NECESSARY INTERNAL UNIT CONTROL FUNCTIONS REQUIRED BY UNIT MANUFACTURE, IN ADDITION TO FUNCTIONS REQUIRED BY SEQUENCE OF OPERATION.
4. INSTALL DIFFERENTIAL PRESSURE INDICATOR (MAGNEHELIC GAGE, OR EQUAL) ACROSS EACH FILTER BANK, TYPICAL.
5. DRY CONTACTS FOR FUTURE CONNECTION TO FMCS.

1 RTU-1 SYSTEM FLOW AND CONTROL DIAGRAM
M707 | M707 SCALE: NONE

SHEET NOTES

1. SEE SHEET M601, M602 AND M603 FOR EQUIPMENT AND PIPE SCHEDULES.
2. REFER TO I&C DRAWINGS FOR ADDITIONAL INSTRUMENTATION AND CONTROLS INFORMATION.
3. CONTROL DIAGRAMS: THESE DIAGRAMS ARE SCHEMATIC ONLY SHOWING BASIC CONFIGURATION, AND ARE NOT INTENEDED TO SHOW ALL COMPONENTS REQUIRED FOR A COMPLETE FUNCTIONING SYSTEM.

HVAC CONTROL NOTES

1. DESIGN AND INSTALL CONTROL SYSTEM TO PERFORM AND FUNCTION AS REQUIRED BY SEQUENCE OF OPERATION. DESIGN AND INSTALLATION SHALL CONFORM TO SPECIFICATIONS. PROVIDE ALL EQUIPMENT, COMPONENTS, WIRING, CONDUIT, CONNECTIONS AND PROGRAMMING NECESSARY FOR A FULLY FUNCTIONAL SYSTEM. MECHANICAL SYSTEM INSTALLER SHALL BE RESPONSIBLE FOR A FULLY FUNCTIONAL CONTROL SYSTEM.
2. INSTALL CONDUIT AS SPECIFIED IN ELECTRICAL DIVISION. MINIMUM CONDUIT SIZE IS 3/4". INSTALL LOW VOLTAGE POWER, SIGNAL AND DATA WIRING AND CABLES AS SPECIFIED FOR CONTROLS. SEE ELECTRICAL DRAWINGS FOR OTHER CONTROL RELATED WORK.
3. ALL CONTROL DEVICES, WIRING AND CONDUIT SHALL BE NEW. SPLICING OF WIRES IS NOT ACCEPTABLE.
4. PROVIDE DEDICATED POWER TO ALL CONTROL PANELS AND DEVICES. EXTEND 24 VAC POWER TO ALL LOW VOLTAGE CONTROL DEVICES FROM LOCAL PANEL OR CONTROLLER.
5. GROUND LOW VOLTAGE TSP CABLE FOR DIGITAL CONTROLS AT FIELD DEVICE.
6. REFER TO EQUIPMENT SCHEDULES FOR DESIGN OPERATING CONDITIONS. DESIGN SET POINTS WILL APPROXIMATE THESE CONDITIONS. OPERATING SET POINTS WILL BE ADJUSTED AND TUNED TO PROVIDE STABLE OPERATION.

HVAC CONTROL LEGEND

— A —	CONTROL AIR SUPPLY	MS	MOTOR STARTER
— — — —	ELECTRICAL WIRING	VFD	VARIABLE FREQUENCY DRIVE
M	CONTROL AIR MAIN	DS	ELECTRICAL DISCONNECT SWITCH
E	ELECTRICAL POWER CONNECTION	HOA	MANUAL HAND-OFF-AUTOMATIC SWITCH
D	DATA CABLE LINK	BPT	MANUAL BYPASS TIMER
M	ELECTRICAL MOTOR	DM	AUTOMATIC DAMPER MOTOR (ACTUATOR)
DI	FMCS DIGITAL INPUT	DPI	DIFFERENTIAL PRESSURE INDICATOR
DO	FMCS DIGITAL OUTPUT	DPS	DIFFERENTIAL PRESSURE SWITCH
AI	FMCS ANALOG INPUT	SP	DUCT STATIC PRESSURE SENSOR
AO	FMCS ALALOG OUPUT	FS	FLOW SENSOR
T	DRY BULB TEMPERATURE SENSOR (WALL MOUNT)	CB	CURRENT BREAKER
CO2	CARBON DIOXIDE SENSOR (2% ACCURACY)	CS	CURRENT SENSOR
T	DUCT TEMPERATURE SENSOR	R	CONTROL RELAY
T	WATER TEMPERATURE SENSOR IN WELL	S	MANUAL SWITCH
SD	DUCT SMOKE DETECTOR	V	VELOCITY SENSOR
		XFMR	STEP-DOWN CONTROLS TRANSFORMER
M	3-WAY CONTROL VALVE	FACP	FIRE ALARM CONTROL PANEL
M	2-WAY CONTROL VALVE	MBC	FMCS MODULAR BUILDING CONTROLLER
S	SOLENOID VALVE	DDC	FACTORY UNIT CONTROLLER
	CALIBRATED BALANCING VALVE (CIRCUIT SETTER)	ΔP	PRESSURE DROP
		FLN	FIELD LOCAL NETWORK
	AUTOMATIC FLOW LIMITING VALVE (PRESSURE INDEPENDENT) WITH READOUT PORTS (CIRCUIT SENTRY)	BLN	BUILDING LOCAL NETWORK
FLV		BIM	BUS INTERFACE MODULE

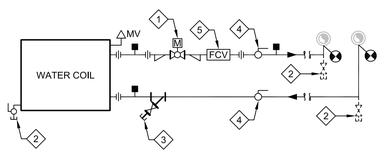

HEATING COIL

DIAGRAM NOTES:
1. CONTROL VALVE. REFER TO RTU SCHEDULE FOR SIZE.
2. CAPPED DRAIN VALVE WITH HOSE ADAPTOR REQUIRED AT ALL LOW POINTS FOR DRAINAGE
3. LINE SIZE STRAINER WITH CAPPED HOSE ADAPTOR ON BLOWDOWN VALVE.
4. LINE SIZE SHUT-OFF SERVICE VALVE
5. FLOW CONTROL VALVE FOR FLOW LIMITING. REFER TO RTU SCHEDULE FOR DESIGN GPM. DISCRETE PIPING COMPONENTS MAY BE COMBINED WITH FLV IN AVAILABLE KITS.

2 HYDRONIC COIL PIPING
M707 | M707 SCALE: NONE

DDC INPUT/OUTPUT TABLE

SYSTEM, APPARATUS, OR AREA POINT DESCRIPTION	INPUTS									SYSTEM FEATURES														
	MONITOR AND DISPLAY									COMMANDABLE						ALARM					PROGRAM					
	ANALOG			DIGITAL																						
	OUTSIDE AIR TEMPERATURE	SPACE AIR TEMPERATURE	MIXED AIR TEMPERATURE	SPACE STATIC PRESSURE	SUPPLY FAN RUN STATUS	FILTER PRESSURE DELTA-P	BYPASS TIMER SWITCH	UNIT SMOKE DETECTOR	REMOTE ON/OFF	SUPPLY FAN START/STOP	EXHAUST FAN START/STOP	HEATING WATER VALVE POSITION	ECONOMIZER DAMPER POSITION	DX COOLING CAPACITY	SUMMARY ALARM RELAY		HIGH FILTER DELTA-P	LOW SUPPLY AIR TEMPERATURE	FAN FAILURE	RTU SUMMARY FAULT	HIGH SPACE TEMPERATURE	ROOM TEMPERATURE SET POINT	ECONOMIZER CONTROL	NIGHT SET BACK RESTART	WARM-UP START TIME	ALARM INSTRUCTION	OCCUPANCY SCHEDULE	TRENDING
RTU-1	●	●	●		●		●		●	●		●	●	●	●					●		●		●	●	●	●
TEF-1																											

ZONE	LETTER	DESCRIPTION	DRAWN	DATE	APPRVD

REVISIONS

DRAWN J.HO	DATE	
DESIGNED M.CALLAHAN	DATE	
CHECKED P.YALLOURIS	DATE	
A&E PM G.HITE	DATE	
NASA PM W.LEE	DATE	
REQUESTER G.RAICHE	DATE	
R&QA	DATE	
SAFETY/PSM	DATE	
SUPERVISOR S.FRANKEL	DATE	

REGISTERED PROFESSIONAL ENGINEER MICHAEL S. CALLAHAN No. M21188 MECHANICAL STATE OF CALIFORNIA

Ames Research Center
Moffett Field, California

REPLACE ARC JET COMPLEX SVS BOILER
MECHANICAL

HVAC CONTROL DIAGRAMS

SIZE D | CAGE CODE 25307 | A 231-1300-M707 | REV
SCALE — | INDEX | SHEET OF

FILE NAME: 231-M707.DWG 12/12/12

DWG:R:\234A\60212932.0001_(K11027) Replace Arc Jet Complex SVS Boiler Final Design\500 CAD\MSheet\231-M707_HVAC DIAGRAMS.dwg Version: 18.1s (LMS Tech) User: jjho
DATE: Feb 04, 2013 - 11:46:20 am

DWG NO.	SH.	REV
A231-1300-M801	1	

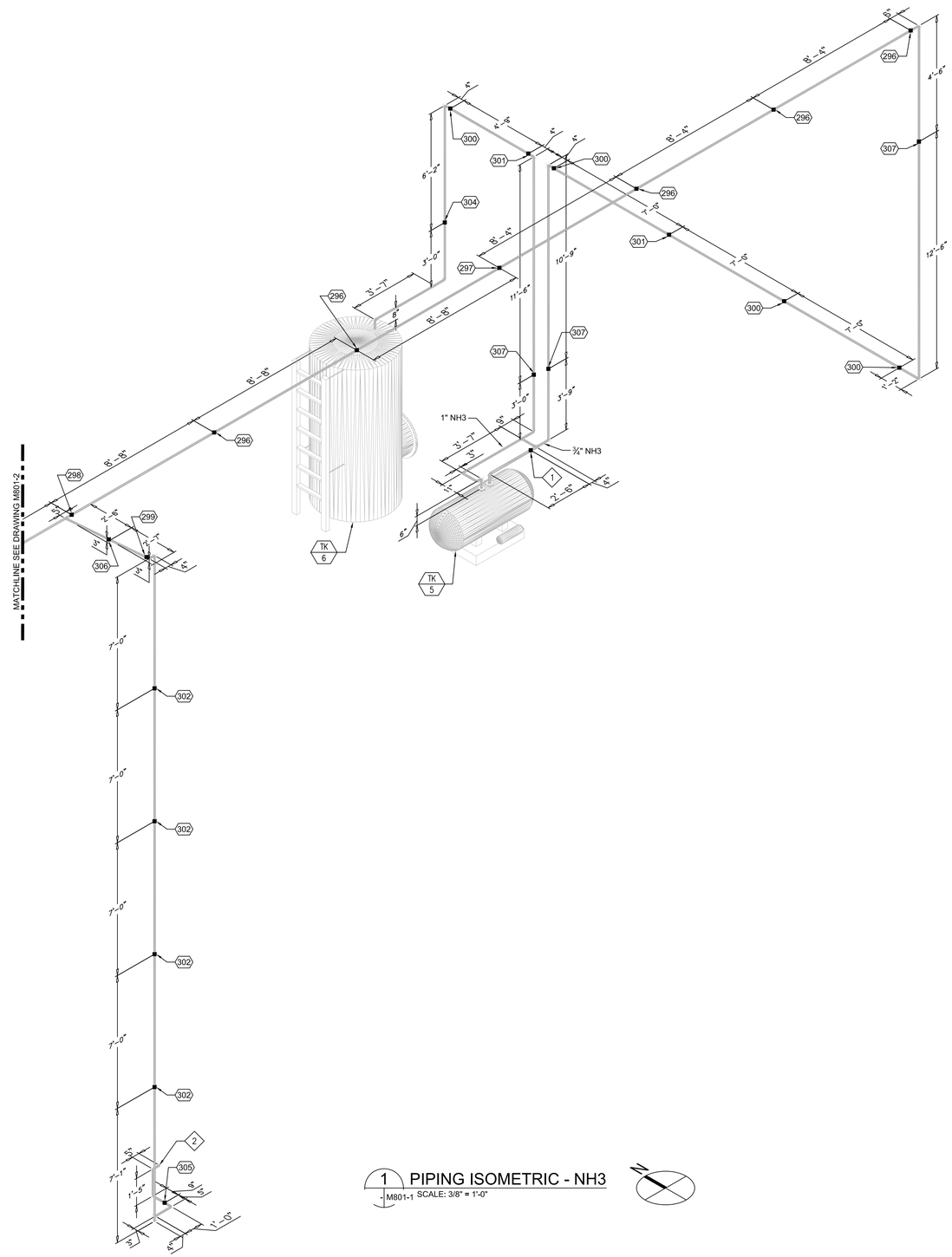

1 PIPING ISOMETRIC - NH3
M801-1 SCALE: 3/8" = 1'-0"

SHEET NOTES

1. SEE SHEET M601, M602 AND M603 FOR EQUIPMENT AND PIPE SCHEDULES.
2. SEE PIPE SUPPORT SCHEDULE ON DRAWING M603 FOR PIPE SUPPORT DETAIL.

KEY NOTES

1. CONNECT TO STRUT FRAMING OF NH3 STORAGE TANK. SEE DRAWING M103 FOR DETAIL.
2. CONNECT TO NH3 DILUTION STATION.

ZONE	LETTER	DESCRIPTION	DRAWN	DATE	APPRVD

REVISIONS

DRAWN J.HO	DATE	
DESIGNED M.CALLAHAN	DATE	
CHECKED P.YALLOURIS	DATE	
A&E PM G.HITE	DATE	
NASA PM W.LEE	DATE	
REQUESTER G.RAICHE	DATE	
R&QA	DATE	
SAFETY/PSM D.FRASER	DATE	
SUPERVISOR S.FRANKEL	DATE	

REGISTERED PROFESSIONAL ENGINEER MICHAEL S. CALLAHAN No. M21188 MECHANICAL STATE OF CALIFORNIA

Ames Research Center
Moffett Field, California

REPLACE ARC JET COMPLEX SVS BOILER
MECHANICAL

PIPING ISOMETRIC - NH3
(SHEET 1 OF 2)

SIZE	CAGE CODE		REV
D	25307	A 231-1300-M801	
SCALE NONE		INDEX	SHEET 1 OF 2

FILE NAME: 231-M801-1.DWG 12/12/12

DWG: R:\234A\80231202.0001 (K11027) Replace ArcJect Complex SVS Boiler Final Design\500 CAD\MSheet\231-M801-1_PIPING ISO-NH3.dwg Version: 18.1s (LMS Tech) User: jjho
DATE: Feb 01, 2013 - 12:52:24 pm

DWG NO.	SH.	REV
A231-1300-M801	1	

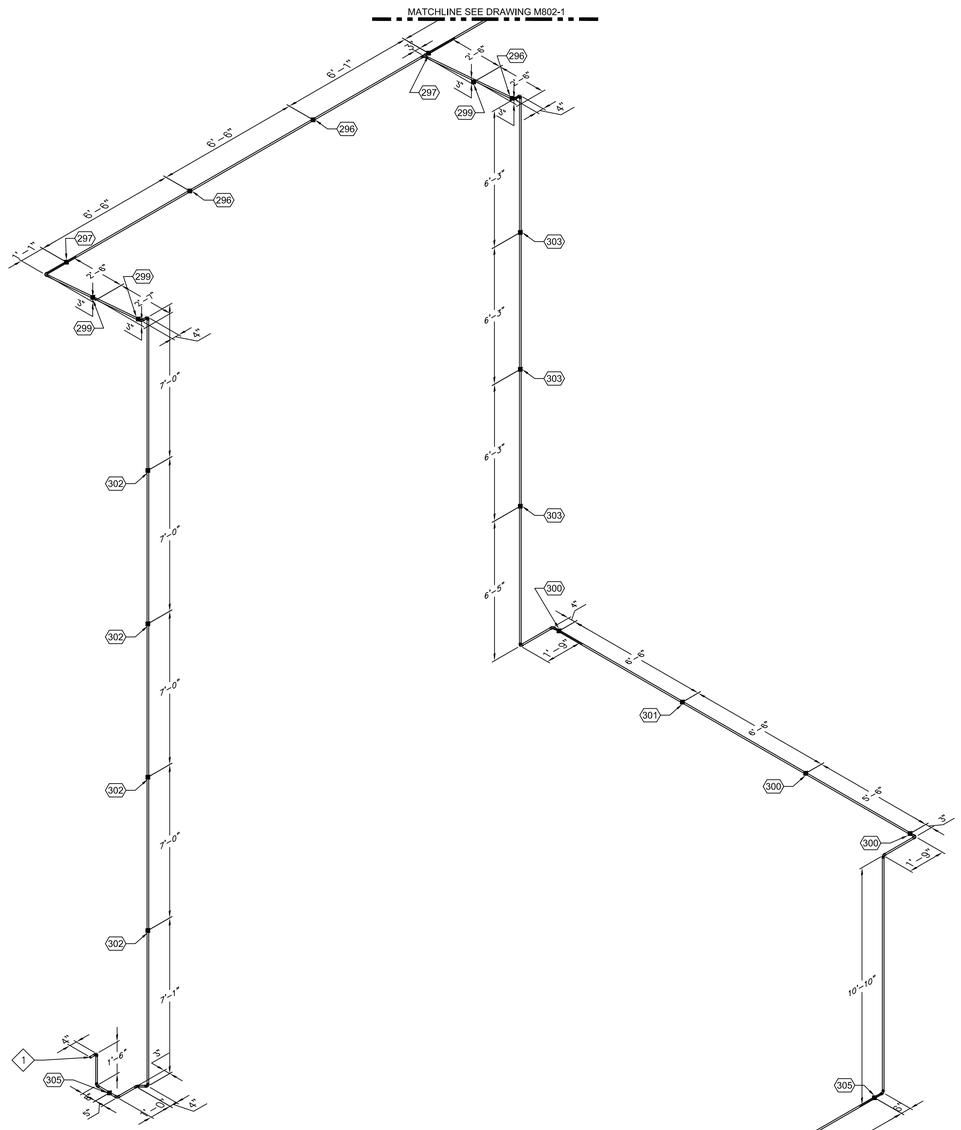

2 PIPING ISOMETRIC - NH3
M801-2 M801-2 SCALE: 3/8" = 1'-0"

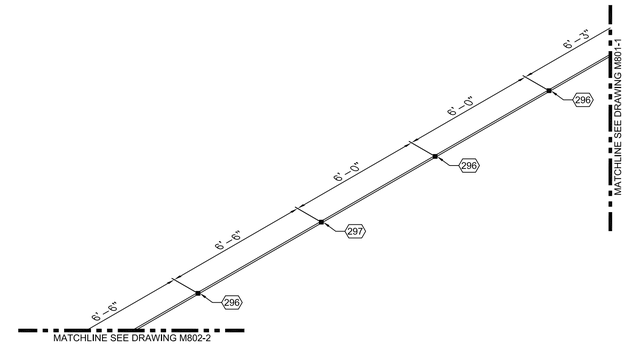

1 PIPING ISOMETRIC - NH3
M801-1 M801-2 SCALE: 3/8" = 1'-0"

SHEET NOTES

1. SEE SHEET M601, M602 AND M603 FOR EQUIPMENT AND PIPE SCHEDULES.
2. SEE PIPE SUPPORT SCHEDULE ON DRAWING M603 FOR PIPE SUPPORT DETAIL.

KEY NOTES

1. CONNECT TO NH3 DILUTION STATION.

ZONE	LETTER	DESCRIPTION	DRAWN	DATE	APPRVD

REVISIONS

DRAWN J.HO	DATE
DESIGNED M.CALLAHAN	DATE
CHECKED P.YALLOURIS	DATE
A&E PM G.HITE	DATE
NASA PM W.LEE	DATE
REQUESTER G.RAICHE	DATE
R&QA	DATE
SAFETY/PSM D.FRASER	DATE
SUPERVISOR S.FRANKEL	DATE

REGISTERED PROFESSIONAL ENGINEER MICHAEL S. CALLAHAN No. M21188 MECHANICAL STATE OF CALIFORNIA

Ames Research Center
Moffett Field, California

REPLACE ARC JET COMPLEX SVS BOILER
MECHANICAL

PIPING ISOMETRIC - NH3 (SHEET 2 OF 2)

SIZE	CAGE CODE		REV
D	25307	A 231-1300-M801	
SCALE NONE		INDEX	SHEET 2 OF 2

FILE NAME: 231-M801-2.DWG 12/12/12

DWG: R:\234A\80231202.0001 (K11027) Replace ArcJect Complex SVS Boiler Final Design\500 CAD\MSheet\231-M801-2_PIPING ISO-NH3.dwg Version: 18.1s (LMS Tech) User: jjho
DATE: Feb 01, 2013 - 12:52:33 pm

DWG NO.	SH.	REV
A231-1300-M802	1	

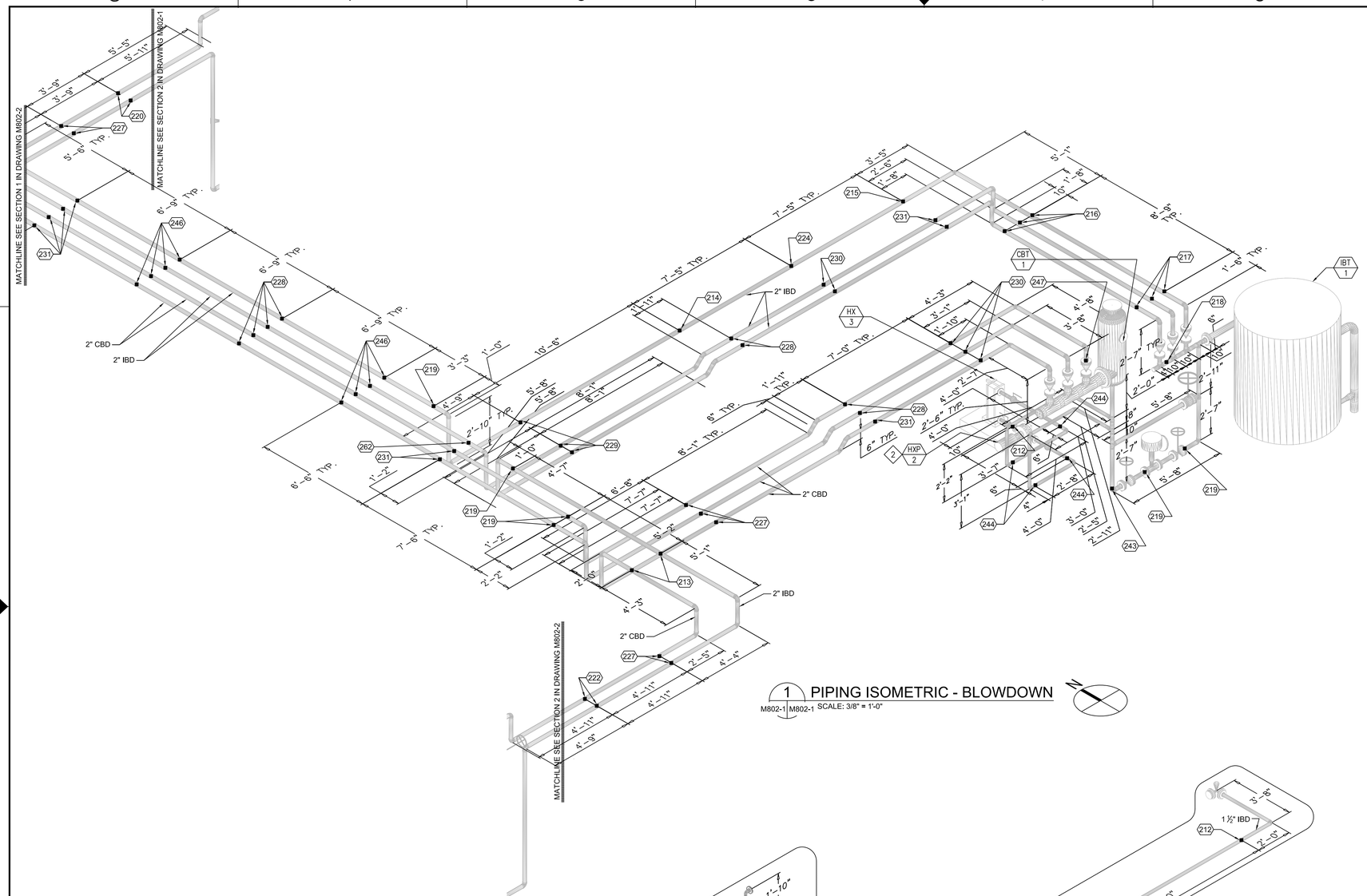

1 PIPING ISOMETRIC - BLOWDOWN
M802-1 | M802-1 SCALE: 3/8" = 1'-0"

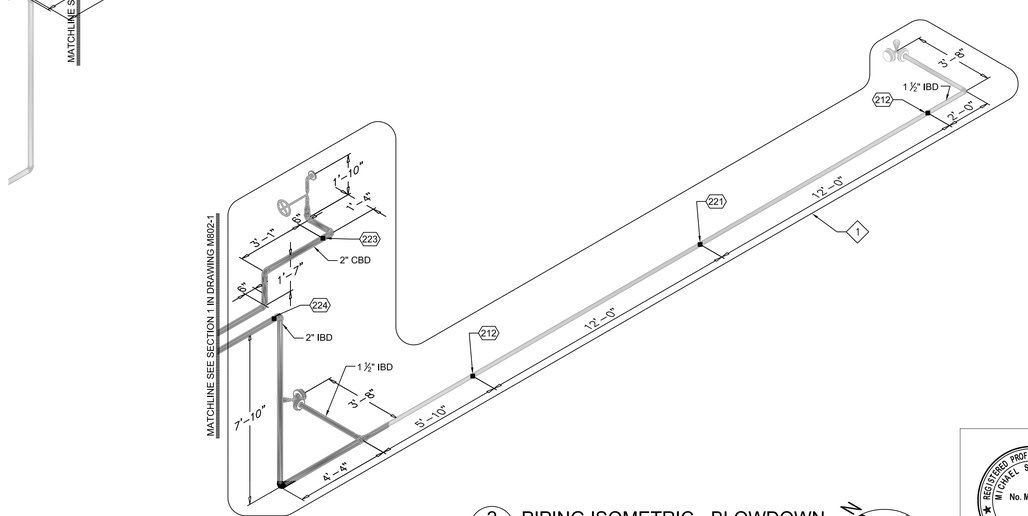

2 PIPING ISOMETRIC - BLOWDOWN
M802-1 | M802-1 SCALE: 3/8" = 1'-0"

SHEET NOTES

1. SEE SHEET M601, M602 AND M603 FOR EQUIPMENT AND PIPE SCHEDULES.
2. PIPE INSULATION ARE NOT SHOWN. SEE SCHEDULE ON SHEET M603 FOR PIPE INSULATION PER SYSTEM.
3. SEE PIPE SUPPORT SCHEDULE ON DRAWING M603 FOR PIPE SUPPORT DETAIL.

KEY NOTES

1. DESIGN-BUILD PIPING: KEY NOTED PIPING SECTIONS HAVE BEEN PRE-ENGINEERED AND THE DESIGN MAY BE USED WITHOUT FURTHER ANALYSIS, IF DRAWING REQUIREMENTS AND CONFIGURATION ARE IMPLEMENTED WITHOUT MODIFICATION.
2. PROVIDE VERTICAL SUPPORT FOR INLINE PUMP MOTOR.

ZONE	LETTER	DESCRIPTION	DRAWN	DATE	APPRVD

REVISIONS

DRAWN J.HO	DATE
DESIGNED M.CALLAHAN	DATE
CHECKED P.YALLOURIS	DATE
A&E PM G.HITE	DATE
NASA PM W.LEE	DATE
REQUESTER G.RAICHE	DATE
R&QA	DATE
SAFETY/PSM D.FRASER	DATE
SUPERVISOR S.FRANKEL	DATE

REGISTERED PROFESSIONAL ENGINEER MICHAEL S. CALLAHAN No. M21188 MECHANICAL STATE OF CALIFORNIA

Ames Research Center
Moffett Field, California

REPLACE ARC JET COMPLEX SVS BOILER
MECHANICAL

PIPING ISOMETRIC - BD (SHEET 1 OF 2)

SIZE	CAGE CODE		REV
D	25307	A 231-1300-M802	
SCALE NONE		INDEX	SHEET 1 OF 2

FILE NAME: 231-M802-1.DWG 12/12/12

DWG: R:\234A\60212932.0001 (K11027) Replace Arc Jet Complex SVS Boiler Final Design\500 CAD\M\Sheet\231-M802-1_PIPING ISO-BD.dwg Version: 18.1s (LMS Tech) User: jjho
DATE: Feb 01, 2013 - 12:52:42 pm

DWG NO.	SH.	REV
A231-1300-M802	2	

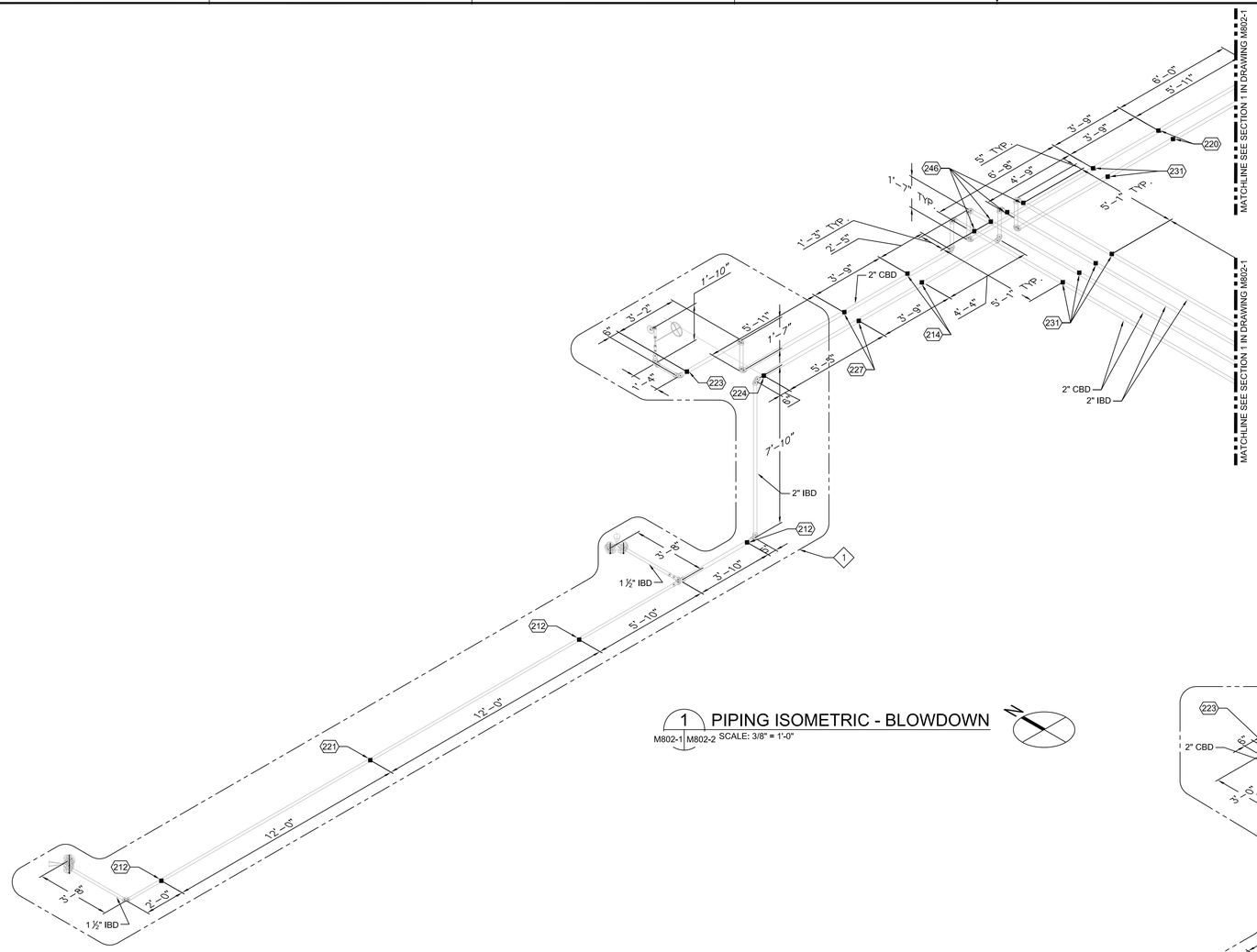

1 PIPING ISOMETRIC - BLOWDOWN
M802-1 M802-2 SCALE: 3/8" = 1'-0"

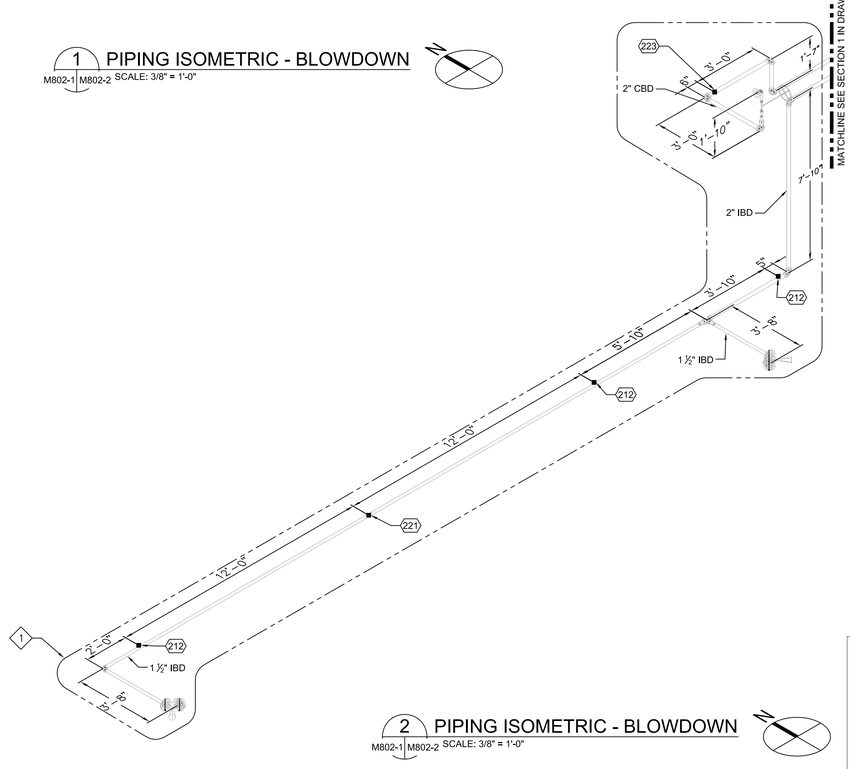

2 PIPING ISOMETRIC - BLOWDOWN
M802-1 M802-2 SCALE: 3/8" = 1'-0"

SHEET NOTES

1. SEE SHEET M601, M602 AND M603 FOR EQUIPMENT AND PIPE SCHEDULES.
2. PIPE INSULATION ARE NOT SHOWN. SEE SCHEDULE ON SHEET M603 FOR PIPE INSULATION PER SYSTEM.
3. SEE PIPE SUPPORT SCHEDULE ON DRAWING M603 FOR PIPE SUPPORT DETAIL.

KEY NOTES

1. DESIGN-BUILD PIPING: KEY NOTED PIPING SECTIONS HAVE BEEN PRE-ENGINEERED AND THE DESIGN MAY BE USED WITHOUT FURTHER ANALYSIS, IF DRAWING REQUIREMENTS AND CONFIGURATION ARE IMPLEMENTED WITHOUT MODIFICATION.

ZONE	LETTER	DESCRIPTION	DRAWN	DATE	APPRVD

REVISIONS

DRAWN J.HO	DATE	
DESIGNED M.CALLAHAN	DATE	
CHECKED P.YALLOURIS	DATE	
A&E PM G.HITE	DATE	
NASA PM W.LEE	DATE	
REQUESTER G.RAICHE	DATE	
R&QA	DATE	
SAFETY/PSM D.FRASER	DATE	
SUPERVISOR S.FRANKEL	DATE	

REGISTERED PROFESSIONAL ENGINEER MICHAEL S. CALLAHAN No. M21188 MECHANICAL STATE OF CALIFORNIA

Ames Research Center
Moffett Field, California

REPLACE ARC JET COMPLEX SVS BOILER
MECHANICAL

PIPING ISOMETRIC - BD (SHEET 2 OF 2)

SIZE	CAGE CODE		REV
D	25307	A 231-1300-M802	
SCALE NONE		INDEX	SHEET 2 OF 2

FILE NAME: 231-M802-2.DWG 12/12/12

DWG:R:\234A\60212932.0001 (K11027) Replace Arc-Ject Complex SVS Boiler Final Design\500 CAD\MSheet\231-M802-2_PIPING ISO-BD.dwg Version: 18.1s (LMS Tech) User: jjho
DATE: Feb 01, 2013 - 12:82:55 pm

DWG NO.	SH.	REV
A231-1300-M803	1	

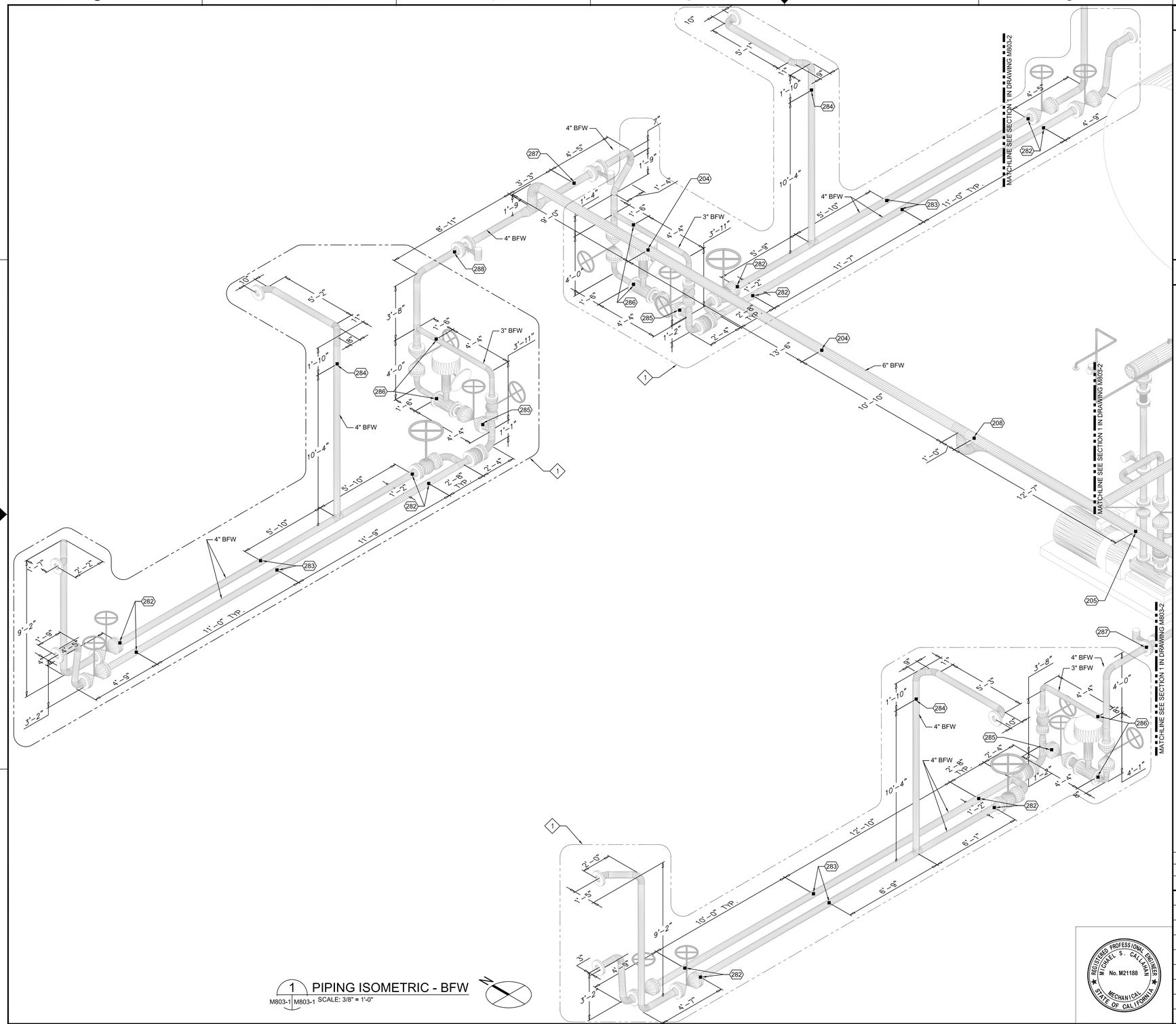

1 PIPING ISOMETRIC - BFW
M803-1 | M803-1 SCALE: 3/8" = 1'-0"

SHEET NOTES

1. SEE SHEET M601, M602 AND M603 FOR EQUIPMENT AND PIPE SCHEDULES.
2. PIPE INSULATION ARE NOT SHOWN. SEE SCHEDULE ON SHEET M603 FOR PIPE INSULATION PER SYSTEM.
3. SEE PIPE SUPPORT SCHEDULE ON DRAWING M603 FOR PIPE SUPPORT DETAIL.

KEY NOTES

1. DESIGN-BUILD PIPING: KEY NOTED PIPING SECTIONS HAVE BEEN PRE-ENGINEERED AND THE DESIGN MAY BE USED WITHOUT FURTHER ANALYSIS, IF DRAWING REQUIREMENTS AND CONFIGURATION ARE IMPLEMENTED WITHOUT MODIFICATION.

ZONE	LETTER	DESCRIPTION	DRAWN	DATE	APPRVD

REVISIONS

DRAWN J.HO	DATE
DESIGNED M.CALLAHAN	DATE
CHECKED P.YALLOURIS	DATE
A&E PM G.HITE	DATE
NASA PM W.LEE	DATE
REQUESTER G.RAICHE	DATE
R&QA	DATE
SAFETY/PSM D.FRASER	DATE
SUPERVISOR S.FRANKEL	DATE

REGISTERED PROFESSIONAL ENGINEER MICHAEL S. CALLAHAN No. M21188 MECHANICAL STATE OF CALIFORNIA

Ames Research Center
Moffett Field, California

REPLACE ARC JET COMPLEX SVS BOILER
MECHANICAL

PIPING ISOMETRIC - BFW (SHEET 1 OF 2)

SIZE	CAGE CODE	REV
D	25307	A 231-1300-M803
SCALE NONE	INDEX	SHEET 1 OF 2

FILE NAME: 231-M803-1.DWG 12/12/12

DWG: R:\234A\80231\2632.0001 (K11027) Replace ArcJect Complex SVS Boiler Final Design\500 CAD\M\Sheet\231-M803-1_PIPING ISO-BFW.dwg Version: 18.1s (LMS Tech) User: jjho
DATE: Feb 01, 2013 - 12:53:04 pm

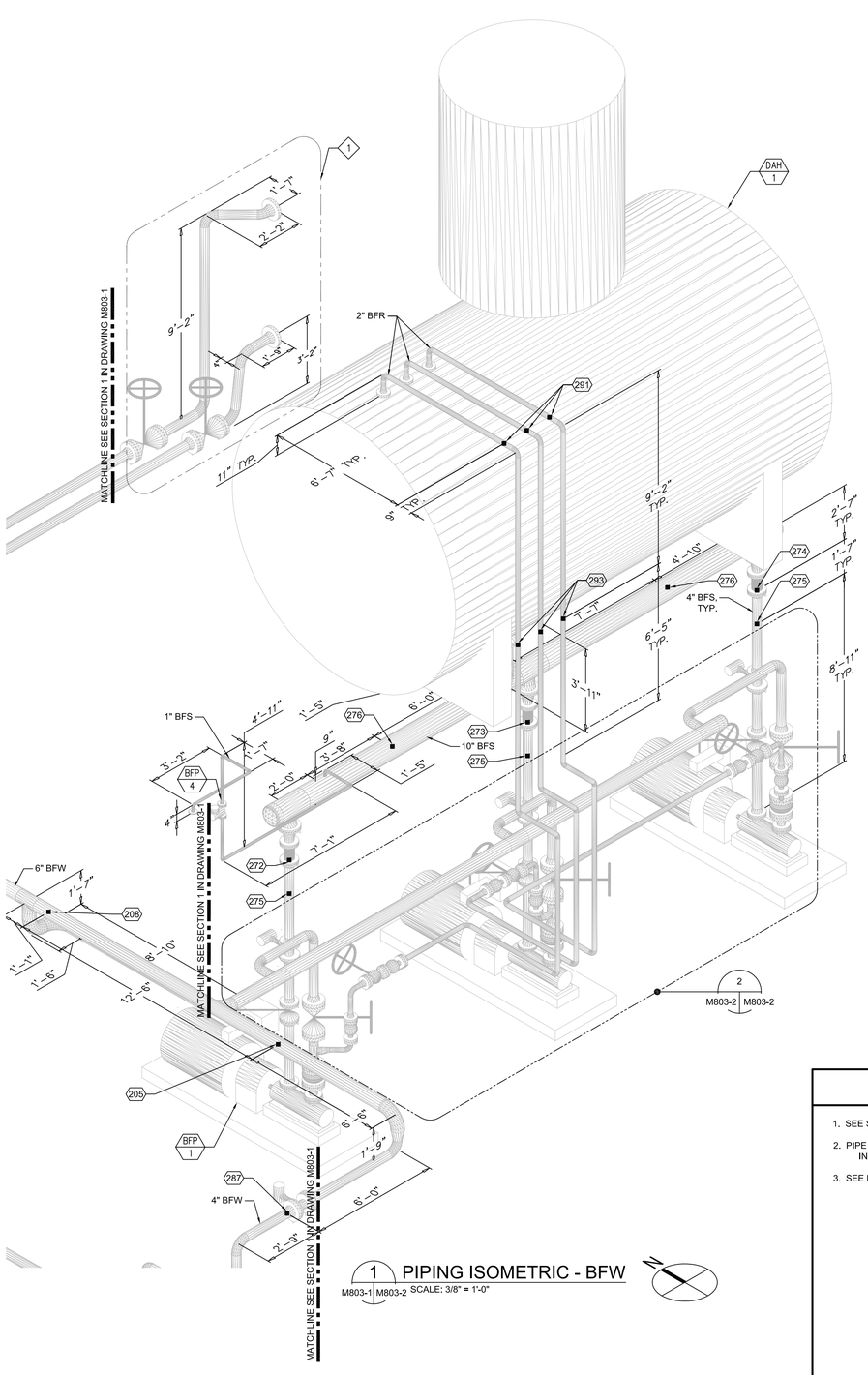

1 PIPING ISOMETRIC - BFW
M803-1 M803-2 SCALE: 3/8" = 1'-0"

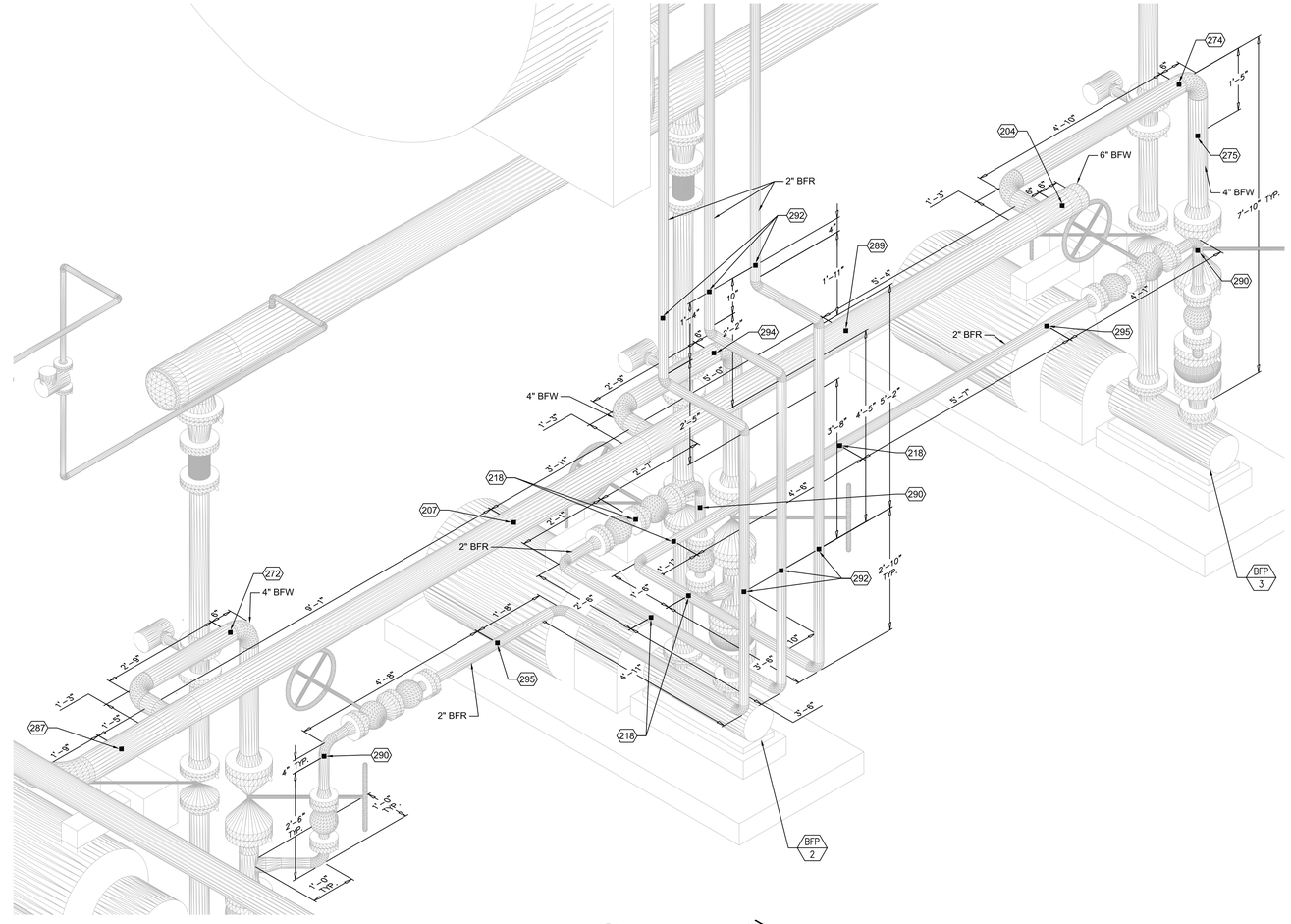

2 SECTION
M803-2 M803-2 SCALE: 3/4" = 1'-0"

SHEET NOTES

1. SEE SHEET M601, M602 AND M603 FOR EQUIPMENT AND PIPE SCHEDULES.
2. PIPE INSULATION ARE NOT SHOWN. SEE SCHEDULE ON SHEET M603 FOR PIPE INSULATION PER SYSTEM.
3. SEE PIPE SUPPORT SCHEDULE ON DRAWING M603 FOR PIPE SUPPORT DETAIL.

KEY NOTES

1. DESIGN-BUILD PIPING: KEY NOTED PIPING SECTIONS HAVE BEEN PRE-ENGINEERED AND THE DESIGN MAY BE USED WITHOUT FURTHER ANALYSIS, IF DRAWING REQUIREMENTS AND CONFIGURATION ARE IMPLEMENTED WITHOUT MODIFICATION.

REGISTERED PROFESSIONAL ENGINEER MICHAEL S. CALLAHAN No. M21188 MECHANICAL STATE OF CALIFORNIA

ZONE	LETTER	DESCRIPTION	DRAWN	DATE	APPRVD

REVISIONS

DRAWN J.HO	DATE	
DESIGNED M.CALLAHAN	DATE	
CHECKED P.YALLOURIS	DATE	
A&E PM G.HITE	DATE	
NASA PM W.LEE	DATE	
REQUESTER G.RAICHE	DATE	
R&QA	DATE	
SAFETY/PSM D.FRASER	DATE	
SUPERVISOR S.FRANKEL	DATE	

Ames Research Center
Moffett Field, California

REPLACE ARC JET COMPLEX SVS BOILER
MECHANICAL

PIPING ISOMETRIC - BFW (SHEET 2 OF 2)

SIZE	CAGE CODE		REV
D	25307	A 231-1300-M803	
SCALE NONE		INDEX	SHEET 2 OF 2

FILE NAME: 231-M803-2.DWG 12/12/12

DWG:R:\234A\60212932.0001 (K11027) Replace Arc-Jet Complex SVS Boiler Final Design\500 CAD\MSheet\231-M803-2_PIPING ISO-BFW.dwg Version: 18.1s (LMS Tech) User: jlho
DATE: Feb 01, 2013 - 12:53:18 pm

DWG NO.	SH.	REV
A231-1300-M804		

SHEET NOTES

1. SEE SHEET M601, M602 AND M603 FOR EQUIPMENT AND PIPE SCHEDULES.
2. PIPE INSULATION ARE NOT SHOWN. SEE SCHEDULE ON SHEET M603 FOR PIPE INSULATION PER SYSTEM.
3. SEE PIPE SUPPORT SCHEDULE ON DRAWING M603 FOR PIPE SUPPORT DETAIL.

KEY NOTES

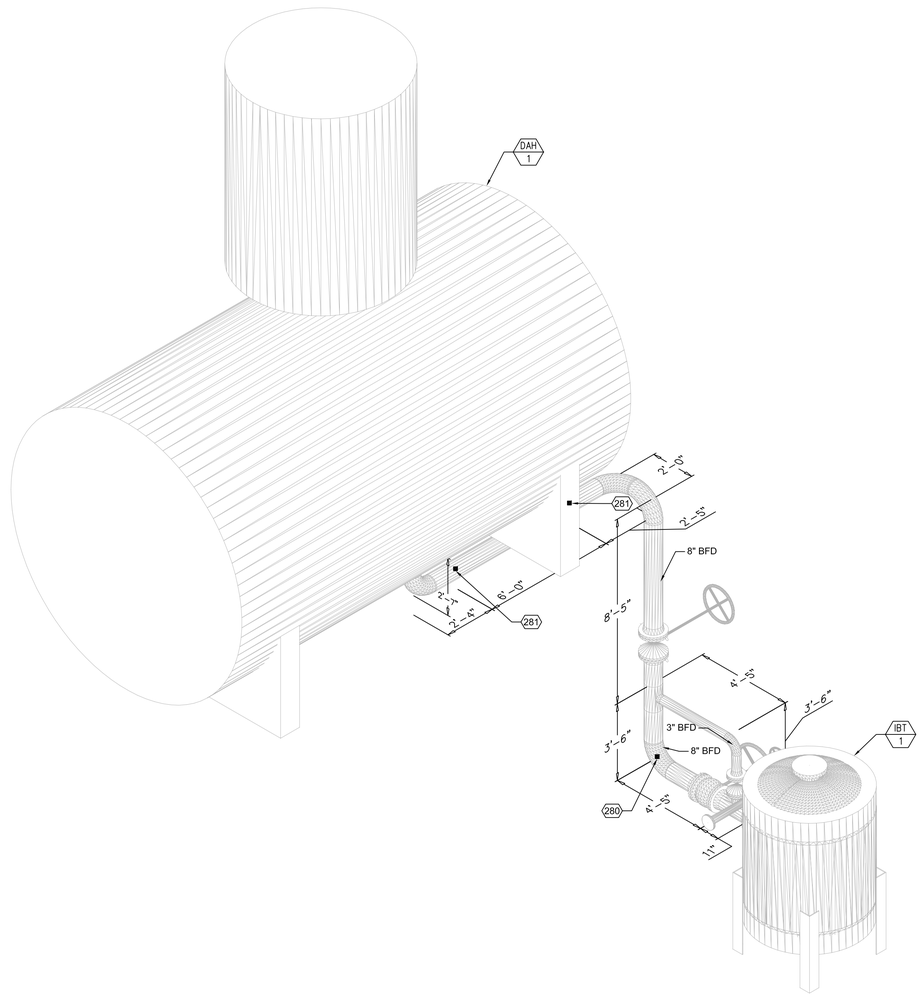

1 M804 M804 PIPING ISOMETRIC - FWD
SCALE: 3/8" = 1'-0"

N

ZONE	LETTER	DESCRIPTION	DRAWN	DATE	APPRVD

REVISIONS

DRAWN J.HO	DATE
DESIGNED M.CALLAHAN	DATE
CHECKED P.YALLOURIS	DATE
A&E PM G.HITE	DATE
NASA PM W.LEE	DATE
REQUESTER G.RAICHE	DATE
R&QA	DATE
SAFETY/PSM D.FRASER	DATE
SUPERVISOR S.FRANKEL	DATE

REGISTERED PROFESSIONAL ENGINEER MICHAEL S. CALLAHAN No. M21188 MECHANICAL STATE OF CALIFORNIA

Ames Research Center
Moffett Field, California

REPLACE ARC JET COMPLEX SVS BOILER
MECHANICAL

PIPING ISOMETRIC - FWD

SIZE	CAGE CODE	
D	25307	A 231-1300-M804 REV
SCALE NONE	INDEX	SHEET OF

FILE NAME:
231-M804.DWG 12/12/12

DWG: R:\234\M\0212032.0001 (K11027) Replace Arc Jet Complex SVS Boiler Final Design\500 CAD\M\Sheet\231-M804__PIPING ISO-FWD.dwg Version: 18.1s (LMS Tech) User: jlho
DATE: Feb 01, 2013 - 12:53:33 pm

DWG NO.	SH.	REV
A231-1300-M805	1	

SHEET NOTES

1. SEE SHEET M601, M602 AND M603 FOR EQUIPMENT AND PIPE SCHEDULES.
2. PIPE INSULATION ARE NOT SHOWN. SEE SCHEDULE ON SHEET M603 FOR PIPE INSULATION PER SYSTEM.
3. SEE PIPE SUPPORT SCHEDULE ON DRAWING M603 FOR PIPE SUPPORT DETAIL.

KEY NOTES

1. DESIGN-BUILD PIPING: KEY NOTED PIPING SECTIONS HAVE BEEN PRE-ENGINEERED AND THE DESIGN MAY BE USED WITHOUT FURTHER ANALYSIS, IF DRAWING REQUIREMENTS AND CONFIGURATION ARE IMPLEMENTED WITHOUT MODIFICATION.
2. BOILER MANUFACTURER SUPPLIED PIPE STANCHION.

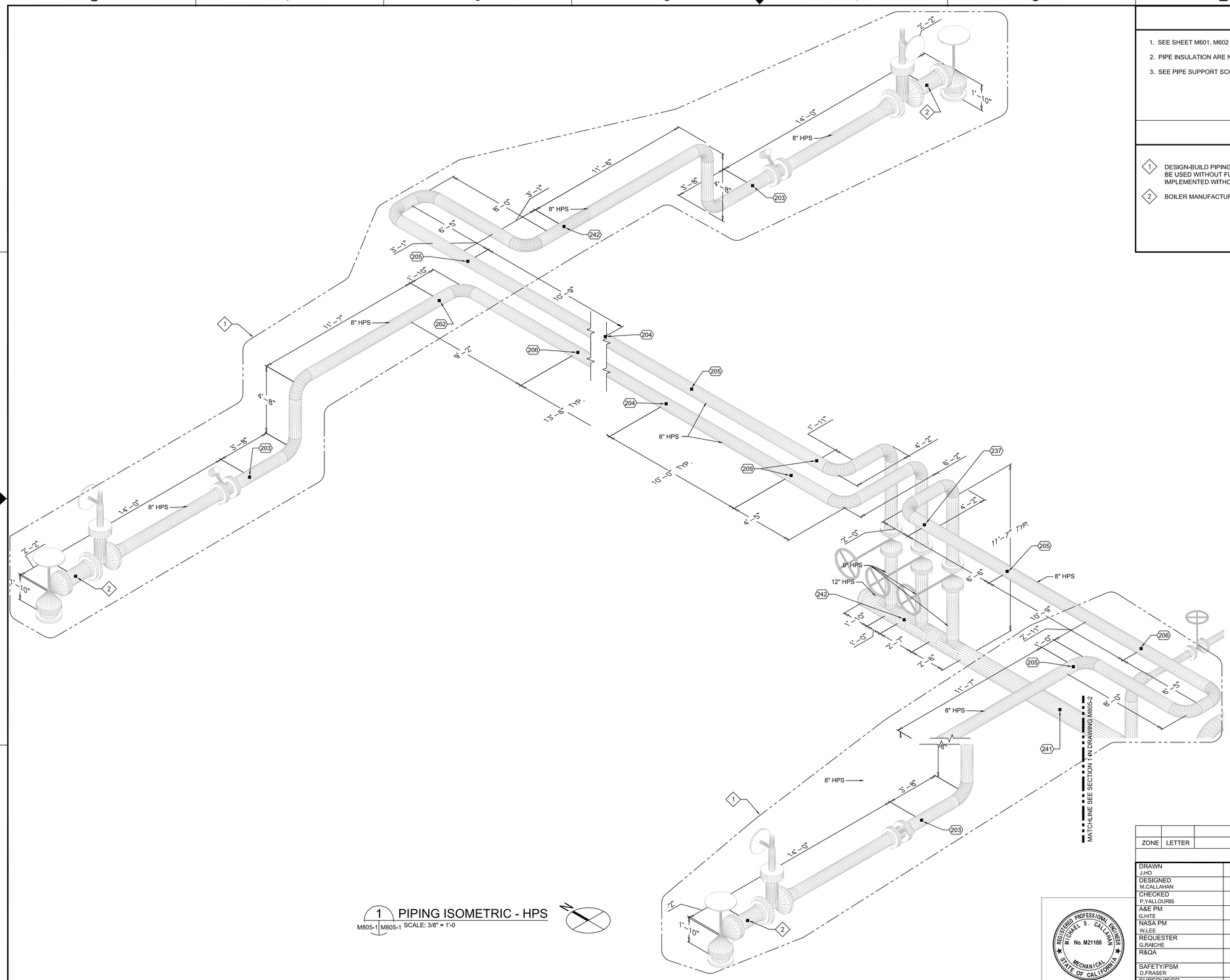

1 PIPING ISOMETRIC - HPS
M805-1 | M805-1 SCALE: 3/8" = 1'-0

ZONE	LETTER	DESCRIPTION	DRAWN	DATE	APPRVD

REVISIONS

DRAWN J.HO	DATE
DESIGNED M.CALLAHAN	DATE
CHECKED P.YALLOURIS	DATE
A&E PM G.HITE	DATE
NASA PM W.LEE	DATE
REQUESTER G.RAICHE	DATE
R&QA	DATE
SAFETY/PSM D.FRASER	DATE
SUPERVISOR S.FRANKEL	DATE

REGISTERED PROFESSIONAL ENGINEER MICHAEL S. CALLAHAN No. M21188 MECHANICAL STATE OF CALIFORNIA

Ames Research Center
Moffett Field, California

REPLACE ARC JET COMPLEX SVS BOILER
MECHANICAL

PIPING ISOMETRIC - HPS (SHEET 1 OF 2)

SIZE	CAGE CODE		REV
D	25307	231-1300-M805	A
SCALE NONE		INDEX	SHEET 1 OF 2

FILE NAME: 231-M805-1.DWG 12/12/12

DWG: P:\234A\6021\2932.0001 (K11027) Replace Arcjet Complex SVS Boiler Final Design\500 CAD\M\Sheet\231-M805-1_PIPING ISO-HPS.dwg Version: 18.1s (LMS Tech) User: jjho
DATE: Feb 01, 2013 - 12:53:42 pm

DWG NO.	SH.	REV
A231-1300-M805	2	

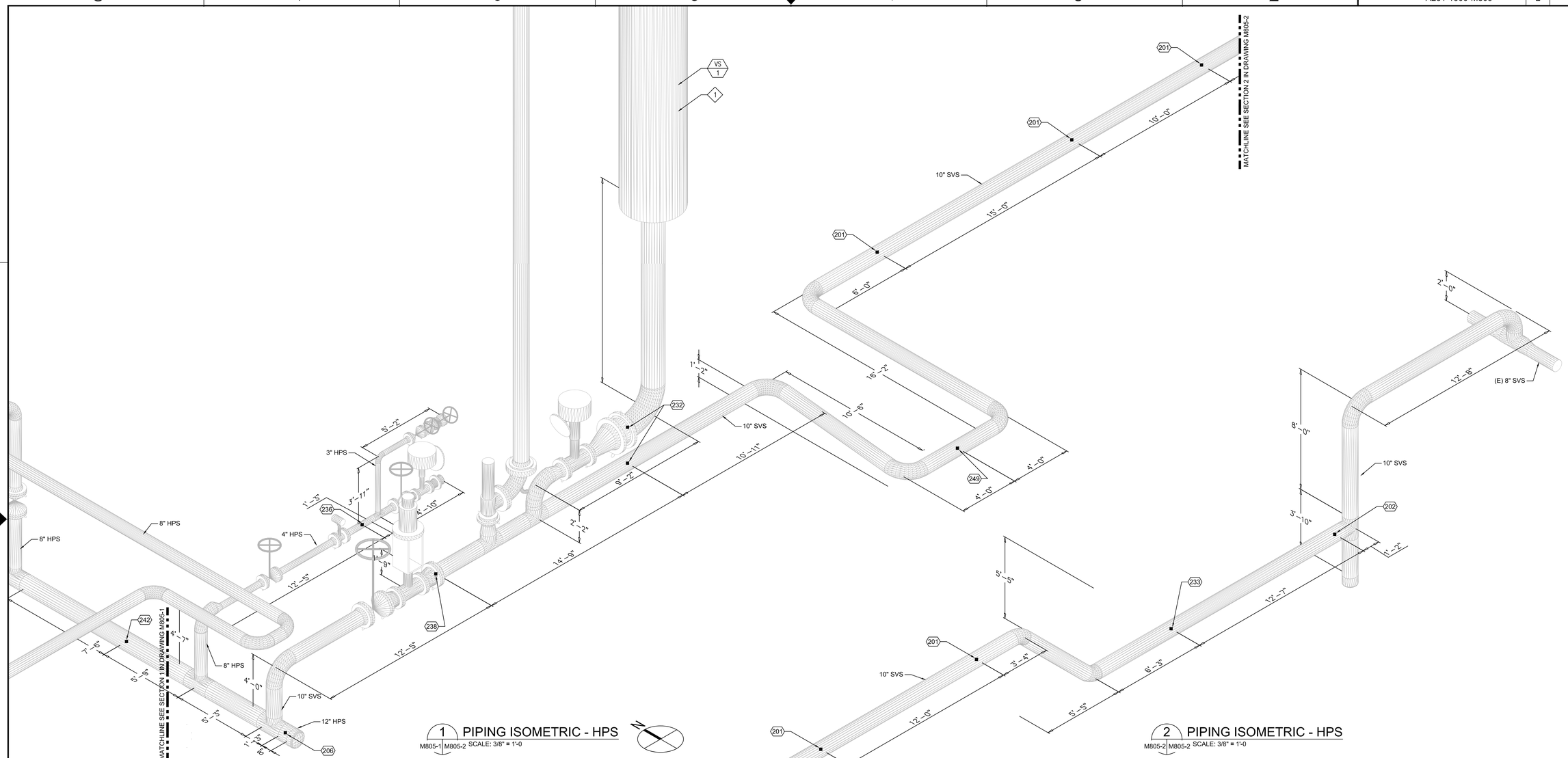

1 PIPING ISOMETRIC - HPS
M805-1 | M805-2 SCALE: 3/8" = 1'-0

2 PIPING ISOMETRIC - HPS
M805-2 | M805-2 SCALE: 3/8" = 1'-0

SHEET NOTES

1. SEE SHEET M601, M602 AND M603 FOR EQUIPMENT AND PIPE SCHEDULES.
2. PIPE INSULATION ARE NOT SHOWN. SEE SCHEDULE ON SHEET M603 FOR PIPE INSULATION PER SYSTEM.
3. SEE PIPE SUPPORT SCHEDULE ON DRAWING M603 FOR PIPE SUPPORT DETAIL.

KEY NOTES

1. FOR SILENCER MOUNTING, REFER TO DRAWING S104 FOR DETAIL.

ZONE	LETTER	DESCRIPTION	DRAWN	DATE	APPRVD

REVISIONS

DRAWN J.HO	DATE	
DESIGNED M.CALLAHAN	DATE	
CHECKED P.YALLOURIS	DATE	
A&E PM G.HTE	DATE	
NASA PM W.LEE	DATE	
REQUESTER G.RAICHE	DATE	
R&QA	DATE	
SAFETY/PSM D.FRASER	DATE	
SUPERVISOR S.FRANKEL	DATE	

REGISTERED PROFESSIONAL ENGINEER MICHAEL S. CALLAHAN No. M21188 MECHANICAL STATE OF CALIFORNIA

Ames Research Center
Moffett Field, California

REPLACE ARC JET COMPLEX SVS BOILER
MECHANICAL

PIPING ISOMETRIC - HPS (SHEET 2 OF 2)

SIZE	CAGE CODE		REV
D	25307	A 231-1300-M805	
SCALE NONE		INDEX	SHEET 2 OF 2

FILE NAME: 231-M805-2.DWG 12/12/12

DWG: R:\234AI\60212932.0001 (K11027) Replace Arc Jet Complex SVS Boiler Final Design\500 CAD\M\Sheet\231-M805-2_PIPING ISO-HPS.dwg Version: 18.1s (LMS Tech) User: jjho
DATE: Feb 01, 2013 - 12:53:52 pm

DWG NO.	SH.	REV
A231-1300-M806		

SHEET NOTES

1. SEE SHEET M601, M602 AND M603 FOR EQUIPMENT AND PIPE SCHEDULES.
2. PIPE INSULATION ARE NOT SHOWN. SEE SCHEDULE ON SHEET M603 FOR PIPE INSULATION PER SYSTEM.
3. SEE PIPE SUPPORT SCHEDULE ON DRAWING M603 FOR PIPE SUPPORT DETAIL.

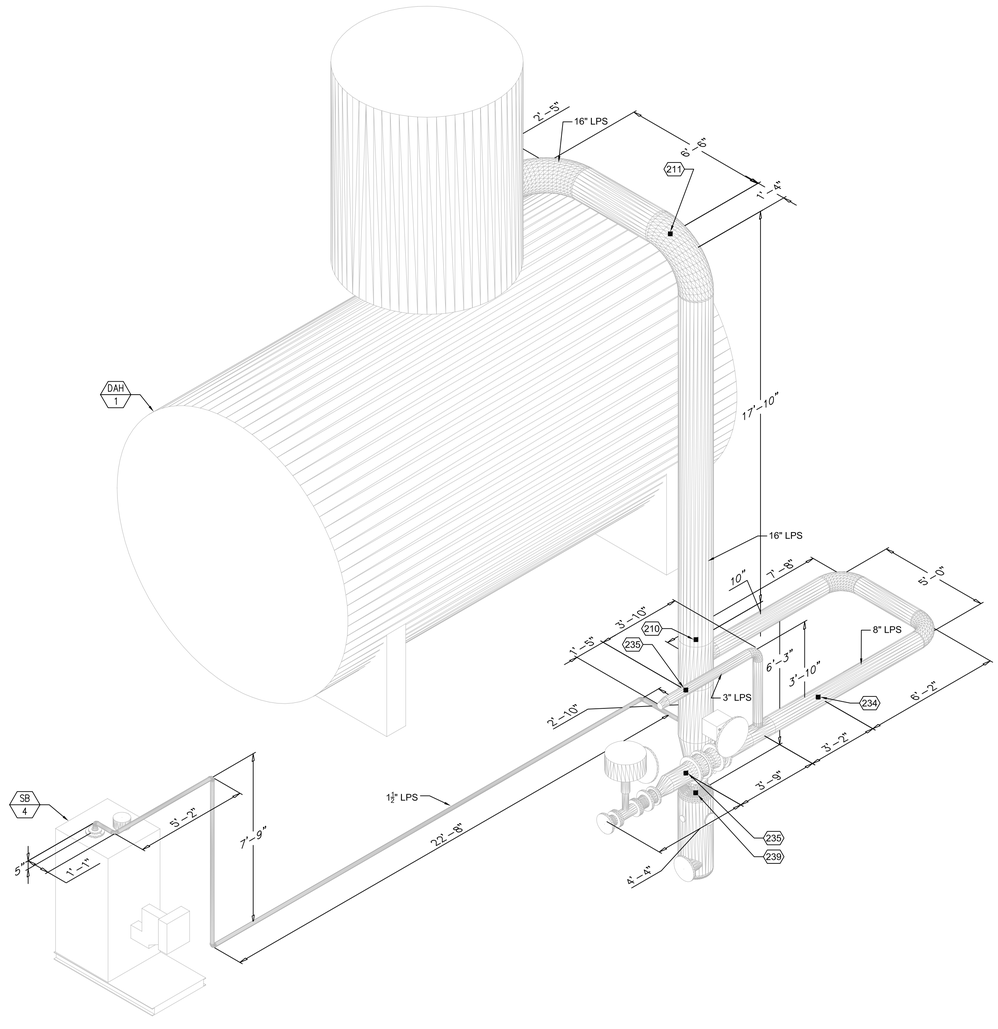

1 PIPING ISOMETRIC - LPS
M806 M806 SCALE: 3/8" = 1'-0"

KEY NOTES

ZONE	LETTER	DESCRIPTION	DRAWN	DATE	APPRVD

REVISIONS

DRAWN J.HO	DATE
DESIGNED M.CALLAHAN	DATE
CHECKED P.YALLOURIS	DATE
A&E PM G.HITE	DATE
NASA PM W.LEE	DATE
REQUESTER G.RAICHE	DATE
R&QA	DATE
SAFETY/PSM D.FRASER	DATE
SUPERVISOR S.FRANKEL	DATE

REGISTERED PROFESSIONAL ENGINEER MICHAEL S. CALLAHAN No. M21188 MECHANICAL STATE OF CALIFORNIA

Ames Research Center
Moffett Field, California

REPLACE ARC JET COMPLEX SVS BOILER
MECHANICAL

PIPING ISOMETRIC - LPS

SIZE	CAGE CODE		REV
D	25307	231-1300-M806	
SCALE NONE		INDEX	SHEET OF

FILE NAME: 231-M806.DWG 12/12/12

DWG:R:\234A\60212932.0001 (K11027) Replace Arc-Ject Complex SVS Boiler Final Design\500 CAD\MSheet\231-M806_PIPING ISO-LPS.dwg Version: 18.1s (LMS Tech) User: jjho
DATE: Feb 01, 2013 - 12:54:02 pm

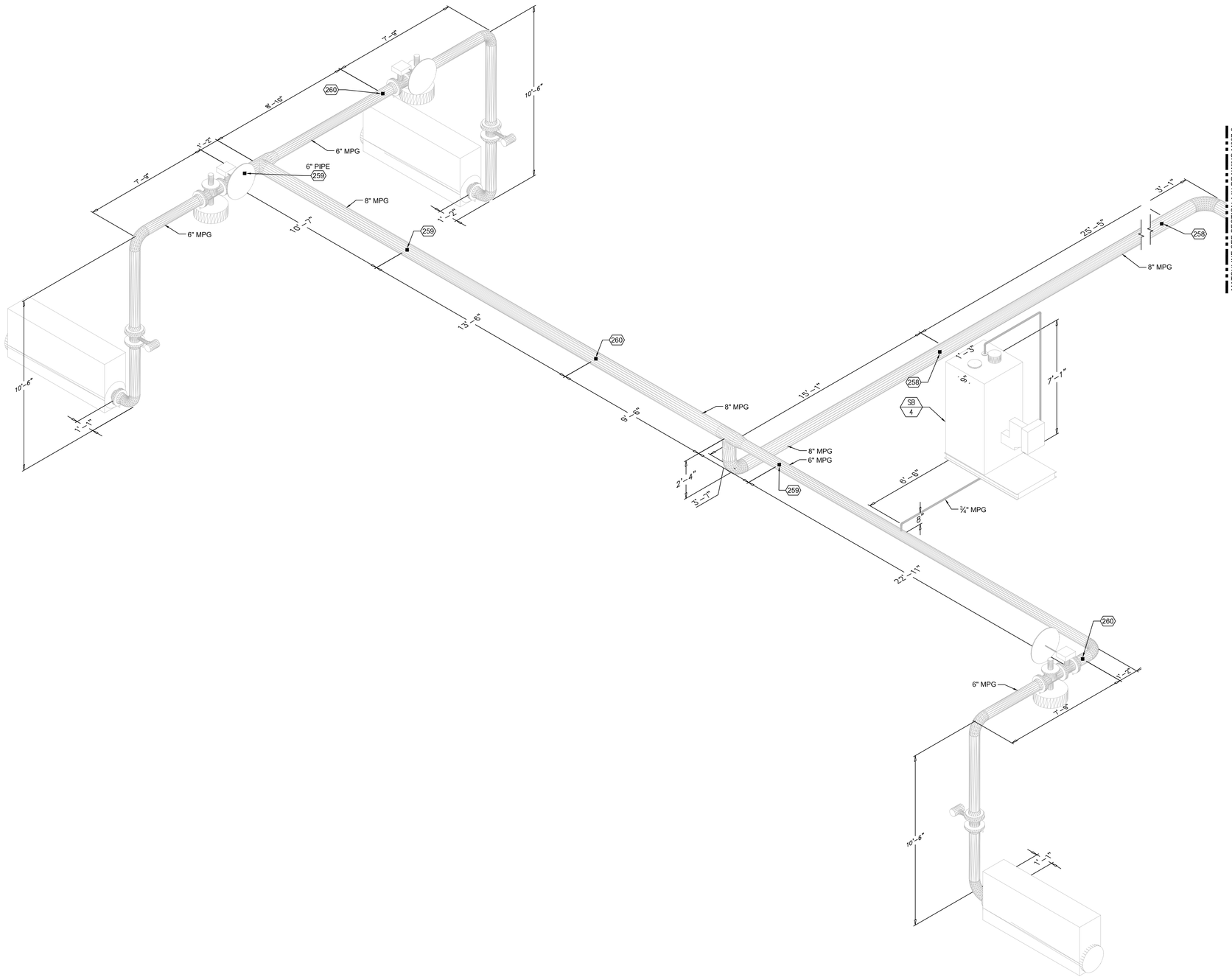

1 PIPING ISOMETRIC - MPG
M807-1 M807-1 SCALE: 3/8" = 1'-0"

SHEET NOTES

1. SEE SHEET M601, M602 AND M603 FOR EQUIPMENT AND PIPE SCHEDULES.

KEY NOTES

ZONE	LETTER	DESCRIPTION	DRAWN	DATE	APPRVD

REVISIONS

DRAWN J.HO	DATE
DESIGNED M.CALLAHAN	DATE
CHECKED P.YALLOURIS	DATE
A&E PM G.HITE	DATE
NASA PM W.LEE	DATE
REQUESTER G.RAICHE	DATE
R&QA	DATE
SAFETY/PSM D.FRASER	DATE
SUPERVISOR S.FRANKEL	DATE

REGISTERED PROFESSIONAL ENGINEER MICHAEL S. CALLAHAN No. M21188 MECHANICAL STATE OF CALIFORNIA

Ames Research Center
Moffett Field, California

REPLACE ARC JET COMPLEX SVS BOILER
MECHANICAL

PIPING ISOMETRIC - MPG
(SHEET 1 OF 2)

SIZE	CAGE CODE	
D	25307	A 231-1300-M807 REV
SCALE NONE	INDEX	SHEET 1 OF 2

FILE NAME: 231-M807-1.DWG 12/12/12

DWG: R:\234\A60212032.0001 (KK1027) Replace Arc Jet Complex SVS Boiler Final Design\500 CAD\M\Sheet\231-M807-1_PIPING ISO-MPG.dwg Version: 18.1s (LMS Tech) User: jjho
DATE: Feb 01, 2013 - 12:54:11 pm

DWG NO.	SH.	REV
A231-1300-M807	2	

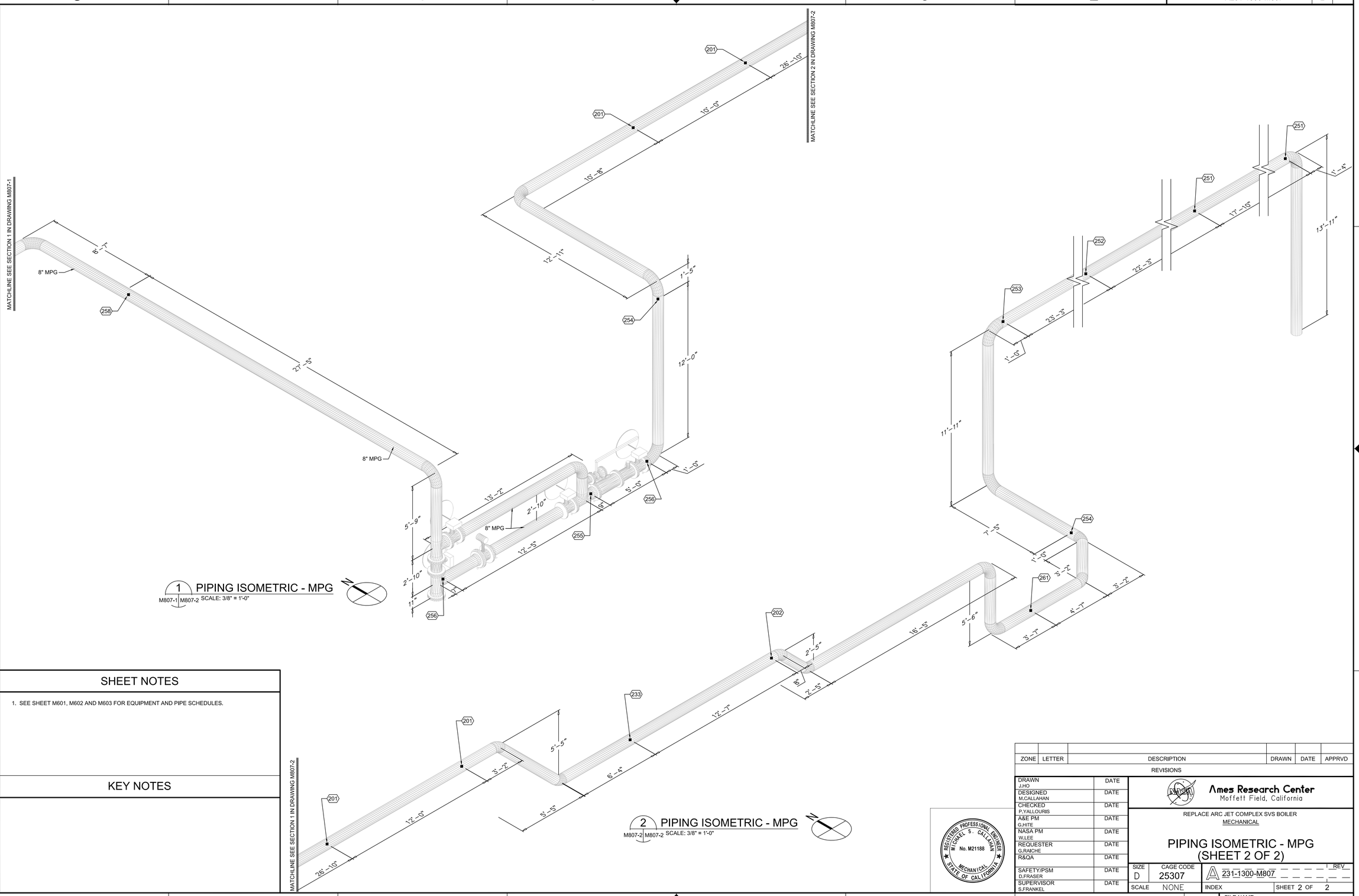

1 PIPING ISOMETRIC - MPG
M807-1 M807-2 SCALE: 3/8" = 1'-0"

2 PIPING ISOMETRIC - MPG
M807-2 M807-2 SCALE: 3/8" = 1'-0"

SHEET NOTES

1. SEE SHEET M601, M602 AND M603 FOR EQUIPMENT AND PIPE SCHEDULES.

KEY NOTES

ZONE	LETTER	DESCRIPTION	DRAWN	DATE	APPRVD

REVISIONS

DRAWN J.HO	DATE	
DESIGNED M.CALLAHAN	DATE	
CHECKED P.YALLOURIS	DATE	
A&E PM G.HITE	DATE	
NASA PM W.LEE	DATE	
REQUESTER G.RAICHE	DATE	
R&QA	DATE	
SAFETY/PSM D.FRASER	DATE	
SUPERVISOR S.FRANKEL	DATE	

REGISTERED PROFESSIONAL ENGINEER MICHAEL S. CALLAHAN No. M21188 MECHANICAL STATE OF CALIFORNIA

Ames Research Center
Moffett Field, California

REPLACE ARC JET COMPLEX SVS BOILER
MECHANICAL

PIPING ISOMETRIC - MPG (SHEET 2 OF 2)

SIZE	CAGE CODE		REV
D	25307	231-1300-M807	
SCALE NONE		INDEX	SHEET 2 OF 2

FILE NAME: 231-M807-2.DWG 12/12/12

DWG: P:\234A\6021\2932.0001 (K11027) Replace Arcjet Complex SVS Boiler Final Design\500 CAD\M\Sheet\231-M807-2_ PIPING ISO-MPG.dwg Version: 18.1s (LMS Tech) User: jjho
DATE: Feb 01, 2013 - 12:54:20 pm

DWG NO.	SH.	REV
A231-1300-M808	1	

SHEET NOTES

1. SEE SHEET M601, M602 AND M603 FOR EQUIPMENT AND PIPE SCHEDULES.
2. PIPE INSULATION ARE NOT SHOWN. SEE SCHEDULE ON SHEET M603 FOR PIPE INSULATION PER SYSTEM.
3. SEE PIPE SUPPORT SCHEDULE ON DRAWING M603 FOR PIPE SUPPORT DETAIL.

KEY NOTES

1. DESIGN-BUILD PIPING: KEY NOTED PIPING SECTIONS HAVE BEEN PRE-ENGINEERED AND THE DESIGN MAY BE USED WITHOUT FURTHER ANALYSIS, IF DRAWING REQUIREMENTS AND CONFIGURATION ARE IMPLEMENTED WITHOUT MODIFICATION.
2. 6 INCH THREE DIAMETER RADIUS ELBOW.
3. PROVIDE VERTICAL SUPPORT FOR INLINE PUMP MOTOR.

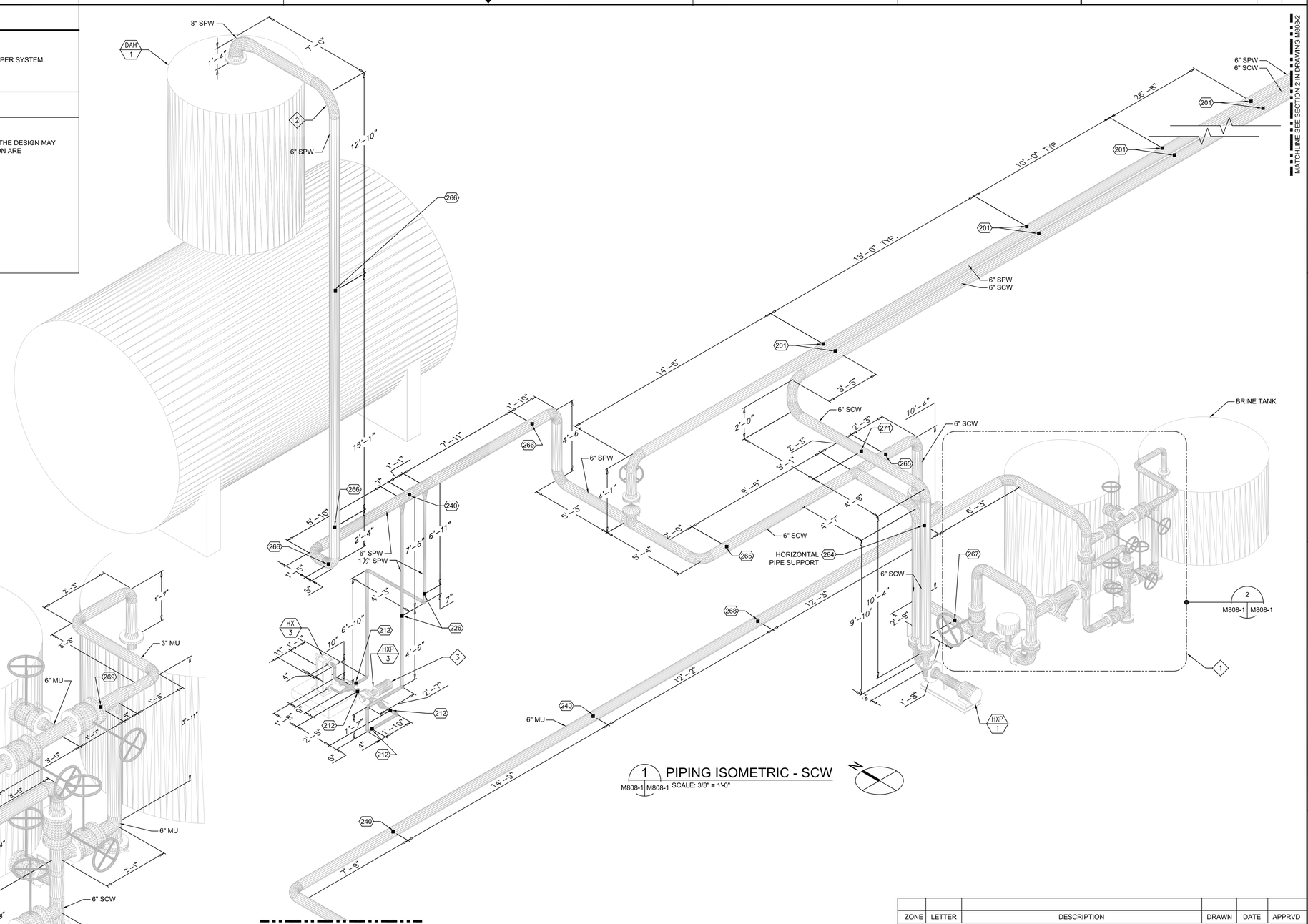

1 PIPING ISOMETRIC - SCW
M808-1 M808-1 SCALE: 3/8" = 1'-0"

2 SECTION - SCW
M808-1 M808-1 SCALE: 3/4" = 1'-0"

ZONE	LETTER	DESCRIPTION	DRAWN	DATE	APPRVD

REVISIONS

DRAWN J.HO	DATE	
DESIGNED M.CALLAHAN	DATE	
CHECKED P.YALLOURIS	DATE	
A&E PM G.HITE	DATE	
NASA PM W.LEE	DATE	
REQUESTER G.RAICHE	DATE	
R&QA	DATE	
SAFETY/PSM D.FRASER	DATE	
SUPERVISOR S.FRANKEL	DATE	

REGISTERED PROFESSIONAL ENGINEER MICHAEL S. CALLAHAN No. M21188 MECHANICAL STATE OF CALIFORNIA

Ames Research Center
Moffett Field, California

REPLACE ARC JET COMPLEX SVS BOILER
MECHANICAL

PIPING ISOMETRIC - SCW (SHEET 1 OF 2)

SIZE	CAGE CODE		REV
D	25307	231-1300-M808	
SCALE NONE		INDEX	SHEET 1 OF 2

FILE NAME: 231-M808-1.DWG 12/12/12

DWG: P:\234\N\60210302.0001 (1K11027) Replace Arc/Ject Complex SVS Boiler Final Design\500 CAD\MSheet\231-M808-1_ PIPING ISO-SCW.dwg Version: 18.1s (LMS Tech) User: jjho
DATE: Feb 01, 2013 - 12:54:31 pm

DWG NO.	SH.	REV
A231-1300-M808	2	

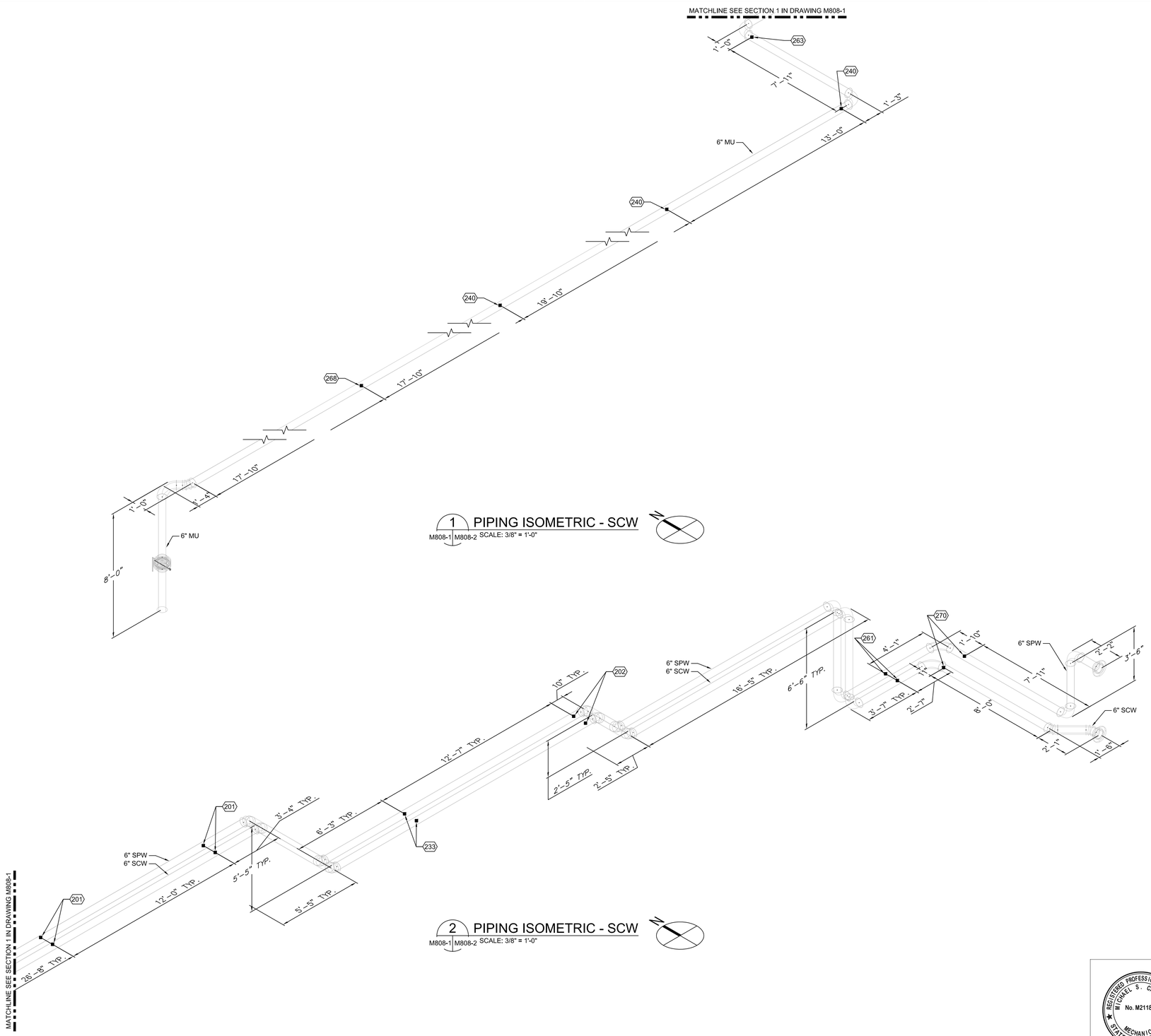

SHEET NOTES

1. SEE SHEET M601, M602 AND M603 FOR EQUIPMENT AND PIPE SCHEDULES.
2. PIPE INSULATION ARE NOT SHOWN. SEE SCHEDULE ON SHEET M603 FOR PIPE INSULATION PER SYSTEM.
3. SEE PIPE SUPPORT SCHEDULE ON DRAWING M603 FOR PIPE SUPPORT DETAIL.

KEY NOTES

ZONE	LETTER	DESCRIPTION	DRAWN	DATE	APPRVD

REVISIONS

DRAWN J.HO	DATE	
DESIGNED M.CALLAHAN	DATE	
CHECKED P.YALLOURIS	DATE	
A&E PM G.HITE	DATE	
NASA PM W.LEE	DATE	
REQUESTER G.RAICHE	DATE	
R&QA	DATE	
SAFETY/PSM D.FRASER	DATE	
SUPERVISOR S.FRANKEL	DATE	

REGISTERED PROFESSIONAL ENGINEER MICHAEL S. CALLAHAN No. M21188 MECHANICAL STATE OF CALIFORNIA

Ames Research Center
Moffett Field, California

REPLACE ARC JET COMPLEX SVS BOILER
MECHANICAL

PIPING ISOMETRIC - SCW (SHEET 2 OF 2)

SIZE	CAGE CODE		REV
D	25307	A 231-1300-M808	
SCALE NONE		INDEX	SHEET 2 OF 2

FILE NAME: 231-M808-2.DWG 12/12/12

DWG: R:\234A\80231202.0001 (K11027) Replace ArcJect Complex SVS Boiler Final Design\500 CAD\MSheet\231-M808-2_PIPING ISO-SCW.dwg Version: 18.1s (LMS Tech) User: jjho
DATE: Feb 01, 2013 - 12:54:45 pm

DWG NO.	SH.	REV
A231-1300-E001		

ELECTRICAL NOTES

1. THE COMPLETE ELECTRICAL INSTALLATION SHALL BE IN ACCORDANCE WITH THE CALIFORNIA ELECTRICAL CODE, 2010 AND NATIONAL ELECTRICAL SAFETY CODE (LATEST EDITION).
2. CONDUCTOR SIZES ARE AWG UNLESS SHOWN AS KCMIL.
3. ALL MATERIALS AND EQUIPMENT FURNISHED BY ELECTRICAL CONTRACTOR SHALL BE NEW UNLESS OTHERWISE NOTED.
4. DARK OR HEAVY LINES INDICATE NEW WORK. LIGHT LINES DENOTE EXISTING CONDITIONS.
5. EXISTING CONDITIONS: THESE DRAWINGS SHOW EXISTING EQUIPMENT, MATERIAL, WIRING, ETC. BASED UPON THE BEST AVAILABLE INFORMATION. CONTRACTOR SHALL CONFIRM EXISTING CONDITIONS, WIRING, LOCATION OF EQUIPMENT, DIMENSIONS, ETC PRIOR TO STARTING ANY WORK OR ORDERING ANY MATERIAL. CONTRACTOR SHALL BE RESPONSIBLE FOR LOCATING EXISTING UNDERGROUND UTILITIES, CORRECTING DISCREPANCIES AND PROVIDING A COMPLETE PROPER OPERATING SYSTEM.
6. NOT USED.
7. EXISTING EQUIPMENT AND/OR ELECTRICAL WIRING WHICH IS TO REMAIN, BUT HAS TO BE REMOVED TO FACILITATE THE INSTALLATION OF THE NEW EQUIPMENT SHALL BE RESTORED TO ITS ORIGINAL OPERATING CONDITION.
8. INSTALLATION OF ELECTRICAL EQUIPMENT, RACEWAYS, STRUCTURES AND FOUNDATIONS SHALL BE BASED UPON CRITERIA OF SEISMIC AND WIND OF CBC (CALIFORNIA BUILDING CODE) 2010 EDITION. U.O.N. ON DWGS. STRUCTURAL CALCULATIONS AND DRAWINGS SHALL BE STAMPED BY A PROFESSIONAL CIVIL ENGINEER LICENSED BY THE STATE OF CALIFORNIA AND SHALL BE SUBMITTED TO COR PRIOR TO FABRICATION/CONSTRUCTION. FOR STRUCTURAL DESIGN CRITERIA, SEE DWG S001.
9. EXISTING CONDUCTORS REMOVED FROM SERVICE SHALL NOT BE USED FOR NEW WORK UNDER THIS CONTRACT, UNLESS OTHERWISE NOTED.
10. EXISTING CONDUIT RUNS REMAINING IN PLACE MAY BE UTILIZED FOR THE NEW WORK, PROVIDED THAT THE CONDUIT IS OF ADEQUATE SIZE PER CALIFORNIA ELECTRICAL CODE FOR THE NUMBER AND SIZE OF CONDUCTORS BEING INSTALLED. CONDUCTORS SHALL BE OF THE SAME VOLTAGE. CONTRACTOR SHALL PULL A HARD MANDREL THROUGH CONDUITS AND VERIFY THAT CABLES CAN BE PULLED SAFELY WITHOUT DAMAGE TO CABLE JACKET.
11. THE CONTRACTOR SHALL SUBMIT A UTILITY OUTAGE REQUEST AND EXPECTED LENGTH OF THE POWER INTERRUPTION TO THE COR FOR APPROVAL IN NO LESS THAN TEN (10) CALENDAR DAYS PRIOR TO A REQUIRED UTILITY OUTAGE (ELECTRICAL, TELEPHONE). NO OUTAGE SHALL BE ACCOMPLISHED PRIOR TO THE RECEIPT OF APPROVAL. NASA SHALL PERFORM ALL SWITCHING 6900V AND ABOVE. THE CONTRACTOR SHALL PERFORM ALL SWITCHING BELOW 6900V, IN ACCORDANCE WITH AMES HEALTH & SAFETY MANUAL APR 1700.1 CHAPTER 31. TIMES FOR THESE SHUTDOWNS ARE FROM 6:00 AM, SATURDAY MORNING TO 5:00 PM, SUNDAY AFTERNOON; AND FROM 6:00 AM TO 5:00 PM ON HOLIDAYS.
12. POWER DISRUPTION OVER 48 HOURS MAY CAUSE THE LOSS OF THE FIRE ALARM SYSTEM SERVICE. CONTRACTOR SHALL NOTIFY THE FIRE DEPARTMENT OF THE LOSS OF ALARMS IF THIS OCCURS.
13. CONTRACTOR SHALL STRICTLY FOLLOW ALL STANDARD SAFETY PRACTICES, PRECAUTIONS, AND REQUIREMENTS OF NASA-AMES RESEARCH CENTER FOR ALL WORK INSIDE AN ENCLOSED AND ENERGIZED 115kV SUBSTATION. REFER TO AMES HEALTH & SAFETY MANUAL APR 1700.1, CHAPTER 11.
14. ALL WIRES SHALL BE TAGGED FOR IDENTIFICATION BEFORE DISCONNECTION.
15. ALL WORK IN THIS CONTRACT SHALL BE COORDINATED WITH THE COR TO AVOID CONFLICT OF ACTIVITIES WITH OTHER CONTRACTS IN PROGRESS.
16. REPAIR DAMAGES TO GALVANIZED STEEL MEMBERS USING ASTM A780 ZINC RICH PAINT. PAINT ALL NEW HOLES DRILLED ON EXISTING GALVANIZED STEEL MEMBERS. DO NOT HEAT SURFACES TO WHICH REPAIR PAINT HAS BEEN APPLIED.
17. ALL CABLES SHALL BE SUPPORTED PROPERLY AND ROUTED NEATLY ALONG THE MANHOLE WALL.
18. ALL NEW SPARE CONDUITS SHALL BE PROVIDED WITH A 1/4" NYLON PULL LINE PRIOR TO CAPPING. PROVIDE IDENTIFICATION LABELS AND TAG SPARE CONDUITS INDICATING ORIGIN AND DESTINATION AT BOTH ENDS.
19. NEW CONDUITS SHALL BE SEALED AND FIRE PROOFED AT ENTRIES TO MANHOLES/VAULTS.
20. ALL MV FEEDER CABLES SHALL HAVE PHASE IDENTIFICATION AND FEEDER TAGS IN MANHOLES.
21. CABLE AND WIRE USED SHALL MEET THE FOLLOWING:
    THHN - 90°C (DRY)
    THWN - 75°C (WET)
    THWN-2 - 90°C (WET)
22. ALL PENETRATIONS THROUGH FIRE RATED WALLS SHALL BE TOTALLY SEALED TO PREVENT THE SPREAD OF SMOKE, FIRE, TOXIC GASES, AND WATER THROUGH THE PENETRATION BEFORE, DURING AND AFTER A FIRE CONDITION. THE FIRE RATING OF THE SEALED PENETRATION SHALL BE AT LEAST THAT OF THE WALL INTO WHICH IT IS INSTALLED. THE SEAL SHALL PERMIT THE VIBRATION, EXPANSION AND/OR CONTRACTION OF THE CONDUIT PASSING THROUGH THE PENETRATION WITHOUT THE SEAL CRACKING OR CRUMBLING. CONFORM TO CEC, 2010.
23. PRIOR TO START OF WORK, CONTRACTOR SHALL SUBMIT A COMPREHENSIVE SAFETY PROGRAM TO THE COR FOR APPROVAL BY THE NASA SAFETY OFFICE. ALL SAFETY ITEMS WILL BE DISCUSSED AT THE PRE-CONSTRUCTION MEETING.
24. THE CONTRACTOR SHALL OBTAIN A VALID AIR QUALITY PERMIT FOR THE TEMPORARY POWER GENERATOR WHICH SHALL BE POSTED AT A VISIBLE LOCATION ON THE GENERATOR UNIT. ALL PERMIT CONDITIONS SHALL BE COMPLIED WITH AND RECORDS SHALL BE SUBMITTED TO THE COR.
25. PROVIDE WARNING LABELS FOR ARC FLASH AND SHOCK HAZARD PROTECTION ON ALL SWITCHBOARDS, PLANEL BOARD, INDUSTRIAL CONTROL PANELS AND MOTOR CONTROL CENTERS IN ACCORDANCE WITH CEC ARTICLE 110. SEE THE COR FOR SAMPLES OF NASA APPROVED LABELS.
26. PRIOR TO DISCONNECTION OF ANY CIRCUIT. CONTRACTOR SHALL FIELD VERIFY. TRACE, IDENTIFY, LOCK/TAG AND CONFIRM ACTUAL CIRCUITING AND LOAD CONDITIONS OF EACH CIRCUIT TO BE USED IN NEW WORK. CONTRACTOR SHALL PROVIDE AS-BUILT CONDITIONS AND UPDATE IDENTIFICATION LABELS.
27. ALL PERSONNEL WORKING IN MANHOLES (MH) SHALL BE CERTIFIED IN ACCORDANCE WITH NASA/OSHA CONFINED SPACE REGULATION 29 CFR 1910.146, CAL OSHA CONFINED SPACE REGULATIONS CCR5156,5157,5158 AND 5159, AND AMES HEALTH AND SAFETY MANUAL APR 1700.1 CHAPTER 26.
28. CONTRACTOR SHALL USE EXTREME CAUTION AND TAKE ALL NECESSARY SAFETY PRECAUTIONS WHEN WORKING IN THE MANHOLES. MULTIPLE SYSTEM VOLTAGES MAY EXIST IN THE MANHOLES AND CAN BE ANY COMBINATION OF THE FOLLOWING:
    13.8KV
    6.9KV
    480V
    208Y/120V
    480Y/277V
    COMM CIRCUITS
29. THE CONTRACTOR SHALL NOTIFY THE COR AT LEAST SEVEN (7) DAYS IN ADVANCE TO REQUEST DEWATERING OF EXISTING MANHOLES (MH).
30. WHEN WORKING IN MANHOLES, CONTRACTOR SHALL COMPLY WITH NOTES 27 & 28. CONTRACTOR SHALL ASSUME THAT ALL MANHOLES CONTAIN ASBESTOS OR LEAD MATERIALS. EXTREME CARE SHALL BE MADE WHEN REMOVING MATERIALS FROM MANHOLES.
31. THE CONTRACTOR SHALL PROVIDE CABLE RACK CHANNELS, ARMS AND INSULATORS TO SUPPORT NEW CABLES, SPLICES, AND DEADBREAK JUNCTIONS IF NECESSARY. CABLE SHALL BE SECURED TO INSULATORS WITH TWO CROSSED TY-RAPS.
32. LABEL ALL WIRING DEVICES WITH PANEL BOARD AND CIRCUIT NUMBER ON COVER PLATE WITH INSCRIBED LETTERS INDICATING CIRCUIT AND SOURCE PANEL. USE EMBOSSED, PLASTIC, SELF-ADHESIVE TAPE, WHITE ON BLACK, WITH 3/16" MINIMUM TEXT HEIGHT. USE WHITE ON RED FOR EMERGENCY CIRCUITS.

ELECTRICAL NOTES (CON'T)

33. ALL BUILDING EXTERIOR MOUNTED EQUIPMENT AND DEVICES SHALL BE WEATHERPROOF AND MOUNTED IN NEMA 3R ENCLOSURE.
34. ALL RECEPTACLES AND TELEPHONE/DATA OUTLETS SHALL BE MOUNTED AT 15" AFF UNLESS OTHERWISE NOTED. MOUNT ALL TOGGLE SWITCHES AT 42" AFF UON.
35. VERIFY FINAL LOCATIONS OF ALL EQUIPMENT, FIXTURES OR OUTLETS WITH OTHER TRADES PRIOR TO ROUGH-IN.
36. ALL NON-CURRENT CARRYING METAL PARTS OF EQUIPMENT, LIGHTING FIXTURES, ETC., SHALL BE GROUNDED BY MEANS OF A GREEN INSULATED GROUND WIRE RUN IN RACEWAY WITH SUPPLY CONDUCTORS. PROVIDE A GREEN GROUND CONDUCTOR IN ALL BRANCH LIGHTING AND POWER CIRCUITS WHETHER INDICATED ON THE DRAWINGS OR NOT SPECIFICALLY SHOWN. THE GROUND WIRE SHALL BE SIZED IN ACCORDANCE WITH THE CEC, ARTICLE 250.
37. NOT USED.
38. FIELD DETERMINE EXACT ROUTING OF CONDUIT AND PROVIDE PULL BOX AS REQUIRED.
39. ALL WORK SHOWN ON DRAWINGS IS IN PART SCHEMATIC, INTENDED TO CONVEY SCOPE OF WORK AND GENERAL LAYOUT. VERIFY ALL EXISTING CONDITIONS AND MAKE ADJUSTMENT AS REQUIRED.
40. THE CONTRACTOR SHALL INSPECT JOB SITE TO VERIFY FIELD CONDITIONS PRIOR TO THE START OF WORK. NOT ALL EXISTING CONDITIONS ARE INDICATED ON PLANS. CONCEALED CONDITIONS SHALL BE ADDRESSED WITH DUE CAUTION SUCH THAT UTILITIES AND ARE PROTECTED.
41. CONTRACTOR SHALL CUT AND PATCH HOLES IN EXISTING CONSTRUCTION AS REQUIRED FOR NEW WORK WITH DUE CAUTION SUCH THAT STRUCTURAL INTEGRITY IS MAINTAINED. OBTAIN DIRECTION FROM STRUCTURAL ENGINEER LECENSED IN THE STATE OF CALIFORNIA PRIOR TO SAW CUTTING OR BORING HOLES IN CONCRETE WALLS AND FLOORS AND OTHER STRUCTURAL MEMBERS.
42. SYMBOLS AND ABBREVIATIONS ARE SHOWN FOR REFERENCE ONLY. NOT ALL OF THEM MAY BE USED OR SHOWN ON THE DRAWINGS.
43. CONTRACTOR SHALL PROVIDE TYPED UPDATED/CORRECTED PANEL DIRECTORIES WITHIN EACH PANELBOARD PRIOR TO FINAL ACCEPTANCE OF WORK IN PLACE.
44. FIELD VERIFY AVAILABILITY OF SPACE IN EXISTING SWITCHBOARDS AND PANELBOARDS FOR ADDITION OF NEW BREAKERS. PROVIDE ALL HARDWARE FOR MOUNTING.
45. ALL MATERIALS AND EQUIPMENT FURNISHED BY THE CONTRACTOR SHALL BE NEW AND COMPLETELY SERVICEABLE UNLESS OTHERWISE SPECIFIED.
46. ANY WORK INSTALLED INCORRECTLY, OR BEFORE APPROVAL HAS BEEN OFFICIALLY GRANTED FOR THOSE ITEMS AT ISSUE, SHALL BE CORRECTED BY THE ELECTRICAL CONTRACTOR AT NO CHARGE AND BEFORE SUBSEQUENT WORK SHALL PROCEED.
47. NOT USED.
48. UPON COMPLETION OF WORK, THE CONTRACTOR SHALL DEVELOP A TEST PROCEDURE AND PERFORM A COMPLETE FUNCTIONAL TEST TO DEMONSTRATE TO THE CONSTRUCTION MANAGER THAT THE NEW INSTALLATION IS OPERATING AS INTENDED. ANY DEFFECTS OR DEFICIENCIES IN THE MATERIAL OR INSTALLATION WORK SHALL BE CORRECTED IMMEDIATELY BY AND AT THE CONTRACTOR'S EXPENSE.
49. ALL CONDUITS SHALL BE SUPPORTED AND BRACED IN ACCORDANCE WITH SMACNA GUIDELINES FOR SEISMIC HAZARD LEVEL B.

REGISTERED PROFESSIONAL ENGINEER FREDERICK M. JONES No. E14616 ELECTRICAL STATE OF CALIFORNIA

ZONE	LETTER	DESCRIPTION	DRAWN	DATE	APPRVD

REVISIONS

DRAWN H. FORTEZA	DATE
DESIGNED H. FORTEZA	DATE
CHECKED J.McCUSKER	DATE
A&E PM G.HITE	DATE
NASA PM W.LEE	DATE
REQUESTER G.RAICHE	DATE
R&QA -	DATE
SAFETY/PSM	DATE
SUPERVISOR S.FRANKEL	DATE

Ames Research Center
Moffett Field, California

REPLACE ARC JET COMPLEX SVS BOILER
ELECTRICAL

ELECTRICAL NOTES

SIZE	CAGE CODE	
D	25307	A 231-1300-E001 REV
SCALE AS NOTED	INDEX	SHEET OF

FILE NAME: 231-E001.DWG 12/12/12

DWG: R:\23AA60212932.0001 (K11027) Replace ArcJect Complex SVS Boiler Final Design\500 CADE\Sheet\231-E001.dwg Version: 17.1s (LMS Tech) User: wbonaldi
DATE: Jan 28, 2013 - 1:47:53 pm

DWG NO.	SH.	REV
A231-1300-E002		

ELECTRICAL SYMBOLS

GROUNDING

- G — GROUND WIRE (COPPER) EXPOSED
- G — GROUND WIRE (COPPER) CONCEALED/EMBEDDED
- GROUND ROD
- GROUND WELL
- GROUND OR EXOTHERMIC WELD CONNECTION
- GROUND PAD
- GROUND OR BONDING CONNECTION
- GROUND PIGTAIL

LIGHTING

- a,b — 2'x4' FLUORESCENT FIXTURE WITH DUAL LEVEL SWITCHING Sa CONTROLS OUTBOARD LAMPS, AND Sb CONTROLS INBOARD LAMP(S)
- 2' x 4' FLUORESCENT FIXTURE ON EMERGENCY OR UNSWITCHED "NIGHT LIGHT" CIRCUIT
- FLUORESCENT FIXTURE INDUSTRIAL OR STRIP TYPE, SURFACE OF PENDANT MOUNTED
- 1' x 8' FLUORESCENT FIXTURE
- FLUORESCENT FIXTURE ON EMERGENCY CIRCUIT
- 1' x 4' FLUORESCENT FIXTURE
- LED LIGHTING FIXTURES
- 2' x 2' FLUORESCENT FIXTURE
- WALL MOUNTED LIGHT FIXTURE
- EXIT LIGHT, CEILING MOUNTED, ARROW INDICATES DIRECTION OF EGRESS
- EXIT LIGHT, WALL MOUNTED, ARROW INDICATES DIRECTION OF EGRESS
- PE — PHOTO ELECTRIC SWITCH
- PP — POWER PACK
- OCCUPANCY SENSOR (WALL MOUNTED)
- $a — SINGLE POLE LIGHT SWITCH; LOWER CASE LETTER DESIGNATE SWITCHING CONFIGURATION
- $a $b — TWO POLE LIGHT SWITCH; LOWER CASE LETTER DESIGNATE SWITCHING CONFIGURATION
- EMERGENCY LIGHTING FIXTURE W/ BATTERY PACK

RECEPTACLES

- GFI # — DUPLEX RECEPTACLE (# INDICATES CIRCUIT, TYPICAL) GFI TYPE
- DUPLEX RECEPTACLE
- FOURPLEX RECEPTACLE
- ISOLATED GROUND DUPLEX RECEPTACLE PROVIDE (1) #12 AWG. INSULATED, ISOLATED GROUND (IG) WIRE IN ADDITION TO EQUIPMENT GROUND WIRE
- SINGLE RECEPTACLE
- SPECIAL RECEPTACLE (TWIST-LOCK)
- WIREMOLD
- FLOOR MOUNTED DUPLEX RECEPTACLE
- FLOOR MOUNTED FOURPLEX RECEPTACLE
- J — JUNCTION BOX
- C — CLOCK RECEPTACLE (+84"A.F.F. UON)

COMMUNICATION

- TELEPHONE OUTLET
- TELEPHONE OUTLET (FLOOR MOUNTED)
- DATA OUTLET
- DATA OUTLET (FLOOR MOUNTED)
- COMBINATION OF TELE/DATA OUTLET (WALL MOUNTED)
- COMBINATION OF TELE/DATA OUTLET (FLOOR MOUNTED)
- S — SPEAKER (WALL MOUNTED)
- S — SPEAKER (CEILING MOUNTED)
- TV — TV OUTLET
- CCTV — CLOSED CIRCUIT TV CAMERA
- CR — CARD READER
- DOOR ACTUATOR

ELECTRICAL SYMBOLS (CONT'D)

- DRAWOUT TYPE MEDIUM VOLTAGE CIRCUIT BREAKER
- GFP — DRAWOUT TYPE LOW VOLTAGE CIRCUIT BREAKER W/ GFP- GROUND FAULT PROTECTION (OR AS NOTED)
- SF6 — SF6 CIRCUIT BREAKER
- GFCI, 100AT, 100AF — MOLDED CASE CIRCUIT BREAKER FRAME AND TRIP UNIT AS NOTED, 3-POLE UNLESS OTHERWISE NOTED.
  ST- SHUNT TRIP
  GFCI- GROUND FAULT CIRCUIT INTERRUPTER
  AF- FRAME AMPS
  AT- TRIP AMPS
- 600A, 200A — MANUAL INTERRUPTING SWITCH, 3POLE, 600A RATING AND 200A FUSE SIZE
- 400AT, 800AF, E, SS, LT, ST, GF, I — AIR CIRCUIT BREAKER, ELECTRICALLY OPERATED WITH SOLID STATE TRIP
  LT-LONG TIME
  ST-SHORT TIME
  GF-GROUND FAULT
  I-INSTANTANEOUS
- DRAWOUT DEVICE
- DEADBREAK JUNCTION
- THERMAL OVERLOAD
- MO, M — DISCONNECT SWITCH, MOTOR OPERATED
- CENTER, SIDE BREAK SWITCH
- 600A — HV SWITCH, FUSED, CUTOUT, ABOVE 600V, AMP RATING AS INDICATED
- TRANSFORMER
- POWER TRANSFORMER
  THREE WINDING
- 2 — POTENTIAL TRANSFORMER
  NUMBER INDICATES QUANTITY
- 1200/5 MR, 600 T, 3 — CURRENT TRANSFORMER, BUSHING TYPE, MULTI-RATIO (MR), PRIMARY/SECONDARY
  CURRENT RATED, NUMBER INDICATES QUANTITY, "T" INDOCATES TAP SETTING
- LIGHT SENSOR
- T — TRIP CIRCUIT
- A4 — KEY INTERLOCK UNIT. A4 - UNIT TAG.
- VACUUM INTERRUPTER
- VFD — VARIABLE FREQUENCY DRIVE
- 2500 — FEEDER NUMBER

ELECTRICAL SYMBOLS (CONT'D)

- 1200/5, 800/5, MR, T, 3 — CURRENT TRANSFORMER, PRIMARY/SECONDARY CURRENT INDICATED. NUMBER INDICATES QUANTITY MR-MULTI RATIO INDICATES MAXIMUM RATIO SETTING 'T'-TAP INDICATES REQUIRED TAP SETTINGS
- 50/5, 1 — CURRENT TRANSFORMER, ZERO SEQUENCE
- THREE PHASE, 3W, OPEN DELTA CONNECTION
- THREE PHASE, OPEN DELTA, GROUNDED AT COMMON POINT.
- GROUND CONNECTION
- 3, L.A. — LIGHTNING ARRESTOR NUMBER INDICATES QUANTITY
- SA — SURGE ARRESTOR
- EXISTING HV CABLE CONNECTION TERMINATION
- NEW HV CABLE CONNECTION TERMINATION
- SEPARABLE ELBOW CONNECTOR TERMINATION
- AM — ELECTRICAL DEVICE:
  AM-AMMETER
  AMR-AMMETER RECODER
  AS-AMMETER SWITCH
  EDM-ELECTRONIC DISPLAY METER
  MO-MOTOR OPERATED
  PF-POWER FACTOR
  ST-SHUNT TRIP
  WTD-WATT TRANSDUCER
  WHM-WATT HOUR METER
  VM-VOLT METER
  VS-VOLT METER SWITCH
- OR — PROTECTIVE RELAY (COIL)
- 50/51, 50N/51N, OR, 50, 51 — MICROPROCESSOR BASED ELECTRONIC DEVICE/RELAY. FOR ADDITIONAL DEVICE SEE ANSI C37.2
  50-INSTANTANEOUS OVERCURRENT RELAY
  50G-INSTANTANEOUS GROUND OVERCURRENT RELAY
  50GS-INSTANTANEOUS OVERCURRENT RELAY, ZERO SEQUENCE
  50N-INSTANTANEOUS NEUTRAL OVERCURRENT RELAY
  51-AC TIME OVERCURRENT RELAY
  51N-NEUTRAL TIME OVERCURRENT RELAY
  51G-GROUND TIME OVERCURRENT RELAY
  51GS ZERO SEQUENCE TIME OVERCURRRENT RELAY TIME UNIT 52-AC CIRCUIT BREAKER
  67-AC DIRECTIONAL OVERCURRENT RELAY
  32-DIRECTIONAL POWER RELAY
  86T-TRANSFORMER LOCK OUT RELAY
  86-LOCK OUT RELAY
  87-DIFFERENTIAL CURRRENT RELAY (WITH SUFFIX M,T,B,G FOR MOTOR, XFMR, BUS AND GENERATOR RESPECTIVELY)
- AFD — MICROPROCESSOR BASED ARC FLASH DETECTOR
- 60A — FUSE, RATING AS NOTED
- RES, 4800 — RESISTOR, OHMS AS INDICATED
- TS — TEST BLOCK OR TEST SWITCH
- BUS DUCT (RATING AS INDICATED ON DRAWING)
- I, OR, I — INTERLOCK
- K, OR, K — KEY INTERLOCK
- HP — MOTOR 3 PHASE, HORSE POWER AS INDICATED
- OR — CROSS WIRING (NOT CONNECTED)
- CROSS WIRING CONNECTION
- RESIDUAL CONNECTION
- CONNECTION FOR RESIDUAL GROUND RELAY
- NORMALLY OPEN CONTACT
- NORMALLY CLOSED CONTACT
- T — TRIPPING INFLUENCE LINE

ELECTRICAL SYMBOLS (CONT'D)

- DELTA CONNECTION
- "Y" OR STAR CONNECTION WITH GROUNDED NEUTRAL
- G — GREEN INDICATING LIGHT
- R — RED INDICATING LIGHT
- W — WHITE INDICATING LIGHT
- OR — EXISTING CABLE SPLICE
- CABLE TERMINATION/SPLICE POINT
- OR — NEW CABLE SPLICE
- TERMINAL BLOCK
- TERMINAL POINTS
- PANEL
- WELDING RECEPTACLE
- 600A — LOAD BREAK SWITCH, 600A RATED
- S/S — UPS STATIC SWITCH
- UPS CHARGER
- UPS INVERTER
- UPS BATTERY UNIT
- GFP — GROUND FAULT PROTECTION
- ST — SHUNT TRIP
- 1 — MOTOR CONTROLLER OR STARTER
  1- DENOTES STARTER NEMA SIZE
- DISCONNECT SWITCH
- PB — PULL BOX
- MH E60 — MANHOLE (EXISTING)
  "E60" INDICATES MH #
- NEW DUCT BANK
- EXISTING DUCT BANK
  ○ - INDICATES EMPTY CONDUIT
  ⊗ - INDICATES CONDUIT IN USE.

ZONE	LETTER	DESCRIPTION	DRAWN	DATE	APPRVD

REVISIONS

DRAWN H. FORTEZA	DATE	
DESIGNED H. FORTEZA	DATE	
CHECKED J.McCUSKER	DATE	
A&E PM G.HITE	DATE	
NASA PM W.LEE	DATE	
REQUESTER G.RAICHE	DATE	
R&QA -	DATE	
SAFETY/PSM	DATE	
SUPERVISOR S.FRANKEL	DATE	

REGISTERED PROFESSIONAL ENGINEER FREDERICK M. JONES No. E14616 ELECTRICAL STATE OF CALIFORNIA

Ames Research Center
Moffett Field, California

REPLACE ARC JET COMPLEX SVS BOILER
ELECTRICAL

ELECTRICAL SYMBOLS

SIZE	CAGE CODE		REV
D	25307	A 231-1300-E002	
SCALE AS NOTED		INDEX	SHEET OF

FILE NAME: 231-E002.DWG 12/12/12

DWG: R:\23AN\60212932.0001 (K11027) Replace ArcJect Complex SVS Boiler Final Design\500 CAD\ES\Sheet\231-E002.dwg Version: 17.1s (LMS Tech) User: wbonaldi
DATE: Jan 28, 2013 - 1:46:59 pm

DWG NO. A231-1300-E003 | SH. | REV

ELECTRICAL ABBREVIATIONS

A	AMPERE
AA	ALL ALUMINUM
AA/FA	AIR AIR/FORCED AIR
ACB	AIR CIRCUIT BREAKER
A/C	AIR CONDITIONING
AC	ALTERNATING CURRENT
ADS	AIR DISCONNECT SWITCH
AF	AMPERE FRAME OR FUSE SETTING
AFD	ARC FLASH DETECTOR
AFF	ABOVE FINISHED FLOOR
AFG	ABOVE FINISHED GRADE
AHU	AIR HANDLING UNIT
Al	ALUMINUM
AM	AMMETER
A, AMP	AMPERE
AMR	AMMETER RECORDER
ANN	ANNUNCIATOR
AO	ANALOG OUTPUT
APMS	AMES POWER MONITORING SYSTEM
APPROX	APPROXIMATELY
ARF	ABOVE RAISED FLOOR
AS	AMMETER SWITCH
ASTM	AMERICAN SOCIETY FOR TESTING AND MATERIALS
ASW	AIR SWITCH AT AMPERE TRIP OR FUSE SETTING
ATS	AUTOMATIC TRANSFER SWITCH
AUX	AUXILIARY
AWG	AMERICAN WIRE GAUGE
B	BELL
BATT	BATTERY
BCS	BREAKER CONTROL SWITCH
BCW	BARE COPPER WIRE
BIL	BASIC INSULATION LEVEL
BLDG	BUILDING
BKR	BREAKER
BOC	BOTTOM OF CONDUIT
BOD	BOTTOM OF DUCT
BOT	BOTTOM OF TRAY
BPSP	BY-PASS SWITCH PANEL
BRN	BUS REFERENCE NUMBER
C	CONDUIT
CAB	CABINET
CAP	CAPACITOR
CB	CIRCUIT BREAKER
CBC	CALIFORNIA BUILDING CODE
CB'S	CIRCUIT BREAKERS
CCTV	CLOSED-CIRCUIT TELEVISION
CEC	CALIFORNIA ELECTRICAL CODE
CES	CABLE ENTRY SIDE
CIR, CKT	CIRCUIT
CLF	CURRENT LIMITING FUSE
CLG	CEILING
CLP	CURRENT LIMITING PROTECTOR
CLR	CLEAR
CMD	CIRCUIT MONITOR DEVICE
CPMT	COMPARTMENT
CNTL	CONTROL
CO	CONDUIT ONLY
COL	COLUMN
CONC	CONCRETE
CONT'D	CONTINUED
CONT'N	CONTINUATION
CPT	CONTROL POWER TRANSFORMER
CRS	COATED RIGID STEEL
CS	CONTROL SWITCH
CT	CURRENT TRANSFORMER
CTB	CONTROL TEST BLOCK
CTD	CAPACITOR TRIP DEVICE
CTF	CONTROLS TRANSFORMER
Cu	COPPER
CUB	CUBICLE
DB	DUCT BANK
DC	DIRECT CURRENT
DE	DEAD END
DEMO	DEMOLITION
DET	DETAIL
DEV	DEVICE
DI	DIGITAL INPUT
DIA	DIAMETER
DISC	DISCONNECT
DIST, DISTRIB	DISTRIBUTION
DIV	DIVISION
DN	DOWN
DO	DRAW-OUT TYPE, DIGITAL OUTPUT
DS	DISCONNECT SWITCH
DSD	DUCT SMOKE DETECTOR
DWG	DRAWING
E	ELECTRICALLY OPERATED CIRCUIT BREAKER

ELECTRICAL ABBREVIATIONS (CONT'D)

EA	EACH
(E), EXIST	EXISTING
EDM	ELECTRONIC DISPLAY METER
EF	EXHAUST FAN
EG	ENGINE GENERATOR
ELEC	ELECTRIC(AL)
ELEV	ELEVATION
EMT	ELECTRICAL METALLIC TUBING
ENT	ELECTRICAL NONMETALLIC TUBING
E.O.L.	END OF LINE
EPO	EMERGENCY POWER OFF
EPOCP	EMERGENCY POWER OFF CONTROL PANEL
EPOCS	EMERGENCY POWER OFF CONTROL SYSTEM
EPO/ST-TP1	EMERGENCY POWER/SHUNT TRIP-TERMINAL PANEL 1
EPR	ETHYLENE PROPYLENE RUBBER
EQ	EQUAL
(ER)	EXISTING RELOCATED
EQUIP	EQUIPMENT
ETLP	EMERGENCY TIE LINE PANEL
ETM	ELAPSED TIME METER
EXH	EXHAUST
FA	FIRE ALARM
FACP	FIRE ALARM CONROL PANEL
FBO	FURNISHED BY OTHER
FCU	FAN COIL UNIT
FDR	FEEDER
FIN	FINISH
FIXT	FIXTURE
FLA	FULL LOAD AMPERES
FLR	FLOOR
FLEX	FLEXIBLE
FMCS	FACILITIES MONITORING & CONTROL SYSTEM
FOS	FRONT OF SWITCH
FU	FUSE
F, FUT	FUTURE
FVNR	FULL VOLTAGE NONREVERSING
FVR	FULL VOLTAGE REVERSING
G, GND, GRD	GROUND(ED)
GA	GAUGE
GEC	GROUND ELECTRODE CONDUCTOR
GEN	GENERATOR
GF	GROUND FAULT
GFCI	GROUND FAULT CIRCUIT INTERRUPTER
GFE	GOVERNMENT FURNISHED EQUIPMENT
GFI	GROUND FAULT INTERRUPTER
GFP	GROUND FAULT PROTECTION
GS	GROUND SENSOR
HAZMAT	HAZARDOUS MATERIAL
H1, H2	MV TERMINALS
HOA	HAND OFF AUTO
HP	HORSE POWER
HR	HOUR
HTR	HEATER
HSE	HOUSE
HV	HIGH VOLTAGE
HVAC	HEATING, VENTILATING & AIR CONDITIONING
HZ	HERTZ
IC	INTERRUPTING CURRENT
INSTRT	INSTRUMENT
IPS	INTERNATIONAL PIPE STANDARD
ISC	SHORT CIRCUIT CURRENT
JB	JUNCTION BOX
KA	KILO AMPERE
KAIC	KILO AMPERE INTERRUPTING RATING
kCMIL	KILO CIRCULAR MILS
kV	KILOVOLT
kVA	KILOVOLT AMPERE
KVARH	KILO VAR-HOUR
kW	KILOWATT
kWH	KILO WATT-HOUR
LA	LIGHTNING ARRESTOR
LAB	LABORATORY
LAN	LOCAL AREA NETWORK
LB	POUND
LC	LIGHTING CONTACTOR
L/C	LOCK CLOSED (INTERLOCK)
L/O	LOCK OPEN (INTERLOCK)
LFMC	LIQUID-TIGHT FLEXIBLE METAL CONDUIT
LTC	LOAD TAP CHANGER
LT(G)	LIGHT(ING)
LHS	LEFT HAND SIDE
LTSW	LIGHT SWITCH
LV	LOW VOLTAGE
M	METER
mA	MILLI AMPERES
MBER	MICROPROCESSOR BASED ELECTRONIC RELAY

ELECTRICAL ABBREVIATIONS (CONT'D)

MBG	MAIN BUILDING GROUND
MCB	MAIN CIRCUIT BREAKER
MCC	MOTOR CONTROL CENTER
MCCB	MOLDED CASE CIRCUIT BREAKER
MCG	MAIN COMPUTER GROUND
MCM	THOUSAND CIRCULAR MILS
MCP	MOTOR CIRCUIT PROTECTOR
MGDS	MOBILE GENERATOR DISCONNECT SWITCH
MFR	MANUFACTURER
MH	MANHOLE
MI	MECHANICAL INTERLOCK
MIN	MINIMUM
MLO	MAIN LUGS ONLY
mm	MILLIMETERS
MO	MOTOR OPERATED
MOB.	MOBILE
MPH	MILES PER HOUR
MR	MULTI RATIO
MRCT	MULTI-RATIO, CURRENT TRANSFORMER
MS	MOTOR STARTER
MTD	MOUNTED
MTG	MOUNTING
MV	MEDIUM VOLTAGE
MVA	MEGA VOLT-AMPERE
NASA	NATIONAL AERONAUTICS AND SPACE ADMINISTRATION
N, NEUT	NEUTRAL
N/A	NOT APPLICABLE
(N)	NEW
N.C.	NORMALLY CLOSED
NEC	NATIONAL ELECTRICAL CODE
NEIS	NATIONAL ELECTRICAL INSTALLATION STANDARD
NEMA	NATIONAL ELECTRICAL MANUFACTURER'S ASSOCIATION
NESC	NATIONAL ELECTRICAL SAFETY CODE
NFD	NON FUSED DISCONNECT SWITCH
NIC	NOT IN CONTRACT
N0.	NUMBER
N.O.	NORMALLY OPEN
NTS	NOT TO SCALE
OC	ON CENTER
OA/FA, FFA	OIL AIR/FORCED AIR, FUTURE FORCED AIR
OCB	OIL CIRCUIT BREAKER
O/H	OVERHEAD
OL	OVERLOAD
OLTC	ON LOAD TAP CHANGER
OSHA	OCCUPATIONAL SAFETY & HEALTH ADMINISTRATION
OSW	OIL CUTOUT SWITCH
P	POLE
PB	PULLBOX
PBS	PUSH BUTTON STATION
PCB	POLYCHLORINATED BIPHENYL
PF	POWER FACTOR
PG&E	PACIFIC GAS AND ELECTRIC
PILC	PAPER INSULATED LEAD COVERED
PH, Ø,	PHASE
PM	PRIMARY
PMD	POWER MONITOR DISPLAY
PNL	PANEL
POC	POINT OF CONNECTION
PPD	POWER PICK-UP DEVICE FOR METERING
PR	PAIR
PRI	PRIMARY
PSF	POUNDS PER SQUARE FOOT
PSI	POUNDS PER SQUARE INCH
PT	POTENTIAL TRANSFORMER
PVC	POLYVINYL CHLORIDE
PWR	POWER
Q	QUANTITY
R	RED
(R)	RELOCATED
REC	RECORDING
RECPT, RCP	RECEPTACLE
REF	REFERENCE
REQ	REQUIRED
RES	RESISTOR
RGC	RIGID GALVANIZED CONDUIT
RGS	RIGID GALVANIZED STEEL
RHS	RIGHT HAND SIDE
RLY	RELAY
RM	ROOM
RMS	ROOT MEAN SQUARE
PTB	POTENTIAL TEST BLOCK
RSC	RIGID STEEL CONDUIT
SA	SURGE ARRESTOR
SC	SHORT CIRCUIT
SCH	SCHEDULE
SERV	SERVICE

ELECTRICAL ABBREVIATIONS (CONT'D)

SEC	SECOND, SECONDARY
SCTB	SHORT CIRCUITING TERMINAL BLOCK
SF	SUPPLY FAN
SF6	SULFUR-HEXAFLUORIDE
SH, SHT	SHEET
SIM	SIMILAR
SMACNA	SHEET METAL AND AIRCONDITIONING CONTRACTORS NATIONAL ASSOCIATION
SP	SPARE
SPEC	SPECIFICATION(S)
SPKR	SPEAKER
SQ	SQUARE
SS	STAINLESS STEEL
ST	SHUNT TRIP
STA	STATION
STD	STANDARD
SWBD	SWITCHBOARD
SWGR	SWITCHGEAR
SW	SWITCH
SYM	SYMMETRICAL, SYMBOL
SYS, SYST	SYSTEM
T	TERMINAL
T, XFMR,	TRANSFORMER
TB	TERMINAL BLOCK
TBD	TO BE DETERMINED OR DEVELOPED
TBL	TEST BLOCK
TDR	TIME DELAY RELAY
TEL	TELEPHONE
TEMP	TEMPERATURE
TJB	TERMINAL JUNCTION BOX
TP	TWISTED PAIR
TPS	TWISTED PAIR, SHIELDED CABLE
TS	TEST SWITCH
TWR	TOWER
TYP, (TYP)	TYPICAL
U/G	UNDERGROUND
U.O.N.	UNLESS OTHERWISE NOTED
UPS	UNINTERRUPTIBLE POWER SUPPLY
UV	ULTRA VIOLET
V	VOLT(S)
VA	VOLTAMPERE
VCB	VACUUM CIRCUIT BREAKER
VCL	VARNISHED CAMBRIC LEAD
VDC	VOLTS DIRECT CURRENT
VFD	VARIABLE FREQUENCY DRIVE
VM	VOLTMETER
VS	VOLTMETER SWITCH
VT	VOLTAGE TRANSFORMER
VTD	VOLTAGE TRANSDUCER
W	WATT, WIRE, WHITE
W/	WITH
WH	WATT HOUR
WHD	WATT HOUR DEMAND METER
WHM	WATT HOUR METER
WP	WEATHERPROOF
W/O	WITHOUT
WTD	WATT TRANSDUCER
W.T.	WIND TUNNEL
XLPE	CROSS-LINKED POLYETHYLENE
XFMR	TRANSFORMER
X1...X4	LV TERMINALS
Y	WYE CONNECTED
Z	IMPEDANCE
ZSRG	ZERO SIGNAL REFERENCE GROUND

REGISTERED PROFESSIONAL ENGINEER FREDERICK M. JONES No. E14616 ELECTRICAL STATE OF CALIFORNIA

ZONE	LETTER	DESCRIPTION	DRAWN	DATE	APPRVD

REVISIONS

DRAWN H. FORTEZA	DATE
DESIGNED H. FORTEZA	DATE
CHECKED J.McCUSKER	DATE
A&E PM G.HITE	DATE
NASA PM W.LEE	DATE
REQUESTER G.RAICHE	DATE
R&QA -	DATE
SAFETY/PSM	DATE
SUPERVISOR S.FRANKEL	DATE

Ames Research Center
Moffett Field, California

REPLACE ARC JET COMPLEX SVS BOILER
ELECTRICAL

ELECTRICAL ABBREVIATIONS

SIZE	CAGE CODE	
D	25307	A 231-1300-E003 REV
SCALE AS NOTED	INDEX	SHEET OF

FILE NAME: 231-E003.DWG 12/12/12

DWG: R:\23AA60212932-0001 (K11027) Replace ArcJect Complex SVS Boiler Final Design\500 CAD\E\Sheet\231-E003.dwg Version: 17.1s (LMS Tech) User: wbonaldi
DATE: Jan 28, 2013 - 1:47:24 pm

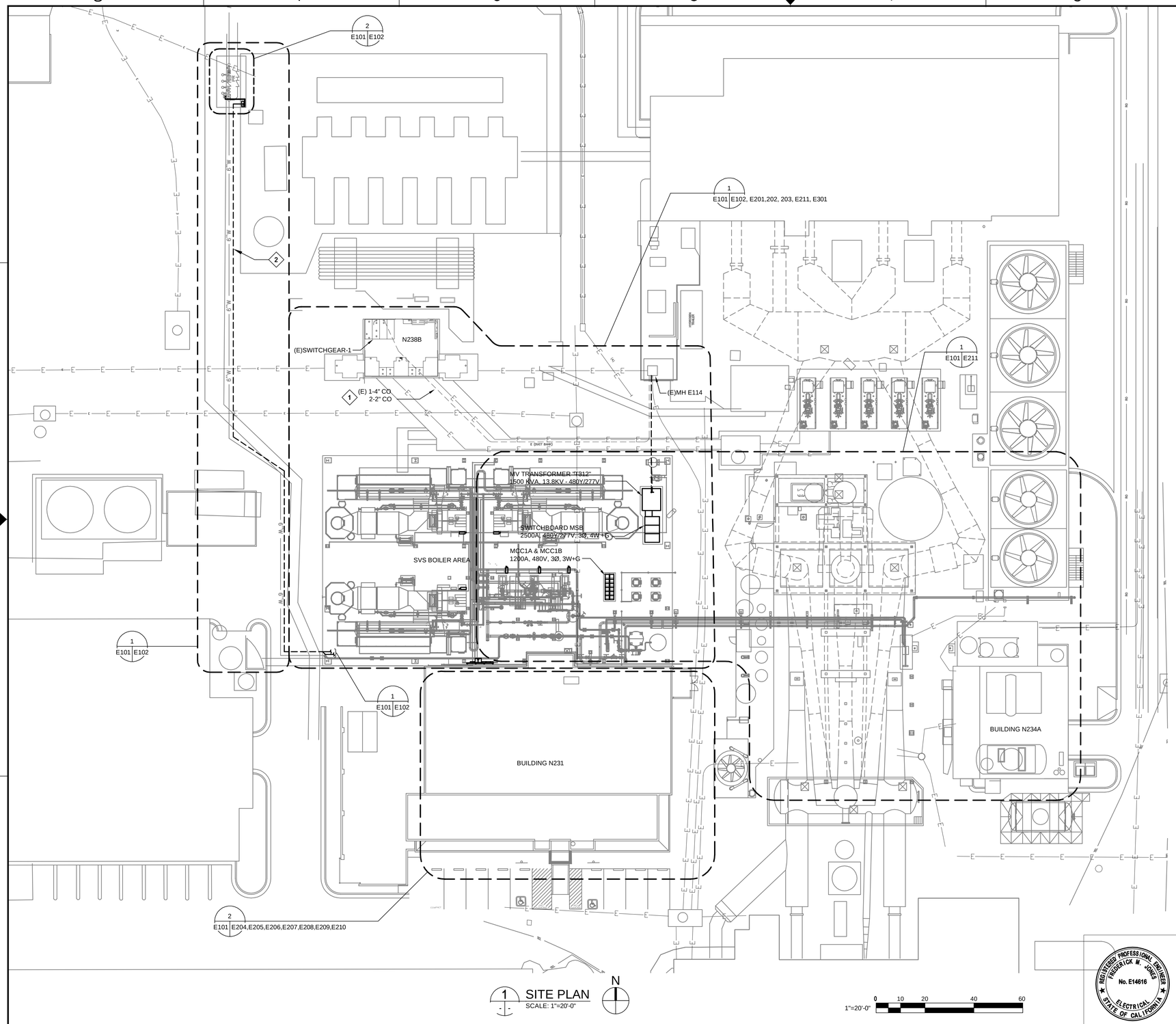

1 SITE PLAN
SCALE: 1"=20'-0"

1"=20'-0" 0 10 20 40 60

REGISTERED PROFESSIONAL ENGINEER FREDERICK M. JONES No. E14616 ELECTRICAL STATE OF CALIFORNIA

SHEET NOTES

KEY NOTES

1. EXISTING 1-4" AND 2-2" CONDUITS ONLY WITH PULL STRINGS FROM (E) SWITCHGEAR-1 TO MH E114.
2. PROVIDE 2-2" PVC SCHEDULE 40 CONDUITS IN CONCRETE ENCASED DUCT BANK BETWEEN BOILER PLANT BUILDING AND 3-WAY WATER VALVE LOCATION AS SHOWN. DUCT BANK SHALL RUN ALONG 6" WATER PIPE IN A COMMON TRENCH WITH A MINIMUM CLEARANCE OF 12". SEE DRAWING E702 DETAIL 7 FOR DETAILS.

ZONE	LETTER	DESCRIPTION	DRAWN	DATE	APPRVD

REVISIONS

DRAWN H. FORTEZA	DATE
DESIGNED H. FORTEZA	DATE
CHECKED J.McCUSKER	DATE
A&E PM G.HITE	DATE
NASA PM W.LEE	DATE
REQUESTER G.RAICHE	DATE
R&QA	DATE
SAFETY/PSM	DATE
SUPERVISOR S.FRANKEL	DATE

Ames Research Center
Moffett Field, California

REPLACE ARC JET COMPLEX SVS BOILER
ELECTRICAL

SITE PLAN

SIZE	CAGE CODE	REV
D	25307	A
SCALE 1"=20'-0"	INDEX	SHEET OF

231-1300-E101

FILE NAME: 231-E101.DWG 12/12/12

DWG: P:\234A\60212932.0001 (K11027) Replace ArcJect Complex SVS Boiler Final Design\500 CAD\ES\Sheet\231-E101.dwg Version: 17.1s (LMS Tech) User: wbonaldi
DATE: Jan 28, 2013 - 1:48:11 pm

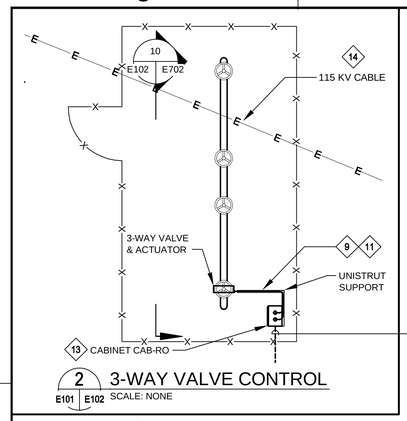

2 3-WAY VALVE CONTROL
E101 E102 SCALE: NONE

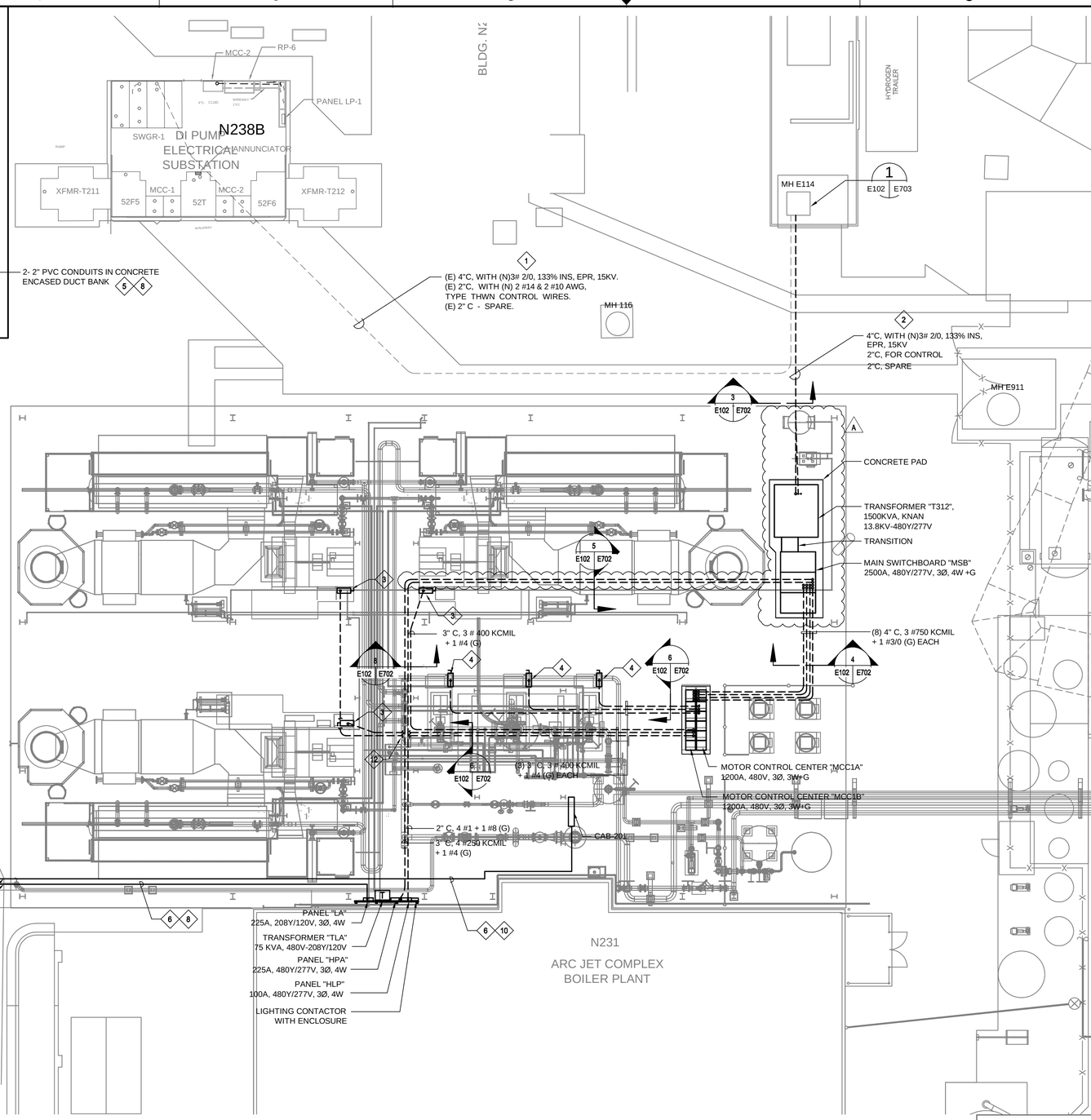

1 UNDERGROUND DUCT BANK ROUTING PLAN
E101 E102 SCALE: 1"=10'-0"

N

1"=10'-0" 0 5 10 20 30

SHEET NOTES

1. THE CONTRACTOR SHALL COORDINATE UNDERGROUND ELECTRICAL DUCT BANK ROUTING WITH UNDERGROUND PLUMBING, AS SHOWN ON DWG M103, AND WITH (E) UNDERGROUND ELECTRICAL DUCT BANKS, AS SHOWN ON DWG C106.

KEY NOTES

1. PROVIDE WIRES FROM (E) SWITCHGEAR -1 TO NEW TRANSFORMER VIA MH E114 AS SHOWN.
2. PROVIDE (1) 4" PVC CONDUIT WITH 3 #2/0, EPR, 133% INS. 15KV CABLE AND (1) 2" PVC CONDUIT WITH 2 #14 AND 2 #10 AWG, TYPE THWN CONTROL WIRES AND (1) 2" PVC, SPARE IN CONCRETE ENCASED DUCT BANK FROM MH E114 TO NEW TRANSFORMER.
3. PROVIDE 400A, NON-FUSED, 3-POLE, 480V, HEAVY DUTY DISCONNECT SWITCH IN NEMA 3R ENLCLOSURE, SQUARE D OR APPROVED EQUAL FOR FORCED DRAFT FAN. PROVIDE ALL NECESSARY CONNECTIONS PER MANUFACTURER'S RECOMMENDATION.
4. PROVIDE 400A, NON-FUSED, 3-POLE, 480V, HEAVY DUTY DISCONNECT SWITCH IN NEMA 3R ENLCLOSURE, SQUARE D OR APPROVED EQUAL FOR BOILER FEEDWATER PUMP. PROVIDE ALL NECESSARY CONNECTIONS PER MANUFACTURER'S RECOMMENDATION. SEE E502.
5. PROVIDE 2- 2" PVC SCHEDULE 40 CONDUITS IN CONCRETE ENCASED DUCT BANK BETWEEN BOILER PLANT AND 3-WAY VALVE LOCATION AS SHOWN. CONDUIT BEND RADIUS SHALL NOT BE LESS THAN 12". ONE CONDUIT TO BE USED FOR POWER WIRES, ANOTHER CONDUIT FOR FIBER OPTIC CABLE.
6. PROVIDE 2" RIGID STEEL PVC COATED CONDUIT. MOUNT CONDUIT ON UNISTRUT SUPPORTS.
7. PROVIDE PVC-TO-RIGID STEEL CONDUIT UL LISTED 2" FEMALE ADAPTERS TO CONNECT UNDERGROUND AND ABOVE GROUND CONDUITS.
8. PROVIDE 2#12 AWG AND 1#12 AWG GND THWN WIRES. TERMINATE ONE END ON SPARE CIRCUIT #20 IN PANEL "LA", CONNECT OTHER END TO TERMINAL BLOCK IN CONTROL CABINET CAB-RO.
9. PROVIDE 2#12 AWG AND 1#12 AWG GND THWN WIRES FROM CAB-RO TO 3-WAY VALVE ACTUATOR TERMINAL BOX IN 1" LIQUID TIGHT FLEXIBLE CONDUIT. FASTEN CONDUIT TO THE UNISTRUT SUPPORT. SEE DETAIL 2 ON THIS DRAWING.
10. FIBER OPTIC CABLE WILL BE INSTALLED BY OTHERS.
11. PROVIDE 1" LIQUID TIGHT CONDUIT FROM CAB-RO TO 3-WAY VALVE TERMINATION BOX FOR CAT 5E CABLE. FASTEN CONDUIT TO THE UNISTRUT SUPPORT. SEE DETAIL 2 ON THIS DRAWING.
12. AT CROSSOVER OF DUCT BANKS, MAINTAIN AT LEAST 3" VERTICAL SEPARATION BETWEEN CROSSING DUCTS.
13. PROVIDE SINGLE PHASE, 120 V UNINTERRUPTED POWER SUPPLY (UPS) FOR 3-WAY VALVE SOLENOID BACK-UP IN CASE OF POWER OUTAGE. MOUNT UPS INSIDE CONTROL CABINET CAB-RO.
14. CONTRACTOR SHALL IDENTIFY EXACT LOCATION OF THE EXISTING 115KV HIGH VOLTAGE UNDERGROUND DUCT BANK. THE 3-WAY VALVE EQUIPMENT PAD SHALL BE PLACED IN SUCH A WAY THAT AVOIDS INTERSECTION OF THE 115 KV CABLE AND THE UNDERGROUND PORTION OF THE 6" RO LINE.

ZONE	LETTER	DESCRIPTION	DRAWN	DATE	APPRVD
	A	BULK AMMONIA TANK SYSTEM	FB	12/12/12	JM

REVISIONS

DRAWN H. FORTEZA	DATE	
DESIGNED H. FORTEZA	DATE	
CHECKED J.McCUSKER	DATE	
A&E PM G.HITE	DATE	
NASA PM W.LEE	DATE	
REQUESTER G.RAICHE	DATE	
R&QA	DATE	
SAFETY/PSM	DATE	
SUPERVISOR S.FRANKEL	DATE	

Ames Research Center
Moffett Field, California

REPLACE ARC JET COMPLEX SVS BOILER
ELECTRICAL
UNDERGROUND DUCT BANK ROUTING PLAN

SIZE	CAGE CODE		REV
D	25307	A 231-1300-E102	
SCALE 1"=10'-0"		INDEX	SHEET OF

FILE NAME: 231-E102.DWG 12/12/12

REGISTERED PROFESSIONAL ENGINEER FREDERICK M. JONES No. E14616 ELECTRICAL STATE OF CALIFORNIA

DWG: R:\234A\60212932.0001 (K11027) Replace ArcJect Complex SVS Boiler Final Design\500 CAD\ES\Sheet\231-E102.dwg Version: 17.1s (LMS Tech) User: wbonaldi
DATE: Jan 28, 2013 - 1:46:41 pm

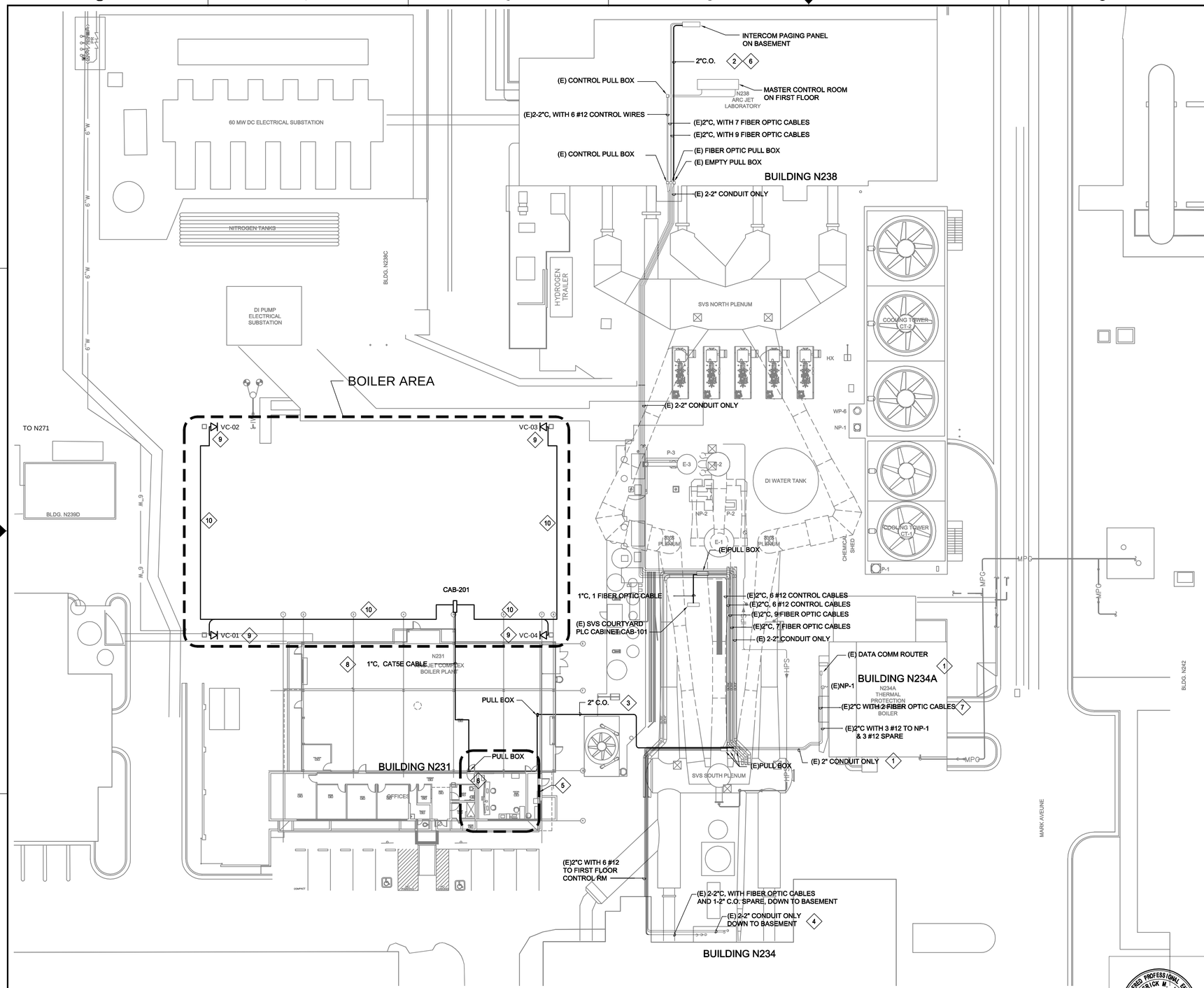

1 OVERHEAD CONDUITS FOR COMMUNICATION AND CONTROL ROUTING PLAN

SCALE: 1" = 20"-0"

DWG NO.	SH.	REV
A231-1300-E103		

SHEET NOTES

1. THE CONDUIT ROUTING ARE PROVIDED FOR GUIDANCE ONLY. THE CONTRACTOR SHALL FIELD VERIFY ALL EXISTING EQUIPMENT INCLUDING TERMINAL BLOCKS, TERMINAL IDENTIFICATION NUMBER, CONNECTIONS, ETC., AND REVISE DRAWING AS NEEDED TO MATCH EXISTING AND NEW EQUIPMENT TO PROVIDE A COMPLETE FUNCTIONAL SYSTEM.

.

KEY NOTES

1. EXISTING CONTROL WIRES AND FIBER OPTIC CABLES FOR COMMUNICATION AND DATA FROM BLDG N234A WILL REMAIN.
2. PROVIDE 2" EMT CONDUIT FROM (E) EMPTY PULL BOX AND ROUTE TO EXISTING INTERCOM PAGING PANEL LOCATED AT BASEMENT ON BLDG N238. REFER TO J602 I & C CONTROL BLOCK DIAGRAM DRAWING FOR ADDITIONAL INFORMATION.
3. PROVIDE 2" RGS PVC-COATED CONDUIT FROM (E) PULL BOX TO NEW PULL BOX IN CONTROL ROOM IN BLDG N231 FOR INTERCOM CONNECTION AS SHOWN. REFER TO J602 I & C CONTROL BLOCK DIAGRAM DRAWING FOR ADDITIONAL INFORMATION.
4. EXTEND (E) "CONDUIT ONLY" WITH 2" EMT CONDUIT AND ROUTE TO CONTROL ROOM IN BLDG N234 FOR CONNECTION TO INTERCOM. REFER TO J602 I&C CONTROL BLOCK DIAGRAM DRAWING FOR ADDITIONAL INFORMATION.
5. BUILDING N231 CONTROL ROOM LOCATION.
6. WIRING AND FINAL CONNECTION FOR TELE/DATA AND INTERCOM WILL BE DONE BY NASA AMES COMMUNICATION GROUP.
7. FIBER OPTIC CABLES FROM N231 CONTROL ROOM TO ROOM NORTH OF N234A CONTROL ROOM TO ALLOW CONTROL OF NEW BOILERS. REFER TO CABLES C-17 AND C20 ON J602 INSTRUMENTATION & CONTROL CONTROL SYSTEM BLOCK DIAGRAM.
8. PROVIDE 1" EMT CONDUIT WITH CAT5E CABLE FROM CAB-201 TO NEW PULL BOX IN N231 CONTROL ROOM. CONNECTION TO NASA ETHERNET BY OTHERS. MOUNT CONDUIT ON UNISTRUT SUPPORTS.
9. PROVIDE RJ-45 DATA OUTLETS. MOUNT OUTLETS ON THE CANOPY SUPPORT COLUMNS. MOUNTING HEIGHT TO BE DETERMINED AT TIME OF INSTALLATION.
10. PROVIDE 1" RGS PVC-COATED CONDUITS FOR CAT5e CABLES FOR VIDEO MONITORING CAMERAS (VC). RUN CONDUITS FROM CAB-201 TO DATA OUTLETS AT VC LOCATIONS ON THE CANOPY SUPPORT COLUMNS. REFER TO J602 I&C CONTROL BLOCK DIAGRAM DRAWING FOR ADDITIONAL INFORMATION.

ZONE	LETTER	DESCRIPTION	DRAWN	DATE	APPRVD

REVISIONS

DRAWN H. FORTEZA	DATE	
DESIGNED H. FORTEZA	DATE	
CHECKED J.McCUSKER	DATE	
A&E PM G.HITE	DATE	
NASA PM W.LEE	DATE	
REQUESTER G.RAICHE	DATE	
R&QA	DATE	
SAFETY/PSM	DATE	
SUPERVISOR S.FRANKEL	DATE	

Ames Research Center
Moffett Field, California

REPLACE ARC JET COMPLEX SVS BOILER
ELECTRICAL

OVERHEAD CONDUITS FOR COMMUNICATION AND CONTROL ROUTING PLAN

SIZE	CAGE CODE	REV
D	25307	A 231-1300-E103
SCALE 1" = 20"-0"	INDEX	SHEET OF

FILE NAME: 231-E103.DWG 12/12/12

REGISTERED PROFESSIONAL ENGINEER REDERICK M. JONES No. E14616 ELECTRICAL STATE OF CALIFORNIA

DWG: R:\234A\60212932.0001 (K11027) Replace ArcJect Complex SVS Boiler Final Design\500 CAD\ElS\Sheet\231-E103.dwg Version: 17.1s (LMS Tech) User: wbonaldi
DATE: Jan 28, 2013 - 1:47:16 pm

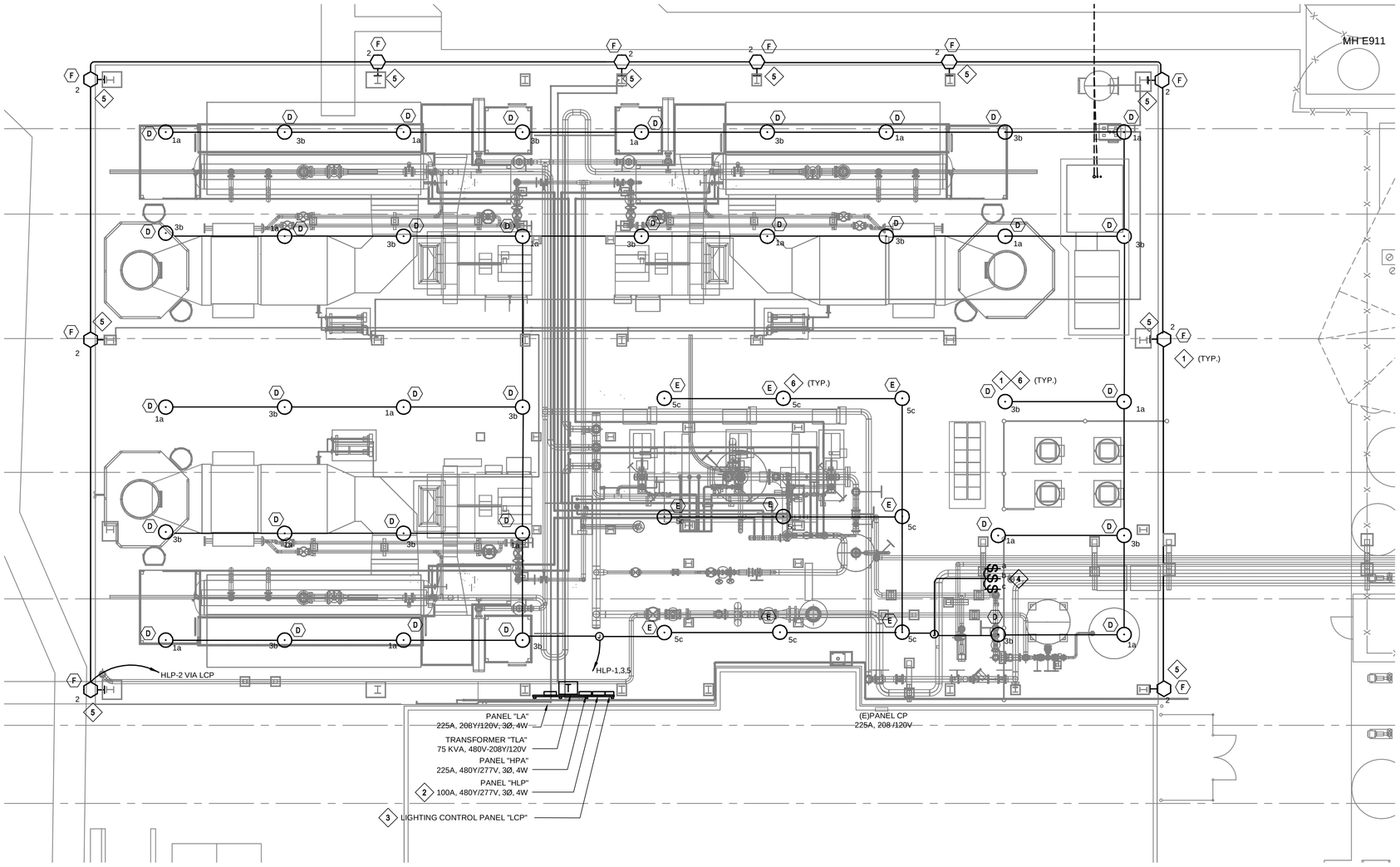

1 BOILER AREA CANOPY & PERIMETER LIGHTING
E101 E201 SCALE: 1/8"=1'-0"

N

SHEET NOTES

KEY NOTES

1. PROVIDE LIGHTING FIXTURES AS SHOWN. REFER TO LIGHTING FIXTURE SCHEDULE ON SHEET E601 FOR FIXTURE TYPES AND MOUNTING HEIGHTS.
2. ALL LIGHTING FIXTURES SHALL BE FED FROM PANEL HLP.
3. PROVIDE LIGHTING CONTROL PANEL, LCP, FOR PERIMETER LIGHTING. REFER TO DRAWING E702, DETAIL #2 FOR MODEL NUMBER AND CONTROLS DETAILS.
4. SWITCHES FOR CANOPY LIGHTS.
5. PERIMETER LIGHTS SHALL BE MOUNTED 14 FEET A.F.F. FOR CONTROLS, SEE KEYNOTE 3.
6. MOUNT LIGHTING FIXTURES ON STRUCTURAL BEAMS WITH CABLE HANGERS AND CLAMPS PER MANUFACTURER'S RECOMMENDATIONS. FOR EXACT LOCATIONS OF LIGHTING FIXTURES, SEE DWG A106.

ZONE	LETTER	DESCRIPTION	DRAWN	DATE	APPRVD

REVISIONS

DRAWN H. FORTEZA	DATE
DESIGNED H. FORTEZA	DATE
CHECKED J.McCUSKER	DATE
A&E PM G.HITE	DATE
NASA PM W.LEE	DATE
REQUESTER G.RAICHE	DATE
R&QA	DATE
SAFETY/PSM	DATE
SUPERVISOR S.FRANKEL	DATE

REGISTERED PROFESSIONAL ENGINEER FREDERICK M. JONES No. E14616 ELECTRICAL STATE OF CALIFORNIA

Ames Research Center
Moffett Field, California

REPLACE ARC JET COMPLEX SVS BOILER
ELECTRICAL

BOILER AREA CANOPY & PERIMETER LIGHTING

SIZE	CAGE CODE		REV
D	25307	A 231-1300-E201	
SCALE 1/8"=1'-0"		INDEX	SHEET OF

FILE NAME: 231-E201.DWG 12/12/12

1/8"=1' 0 4 8 16 24

DWG: R:\234A\60212932.0001 (K11027) Replace ArcJect Complex SVS Boiler Final Design\500 CAD\E\Sheet\231-E201.dwg Version: 17.1s (LMS Tech) User: wdonaldi
DATE: Jan 28, 2013 - 11:7:49 pm

DWG NO.	SH.	REV
A231-1300-E202		

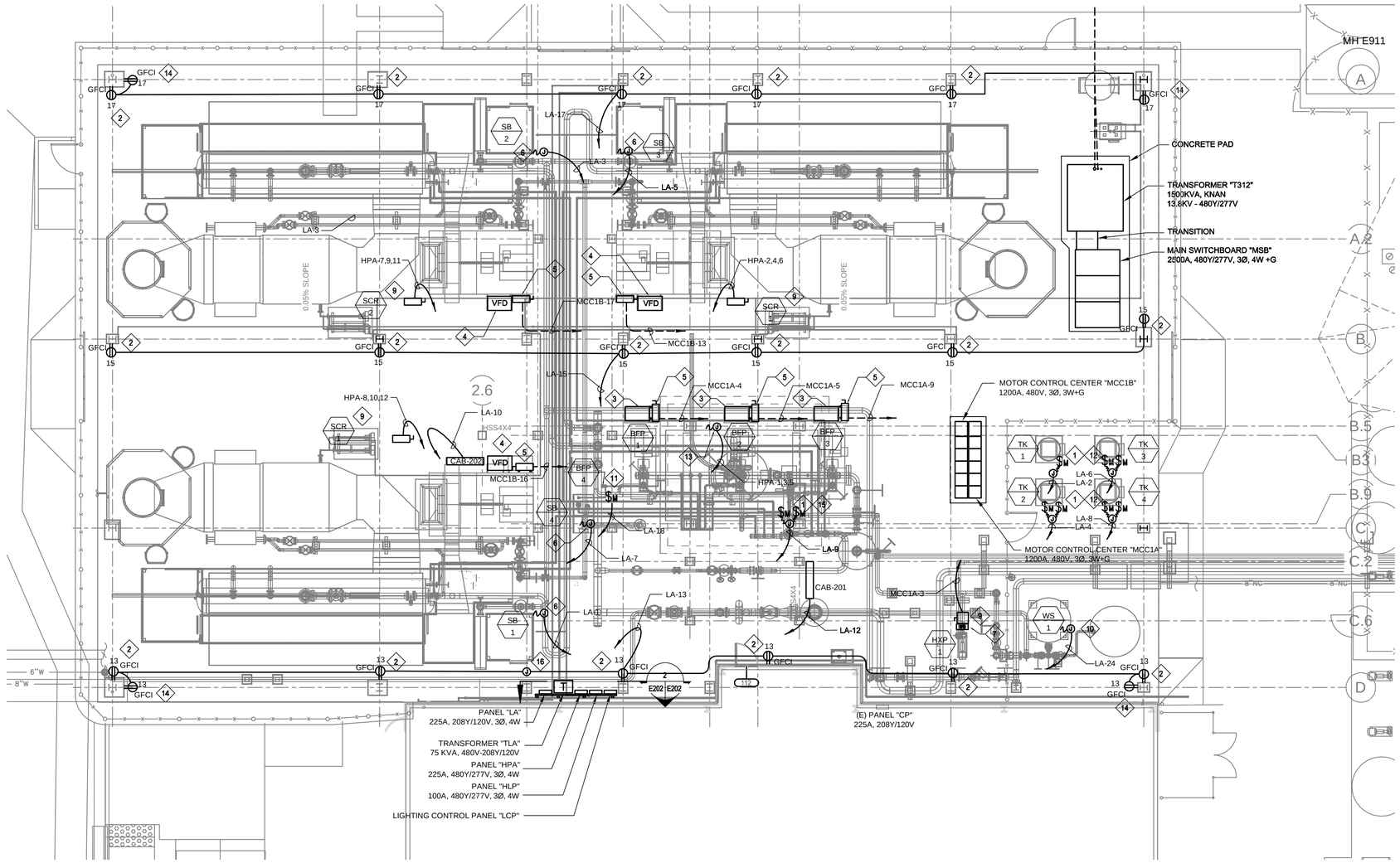

1 BOILER AREA POWER PLAN
E101 E202 SCALE: 1/8"=1'-0"

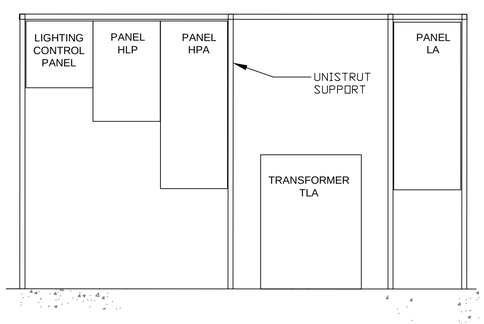

2 DETAIL ELEVATION
E202 E202 SCALE: 1/2" = 1'-0"

SHEET NOTES

1. ALL ELECTRICAL EQUIPMENT AND DEVICES SHALL HAVE WEATHERPROOF TYPE ENCLOSURE.
2. SEE DRAWING G006 FOR A GENERAL DESCRIPTION OF EACH BID OPTION.

KEY NOTES

1. PROVIDE MOTOR STARTER SWITCH, 1-P, THERMAL OVERLOAD, 120V, IN NEMA 3R LOCKABLE ENCLOSURE.
2. PROVIDE WEATHERPROOF GFCI DUPLEX RECEPTACLE MOUNTED AT 18" AFF (TYPICAL).
3. PROVIDE ENCLOSED VARIABLE FREQUENCY DRIVE MODEL SERIES, AF-600 FP PANEL, 200 HP, 460V, WITH 2 CONTACTOR BYPASS WIRING, GENERAL ELECTRIC OR APPROVED EQUAL FOR BOILER FEEDWATER PUMP. PROVIDE COMPLETE CONNECTION PER MANUFACTURER'S RECOMMENDATION.
4. PROVIDE ENCLOSED VARIABLE FREQUENCY DRIVE MODEL SERIES AF-600 FP VFD PANEL, 200 HP, 460V, WITH 2 CONTACTOR BYPASS WIRING, GENERAL ELECTRIC OR APPROVED EQUAL FOR FORCED DRAFT FAN. PROVIDE COMPLETE CONNECTION PER MANUFACTURER'S RECOMMENDATION.
5. PROVIDE NEW 400A, 3P, 480V, NON-FUSED HEAVY DUTY DISCONNECT SWITCH IN NEMA 3R ENCLOSURE, SQUARE D OR APPROVED EQUAL. PROVIDE COMPLETE CONNECTION PER MANUFACTURER'S RECOMMENDATION.
6. 120V POWER FOR STEAM BOILER POWER AND CONTROL. FIELD VERIFY EXACT LOCATION.
7. PROVIDE ENCLOSED VARIABLE FREQUENCY DRIVE MODEL SERIES AF-600 FP VFD PANEL, 10 HP, 460V, NEMA 3R ENCLOSURE, GENERAL ELECTRIC OR APPROVED EQUAL FOR HOT WELL HEAT RECOVERY. PROVIDE COMPLETE CONNECTION PER MANUFACTURER'S RECOMMENDATION.
8. PROVIDE ENCLOSED VARIABLE FREQUENCY DRIVE MODEL SERIES AF-600 FP VFD PANEL, 5 HP, 460V, NEMA 3R ENCLOSURE, GENERAL ELECTRIC OR APPROVED EQUAL FOR AHWS SECONDARY. PROVIDE COMPLETE CONNECTION PER MANUFACTURER'S RECOMMENDATION.
9. PROVIDE NEW 30A, 3P, 480V, NON-FUSED HEAVY DUTY DISCONNECT SWITCH IN NEMA 3R ENCLOSURE, SQUARE D OR APPROVED EQUAL. PROVIDE COMPLETE CONNECTION PER MANUFACTURER'S RECOMMENDATION.
10. 120V POWER FOR WS-1 WATER SOFTENER CONTROLLER. FIELD VERIFY EXACT LOCATION.
11. 120V POWER FOR BOILER FEED PUMP 4.
12. 120V POWER FOR CHEMICAL FEED PUMP MOTORS. FIELD VERIFY EXACT LOCATIONS.
13. 480V POWER FOR HOIST REEL. FIELD VERIFY EXACT LOCATION.
14. PROVIDE WEATHERPROOF GFCI, 5R20 RECEPTACLE FOR VIDEO CAMERA (VC). HEIGHT TO BE DETERMINED AT TIME OF INSTALLATION.
15. 120V POWER FOR HXP-2 AND HXP-3. FIELD VERIFY EXACT LOCATIONS.
16. PROVIDE ADDITIONAL CONVENIENCE RECEPTACLES ON UPPER LEVELS SPACED APPROXIMATELY 20-FT APART. FOR BIDDING PURPOSES, CONTRACTOR SHALL ASSUME 10 WEATHERPROOF 5-20R GFCI RECEPTACLES AND 200-FT OF 3/4" CONDUIT WITH 2-#12 AWG AND #12G CABLES. RECEPTACLES SHALL BE MOUNTED ON GUARD RAILING APPROXIMATELY 12" ABOVE PLATFORM GRATING.

ZONE	LETTER	DESCRIPTION	DRAWN	DATE	APPRVD

REVISIONS

DRAWN H. FORTEZA	DATE	
DESIGNED H. FORTEZA	DATE	
CHECKED J.McCUSKER	DATE	
A&E PM G.HITE	DATE	
NASA PM W.LEE	DATE	
REQUESTER G.RAICHE	DATE	
R&QA	DATE	
SAFETY/PSM	DATE	
SUPERVISOR S.FRANKEL	DATE	

Ames Research Center
Moffett Field, California

REPLACE ARC JET COMPLEX SVS BOILER
ELECTRICAL

BOILER AREA POWER PLAN

SIZE	CAGE CODE		REV
D	25307	A 231-1300-E202	
SCALE 1/8"=1'-0"		INDEX	SHEET OF

FILE NAME: 231-E202.DWG 12/12/12

1/2"=1' 0 1 2 4 6
1/8"=1' 0 4 8 16 24

REGISTERED PROFESSIONAL ENGINEER FREDERICK M. JONES No. E14616 ELECTRICAL STATE OF CALIFORNIA

DWG: R:\234\N0231\92.0001 (K11027) Replace ArcJect Complex SVS Boiler Final Design\500 CAD\E\Sheet\231-E202.dwg Version: 17.1s (LMS Tech) User: wbonaldi
DATE: Jan 28, 2013 - 11:17:17 pm

DWG NO.	SH.	REV
A231-1300-E203		

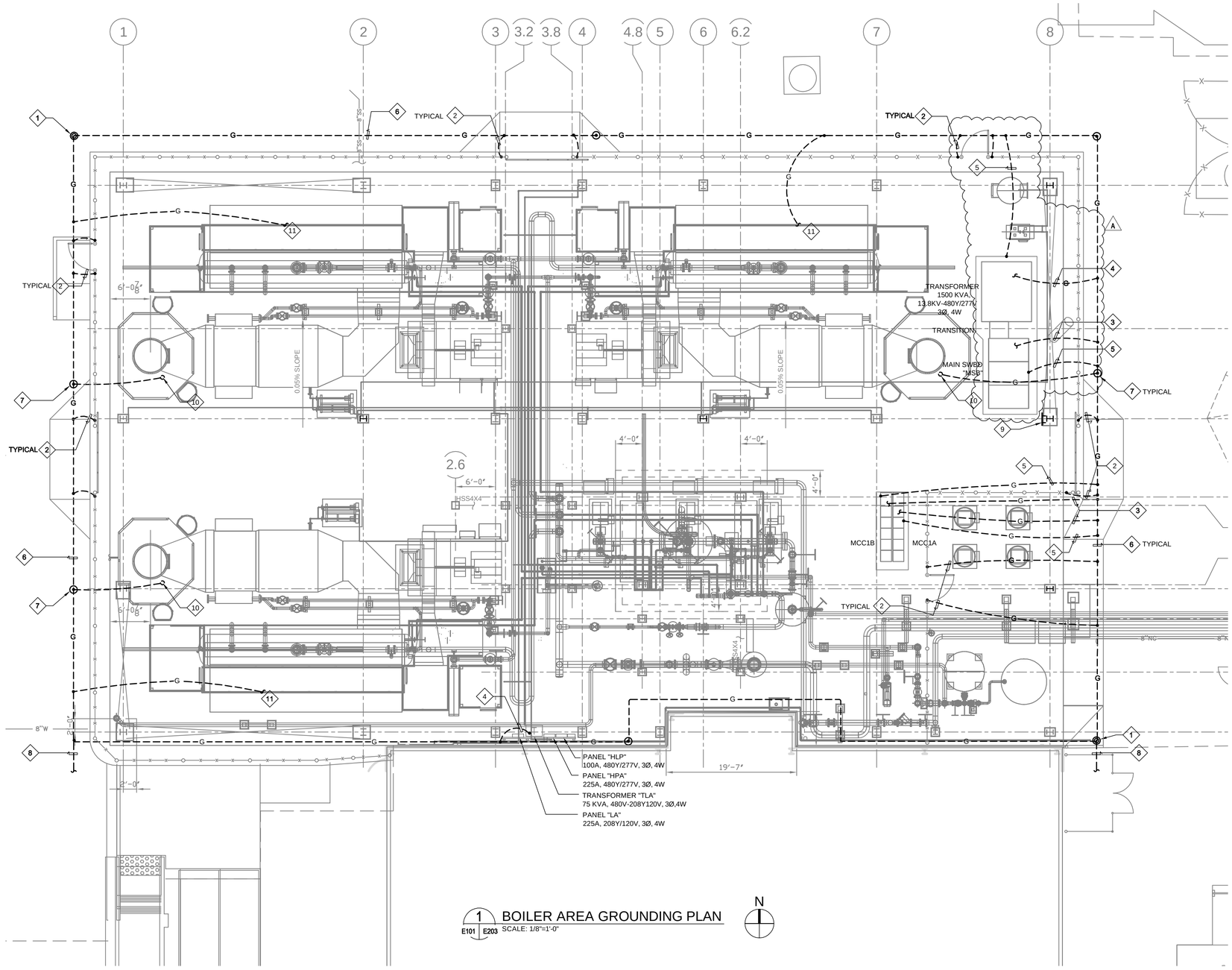

1 BOILER AREA GROUNDING PLAN
E101 E203 SCALE: 1/8"=1'-0"

SHEET NOTES

1. ALL ELECTRICAL ITEMS SHALL BE NEW UNLESS OTHERWISE NOTED AS EXISTING (E).
2. CIRCUIT LAYOUT IS DIAGRAMMATIC ONLY. VERIFY EXACT ROUTING IN FIELD.
3. CONTRACTOR SHALL FIELD VERIFY ALL MEASUREMENT AND EXISTING CONDITION AT THE SITE AND SHALL BE RESPONSIBLE FOR THEIR ACCURACY PRIOR TO STARTING ANY WORK OR ORDERING ANY MATERIALS.
4. GROUND CONDUCTOR TERMINATION AT EQUIPMENT SHALL TERMINATE AT DESIGNATED GROUNDING POINT VIA EXOTHERMIC WELD.
5. ALL GROUND GRID CONDUCTORS ARE BURIED 18" BELOW GRADE.
6. MAXIMUM GROUND RESISTANCE TEST ON THE COMPLETED GROUNDING SYSTEM SHALL NOT EXCEED 5 OHMS. CONTRACTOR SHALL MODIFY AND ADD ADDITIONAL GROUNDING RODS AS REQUIRED TO OBTAIN ACCEPTABLE GROUND RESISTANCE TEST RESULT TO THE SATISFACTION OF THE COTR.
7. ALL NON-CURRENT CARRYING METAL PARTS OF ELECTRICAL AND MECHANICAL EQUIPMENT AND STRUCTURES SHALL BE EFFECTIVELY GROUNDED AND BONDED PER CEC.
8. SEE GROUNDING DETAILS ON E701.

KEY NOTES

1. PROVIDE GROUNDING WELL WITH GROUND ROD CONSISTING OF 3/4" DIA. X 2 - 10 FT. SECTIONS DRIVEN TO A MINIMUM DEPTH OF 20 FEET.
2. PROVIDE #2/0 BARE COPPER WIRE GROUND CONDUCTOR AND CONNECT TO GROUND GRID AND FENCE POST. CONNECT EACH GATE AND FENCE BETWEEN GATES TO GROUND. SEE DETAILS 3 AND 4 ON E701.
3. PROVIDE #4/0 BARE COPPER WIRE GROUND CONDUCTOR, AND CONNECT TO EQUIPMENT GROUND BUS AND/OR PADS.
4. PROVIDE INSULATED # 4/0 AWG IN 1" RGS CONDUIT. CONNECT TO TRANSFORMER NEUTRAL
5. PROVIDE #4/0 AWG BARE COPPER WIRE FOR EQUIPMENT GROUNDING.
6. PROVIDE #4/0 BARE COPPER GROUND CONDUCTOR BURIED 30" BELOW GRADE. PLACE 3' OUTSIDE FENCE. FOR LOCATION OF FENCE, SEE DWG C102.
7. PROVIDE GROUND ROD, CONSISTING OF 3/4" DIA. X 2-10 FT. SECTIONS DRIVEN TO A DEPTH OF 20 FEET.
8. CONNECT TO EXISTING GROUND GRID.
9. PROVIDE 4" X 1/4" X 2' LONG COPPER GROUND BUS BAR. REFER TO DRAWING E701 DETAIL.2.
10. PROVIDE LEAD COVERED COPPER AIR TERMINAL MOUNTED ON TOP OF STACK AND ALL MOUNTING HARDWARE REQUIRED FOR LIGHTNING PROTECTION. REFER TO DRAWING E702, DETAIL #9 FOR ADDITIONAL INFORMATION.
11. PROVIDE #4/0 AWG BARE COPPER WIRES TAP FROM MAIN GROUND LOOP TO BE CONNECTED TO EACH BOILER GROUND STUD PER MANUFACTURER'S REQUIREMENT.

ZONE	LETTER	DESCRIPTION	DRAWN	DATE	APPRVD
	A	BULK AMMONIA TANK SYSTEM	FB	12/12/12	JM

REVISIONS

DRAWN H.FORTEZA	DATE	
DESIGNED H.FORTEZA	DATE	
CHECKED J.McCUSKER	DATE	
A&E PM G.HITE	DATE	
NASA PM W.LEE	DATE	
REQUESTER G.RAICHE	DATE	
R&QA -	DATE	
SAFETY/PSM	DATE	
SUPERVISOR S.FRANKEL	DATE	

Ames Research Center
Moffett Field, California

REPLACE ARC JET COMPLEX SVS BOILER
ELECTRICAL

BOILER AREA GROUNDING PLAN

SIZE	CAGE CODE	REV
D	25307	A 231-1300-E203
SCALE AS NOTED	INDEX	SHEET OF

FILE NAME: 231-E203.DWG 12/12/12

REGISTERED PROFESSIONAL ENGINEER FREDERICK M. JONES No. E14616 ELECTRICAL STATE OF CALIFORNIA

1/8"=1' 0 4 8 16 24

DWG: R:\234N\60212932.0001 (K11027) Replace Arc Jet Complex SVS Boiler Final Design\500 CADIE\Sheet\231-E203.dwg Version: 17.1s (LMS Tech) User: wdonald
DATE: Jan 28, 2013 - 1:16:04 pm

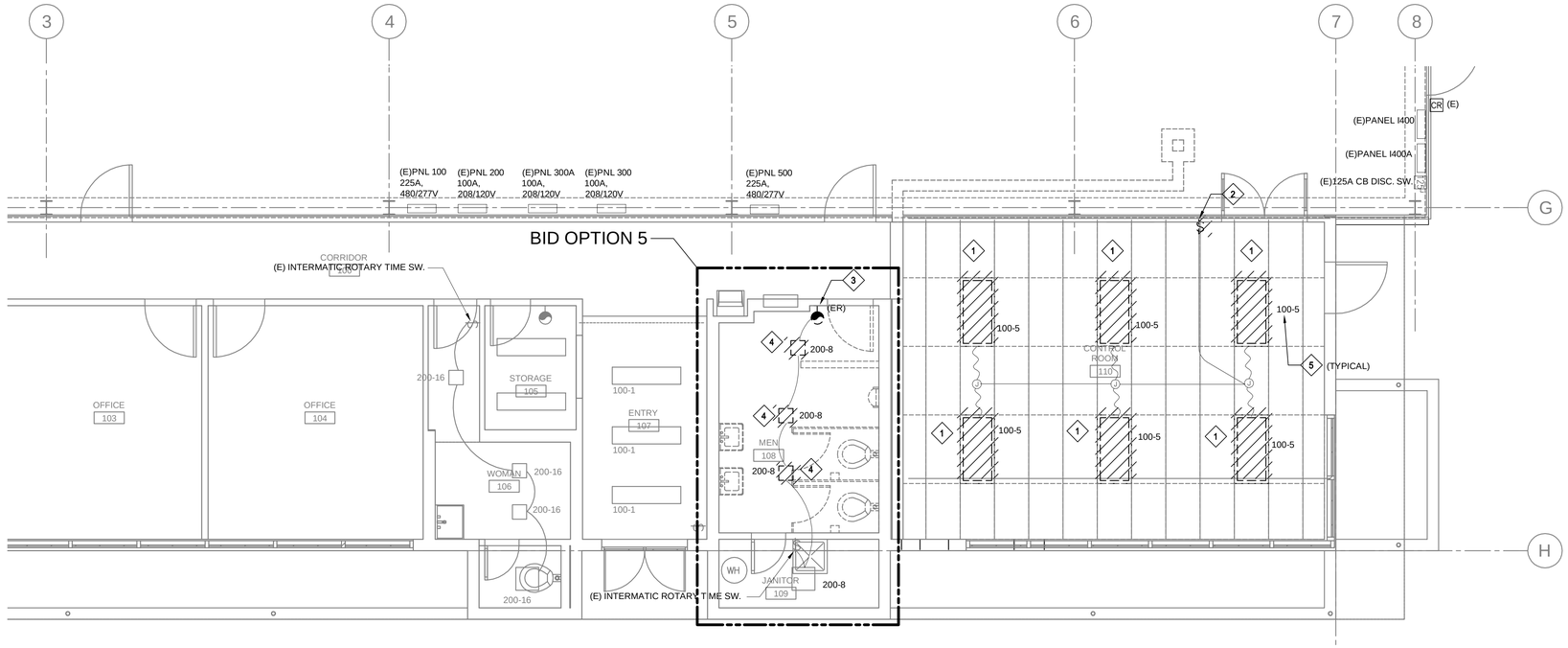

1 OFFICE LIGHTING PLAN - DEMOLITION
E101 E204 SCALE: 1/4"=1'-0"

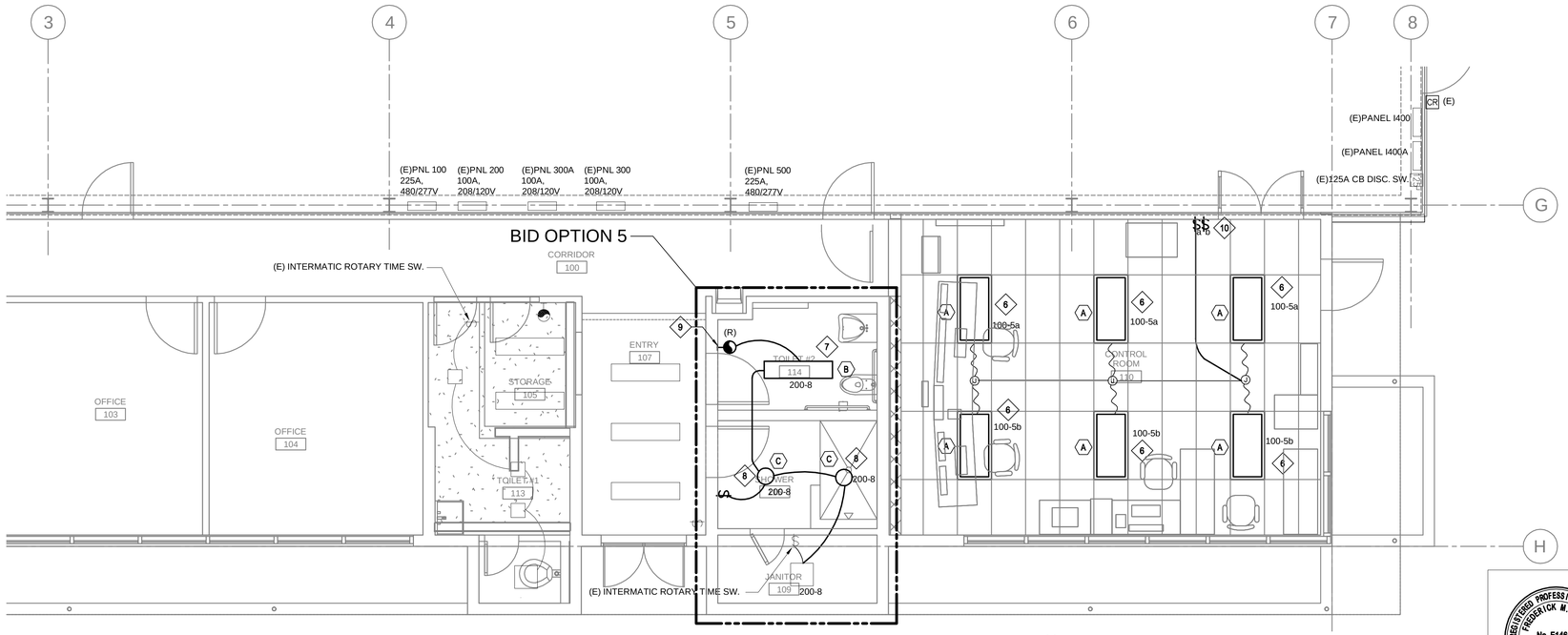

2 OFFICE LIGHTING PLAN - NEW WORK
E101 E204 SCALE: 1/4"=1'-0"

1/4"=1' 0 2 4 8 12

SHEET NOTES

1. HATCH LINES INDICATE (E) ELECTRICAL ITEMS TO BE DISCONNECTED AND REMOVED, UNLESS OTHERWISE NOTED.
2. SEE DRAWING G006 FOR A GENERAL DESCRIPTION OF EACH BID OPTION.

KEY NOTES

1. DEMOLISH EXISTING 2'X4', 3-LAMP RECESSED FLUORESCENT FIXTURE FROM THE CEILING AS SHOWN. CONDUIT AND WIRING SHALL REMAIN IN PLACE. IDENTIFY WIRING AND PROTECT FROM DAMAGE FOR RECONNECTION IN THE NEW CONSTRUCTION.
2. DISCONNECT AND REMOVED (E) LIGHT SWITCH AS INDICATED.
3. DISCONNECT EXISTING OCCUPANCY SENSOR AND RELOCATE TO NEW LOCATION AS SHOWN ON E205.
4. DEMOLISH EXISTING 10"x10" RECESSED LIGHTING FIXTURE FROM THE CEILING AS SHOWN. CONDUIT AND WIRING SHALL REMAIN IN PLACE. IDENTIFY WIRING AND PROTECT FROM DAMAGE FOR RECONNECTION IN THE NEW CONSTRUCTION.
5. PANEL AND CIRCUIT NUMBER.
6. PROVIDE 3-LAMPS, 2'X4' RECESSED FLUORESCENT LIGHTING FIXTURES AND RECONNECT TO EXISTING CIRCUIT. REFER TO LIGHTING FIXTURE SCHEDULE ON SHEET E601 FOR FIXTURE TYPE.
7. PROVIDE 2-LAMPS, 1'X4', SURFACE CEILING MOUNTED LIGHTING FIXTURE AND RECONNECT TO EXISTING CIRCUIT. REFER TO LIGHTING FIXTURE SCHEDULE ON SHEET E601 FOR FIXTURE TYPE.
8. PROVIDE SURFACE CEILING MOUNTED COMPACT FLUORESCENT LIGHTING FIXTURE AND RECONNECT TO EXISTING CIRCUIT. REFER TO LIGHTING FIXTURE SCHEDULE ON SHEET E601 FOR FIXTURE TYPE.
9. NEW LOCATION OF EXISTING OCCUPANCY SENSOR AS INDICATED.
10. PROVIDE 2 277V, 1-POLE LIGHT SWITCHES AS SHOWN.

ZONE	LETTER	DESCRIPTION	DRAWN	DATE	APPRVD

REVISIONS

DRAWN H. FORTEZA	DATE
DESIGNED H. FORTEZA	DATE
CHECKED J.McCUSKER	DATE
A&E PM G.HITE	DATE
NASA PM W.LEE	DATE
REQUESTER G.RAICHE	DATE
R&QA	DATE
SAFETY/PSM	DATE
SUPERVISOR S.FRANKEL	DATE

REGISTERED PROFESSIONAL ENGINEER FREDERICK M. JONES No. E14616 ELECTRICAL STATE OF CALIFORNIA

Ames Research Center
Moffett Field, California

REPLACE ARC JET COMPLEX SVS BOILER
ELECTRICAL
OFFICE LIGHTING PLAN - DEMOLITION AND NEW WORK

SIZE	CAGE CODE	REV
D	25307	A 231-1300-E204
SCALE 1/4"=1'-0"	INDEX	SHEET OF

FILE NAME: 231-E204.DWG 12/12/12

DWG: R:\234\60212932.0001 (K11027) Replace Arc-Ject Complex SVS Boiler Final Design\500 CAD\E\Sheet\231-E204.dwg Version: 17.1s (LMS Tech) User: wbonaldi
DATE: Jan 28, 2013 - 11:43:5 pm

DWG NO.	SH.	REV
A231-1300-E205		

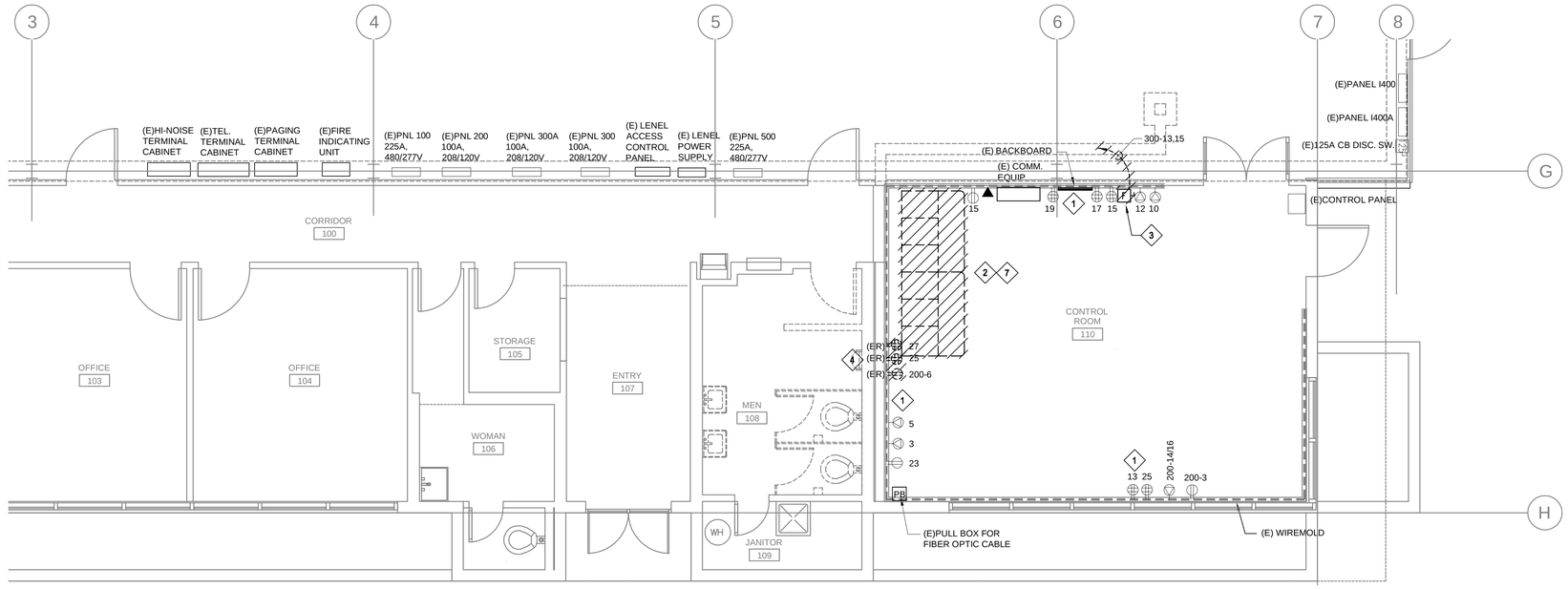

1 CONTROL ROOM POWER PLAN - DEMOLITION
E101 E205 SCALE: 1/4"=1'-0"

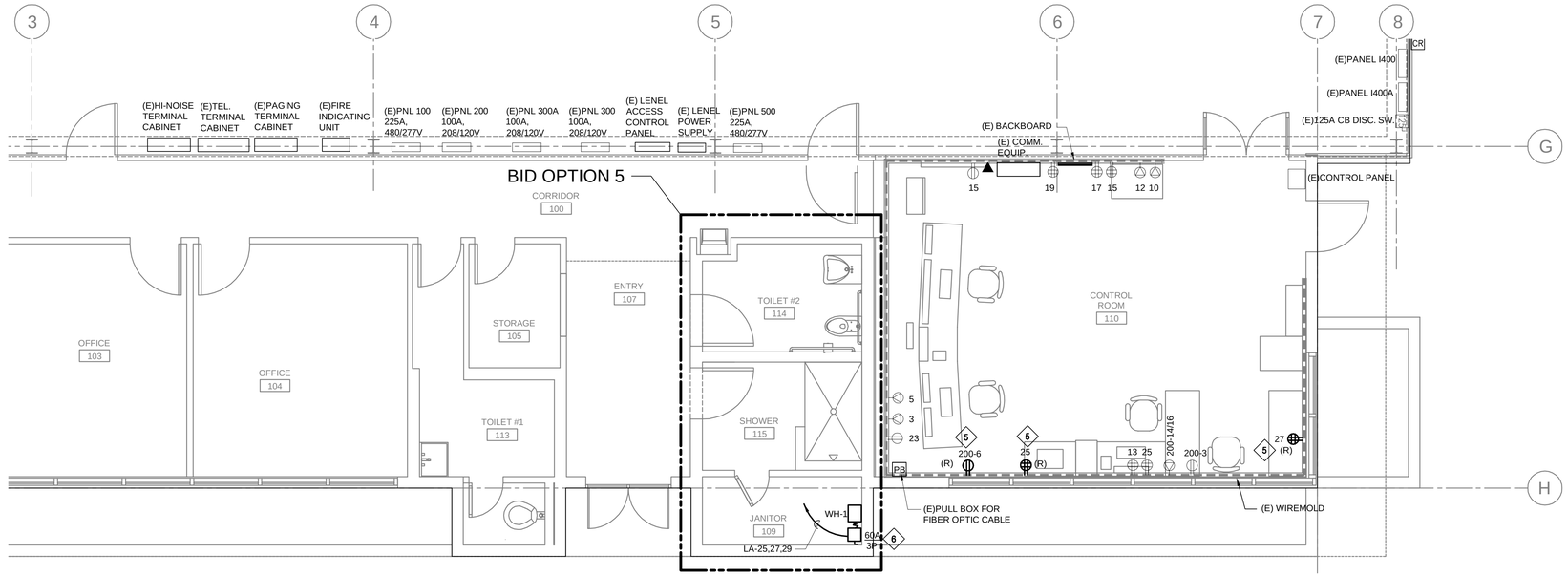

2 OFFICE POWER PLAN - NEW WORK
E101 E205 SCALE: 1/4"=1'-0"

1/4"=1' 0 2 4 8 12

SHEET NOTES

1. HATCH LINES INDICATE (E) ELECTRICAL ITEMS TO BE DISCONNECTED AND REMOVED, UNLESS OTHERWISE NOTED.
2. SEE DRAWING G006 FOR A GENERAL DESCRIPTION OF EACH BID OPTION.

KEY NOTES

1. ALL (E) RECEPTACLES MOUNTED ON (E) WIREWAY FED FROM (E) PANEL "CP" AND PANEL "200" ARE TO REMAIN UNLESS OTHERWISE NOTED. FOR LOCATION OF PANEL CP SEE DWG E202.
2. DEMOLISH EXISTING CONTROL MODULE AS INDICATED. DISCONNECT ALL WIRING LEAVING THE CONTROL MODULE. TAPE EACH WIRE, COIL IN TRENCH, AND PROTECT FROM DAMAGE. COORDINATE WITH COTR PRIOR TO DEMOLITION.
3. DISCONNECT AND REMOVE EXISTING 30A, 2-POLE DISCONNECT SWITCH AND ASSOCIATED WIRES AND CONDUIT FOR (E) SCANNING ELECTRON MICROSCOPE PROCESS TOOL BACK TO SOURCE . LABEL CIRCUIT BREAKER FROM PANEL 300 AS "SPARE".
4. EXISTING RECEPTACLES TO BE RELOCATED. SEE DETAIL 2 FOR NEW LOCATION.
5. INSTALL RELOCATED RECEPTACLES AS INDICATED. USE EXISTING CIRCUIT AND EXTEND WIRES TO NEW RECEPTACLE LOCATIONS.
6. PROVIDE 60A, 3P, 480V, NON-FUSED HEAVY DUTY DISCONNECT SWITCH FOR TANKLESS WATER HEATER IN NEMA 1 ENCLOSURE, SQUARE D OR APPROVED EQUAL. PROVIDE 3 #4 + 1 #10 (G) IN 1" EMT CONDUIT.
7. PROVIDE METAL TRENCH COVER PLATES SIMILAR TO EXISTING PLATES.

ZONE	LETTER	DESCRIPTION	DRAWN	DATE	APPRVD

REVISIONS

DRAWN H. FORTEZA	DATE
DESIGNED H. FORTEZA	DATE
CHECKED J.McCUSKER	DATE
A&E PM G.HITE	DATE
NASA PM W.LEE	DATE
REQUESTER G.RAICHE	DATE
R&QA -	DATE
SAFETY/PSM	DATE
SUPERVISOR S.FRANKEL	DATE

REGISTERED PROFESSIONAL ENGINEER FREDERICK M. JONES No. E14616 ELECTRICAL STATE OF CALIFORNIA

Ames Research Center
Moffett Field, California

REPLACE ARC JET COMPLEX SVS BOILER
ELECTRICAL

OFFICE AND CONTROL ROOM POWER PLAN - DEMOLITION AND NEW WORK

SIZE	CAGE CODE	REV
D	25307	A
SCALE 1/4"=1'-0"	INDEX	SHEET OF

FILE NAME: 231-E205.DWG 12/12/12

DWG: R:\23AA60212932.0001 (K11027) Replace Arc Ject Complex SVS Boiler Final Design\500 CAD\E\Sheet\231-E205.dwg Version: 17.1s (LMS Tech) User: wbonaldi
DATE: Jan 28, 2013 - 1:13:03 pm

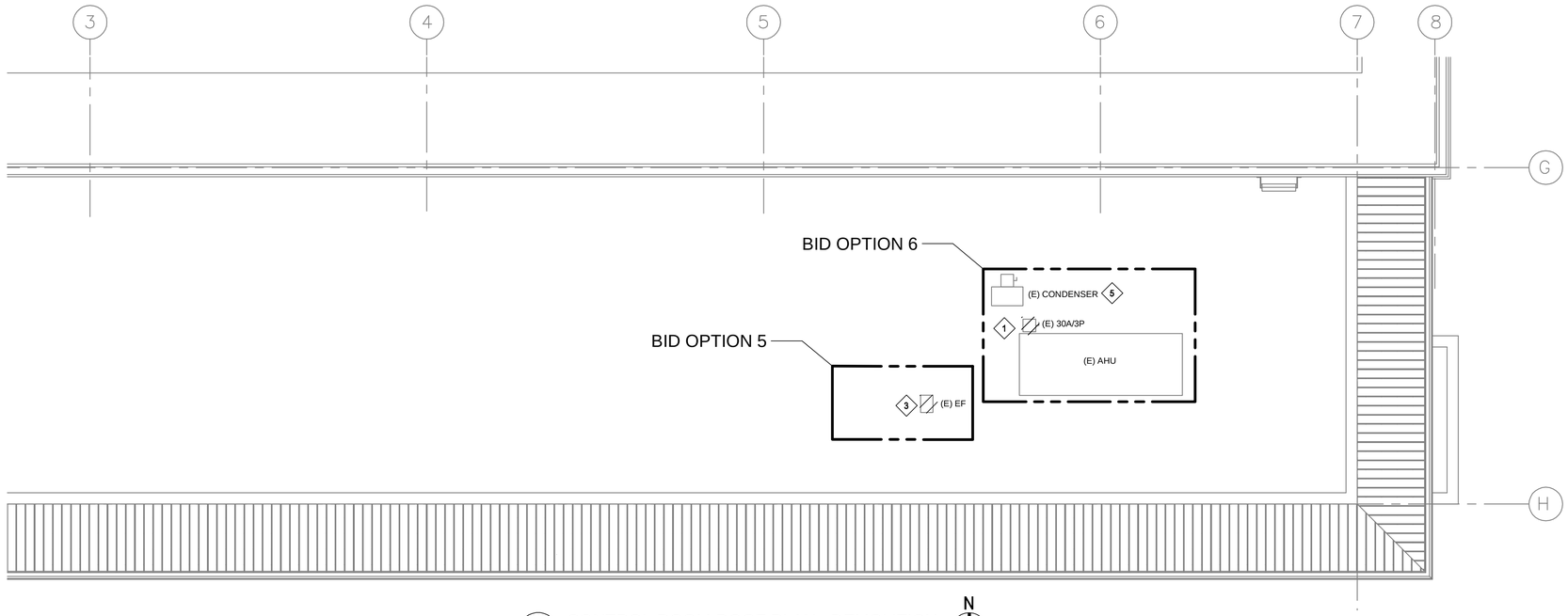

1 CONTROL ROOM ROOF PLAN - DEMOLITION
E101 E206 SCALE: 1/4"=1'-0"

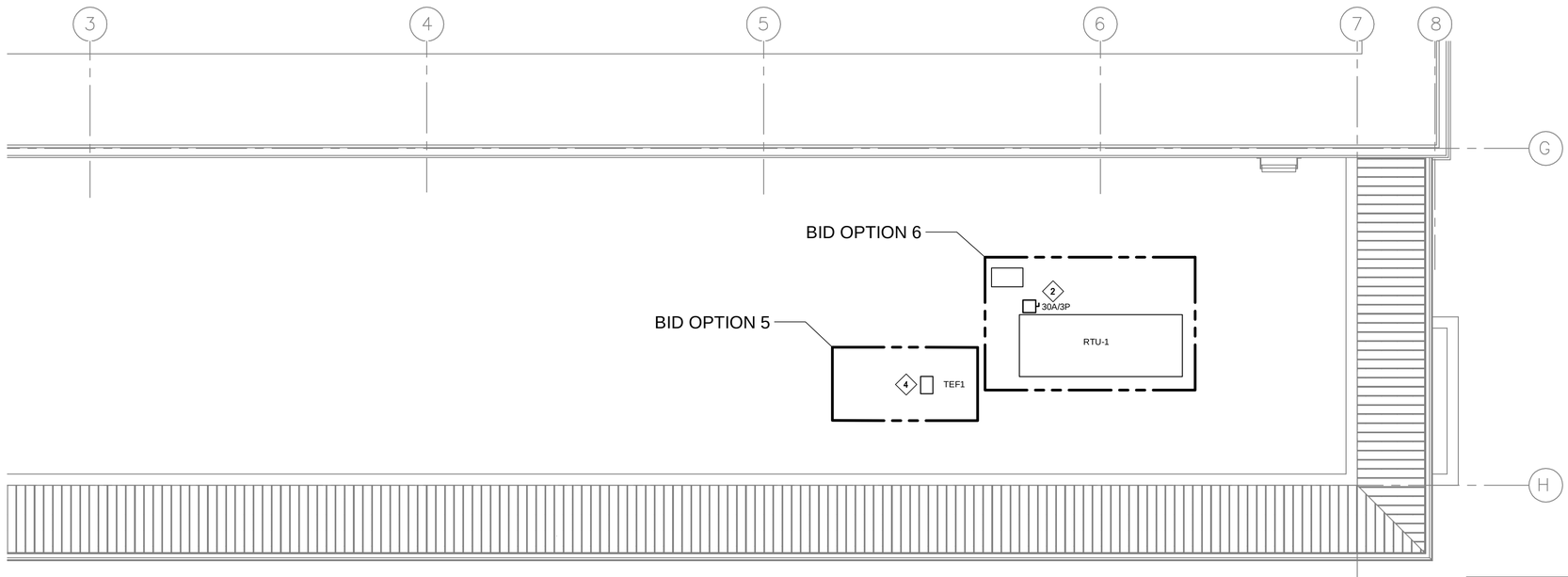

2 CONTROL ROOM ROOF PLAN - NEW WORK
E101 E206 SCALE: 1/4"=1'-0"

1/4"=1' 0 2 4 8 12

SHEET NOTES

1. SEE DRAWING G006 FOR A GENERAL DESCRIPTION OF EACH BID OPTION.

KEY NOTES

1. DISCONNECT AND REMOVE EXISTING 30A, 3-POLE, 600V DISCONNECT SWITCH FOR AC UNIT TO BE DEMOLISHED. IDENTIFY ALL WIRING TO INCLUDE FMCS AND PROTECT FROM DAMAGE FOR RECONNECTION IN THE NEW WORK. FED FROM PANEL 500 CKT 8-10-12. FOR LOCATION , SEE DWG E205.
2. PROVIDE 30A, 3-POLE, 600V, HEAVY DUTY DISCONNECT SWITCH IN NEMA 3R ENCLOSURE FOR NEW AC UNIT, SQUARE D OR APPROVED EQUAL. RECONNECT EXISTING 15A CIRCUIT TO NEW DISCONNECT SWITCH. FOR CONTROL CIRCUIT WIRING CONNECTION TO NEW AC UNIT, SEE DWG M706. REUSE (E) CONDUITS OR PROVIDE CONDUITS AS REQUIRED.
3. DISCONNECT (E) EXHAUST FAN MOTOR AND PROTECT CABLE FOR RECONNECTION IN NEW WORK.
4. RECONNECT (E) CABLE TO NEW EXHAUST FAN, TEF-1. SEE DETAIL 1 ON DWG M518.
5. DISCONNECT AND REMOVE EXISTING 30A, 3-POLE, 600V DISCONNECT SWITCH FOR CONDENSER UNIT TO BE DEMOLISHED. IDENTIFY ALL WIRING TO INCLUDE FMCS AND POWER AND DEMOLISH BACK TO SOURCE.

REGISTERED PROFESSIONAL ENGINEER FREDERICK M. JONES No. E14616 ELECTRICAL STATE OF CALIFORNIA

ZONE	LETTER	DESCRIPTION	DRAWN	DATE	APPRVD

REVISIONS

DRAWN H. FORTEZA	DATE
DESIGNED H. FORTEZA	DATE
CHECKED J.McCUSKER	DATE
A&E PM G.HITE	DATE
NASA PM W.LEE	DATE
REQUESTER G.RAICHE	DATE
R&QA -	DATE
SAFETY/PSM	DATE
SUPERVISOR S.FRANKEL	DATE

Ames Research Center
Moffett Field, California

REPLACE ARC JET COMPLEX SVS BOILER
ELECTRICAL

CONTROL ROOM ROOF PLAN
DEMOLITION AND NEW WORK

SIZE	CAGE CODE		REV
D	25307	A 231-1300-E206	
SCALE 1/4"=1'-0"		INDEX	SHEET OF

FILE NAME: 231-E206.DWG 12/12/12

DWG NO. A231-1300-E206 SH. REV

DWG: R:\23AA60212932.0001 (K11027) Replace Arc Jet Complex SVS Boiler Final Design\500 CAD\E\Sheet\231-E206.dwg Version: 17.1s (LMS Tech) User: wbonaldi
DATE: Jan 28, 2013 - 1:12:06 pm

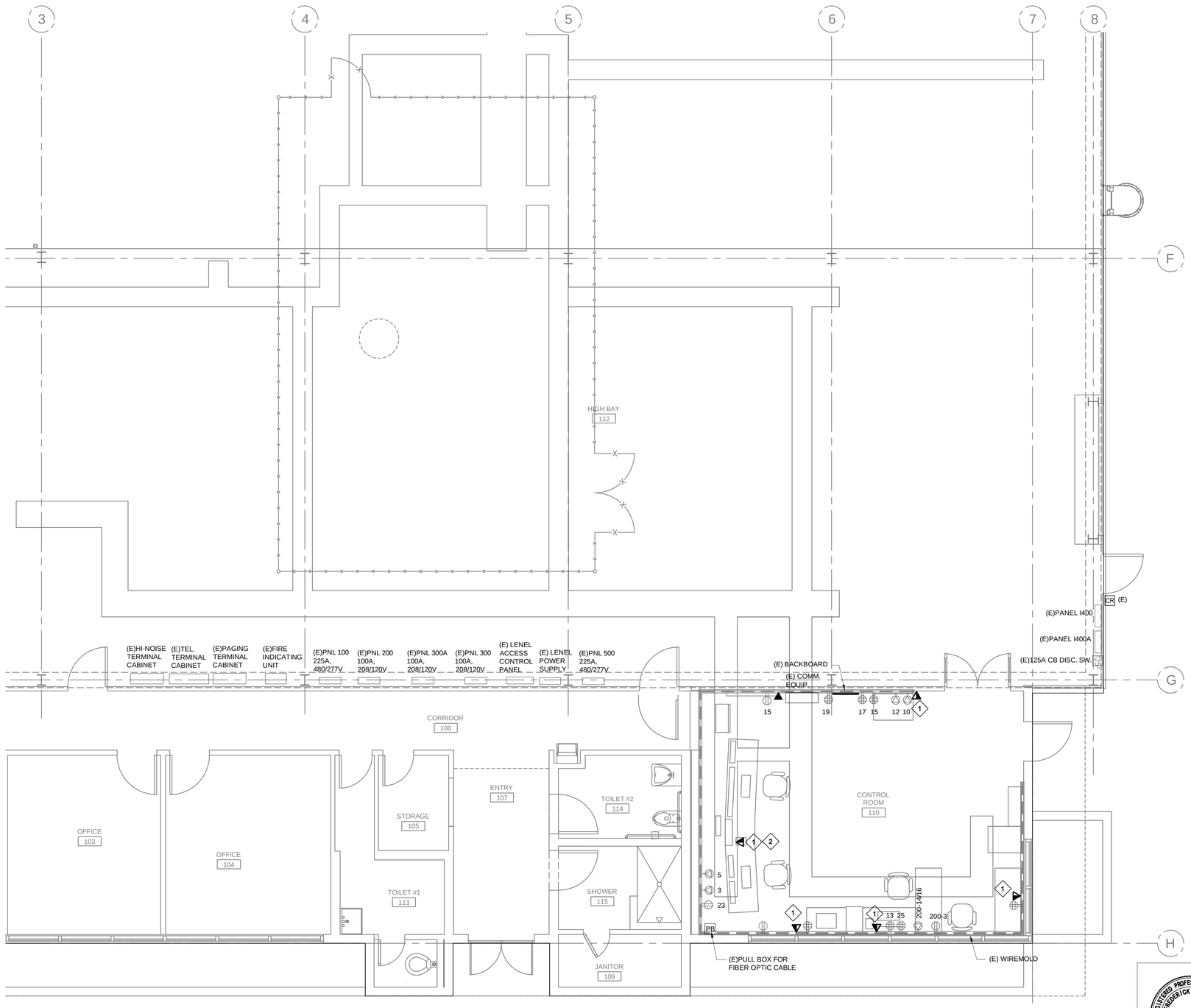

1 CONTROL ROOM VOICE & DATA COMMUNICATION PLAN - NEW WORK
E101 E207 SCALE: 1/4"=1'-0"

N

1/4"=1' 0 2 4 8 12

REGISTERED PROFESSIONAL ENGINEER FREDERICK M. JONES No. E14616 ELECTRICAL STATE OF CALIFORNIA

DWG NO.	SH.	REV
A231-1300-E207		

SHEET NOTES

KEY NOTES

1. PROVIDE TELEPHONE/DATA OUTLET AND 1 1/4" CONDUIT ONLY WITH PULL STRING IN NEW JUNCTION BOX ABOVE CEILING AS NECESSARY. COORDINATE EXACT LOCATION WITH CONSTRUCTION MANAGER PRIOR TO ROUGH-IN. TELE/DATA WIRING CONNECTION SHALL BE DONE BY NASA AMES TELECOMMUNICATION GROUP.
2. REFER TO J602 I & C DRAWING FOR INTERCOM SYSTEM CONTROL BLOCK DIAGRAM.

ZONE	LETTER	DESCRIPTION	DRAWN	DATE	APPRVD

REVISIONS

DRAWN H. FORTEZA	DATE
DESIGNED H. FORTEZA	DATE
CHECKED J. McCUSKER	DATE
A&E PM G.HITE	DATE
NASA PM W.LEE	DATE
REQUESTER G.RAICHE	DATE
R&QA	DATE
SAFETY/PSM	DATE
SUPERVISOR S.FRANKEL	DATE

Ames Research Center
Moffett Field, California

REPLACE ARC JET COMPLEX SVS BOILER
ELECTRICAL

CONTROL ROOM VOICE AND DATA COMMUNICATION PLAN - NEW WORK

SIZE	CAGE CODE		REV
D	25307	A 231-1300-E207	
SCALE 1/4"=1'-0"		INDEX	SHEET OF

FILE NAME: 231-E207.DWG 12/12/12

DWG: R:\234A\60212932.0001 (K11027) Replace ArcJect Complex SVS Boiler Final Design\500 CAD\ES\Sheet\231-E207.dwg Version: 17.1s (LMS Tech) User: wbonaldi
DATE: Jan 28, 2013 - 11:51 pm

DWG NO.	SH.	REV
A231-1300-E208	.	

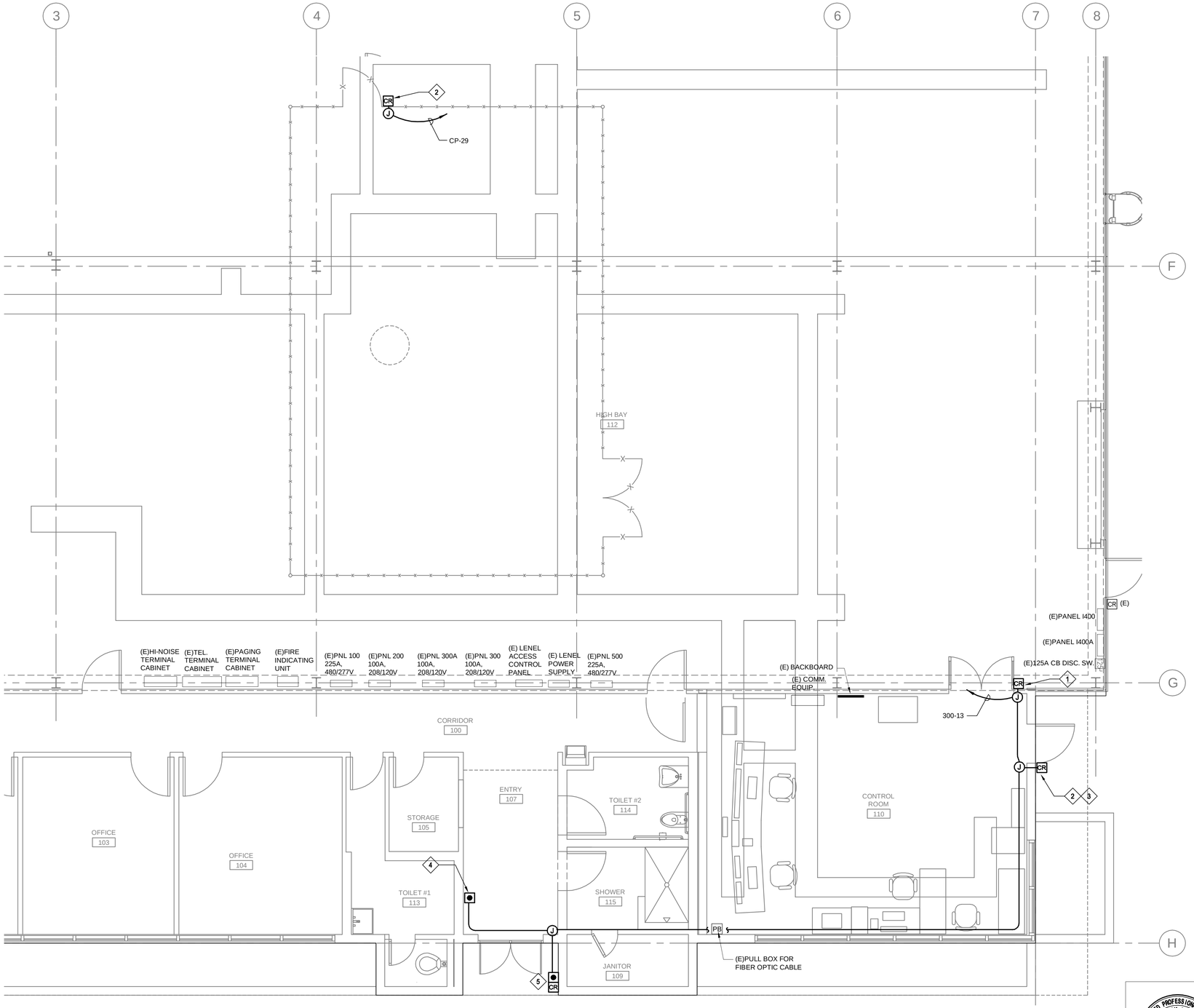

1 OFFICE AND HIGHBAY SECURITY AND MONITORING SYSTEM PLAN - NEW WORK
E101 E208 SCALE: 1/4"=1'-0"

N

SHEET NOTES

KEY NOTES

1. REMOVE EXISTING CARD READER AND REPLACE WITH NEW HID RP40 PROXPR0 CARD READER MOUNTED TO DOUBLE GANG METAL BOX. SEE DETAIL #4 ON SHEET E704.
2. PROVIDE HID RP40 PROXPRO CARD READER MOUNTED TO DOUBLE GANG METAL BOX.
3. REFER TO DRAWINGS E704, DETAIL #2 FOR ADDITIONAL INFORMATION.
4. PROVIDE PUSH BUTTON DOOR ACTUATOR MOUNTED AT 36" AFF.
5. REMOVE EXISTING CARD READER LOCATED AT MAIN ENTRANCE DOUBLE DOOR AND REPLACE WITH COMBINATION OF NEW CARD READER AND PUSH BUTTON DOOR ACTUATOR MOUNTED AT 36" AFF AS SHOWN. SEE E704, DETAIL #5 FOR ADDITIONAL INFORMATION.

ZONE	LETTER	DESCRIPTION	DRAWN	DATE	APPRVD

REVISIONS

DRAWN H. FORTEZA	DATE	
DESIGNED H. FORTEZA	DATE	
CHECKED J.McCUSKER	DATE	
A&E PM G.HITE	DATE	
NASA PM W.LEE	DATE	
REQUESTER G.RAICHE	DATE	
R&QA	DATE	
SAFETY/PSM	DATE	
SUPERVISOR S.FRANKEL	DATE	

REGISTERED PROFESSIONAL ENGINEER FREDERICK M. JONES No. E14616 ELECTRICAL STATE OF CALIFORNIA

Ames Research Center
Moffett Field, California

REPLACE ARC JET COMPLEX SVS BOILER
ELECTRICAL
OFFICE AND HIGHBAY SECURITY AND MONITORING SYSTEM PLAN - NEW WORK

SIZE	CAGE CODE		REV
D	25307	231-1300-E208	
SCALE 1/4"=1'-0"		INDEX	SHEET . OF .

FILE NAME: 231-E208.DWG 12/12/12

DWG: P:\234A\60212932.0001 (K11027) Replace ArcJect Complex SVS Boiler Final Design\500 CAD\ES\Sheet\231-E208.dwg Version: 17.1s (LMS Tech) User: vbonaldi
DATE: Jan 28, 2013 - 11:39 pm

DWG NO.	SH.	REV
A231-1300-E209		

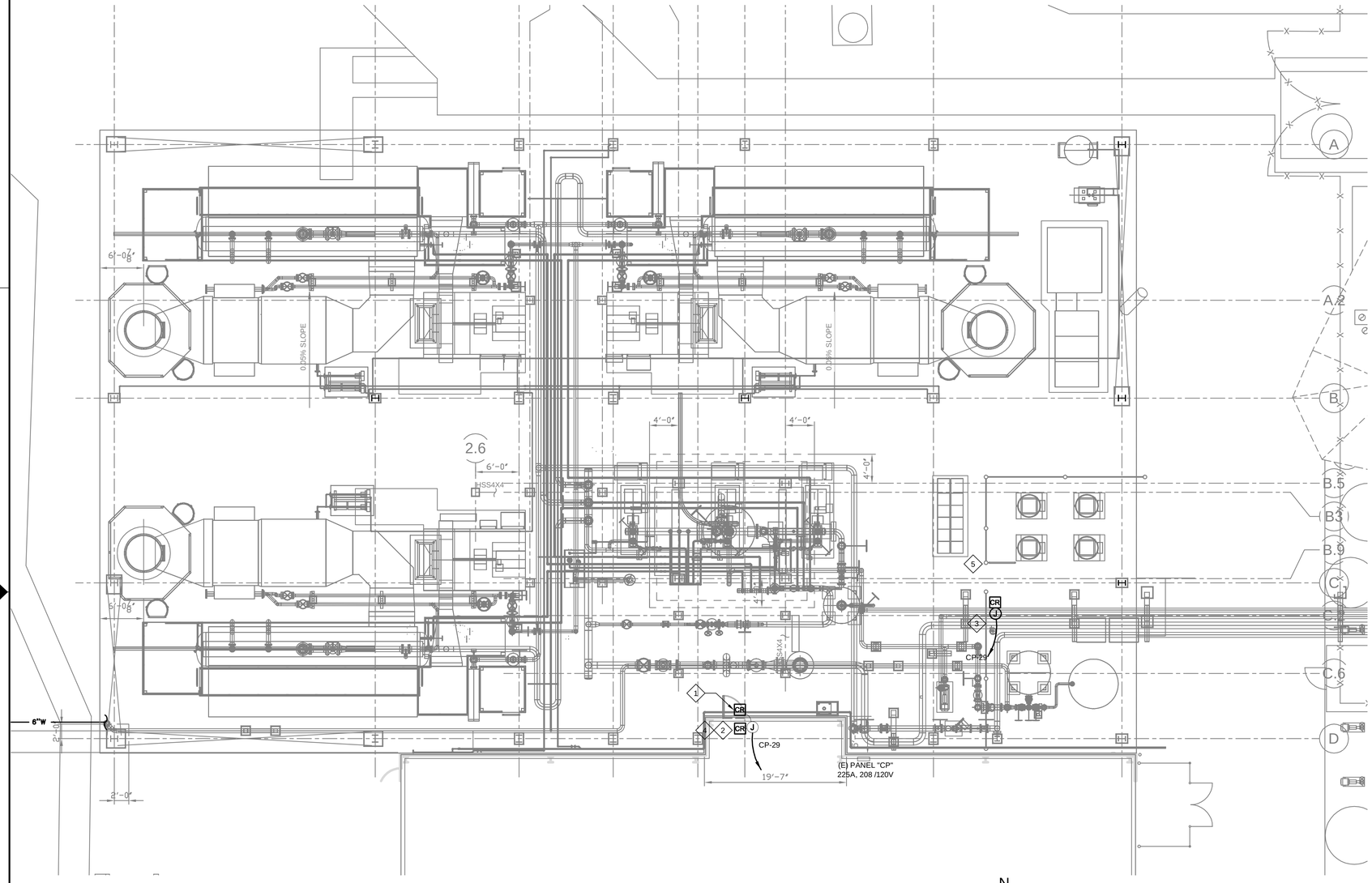

1 BOILER AREA SECURITY AND MONITORING SYSTEM PLAN
E101 E209 SCALE: 1/8"=1'-0"

N

1/8"=1' 0 4 8 16 24

SHEET NOTES

KEY NOTES

1. REMOVE EXISTING CARD READER AND REPLACE WITH NEW HID RP40 PROXPRO CARD READER.
2. PROVIDE HID RP40 PROXPRO CARD READER MOUNTED TO DOUBLE GANG METAL BOX.
3. PROVIDE HID RP40 PROXPRO CARD READER MOUNTED TO GOOSENECK. SEE DETAIL #6 ON SHEET E704.
4. REFER TO DRAWINGS E704, DETAIL #3 FOR ADDITIONAL INFORMATION.
5. PROVIDE ELECTRIC LOCKING MECHANISM ON THE MANGATE THAT IS COMPATIBLE WITH THE CARD READER. SEE KEY NOTE 3. FOR GATE MECHANISM, SEE CIVIL DRAWINGS.

REGISTERED PROFESSIONAL ENGINEER FREDERICK M. JONES No. E14616 ELECTRICAL STATE OF CALIFORNIA

ZONE	LETTER	DESCRIPTION	DRAWN	DATE	APPRVD

REVISIONS

DRAWN H. FORTEZA	DATE
DESIGNED H. FORTEZA	DATE
CHECKED J.McCUSKER	DATE
A&E PM G.HITE	DATE
NASA PM W.LEE	DATE
REQUESTER G.RAICHE	DATE
R&QA	DATE
SAFETY/PSM	DATE
SUPERVISOR S.FRANKEL	DATE

Ames Research Center
Moffett Field, California

REPLACE ARC JET COMPLEX SVS BOILER
ELECTRICAL
BOILER AREA SECURITY
AND MONITORING SYSTEM PLAN

SIZE	CAGE CODE		REV
D	25307	A 231-1300-E209	
SCALE 1/8"=1'-0"		INDEX	SHEET OF

FILE NAME:
231-E209.DWG 12/12/12

DWG: R:\23AA\60213932.0001(K11027) Replace Arc Jet Complex SVS Boiler Final Design\500 CAD\E\Sheet\231-E209.dwg Version: 17.1s (LMS Tech) User: wbonaldi
DATE: Jan 28, 2013 - 11:11:12 pm

DWG NO.	SH.	REV
A231-1300-E210		

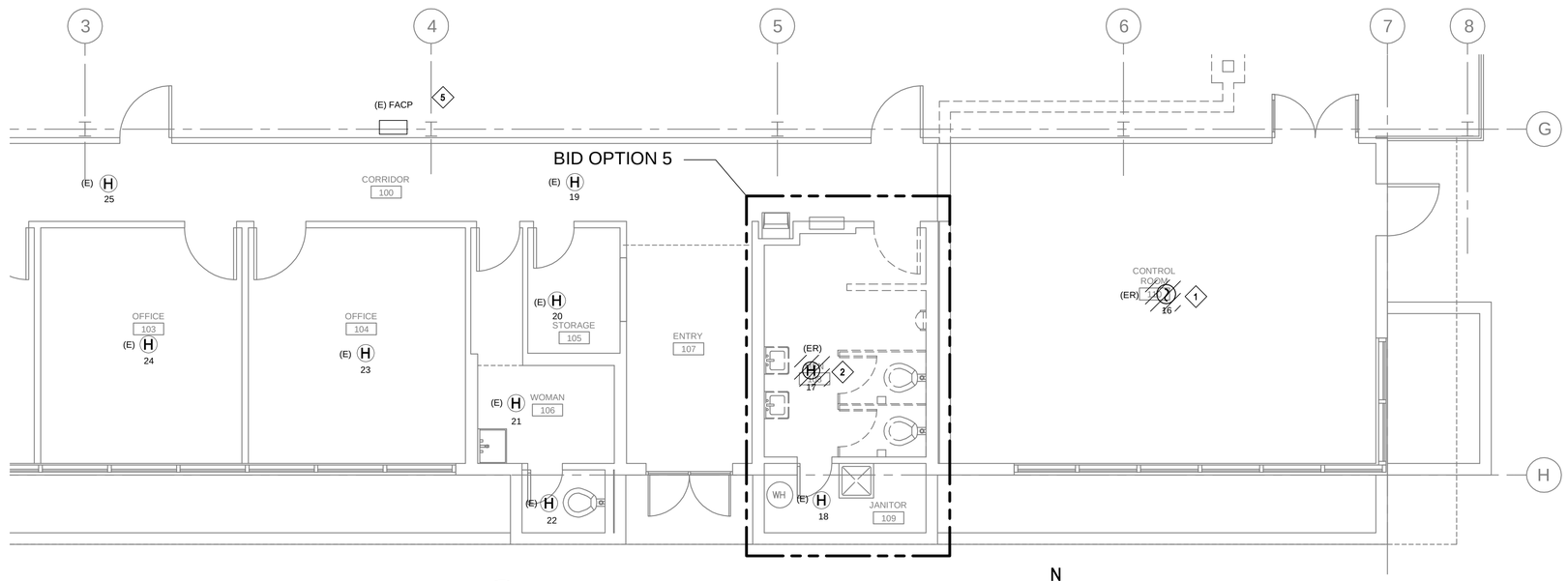

1 E101 E210 OFFICE FIRE ALARM PLAN - DEMOLITION
SCALE: 1/4"=1'-0"

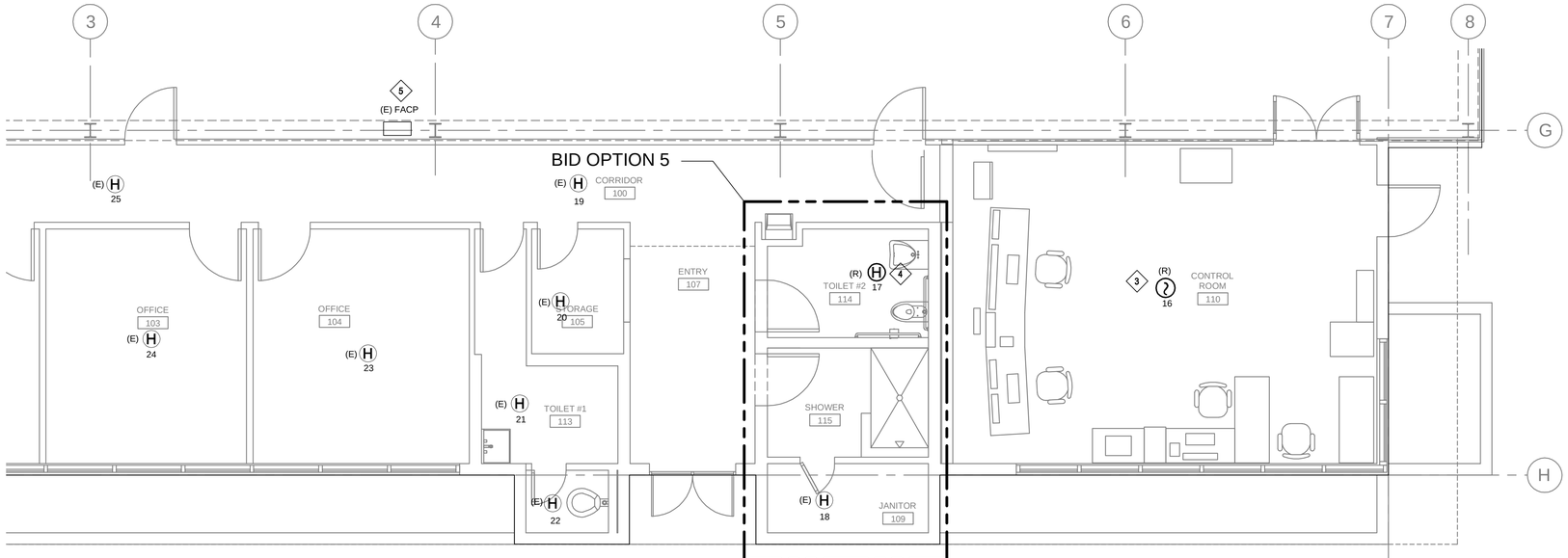

2 E101 E210 OFFICE FIRE ALARM PLAN - NEW WORK
SCALE: 1/4"=1'-0"

SHEET NOTES

1. HATCH LINES INDICATE (E) ELECTRICAL ITEMS TO BE DISCONNECTED AND REMOVED, UNLESS OTHERWISE NOTED.
2. EXISTING FIRE ALARM SYSTEM SHALL BE KEPT OPERATIONAL UNTIL THE REINSTALLATION OF EXISTING FIRE ALARM SYSTEM IS COMPLETED IN IT'S ENTIRETY THROUGH ALL PHASES, TESTED, ACCEPTED AND PUT INTO OPERATION. ANY REQUIRED DISRUPTION TO THE EXISTING SYSTEM SHALL BE COORDINATED WITH THE CONSTRUCTION MANAGER AND NASA AMES FIRE ALARM TECHNICIAN. A SYSTEM IMPAIRMENT PLAN SHALL BE DEVELOPED IN ACCORDANCE WITH SECTIONS 10 AND 19 OF NFPA-72.
3. UPON COMPLETION OF THIS WORK, THE CONTRACTOR SHALL PERFORM A COMPLETE FUNCTIONAL TEST TO DEMONSTRATE TO THE CONSTRUCTION MANAGER THAT THE NEW INSTALLATION IS OPERATING AS INTENDED. ANY DEFECTS OR DEFICIENCIES IN THE MATERIALS OR INSTALLATION WORK SHALL BE CORRECTED IMMEDIATELY BY AND AT THE CONTRACTOR'S EXPENSE.
4. THE CONTRACTOR SHALL RESTORE, I.E. REPAIR, PATCH AND PAINT ALL AREAS WHERE THE FIRE ALARM AND ASSOCIATED DEVICES ARE REMOVED OR OTHERWISE AFFECTED BY EITHER THE DEMOLITION OF THE EXISTING EQUIPMENT OR THE REINSTALLATION OF THE EXISTING EQUIPMENT, TO MATCH THE EXISTING AND EXISTING ADJACENT AREAS AFFECTED.
5. NO SPLICES SHALL BE ALLOWED IN ANY FIRE ALARM CONDUCTOR.
6. SEE DRAWING G006 FOR A GENERAL DESCRIPTION OF EACH BID OPTION.

KEY NOTES

1. DISCONNECT AND REMOVE EXISTING SMOKE DETECTOR HEAD AS INDICATED. IDENTIFY WIRING AND PROTECT FROM DAMAGE FOR RECONNECTION IN THE NEW CONSTRUCTION.
2. DISCONNECT AND REMOVE EXISTING HEAT DETECTOR HEAD AND BASE AND ALL ASSOCIATED CONDUITS AND WIRING CLEAR FROM AREA OF DEMOLITION. TAPE/TAG AND IDENTIFY WIRING FOR RECONNECTION IN NEW WORK.
3. REINSTALL EXISTING FIRE ALARM SMOKE DETECTOR TO ORIGINAL LOCATION AND RESTORE ORIGINAL SIGNALING LINE CIRCUIT. REPROGRAMMING AND TESTING OF (E) FIRE ALARM CONTROL PANEL SHALL BE DONE BY THE GOVERNMENT.
4. INSTALL RELOCATED HEAT DETECTOR AS INDICATED. RECONNECT AND USE EXISTING CIRCUIT WIRING AND PROVIDE FIRE ALARM CONDUCTORS TO MATCH EXISTING AS NEEDED.
5. EXISTING FIRE ALARM CONTROL PANEL, PYROTRONICS (MODEL FIU-6) TO REMAIN.

LEGEND:

- (?) X — SMOKE DETECTOR CEILING MOUNTED. SUBSCRIPT X DENOTES CIRCUIT OR ADDRESS NUMBER.
- (H) X — HEAT DETECTOR CEILING MOUNTED. SUBSCRIPT X DENOTES CIRCUIT OR ADDRESS NUMBER.

ZONE	LETTER	DESCRIPTION	DRAWN	DATE	APPRVD

REVISIONS

DRAWN H. FORTEZA	DATE
DESIGNED H. FORTEZA	DATE
CHECKED J.McCUSKER	DATE
A&E PM G.HITE	DATE
NASA PM W.LEE	DATE
REQUESTER G.RAUCHE	DATE
R&QA -	DATE
SAFETY/PSM	DATE
SUPERVISOR S.FRANKEL	DATE

REGISTERED PROFESSIONAL ENGINEER REDERICK M. JONES No. E14616 ELECTRICAL STATE OF CALIFORNIA

Ames Research Center
Moffett Field, California

REPLACE ARC JET COMPLEX SVS BOILER
ELECTRICAL
OFFICE
FIRE ALARM PLAN
DEMOLITION AND NEW WORK

SIZE	CAGE CODE		REV
D	25307	A 231-1300-E210	
SCALE 1/4"=1'-0"		INDEX	SHEET OF

FILE NAME: 231-E210.DWG 12/12/12

1/4"=1' 0 2 4 8 12

DWG: R:\234A\60212932.0001 (K11027) Replace ArcJect Complex SVS Boiler Final Design\500 CAD\E\Sheet\231-E210.dwg Version: 17.1s (LMS Tech) User: wbonaldi
DATE: Jan 28, 2013 - 1:29:27 pm

DWG NO.	SH.	REV
A231-1300-E211		

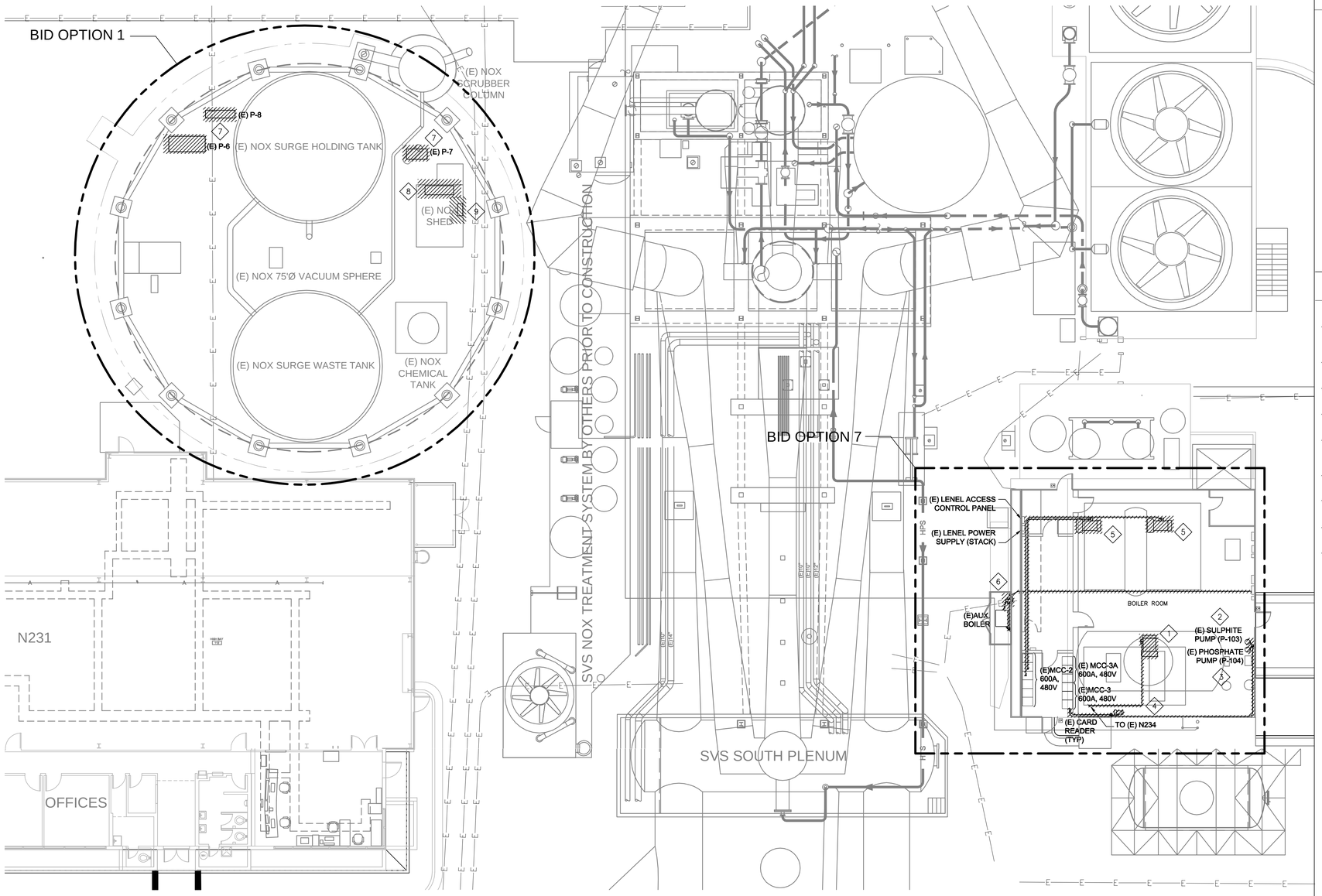

1 N234A DEMOLITION PLAN
E101 E211 SCALE: 3/32" = 1"-0"

N

3/32"=1' 0 8 16 32 48

SHEET NOTES

1. HATCH LINES INDICATE (E) ELECTRICAL ITEMS TO BE DISCONNECTED AND REMOVED, UNLESS OTHERWISE NOTED.
2. SEE DRAWING G006 FOR A GENERAL DESCRIPTION OF EACH BID OPTION.

KEY NOTES

1. DISCONNECT AND DEMOLISH EXISTING BOILER FEEDWATER PUMP AND MOTOR (P101) AND ALL ASSOCIATED WIRES AND CONDUIT BACK TO SWITCHGEAR LOCATED AT N234. ABANDON UNDERGROUND CONDUIT AND CAP AT BOTH END.
2. DISCONNECT AND DEMOLISH EXISTING SULPHITE PUMP AND MOTOR (P103) AND ALL ASSOCIATED WIRES AND CONDUIT BACK TO MCC-3 LOCATED AT N234A.
3. DISCONNECT AND DEMOLISH EXISTING PHOSPHATE PUMP AND MOTOR (P104) AND ALL ASSOCIATED WIRES AND CONDUIT BACK TO MCC-3 LOCATED AT N234A.
4. DISCONNECT AND DEMOLISH EXISTING CIRCULATING PUMP AND MOTOR (P105) AND ALL ASSOCIATED WIRES AND CONDUIT BACK TO MCC-3 LOCATED AT N234A.
5. DISCONNECT AND DEMOLISH EXISTING FORCED AIR FANS AND MOTORS (F101) AND (F102) LOCATED AT APPROXIMATELY 18 FEET ABOVE FINISHED FLOOR AND ALL ASSOCIATED WIRES AND CONDUIT BACK TO MCC-2 LOCATED AT N234A.
6. DISCONNECT AND DEMOLISH 120V POWER FOR AUXILIARY BOILER AND ALL ASSOCIATED WIRES AND CONDUIT BACK TO SOURCE PANEL H.
7. DISCONNECT AND DEMOLISH (E) PUMP MOTORS P6, P7 AND P8 AND ALL ASSOCIATED WIRES BACK TO DISCONNECT SWITCHES IN (E) NOX SHED.
8. DISCONNECT AND DEMOLISH (E) DISCONNECT SWITCHES IN (E) NOX SHED AND ALL ASSOCIATED WIRES BACK TO MCC-3A IN N234A.
9. DISCONNECT AND DEMOLISH (E) PANELBOARD IN (E) NOX SHED AND ALL ASSOCIATED WIRES BACK TO SOURCE IN N234A.

ZONE	LETTER	DESCRIPTION	DRAWN	DATE	APPRVD

REVISIONS

DRAWN H. FORTEZA	DATE	
DESIGNED H. FORTEZA	DATE	
CHECKED J.McCUSKER	DATE	
A&E PM G.HITE	DATE	
NASA PM W.LEE	DATE	
REQUESTER G.RAICHE	DATE	
R&QA -	DATE	
SAFETY/PSM	DATE	
SUPERVISOR S.FRANKEL	DATE	

REGISTERED PROFESSIONAL ENGINEER FREDERICK M. JONES No. E14616 ELECTRICAL STATE OF CALIFORNIA

Ames Research Center
Moffett Field, California

REPLACE ARC JET COMPLEX SVS BOILER
ELECTRICAL

N234A DEMOLITION PLAN

SIZE	CAGE CODE		REV
D	25307	A 231-1300-E211	
SCALE 3/32"=1'-0"		INDEX	SHEET OF

FILE NAME: 231-E211.DWG 12/12/12

DWG: P:\234A\60212932\0001 (K11027) Replace ArcJect Complex SVS Boiler Final Design\500 CAD\ES\Sheet\231-E211.dwg Version: 17.1s (LMS Tech) User: vbonaldi
DATE: Jan 28, 2013 - 1:48:43 pm

DWG NO.	SH.	REV
A231-1300-E212		

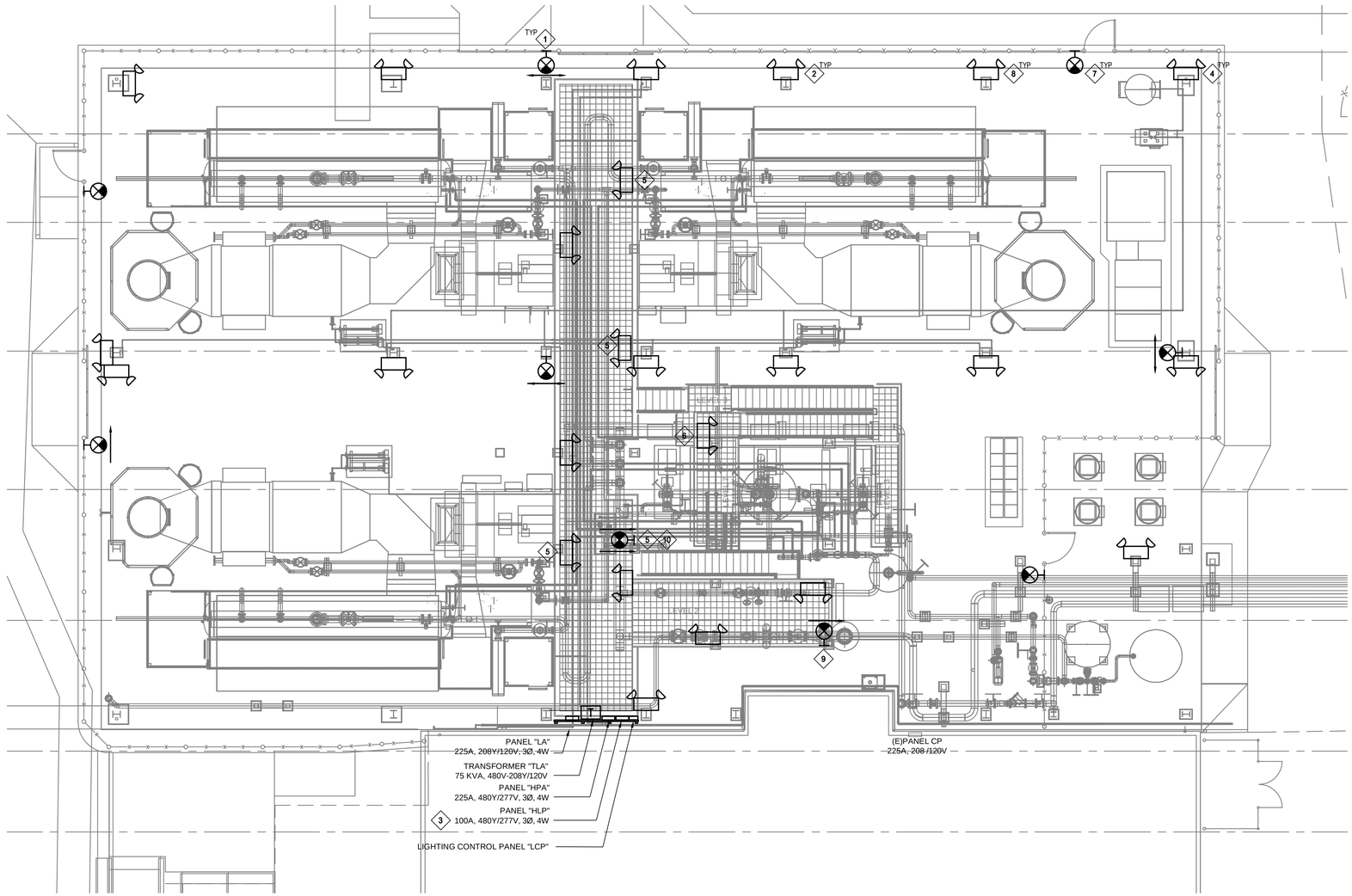

1 BOILER AREA EMERGENCY LIGHTING
E101 E201 SCALE: 1/8"=1'-0"

N

1/8"=1' 0 4 8 16 24

SHEET NOTES

KEY NOTES

1. PROVIDE LIGHTED EXIT SIGN DUAL VOLTAGE INPUT 120/277 V, W/ MAINTENANCE FREE 90-MINUTE BATTERY, REGULATED CHARGER, AUTO RECHARGE AFTER DISCHARGE FEATURE, LONG-LIFE LED LAMPS, GREEN LETTERS, SINGLE FACE W/ DOUBLE FACE CAPABILITY,CLEAR POLYCARBONATE SHIELD,SELF-DIAGNOSTICS, TEST SWITCH, STATUS INDICATOR, UL-LISTED. BLACK DIE-CAST ALUMINUM HOUSING SUITABLE FOR OUTDOOR WET LOCATIONS. SIMILAR TO COOPER LIGHTING #UX7000GBKSD.
2. PROVIDE EMERGENCY LIGHT UNIT , DUAL-VOLTAGE INPUT 120/277 V, W/ MAINTENANCE FREE 90-MINUTE BATTERY, REGULATED CHARGER, AUTO RECHARGE AFTER DISCHARGE FEATURE, 2-6W XENON LAMPS,SELF-DIAGNOSTICS, TEST SWITCH, STATUS INDICATOR, UL-LISTED, DARK BRONZE DIE-CAST ALUMINUM HOUSING SUITABLE FOR OUTDOOR WET LOCATIONS. SIMILAR TO LITHONIA LIGHTING #AFN-DB-EXT.
3. ALL EMERGENCY LIGHTING AND EXIT SIGNS SHALL BE FED FROM PANEL HLP CIRCUIT 6, IN ¾"C WITH 2 #12 AWG & #12G WIRES. SEE DWG E603.
4. INSTALL ALL DEVICES ON LEVEL 1 U.N.O. IN KEY NOTES 5 AND 6. SEE DWG A105.
5. INSTALL ON LEVEL 2. SEE DWG A105.
6. INSTALL ON LEVEL 7. SEE DWG A105.
7. INSTALL EXIT SIGNS ON THE TOP RAIL OF THE FIXED PORTION OF THE PERIMETER FENCE.
8. INSTALL EMERGENCY LIGHTING FIXTURES ON COLUMNS AT 8.5-FT AFF.
9. INSTALL EXIT SIGN ON COLUMN FACING STAIRS AT 8-FT AFF. ADJUST HEIGHT AS NECESSARY TO MAKE IT VISIBLE TO A PERSON ON THE BOTTOM STEP.
10. DOUBLE FACE.

ZONE	LETTER	DESCRIPTION	DRAWN	DATE	APPRVD

REVISIONS

DRAWN H. FORTEZA	DATE
DESIGNED H. FORTEZA	DATE
CHECKED J.McCUSKER	DATE
A&E PM G.HITE	DATE
NASA PM W.LEE	DATE
REQUESTER G.RAICHE	DATE
R&QA -	DATE
SAFETY/PSM	DATE
SUPERVISOR S.FRANKEL	DATE

REGISTERED PROFESSIONAL ENGINEER FREDERICK M. JONES No. E14616 ELECTRICAL STATE OF CALIFORNIA

Ames Research Center
Moffett Field, California

REPLACE ARC JET COMPLEX SVS BOILER
ELECTRICAL

BOILER AREA EMERGENCY LIGHTING

SIZE	CAGE CODE		REV
D	25307	A 231-1300-E212	
SCALE 1/8"=1'-0"		INDEX	SHEET OF

FILE NAME: 231-E212.DWG 12/12/12

DWG: R:\234N\60212932.0001 (K11027) Replace ArcJect Complex SVS Boiler Final Design\500 CADIE\Sheet\231-E212.dwg Version: 17.1s (LMS Tech) User: wdonaldi
DATE: Jan 28, 2013 - 1:18:11 pm

DWG NO.	SH.	REV
A231-1300-E301		

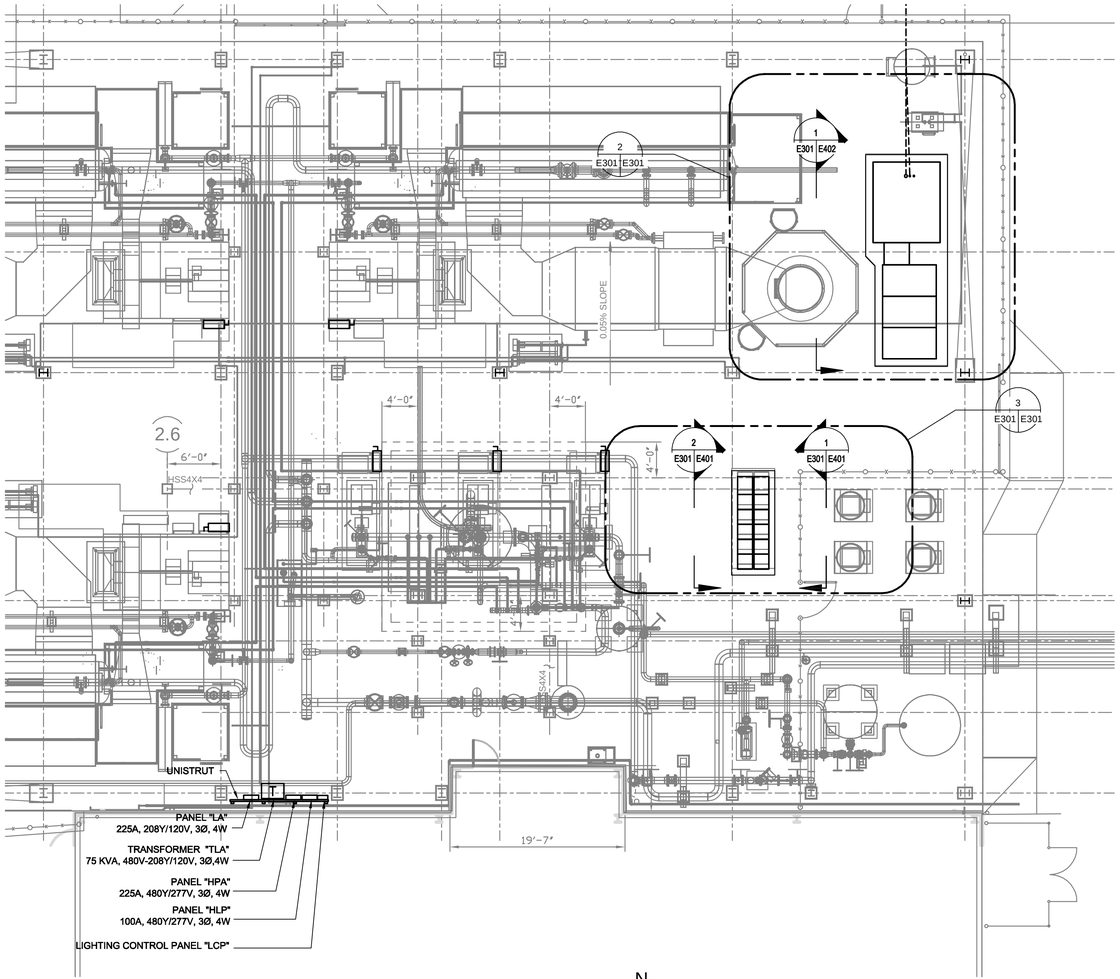

1 EQUIPMENT PLAN
E101 E301 SCALE: 1/8"=1'-0"

N

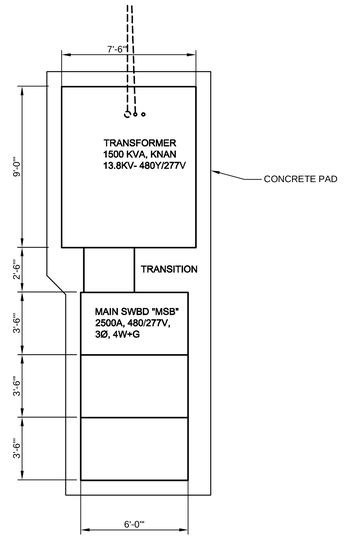

2 ENLARGED EQUIPMENT PLAN
E301 E301 SCALE: 1/4"=1'-0"

N

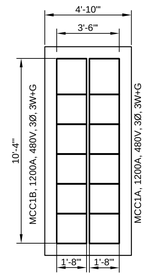

3 ENLARGED EQUIPMENT PLAN
E301 E301 SCALE: 1/4"=1'-0"

N

SHEET NOTES

1. ALL DISCONNECT SWITCHES ARE NEMA 3R AND SHALL BE UNISTRUT MOUNTED ADJACENT TO MOTOR AND NEAR HARDWIRE CONNECTION.

KEY NOTES

ZONE	LETTER	DESCRIPTION	DRAWN	DATE	APPRVD

REVISIONS

DRAWN H. FORTEZA	DATE	
DESIGNED H. FORTEZA	DATE	
CHECKED J.McCUSKER	DATE	
A&E PM G.HITE	DATE	
NASA PM W.LEE	DATE	
REQUESTER G.RAICHE	DATE	
R&QA	DATE	
SAFETY/PSM	DATE	
SUPERVISOR S.FRANKEL	DATE	

1/4"=1' 0 2 4 8 12

1/8"=1' 0 4 8 16 24

REGISTERED PROFESSIONAL ENGINEER FREDERICK M. JONES No. E14616 ELECTRICAL STATE OF CALIFORNIA

Ames Research Center
Moffett Field, California

REPLACE ARC JET COMPLEX SVS BOILER
ELECTRICAL
ENLARGED
EQUIPMENT PLAN

SIZE	CAGE CODE		REV
D	25307	A 231-1300-E301	
SCALE AS NOTED		INDEX	SHEET OF

FILE NAME:
231-E301.DWG 12/12/12

DWG: R:\234\N\0212932.0001 (K11027) Replace Arc-Ject Complex SVS Boiler Final Design\500 CAD\E\Sheet\231-E301.dwg Version: 17.1s (LMS Tech) User: wbonaldi
DATE: Jan 28, 2013 - 14:52 pm

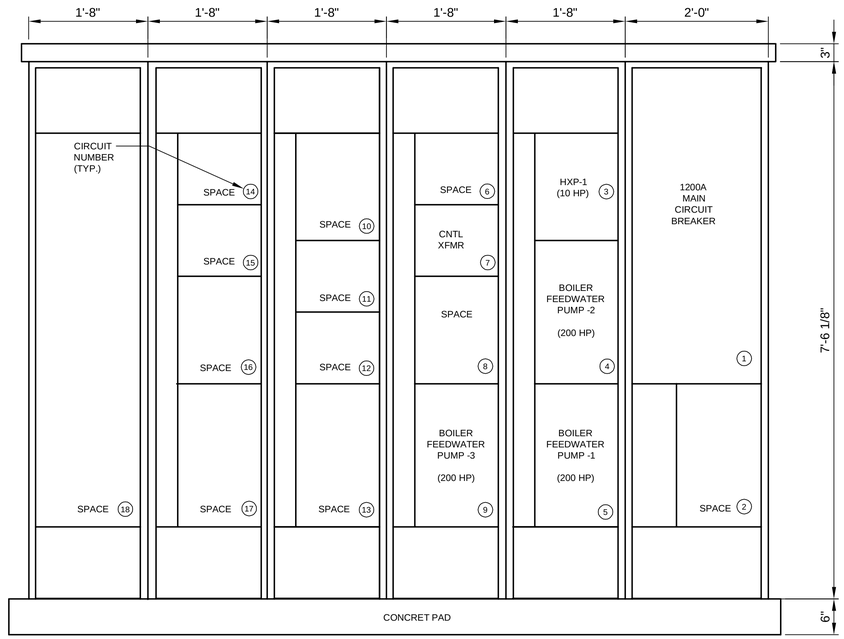

1 MCC1A ELEVATION
E310 E401 SCALE: 1"=1'-0"

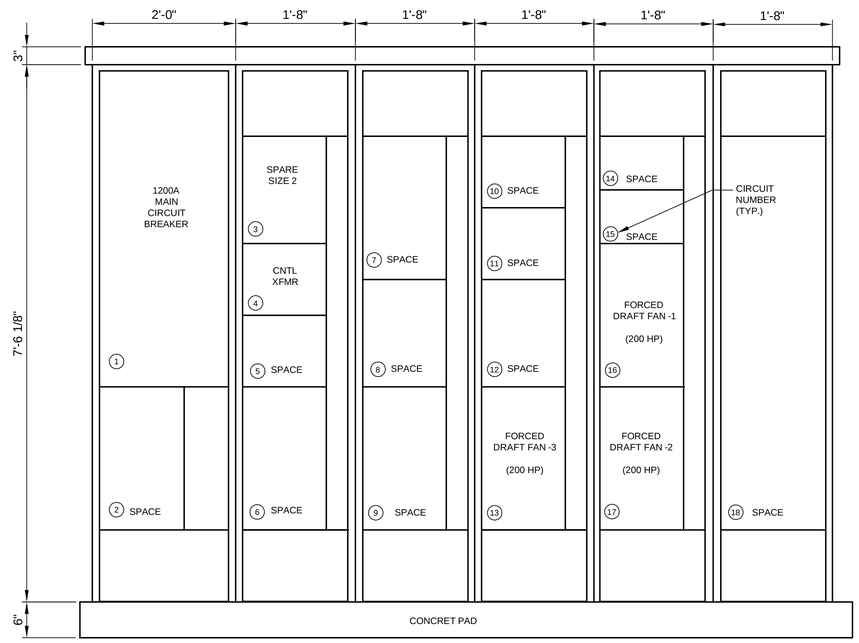

2 MCC1B ELEVATION
E301 E401 SCALE: 1"=1'-0"

SHEET NOTES

1. MANUFACTURER'S RECOMMENDATIONS FOR CONDUCTOR SIZING, CIRCUIT BREAKER OR FUSE RATING OF ELECTRICALLY OPERATED EQUIPMENT MAY DIFFER FROM THOSE INDICATED ON DRAWINGS. CONTRACTOR SHALL CONFIRM RATINGS PRIOR TO ORDERING EQUIPMENT.
2. ALL DIMENSIONAL INFORMATION SHOWN ARE TYPICAL FOR REFERENCE ONLY. CONTRACTOR TO SUBMIT SHOP DRAWINGS ON ALL WORK DEPICTED ON THIS SHEET, BASED OF FIELD CONDITIONS.

KEY NOTES

ZONE	LETTER	DESCRIPTION	DRAWN	DATE	APPRVD

REVISIONS

DRAWN H. FORTEZA	DATE
DESIGNED H. FORTEZA	DATE
CHECKED J.McCUSKER	DATE
A&E PM G.HITE	DATE
NASA PM W.LEE	DATE
REQUESTER G.RAICHE	DATE
R&QA -	DATE
SAFETY/PSM	DATE
SUPERVISOR S.FRANKEL	DATE

REGISTERED PROFESSIONAL ENGINEER REDERICK M. JONES No. E14616 ELECTRICAL STATE OF CALIFORNIA

Ames Research Center
Moffett Field, California

REPLACE ARC JET COMPLEX SVS BOILER
ELECTRICAL
MCC1A AND MCC1B ELEVATION

SIZE	CAGE CODE	
D	25307	A 231-1300-E401 REV
SCALE AS NOTED	INDEX	SHEET OF

FILE NAME: 231-E401.DWG 12/12/12

DWG: R:\234A60212932.0001(K11027) Replace ArcJect Complex SVS Boiler Final Design\500 CAD\ES\Sheet\231-E401.dwg Version: 17.1s (LMS Tech) User: wbonaldi
DATE: Jan 28, 2013 - 1:41:40 pm

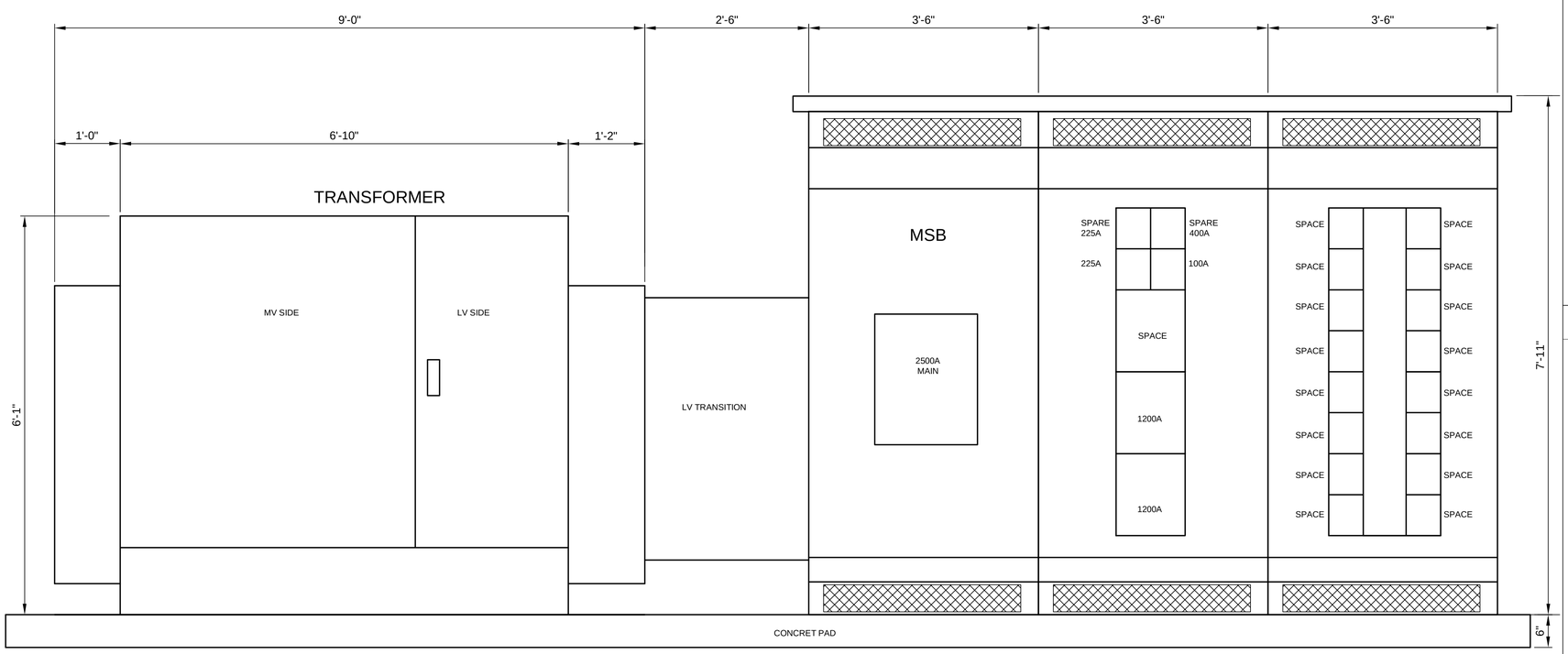

1 TRANSFORMER AND SWITCHGEAR ELEVATION
E301 E402 SCALE: 1"=1'-0"

SHEET NOTES

1. MANUFACTURER'S RECOMMENDATIONS FOR CONDUCTOR SIZING, CIRCUIT BREAKER OR FUSE RATING OF ELECTRICALLY OPERATED EQUIPMENT MAY DIFFER FROM THOSE INDICATED ON DRAWINGS. CONTRACTOR SHALL CONFIRM RATINGS PRIOR TO ORDERING EQUIPMENT.
2. ALL DIMENSIONAL INFORMATION SHOWN ARE TYPICAL FOR REFERENCE ONLY. CONTRACTOR TO SUBMIT SHOP DRAWINGS ON ALL WORK DEPICTED ON THIS SHEET, BASED OF FIELD CONDITIONS.

KEY NOTES

ZONE	LETTER	DESCRIPTION	DRAWN	DATE	APPRVD

REVISIONS

REGISTERED PROFESSIONAL ENGINEER FREDERICK M. JONES No. E14616 ELECTRICAL STATE OF CALIFORNIA

DRAWN H. FORTEZA	DATE
DESIGNED H. FORTEZA	DATE
CHECKED J.McCUSKER	DATE
A&E PM G.HITE	DATE
NASA PM W.LEE	DATE
REQUESTER G.RAICHE	DATE
R&QA	DATE
SAFETY/PSM	DATE
SUPERVISOR S.FRANKEL	DATE

Ames Research Center
Moffett Field, California

REPLACE ARC JET COMPLEX SVS BOILER
ELECTRICAL
TRANSFORMER AND SWITCHGEAR ELEVATION

SIZE	CAGE CODE		REV
D	25307	231-1300-E402	
SCALE AS NOTED		INDEX	SHEET OF

FILE NAME: 231-E402.DWG 12/12/12

DWG: R:\234A\60212932.0001(K11027) Replace ArcJect Complex SVS Boiler Final Design\500 CAD\ES\Sheet\231-E402.dwg Version: 17.1s (LMS Tech) User: wbonaldi
DATE: Jan 28, 2013 - 14:27 pm

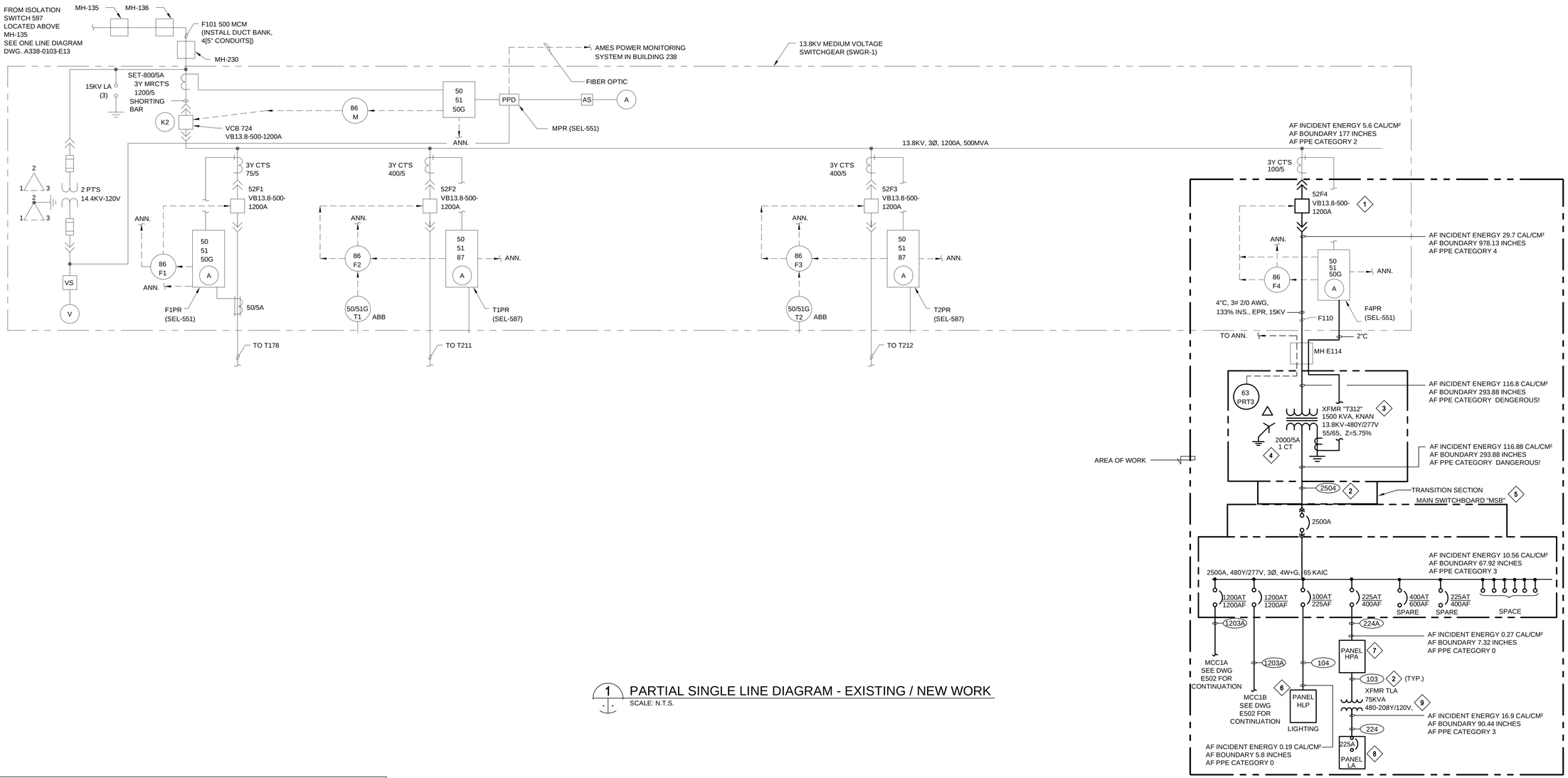

1 PARTIAL SINGLE LINE DIAGRAM - EXISTING / NEW WORK
SCALE: N.T.S.

KEY NOTES

1. PROVIDE SQUARE "D" TYPE VR VACUUM CIRCUIT BREAKER IN EXISTING SWITCHGEAR-1, 13.8 KV, 500 MVA, 1200A, 95 KV BIL TO MATCH EXISTING TYPE AND RATING.
2. SEE E601 FOR FEEDER SIZE.
3. PROVIDE LESS-FLAMMABLE LIQUID-INSULATED TRANSFORMER, 13,800 - 480Y/277 V, 1500 KVA, KNAN, 55°/65°C, Z=5.75%, WITH FOUR 2.5% FULL CAPACITY TAPS, TWO ABOVE AND TWO BELOW RATED PRIMARY VOLTAGE, 95 KV BIL.
4. PROVIDE CURRENT TRANSFORMER 2000/5 A, 600 V, 10 KV BIL, RATING FACTOR 2.0 AT 30°C ON THE TRANSFORMER T312 SECONDARY NEUTRAL. MOUNT CT IN THE TRANSFORMER SECONDARY COMPARTMENT. PROVIDE GLASTIC MOUNTING BRACKET TO SUPPORT CT.
5. PROVIDE MAIN SWITCHBOARD IN ACCORDANCE WITH SPECIFICATION SECTION 26 23 00.00 40. SEE DRAWING E402 FOR DETAILS.
6. PROVIDE PANELBOARD HLP, 480Y/277V, 100A, IN NEMA 3R ENCLOSURE IN ACCORDANCE WITH SPECIFICATION SECTION 26 24 16.00 40. SEE DRAWING E603 FOR PANEL SCHEDULE.
7. PROVIDE PANELBOARD HPA, 480Y/277V, 225A, IN NEMA 3R ENCLOSURE IN ACCORDANCE WITH SPECIFICATION SECTION 26 24 16.00 40. SEE DRAWING E603 FOR PANEL SCHEDULE.
8. PROVIDE PANELBOARD LA, 208Y/120V, 225A, IN NEMA 3R ENCLOSURE IN ACCORDANCE WITH SPECIFICATION SECTION 26 24 16.00 40. SEE DRAWING E603 FOR PANEL SCHEDULE.
9. PROVIDE DRY TYPE TRANSFORMER TLA, 75 KVA, 480V, 208Y/120V IN NEMA 3R ENCLOSURE.

ZONE	LETTER	DESCRIPTION	DRAWN	DATE	APPRVD
		REVISIONS			

DRAWN H. FORTEZA	DATE
DESIGNED H. FORTEZA	DATE
CHECKED J.McCUSKER	DATE
A&E PM G.HITE	DATE
NASA PM W.LEE	DATE
REQUESTER G.RAICHE	DATE
R&QA	DATE
SAFETY/PSM	DATE
SUPERVISOR S.FRANKEL	DATE

REGISTERED PROFESSIONAL ENGINEER FREDERICK M. JONES No. E14616 ELECTRICAL STATE OF CALIFORNIA

Ames Research Center
Moffett Field, California

REPLACE ARC JET COMPLEX SVS BOILER
ELECTRICAL

PARTIAL SINGLE LINE DIAGRAM
EXISTING / NEW WORK

SIZE	CAGE CODE		REV
D	25307	231-1300-E501	A
SCALE AS NOTED		INDEX	SHEET OF

FILE NAME: 231-E501.DWG 12/12/12

DWG: P:\234A\60212932.0001 (K11027) Replace Arc Jet Complex SVS Boiler Final Design\500 CAD\ElSheet\231-E501.dwg Version: 17.1s (LMS Tech) User: vbonaldi
DATE: Jan 28, 2013 - 14:09 pm

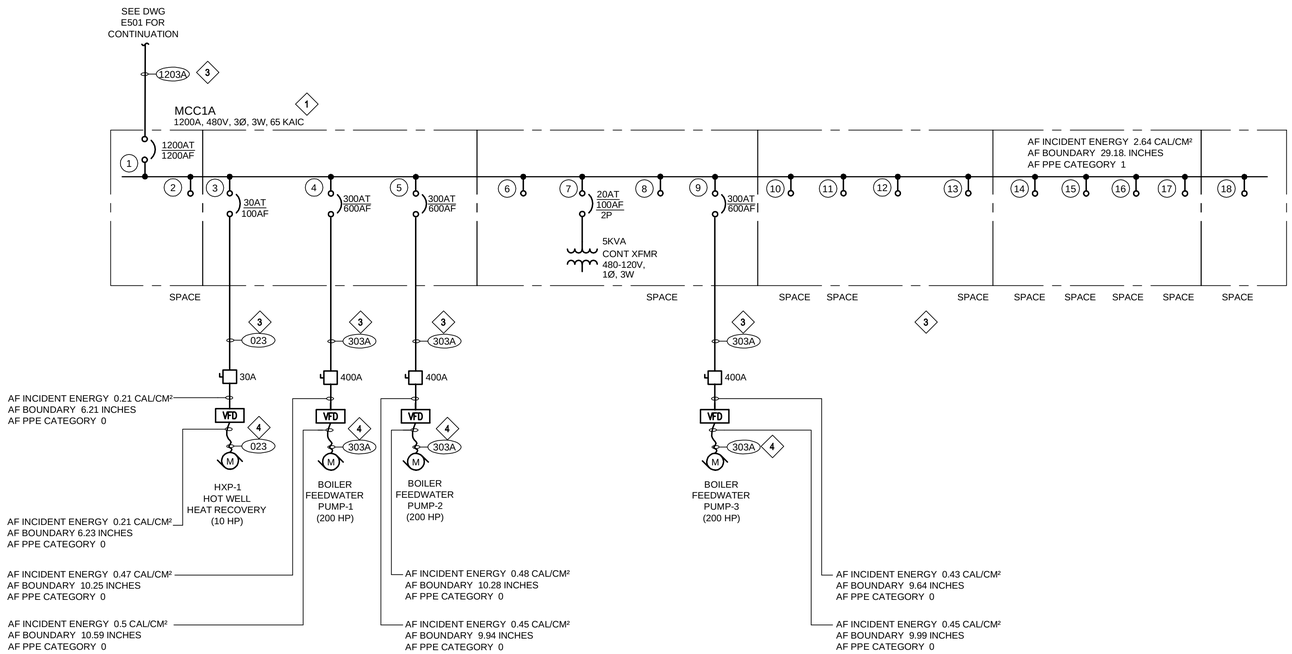

1 SINGLE LINE DIAGRAM - MCC1A
SCALE: N.T.S.

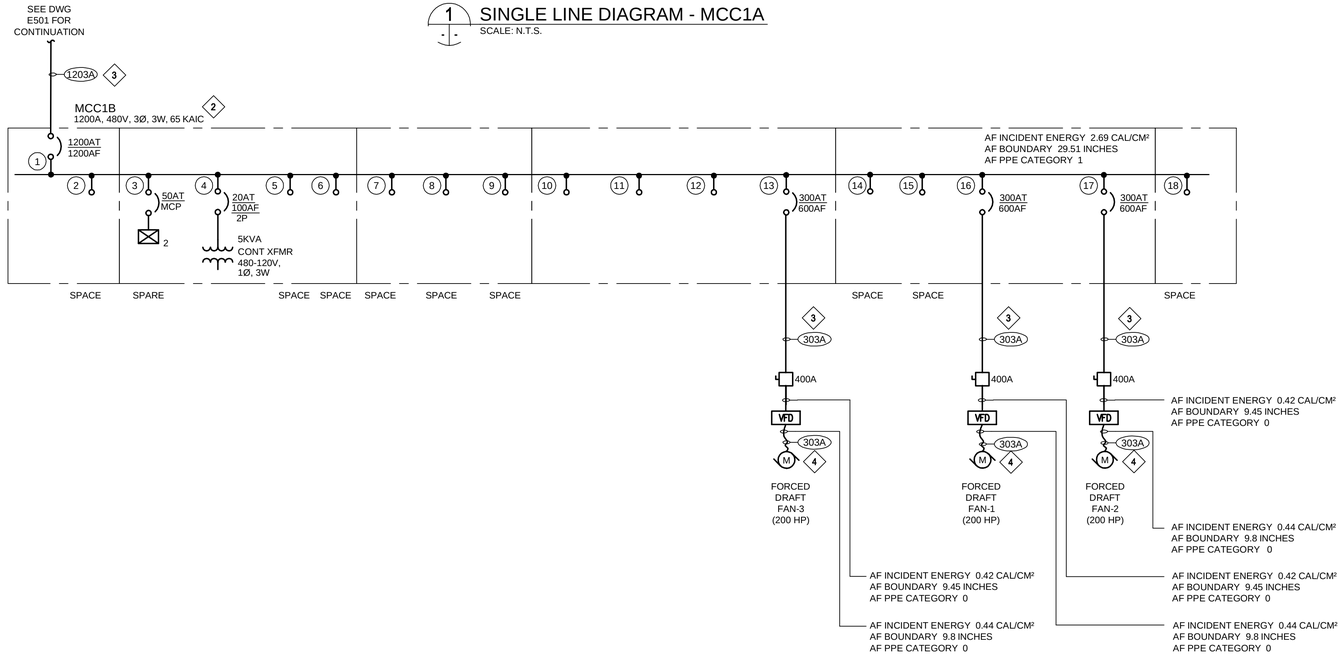

2 SINGLE LINE DIAGRAM - MCC1B
SCALE: N.T.S.

SHEET NOTES

1. CONNECTIONS TO MECHANICAL EQUIPMENT SHALL BE IN LIQUIDTIGHT FLEXIBLE METAL CONDUIT, UON.
2. MANUFACTURER'S RECOMMENDATIONS FOR CONDUCTOR SIZING, CIRCUIT BREAKER OR FUSE RATING OF ELECTRICALLY OPERATED EQUIPMENT MAY DIFFER FROM THOSE INDICATED ON DRAWINGS. CONTRACTOR SHALL CONFIRM RATINGS PRIOR TO ORDERING EQUIPMENT.

KEY NOTES

1. PROVIDE MOTOR CONTROL CENTER MCC1A IN ACCORDANCE WITH SPECIFICATION SECTION 26 24 19.00 40 AND THIS DRAWING. SEE DRAWING E401 FOR DETAILS.
2. PROVIDE MOTOR CONTROL CENTER MCC1B IN ACCORDANCE WITH SPECIFICATION SECTION 26 24 19.00 40 AND THIS DRAWING. SEE DRAWING E401 FOR DETAILS.
3. REFER TO DRAWING E601 FOR FEEDER SIZE.
4. USE LIQUIDTIGHT FLEXIBLE CONDUIT BETWEEN VFD AND MOTOR. REFER TO DRAWING E601 FOR FEEDER SIZE.

ZONE	LETTER	DESCRIPTION	DRAWN	DATE	APPRVD

REVISIONS

REGISTERED PROFESSIONAL ENGINEER FREDERICK M. JONES No. E14616 ELECTRICAL STATE OF CALIFORNIA

DRAWN H. FORTEZA	DATE
DESIGNED H. FORTEZA	DATE
CHECKED J.McCUSKER	DATE
A&E PM G.HITE	DATE
NASA PM W.LEE	DATE
REQUESTER G.RAICHE	DATE
R&QA -	DATE
SAFETY/PSM	DATE
SUPERVISOR S.FRANKEL	DATE

Ames Research Center
Moffett Field, California

REPLACE ARC JET COMPLEX SVS BOILER
ELECTRICAL

SINGLE LINE DIAGRAM - MCC

SIZE	CAGE CODE		REV
D	25307	231-1300-E502	
SCALE AS NOTED		INDEX	SHEET OF

FILE NAME: 231-E502.DWG 12/12/12

DWG: R:\234A\60212932.0001 (K11027) Replace ArcJect Complex SVS Boiler Final Design\500 CAD\ES\Sheet\231-E502.dwg Version: 17.1s (LMS Tech) User: wdonaldi
DATE: Jan 28, 2013 - 1:40:55 pm

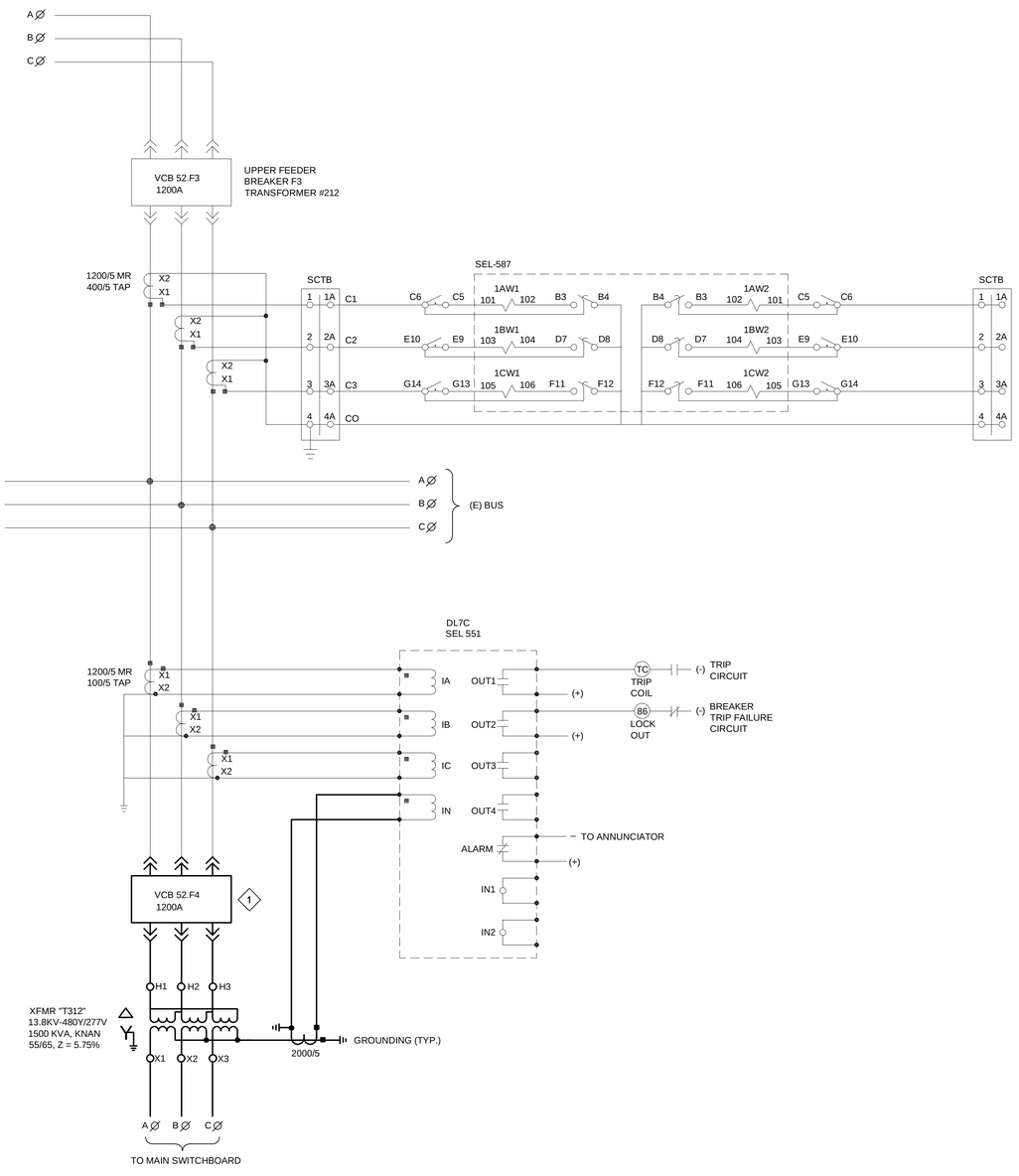

1 PARTIAL THREE LINE DIAGRAM
SCALE: N.T.S.

SHEET NOTES

1. THE DIAGRAM ARE PROVIDED FOR GUIDANCE ONLY. THE CONTRACTOR SHALL FIELD VERIFY ALL EXISTING EQUIPMENT INCLUDING TERMINAL BLOCKS. TERMINAL IDENTIFICATION NUMBER, CONNECTIONS, ETC., AND REVISE DRAWING AS NEEDED TO MATCH EXISTING AND NEW EQUIPMENT TO PROVIDE A COMPLETE FUNCTIONAL SYSTEM.
2. ALL CT WIRES SHALL BE #10 AWG, MINIMUM AND VT WIRES SHALL BE #12 AWG, MINIMUM UNLESS OTHERWISE NOTED.
3. NO SPLICES SHALL BE ALLOWED IN ANY CONDUCTOR.

KEY NOTES

1. PROVIDE SQUARE "D" TYPE VR VACUUM CIRCUIT BREAKER IN EXISTING SWITCHGEAR-1, 13.8 KV, 500 MVA, 1200A, 95 KV BIL TO MATCH EXISTING TYPE AND RATING.

ZONE	LETTER	DESCRIPTION	DRAWN	DATE	APPRVD

REVISIONS

DRAWN H. FORTEZA	DATE
DESIGNED H. FORTEZA	DATE
CHECKED J.McCUSKER	DATE
A&E PM G.HITE	DATE
NASA PM W.LEE	DATE
REQUESTER G.RAICHE	DATE
R&QA -	DATE
SAFETY/PSM	DATE
SUPERVISOR S.FRANKEL	DATE

REGISTERED PROFESSIONAL ENGINEER FREDERICK M. JONES No. E14616 ELECTRICAL STATE OF CALIFORNIA

Ames Research Center
Moffett Field, California

REPLACE ARC JET COMPLEX SVS BOILER
ELECTRICAL

PARTIAL THREE LINE DIAGRAM

SIZE	CAGE CODE		REV
D	25307	A 231-1300-E503	
SCALE AS NOTED		INDEX	SHEET OF

FILE NAME: 231-E503.DWG 12/12/12

DWG: R:\23AA\60213932.0001(K11027) Replace Arc Jet Complex SVS Boiler Final Design\500 CAD\E\Sheet\231-E503.dwg Version: 17.1s (LMS Tech) User: wbonaldi
DATE: Jan 28, 2013 - 1:32:48 pm

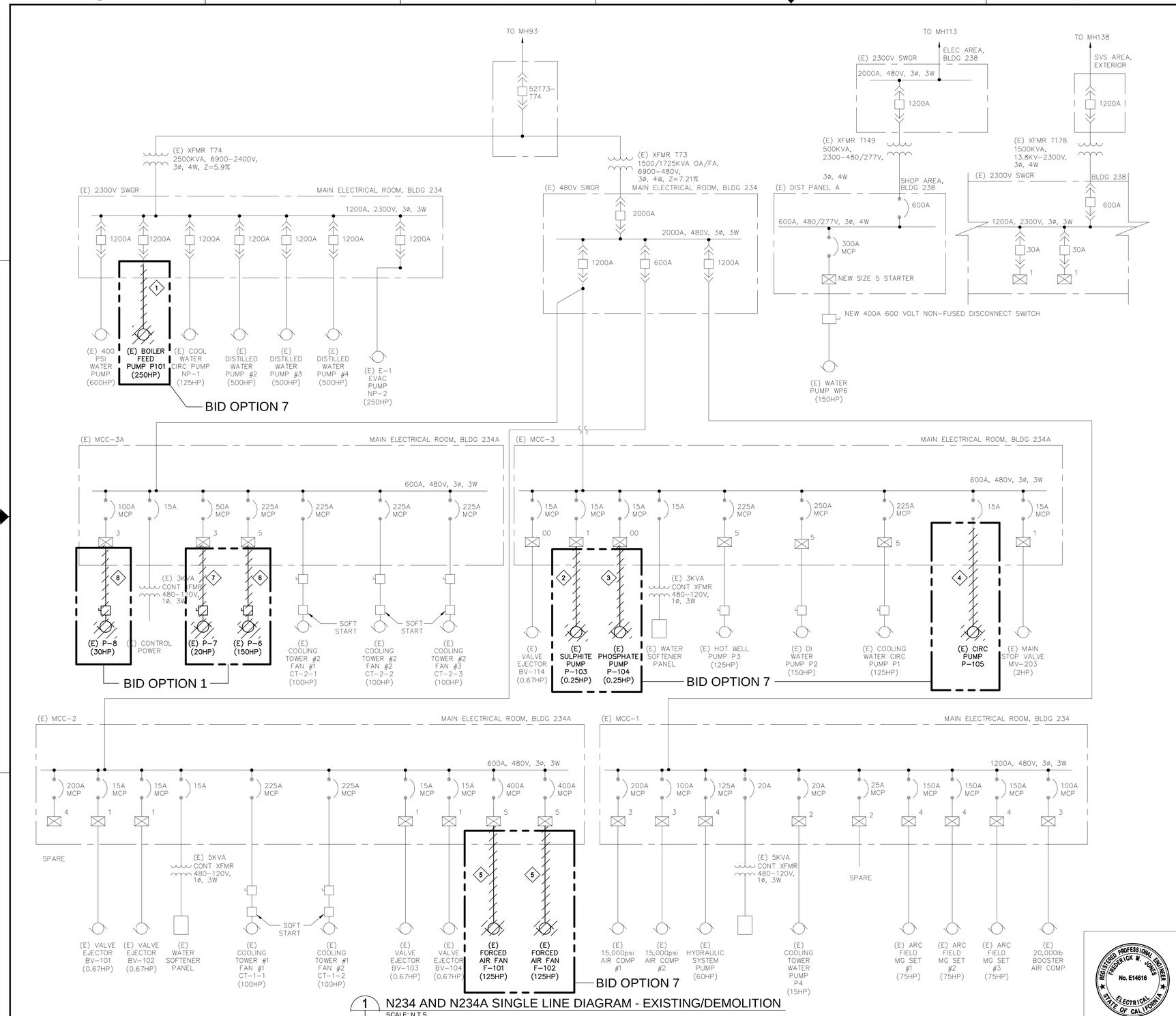

1 N234 AND N234A SINGLE LINE DIAGRAM - EXISTING/DEMOLITION
SCALE: N.T.S.

DWG NO.	SH.	REV
A231-1300-E504		

SHEET NOTES

1. HATCH LINES INDICATE (E) ELECTRICAL ITEMS TO BE DISCONNECTED AND REMOVED, UNLESS OTHERWISE NOTED.
2. SEE DRAWING G006 FOR A GENERAL DESCRIPTION OF EACH BID OPTION.

KEY NOTES

1. DISCONNECT AND DEMOLISH EXISTING BOILER FEEDWATER PUMP (P101) AND ALL ASSOCIATED WIRES AND CONDUIT BACK TO SWITCHGEAR LOCATED AT BUILDING N234. UPDATE (E) SWITCHGEAR IDENTIFICATION DIRECTORY AND LABEL THE CIRCUIT AS "SPARE".
2. DISCONNECT AND DEMOLISH EXISTING SULPHITE PUMP (P103) AND ALL ASSOCIATED WIRES AND CONDUIT BACK TO MCC-3 LOCATED AT N234A. UPDATE (E) MCC-3 IDENTIFICATION DIRECTORY AND LABEL THE CIRCUIT AS "SPARE".
3. DISCONNECT AND DEMOLISH EXISTING PHOSPHATE PUMP (P104) AND ALL ASSOCIATED WIRES AND CONDUIT BACK TO MCC-3 LOCATED AT N234A. UPDATE (E) MCC-3 IDENTIFICATION DIRECTORY AND LABEL THE CIRCUIT AS "SPARE".
4. DISCONNECT AND DEMOLISH EXISTING CIRCULATING PUMP (P105) AND ALL ASSOCIATED WIRES AND CONDUIT BACK TO MCC-3 LOCATED AT N234A. UPDATE (E) MCC-3 IDENTIFICATION DIRECTORY AND LABEL THE CIRCUIT AS "SPARE".
5. DISCONNECT AND DEMOLISH EXISTING FORCED AIR FANS (F101) AND (F102) AND ALL ASSOCIATED WIRES AND CONDUIT BACK TO MCC-2 LOCATED AT N234A. UPDATE (E) MCC-2 IDENTIFICATION DIRECTORY AND LABEL THE CIRCUIT AS "SPARE".
6. DISCONNECT AND DEMOLISH (E) PUMP MOTORS P-6, DISCONNECT SWITCH AND ALL ASSOCIATED WIRES BACK TO (E) MCC-3A IN N234A.
7. DISCONNECT AND DEMOLISH (E) PUMP MOTORS P-7, DISCONNECT SWITCH AND ALL ASSOCIATED WIRES BACK TO (E) MCC-3A IN N234A.
8. DISCONNECT AND DEMOLISH (E) PUMP MOTORS P-8, DISCONNECT SWITCH AND ALL ASSOCIATED WIRES BACK TO (E) MCC-3A IN N234A.

ZONE	LETTER	DESCRIPTION	DRAWN	DATE	APPRVD

REVISIONS

DRAWN H. FORTEZA	DATE	
DESIGNED H. FORTEZA	DATE	
CHECKED J.McCUSKER	DATE	
A&E PM G.HITE	DATE	
NASA PM W.LEE	DATE	
REQUESTER G.RAICHE	DATE	
R&QA	DATE	
SAFETY/PSM	DATE	
SUPERVISOR S.FRANKEL	DATE	

REGISTERED PROFESSIONAL ENGINEER FREDERICK M. JONES No. E14616 ELECTRICAL STATE OF CALIFORNIA

Ames Research Center
Moffett Field, California

REPLACE ARC JET COMPLEX SVS BOILER
ELECTRICAL
N234 AND N234A
SINGLE LINE DIAGRAM-
EXISTING/DEMOLITION

SIZE	CAGE CODE		REV
D	25307	231-1300-E504	
SCALE N.T.S.		INDEX	SHEET OF

FILE NAME: 231-E504.DWG 12/12/12

DWG: P:\234A\60212932.0001 (K11027) Replace ArcJect Complex SVS Boiler Final Design\500 CAD\ES\Sheet\231-E504.dwg Version: 17.1s (LMS Tech) User: vbonaldi
DATE: Jan 28, 2013 - 1:32:31 pm

FEEDER SCHEDULE
(Copper Conductors)

3 - PHASE 3 WIRES			CONDUIT SIZE (INCH)	EQUIPMENT GROUND WIRE	3 - PHASE 4 WIRES		CONDUIT SIZE (INCH)	EQUIPMENT GROUND WIRE
RATING (AMPS)	FEEDER TAG	CONDUCTOR			FEEDER TAG	CONDUCTOR		
20	023	3#12 AWG	3/4"C	#12 AWG	024	4#12 AWG	3/4"C	#12 AWG
30	033	3#10 AWG	3/4"C	#10 AWG	034	4#10 AWG	3/4"C	#10 AWG
40	043	3#8 AWG	3/4"C	#10 AWG	044	4#8 AWG	3/4"C	#10 AWG
50	053	3#6 AWG	3/4"C	#10 AWG	054	4#6 AWG	1"C	#10 AWG
60	063	3#4 AWG	1"C	#10 AWG	064	4#4 AWG	1 1/4"C	#10 AWG
70	073	3#4 AWG	1"C	#8 AWG	074	4#4 AWG	1 1/4"C	#8 AWG
90	093	3#2 AWG	1 1/4"C	#8 AWG	094	4#2 AWG	1 1/4"C	#8 AWG
100	103	3#1 AWG	1 1/4"C	#8 AWG	104	4#1 AWG	1 1/2"C	#8 AWG
125	123	3#1/0 AWG	1 1/2"C	#6 AWG	124	4#1/0 AWG	1 1/2"C	#6 AWG
150	153	3#1/0 AWG	1 1/2"C	#6 AWG	154	4#1/0 AWG	1 1/2"C	#6 AWG
175	173	3#2/0 AWG	1 1/2"C	#6 AWG	174	4#2/0 AWG	2"C	#6 AWG
200	203	3#3/0 AWG	2"C	#6 AWG	204	4#3/0 AWG	2"C	#6 AWG
225	223	3#4/0 AWG	2"C	#4 AWG	224	4#4/0 AWG	2 1/2"C	#4 AWG
225	223A	3#250 KcMIL	2 1/2"C	#4 AWG	224A	4#250 KcMIL	3"C	#4 AWG
250	253	3#250 KcMIL	2 1/2"C	#4 AWG	254	4#250 KcMIL	3"C	#4 AWG
300	303	3#350 KcMIL	2 1/2"C	#4 AWG	304	4#350 KcMIL	3"C	#4 AWG
300	303A	3#400 KcMIL	3"C	#4 AWG	304A	4#400 KcMIL	3"C	#4 AWG
350	353	3#500 KcMIL	3"C	#3 AWG	354	4#500 KcMIL	4"C	#3 AWG
400	403	3#600 KcMIL	4"C	#3 AWG	404	3#600 KcMIL	4"C	#3 AWG
450	453	6#4/0 AWG	3"C	#2 AWG	454	(2) 4#4/0 AWG	(2) 2 1/2"C	#2 AWG
500	503	6#250 KcMIL	4"C	#2 AWG	504	(2) 4#250 KcMIL	(2) 3"C	#2 AWG
600	603	(2) 3#350 KcMIL	(2) 2 1/2"C	#1 AWG	604	(2) 4#350 KcMIL	(2) 3"C	#1 AWG
700	703	(2) 3#500 KcMIL	(2) 3"C	#1/0 AWG	704	(2) 4#500 KcMIL	(2) 4"C	#1/0 AWG
800	803	(2) 3#600 KcMIL	(2) 4"C	#1/0 AWG	804	(2) 4#600 KcMIL	(2) 4"C	#1/0 AWG
1000	1003	(3) 3#400 KcMIL	(3) 3"C	#2/0 AWG	1004	(3) 4#400 KcMIL	(3) 3"C	#2/0 AWG
1200	1203	(3) 3#600 KcMIL	(3) 4"C	#3/0 AWG	1204	(3) 4#600 KcMIL	(2) 4"C	#3/0 AWG
1200	1203A	(4) 3#750 KcMIL	(4) 4"C	#3/0 AWG	1204A	(4) 4#750 KcMIL	(4) 4"C	#3/0 AWG
1600	1603	(4) 3#600 KcMIL	(4) 4"C	#4/0 AWG	1604	(4) 4#600 KcMIL	(2) 4"C	#4/0 AWG
2000	2003	(5) 3#600 KcMIL	(5) 4"C	250 KcMIL	2004	(5) 4#600 KcMIL	(5) 4"C	250 KcMIL
2500	2503	(6) 3#600 KcMIL	(6) 4"C	350 KcMIL	2504	(6) 4#600 KcMIL	(6) 4"C	350 KcMIL
3000	3003	(8) 3#600 KcMIL	(8) 4"C	400 KcMIL	3004	(8) 4#600 KcMIL	(8) 4"C	400 KcMIL
4000	4003	(10) 3#600 KcMIL	(10) 4"C	500 KcMIL	4004	(10) 4#600 KcMIL	(10) 4"C	500 KcMIL

LIGHTING FIXTURE SCHEDULE

TYPE	DESCRIPTION	MANUFACTURER & CATALOG NUMBER	LAMP TYPE	VOLTS	WATTS	LOCATION
A	2'X4' RECESSED FLUORESCENT FIXTURE WITH 18 CELL PARABOLIC LOUVER WITH ELECTRONIC BALLAST.	METALUX OVATION SERIES 2EP3GX-332S1 18 CELL GEB	3-F32T8 3500K	277V	89W	CONTROL ROOM
B	1'X4', 2-LAMP SURFACE MOUNTED FLUORESCENT LIGHTING FIXTURE WITH ELECTRONIC BALLAST.	LITHONIA LIGHTING M 2 32 A19 MVOLT GEB101S	F32T8	120V	59W	UNISEX RESTROOM
C	SURFACE CEILING MOUNTED LIGHTING FIXTURES IN HIGH GLOSS REFLECTOR WITH WHITE POWER COAT FINISH.	LITHONIA LIGHTING VGR1 32TRT GL MVOLT DWHG TRS LP1	32TRT	120V	30W	SHOWER ROOM
D	HIGH BAY LED LIGHT AND SUITABLE FOR DAMP LOCATION. MOUNTED 32 FEET AFF.	TITAN LED SIGNATURE SERIES 3-7-60	72 HIGH POWER LED	277V	159W	BOILER AREA
E	HIGH BAY LED LIGHT AND SUITABLE FOR DAMP LOCATION. MOUNTED 48 FEET AFF.	TITAN LED SIGNATURE SERIES 3-7-60	72 HIGH POWER LED	277V	159W	BOILER AREA
F	WALL PACK 18 HIGH POWER LED LIGHT WITH TEMPERED GLASS OPTICAL DIFFUSER. IP65 RATED. MOUNTED 14 FEET AFF.	TITAN LED SKU #1230	18 HIGH POWER LED	277V	48W	BOILER AREA

* PROVIDE FLUORESCENT LAMP BALLASTS AND LUMINAIRES CERTIFIED TO THE CALIFORNIA ENERGY COMMISSION BY THE MANUFACTURER TO COMPLY WITH THE ENERGY STANDARDS FOR SUCH APPLIANCES.

REGISTERED PROFESSIONAL ENGINEER FREDERICK M. JONES No. E14616 ELECTRICAL STATE OF CALIFORNIA

ZONE	LETTER	DESCRIPTION	DRAWN	DATE	APPRVD

REVISIONS

DRAWN H. FORTEZA	DATE
DESIGNED H. FORTEZA	DATE
CHECKED J.McCUSKER	DATE
A&E PM G.HITE	DATE
NASA PM W.LEE	DATE
REQUESTER G.RAICHE	DATE
R&QA	DATE
SAFETY/PSM	DATE
SUPERVISOR S.FRANKEL	DATE

Ames Research Center
Moffett Field, California

REPLACE ARC JET COMPLEX SVS BOILER
ELECTRICAL
LIGHTING FIXTURE, AND FEEDER SCHEDULES

SIZE D | CAGE CODE 25307 | 231-1300-E601 | REV
SCALE N.T.S. | INDEX | SHEET OF

FILE NAME: 231-E601.DWG 12/12/12

DWG: P:\234A\6021932.0001 (K11027) Replace Arc-Ject Complex SVS Boiler Final Design\500 CAD\ELSheet\231-E601.dwg Version: 17.1s (LMS Tech) User: wbonaldi
DATE: Jan 28, 2013 - 1:31:56 pm

NAMEPLATE SCHEDULE

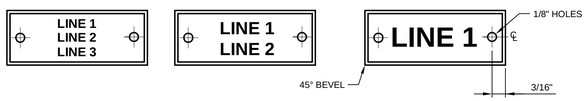

NO.	LINE 1	LINE 2	LINE 3	LINE SIZE	NP SIZE	COLOR CODE
N1	TRANSFORMER T312	1500 KVA		1/4	1 x 3	BW
N2	INCOMING LINE	13.8KV		3/16	1 x 3	BW
N3	SECONDARY LINE	480Y/277V		3/16	1 x 3	BW
N4	MAIN SWITCHBOARD MSB	2500A, 480Y/277V, 3Ø, 4W		1/4	1 x 3	BW
N5	MAIN CIRCUIT BREAKER	2500A		3/16	1 x 3	BW
N6	MOTOR CONTROL CENTER	MCC1A	1200A, 480V, 3Ø, 3W+G	1/4	1 x 3	BW
N7	MOTOR CONTROL CENTER	MCC1B	1200A, 480V, 3Ø, 3W+G	1/4	1 x 3	BW
N8						
N9						
N10	SPECIAL NAMEPLATE, SEE DETAIL N10			3/8, 3/4	4 x 6	RW

* TYPICAL - AS SHOWN ON DRAWINGS
ALL DIMENSIONS AND SIZES SHOWN ARE IN INCHES

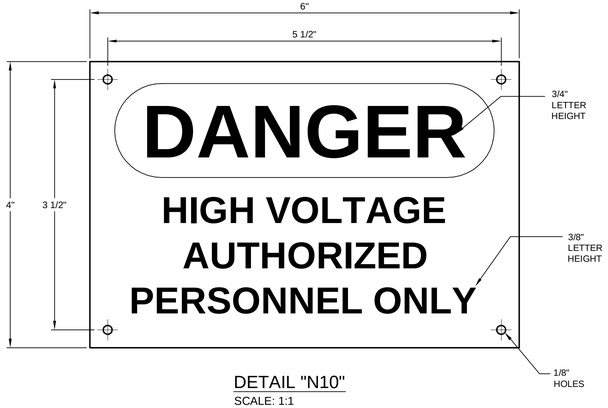

DETAIL "N10"
SCALE: 1:1

MOTOR CONTROL CENTER "MCC1A" SCHEDULE

1200A, 480V, 3-PHASE, 3W + GRND, 65 KAIC

FEEDER NUMBER	EQUIPMENT ID	EQUIPMENT DESCRIPTION	MOTOR HP	OVERCURRENT PROTECTION			STARTER		CONTROL DEVICES AT MCC	CONDUIT SIZE	CONDUCTOR # AND SIZE	DISCONNECT AT MOTOR	FMCS	REMARKS
				TYPE	FLA	POLES	NEMA SIZE	TYPE					CONDUIT SIZE	
MCC1A -1	MAIN CIRCUIT BREAKER	MAIN CIRCUIT BREAKER COMPARTMENT	-	1200A MCCB		3	-			3-4"C	3#600 KCMIL 1 #3/0(G) EA.			
MCC1A -2	SPACE	SPACE												
MCC1A -3	HXP-1	SCW PREHEATING (HOTWELL)	10	30A MCCB	14	3		VFD		3/4"C	3 #12 & 1#12(G)	30A, 3P, NF	3/4"C	
MCC1A -4	BFP-1	BOILER FEEDWATER PUMP #1	200	400A MCCB	240	3		VFD		3"C	3 #350 KCMIL & 1 #4(G)	400A, 3P, NF	3/4"C	
MCC1A -5	BFP-2	BOILER FEEDWATER PUMP #2	200	400A MCCB	240	3		VFD		3"C	3 #350 KCMIL & 1 #4(G)	400A, 3P, NF	3/4"C	
MCC1A -6	SPACE	SPACE												
MCC1A -7	XFMR-A	CONTROL TRANSFORMER	-	20A MCCB		2	-			3/4"C	2 #12 & 1#12(G)	-	-	CIRCUIT BRKR ONLY
MCC1A -8	SPACE	SPACE												
MCC1A -9	BFP-3	BOILER FEEDWATER PUMP #3	200	400A MCCB	240	3		VFD		3"C	3 #350 KCMIL & 1 #4(G)	400A, 3P, NF	3/4"C	
MCC1A -10	SPACE	SPACE												
MCC1A -11	SPACE	SPACE												
MCC1A -12	SPACE	SPACE												
MCC1A -13	SPACE	SPACE	-	-			-					-	-	
MCC1A -14	SPACE	SPACE	-	-			-					-	-	
MCC1A -15	SPACE	SPACE	-	-			-					-	-	
MCC1A -16	SPACE	SPACE	-	-			-					-	-	
MCC1A -17	SPACE	SPACE	-	-			-					-	-	
MCC1A -18	SPACE	SPACE	-	-			-					-	-	

MOTOR CONTROL CENTER "MCC1B" SCHEDULE

1200A, 480V, 3-PHASE, 3W + GRND, 65 KAIC

FEEDER NUMBER	EQUIPMENT ID	EQUIPMENT DESCRIPTION	MOTOR HP	OVERCURRENT PROTECTION			STARTER		CONTROL DEVICES AT MCC	CONDUIT SIZE	CONDUCTOR # AND SIZE	DISCONNECT AT MOTOR	FMCS	REMARKS
				TYPE	FLA	POLES	NEMA SIZE	TYPE					CONDUIT SIZE	
MCC1B -1	MAIN CIRCUIT BREAKER	MAIN CIRCUIT BREAKER COMPARTMENT	-	1200A MCCB		3	-			3-4"C	3#600 KCMIL 1 #3/0(G) EA.			
MCC1B -2	SPACE	SPACE												
MCC1B -3	SPARE	SPARE		50A MCP		3	2	FVNR	H-O-A & PILOT LIGHT					
MCC1B -4	XFMR-B	CONTROL TRANSFORMER		20A MCCB		2	-			3/4"C	2 #12 & 1#12(G)	-	-	CIRCUIT BRKR ONLY
MCC1B -5	SPACE	SPACE	-	-			-					-	-	
MCC1B -6	SPACE	SPACE												
MCC1B -7	SPACE	SPACE												
MCC1B -8	SPACE	SPACE												
MCC1B -9	SPACE	SPACE												
MCC1B -10	SPACE	SPACE												
MCC1B -11	SPACE	SPACE												
MCC1B -12	SPACE	SPACE												
MCC1B -13	FDF-3	FORCE DRAFT FAN #3	200	300A MCCB	240	3	5	VFD		3"C	3 #400 KCMIL & 1 #4(G)	400A, 3P, NF	3/4"C	
MCC1B -14	SPACE	SPACE												
MCC1B -15	SPACE	SPACE												
MCC1B -16	FDF-1	FORCE DRAFT FAN #1	200	300A MCCB	240	3		VFD		3"C	3 #400 KCMIL & 1 #4(G)	400A, 3P, NF	3/4"C	
MCC1B -17	FDF-2	FORCE DRAFT FAN #2	200	300A MCCB	240	3		VFD		3"C	3 #400 KCMIL & 1 #4(G)	400A, 3P, NF	3/4"C	
MCC1B -18	SPACE	SPACE												

SHEET NOTES

1. MANUFACTURER'S RECOMMENDATIONS FOR CONDUCTOR SIZING, CIRCUIT BREAKER OR FUSE RATING OF ELECTRICALLY OPERATED EQUIPMENT MAY DIFFER FROM THOSE INDICATED ON DRAWINGS. CONTRACTOR SHALL CONFIRM RATINGS PRIOR TO ORDERING EQUIPMENT.
2. MATERIAL 1/16 INCH THICK FORMICA WITH BEVELED EDGES.
3. FASTEN TO PANEL WITH 4-40x3/8" LONG STAINLESS SCREWS. DRILL PANEL WITH #39 DRILL & TAP.
4. ENGRAVED LINE TO BE 1/2" SHORTER THEN NP LENGTH. ALLOW 9 3/16" OR 6 1/4" CHARACTERS PER INCH.
5. COLOR CODE NAMEPLATE:
   BW=BLACK FACE WITH WHITE LETTERS
   RW=RED FACE WITH WHITE LETTERS

KEY NOTES

ZONE	LETTER	DESCRIPTION	DRAWN	DATE	APPRVD

REVISIONS

DRAWN H. FORTEZA	DATE	Ames Research Center Moffett Field, California
DESIGNED H. FORTEZA	DATE	
CHECKED J.McCUSKER	DATE	REPLACE ARC JET COMPLEX SVS BOILER
A&E PM G.HITE	DATE	ELECTRICAL
NASA PM W.LEE	DATE	EQUIPMENT NAMEPLATE AND MCC SCHEDULE
REQUESTER G.RAICHE	DATE	
R&QA -	DATE	SIZE D · CAGE CODE 25307 · 231-1300-E602 · REV
SAFETY/PSM	DATE	SCALE AS NOTED · INDEX · SHEET OF
SUPERVISOR S.FRANKEL	DATE	

REGISTERED PROFESSIONAL ENGINEER FREDERICK M. JONES No. E14616 ELECTRICAL STATE OF CALIFORNIA

FILE NAME: 231-E602.DWG 12/12/12

DWG: R:\234A\60212932.0001 (K11027) Replace ArcJect Complex SVS Boiler Final Design\500 CAD\ES\Sheet\231-E602.dwg Version: 17.1s (LMS Tech) User: wbonaldi
DATE: Jan 28, 2013 - 1:31:36 pm

DWG NO.	SH.	REV
A231-1300-E603		

SHEET NOTES

KEY NOTES

1. REMOVE (E) 20A, 2-POLE CIRCUIT BREAKER, CIRCUITS #13, 15, AND PROVIDE NEW TWP 20A, 1-POLE CIRCUIT BREAKER IN CIRCUIT #13 TO MATCH EXISTING KAIC RATING AND MANUFACTURER'S TYPE. CONNECT WIRES FROM CARD READER TO THE (N) 20A CIRCUIT BREAKER.

PANEL "HPA" SCHEDULE

Bldg. N231
Location: BOILER AREA
Manufacturer:
Nema Type: NEMA 3R
Mounting: Surface
Circuits: 42

Amp Rating: 225A
Service: 225A
Voltage: 480Y/277V
System: 3PH/4W
Main CB: MLO
AIC Rating:

Source: MAIN SWITCHBOARD "MSB3"
Source CB: 225A
Feeder Wire: 3 #4/0 AWG
Neutral Wire: 1 #4/0 AWG
Ground Wire: 1 #4 AWG
Conduit: 2 1/2C

Load Type: R - Receptacle L - Lighting M - Motor O - Other/Appliance

Service	Load Type	Load (KVA) A	B	C	Circuit Bkr.	No.	Phase A	B	C	Circuit No.	Bkr.	Load (KVA) A	B	C	Load Type	Service
HOIST REEL		0.50			15	1				2	20					SCR-3
			0.50			3				4						
				0.50	3	5				6	3					
SCR-2					20	7				8	20					SCR-1
						9				10						
					3	11				12	3					
SPARE					20/1	13				14	100	20.00				TRANSFORMER TLA - 75 KVA
SPARE					20/1	15				16			20.00			
SPARE					20/1	17				18	3			20.00		
SPARE					30	19				20	20/1					SPARE
						21				22	20/1					SPARE
					3	23				24	20/1					SPARE
SPARE					20/1	25				26						SPACE
SPARE					20/1	27				28						SPACE
SPARE					20/1	29				30						SPACE
SPARE					20/1	31				32						SPACE
SPACE						33				34						SPACE
SPACE						35				36						SPACE
SPACE						37				38						SPACE
SPACE						39				40						SPACE
SPACE						41				42						SPACE
		0.50	0.50	0.50								20.00	20.00	20.00		

Total Load per Phase (KVA): 20.50 | 20.50 | 20.50
Total Connected Load (KVA): 61.50
Total Connected Load per Ph (A): 170.8 170.8 170.8
Total Load (KVA): 61.50
Total Load (A): 74.0

(E)PANEL "300 " SCHEDULE

Bldg. N231
Location: HIGH BAY SOUTH WALL
Manufacturer: (E)
Nema Type: N1
Mounting: Surface
Circuits: 42

Amp Rating: 225A
Service: 225A
Voltage: 208Y/120V
System: 3PH/4W
Main CB: (E)
AIC Rating: (E)

Source: SWGR FROM BLDG. N229A 480V VIA 45 KVA XRMR
Source CB: 125A
Feeder Wire: (E)
Neutral Wire: (E)
Ground Wire: (E)
Conduit: (E)

Load Type: R - Receptacle L - Lighting M - Motor O - Other/Appliance

Service	Load Type	Load (KVA) A	B	C	Circuit Bkr.	No.	Phase A	B	C	Circuit No.	Bkr.	Load (KVA) A	B	C	Load Type	Service
(E) SEC. CONTACTOR LIGHT		0.70			20/1	1				2	20/1	0.6				(E) NITE LIGHT
(E) INSIDE NITE LIGHT			0.60		20/1	3				4	20/1		0.8			(E) RECEPT. IN TUNNEL
(E) RECEPT. RM 105				1.30	20/1	5				6	20/1			0.2		(E) CLOCK IN CONTROL RM
(E) RECEPT. IN COFFE RM		1.20			20/1	7				8	20/1	0.8				(E) 208V RECEPT. N/E WALL
(E) RECEPT. UNDER TUNNEL			1.20		20/1	9				10	20/1		0.8			(E) SHOP RECEPT.
(E) RECEPT. UNDER TUNNEL				1.20	20/1	11				12	20/1			0.8		(E) REC. UNDER ROLL-UP DOOR
1 **CARD READER**		**1.20**			**20/1**	13				14	20	0.50				(E) FIRE ALARM
SPARE					**20/1**	15				16			0.50			
(E) EMERGENCY LIGHT				0.80	20/1	17				18	3			0.50		
(E) 208V RECEPT. WEST BLUE		0.80			20	19				20	20	0.8				(E) ROLL-UP-DOOR
			0.80			21				22			0.8			
				0.80	3	23				24	3			0.8		
SPARE					70	25				26	20	0.8				(E) 208V RECEPT. SOUTH WALL
						27				28			0.8			
					3	29				30	3			0.8		
(E) WATER HEATER		2.00			30	31				32	20/1	0.5				(E) CARD READER
			2.00			33				34	20		0.8			(E) CARD READER
				2.00	3	35				36	2			0.8		
(E) A/C & EX. FAN WEST		3.60			70	37				38	20	0.8				(E) 208V RECEPT. WEST.
			3.60			39				40			0.8			
				3.60	**3**	41				42	3					
		9.50	8.20	9.70								4.80	5.30	3.90		

Total Load per Phase (KVA): 14.30 | 13.50 | 13.60
Total Connected Load (KVA): 41.400
Total Connected Load per Ph (A): 119.2 112.5 113.3
Total Load (KVA): 41.40
Total Load (A): 114.9

PANEL "LA" SCHEDULE

Bldg. N231
Location: BOILER AREA
Manufacturer:
Nema Type: NEMA 3R
Mounting: Surface
Circuits: 42

Amp Rating: 225A
Service: 225A
Voltage: 208Y/120V
System: 3PH/4W
Main CB: 225A
AIC Rating:

Source: PANEL HPA VIA TRANSFORMER TLA
Source CB: 100A
Feeder Wire: 3 #4/0 AWG
Neutral Wire: 1 #4/0 AWG
Ground Wire: 1 #4 AWG
Conduit: 2 1/2"C

Load Type: R - Receptacle L - Lighting M - Motor O - Other/Appliance

Service	Load Type	Load (KVA) A	B	C	Circuit Bkr.	No.	Phase A	B	C	Circuit No.	Bkr.	Load (KVA) A	B	C	Load Type	Service
SB-1 (STEAM BOILER CONTROL)		0.8			20/1	1				2	20/1	0.5				CFP-1 (CHEMICAL FEED-1)
SB-2 (STEAM BOILER CONTROL)			0.8		20/1	3				4	20/1		0.5			CFP-2A, 2B (CHEMICAL FEED-2)
SB-3 (STEAM BOILER CONTROL)				0.8	20/1	5				6	20/1			0.5		CFP-3A, 3B (CHEMICAL FEED-3)
SB-4 (STEAM BOILER CONTROL)		1.3			20/1	7				8	20/1	0.5				CFP-4A, 4B (CHEMICAL FEED-4)
HXP-2			0.2		20/1	9				10	20/1		1.0			CAB-202
HXP-3				0.2	20/1	11				12	20/1			1.0		CAB-201
GFCI RECEPTACLES		1.2			20/1	13				14	20/1					SPARE
GFCI RECEPTACLES			1.2		20/1	15				16	20/1					CARD READER
GFCI RECEPTACLES				0.8	20/1	17				18	20/1			1.2		BFP-4
SPARE					20/1	19				20	15/1					CAB-RO
SPARE					20/1	21				22	20/1					SPARE
SPARE					20/1	23				24	20/1					WS-1 (WATER SOFTENER)
WH-1 (WATER HEATER)		**5.0**			60	25				26	20/1					SPARE
			5.0			27				28	20/1					SPARE
				5.0	3	29				30	30/1					SPARE
SPARE					20	31				32	20					SPARE
						33				34						
					3	35				36	3					
SPARE					20	37				38	30					SPARE
						39				40						
					3	41				42	3					
		8.34	7.20	6.80								1.00	1.50	2.70		

Total Load per Phase (KVA): 9.34 | 8.70 | 9.50
Total Connected Load (KVA): 27.540
Total Connected Load per Ph (A): 77.8 72.5 79.2
Total Load (KVA): 27.54
Total Load (A): 76.4

(E)PANEL " CP " SCHEDULE

Bldg. N231
Location: HIGH BAY NORTH WALL
Manufacturer: (E)
Nema Type: N1
Mounting: Surface
Circuits: 42

Amp Rating: 225A
Service: 225A
Voltage: 208Y/120V
System: 3PH/5W
Main CB: (E)200A
AIC Rating: (E)

Source: SWGR FROM BLDG. N229A 480V VIA 75 KVA XRMR
Source CB: 125A
Feeder Wire: (E)3 #4/0
Neutral Wire: (E) 1 # 4/0
Ground Wire: (E) 1 #2/0 ISOLATED GROUND & 1 #2 (G)
Conduit: (E) 2 1/2"

Load Type: R - Receptacle L - Lighting M - Motor O - Other/Appliance

Service	Load Type	Load (KVA) A	B	C	Circuit Bkr.	No.	Phase A	B	C	Circuit No.	Bkr.	Load (KVA) A	B	C	Load Type	Service
(E) TEST AREA		3.60			50/1	1				2	50/1	3.6				(E) TEST AREA
CONTROL CABINET			**1.80**		30/1	3				4	30/1		0.8			(E) WIREMOLD RECEPT.
CONTROL CABINET				**1.80**	30/1	5				6	20/1			0.8		(E) TEST AREA
(E)WIREWAY REC.-CONTROL RM		0.80			20/1	7				8	20/1	0.8				(E) TEST AREA
			0.80		20/1	9				10	30/1		0.8			(E) WIREWAY REC.-CONTROL RM
				0.80	20/1	11				12	30/1			0.8		(E) WIREWAY REC.-CONTROL RM
		1.20			20/1	13				14	20/1	0.80				(E) TEST AREA
			1.20		20/1	15				16	20/1		0.80			(E) TEST AREA
				0.80	20/1	17				18	20/1			0.80		(E) TEST AREA
		0.80			20/1	19				20	20/1	0.8				(E) TEST AREA
			0.80		20/1	21				22	20/1		0.8			(E) TEST AREA
				0.80	20/1	23				24	20/1			0.8		(E) TEST AREA
		0.80			20/1	25				26	20/1	0.8				(E) TEST AREA
			0.80		20/1	27				28	20/1		0.8			(E) TEST AREA
CARD READER				0.80	20/1	29				30	20/1			0.8		(E) TEST AREA
ANHYDROUS AMMONIA SYSTEM					30/1	31				32	30/1	1.6				(E) WIREMOLD RECEPT.
(E)SERVO SYSTEM			1.20		20	33				34	20					SPARE
				1.20	3	35				36	2					
(E)LASER		3.60			50	37				38	30					SPARE
			3.60			39				40						
				3.60	**3**	41				42	3					
		10.80	10.20	9.80								8.40	4.00	4.00		

Total Load per Phase (KVA): 19.20 | 14.20 | 13.80
Total Connected Load (KVA): 47.200
Total Connected Load per Ph (A): 160.0 118.3 115.0
Total Load (KVA): 47.20
Total Load (A): 131.0

PANEL HLP SCHEDULE

Bldg.: N231
Room: BOILER AREA
Manufacturer:
NemaType: NEMA 3R
Mounting: Surface
Circuits: 30

Amp Rating: 100A
Service: 100A
Voltage: 480/277V
System: 3PH/4W
Main CB: M.L.O.
AIC Rating: 14 KAIC

Source: MAIN SWITCHBOARD "MSB3"
Source CB: 100A
Feeder Wire: 3 #1 AWG
Neutral Wire: 1 #1 AWG
Ground Wire: 1 #8 AWG
Conduit: 1 1/2"

Load Type: R - Receptacle L - Lighting M - Motor O - Other/Appliance

Service	Load Type	Load (KVA) A	B	C	Circuit Bkr.	No.	Phase A	B	C	Circuit No.	Bkr.	Load (KVA) A	B	C	Load Type	Service
CANOPY LIGHTING	L	2.40			20/1	1				2	20/1	1.600			L	PERIMETER LIGHTING
CANOPY LIGHTING	L		2.40		20/1	3				4	20/1		0.500			LIGHTING CONTACTOR
CANOPY LIGHTING	L			2.50	20/1	5				6	20/1			0.760		EMERGENCY LIGHTING
SPARE						7				8						SPARE
SPARE						9				10						SPARE
SPARE						11				12						SPARE
SPACE						13				14						SPACE
						15				16						
						17				18						
						19				20						
						21				22						
						23				24						
						25				26						
						27				28						
						29				30						
		2.40	2.40	2.50								1.600	0.500	0.760		

Total Load per Phase (KVA): 4.00 | 2.90 | 3.26
Total Connected Load (KVA): 10.16
Total Connected Load per Ph (A): 14.4 10.5 11.8
Total Load (KVA): 10.16
Total Load (A): 12.2

REGISTERED PROFESSIONAL ENGINEER FREDERICK M. JONES No. E14616 ELECTRICAL STATE OF CALIFORNIA

ZONE	LETTER	DESCRIPTION	DRAWN	DATE	APPRVD

REVISIONS

DRAWN H. FORTEZA	DATE
DESIGNED H. FORTEZA	DATE
CHECKED J.McCUSKER	DATE
A&E PM G.HITE	DATE
NASA PM W.LEE	DATE
REQUESTER G.RAICHE	DATE
R&QA	DATE
SAFETY/PSM	DATE
SUPERVISOR S.FRANKEL	DATE

Ames Research Center
Moffett Field, California

REPLACE ARC JET COMPLEX SVS BOILER
ELECTRICAL

PANEL SCHEDULES

SIZE	CAGE CODE		REV
D	25307	A 231-1300-E603	
SCALE N.T.S.		INDEX	SHEET OF

FILE NAME: 231-E603.DWG 12/12/12

DWG: R:\234\46021\2632.0001 (K11027) Replace Arc-Jet Complex SVS Boiler Final Design\500 CAD\ES\sheet\231-E603.dwg Version: 17.1s (LMS Tech) User: wbonaldi
DATE: Jan 28, 2013 - 14:43:57 pm

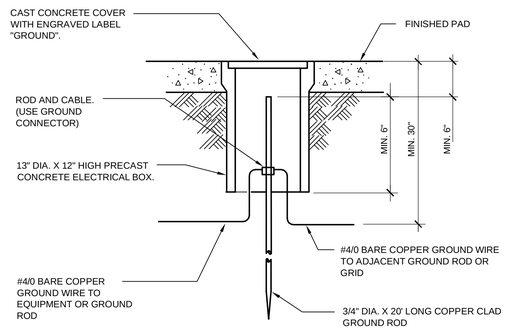

1 DETAIL-GROUND WELL
SCALE: N.T.S.

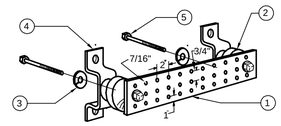

NOTES:

A. PROVIDED AND INSTALLED BY ELECTRICAL CONTRACTOR

1. COPPER GROUND BAR,1/4"X 4"X 20", NEWTON INSTRUMENT CO. CAT. NO. B-6142 (OR EQUAL). HOLE CENTERS TO MATCH NEMA DOUBLE LUG CONFIGURATION.
2. INSULATORS, NEWTON INSTRUMENT CAT. NO. 3061-4(OR EQUAL).
3. 5/8" LOCKWASHERS, NEWTON INSTRUMENT CO. CAT. NO. 3015-8(OR EQUAL).
4. WALL MOUNTING BRACKET, NEWTON INSTRUMENT CO. CAT NO. A-6056(OR EQUAL).
5. 5/8-11 X 1" H.H.C.S.BOLTS, NEWTON INSTRUMENT CO. CAT NO. 3012-1(OR EQUAL).

B. PROVIDE #4/0 BARE CU. WIRE WITH NEMA 2-HOLE CONNECTOR FROM MAIN BUILDING GROUND (MBG) BUS BAR TO MAIN COMPUTER GROUND (MCG) BUS BAR.

2 GROUND BUS BAR DETAIL
SCALE: N.T.S.

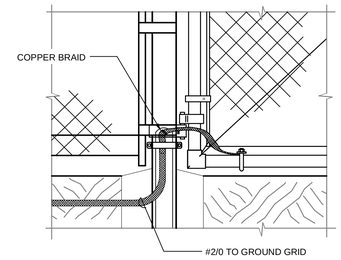

3 GATE GROUNDING DETAIL
SCALE: N.T.S.

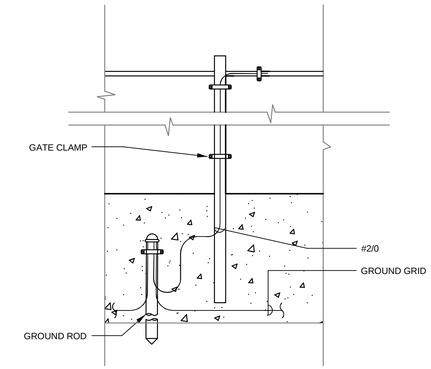

4 FENCE GROUNDING DETAIL
SCALE: N.T.S.

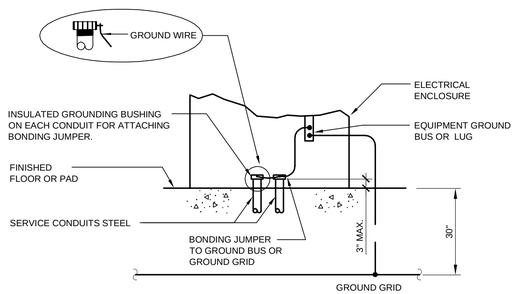

5 (TYPICAL FOR BOXES, CABINETS) CONDUIT GROUND CONNECTION DETAIL
SCALE: N.T.S.

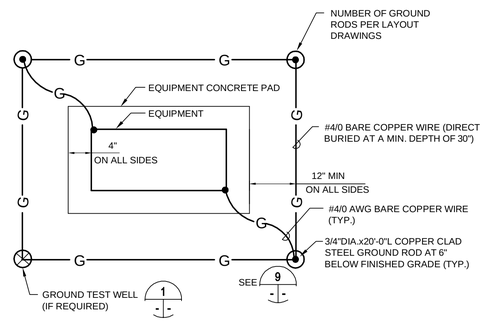

6 TYPICAL - NEW PAD MOUNTED EQUIPMENT GROUNDING DETAILS
SCALE: N.T.S.

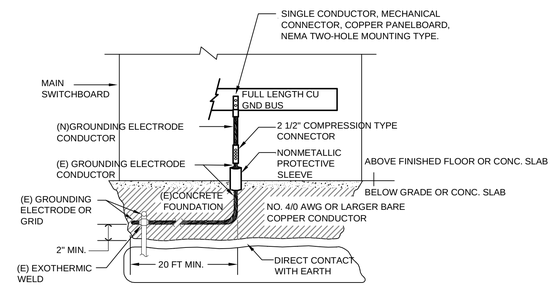

7 GROUND BUS BAR DETAIL
SCALE: N.T.S.

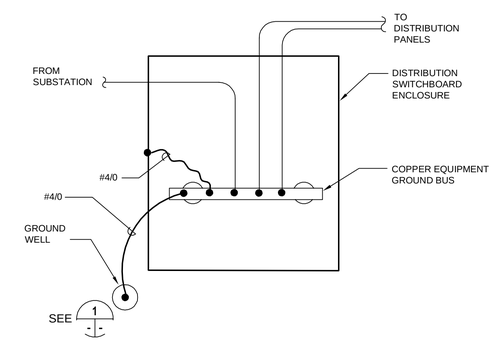

8 TYPICAL DISTRIBUTION SWITCHBOARD GROUNDING DETAIL
SCALE: NTS

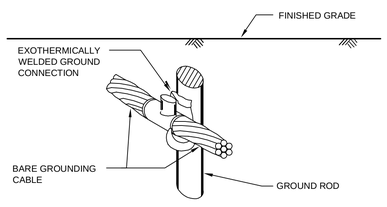

NOTES:
EXOTHERMICALLY WELDED GROUND CONNECTION SHALL BE SIZED ACCORDING TO THE MANUFACTURER'S SPECIFICATIONS FOR CABLE SIZE AND ROD USED, AS SHOWN ON PLANS.

9 DETAIL - GROUND CABLE CONNECTION TO GROUND ROD
SCALE: N.T.S.

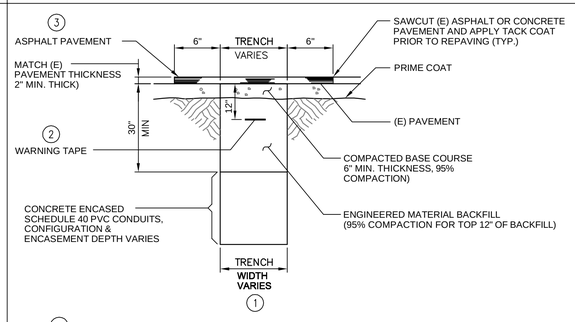

1. TRENCH SHALL BE CUT AS A GENERAL RULE A MINMUM OF 6" WIDER THAN NEEDED FOR CONDUIT/DUCTBANK.
2. METALLIC FOIL BRIGHT YELLOW WARNING TAPE.
3. RESTORE FINISHED GRADE TO ITS ORIGINAL CONDITION AFTER DUCT BANK INSTALLATION IS COMPLETED.

10 TRENCH ROAD OR TRAFFIC DETAIL - TYPICAL
SCALE: N.T.S.

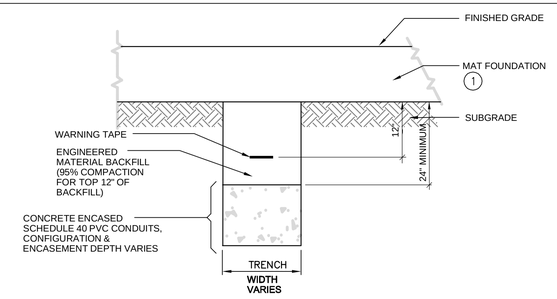

1. SEE STRUCTURAL DRAWING S301 FOR MAT FOUNDATION DETAILS.

11 UNDER MAT SLAB DUCT BANK SECTIONS
SCALE: N.T.S.

REGISTERED PROFESSIONAL ENGINEER FREDERICK M. JONES No. E14616 ELECTRICAL STATE OF CALIFORNIA

ZONE	LETTER	DESCRIPTION	DRAWN	DATE	APPRVD

REVISIONS

DRAWN H. FORTEZA	DATE
DESIGNED H. FORTEZA	DATE
CHECKED J.McCUSKER	DATE
A&E PM G.HITE	DATE
NASA PM W.LEE	DATE
REQUESTER G.RAICHE	DATE
R&QA –	DATE
SAFETY/PSM	DATE
SUPERVISOR S.FRANKEL	DATE

Ames Research Center
Moffett Field, California

REPLACE ARC JET COMPLEX SVS BOILER
ELECTRICAL

MISCELLANEOUS DETAILS

SIZE	CAGE CODE		REV
D	25307	A 231-1300-E701	
SCALE N.T.S.		INDEX	SHEET OF

FILE NAME: 231-E701.DWG 12/12/12

DWG: R:\23AA\60213932.0001\ (K11027) Replace Arc Jet Complex SVS Boiler Final Design\500 CAD\E\Sheet\231-E701.dwg Version: 17.1s (LMS Tech) User: wbonaldi
DATE: Jan 28, 2013 - 1:43:44 pm

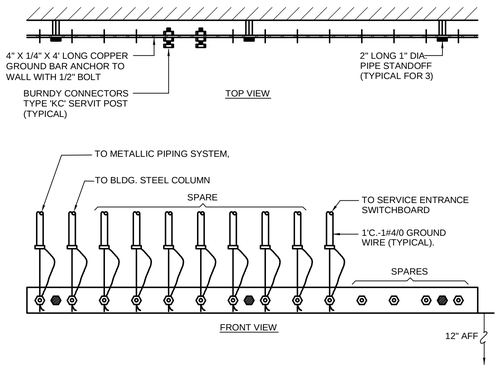

1 GROUND BUS BAR DETAIL
SCALE: N.T.S.

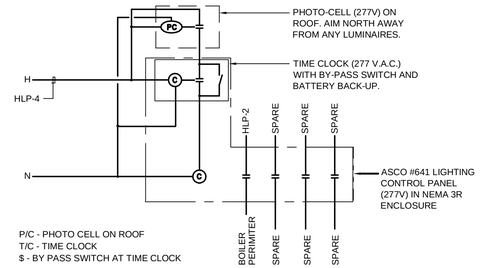

POLE	CIRCUIT	AREA	MANUAL ON	MANUAL OFF	AUTO ON	AUTO OFF	AUTO BYPASS	REMARKS
1	HLP-2	BOILER	-	-	P/C	T/C	$	PERIMETER LIGHTING
2			-	-	P/C	T/C	$	
3			-	-	P/C	T/C	$	
4			-	-	P/C	T/C	$	

2 EXTERIOR LIGHTING RELAY
SCALE: N.T.S.

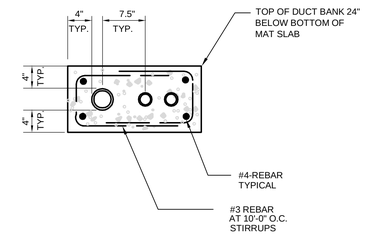

3 MV DUCT BANK SECTION
E102 E702 SCALE: N.T.S.

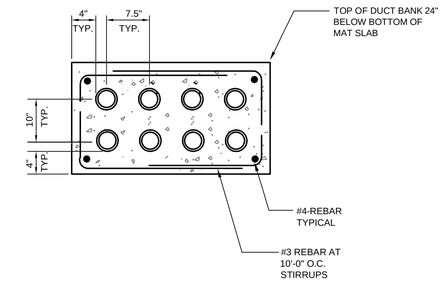

4 LOW VOLTAGE DUCT BANK
E102 E702 SCALE: N.T.S.

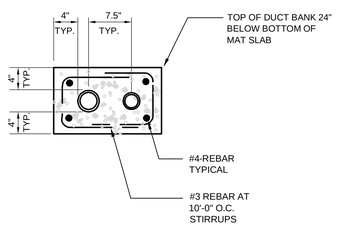

5 LOW VOLTAGE DUCT BANK
E102 E702 SCALE: N.T.S.

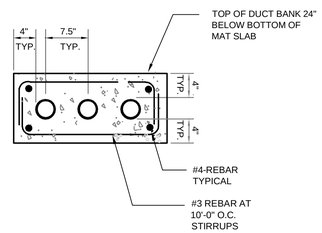

6 LOW VOLTAGE DUCT BANK
E102 E702 SCALE: N.T.S.

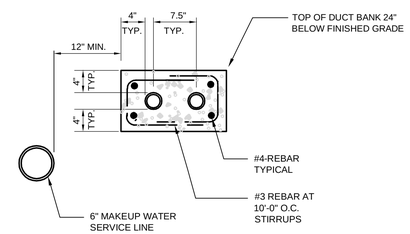

7 LOW VOLTAGE DUCT BANK AND WATER LINE
E102 E702 SCALE: N.T.S.

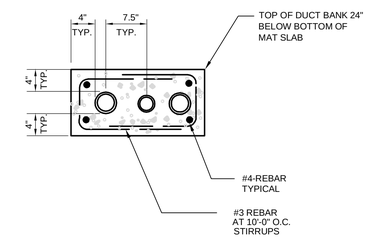

8 LOW VOLTAGE DUCT BANK
E102 E702 SCALE: N.T.S.

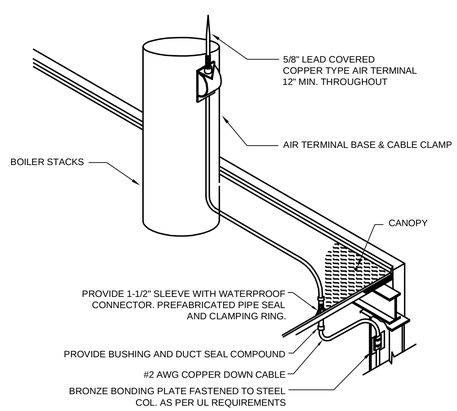

9 LIGHTNING PROTECTION DETAIL
- E702 SCALE: N.T.S.

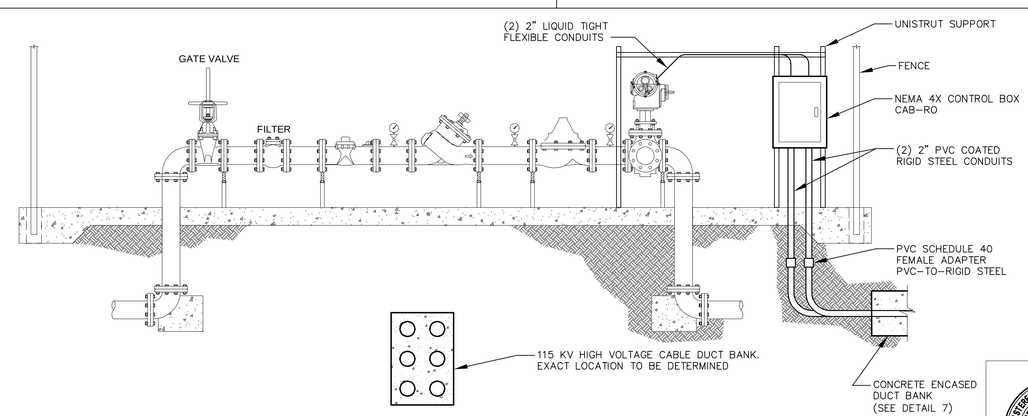

10 3-WAY VALVE CONTROL DETAIL
E102 E702 SCALE: N.T.S.

REGISTERED PROFESSIONAL ENGINEER FREDERICK M. JONES No. E14616 ELECTRICAL STATE OF CALIFORNIA

ZONE	LETTER	DESCRIPTION	DRAWN	DATE	APPRVD

REVISIONS

DRAWN H. FORTEZA	DATE
DESIGNED H. FORTEZA	DATE
CHECKED J.McCUSKER	DATE
A&E PM G.HITE	DATE
NASA PM W.LEE	DATE
REQUESTER G.RAICHE	DATE
R&QA -	DATE
SAFETY/PSM	DATE
SUPERVISOR S.FRANKEL	DATE

Ames Research Center
Moffett Field, California

REPLACE ARC JET COMPLEX SVS BOILER
ELECTRICAL

MISCELLANEOUS DETAILS

SIZE	CAGE CODE	
D	25307	A 231-1300-E702 REV
SCALE N.T.S.	INDEX	SHEET OF

FILE NAME: 231-E702.DWG 12/12/12

DWG: R:\234A\60212932.0001 (K11027) Replace ArcJect Complex SVS Boiler Final Design\500 CAD\E\Sheet\231-E702.dwg Version: 17.1s (LMS Tech) User: wbonaldi
DATE: Jan 28, 2013 - 1:43:29 pm

DWG NO.	SH.	REV
A231-1300-E703		

0145

3404

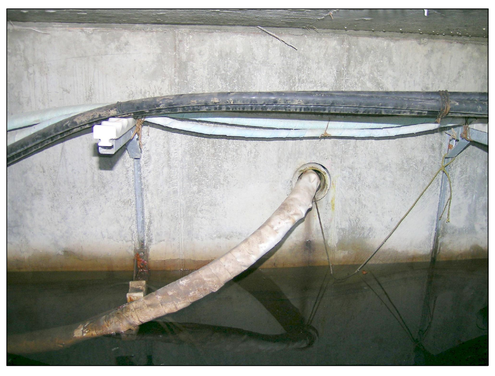

3405

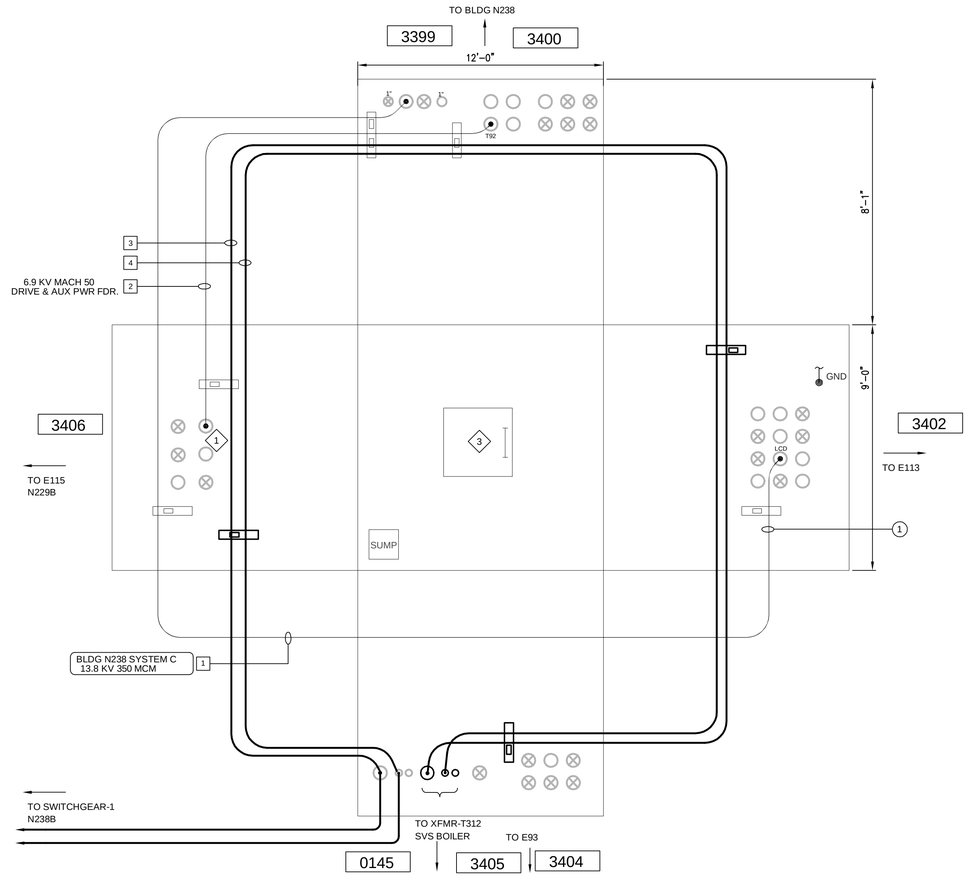

MANHOLE E114

(SOUTH OF N238)

1 UNDERGROUND POWER DISTRIBUTION MANHOLE E114 DETAILS

E102 | E703 SCALE: N.T.S.

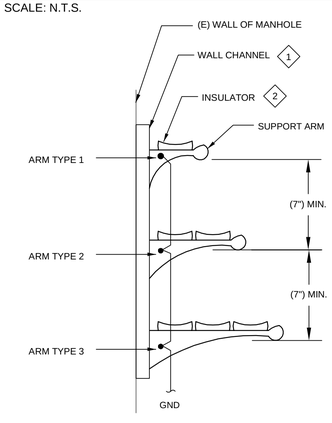

2 TYPICAL MULTIPLE CABLE RACK INSTALLATION

SCALE: NTS (SEE NOTE 1)

KEY NOTES

1. PROVIDE 2" CABLE RACK CHANNELS.
2. EACH CABLE INSULATOR SHOWN REPRESENTS SPACE ALLOCATION FOR 3-1/C #500KCMIL AND 1 #4/0 AWG GND OR 3-1/C #350KCMIL AND 1 #4/0 AWG GND AS SHOWN ON THE LAYOUT DRAWINGS.
3. MANHOLE OPENING SIZE: 42" x 42" x 23" DP.

SHEET NOTES

REF. DWGS.

A1---8703-E7	AMES RESEARCH CENTER UNDERGROUND ELECTRICAL DUCTS AREA #6.
A1---9801-E300	UNDERGROUND POWER DISTRIBUTION MANHOLE DRAWING INDEX.
A1---0202-E5	ELECTRICAL SITE PLAN UNDERGROUND POWER DUCTS AREA NO. 5.

CABLE DESCRIPTION

1	15KV, 3-1/C-350 MCM, EPR CABLE.
2	7.5KV, 3-1/C-500 MCM, VCL CABLE.
3	15KV, 3-1/C-1/0 AWG, EPR CABLE.
4	2 # 14 AND 2# 10 AWG, THWN TYPE CABLE.

FEEDER I.D. TAG

1	FEEDER SW 535/ACB 538

ZONE	LETTER	DESCRIPTION	DRAWN	DATE	APPRVD

REVISIONS

DRAWN H. FORTEZA	DATE	
DESIGNED H. FORTEZA	DATE	
CHECKED J.McCUSKER	DATE	
A&E PM G.HITE	DATE	
NASA PM W.LEE	DATE	
REQUESTER G.RAICHE	DATE	
R&QA –	DATE	
SAFETY/PSM –	DATE	
SUPERVISOR S.FRANKEL	DATE	

REGISTERED PROFESSIONAL ENGINEER FREDERICK M. JONES No. E14616 ELECTRICAL STATE OF CALIFORNIA

Ames Research Center
Moffett Field, California

REPLACE ARC JET COMPLEX SVS BOILER
ELECTRICAL
UNDERGROUND
POWER DISTRIBUTION
MANHOLE E114 DETAILS

SIZE	CAGE CODE		REV
D	25307	231-1300-E703	
SCALE AS NOTED		INDEX	SHEET OF

FILE NAME: 231-E703.DWG 12/12/12

DWG: P:\234A\60212932\0001 (K11027) Replace ArcJect Complex SVS Boiler Final Design\500 CAD\E\Sheet\231-E703.dwg Version: 17.1s (LMS Tech) User: vbonaldi
DATE: Jan 28, 2013 - 1:43:14 pm

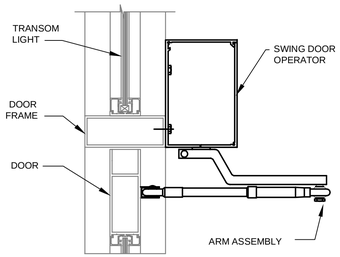

1 ADA OPERATOR MOUNTING DETAIL
SCALE: N.T.S.

SINGLE DOOR WITH ELECTRIFIED LOCK SET

1. MAGNETIC SPDT CONTACTS
2. HID PROXPRO CARD READER MOUNTED TO DOUBLE GANG METAL BOX
3. JUNCTION BOX
4. 1" C TO ACCESS CONTROL PANEL IN HIGH BAY WALL
5. (1) 6-CONDUCTOR #22 SHIELDED
6. (1) 2-CONDUCTOR #18 SHIELDED
7. (1) 2-CONDUCTOR #14 SHIELDED AND (1) 2-CONDUCTOR #22 SHIELDED
8. ARMORED DOOR CORD
9. LENEL EITHER AL1012ULX OR AL1024ULX POWER SUPPLY MAY BE LOCATED IN HIGH BAY WALL DEPENDING ON VOLTAGE DROP CONDITIONS.
10. BEST ACCESS 24VDC ELECTRIFIED LOCK SET (ELECTRICALLY UNLOCKED) WITH REQUEST-TO-EXIT FUNCTION

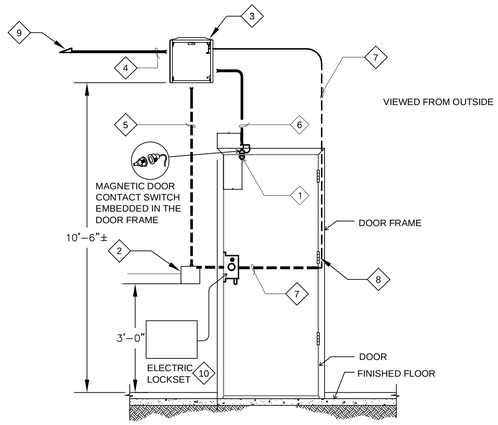

2 SINGLE DOOR-110A (ELECTRIFIED LOCKSET)
SCALE: N.T.S.

SINGLE DOOR WITH ELECTRIFIED MORTISE

1. EXISTING SURFACE MAGNETIC SPDT CONTACTS
2. HID PROXPRO CARD READER MOUNTED TO DOUBLE GANG METAL BOX
3. JUNCTION BOX
4. 1" C TO ACCESS CONTROL PANEL IN HIGH BAY WALL
5. (1) 6-CONDUCTOR #22 SHIELDED
6. (1) 2-CONDUCTOR #18 SHIELDED
7. (1) 2-CONDUCTOR #14 SHIELDED AND (1) 2-CONDUCTOR #22 SHIELDED
8. ARMORED DOOR CORD.
9. LENEL EITHER AL1012ULX OR AL1024ULX POWER SUPPLY MAY BE LOCATED IN HIGH BAY WALL DEPENDING ON VOLTAGE DROP CONDITIONS.
10. BEST ACCESS 24 VDC ELECTRIC MORTISE LOCK EXIT OPTION.

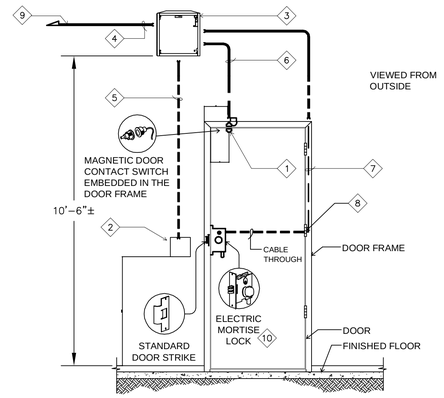

3 SINGLE DOOR -112 (ELECTRIFIED MORTISE)
SCALE: N.T.S.

DOUBLE DOOR WITH PANIC HARDWARE

1. RE-USE EXISTING CONTACTS (ONE SET ON EACH LEAF)
2. HID PROXPRO CARD READER MOUNTED TO DOUBLE GANG METAL BOX MOUNTED OPPOSITE SIDE OF ACTIVE LEAF
3. 3/4" C WITH 3#12 TO 120VAC PANEL (PREFERABLY AT THE HIGH BAY WALL)
4. 1" C TO ACCESS CONTROL PANEL IN HIGH BAY WALL
5. (1) 6-CONDUCTOR #22 SHIELDED
6. (1) 2-CONDUCTOR #18 SHIELDED
7. (1) 2-CONDUCTOR #14 SHIELDED AND (2) 2-CONDUCTOR #22 SHIELDED
8. ARMORED DOOR CORD.
9. VON DUPRIN POWER SUPPLY MOUNTED AS CLOSE DOOR AS PRACTICABLE
10. VON DUPRIN PANIC HARDWARE WITH ELECTRIC LATCH (EL). (EL) OPTION NOT REQUIRED FOR INACTIVE LEAF.

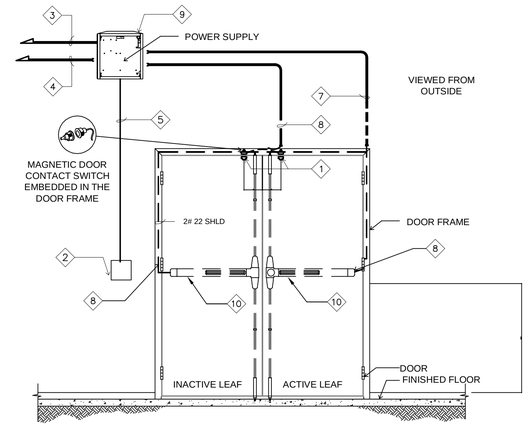

4 DOUBLE DOOR-110B (PANIC HARDWARE)
SCALE: N.T.S.

DOUBLE DOOR (PANIC HARDWARE) WITH ADA OPERATOR

1. MAGNETIC SPDT CONTACTS (ONE SET ON EACH LEAF)
2. HID PROXPRO CARD READER MOUNTED TO DOUBLE GANG METAL BOX MOUNTED OPOSITE SIDE OF ACTIVE LEAF, OR MOUNTED TO WALL
3. 3/4" C WITH 3#12 TO 120VAC PANEL (PREFERABLLY AT THE HIGH BAY WALL)
4. 1" C TO ACCESS CONTROL PANEL IN HIGH BAY WALL
5. (1) 6-CONDUCTOR #22 SHIELDED AND (1)2-CONDUCTER #18 SHIELD
6. (1) 2-CONDUCTOR #18 SHIELDED
7. (1) 2-CONDUCTOR #14 SHIELDED AND (2) 2-CONDUCTOR #22 SHIELDED
8. RE-USE EXISTING ARMORED DOOR CORD
9. VON DUPRIN PS 914-2RS POWER SUPPLY MOUNTED AS CLOSE TO DOOR AS PRACTICABLE
10. VON DUPRIN PANIC HARDWARE WITH ELECTRIC LATCH (EL) AND (EL)OPTION NOT REQUIRED FOR INACTIVE LEAF
11. LCN ELECTRIC AUTOEQUALIZER SERIES OPERATOR CLOSER
12. ADA PUSHPLATE (INTERIOR):

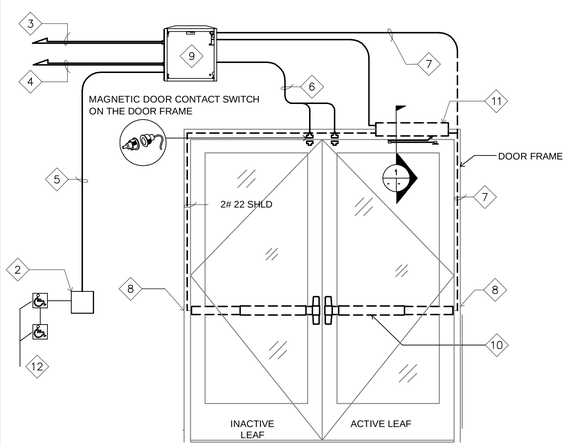

5 DOUBLE DOOR-107 (PANIC HARDWARE) WITH ADA OPERATOR
SCALE: N.T.S.

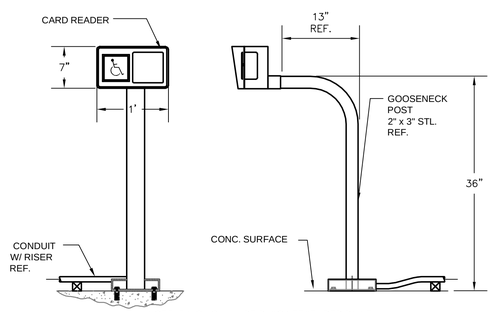

NOTE: FINISH SHALL BE BLACK TEXTURED PAINT.

6 PEDESTAL MOUNTED CARD READER FOR CHAINLINK GATE
SCALE: N.T.S.

GENERAL NOTES:

1. REFER TO ARCHITECTURAL FOR DOOR HARDWARE ITEMS.

REGISTERED PROFESSIONAL ENGINEER FREDERICK M. JONES No. E14616 ELECTRICAL STATE OF CALIFORNIA

ZONE	LETTER	DESCRIPTION	DRAWN	DATE	APPRVD

REVISIONS

DRAWN H. FORTEZA	DATE
DESIGNED H. FORTEZA	DATE
CHECKED J.MCCUSKER	DATE
A&E PM G.HITE	DATE
NASA PM W.LEE	DATE
REQUESTER G.RAICHE	DATE
R&QA -	DATE
SAFETY/PSM	DATE
SUPERVISOR S.FRANKEL	DATE

Ames Research Center
Moffett Field, California

REPLACE ARC JET COMPLEX SVS BOILER
ELECTRICAL

CARD READER DETAILS

SIZE	CAGE CODE		REV
D	25307	A 231-1300-E704	
SCALE N.T.S.		INDEX	SHEET OF

FILE NAME: 231-E704.DWG 12/12/12

DWG: R:\23AA\60213932.0001\ (K11027) Replace Arc Jet Complex SVS Boiler Final Design\500 CAD\E\Sheet\231-E704.dwg Version: 17.1s (LMS Tech) User: wbonaldi
DATE: Jan 28, 2013 - 1:42:59 pm

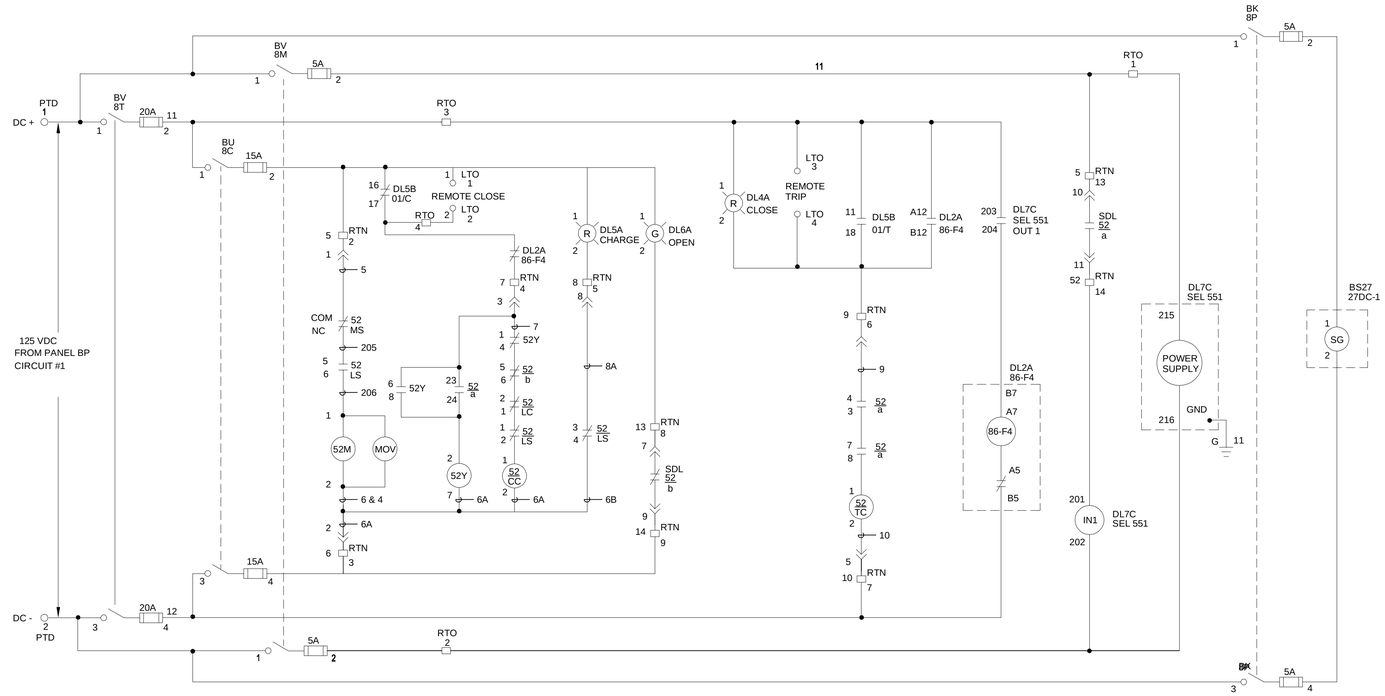

1 SWITCHGEAR-1 VCB 52F4 CONTROL RELAY ELEMENTARY DIAGRAM - EXISTING

SCALE: N.T.S.

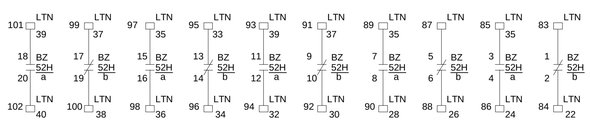

HOUSING SWITCH CONTACT (TOC-10) SHOWN WITH BREAKER IN TEST OR WITHDRAWN POSITION

☐ LTN = SPARE CONTACT WIRED TO CUSTOMER TERMINAL BLOCK.

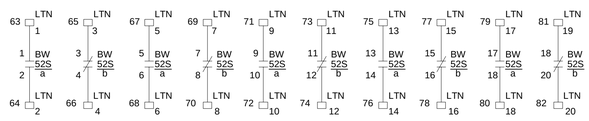

STATIONARY SWITCH CONTACT (TOC-10)

☐ LTN = SPARE CONTACT WIRED TO CUSTOMER TERMINAL BLOCK.

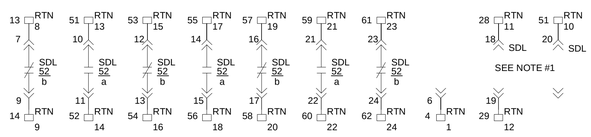

AUXILIARY CONTACT

* = USED CONTACT

NOTE 1 = OPTIONAL CIRCUIT NOT SUPPLIED WITH BREAKER.

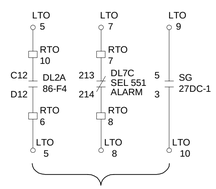

TO ANNUNCIATOR IN ITEM #007

DL2A 01

CONTACTS		POSITION		
		DECK	TRIP	NORMAL	CLOSE
11 — 18	1	X		
16 — 17				X

DL2A 86-F4

	86-F4 CONTACT	POSITION TRIP	POSITION RESET	
1	A11 - B11		X	USED IN CLOSED CIRCUIT — PAIRED CONTACTS USE ONE OR OTHER
	A12 - B12	X		USED IN TRIP CIRCUIT
	A1 - B1		X	
	A5 - B5		X	FACTORY WIRED TO RELAY TRIP COIL
	A6 - B6	X		
2	C11 - D11		X	USED BY ANNUNCIATOR — PAIRED CONTACTS USE ONE OR OTHER
	C12 - D12	X		
	C1 - D1		X	
	C5 - D5		X	
	C6 - D6	X		
	C7 - D7		X	
3	E11 - F11		X	PAIRED CONTACTS USE ONE OR OTHER
	E12 - F12	X		
	E1 - F1		X	
	E5 - F5		X	
	E6 - F6	X		PAIRED CONTACTS USE ONE OR OTHER
	E7 - F7		X	

LEGEND

52	CIRCUIT BREAKER
52M	SPRING CHARGING MOTOR
52Y	ANTI-PUMP
52/LS	SPRING CHARGING MOTOR LIMIT SWITCH
52/a	AUXILIARY SWITCH CONTACT
	OPEN WHEN BREAKER IS OPEN
52/b	AUXILIARY SWITCH CONTACT
	CLOSED WHEN BREAKER IS OPEN
50/51	OVERCURRENT RELAY
52/CC	CLOSE COIL
52/LC	LATCH CHECK SWITCH
52/MS	MOTOR CUTOFF SWITCH
52/TC	TRIP COIL
52H	TRUCK OPERATED (HOUSING) CONTACT
52S	MECHANISM OPERATED (STATIONARY) CONTACT
86	LOCKING-OUT RELAY
PTD	2 POLE DC POWER TERMINAL BLOCK
LTO	SECONDARY INTERCONNECTION TERMNIAL BLOCK
SDL	SECONDARY DISCONNECT
01	CONTROL SWITCH
8C	CLOSE CIRCUIT DISCONNECT
8T	TRIP CIRCUIT DISCONNECT

NOTES:

1. BREAKER SHOWN IN THE OPEN STATE WITH CLOSING SPRIGS CHARGED.
2. WHERE WIRES NUMBER CHANGE ON A WIRE, THERE ARE INTERVENING TERMINAL BLOCK NOT SHOWN.

OPERATION OF CIRCUIT BREAKER:

1. THE BREAKER WILL CLOSE IF THE CLOSING SPRINGS HAVE BEEN CHARGED ELECTRICALLY OR MANUALLY. 52/MS ENSURES THAT THE CLOSING SPRINGS CAN ONLY BE CHARGED ELECTRICALLY WITH THE BREAKER IN THE CONNECTED AND TEST POSITIONS.
2. THE CLOSING CIRCUIT HAS CONTINUITY WHEN THE CLOSING SPRINGS ARE CHARGED AND THE BREAKER IS OPEN. APPLYING A CLOSED SIGNAL ENERGIZES THE CLOSED COIL, 52/CC. IT DISCHARGES THE CLOSING SPRINGS, CLOSING THE BREAKER AND CHARGING THE OPENING SPRINGS, WHEN THE BREAKER CLOSES, 52/a, 52/b, AND 52/LS CHANGE STATE.
3. 52/a CLOSING ALLOWS CONTINUITY IN THE TRIP CIRCUIT AND PICKS UP THE ANTI-PUMP RELAY 52Y. 52Y SEALS ITSELF IN, ENSURING THAT THE CLOSED SIGNAL MUST BE REMOVED AND REAPPLIED BEFORE THE BREAKER CAN BE CLOSED AGAIN. 52/b, 52/LS AND 52Y OPEN THE CLOSING CIRCUIT. 52/LS CHANGING STATE ALLOWS THE CLOSING SPRING TO BE CHARGED.
4. APPLYING A TRIP SIGNAL ENERGIZES THE TRIP COIL, 52/TC. IT DISCHARGES THE OPENING SPRINGS, OPENING THE BREAKER. WHEN THE BREAKER OPENS, 52/a AND 52/b CHANGE STATE.
5. SPARE 52/a AMD 52/b CONTACT INDICATE THE BREAKER STATE. 52/a CLOSES WHEN BREAKER CLOSES, 52/b CLOSES WHEN THE BREAKER OPENS.

FOR REFERENCE ONLY

REGISTERED PROFESSIONAL ENGINEER FREDERICK M. JONES No. E14616 ELECTRICAL STATE OF CALIFORNIA

SHEET NOTES

KEY NOTES

ZONE	LETTER	DESCRIPTION	DRAWN	DATE	APPRVD

REVISIONS

DRAWN H. FORTEZA	DATE
DESIGNED H. FORTEZA	DATE
CHECKED J.McCUSKER	DATE
A&E PM G.HITE	DATE
NASA PM W.LEE	DATE
REQUESTER G.RAICHE	DATE
R&QA	DATE
SAFETY/PSM	DATE
SUPERVISOR S.FRANKEL	DATE

Ames Research Center
Moffett Field, California

REPLACE ARC JET COMPLEX SVS BOILER

ELECTRICAL

SWITCHGEAR-1
VCB 52F4 CONTROL RELAY
ELEMENTARY DIAGRAM - EXISTING

SIZE	CAGE CODE		REV
D	25307	A 231-1300-E801	
SCALE AS NOTED		INDEX	SHEET OF

FILE NAME: 231-E801.DWG 12/12/12

DWG: R:\234\N\0212\0202.0001(K11027) Replace Arc Jet Complex SVS Boiler Final Design\500 CAD\E\Sheet\231-E801.dwg Version: 17.1s (LMS Tech) User: wbonaldi
DATE: Jan 28, 2013 - 1:46:29 pm

DWG NO.	SH.	REV
231-1300-J001		

DRAWING SYMBOLS

- GATE VALVE - OPEN
- GATE VALVE - CLOSED
- BALL VALVE
- BUTTERFLY VALVE
- GLOBE VALVE
- PLUG VALVE
- NEEDLE VALVE
- 3-WAY VALVE
- CHECK VALVE OR EXCESS FLOW VALVE
- ANGLE VALVE - 90°
- CONTROL VALVE
- BACK PRESSURE REGULATOR
- PRESSURE REDUCING REGULATOR
- PRESSURE SAFETY VALVE
- HYDROSTATIC RELIEF VALVE
- SOLENOID
- MOTOR
- INSTRUMENT AIR SUPPLY
- PIPE CAP OR PLUG
- FLOW ORIFICE
- OPEN DRAIN
- FUNNEL FLOOR DRAIN
- FLOW LIMITING VALVE
- QUICK DISCONNECT
- POINT OF CONNECTION
- LIGHT
- DIAPHRAM ACTUATOR (ANALOG)
- DIAPHRAM ACTUATOR (ANALOG) WITH POSITIONER
- HAND ACTUATOR WITH POSITIONER
- HEAT EXCHANGER
- HEAT EXCHANGER
- CENTRIFUGAL PUMP
- FAN, BLOWER
- POSITIVE DISPLACEMENT METERING PUMP
- EDUCTOR
- STEAM TRAP ASSEMBLY
- THERMOWELL
- ANNUBAR FLOW ELEMENT
- REDUCER (ECCENTRIC)
- REDUCER (CONCENTRIC)
- Y-STRAINER
- STRAINER WITH VALVE
- TURBINE FLOWMETER
- VORTEX SHEDDING FLOWMETER
- INJECTION GRID
- LOW DB FLOW CARTRIDGE
- VIDEO CAMERA
- BEACON
- HORN

INSTRUMENT SYMBOLS

- PRIMARY ELEMENT OR LOCALLY MOUNTED INSTRUMENT
- FRONT PANEL MOUNTED INSTRUMENT IN CONTROL ROOM
- INSTRUMENT MOUNTED ON BACK OF PANEL
- INSTRUMENT FRONT PANEL MOUNTED AT AN AUXILIARY LOCATION
- MONITOR AND CONTROL SYSTEM (MCS) LOCAL SHARED DISPLAY & CONTROL (VIDEO SCREEN)
- MONITOR AND CONTROL SYSTEM (MCS) SHARED DISPLAY (VIDEO SCREEN) THROUGH PLC IN CONTROL ROOM
- PROGRAMMABLE LOGIC CONTROLLER PRIMARY LOCATION
- PROGRAMMABLE LOGIC CONTROLLER FIELD MOUNTED
- COMPUTER FUNCTION IN CONTROL ROOM

XX — INSTRUMENT ISA IDENTIFICATION

XNNN — SEQUENCIAL NUMBERS, 00-99

SYSTEM NUMBERS

00 - 09	STEAM VACUUM SYSTEM
30 - 39	BURNER MANAGEMENT SYSTEM
40 - 49	BOP
50 - 59	STEAM BOILER SYSTEM
60 - 66	BOILER FORCED AIR / STACK
67	COMPRESSED AIR

DRAWING CONTINUATION ARROW USED ONLY FOR LINES ENTERING OR LEAVING THE FACE OF THE DRAWING

DESCRIPTION — J703 — XN — DWG ZONE LOCATION — CONTINUATION DRAWING

HARD WIRED INTERLOCK — INTERLOCK NUMBER

SOFTWARE INTERLOCK — INTERLOCK NUMBER

P&ID LINE TYPES

- MAIN PROCESS FLOW LINE
- SECONDARY PROCESS FLOW LINE
- PNEUMATIC LINE
- ELECTRICAL SIGNAL
- CONTROL (LOGIC) SIGNAL

TRADEMARKS

ETHERNET	REGISTERED TRADEMARK OF XEROX CORPORATION
FIELDPOINT	REGISTERED TRADEMARK OF NATIONAL INSTRUMENTS
FLEX I/O	TRADEMARK OF ALLEN-BRADLEY INC.
PANELVIEW	REGISTERED TRADEMARK OF ALLEN-BRADLEY INC.

GENERAL NOTES

1. THE INSTRUMENTATION AND CONTROLS DRAWING SET INCLUDES DESIGN INFOR MATION PERTAINING TO THE SVS BOILER REPLACEMENT PROJECT. THE DESIGN DOES NOT INCLUDE SCOPE RELATED TO THE EXISTING BOILER PLANT OR EXISTING/FUTURE SVS CONTROLS. HOWEVER, INFORMATION PERTAINING TO THESE SYSTEMS ARE INCLUDED IN THE BLOCK DIAGRAM (DRAWING J602) FOR INFORMATION ONLY.
2. THE P&ID DRAWINGS ARE SCHEMATIC REPRESENTATIONS INTENDED TO SHOW THE BASIC CONFIGURATION. ALL ADDITIONAL CONTROL ITEMS NECESSARY TO MEET THE FUNCTIONAL REQUIREMENTS OF THE SEQUENCE OF OPERATION AND SPECIFICATIONS SHALL BE PROVIDED. PROVIDE A COMPLETE SYSTEM WHICH IS FUNCTIONAL IN ALL RESPECTS.
3. DESIGN, LAYOUT AND WIRING DIAGRAMS FOR SVS BOILER PANELS AND CABINETS IS THE RESPONSIBILITY OF THE BOILER MANUFACTURER.
4. TYPICAL BOILER P&IDS AND TAG NAMES PROVIDED FOR GUIDANCE. BOILER MANUFACTURER TO PROVIDE AS-BUILT P&IDS.
5. BURNER MANAGEMENT SYSTEM (BMS) INCLUDES LIGHT-OFF SEQUENCE, PURGE AND FLAME SAFETY SYSTEMS.
6. COMBUSTION CONTROL SYSTEM (CCS) INCLUDES FIRING RATE, (BOILER MASTER), AIR FLOW, OXYGEN TRIM, FUEL FLOW AND STEAM LEVEL CONTROLS.
7. BALANCE OF PLANT (BOP) INCLUDES WATER SOFTENER, DEAERATOR AND FEEDWATER TANK, BOILER FEED PUMPS, AUXILIARY BOILER, CHEMICAL FEED SYSTEM, WATER & STEAM SAMPLING SYSTEM, AND INSTRUMENT & PLANT AIR SYSTEM.
8. STEAM VACUUM SYSTEM (SVS) INCLUDES STEAM EJECTORS, CONDENSERS, HOT WELL, DEIONIZED WATER, NOx SCRUBBER EQUIPMENT, AND COOLING TOWERS.

ABBREVIATIONS

A	AIR
AFDCS	ARC-JET FACILITY DATA COLLECTION SYSTEM
AHWP	AUXILIARY HOT WATER PUMP
AHW	AUXILIARY HOT WATER
ATM	ATMOSPHERE
AUX	AUXILIARY (LOW PRESSURE STEAM)
AWG	AMERICAN WIRE GAUGE
BFD	BOILER FEEDWATER DRAIN
BFS	BOILER FEEDWATER SUCTION
BFP	BOILER FEED PUMP
BFR	BOILER FEEDWATER RETURN
BFW	BOILER FEEDWATER
BMC	BOILER MASTER CONTROLLER
BMS	BURNER MANAGEMENT SYSTEM
BOP	BALANCE OF PLANT
CAB	PLC CABINET
CBD	CONTINUOUS BLOWDOWN
CBF	CONTINUOUS BLOWDOWN FLASH
CBT	CONTINUOUS BLOWDOWN TANK
CCS	COMBUSTION CONTROL SYSTEM
CF	CHEMICAL FEED
CFP	CHEMICAL FEED PUMP
CMP	PLENUM RATED CABLE
CO	CARBON MONOXIDE
COMM	COMMUNICATIONS PANEL
CPU	CENTRAL PROCESSING UNIT
CS	CARBON STEEL
CWS	COOLING WATER SOURCE
DA	DRAFT AIR (BOILER)
DA	DEAERATOR (FEEDWATER)
DAB	DILUTION AIR BLOWER
DAH	DEAERATING HEATER
DCW	DOMESTIC COLD WATER
DI	DE-IONIZED
DP	DIFFERENTIAL PRESSURE
(E)	EXISTING
EL	ELEVATION
ENET	ETHERNET COMMUNICATIONS MODULE
ESW	ETHERNET SWITCH
FC	FAIL CLOSED
FD	FORCED DRAFT
FDF	FORCED DRAFT FAN
FFD	FUNNEL FLOOR DRAIN
FGR	FLUE GAS RECIRCULATION
FLV	FLOW LIMITING VALVE
FNPT	FEMALE NATIONAL PIPE THREAD
FO	FAIL OPEN
FS	FORGED STEEL
FSS	FLAME SAFETY SYSTEM
FW	FEEDWATER
FWD	FEEDWATER DRAIN
FWR	FEEDWATER RETURN
G	GAS (LOW PRESSURE)
HB	HOT WATER BOILER
HOA	HAND-OFF-AUTO
HPC	HIGH PRESSURE CONDENSATE
HPS	HIGH PRESSURE STEAM
HMI	HUMAN MACHINE INTERFACE (WORK STATION)
HX	HEAT EXCHANGER
HXP	HEAT EXCHANGER PUMP
IA	INSTUMENT AIR
IAS	INSTRUMENT AIR SUPPLY
IBD	INTERMITTENT BLOWDOWN
IBT	INTERMITTENT BLOWDOWN TANK
ICW	INSTRUMENT COLD WATER
IJB	INSTRUMENT JUNCTION BOX
I/O	INPUT/OUTPUT
IW	INDUSTRIAL WASTE
IP	INTERNET PROTOCAL (ETHERNET ADDRESS)
KVM	KEYBOARD, VIDEO, MOUSE CONTROLLER
LPS	LOW PRESSURE STEAM
MC	MEDIA CONVERTER (FIBER TO ETHERNET)
MPG	MEDIUM PRESSURE GAS
MU	MAKE-UP
NA	NOT APPLICABLE
NC	NORMALLY CLOSED
NG	NATURAL GAS
NH3	AMMONIA
NO	NITRIC OXIDE (GAS)
NO	NORMALLY OPENED (VALVES)
NOx	NITROGEN OXIDES NO AND NO 2
NPT	NATIONAL PIPE THREAD
N2	NITROGEN
O/C	OPENED/CLOSED
O2	OXYGEN
P&ID	PIPING AND INSTRUMENTATION DIAGRAM
PB	PULL BOX
PCV	PRESSURE CONTROL VALVE
PLC	PROGRAMMABLE LOGIC CONTROLLER
PRV	PRESSURE REGULATING VALVE
PS	POWER SUPPLY MODULE
PSV	PRESSURE SAFETY VALVE
QD	QUICK DISCONNECT
RO	REVERSE OSMOSIS
RPZ	REDUCED PRESSURE ZONE
RVD	RELIEF VALVE DISCHARGE
SB	STEAM BOILER
SC	SAMPLE COOLER
SCR	SELECTIVE CATALYTIC REDUCTION
SCW	SOFTENED COLD WATER
SOV	SOLENOID OPERATED VALVE
SPW	SOFT PREHEATED WATER
SS	STAINLESS STEEL
ST	STEAM TRAP
STR	STRAINER
SVS	STEAM VACUUM SYSTEM
TBD	TO BE DETERMINED
TK	TANK
TSF	THERMOPHYSICS FACILITY BRANCH
UPS	UNINTERRUPTABLE POWER SUPPLY
V	VENT
VC	VIDEO CAMERA
VFD	VARIABLE FREQUENCY DRIVE

ISA IDENTIFICATION LETTERS

	FIRST-LETTER		SUCCEEDING-LETTERS		
	MEASURED OR INITIATING VARIABLE	MODIFIER	READOUT OR PASSIVE FUNCTION	OUTPUT FUNCTION	MODIFIER
A	ANALYSIS		ALARM		
B	BURNER, COMBUSTION		USER'S CHOICE	USER'S CHOICE	USER'S CHOICE
C	CONDUCTIVITY	CONTROLLER		CONTROL	CLOSED
D	DENSITY	DIFFERENTIAL/DETECTOR			
E	VOLTAGE		SENSOR (PRIMARY ELEMENT)		
F	FLOW RATE	RATIO (FRACTION)			
G	USER'S CHOICE		GLASS, VIEWING DEVICE		
H	HAND				HIGH
I	CURRENT (ELECTRICAL)		INDICATE		
J	POWER	SCAN			
K	TIME, TIME SCHEDULE	TIME RATE OF CHANGE		CONTROL STATION	
L	LEVEL		LIGHT		LOW
M	MOISTURE	MOMENTARY			MIDDLE, INTERMEDIATE
N	USER'S CHOICE		USER'S CHOICE	USER'S CHOICE	USER'S CHOICE
O	USER'S CHOICE		ORIFICE, RESTRICTION		OPENED
P	PRESSURE, VACUUM		POINT (TEST) CONNECTION		
Q	QUANTITY	INTEGRATE, TOTALIZE			
R	RADIATION		RECORD		
S	SPEED, FREQUENCY	SAFETY		SWITCH	SAMPLER
T	TEMPERATURE			TRANSMIT	
U	MULTIVARIABLE		MULTIFUNCTION	MULTIFUNCTION	MULTIFUNCTION
V	VIBRATION, MECHANICAL ANALYSIS			VALVE, DAMPER, LOUVER	
W	WEIGHT, FORCE		WELL		
X	MOTOR STARTER	X AXIS	UNCLASSIFIED	UNCLASSIFIED	UNCLASSIFIED
Y	EVENT, STATE OR PRESENCE	Y AXIS		RELAY, COMPUTE, CONVERT	
Z	POSITION, DIMENSION	Z AXIS		DRIVER, ACTUATOR, UNCLASSIFIED	

REGISTERED PROFESSIONAL ENGINEER FREDERICK M. JONES No. E14616 ELECTRICAL STATE OF CALIFORNIA

ZONE	LETTER	DESCRIPTION	DRAWN	DATE	APPRVD

REVISIONS

DRAWN R. CLARK	DATE
DESIGNED A. ERMI	DATE
CHECKED N. CAMARATA	DATE
A&E PM G.HITE	DATE
NASA PM W.LEE	DATE
REQUESTER G.RAISCHE	DATE
R&QA	DATE
SAFETY/PSM	DATE
SUPERVISOR S.FRANKEL	DATE

Ames Research Center
Moffett Field, California

REPLACE ARC JET COMPLEX SVS BOILER
INSTRUMENTATION & CONTROL

INSTRUMENTATION LEGEND, SYMBOLS, GENERAL NOTES & ABBREVIATIONS

SIZE	CAGE CODE		REV
D	25307	A 231-1300-J001	
SCALE NONE		INDEX	SHEET OF

FILE NAME: 231-J001.DWG 01/28/2013

DWG: P:\NASA_Ames\1 Replace Arc Jet Boiler\CAD\I&C\Sheet\231-J001.dwg Version: 19.2s (LMS Tech) User: thomasc
DATE: Jan 28, 2013 - 10:48:36 am

DWG NO.	SH.	REV
A231-1300-J101		

PARTS/MATERIAL LIST

ITEM NO.	QTY	DESCRIPTION	MANUFACTURER	PART NUMBER
1	1	OPERATOR CONSOLE, ~2 FT X ~12 FT	WINSTEAD	PRESTIGE SIGHT LINE SERIES WITH APPLICABLE ACCESSORIES FOR MOUNTING MONITORS (OR EQUIVALENT)
2	1	OPERATOR WORKSTATION DESK, 2 FT X 4 FT	GOVERNMENT FURNISHED EQUIPMENT	NA
3	2	TABLE, 2 FT X 5 FT	GOVERNMENT FURNISHED EQUIPMENT	NA
4	1	PRINTER STAND WITH DRAWERS, 2 FT X 3 FT	GOVERNMENT FURNISHED EQUIPMENT	NA
5	1	FILE CABINET, 4 DRAWERS, 15" X 25" X 52"	GOVERNMENT FURNISHED EQUIPMENT	NA
6	1	DRAWING CABINET, 16" W X 39" D X 54 3/4"H	GOVERNMENT FURNISHED EQUIPMENT	NA
7	2	BOOKSHELF, 5 SHELVES, 3 FT WIDE X 1 FT DEEP X 6 FT HIGH	GOVERNMENT FURNISHED EQUIPMENT	NA
8	4	OFFICE CHAIR	GOVERNMENT FURNISHED EQUIPMENT	NA

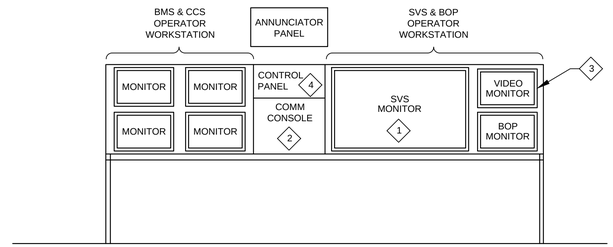

A OPERATOR CONSOLE MONITORS AND EQUIPMENT
SCALE: NONE

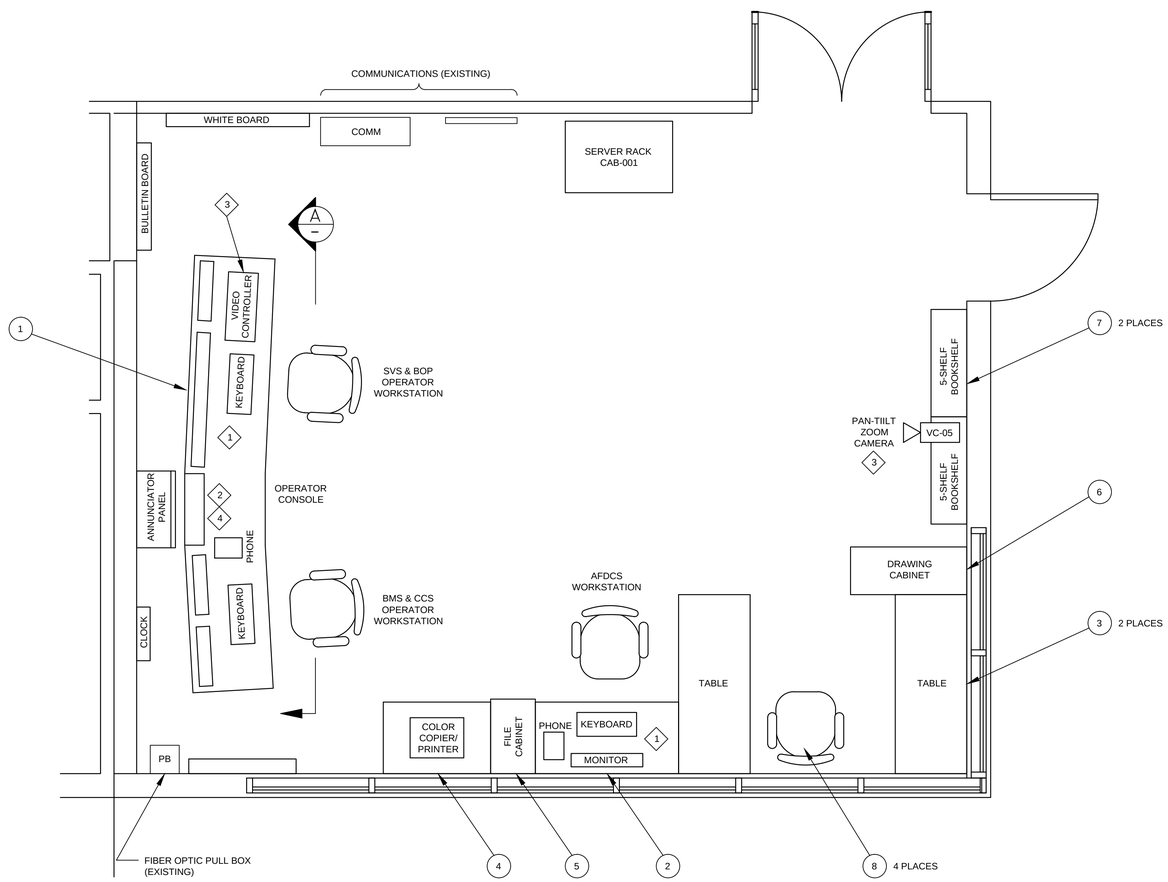

1 CONTROL ROOM LAYOUT
SCALE: 1/2" = 1'-0"

N

SHEET NOTES

1. SEE DRAWING J001 FOR GENERAL NOTES AND ABBREVIATIONS.

KEY NOTES

1. SVS AND AFDCS WORKSTATION COMPUTERS/MONITORS PROVIDED BY OTHERS.

2. ADDITIONAL INFORMATION ON COMM CONSOLE (INTERCOM) ON DRAWING J602, DRAWING E103 AND IN SPECIFICATION SECTION 27 21 00.00 40 INTERCOMMUNICATIONS SYSTEM.

3. .VIDEO CAMERA SYSTEM -
PROVIDE THE CAPABILITY TO OBSERVE THE BOILER PLANT AT FOUR LOCATIONS, THE N234A CONTROL ROOM, AND THE N231 CONTROL ROOM.

A. VIDEO SIGNAL FORMAT SHALL COMPLY WITH THE NTSC STANDARD FOR COMPOSITE VIDEO, INTERLACED. COMPOSITE VIDEO SIGNAL TERMINATION SHALL BE 75 OHMS.

B. PROTECT COMPONENTS FROM VOLTAGE SURGES ORIGINATING EXTERNAL TO EQUIPMENT HOUSING.

C. COLOR CAMERA, MOTORIZED PAN AND TILT, ZOOM LENS, AND RECEIVER / DRIVER.
1. PICKUP DEVICE: 768(H) BY 494(V) PIXELS.
2. HORIZONTAL RESOLUTION: 540 LINES
3. SIGNAL-TO-NOISE RATIO: NOT LESS THAN 50 dB, WITH THE CAMERA AGC OFF.
4. WITH AGC, MANUALLY SELECTABLE ON OR OFF.
5. SENSITIVITY: CAMERA SHALL PROVIDE USABLE IMAGES IN LOW-LIGHT CONDITIONS, DELIVERING AN IMAGE AT A SCENE ILLUMINATION OF 0.65 LUX AT 1/60 SEC.
6. MANUALLY SELECTABLE MODES FOR BACKLIGHT COMPENSATION OR NORMAL LIGHTING.
7. PAN AND TILT: DIRECT-DRIVE MOTOR, 90-DEGREE ROTATION ANGLE, AND NINETY-DEGREE TILT ANGLE.

D. PROVIDE COLOR-CORRECTED LENSES WITH COLOR CAMERAS DESIGNED SPECIFICALLY FOR VIDEO SURVEILLANCE APPLICATIONS, AND MATCHED TO SPECIFIED CAMERA.
1. AUTO-IRIS LENS: ELECTRICALLY CONTROLLED IRIS WITH CIRCUIT SET TO MAINTAIN A CONSTANT VIDEO LEVEL IN VARYING LIGHTING CONDITIONS.
2. ZOOM LENSES: MOTORIZED, REMOTE-CONTROLLED UNITS, RATED AS "QUIET OPERATING". FEATURES INCLUDE THE FOLLOWING:
   a. ELECTRICAL LEADS: FILTERED TO MINIMIZE VIDEO SIGNAL INTERFERENCE.
   b. MOTOR SPEED: VARIABLE.
   c. LENS SHALL BE AVAILABLE WITH PRESET POSITIONING CAPABILITY TO RECALL THE POSITION OF SPECIFIC SCENES.

E. PAN-AND-TILT UNITS: MOTORIZED UNITS ARRANGED TO PROVIDE REMOTE-CONTROLLED AIMING OF CAMERAS WITH SMOOTH AND SILENT OPERATION AND EQUIPPED WITH MATCHING MOUNTING BRACKETS.
1. PANNING ROTATION: 0 TO 90 DEGREES, WITH ADJUSTABLE STOPS.
2. TILT MOVEMENT: 90 DEGREES, PLUS OR MINUS 5 DEGREES, WITH ADJUSTABLE STOPS.
3. SPEED: 12 DEGREES PER SECOND IN BOTH HORIZONTAL AND VERTICAL PLANES,
4. WIRING: FACTORY PREWIRED FOR CAMERA AND ZOOM LENS FUNCTIONS AND PAN-AND-TILT POWER AND CONTROL.
5. BUILT-IN ENCODERS OR POTENTIOMETERS FOR POSITION FEEDBACK.
6. PAN-AND-TILT UNIT SHALL BE AVAILABLE WITH PRESET POSITIONING CAPABILITY TO RECALL THE POSITION OF A SPECIFIC SCENE.

F. 21 INCH LCD MONITOR.

G. DIGITAL, TIME-LAPSE TYPE, FULL FRAME AND MOTION RECORDER.
1. RECORDING TIME: 400 HOURS MINIMUM
2. RESOLUTION: 720 X 480, MINIMUM.
3. PROGRAMMING SHALL INCLUDE THE FOLLOWING:
   a. PASSWORD PROTECTION
   b. CONTIUOUS RECORDING OPTION.
   c. TIME-LAPSE OPERATING MODES.
   d. SEARCH VIDEO BY TIME, EVENT, OR MOTION.

H. PAN-TILT-ZOOM CONTROLS: ARRANGED FOR MULTIPLE-CAMERA CONTROL, WITH SWITCHES TO SELECT CAMERA TO BE CONTROLLED.
1. PAN-AND-TILT CONTROL: JOYSTICK TYPE.
2. ZOOM CONTROL: MOMENTARY-CONTACT, "IN-OUT" PUSH BUTTON.
3. AUTOMATIC-SCAN-CONTROL: A PUSH BUTTON FOR EACH CAMERA WITH PAN CAPABILITY PLACES THAT CAMERA IN AUTOMATIC-SCANNING CONTROL MODE.

I. CONNECT CAMERAS TO NETWORK SWITCH USING CAT5e CABLE AND RJ-45 CONNECTORS.

J. CAT5e CABLE, USED FROM DIGITAL VIDEO INTERFACE TO CONTROLLER / JOYSTICK USING USB TO RJ-45 ADAPTER.

4. MANUAL CONTROL PANEL FOR KIRK KEYS AND NH3 EMERGENCY BUTTON.

ZONE	LETTER	DESCRIPTION	DRAWN	DATE	APPRVD

REVISIONS

DRAWN R. CLARK	DATE
DESIGNED A. ERMI	DATE
CHECKED N. CAMARATA	DATE
A&E PM G.HITE	DATE
NASA PM W.LEE	DATE
REQUESTER G.RAISCHE	DATE
R&QA	DATE
SAFETY/PSM	DATE
SUPERVISOR S.FRANKEL	DATE

REGISTERED PROFESSIONAL ENGINEER FREDERICK M. JONES No. E14616 ELECTRICAL STATE OF CALIFORNIA

Ames Research Center
Moffett Field, California

REPLACE ARC JET COMPLEX SVS BOILER
INSTRUMENTATION & CONTROL

CONTROL ROOM LAYOUT

SIZE	CAGE CODE		REV
D	25307	A 231-1300-J101	
SCALE SHOWN		INDEX	SHEET OF

FILE NAME: 231-J101.DWG 12/12/2012

DWG: P:\NASA Ames\1 Replace Arc Jet Boiler\CADI&C\Sheet\231-J101.dwg Version: 18.2s (LMS Tech) User: davisonv
DATE: Dec 10, 2012 - 4:16:23 pm

DWG NO.	SH.	REV
A231-1300-J102		

SHEET NOTES

1. SEE DRAWING J001 FOR GENERAL NOTES, ABBREVIATIONS AND SYMBOLS.

KEY NOTES

1. REMOTE I/O CABINET. DASHED LINES INDICATE SERVICE CLEARANCE.
2. COMMUNICATIONS CONDUIT, 1 1/4" RIGID STEEL.
3. TO CAB-001 IN CONTROL ROOM.
4. INSTRUMENT AIR AND SHOP AIR TO BE CONNECTED TO EXISTING LINES ADJACENT TO BLDG N231.
5. LOCATED NORTH OF BOILER PLANT NEAR HUNSAKER ROAD.
6. MOUNT VIDEO CAMERAS TO CANOPY SUPPORT COLUMNS. HEIGHT TO BE DETERMINED AT TIME OF INSTALLATION.
7. LOCATED IN N231 CONTROL ROOM
8. LOCATE BEACONS FOR MAXIMUM VISIBILITY. ALARM UA-6637 CONSISTS OF BEACON AND HORN.
9. LOCATE LIGHT ZLC-6609 NEAR VALVE SOV-6609 TO BE VISIBLE OUTSIDE OF BOILER PLANT NE MAN-GATE. LIGHT TO BE ACCOMPANIED WITH LABEL STATING "NH3 EMERGENCY SHUT-OFF CLOSED".

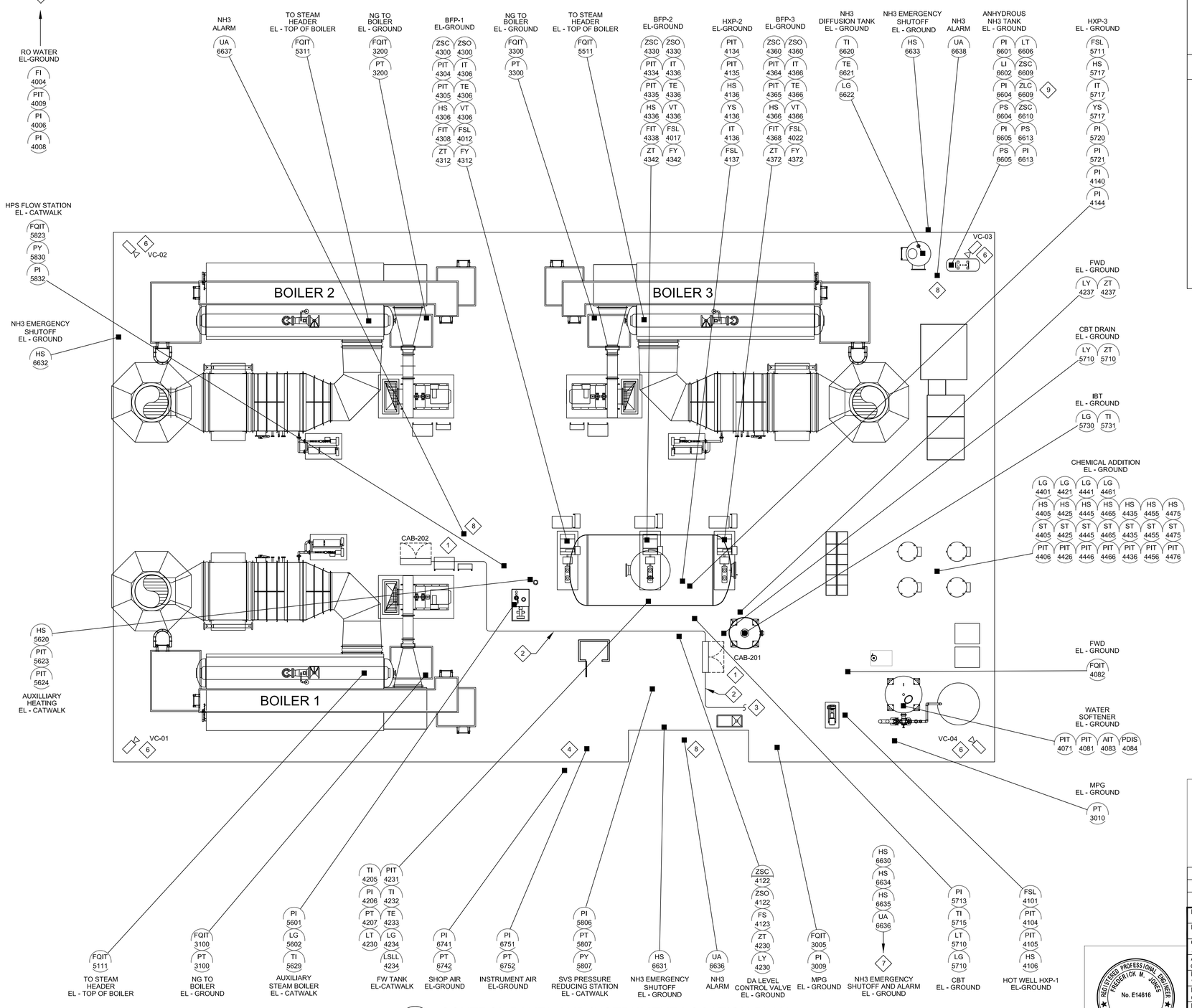

1 CONTROL PANEL AND INSTRUMENT LOCATION PLAN
SCALE: NONE

ZONE	LETTER	DESCRIPTION	DRAWN	DATE	APPRVD

REVISIONS

DRAWN R. CLARK	DATE
DESIGNED N. CAMARATA	DATE
CHECKED A. ERMI	DATE
A&E PM G.HITE	DATE
NASA PM W.LEE	DATE
REQUESTER G.RAISCHE	DATE
R&QA	DATE
SAFETY/PSM	DATE
SUPERVISOR S.FRANKEL	DATE

REGISTERED PROFESSIONAL ENGINEER FREDERICK M. JONES No. E14616 ELECTRICAL STATE OF CALIFORNIA

Ames Research Center
Moffett Field, California

REPLACE ARC JET COMPLEX SVS BOILER
INSTRUMENTATION & CONTROL

CONTROL PANEL AND INSTRUMENT LOCATION PLAN

SIZE	CAGE CODE		REV
D	25307	231-1300-J102	
SCALE NONE		INDEX	SHEET OF

FILE NAME: 231-J102.DWG 12/12/2012

DWG: P:\NASA_Ames\1 Replace Arc Jet Boiler\CAD\I&C\Sheet\231-J102.dwg Version: 18.2s (LMS Tech) User: thomasc
DATE: Dec 11, 2012 - 12:34:59 pm

DWG NO.	SH.	REV
A231-1300-J501		

BILL OF MATERIALS

ITEM	QTY	DESCRIPTION
1	AS REQD	1/2" TUBING (NOTE 1) WALL THICKNESS, 316 SS
2		1/2" TUBE X 3/4" NPT MALE CONNECTOR, 316 SS
3		1/2" TUBE UNION TEE, 316 SS
4		1/2" FNPT GLOBE VALVE WITH GRAFOIL PACKING, 316 SS
5		1/2" TUBE X 1/2" NPT MALE CONNECTOR, 316 SS
6		1/2" PULSATION DAMPNER, 316 SS
7		CONDENSATE CHAMBER, 316 SS, 1/2" FNPT CONNECTOR
8		1/2" NPT PLUG, 316 SS

SHEET NOTES

1. WALL THICKNESS: 0.049" UP TO 300° F, 500 PSIG; 0.065" ABOVE 300° F, 500 PSIG.
2. BLOWDOWN REQUIRED FOR WATER SERVICE.
3. PREFFERED INSTALLATION IS DETAIL A; WHERE 'A' CONTINUOUS SLOPE IS NOT POSSIBLE, USE DETAIL 'B'.
4. DO NOT USE FOR STEAM SERVICE.
5. CONTRACTOR IS RESPONSIBLE FOR PROVIDING ALL COMPONENTS TO ASSURE THAT INSTALLATION IS FUNCTIONAL IN ALL RESPECTS.

KEY NOTES

1. WHEN USED,TERMINATE DRAIN LINES AT FACILITY DRAIN SYSTEM.
2. KEEP THIS SECTION OF TUBING CLOSE TO PROCESS PIPE.

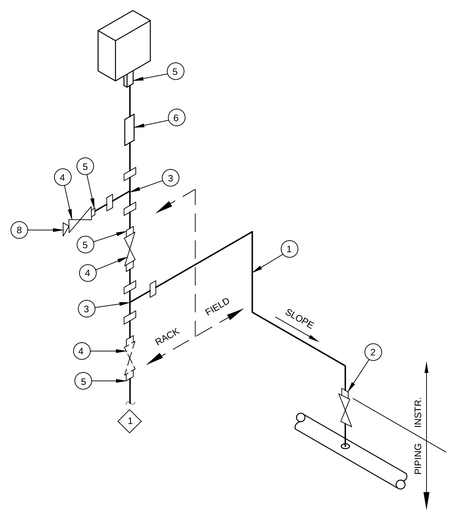

DETAIL A

PREFERRED INSTALLATION

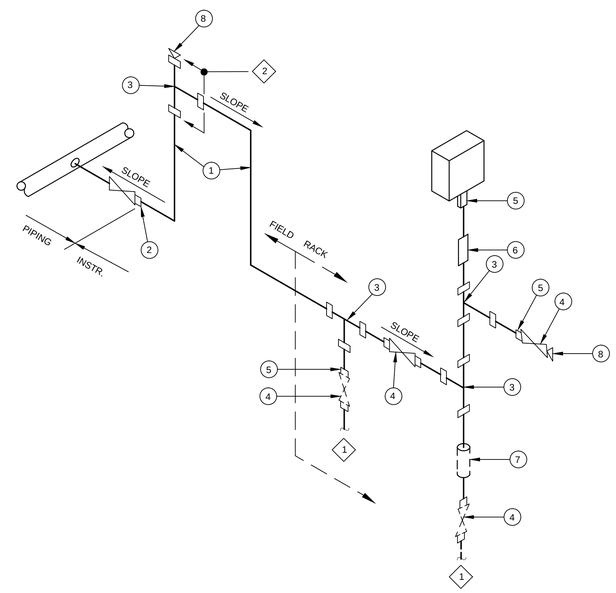

DETAIL B

ALTERNATIVE INSTALLATION

1 PRESSURE INSTRUMENTS, INSTRUMENT ABOVE TAP

SCALE: NONE

ZONE	LETTER	DESCRIPTION	DRAWN	DATE	APPRVD

REVISIONS

DRAWN R. CLARK	DATE	
DESIGNED N. CAMARATA	DATE	
CHECKED A. ERMI	DATE	
A&E PM G.HITE	DATE	
NASA PM W.LEE	DATE	
REQUESTER G.RAISCHE	DATE	
R&QA	DATE	
SAFETY/PSM	DATE	
SUPERVISOR S.FRANKEL	DATE	

REGISTERED PROFESSIONAL ENGINEER FREDERICK M. JONES No. E14616 ELECTRICAL STATE OF CALIFORNIA

Ames Research Center
Moffett Field, California

REPLACE ARC JET COMPLEX SVS BOILER
INSTRUMENTATION & CONTROL

INSTALLATION DETAIL PRESSURE INSTRUMENTS INSTRUMENT ABOVE TAP

SIZE	CAGE CODE		REV
D	25307	A 231-1300-J501	
SCALE NONE		INDEX	SHEET OF

FILE NAME: 231-J501.DWG 8/24/2012

DWG: P:\NASA Ames\1 Replace Arc Jet Boiler\CAD\I&C\Sheet\231-J501.dwg Version: 18.2s (LMS Tech) User: davisonv
DATE: Dec 10, 2012 - 4:16:37 pm

Kref SUBMISSION.dwg

DWG NO.	SH.	REV
A231-1300-J502		

BILL OF MATERIALS

ITEM	QTY	DESCRIPTION
1	AS REQD	1/2" TUBING (NOTE 1) WALL THICKNESS, 316 SS
2		1/2" TUBE X 3/4" NPT MALE CONNECTOR, 316 SS
3		1/2" TUBE UNION TEE, 316 SS
4		1/2" FNPT GLOBE VALVE WITH GRAFOIL PACKING, 316 SS
5		1/2" TUBE X 1/2" NPT MALE CONNECTOR, 316 SS
6		1/2" PULSATION DAMPNER, 316 SS
7		CONDENSATE CHAMBER, 316 SS, 1/2" FNPT CONNECTOR
8		1/2" NPT PLUG, 316 SS

SHEET NOTES

1. WALL THICKNESS: 0.049" UP TO 300° F, 500 PSIG; 0.065" ABOVE 300° F, 500 PSIG.
2. BLOWDOWN REQUIRED FOR STEAM AND WATER SERVICE.
3. PREFFERED INSTALLATION IS DETAIL A; WHERE 'A' CONTINUOUS SLOPE IS NOT POSSIBLE, USE DETAIL 'B'.
4. USE THIS DETAIL FOR STEAM SERVICE.
5. CONTRACTOR IS RESPONSIBLE FOR PROVIDING ALL COMPONENTS TO ASSURE THAT INSTALLATION IS FUNCTIONAL IN ALL RESPECTS.

KEY NOTES

1. WHERE USED,TERMINATE DRAIN LINES AT FACILITY DRAIN SYSTEM OR TRENCH.
2. KEEP THIS SECTION OF TUBING CLOSE TO PROCESS PIPE.

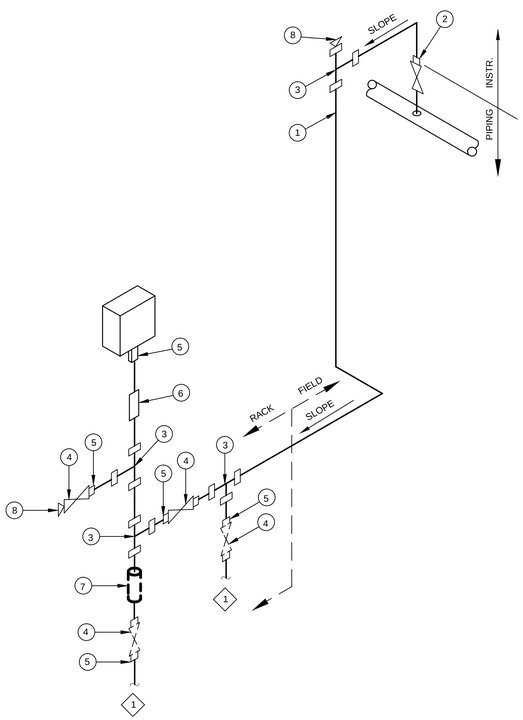

DETAIL A

PREFERRED INSTALLATION

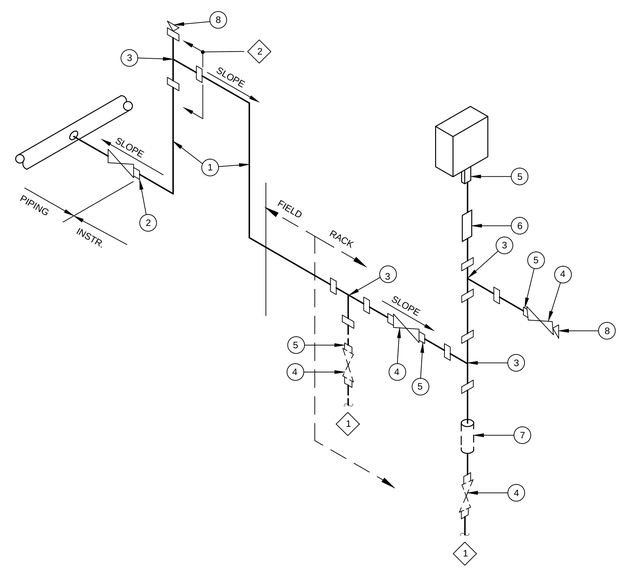

DETAIL B

ALTERNATIVE INSTALLATION

1 PRESSURE INSTRUMENTS, INSTRUMENT BELOW TAP

SCALE: NONE

ZONE	LETTER	DESCRIPTION	DRAWN	DATE	APPRVD

REVISIONS

DRAWN R. CLARK	DATE	
DESIGNED N. CAMARATA	DATE	
CHECKED A. ERMI	DATE	
A&E PM G.HITE	DATE	
NASA PM W.LEE	DATE	
REQUESTER G.RAISCHE	DATE	
R&QA	DATE	
SAFETY/PSM	DATE	
SUPERVISOR S.FRANKEL	DATE	

REGISTERED PROFESSIONAL ENGINEER FREDERICK M. JONES No. E14616 ELECTRICAL STATE OF CALIFORNIA

Ames Research Center
Moffett Field, California

REPLACE ARC JET COMPLEX SVS BOILER

INSTRUMENTATION & CONTROL

INSTALLATION DETAIL PRESSURE INSTRUMENTS INSTRUMENT BELOW TAP

SIZE	CAGE CODE		REV
D	25307	A 231-1300-J502	
SCALE NONE		INDEX	SHEET OF

FILE NAME: 231-J502.DWG 8/24/2012

DWG: P:\NASA Ames\1 Replace Arc Jet Boiler\CAD\&C\Sheet\231-J502.dwg Version: 18.2s (LMS Tech) User: davisonv
DATE: Dec 10, 2012 - 4:16:42 pm

Kref SUBMISSION.dwg

DWG NO.	SH.	REV
A231-1300-J503		

BILL OF MATERIALS

ITEM	QTY	DESCRIPTION
1	AS REQD	1/2" TUBING (NOTE 1) WALL THICKNESS, 316 SS
2		1/2" X 3" LG HEX NIPPLE, 316 SS
3		1/2" NPT PLUG, CS 3000#
4		1/2" TUBE X 1/2" NPT MALE CONNECTOR, 316 SS
5		1/2" FNPT TEE, 316 SS
6		3/4" X 1/2" NPT HEX REDUCING NIPPLE, 316 SS
7		1/2" FNPT GLOBE VALVE, SS WITH GRAFOIL PACKING
8		1/2" HEX COUPLING, 316 SS
9		1/2" SIPHON, 316 SEAMLESS SS

SHEET NOTES

1. WALL THICKNESS: 0.049" UP TO 300° F, 500 PSIG; 0.065" ABOVE 300° F, 500 PSIG.
2. CONTRACTOR IS RESPONSIBLE FOR PROVIDING ALL COMPONENTS TO ASSURE THAT INSTALLATION IS FUNCTIONAL IN ALL RESPECTS.

KEY NOTES

1 NOT USED.

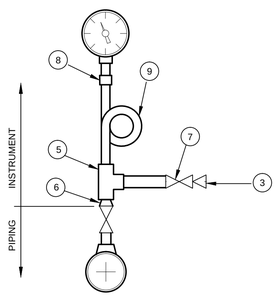

DETAIL A

SINGLE PRESSURE GAUGE

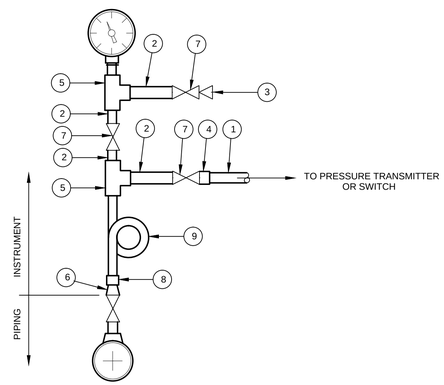

DETAIL B

PRESSURE GAUGE WITH IMPULSE
LINE TO OTHER INSTRUMENTS

1 PRESSURE GAUGES FOR STEAM SERVICE

SCALE: NONE

ZONE	LETTER	DESCRIPTION	DRAWN	DATE	APPRVD

REVISIONS

DRAWN R. CLARK	DATE
DESIGNED N. CAMARATA	DATE
CHECKED A. ERMI	DATE
A&E PM G.HITE	DATE
NASA PM W.LEE	DATE
REQUESTER G.RAISCHE	DATE
R&QA	DATE
SAFETY/PSM	DATE
SUPERVISOR S.FRANKEL	DATE

REGISTERED PROFESSIONAL ENGINEER FREDERICK M. JONES No. E14616 ELECTRICAL STATE OF CALIFORNIA

Ames Research Center
Moffett Field, California

REPLACE ARC JET COMPLEX SVS BOILER
INSTRUMENTATION & CONTROL

INSTALLATION DETAIL PRESSURE GAUGES FOR STEAM SERVICE

SIZE	CAGE CODE		REV
D	25307	A 231-1300-J503	
SCALE	NONE	INDEX	SHEET OF

FILE NAME: 231-J503.DWG 8/24/2012

DWG: P:\NASA-Ames\1 Replace Arc Jet Boiler\CAD\I&C\Sheet\231-J503.dwg Version: 18.2s (LMS Tech) User: davisonv
DATE: Dec 10, 2012 - 4:16:47 pm

Kref SUBMISSION.dwg

DWG NO.	SH.	REV
A231-1300-J504		

SHEET NOTES

1. CONTRACTOR IS RESPONSIBLE FOR PROVIDING ALL COMPONENTS TO ASSURE THAT INSTALLATION IS FUNCTIONAL IN ALL RESPECTS.

KEY NOTES

1 INSTALLATION IN VERTICAL RUN PIPES IS ALSO ACCEPTABLE. (METER MUST ALWAYS BE PERPENDICULAR TO THE PIPE).

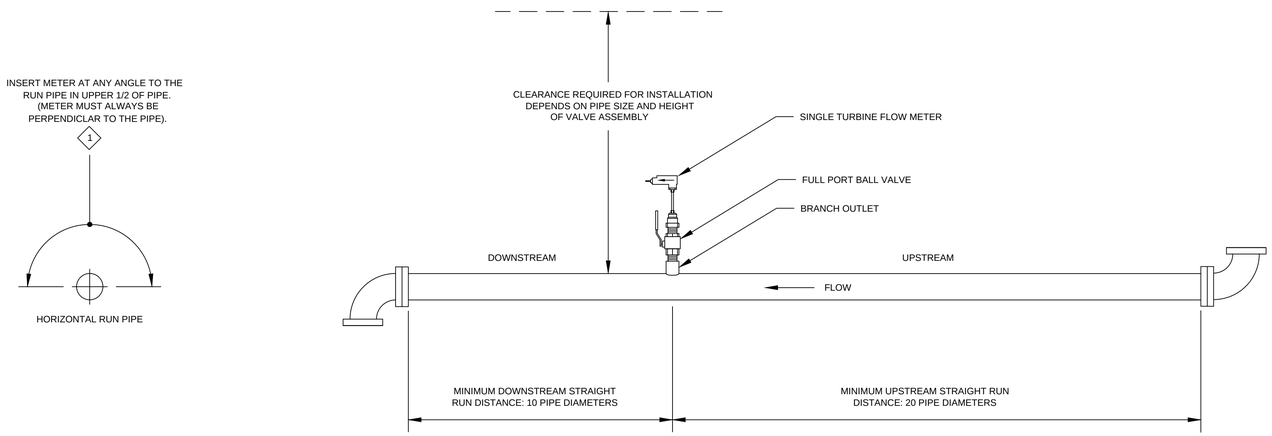

FIGURE 1

SINGLE TURBINE FLOW METER INSTALLATION LAYOUT

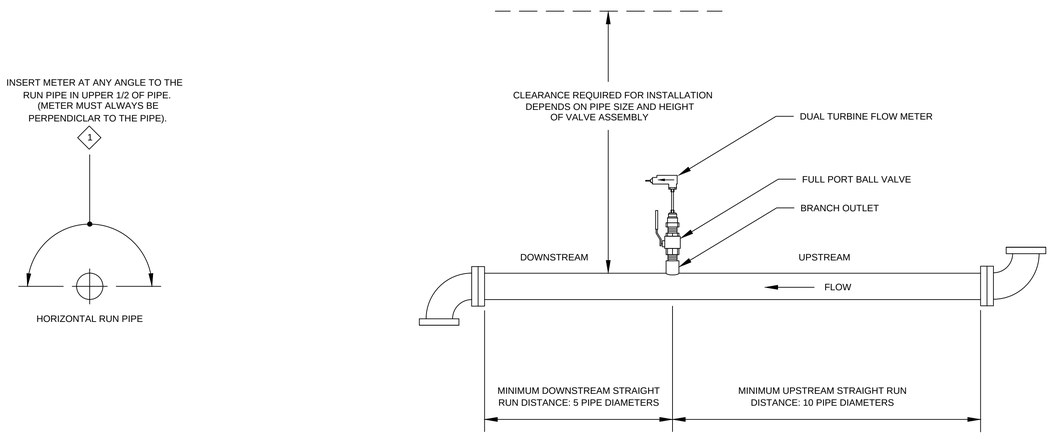

FIGURE 2

DUAL TURBINE FLOW METER INSTALLATION LAYOUT

1 TURBINE FLOW METER
SCALE: NONE

REGISTERED PROFESSIONAL ENGINEER FREDERICK M. JONES No. E14616 ELECTRICAL STATE OF CALIFORNIA

ZONE	LETTER	DESCRIPTION	DRAWN	DATE	APPRVD

REVISIONS

DRAWN R. CLARK	DATE
DESIGNED N. CAMARATA	DATE
CHECKED A. ERMI	DATE
A&E PM G.HITE	DATE
NASA PM W.LEE	DATE
REQUESTER G.RAISCHE	DATE
R&QA	DATE
SAFETY/PSM	DATE
SUPERVISOR S.FRANKEL	DATE

Ames Research Center
Moffett Field, California

REPLACE ARC JET COMPLEX SVS BOILER
INSTRUMENTATION & CONTROL

INSTALLATION DETAIL TURBINE FLOW METER

SIZE	CAGE CODE		REV
D	25307	A 231-1300-J504	
SCALE NONE		INDEX	SHEET OF

FILE NAME: 231-J504.DWG 8/24/2012

DWG: P:\NASA Ames\1 Replace Arc Jet Boiler\CAD\I&C\Sheet\231-J504.dwg Version: 18.2s (LMS Tech) User: davisonv
DATE: Dec 10, 2012 - 4:16:52 pm

DWG NO.	SH.	REV
A231-1300-J505		

BILL OF MATERIALS

ITEM	QTY	DESCRIPTION
1	2	ADAPTER FOR WELDING 1/2" TUBE INTO 3/4" SW ROOT VALVE, 316 SS
2	AS REQD	1/2" OD TUBING, 0.065" WALL, 316 SS
3	8	1/2" TUBE UNION TEE, 316 SS
4	20	1/2" TUBE X 1/2" NPT MALE CONNECTOR, 316 SS
5	4	1/2" FNPT GLOBE VALVE WITH TEFLON PACKING, 316 SS
6	2	1/2" TUBE CAP, 316 SS
7	2	THREE VALVE MANIFOLD, ANDERSON GREENWOOD MODEL M1HPS-4-XP

SHEET NOTES

1. TERMINATE DRAIN LINES 6" ABOVE FLOOR.
2. CONTRACTOR IS RESPONSIBLE FOR PROVIDING ALL COMPONENTS TO ASSURE THAT INSTALLATION IS FUNCTIONAL IN ALL RESPECTS.

KEY NOTES

1. THESE INSTRUMENTS MAY BE INSTALLED LOWER THAN THE STANDARD DISTANCE ABOVE FLOOR LEVEL SO THAT THE INSTRUMENT IS BELOW THE TAP.

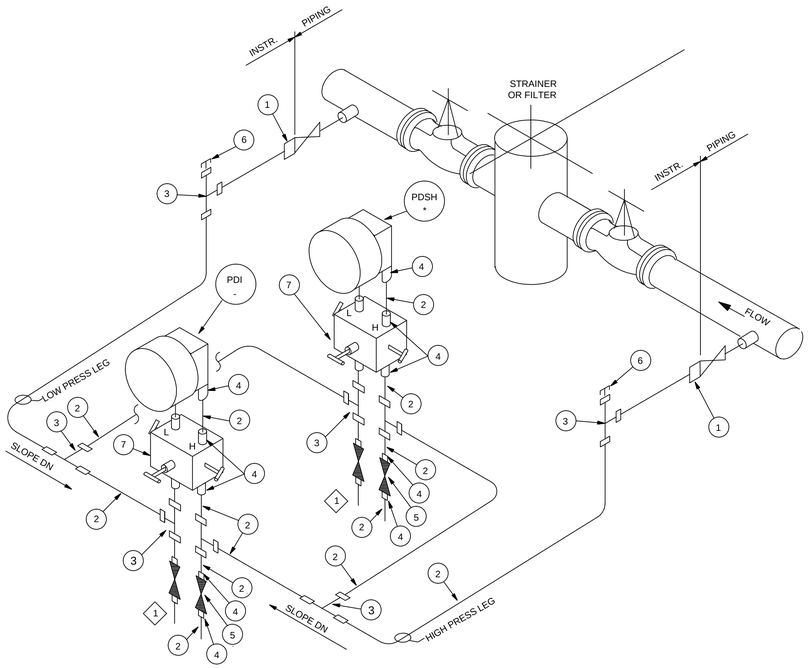

1 DIFFERENTIAL PRESSURE SWITCH/GAUGE ACROSS STRAINER

SCALE: NONE

ZONE	LETTER	DESCRIPTION	DRAWN	DATE	APPRVD

REVISIONS

DRAWN R. CLARK	DATE	
DESIGNED N. CAMARATA	DATE	
CHECKED A. ERMI	DATE	
A&E PM G.HITE	DATE	
NASA PM W.LEE	DATE	
REQUESTER G.RAISCHE	DATE	
R&QA	DATE	
SAFETY/PSM	DATE	
SUPERVISOR S.FRANKEL	DATE	

REGISTERED PROFESSIONAL ENGINEER FREDERICK M. JONES No. E14616 ELECTRICAL STATE OF CALIFORNIA

Ames Research Center
Moffett Field, California

REPLACE ARC JET COMPLEX SVS BOILER
INSTRUMENTATION & CONTROL

INSTALLATION DETAIL DIFFERENTIAL PRESSURE SWITCH/ GAUGE ACROSS STRAINER

SIZE	CAGE CODE		REV
D	25307	A 231-1300-J505	
SCALE NONE		INDEX	SHEET OF

FILE NAME: 231-J505.DWG 8/24/2012

DWG: P:\NASA Ames\1 Replace Arc Jet Boiler\CAD\I&C\Sheet\231-J505.dwg Version: 18.2s (LMS Tech) User: davisonv
DATE: Dec 10, 2012 - 4:16:57 pm

DWG NO.	SH.	REV
A231-1300-J506		

SHEET NOTES

1. SEE PIPING MATERIAL SPECIFICATION FOR PIPE FITTING AND FLANGE MATERIALS AND RATINGS.
2. DETAILS SHOWN ARE HORIZONTAL FLOW. SAME DETAIL ROTATED 90° APPLY TO VERTICAL FLOW.
3. THESE DETAILS COVER INSTALLATION FOR THE FOLLOWING THERMOWELLS: BI-METAL THERMOMETER, THERMOCOUPLES TEST WELLS AND RTD'S.
4. GASKETS, BOLTS AND NUTS FURNISHED BY PIPING.
5. NON-STANDARD ITEMS, SUCH AS SPECIAL THERMOCOUPLE ASSEMBLY, WELLS FOR FILLED BULB SYSTEMS, ETC ARE NOT COVERED BY THE TABLE ON THIS DRAWING.
6. THERMOWELL LENGTH FOR VESSELS AND STORAGE TANKS TO BE DETERMINED FOR EACH APPLICATION.
7. CONTRACTOR IS RESPONSIBLE FOR PROVIDING ALL COMPONENTS TO ASSURE THAT INSTALLATION IS FUNCTIONAL IN ALL RESPECTS.

KEY NOTES

1. NOT USED.

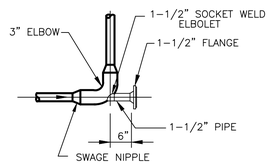

FIGURE 1
LINE 2" AND SMALLER
PREFERRED

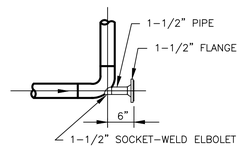

FIGURE 2
LINE 3" AND LARGER
PREFERRED

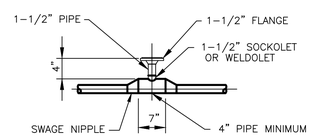

FIGURE 3
LINE 3" AND LARGER
FOR USE ONLY WHEN OTHER DETAILS ARE IMPRACTICAL

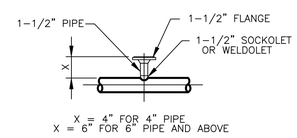

FIGURE 4
LINE 4" AND LARGER
FOR USE ONLY WHEN OTHER DETAILS ARE IMPRACTICAL

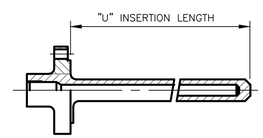

FLANGE THERMOWELL

REQUIRED THERMOWELL "U" DIMENSION IN INCHES VERSUS PIPE LINE SIZE

LINE SIZE	1"	1.5"	2"	3"	4"	6"	8"	10"	12"	14"	16"	18"	20"	24"
FIGURE 1	10"	10"	10"											
2				10"	10"	10"	13"	13"	13"	16"	16"	16"	16"	16"
3	7"	7"	7"	7"										
4					7"	10"	13"	13"	13"	16"	16"	16"	16"	16"

1 TEMPERATURE INSTRUMENTS CONNECTIONS, FLANGED
SCALE: NONE

ZONE	LETTER	DESCRIPTION	DRAWN	DATE	APPRVD

REVISIONS

DRAWN R. CLARK	DATE
DESIGNED N. CAMARATA	DATE
CHECKED A. ERMI	DATE
A&E PM G.HITE	DATE
NASA PM W.LEE	DATE
REQUESTER G.RAISCHE	DATE
R&QA	DATE
SAFETY/PSM	DATE
SUPERVISOR S.FRANKEL	DATE

REGISTERED PROFESSIONAL ENGINEER
FREDERICK M. JONES
No. E14616
ELECTRICAL
STATE OF CALIFORNIA

Ames Research Center
Moffett Field, California

REPLACE ARC JET COMPLEX SVS BOILER
INSTRUMENTATION & CONTROL

INSTALLATION DETAIL TEMPERATURE INSTRUMENTS CONNECTIONS, FLANGED

SIZE	CAGE CODE		REV
D	25307	A 231-1300-J506	
SCALE NONE		INDEX	SHEET OF

FILE NAME: 231-J506.DWG 8/24/2012

DWG: P:\NASA Ames\1 Replace Arc Jet Boiler\CAD\8C\Sheet\231-J506.dwg Version: 18.2s (LMS Tech) User: davisonv
DATE: Dec 10, 2012 - 4:17:02 pm

Xref SUBMISSION.dwg

DWG NO.	SH.	REV
A231-1300-J507		

SHEET NOTES

1. SEE PIPING MATERIAL SPECIFICATION FOR PIPE FITTING AND FLANGE MATERIALS AND RATINGS.
2. DETAILS SHOWN ARE HORIZONTAL FLOW. SAME DETAIL ROTATED 90° APPLY TO VERTICAL FLOW.
3. THESE DETAILS COVER INSTALLATION FOR THE FOLLOWING THERMOWELLS: BI-METAL THERMOMETER, THERMOCOUPLES TEST WELLS AND RTD'S.
4. NON-STANDARD ITEMS, SUCH AS SPECIAL THERMOCOUPLE ASSEMBLY, WELLS FOR FILLED BULB SYSTEMS, ETC ARE NOT COVERED BY THE TABLE ON THIS DRAWING.
5. THERMOWELL LENGTH FOR VESSELS AND STORAGE TANKS TO BE DETERMINED FOR EACH APPLICATION.
6. CONTRACTOR IS RESPONSIBLE FOR PROVIDING ALL COMPONENTS TO ASSURE THAT INSTALLATION IS FUNCTIONAL IN ALL RESPECTS.

KEY NOTES

1. NOT USED.

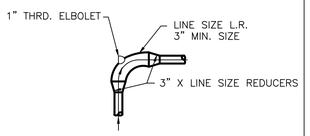

FIGURE 1
LINE 2" AND SMALLER
PREFERRED

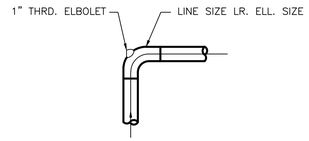

FIGURE 2
LINE 3" AND LARGER
PREFERRED

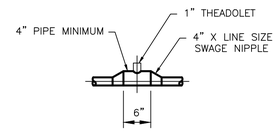

FIGURE 3
LINE 3" AND SMALLER
FOR USE ONLY WHEN OTHER DETAILS ARE IMPRACTICAL

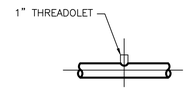

FIGURE 4
LINE 4" AND LARGER
FOR USE ONLY WHEN OTHER DETAILS ARE IMPRACTICAL

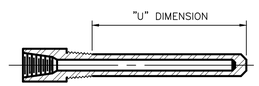

THREADED THERMOWELL, GENERAL TYPE

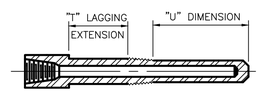

THREADED THERMOWELL, LAGGING EXTENSION TYPE

REQUIRED THERMOWELL "U" DIMENSION IN INCHES VERSUS PIPE LINE SIZE

LINE SIZE	0.75"	1"	1.5"	2"	3"	4"	6"	8"	10"	12"	14"	16"	18"	20"	24"
FIGURE 1	4.5"	4.5"	4.5"	4.5"											
2					4.5"	7.5"	10.5"	10.5"	13.5"	13.5"	13.5"	13.5"	13.5"	13.5"	13.5"
3	2.5"	2.5"	2.5"	2.5"	2.5"										
4						4.5"	4.5"	7.5"	7.5"	7.5"	7.5"	10.5"	10.5"	13.5"	13.5"

1 TEMPERATURE INSTRUMENTS CONNECTIONS, THREADED
SCALE: NONE

ZONE	LETTER	DESCRIPTION	DRAWN	DATE	APPRVD

REVISIONS

DRAWN R. CLARK	DATE	
DESIGNED N. CAMARATA	DATE	
CHECKED A. ERMI	DATE	
A&E PM G.HITE	DATE	
NASA PM W.LEE	DATE	
REQUESTER G.RAISCHE	DATE	
R&QA	DATE	
SAFETY/PSM	DATE	
SUPERVISOR S.FRANKEL	DATE	

REGISTERED PROFESSIONAL ENGINEER FREDERICK M. JONES No. E14616 ELECTRICAL STATE OF CALIFORNIA

Ames Research Center
Moffett Field, California

REPLACE ARC JET COMPLEX SVS BOILER
INSTRUMENTATION & CONTROL

INSTALLATION DETAIL TEMPERATURE INSTRUMENTS CONNECTIONS, THREADED

SIZE	CAGE CODE	
D	25307	A 231-1300-J507 REV
SCALE NONE	INDEX	SHEET OF

FILE NAME: 231-J507.DWG 8/24/2012

DWG: P:\NASA Ames\1 Replace Arc Jet Boiler\CAD\I&C\Sheet\231-J507.dwg Version: 18.2s (LMS Tech) User: davisonv
DATE: Dec 10, 2012 - 4:17:07 pm

Kref SUBMISSION.dwg

DWG NO.	SH.	REV
A231-1300-J508		

BILL OF MATERIALS

ITEM	QTY	DESCRIPTION
1	2	NOZZLE 2"
2	2	BLOCK VALVE 2"
3	2	SPACER OR SWAGE 2"
4	2	BLIND FLANGE 2" OR 3"
5	2	BLEED VALVE 1/2"

SHEET NOTES

1. TRANSMITTER MUST BE ACCESSIBLE FROM PLATFORM.
2. CONTRACTOR IS RESPONSIBLE FOR PROVIDING ALL COMPONENTS TO ASSURE THAT INSTALLATION IS FUNCTIONAL IN ALL RESPECTS.

KEY NOTES

1. CAPILLARY TUBING SHOULD BE ADEQUATELY SUPPORTED.

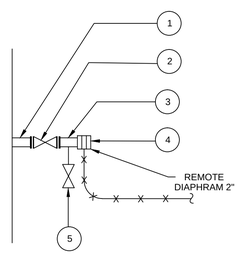

DETAIL A

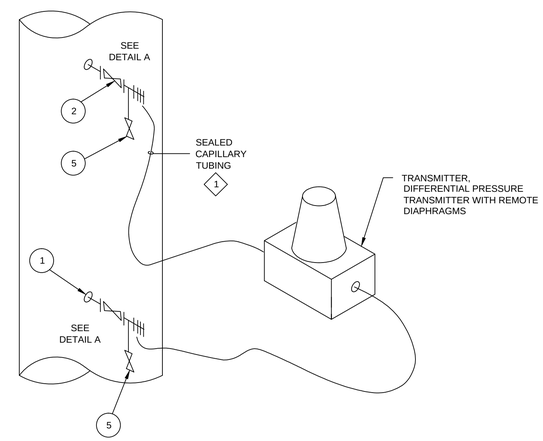

1 DIFFERENTIAL PRESSURE TRANSMITTER WITH REMOTE DIAPHRAMS
SCALE: NONE

ZONE	LETTER	DESCRIPTION	DRAWN	DATE	APPRVD

REVISIONS

DRAWN R. CLARK	DATE	
DESIGNED N. CAMARATA	DATE	
CHECKED A. ERMI	DATE	
A&E PM G.HITE	DATE	
NASA PM W.LEE	DATE	
REQUESTER G.RAISCHE	DATE	
R&QA	DATE	
SAFETY/PSM	DATE	
SUPERVISOR S.FRANKEL	DATE	

Ames Research Center
Moffett Field, California

REPLACE ARC JET COMPLEX SVS BOILER
INSTRUMENTATION & CONTROL

INSTALLATION DETAIL DIFFERENTIAL PRESSURE TRANSMITTER WITH REMOTE DIAPHRAMS

SIZE	CAGE CODE		REV
D	25307	231-1300-J508	A
SCALE NONE		INDEX	SHEET OF

FILE NAME: 231-J508.DWG 8/24/2012

REGISTERED PROFESSIONAL ENGINEER FREDERICK M. JONES No. E14616 ELECTRICAL STATE OF CALIFORNIA

DWG: P:\NASA Ames\1 Replace Arc Jet Boiler\CAD\I&C\Sheet\231-J508.dwg Version: 18.2s (LMS Tech) User: davisonv
DATE: Dec 10, 2012 - 4:17:12 pm

DWG NO.	SH.	REV
A231-1300-J509		

BILL OF MATERIALS

ITEM	QTY	DESCRIPTION
1	AS REQD	3/4" PIPING, SCHEDULE 80, CS
2	1	1/2" NPT PLUG, CS
3	1	1/2" PIPE TEE, 3000# SS
4	AS REQD	TUBING, 1/2" O.D., 0.049 WALL
5	1	GATE VALVE, 3", 150# RF
6	1	TRANSMITTER WITH 3", 150# RF FLANGE CONNECTION
7	AS REQD	1/2" TUBE X 1/2" NPT MALE CONNECTOR, SS
8	1	SWAGE NIPPLE, 3/4" X 1/2", CS
9	AS REQD	TUBING 1/4" (OR BUG SCREEN WHERE REQUIRED)
10	1	CONDENSATE CHAMBER (WHERE REQUIRED)
11	1	GLOBE VALVE, 1/2", WITH GRAFOIL PACKING, SS
12	1	1/2" TUBE UNION TEE, SS

SHEET NOTES

1. CONTRACTOR IS RESPONSIBLE FOR PROVIDING ALL COMPONENTS TO ASSURE THAT INSTALLATION IS FUNCTIONAL IN ALL RESPECTS.

KEY NOTES

1. TERMINATE DRAIN LINES 6" ABOVE FLOOR.

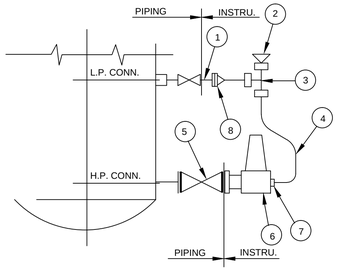

DETAIL A

PRESSURIZED VESSEL WET LOW PRESSURE LEG

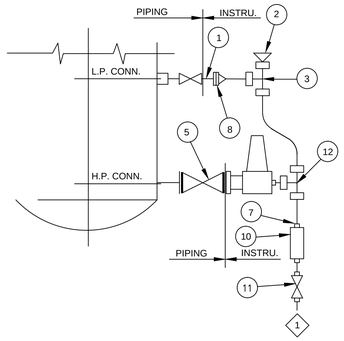

DETAIL B

PRESSURIZED VESSEL DRY LOW PRESSURE LEG

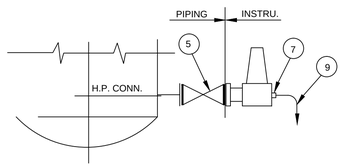

DETAIL C

OPEN OR VENTED TANK

1 FLANGED DIFFERENTIAL PRESSURE TYPE LEVEL TRANSMITTER

SCALE: NONE

ZONE	LETTER	DESCRIPTION	DRAWN	DATE	APPRVD

REVISIONS

DRAWN R. CLARK	DATE
DESIGNED N. CAMARATA	DATE
CHECKED A. ERMI	DATE
A&E PM G.HITE	DATE
NASA PM W.LEE	DATE
REQUESTER G.RAISCHE	DATE
R&QA	DATE
SAFETY/PSM	DATE
SUPERVISOR S.FRANKEL	DATE

REGISTERED PROFESSIONAL ENGINEER FREDERICK M. JONES No. E14616 ELECTRICAL STATE OF CALIFORNIA

Ames Research Center
Moffett Field, California

REPLACE ARC JET COMPLEX SVS BOILER
INSTRUMENTATION & CONTROL

INSTALLATION DETAIL FLANGED DIFFERENTIAL PRESSURE TYPE LEVEL TRANSMITTER

SIZE	CAGE CODE		REV
D	25307	A 231-1300-J509	
SCALE NONE		INDEX	SHEET OF

FILE NAME: 231-J509.DWG 8/24/2012

DWG: P:\NASA Ames\1 Replace Arc Jet Boiler\CAD\I&C\Sheet\231-J509.dwg Version: 18.2s (LMS Tech) User: davisonv
DATE: Dec 10, 2012 - 4:17:17 pm

DWG NO.	SH.	REV
A231-1300-J510		

BILL OF MATERIALS

ITEM	QTY	DESCRIPTION
1	AS REQD	3/4" PIPING, SCHEDULE 80, CS
2	2	1/2" PIPE TEE, 3000#, SS
3	2	SWAGE NIPPLE, 3/4" X 1/2", CS
4	AS REQD	TUBING, 1/2" O.D., 0.049 WALL
5	2	1/2" TUBE UNION TEE, SS
6	2	1/2" NPT PLUG, CS
7	1	3 VALVE MANIFOLD SUPPLIED WITH TRANSMITTER
8	6	1/2" TUBE X 1/2" NPT MALE CONNECTOR, SS
9	2	1/2" FNPT GATE VALVE WITH GRAFOIL PACKING, SS
10	1	CONDENSATE CHAMBER (WHERE REQUIRED)

SHEET NOTES

1. ALL TUBING SHALL HAVE CONTINUOUS SLOPE TO INSTRUMENT.
2. CONTRACTOR IS RESPONSIBLE FOR PROVIDING ALL COMPONENTS TO ASSURE THAT INSTALLATION IS FUNCTIONAL IN ALL RESPECTS.

KEY NOTES

1. TERMINATE DRAIN LINES 6" ABOVE FLOOR.

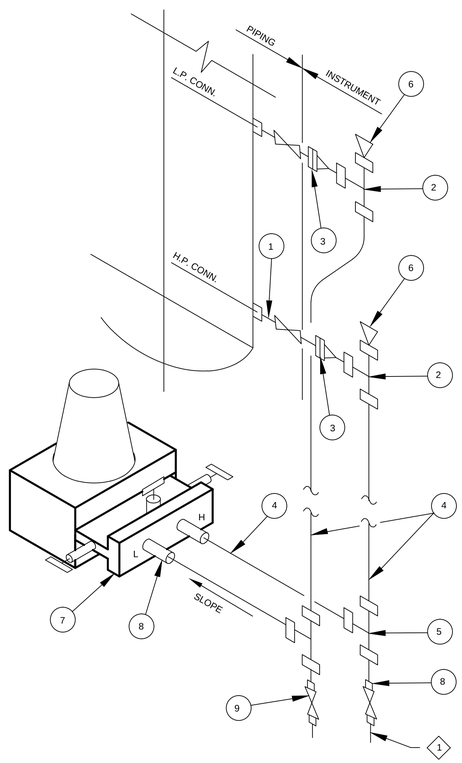

DETAIL A

WET LOW PRESSURE LEG

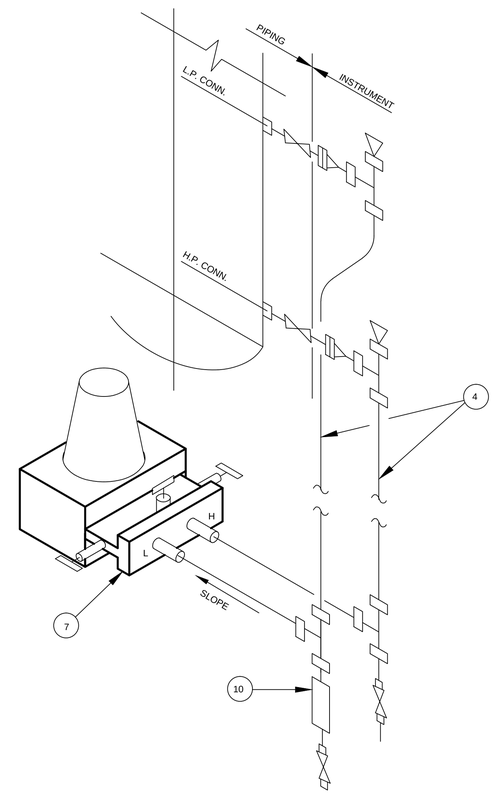

DETAIL B

DRY LOW PRESSURE LEG
ALL PIPING SAME AS DETAIL "A"
(EXCEPT AS NOTED)

1 DIFFERENTIAL PRESSURE TYPE LEVEL TRANSMITTER, REMOTE FROM CONNECTIONS

SCALE: NONE

REGISTERED PROFESSIONAL ENGINEER FREDERICK M. JONES No. E14616 ELECTRICAL STATE OF CALIFORNIA

ZONE	LETTER	DESCRIPTION	DRAWN	DATE	APPRVD

REVISIONS

DRAWN R. CLARK	DATE
DESIGNED N. CAMARATA	DATE
CHECKED A. ERMI	DATE
A&E PM G.HITE	DATE
NASA PM W.LEE	DATE
REQUESTER G.RAISCHE	DATE
R&QA	DATE
SAFETY/PSM	DATE
SUPERVISOR S.FRANKEL	DATE

Ames Research Center
Moffett Field, California

REPLACE ARC JET COMPLEX SVS BOILER
INSTRUMENTATION & CONTROL

INSTALLATION DETAIL
DIFFERENTIAL TYPE LEVEL TRANSMITTER REMOTE FROM CONNECTIONS

SIZE	CAGE CODE	REV
D	25307	A 231-1300-J510
SCALE NONE	INDEX	SHEET OF

FILE NAME: 231-J510.DWG 8/24/2012

DWG: P:\NASA Ames\1 Replace Arc Jet Boiler\CAD\I&C\Sheet\231-J510.dwg Version: 18.2s (LMS Tech) User: davisonv
DATE: Dec 10, 2012 - 4:17:22 pm

DWG NO.	SH.	REV
A231-1300-J511		

BILL OF MATERIALS

ITEM	QTY	DESCRIPTION
1	15	2" - ASTM A106 GR.B SMALL PIPE, SCHEDULE 80
2	2	2" - 3000# CS ELBOW 90° SW
3	2	3/4" - 3000# CS THREADED CAP
4	2	3/4" X 3" LG PIPE NIPPLE THREADED
5	2	3/4" GATE VALVE VOGT 12111, SW
6	2	2" X 3/4" SWAGE NIPPLE, SW
7	6	1" GATE VALVE VOGT 12111, THREADED
8	2	2" - 3000# FS SOCKOLET
9	2	2" GATE VALVE VOGT 12111,SW
10	15	1" - ASTM A106 GR.B SMALL PIPE, SCHEDULE 80
11	3	1" - 3000# CS TEE THREADED
12	3	1/2" GATE VALVE VOGT 12111
13	3	1/2" X 3" LARGE PIPE NIPPLE THREADED
14	6	1" - 3000# FS UNION THREADED
15	6	1" - 3000# FS SOCKOLET
16	3	1" X 1/2" SWAGE NIPPLE THREADED
17	3	1/2" - 3000# CS TEE THREADED CAP
18	6	2" - 3000# FS UNION SW

SHEET NOTES

1. TOTAL NUMBER OF SWITCHES SHALL BE DETERMINED BY OPERATING REQUIREMENT. REFER TO P&ID DIAGRAMS.
2. STAND PIPE SHALL BE PROPERLY SUPPORTED IN THE FIELD TO PREVENT MOVEMENT.
3. CONTRACTOR IS RESPONSIBLE FOR PROVIDING ALL COMPONENTS TO ASSURE THAT INSTALLATION IS FUNCTIONAL IN ALL RESPECTS.

KEY NOTES

1. NOT USED.

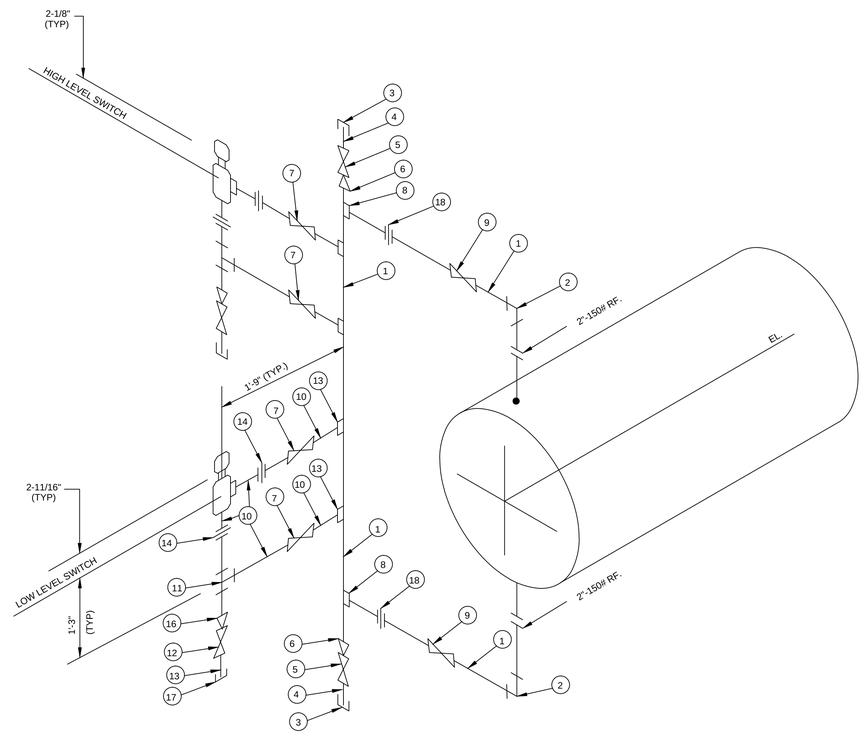

1 LEVEL SWITCHES ON A STAND PIPE HORIZONTAL VESSEL
SCALE: NONE

ZONE	LETTER	DESCRIPTION	DRAWN	DATE	APPRVD

REVISIONS

DRAWN R. CLARK	DATE
DESIGNED N. CAMARATA	DATE
CHECKED A. ERMI	DATE
A&E PM G.HITE	DATE
NASA PM W.LEE	DATE
REQUESTER G.RAISCHE	DATE
R&QA	DATE
SAFETY/PSM	DATE
SUPERVISOR S.FRANKEL	DATE

REGISTERED PROFESSIONAL ENGINEER FREDERICK M. JONES No. E14616 ELECTRICAL STATE OF CALIFORNIA

Ames Research Center
Moffett Field, California

REPLACE ARC JET COMPLEX SVS BOILER
INSTRUMENTATION & CONTROL

INSTALLATION DETAIL LEVEL SWITCHES ON A STAND PIPE HORIZONTAL VESSEL

SIZE	CAGE CODE		REV
D	25307	A 231-1300-J511	
SCALE NONE		INDEX	SHEET OF

FILE NAME: 231-J511.DWG 8/24/2012

DWG: P:\NASA Ames\1 Replace Arc Jet Boiler\CAD\I&C\Sheet\231-J511.dwg Version: 18.2s (LMS Tech) User: davisonv
DATE: Dec 10, 2012 - 4:17:27 pm

DWG NO.	SH.	REV
A231-1300-J512		

BILL OF MATERIALS

ITEM	QTY	DESCRIPTION
1	AS REQD	2" - ASTM A106 GR- SMALL PIPE CS SCHEDULE 80
2	2	2" - 3000# CS ELBOW 90°SW
3	2	3/4" - 3000# CS THREADED CAP
4	2	3/4" X 3" PIPE NIPPLE SCHEDULE 80 THREADED
5	2	3/4" GATE VALVE VOGT 12111
6	2	2" X 3/4" SWAGE NIPPLE, TOE
7	2	3/4" - 3000# COUPOLET
8	2	2" - 3000# SOCKOLET
9	2	2" GATE VALVE VOGT 12111
10	4	1/2" X 3" LG PIPE NIPPLE SCHEDULE 80
11	2	1/2" GATE VALVE VOGT 12111
12	2	1/2" - 3000# THREADED CAP

SHEET NOTES

1. GAUGES SHALL BE EQUIPPED WITH ILLUMINATORS AS REQUIRED.
2. TOTAL NUMBER OF GAUGES SHALL BE DETERMINED BY VISIBLE LENGTH.
3. DETAILS SHOWN FOR ONE GAUGE ONLY (TYPICAL). REFER TO BILL OF MATERIALS FOR TOTAL QUANTITY.
4. STANDPIPE SHALL BE PROPERLY SUPPORTED IN THE FIELD TO PREVENT MOVEMENT.
5. LOW PRESSURE APPLICATION MEANS PRESSURE AND TEMPERATURE RATINGS LIMITED BY ASA FLANGE RATING FOR 150#.
6. CONTRACTOR IS RESPONSIBLE FOR PROVIDING ALL COMPONENTS TO ASSURE THAT INSTALLATION IS FUNCTIONAL IN ALL RESPECTS.

KEY NOTES

1. DIMENSIONS TO BE DETERMINED DURING DESIGN.
2. GAUGE FACE SHALL BE INSTALLED TO THE BEST ORIENTATION FOR VIEWING BY OPERATOR..

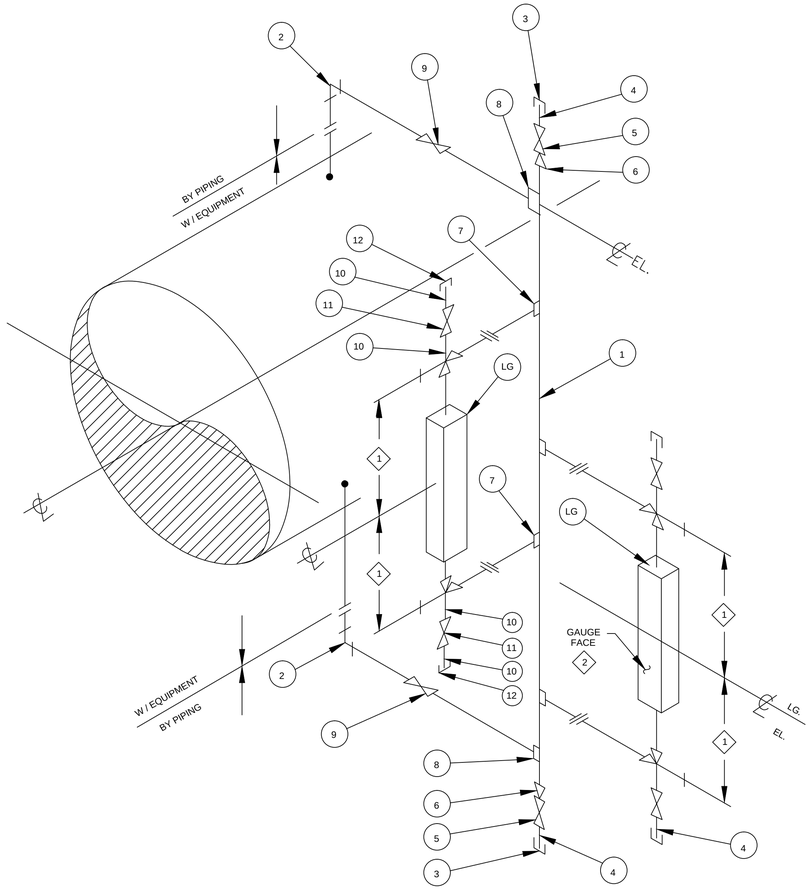

1 LEVEL GAUGES ON STAND PIPE HORIZONTAL VESSEL, LOW PRESSURE
SCALE: NONE

REGISTERED PROFESSIONAL ENGINEER FREDERICK M. JONES No. E14616 ELECTRICAL STATE OF CALIFORNIA

ZONE	LETTER	DESCRIPTION	DRAWN	DATE	APPRVD

REVISIONS

DRAWN R. CLARK	DATE	
DESIGNED N. CAMARATA	DATE	
CHECKED A. ERMI	DATE	
A&E PM G.HITE	DATE	
NASA PM W.LEE	DATE	
REQUESTER G.RAISCHE	DATE	
R&QA	DATE	
SAFETY/PSM	DATE	
SUPERVISOR S.FRANKEL	DATE	

Ames Research Center
Moffett Field, California

REPLACE ARC JET COMPLEX SVS BOILER
INSTRUMENTATION & CONTROL

INSTALLATION DETAIL
LEVEL GAUGES ON STAND PIPE HORIZONTAL VESSEL, LOW PRESSURE

SIZE	CAGE CODE		REV
D	25307	A 231-1300-J512	
SCALE NONE		INDEX	SHEET OF

FILE NAME: 231-J512.DWG 8/24/2012

DWG: P:\NASA Ames\1 Replace Arc Jet Boiler\CAD\I&C\Sheet\231-J512.dwg Version: 18.2s (LMS Tech) User: davisonv
DATE: Dec 10, 2012 - 4:17:32 pm

DWG NO.	SH.	REV
A231-1300-J513		

BILL OF MATERIALS

ITEM	QTY	DESCRIPTION
1	AS REQD	2"-ASTM A106 GR- SMALL PIPE CS SCHEDULE 80.
2	2	3/4"-3000# CS THREADED CAP.
3	2	3/4" X 3" PIPE NIPPLE SCHEDULE 80 THREADED.
4	2	3/4" GATE VALVE VOGT 12111
5	2	2" X 3/4" SWAGE NIPPLE, TOE.
6	2	3/4"-3000# COUPLET.
7	2	2"-3000# SOCKLET.
8	4	1/2" X 3" LG. PIPE NIPPLE SCHEDULE 80.
9	2	3/4" NPT PIPE UNION
10	2	1/2" GATE VALVE VOGT 12111
11	2	1/2"-3000# THREADED CAP.

SHEET NOTES

1. PIPE SHALL BE SUPPORTED IN THE FIELD TO PREVENT MOVEMENT.
2. TERMINATE DRAIN LINES 6" ABOVE FLOOR, NOT GRADE.
3. CONTRACTOR IS RESPONSIBLE FOR PROVIDING ALL COMPONENTS TO ASSURE THAT INSTALLATION IS FUNCTIONAL IN ALL RESPECTS.

KEY NOTES

1. LEVEL GAUGE FACE SHALL BE INSTALLED TO THE BEST ORIENTATION FOR VIEWING BY OPERATOR.

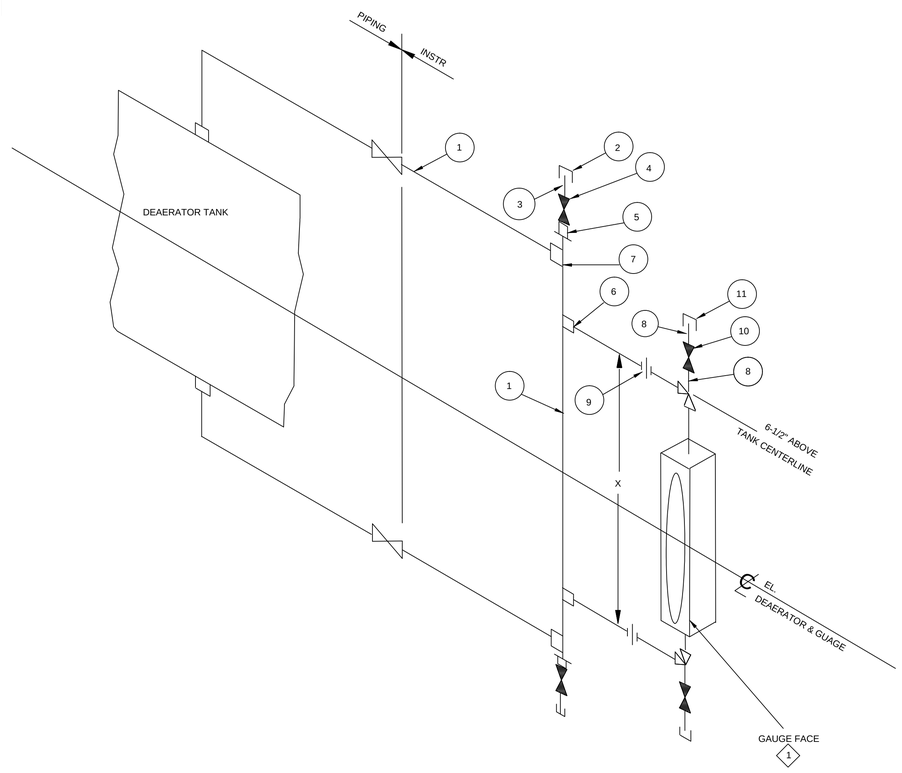

1 DEAERATOR LEVEL GAUGE
SCALE: NONE

ZONE	LETTER	DESCRIPTION	DRAWN	DATE	APPRVD

REVISIONS

DRAWN R. CLARK	DATE
DESIGNED N. CAMARATA	DATE
CHECKED A. ERMI	DATE
A&E PM G.HITE	DATE
NASA PM W.LEE	DATE
REQUESTER G.RAISCHE	DATE
R&QA	DATE
SAFETY/PSM	DATE
SUPERVISOR S.FRANKEL	DATE

REGISTERED PROFESSIONAL ENGINEER FREDERICK M. JONES No. E14616 ELECTRICAL STATE OF CALIFORNIA

Ames Research Center
Moffett Field, California

REPLACE ARC JET COMPLEX SVS BOILER
INSTRUMENTATION & CONTROL

INSTALLATION DETAIL DEAERATOR LEVEL GAUGE

SIZE	CAGE CODE		REV
D	25307	A 231-1300-J513	
SCALE NONE		INDEX	SHEET OF

FILE NAME: 231-J513.DWG 8/24/2012

DWG: P:\NASA Ames\1 Replace Arc Jet Boiler\CAD\I&C\Sheet\231-J513.dwg Version: 18.2s (LMS Tech) User: davisonv
DATE: Dec 10, 2012 - 4:17:37 pm

DWG NO.	SH.	REV
A231-1300-J514		

SHEET NOTES

1. IF STRAIGHT RUN REQUIREMENTS CANNOT BE MET, INSTALL FLOW CONDITIONING EQUIPMENT UPSTREAM OF THE VORTEX METER.
2. REFER TO MECHANICAL DRAWINGS FOR PIPE SCHEDULE.
3. BEFORE INSTALLING THE VORTEX METER VERIFY THE ARROW ON THE METER BODY IS FACING THE SAME DIRECTION OF THE FLOW. FLOW MAY BE HORIZONTAL OR VERTICAL, AS LONG AS THE PIPE IS COMPLETELY FULL. FOR LIQUID APPLICATIONS VERTICAL FLOW UP IS PREFERRED, AS THIS GUARANTEES A FULL PIPE AT ALL TIMES.
4. IF PRESSURE AND TEMPERATURE COMPENSATION IS REQUIRED, TAPS MUST BE LOCATED DOWNSTREAM OF THE VORTEX METER.
5. CONTRACTOR IS RESPONSIBLE FOR PROVIDING ALL COMPONENTS TO ASSURE THAT INSTALLATION IS FUNCTIONAL IN ALL RESPECTS.

KEY NOTES

1 NOT USED.

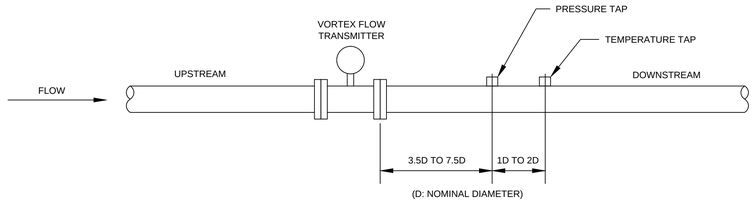

FIGURE 6

PRESSURE AND TEMPERATURE TAPS

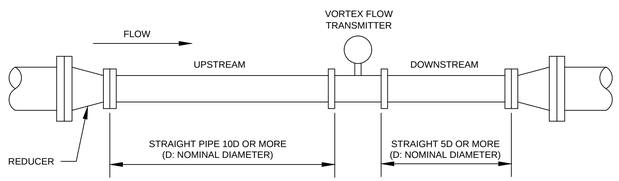

FIGURE 4

ACCEPTABLE REDUCER PIPING CONFIGURATION

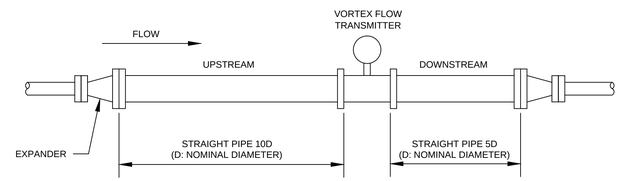

FIGURE 5

ACCEPTABLE EXPANDER PIPING CONFIGURATION

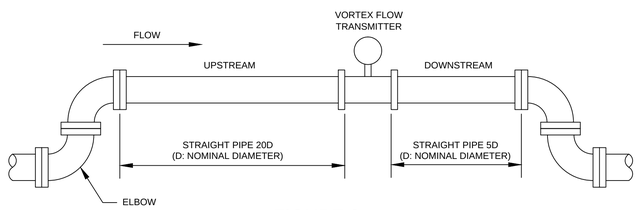

FIGURE 2

ACCEPTABLE ELBOW PIPING CONFIGURATION

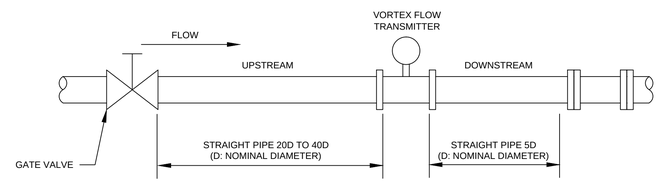

FIGURE 3

ACCEPTABLE VALVE PIPING CONFIGURATION

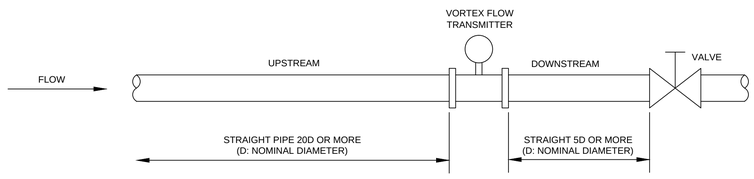

FIGURE 1

IDEAL PIPING CONFIGURATION

1 INSTALLATION DETAILS VORTEX FLOW TRANSMITTER

SCALE: NONE

ZONE	LETTER	DESCRIPTION	DRAWN	DATE	APPRVD

REVISIONS

DRAWN R. CLARK	DATE
DESIGNED N. CAMARATA	DATE
CHECKED A. ERMI	DATE
A&E PM G.HITE	DATE
NASA PM W.LEE	DATE
REQUESTER G.RAISCHE	DATE
R&QA	DATE
SAFETY/PSM	DATE
SUPERVISOR S.FRANKEL	DATE

REGISTERED PROFESSIONAL ENGINEER FREDERICK M. JONES No. E14616 ELECTRICAL STATE OF CALIFORNIA

Ames Research Center
Moffett Field, California

REPLACE ARC JET COMPLEX SVS BOILER
INSTRUMENTATION & CONTROL

INSTALLATION DETAIL VORTEX FLOW TRANSMITTER

SIZE	CAGE CODE		REV
D	25307	A 231-1300-J514	
SCALE NONE		INDEX	SHEET OF

FILE NAME: 231-J514.DWG 12/12/2012

DWG: P:\NASA Ames\1 Replace Arc Jet Boiler\CAD\8C\Sheet\231-J514.dwg Version: 18.2s (LMS Tech) User: davisonv
DATE: Dec 10, 2012 - 4:17:42 pm

DWG NO.	SH.	REV
A231-1300-J515		

SHEET NOTES

1. BEFORE INSTALLING FLOW SWITCH VERIFY THE ARROW ON THE SWITCH BODY IS FACING THE SAME DIRECTION OF THE FLOW.
2. CONTRACTOR IS RESPONSIBLE FOR PROVIDING ALL COMPONENTS TO ASSURE THAT INSTALLATION IS FUNCTIONAL IN ALL RESPECTS.

KEY NOTES

1. THE VANE FLOW SWITCH MUST BE INSTALLED VERTICALLY ON HORIZONTAL PIPE RUNS.
2. THE FLOW SWITCH SHOULD BE LOCATED IN A HORIZONTAL SECTION OF PIPE WHERE THERE IS A STRAIGHT HORIZONTAL RUN OF AT LEAST 5 PIPE DIAMETERS ON EACH SIDE OF THE FLOW SWITCH.
3. THE FLOW SWITCH MUST BE INSTALLED IN THE UPRIGHT POSITION AS SHOWN WITH ARROW MARK ON SAME SIDE OF CASTING IN THE SAME DIRECTION AS FLUID WILL FLOW.

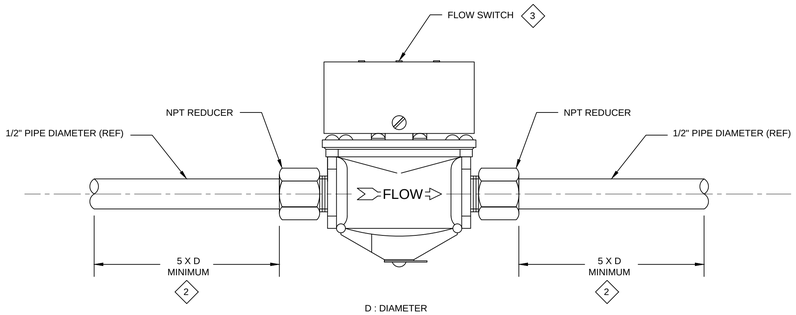

3 INSTALLATION DETAIL IN-LINE FLOW SWITCH
SCALE: NONE

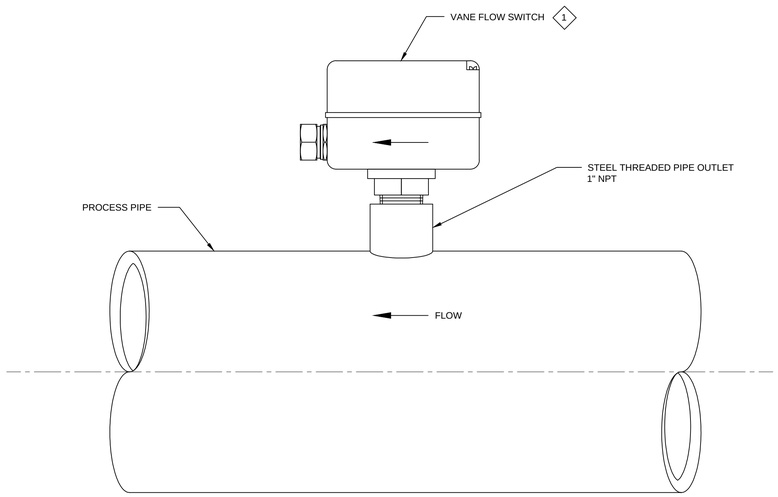

1 INSTALLATION DETAIL VANE FLOW SWITCH
SCALE: NONE

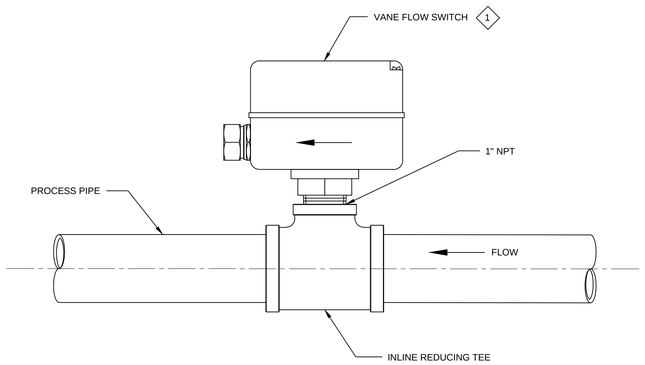

2 INSTALLATION DETAIL VANE FLOW SWITCH
SCALE: NONE

REGISTERED PROFESSIONAL ENGINEER FREDERICK M. JONES No. E14616 ELECTRICAL STATE OF CALIFORNIA

ZONE	LETTER	DESCRIPTION	DRAWN	DATE	APPRVD

REVISIONS

DRAWN R. CLARK	DATE
DESIGNED N. CAMARATA	DATE
CHECKED A. ERMI	DATE
A&E PM G.HITE	DATE
NASA PM W.LEE	DATE
REQUESTER G.RAISCHE	DATE
R&QA	DATE
SAFETY/PSM	DATE
SUPERVISOR S.FRANKEL	DATE

Ames Research Center
Moffett Field, California

REPLACE ARC JET COMPLEX SVS BOILER
INSTRUMENTATION & CONTROL
INSTALLATION DETAIL
FLOW SWITCHES

SIZE	CAGE CODE	A 231-1300-J515	REV
D	25307		
SCALE NONE		INDEX	SHEET OF

FILE NAME: 231-J515.DWG 8/24/2012

DWG: P:\NASA Ames\1 Replace Arc Jet Boiler\CAD\I&C\Sheet\231-J515.dwg Version: 18.2s (LMS Tech) User: davisonv
DATE: Dec 10, 2012 - 4:17:47 pm

DWG NO.	SH.	REV
A231-1300-J516		

SHEET NOTES

1. LOCATE WATER HARDNESS ANALYZER AS CLOSE TO SAMPLING POINT AS POSSIBLE.
2. DO NOT PLACE SAMPLING POINT NEAR A POINT OF CHEMICAL ADDITION.
3. CONTRACTOR IS RESPONSIBLE FOR PROVIDING ALL COMPONENTS TO ASSURE THAT INSTALLATION IS FUNCTIONAL IN ALL RESPECTS.

KEY NOTES

1. A VENT ASSEMBLY IS REQUIRED TO AVOID EXCESS VACUUM AT THE SAMPLE CONDITIONING BLOCK. THE VENT SHOULD BE LOCATED ABOVE THE SAMPLE CONDITIONING BLOCK.
2. ROUTE HOSES TO DRAIN WHICH IS AT LEAST ONE FOOT LOWER IN ELEVATION THAN THE BOTTOM OF THE WATER HARDNESS ANALYZER.

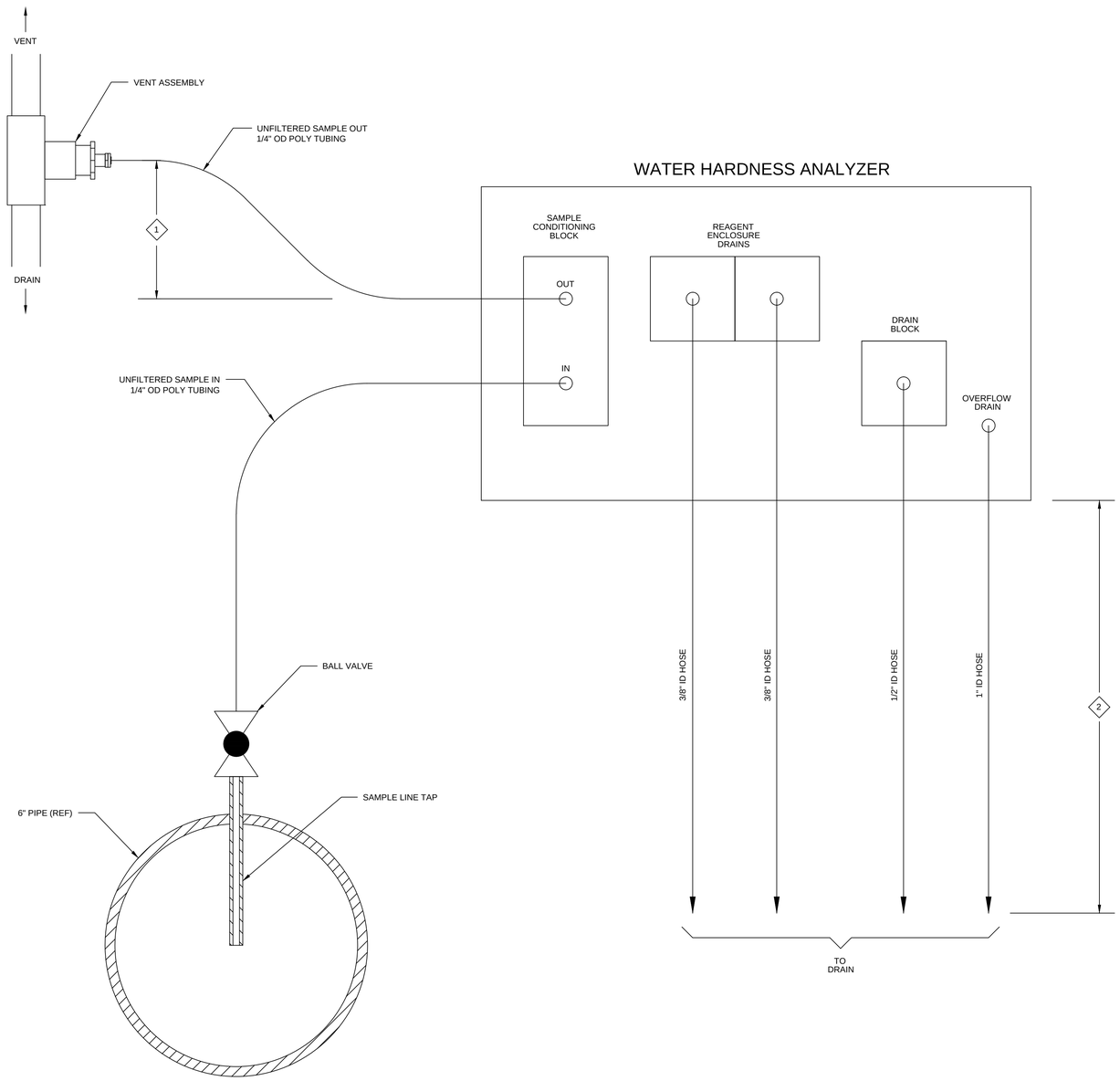

1 INSTALLATION DETAIL WATER HARDNESS ANALYZER
SCALE: NONE

REGISTERED PROFESSIONAL ENGINEER FREDERICK M. JONES No. E14616 ELECTRICAL STATE OF CALIFORNIA

ZONE	LETTER	DESCRIPTION	DRAWN	DATE	APPRVD

REVISIONS

DRAWN R. CLARK	DATE
DESIGNED N. CAMARATA	DATE
CHECKED A. ERMI	DATE
A&E PM G.HITE	DATE
NASA PM W.LEE	DATE
REQUESTER G.RAISCHE	DATE
R&QA	DATE
SAFETY/PSM	DATE
SUPERVISOR S.FRANKEL	DATE

Ames Research Center
Moffett Field, California

REPLACE ARC JET COMPLEX SVS BOILER
INSTRUMENTATION & CONTROL
INSTALLATION DETAIL
WATER HARDNESS ANALYZER

SIZE	CAGE CODE		REV
D	25307	A 231-1300-J516	
SCALE NONE		INDEX	SHEET OF

FILE NAME: 231-J516.DWG 8/24/2012

DWG: P:\NASA Ames\1 Replace Arc Jet Boiler\CAD\I&C\Sheet\231-J516.dwg Version: 18.2s (LMS Tech) User: davisonv
DATE: Dec 10, 2012 - 4:17:52 pm

DWG NO.	SH.	REV
A231-1300-J601		

SHEET NOTES

1. SEE DRAWING J001 FOR GENERAL NOTES AND ABBREVIATIONS.
2. CABLES FROM FIELD DEVICES TO CABINET TERMINAL STRIPS TO BE FIELD WIRED, AND ARE NOT INCLUDED.
3. CABLES WITHIN CABINETS ARE NOT INCLUDED.
4. CAT5e CABLES FROM MEDIA CONVERTERS TO ETHERNET SWITCHES OR COMPUTERS ARE NOT INCLUDED.
5. CABLES THAT ARE PART OF EXISTING SYSTEMS OR SHOWN ON DRAWING A231-1300-J602, "CONTROL SYSTEM BLOCK DIAGRAM", AS PART OF ANY FUTURE PROJECT ARE NOT INCLUDED.

KEY NOTES

1. REFER TO DRAWING A231-1300-J602, "CONTROL SYSTEM BLOCK DIAGRAM".
2. CABLE TO BE FIELD ROUTED AND INSTALLED AT SITE. ACTUAL LENGTH MAY VARY.

CABLE TYPE	
DESCRIPTION	SPECIFICATION
ETHERNET CAT5e, 4 TWISTED PAIR, 24 AWG, CMP	27 10 00
FIBER OPTIC CABLE, 6 STRAND, 62.5 MICRON MULTIMODE INDOOR / OUTDOOR, RISER, ARMORED, GEL FREE	27 10 00

TABLE 2

CABLE TYPES

CABLE I.D. PER BLOCK DIAGRAM (1)	CABLE NUMBER	CABLE INFORMATION				ROUTING INFORMATION						APPROXIMATE LENGTH (FEET) (2)
						FROM			TO			
		TYPE	DESCRIPTION	SIZE (AWG)	MANUFACTURER	LOCATION	CABINET	TERMINATION	LOCATION	CABINET	TERMINATION	
C-1	001/ESW1-201/ESW2	ETHERNET	CAT 5e	#24	BELDEN	N231 CONTROL ROOM	CAB-001	E-SW1	N231 BOILER PLANT	CAB-201	E-SW2	175
C-2	001/ESW1-N231/BMS	ETHERNET	CAT 5e	#24	BELDEN	N231 CONTROL ROOM	CAB-001	E-SW1	N231 CONTROL ROOM	(n/a)	BMS CLIENT	40
C-3	001/ESW1-N231/CCS	ETHERNET	CAT 5e	#24	BELDEN	N231 CONTROL ROOM	CAB-001	E-SW1	N231 CONTROL ROOM	(n/a)	CCS CLIENT	40
C-4	001/ESW1-N231/BOP	ETHERNET	CAT 5e	#24	BELDEN	N231 CONTROL ROOM	CAB-001	E-SW1	N231 CONTROL ROOM	(n/a)	SVS/BOP CLIENT	40
C-5	001/ESW1-AFDCS	ETHERNET	CAT 5e	#24	BELDEN	N231 CONTROL ROOM	CAB-001	E-SW1	N231 CONTROL ROOM	(n/a)	AFDCS CLIENT	50
C-6	001/ESW1-N231/PRINTER	ETHERNET	CAT 5e	#24	BELDEN	N231 CONTROL ROOM	CAB-001	E-SW1	N231 CONTROL ROOM	(n/a)	COLOR PRINTER	50
C-7	201/ESW2-202/ESW3	ETHERNET	CAT 5e	#24	BELDEN	N231 BOILER PLANT	CAB-201	E-SW2	N231 BOILER PLANT	CAB-202	E-SW3	100
C-8	202/ESW3-213/ESW4	ETHERNET	CAT 5e	#24	BELDEN	N231 BOILER PLANT	CAB-202	E-SW3	N231 BOILER PLANT	CAB-211	E-SW4	100
C-9	202/ESW3-213/ESW5	ETHERNET	CAT 5e	#24	BELDEN	N231 BOILER PLANT	CAB-202	E-SW3	N231 BOILER PLANT	CAB-211	E-SW5	100
C-10	202/ESW3-211/ESW6	ETHERNET	CAT 5e	#24	BELDEN	N231 BOILER PLANT	CAB-202	E-SW3	N231 BOILER PLANT	CAB-212	E-SW6	100
C-11	202/ESW3-211/ESW7	ETHERNET	CAT 5e	#24	BELDEN	N231 BOILER PLANT	CAB-202	E-SW3	N231 BOILER PLANT	CAB-212	E-SW7	100
C-12	201/ESW2-212/ESW8	ETHERNET	CAT 5e	#24	BELDEN	N231 BOILER PLANT	CAB-202	E-SW3	N231 BOILER PLANT	CAB-213	E-SW8	100
C-13	201/ESW2-212/ESW9	ETHERNET	CAT 5e	#24	BELDEN	N231 BOILER PLANT	CAB-202	E-SW3	N231 BOILER PLANT	CAB-213	E-SW9	100
C-14	001/MC1-101/MC2	FIBER	6 STRAND	62 µm	CORNING	N231 CONTROL ROOM	CAB-001	MC-1	SVS COURTYARD	CAB-101	MC-2	300
C-15	101/MC3-N238/MC4	FIBER	6 STRAND	62 µm	CORNING	SVS COURTYARD	CAB-101	MC-3	BLDG. 238	(n/a)	MC-4	400
C-16	101/ESW10-N234/SVS	ETHERNET	CAT 5e	#24	BELDEN	SVS COURTYARD	CAB-101	E-SW10	BLDG. 234	(n/a)	SVS CLIENT	200
C-17	001/MC5-N234A/MC6	FIBER	6 STRAND	62 µm	CORNING	N231 CONTROL ROOM	CAB-001	MC-5	N234A CONTROL ROOM	(n/a)	MC-6	250
C-18	201/MC7-RO/MC8	FIBER	6 STRAND	62 µm	CORNING	N231 BOILER PLANT	CAB-201	MC-7	NEAR HUNSAKER ROAD	CAB-RO	MC-8	300
C-19	001/ESW16-201/ESW15	ETHERNET	CAT 5e	#24	BELDEN	N231 CONTROL ROOM	CAB-001	E-SW16	N231 BOILER PLANT	CAB-201	E-SW15	175
C-20	001/MC9-N234/MC10	FIBER	6 STRAND	62 µm	CORNING	N231 CONTROL ROOM	CAB-001	MC-9	N234A CONTROL ROOM	(n/a)	MC-10	300

TABLE 1

CABLE DETAILS

1 INSTRUMENT CABLE SCHEDULE

SCALE: NONE

REGISTERED PROFESSIONAL ENGINEER FREDERICK M. JONES No. E14616 ELECTRICAL STATE OF CALIFORNIA

ZONE	LETTER	DESCRIPTION	DRAWN	DATE	APPRVD

REVISIONS

DRAWN R. CLARK	DATE
DESIGNED A. ERMI	DATE
CHECKED N. CAMARATA	DATE
A&E PM G.HITE	DATE
NASA PM W.LEE	DATE
REQUESTER G.RAISCHE	DATE
R&QA	DATE
SAFETY/PSM	DATE
SUPERVISOR S.FRANKEL	DATE

Ames Research Center
Moffett Field, California

REPLACE ARC JET COMPLEX SVS BOILER
INSTRUMENTATION & CONTROL

INSTRUMENT CABLE SCHEDULE

SIZE	CAGE CODE		REV
D	25307	231-1300-J601	
SCALE NONE		INDEX	SHEET OF

FILE NAME: 231-J601.DWG 12/12/2012

DWG: P:\NASA Ames\1 Replace Arc Jet Boiler\CAD\I&C\Sheet\231-J601.dwg Version: 18.2s (LMS Tech) User: davisonv
DATE: Dec 10, 2012 - 4:17:57 pm

DWG NO.	SH.	REV
A231-1300-J602		

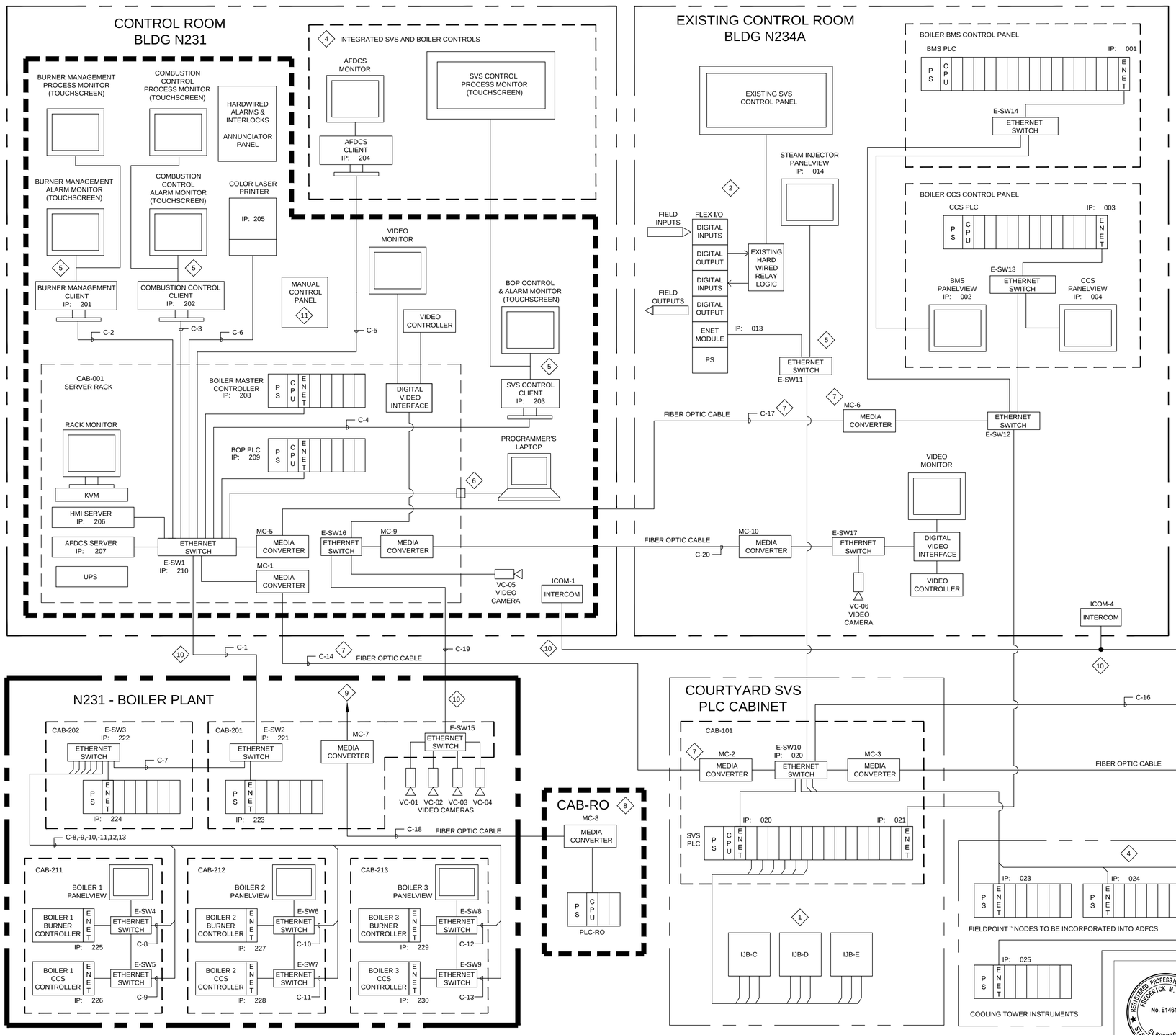

SHEET NOTES

1. SEE DRAWING J001 FOR GENERAL NOTES, ABBREVIATIONS AND TRADEMARKS.
2. EQUIPMENT ENCLOSED IN HEAVY LINES IS THE SCOPE OF THE SVS BOILER REPLACEMENT PROJECT.
3. IP ADDRESSES DISPLAY THE CLASS C HOST ID.
4. CABLES NUMBERS SHOWN AS "C-X". DETAILS ON DRAWING A234B-1102-J601, INSTRUMENT CABLE SCHEDULE.
5. ADDITIONAL INFORMATION ON INTERCOM ON DRAWING J101, DRAWING E103 AND IN SPECIFICATION SECTION 27 21 00.00 40 INTERCOMMUNICATIONS SYSTEM.

KEY NOTES

1. EXISTING JUNCTION BOXES IN THE FIELD.
2. NOT IN CONTRACT. STEAM INJECTOR PANELVIEW AND FLEX I/O BY SVS UPGRADE PROJECT. EXISTING RELAY LOGIC WILL BE MAPPED THROUGH THE FLEX-IO DROP. THE RELAY LOGIC WILL BE REPLICATED IN THE PLC, AND THE RELAYS WILL BE REMOVED.
3. NOT IN CONTRACT. REMOTE CLIENTS PROVIDE NO CONTROL EXCEPT A "READY" SIGNAL TO THE CONTROL ROOM.
4. NOT IN CONTRACT. SVS CONTROLS AND ADFCS.
5. CONNECT THE CLIENT COMPUTER AND ONE TOUCHSCREEN (SUCH AS ALLEN-BRADLEY'S VERSAVIEW) TO E-SW11 IN THE N234A CONTROL ROOM UNTIL THE SVS CONTROLS ARE MIGRATED TO THE N231 CONTROL ROOM. PROVIDE ADDITIONAL ETHERNET PORTS AS REQUIRED.
6. DATA INTERFACE PORT (GRACEPORT OR EQUIVALENT).
7. CABLES C-14, C-17 AND MEDIA CONVERTERS MC-2 AND MC-6 IN CONTRACT.
8. PLC-RO CONTROLS 3-WAY RO VALVE. CAB-RO IS LOCATED NORTH OF BOILER PLANT NEAR HUNSAKER ROAD.
9. CONNECTS TO NASA-AMES INTRANET IN BLDG. N231 (BY OTHERS).
10. INSTALL SURGE SUPPRESSORS (SUCH AS EDCO FAS-1-060HC SERIES) FOR SIGNAL, NETWORKING AND INTERCOM WIRING EXITING A BUILDING.
11. CONTAINS SWITCHES FOR KIRK KEYS AND NH3 EMERGENCY BUTTONS. ADDITIONAL NH3 EMERGENCY BUTTONS, BEACONS AND HORN LOCATED IN THE BOILER PLANT AND HIGH-BAY. SEE DRAWINGS A231-1300-J102 AND J715.

ZONE	LETTER	DESCRIPTION	DRAWN	DATE	APPRVD

REVISIONS

DRAWN R. CLARK	DATE	
DESIGNED N. CAMARATA	DATE	
CHECKED A. ERMI	DATE	
A&E PM G.HITE	DATE	
NASA PM W.LEE	DATE	
REQUESTER G.RAISCHE	DATE	
R&QA	DATE	
SAFETY/PSM	DATE	
SUPERVISOR S.FRANKEL	DATE	

Ames Research Center
Moffett Field, California

REPLACE ARC JET COMPLEX SVS BOILER
INSTRUMENTATION & CONTROL

CONTROL SYSTEM BLOCK DIAGRAM

SIZE	CAGE CODE	REV
D	25307	A
SCALE NONE	INDEX	SHEET OF

231-1300-J602

FILE NAME: 231-J602.DWG 12/12/2012

REGISTERED PROFESSIONAL ENGINEER FREDERICK M. JONES No. E14616 ELECTRICAL STATE OF CALIFORNIA

DWG: P:\NASA Ames\1 Replace Arc Jet Boiler\CAD\&CS\Sheet\231-J602.dwg Version: 18.2s (LMS Tech) User: davisonv
DATE: Dec 10, 2012 - 4:18:03 pm

DWG NO.	SH.	REV
A231-1300-J701		

SHEET NOTES

1. SEE DRAWING J001 FOR GENERAL NOTES, ABBREVIATIONS AND SYMBOLS.

KEY NOTES

1. TYPICAL SINGLE TANK INDUSTRIAL WATER SOFTENER SYSTEM SHOWN: TO BE PROVIDED BY WATER SOFTENER VENDOR. TAG NAME NUMBER RANGE 4030-4069 RESERVED FOR VENDOR.
2. MONITORED AND CONTROLLED BY R.O. PROJECT.

INTERLOCKS

I 1 — HOT WELL PUMP P-3 OFF (DRAWING A234A-0900-J0001, SHEET 3, STEAM VACUUM SYSTEM P&ID.) PREVENTS PUMP HXP-1 FROM RUNNING.

I 10 — FLOW DETECTED BY FLOW SWITCH FS-4123 STARTS HEAT EXCHANGER PUMPS HXP-1, HXP-2 (DRAWING J704) AND HXP-3 (DRAWING J704).

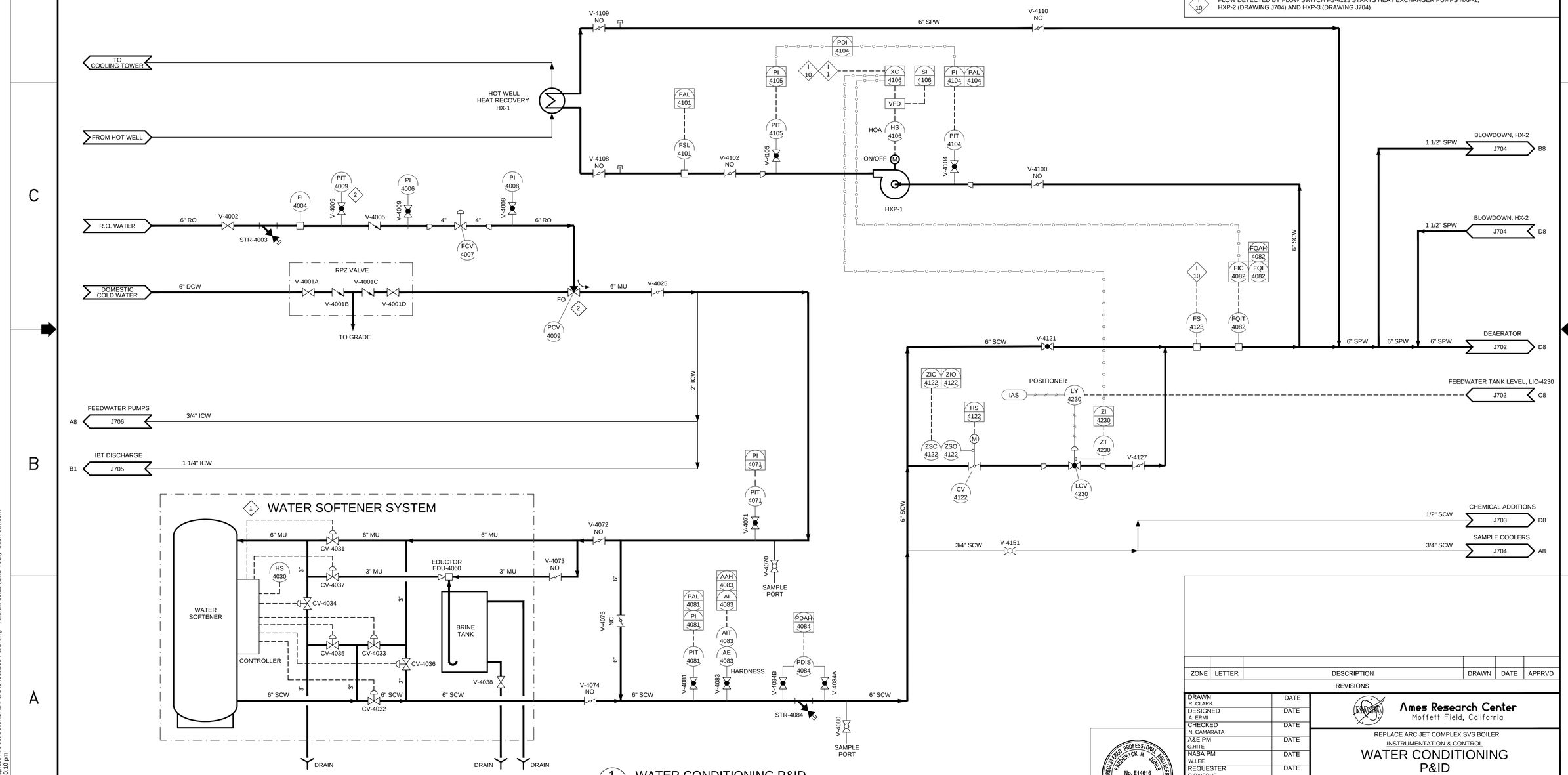

1 WATER CONDITIONING P&ID
J701
SCALE: NONE

ZONE	LETTER	DESCRIPTION	DRAWN	DATE	APPRVD

REVISIONS

DRAWN R. CLARK	DATE
DESIGNED A. ERMI	DATE
CHECKED N. CAMARATA	DATE
A&E PM G.HITE	DATE
NASA PM W.LEE	DATE
REQUESTER G.RAISCHE	DATE
R&QA	DATE
SAFETY/PSM	DATE
SUPERVISOR S.FRANKEL	DATE

REGISTERED PROFESSIONAL ENGINEER — FREDERICK M. JONES — No. E14616 — ELECTRICAL — STATE OF CALIFORNIA

Ames Research Center
Moffett Field, California

REPLACE ARC JET COMPLEX SVS BOILER
INSTRUMENTATION & CONTROL

WATER CONDITIONING P&ID

SIZE	CAGE CODE		REV
D	25307	231-1300-J701	
SCALE NONE		INDEX	SHEET OF

FILE NAME: 231-P&ID.DWG 12/12/2012

DWG: P:\NASA Ames\1 Replace Arc Jet Boiler\CAD\P&ID\Sheet\231-P&ID.dwg Version: 18.2s (LMS Tech) User: davisonv
DATE: Dec 10, 2012 - 4:20:10 pm

DWG NO.	SH.	REV
A231-1300-J702		

SHEET NOTES

1. SEE DRAWING J001 FOR GENERAL NOTES, ABBREVIATIONS AND SYMBOLS.

KEY NOTES

1. AUXILLIARY BOILER SKID. PROVIDED BY VENDOR.

INTERLOCKS

I 2 — LOW-LOW FEEDWATER TANK LEVEL LALL-4230 TRIPS BOILER OFF, AND STOPS FEEDWATER PUMPS BFP-1, BFP-2 AND BFP-3 (DRAWING J706) AFTER A SET TIME DELAY.

I 3 — LOW-LOW FEEDWATER TANK LEVEL LSLL-4234 TRIPS BOILER OFF, AND STOPS FEEDWATER PUMPS BFP-1, BFP-2 AND BFP-3 (DRAWING J706) AFTER A SET TIME DELAY.

I 12 — OPERATION OF ANY BOILER (SB-1, SB-2 OR SB-3) OPENS DEAERATOR VENT ASSEMBLY VALVE SOV-4208.

I 13 — PUMP DISCHARGE SOLENOID VALVE SOV-5625 OPENS WHEN PUMP BFP-4 STARTS.

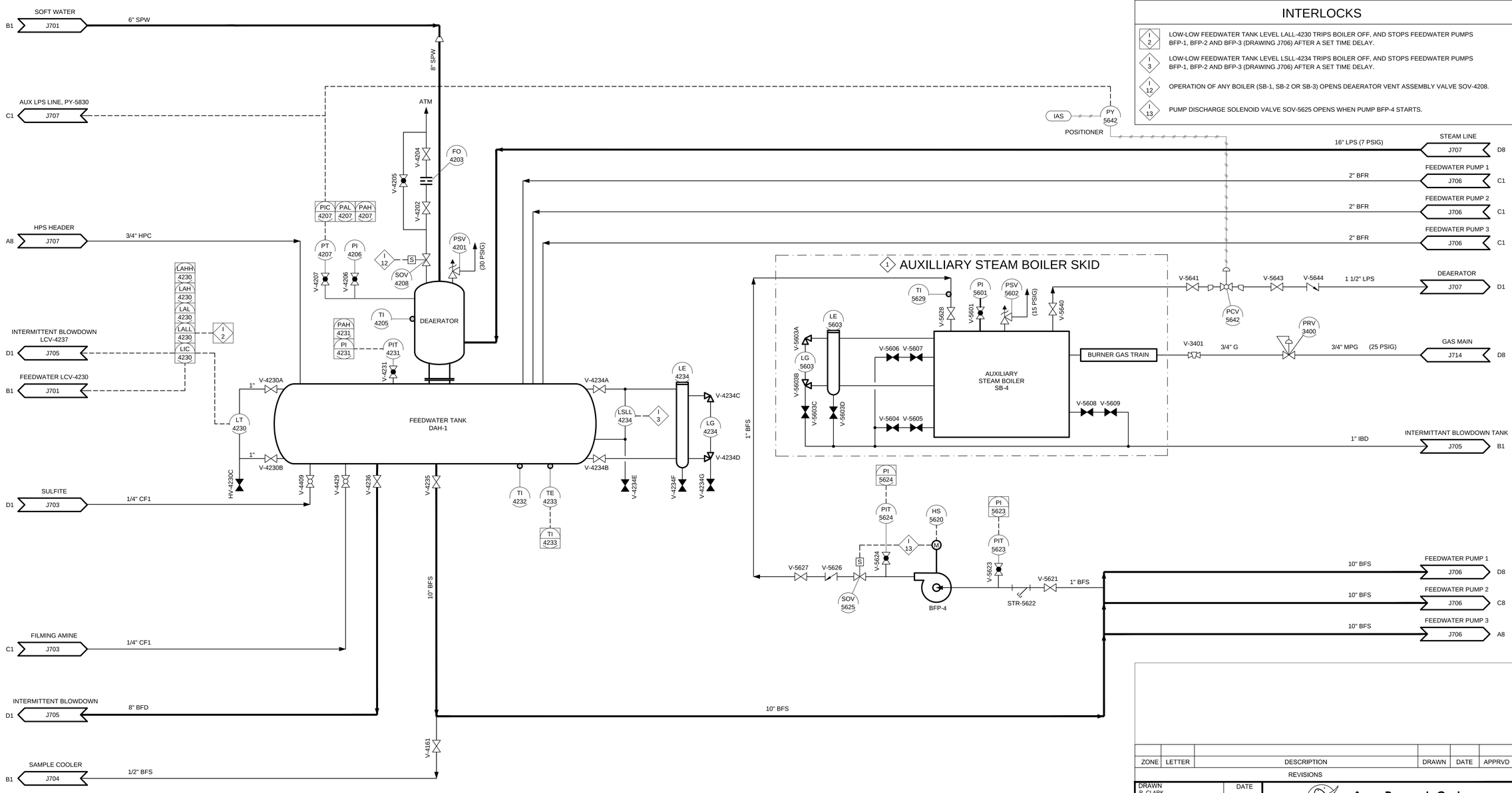

1 J702 DEAERATOR AND FEEDWATER TANK P&ID
SCALE: NONE

ZONE	LETTER	DESCRIPTION	DRAWN	DATE	APPRVD

REVISIONS

DRAWN R. CLARK	DATE
DESIGNED A. ERMI	DATE
CHECKED N. CAMARATA	DATE
A&E PM G.HITE	DATE
NASA PM W.LEE	DATE
REQUESTER G.RAISCHE	DATE
R&QA	DATE
SAFETY/PSM	DATE
SUPERVISOR S.FRANKEL	DATE

REGISTERED PROFESSIONAL ENGINEER FREDERICK M. JONES No. E14616 ELECTRICAL STATE OF CALIFORNIA

Ames Research Center
Moffett Field, California

REPLACE ARC JET COMPLEX SVS BOILER
INSTRUMENTATION & CONTROL

DEAERATOR AND FEEDWATER TANK P&ID

SIZE	CAGE CODE	REV
D	25307	A
SCALE NONE	INDEX	SHEET OF

231-1300-J702

FILE NAME: 231-P&ID.DWG 12/12/2012

DWG: P:\NASA Ames\1 Replace Arc Jet Boiler\CAD\P&ID\Sheet\231-P&ID.dwg Version: 18.2s (LMS Tech) User: davisonv
DATE: Dec 10, 2012 - 4:20:12 pm

DWG NO.	SH.	REV
A231-1300-J703		

SHEET NOTES

1. SEE DRAWING J001 FOR GENERAL NOTES, ABBREVIATIONS AND SYMBOLS.

KEY NOTES

1 NOT USED.

INTERLOCKS

I 5 — RUNNING ANY FEEDWATER PUMP (DRAWING J706) STARTS CHEMICAL FFED PUMPS OR CHEMICAL FEED INJECTION CYCLES.

I 6 — BOILER 1 FEEDWATER VALVE LCV-5005 OPEN (DRAWING J708) AND COMMAND TO OPERATE BOILER 1 BY MASTER CONTROLLER OPENS THE CHEMICAL FEED SOLENOID VALVES SOV-4480 AND SOV-4484 TO BOILER 1 STEAM DRUM.

I 7 — BOILER 2 FEEDWATER VALVE LCV-5205 OPEN (DRAWING J710) AND COMMAND TO OPERATE BOILER 2 BY MASTER CONTROLLER OPENS THE CHEMICAL FEED SOLENOID VALVES SOV-4482 AND SOV-4486 (IF BOILER 1 ALSO SELECTED) OR VALVES SOV-4481 AND SOV-4485 (IF BOILER 3 ALSO SELECTED) TO BOILER 2 STEAM DRUM.

I 8 — BOILER 3 FEEDWATER VALVE LCV-5405 OPEN (DRAWING J712) AND COMMAND TO OPERATE BOILER 3 BY MASTER CONTROLLER OPENS THE CHEMICAL FEED SOLENOID VALVES SOV-4483 AND SOV-4487 TO BOILER 3 STEAM DRUM.

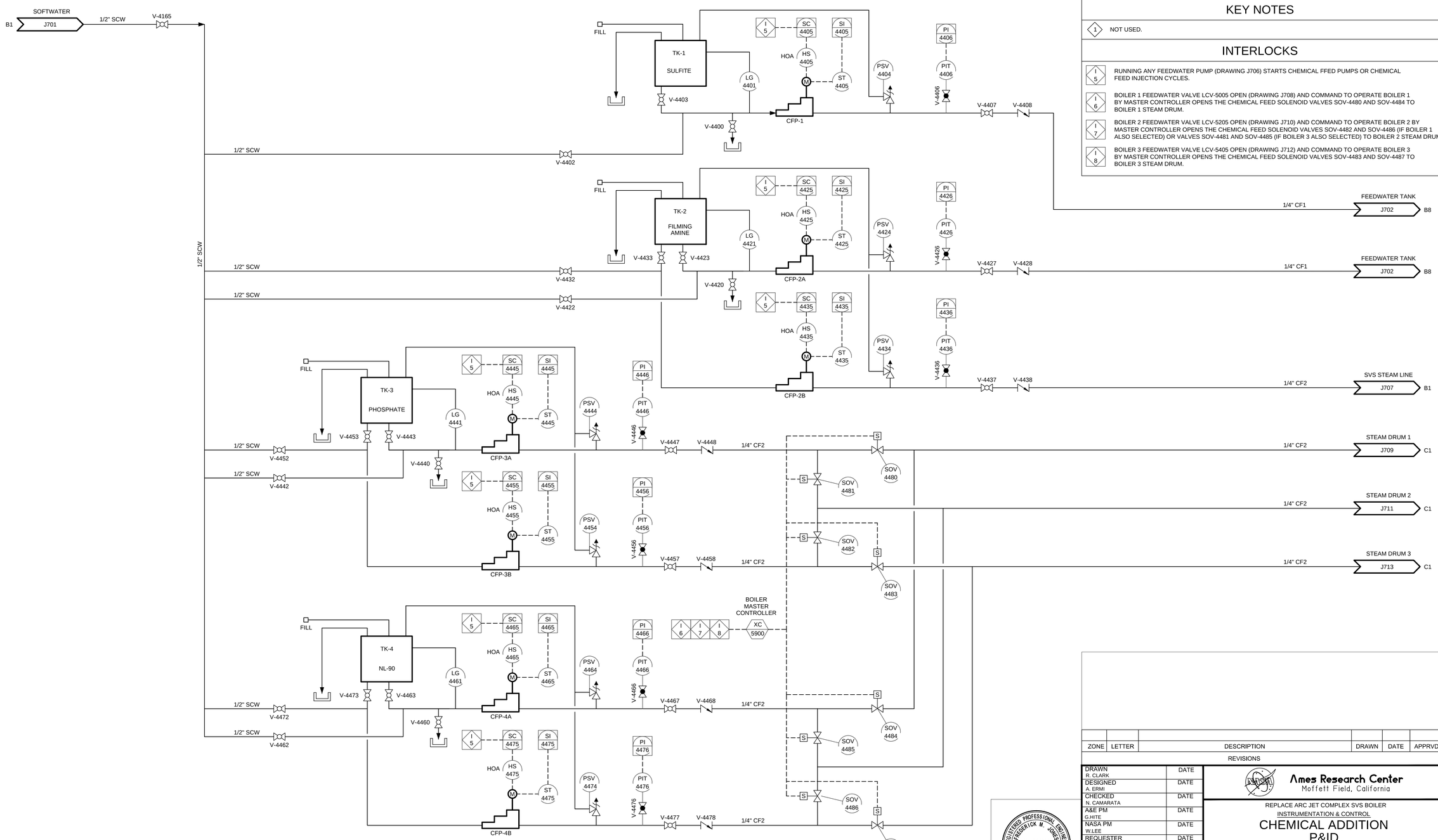

1 CHEMICAL ADDITION P&ID
J703 SCALE: NONE

ZONE	LETTER	DESCRIPTION	DRAWN	DATE	APPRVD

REVISIONS

DRAWN R. CLARK	DATE	
DESIGNED A. ERMI	DATE	
CHECKED N. CAMARATA	DATE	
A&E PM G.HITE	DATE	
NASA PM W.LEE	DATE	
REQUESTER G.RAISCHE	DATE	
R&QA	DATE	
SAFETY/PSM	DATE	
SUPERVISOR S.FRANKEL	DATE	

REGISTERED PROFESSIONAL ENGINEER REGERICK M. JONES No. E14616 ELECTRICAL STATE OF CALIFORNIA

Ames Research Center
Moffett Field, California

REPLACE ARC JET COMPLEX SVS BOILER
INSTRUMENTATION & CONTROL
CHEMICAL ADDITION
P&ID

SIZE	CAGE CODE	REV
D	25307	A 231-1300-J703
SCALE NONE	INDEX	SHEET OF

FILE NAME: 231-P&ID.DWG 12/12/2012

DWG: P:\NASA Ames1 Replace Arc Jet Boiler\CAD\P&ID\Sheet\231-P&ID.dwg Version: 18.2s (LMS Tech) User: davisonv
DATE: Dec 10, 2012 - 4:20:17 pm

DWG NO.	SH.	REV
A231-1300-J704		

SHEET NOTES

1. SEE DRAWING J001 FOR GENERAL NOTES, ABBREVIATIONS AND SYMBOLS.

KEY NOTES

(1) AUTOMATIC MODULATING CONTROL VALVES BY BOILER MANUFACTURER.

INTERLOCKS

(I 4) VALVES CV-5700 (DRAWING J709), CV-5703 (DRAWING J711) AND CV5706 (DRAWING J713) ALL CLOSED PREVENTS PUMPS HXP-2 AND HXP-3 FROM RUNNING.

(I 10) FLOW DETECTED BY FLOW SWITCH FS-4123 (DRAWING J701) STARTS HEAT EXCHANGER PUMPS HXP-2 AND HXP-3.

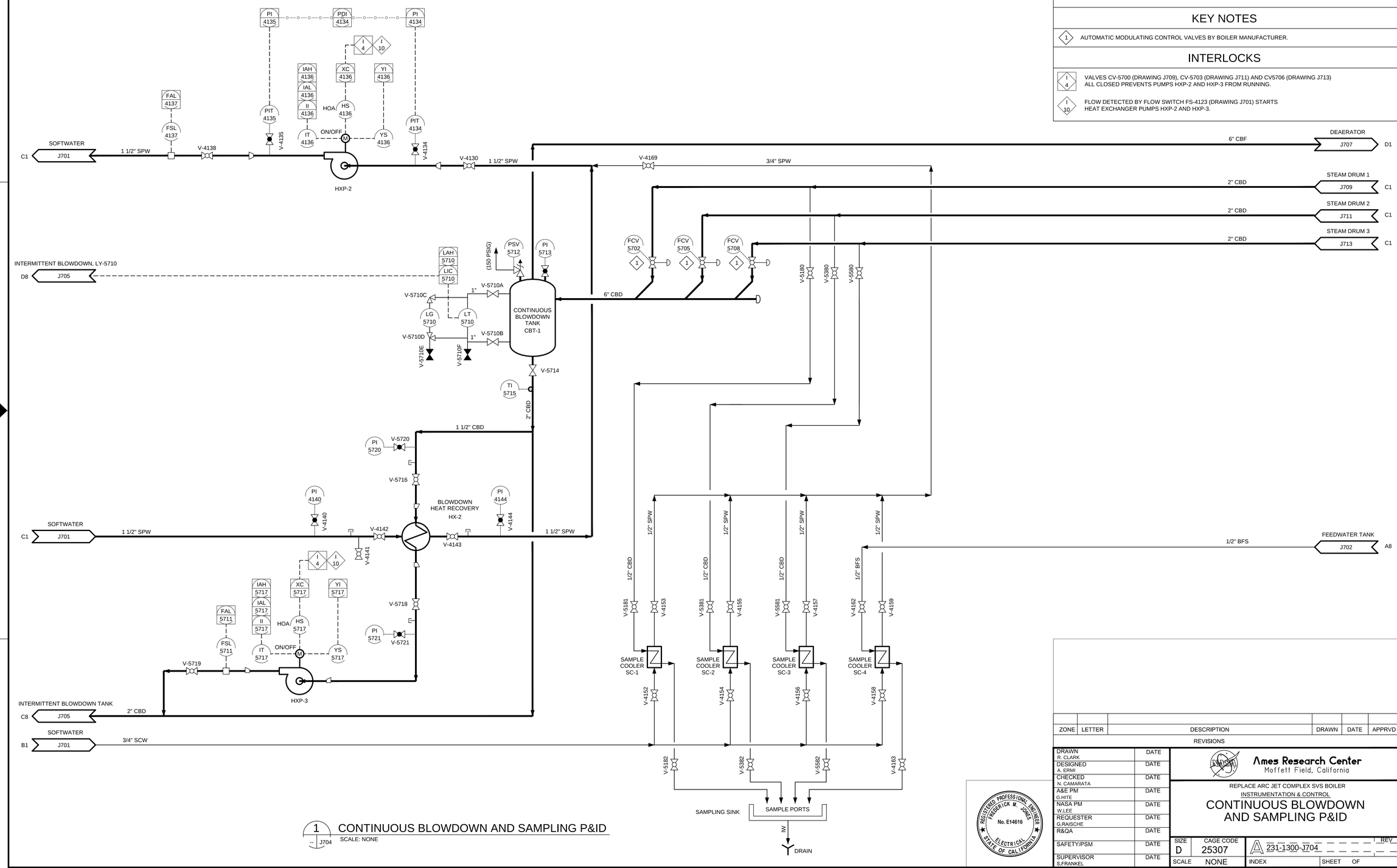

1 CONTINUOUS BLOWDOWN AND SAMPLING P&ID
J704
SCALE: NONE

ZONE	LETTER	DESCRIPTION	DRAWN	DATE	APPRVD

REVISIONS

DRAWN R. CLARK	DATE
DESIGNED A. ERMI	DATE
CHECKED N. CAMARATA	DATE
A&E PM G.HITE	DATE
NASA PM W.LEE	DATE
REQUESTER G.RAISCHE	DATE
R&QA	DATE
SAFETY/PSM	DATE
SUPERVISOR S.FRANKEL	DATE

REGISTERED PROFESSIONAL ENGINEER FREDERICK M. JONES No. E14616 ELECTRICAL STATE OF CALIFORNIA

Ames Research Center
Moffett Field, California

REPLACE ARC JET COMPLEX SVS BOILER
INSTRUMENTATION & CONTROL

CONTINUOUS BLOWDOWN AND SAMPLING P&ID

SIZE	CAGE CODE		REV
D	25307	231-1300-J704	
SCALE NONE		INDEX	SHEET OF

FILE NAME: 231-P&ID.DWG 12/12/2012

DWG: P:\NASA Ames\1 Replace Arc Jet Boiler\CAD\P&ID\Sheet\231-P&ID.dwg Version: 18.2s (LMS Tech) User: davisonv
DATE: Dec 10, 2012 - 4:20:22 pm

DWG NO.	SH.	REV
A231-1300-J705		

SHEET NOTES

1. SEE DRAWING J001 FOR GENERAL NOTES, ABBREVIATIONS AND SYMBOLS.

KEY NOTES

1. NOT USED.

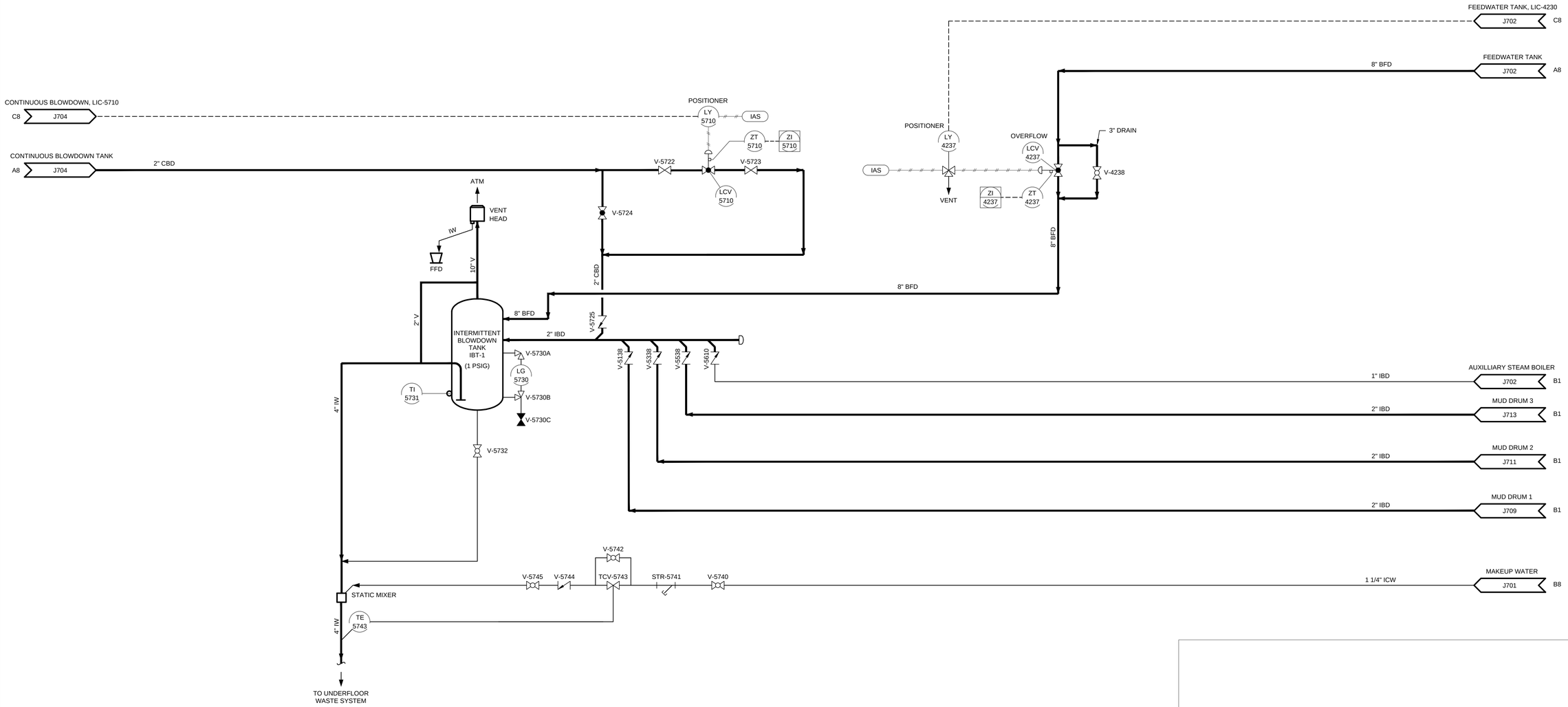

1 J705 INTERMITTENT BLOWDOWN P&ID
SCALE: NONE

ZONE	LETTER	DESCRIPTION	DRAWN	DATE	APPRVD

REVISIONS

DRAWN R. CLARK	DATE	
DESIGNED A. ERMI	DATE	
CHECKED N. CAMARATA	DATE	
A&E PM G.HITE	DATE	
NASA PM W.LEE	DATE	
REQUESTER G.RAISCHE	DATE	
R&QA	DATE	
SAFETY/PSM	DATE	
SUPERVISOR S.FRANKEL	DATE	

REGISTERED PROFESSIONAL ENGINEER FREDERICK M. JONES No. E14616 ELECTRICAL STATE OF CALIFORNIA

Ames Research Center
Moffett Field, California

REPLACE ARC JET COMPLEX SVS BOILER
INSTRUMENTATION & CONTROL
INTERMITTENT BLOWDOWN P&ID

SIZE	CAGE CODE	REV
D	25307	231-1300-J705
SCALE NONE	INDEX	SHEET OF

FILE NAME: 231-P&ID.DWG 12/12/2012

DWG: P:\nasa ames\1 replace arc jet boiler\CAD\P&ID\Sheet\231-P&ID.dwg Version: 18.2s (LMS Tech) User: davisonv
DATE: Dec 11, 2012 - 8:51:02 am

DWG NO.	SH.	REV
A231-1300-J706		

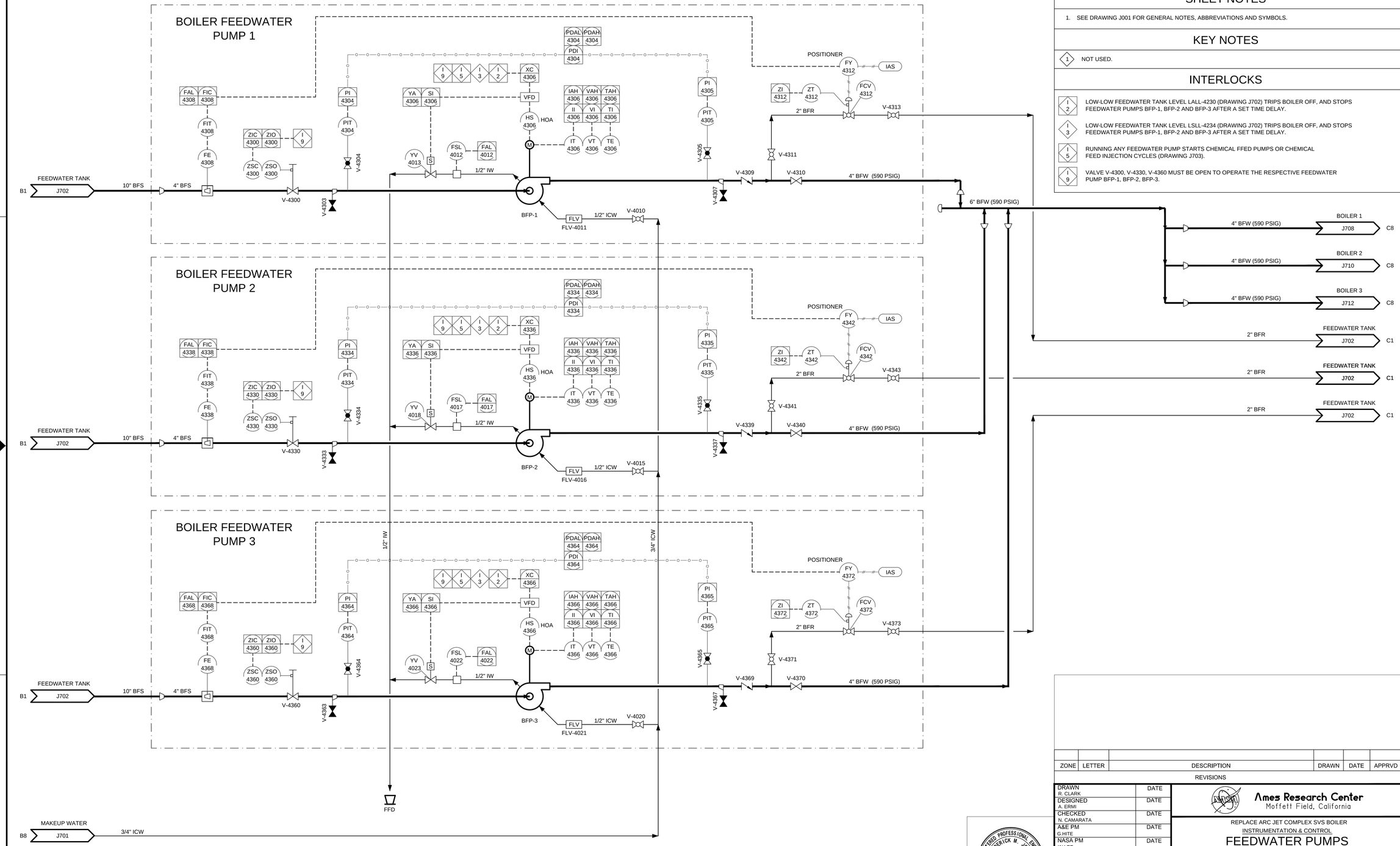

1 J706 FEEDWATER PUMPS P&ID
SCALE: NONE

SHEET NOTES

1. SEE DRAWING J001 FOR GENERAL NOTES, ABBREVIATIONS AND SYMBOLS.

KEY NOTES

1 NOT USED.

INTERLOCKS

I 2 — LOW-LOW FEEDWATER TANK LEVEL LALL-4230 (DRAWING J702) TRIPS BOILER OFF, AND STOPS FEEDWATER PUMPS BFP-1, BFP-2 AND BFP-3 AFTER A SET TIME DELAY.

I 3 — LOW-LOW FEEDWATER TANK LEVEL LSLL-4234 (DRAWING J702) TRIPS BOILER OFF, AND STOPS FEEDWATER PUMPS BFP-1, BFP-2 AND BFP-3 AFTER A SET TIME DELAY.

I 5 — RUNNING ANY FEEDWATER PUMP STARTS CHEMICAL FFED PUMPS OR CHEMICAL FEED INJECTION CYCLES (DRAWING J703).

I 9 — VALVE V-4300, V-4330, V-4360 MUST BE OPEN TO OPERATE THE RESPECTIVE FEEDWATER PUMP BFP-1, BFP-2, BFP-3.

ZONE	LETTER	DESCRIPTION	DRAWN	DATE	APPRVD

REVISIONS

DRAWN R. CLARK	DATE	Ames Research Center, Moffett Field, California
DESIGNED A. ERMI	DATE	
CHECKED N. CAMARATA	DATE	REPLACE ARC JET COMPLEX SVS BOILER
A&E PM G.HITE	DATE	INSTRUMENTATION & CONTROL
NASA PM W.LEE	DATE	FEEDWATER PUMPS P&ID
REQUESTER G.RAISCHE	DATE	
R&QA	DATE	
SAFETY/PSM	DATE	SIZE D · CAGE CODE 25307 · A 231-1300-J706 · REV
SUPERVISOR S.FRANKEL	DATE	SCALE NONE · INDEX · SHEET · OF

REGISTERED PROFESSIONAL ENGINEER FREDERICK M. JONES No. E14616 ELECTRICAL STATE OF CALIFORNIA

FILE NAME: 231-P&ID.DWG 12/12/2012

DWG: P:\NASA Ames\1 Replace Arc Jet Boiler\CAD\P&ID\Sheet\231-P&ID.dwg Version: 18.2s (LMS Tech) User: davisonv
DATE: Dec 10, 2012 - 4:20:53 pm

DWG NO.	SH.	REV
A231-1300-J707		

SHEET NOTES

1. SEE DRAWING J001 FOR GENERAL NOTES, ABBREVIATIONS AND SYMBOLS.

KEY NOTES

1 NOT USED.

INTERLOCKS

I 11 REMOVING EITHER THE NORTH OR SOUTH PLENUM SVS SYSTEM KIRK INTERLOCK KEYS FROM THEIR KEY SLOTS OPENS PRESSURE CONTROL VALVE PCV-5808 AND PREVENTS THE BOILERS FROM BEING STARTED.

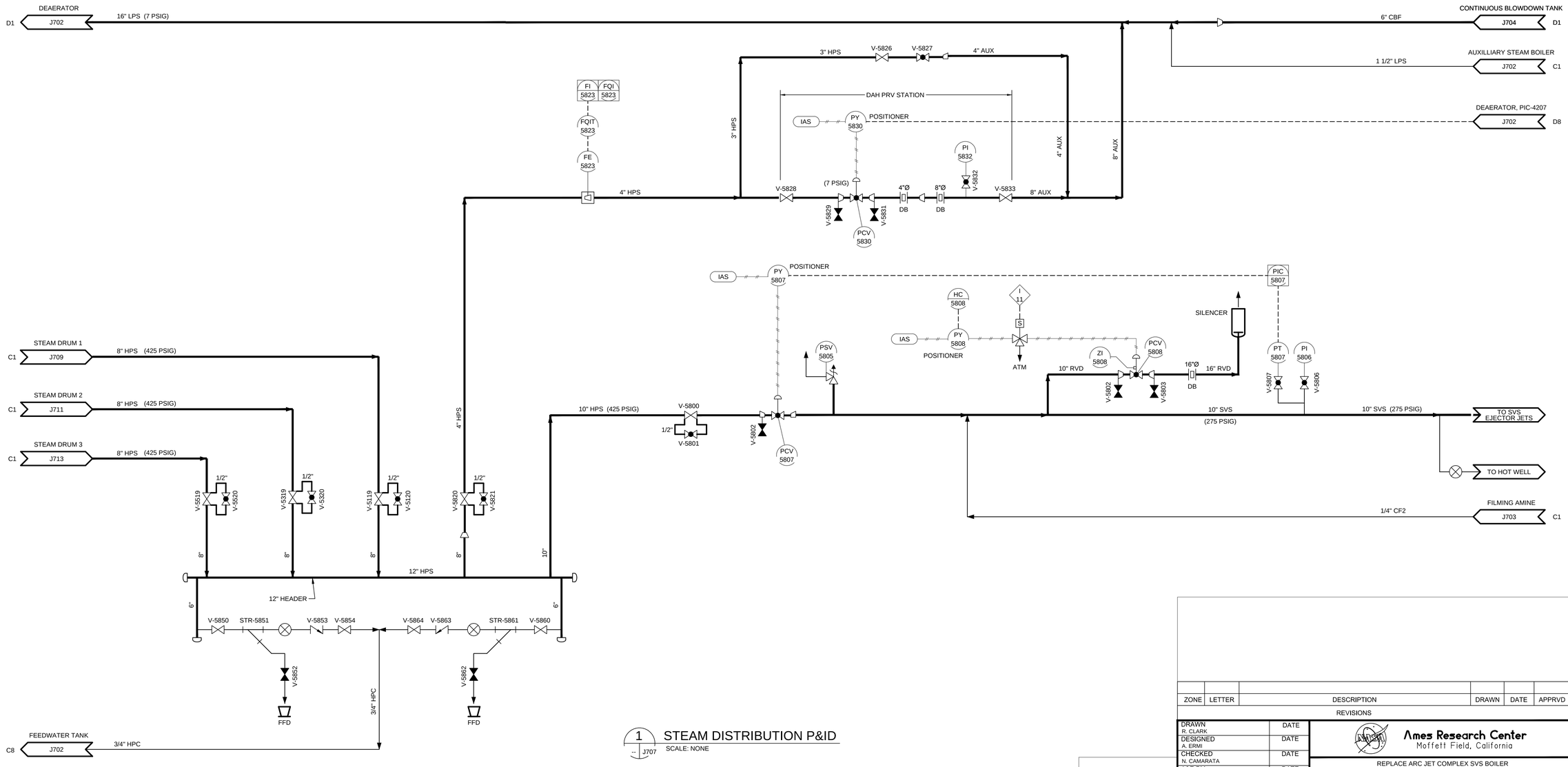

1 / -- J707 STEAM DISTRIBUTION P&ID
SCALE: NONE

ZONE	LETTER	DESCRIPTION	DRAWN	DATE	APPRVD

REVISIONS

DRAWN R. CLARK	DATE	Ames Research Center Moffett Field, California
DESIGNED A. ERMI	DATE	
CHECKED N. CAMARATA	DATE	REPLACE ARC JET COMPLEX SVS BOILER
A&E PM G.HITE	DATE	INSTRUMENTATION & CONTROL
NASA PM W.LEE	DATE	STEAM DISTRUBUTION P&ID
REQUESTER G.RAISCHE	DATE	
R&QA	DATE	
SAFETY/PSM	DATE	
SUPERVISOR S.FRANKEL	DATE	

REGISTERED PROFESSIONAL ENGINEER FREDERICK M. JONES No. E14616 ELECTRICAL STATE OF CALIFORNIA

SIZE	CAGE CODE		REV
D	25307	231-1300-J707	
SCALE NONE		INDEX	SHEET OF

FILE NAME: 231-P&ID.DWG 12/12/2012

DWG: P:\NASA Ames1 Replace Arc Jet Boiler\CAD\P&ID\Sheet\231-P&ID.dwg Version: 18.2s (LMS Tech) User: davisonv
DATE: Dec 10, 2012 - 4:20:37 pm

DWG NO.	SH.	REV
A231-1300-J708		

SHEET NOTES

1. SEE DRAWING J001 FOR GENERAL NOTES, ABBREVIATIONS AND SYMBOLS.
2. VENDOR WILL DETERMINE CONTROLS AND INDICATIONS FOR THE BOILERS. TAG NAMES ARE PROVIDED FOR GUIDANCE.
3. XX/XXX : INDICATES MINIMUM SIGNALS TO BE PROVIDED TO THE SVS STEAM PLANT CONTROL SYSTEM.

KEY NOTES

1. BY BOILER MANUFACTURER.

INTERLOCKS

I 6 — BOILER 1 FEEDWATER VALVE LCV-5005 OPEN AND COMMAND TO OPERATE BOILER 1 BY MASTER CONTROLLER OPENS THE CHEMICAL FEED SOLONOID VALVES SOV-4480 AND SOV-4484 (DRAWING J703) TO BOILER 1 STEAM DRUM.

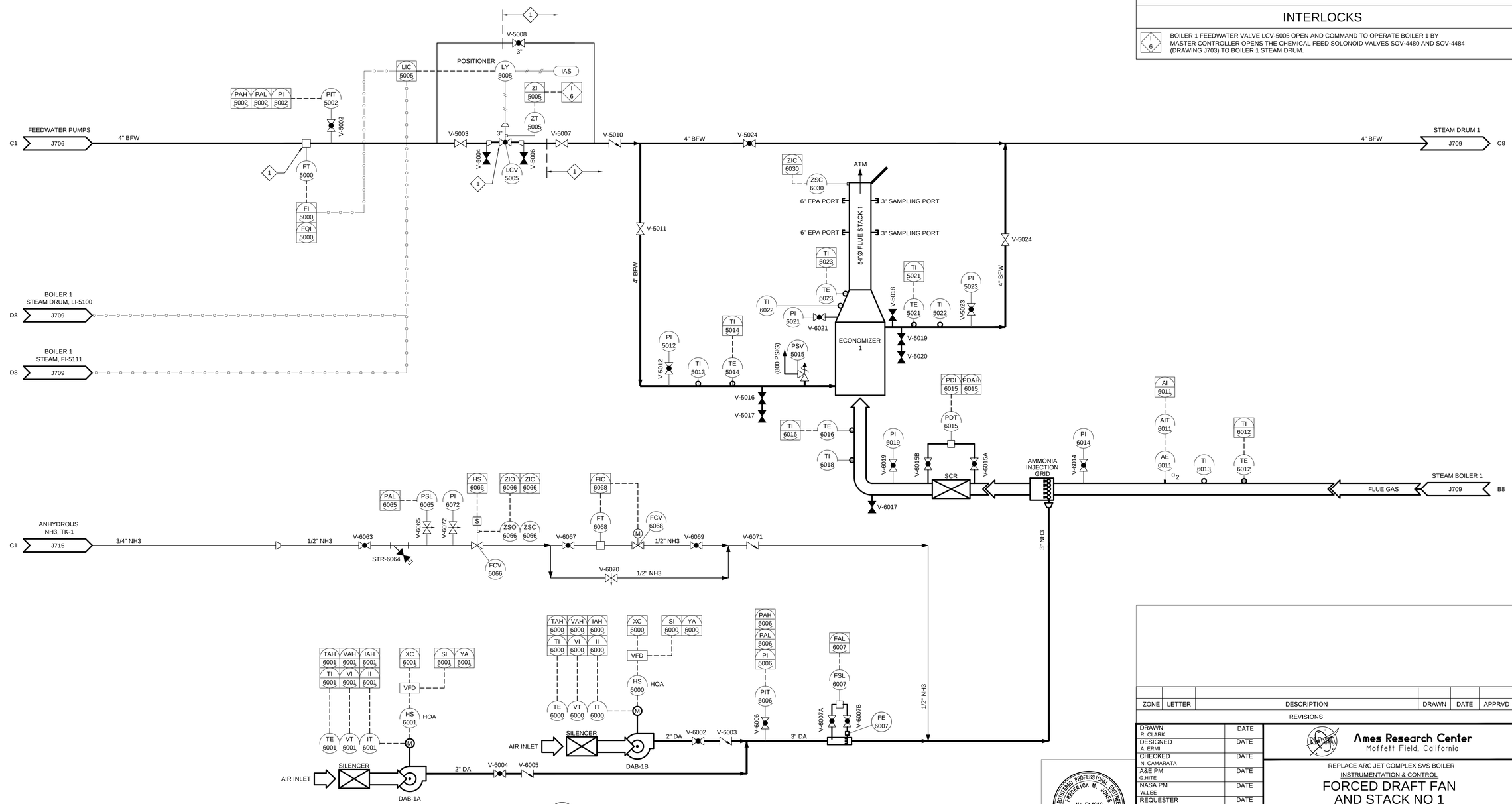

1 — J708 FORCED DRAFT FAN AND STACK NO 1 P&ID
SCALE: NONE

ZONE	LETTER	DESCRIPTION	DRAWN	DATE	APPRVD

REVISIONS

DRAWN R. CLARK	DATE	Ames Research Center, Moffett Field, California
DESIGNED A. ERMI	DATE	
CHECKED N. CAMARATA	DATE	REPLACE ARC JET COMPLEX SVS BOILER
A&E PM G.HITE	DATE	INSTRUMENTATION & CONTROL
NASA PM W.LEE	DATE	FORCED DRAFT FAN AND STACK NO 1 P&ID
REQUESTER G.RAISCHE	DATE	
R&QA	DATE	
SAFETY/PSM	DATE	
SUPERVISOR S.FRANKEL	DATE	

REGISTERED PROFESSIONAL ENGINEER FREDERICK M. JONES No. E14616 ELECTRICAL STATE OF CALIFORNIA

SIZE	CAGE CODE		REV
D	25307	231-1300-J708	
SCALE NONE		INDEX	SHEET OF

FILE NAME: 231-P&ID.DWG 12/12/2012

DWG: P:\NASA Ames\1 Replace Arc Jet Boiler\CAD\P&ID\Sheet\231-P&ID.dwg Version: 18.2s (LMS Tech) User: davisonv
DATE: Dec 10, 2012 - 4:20:42 pm

DWG NO.	SH.	REV
A231-1300-J709		

SHEET NOTES

1. SEE DRAWING J001 FOR GENERAL NOTES, ABBREVIATIONS AND SYMBOLS.
2. VENDOR WILL DETERMINE CONTROLS AND INDICATIONS FOR THE BOILERS. TAG NAMES ARE PROVIDED FOR GUIDANCE.
3. XX/XXX : INDICATES MINIMUM SIGNALS TO BE PROVIDED TO THE SVS STEAM PLANT CONTROLS SYSTEM.

KEY NOTES

1. BURNER GAS TRAIN INCLUDES SHUTOFF, VENT, SAFETY AND FLOW CONTROL VALVES, GAS FILTER, PRESSURE SWITCHES, PRESSURE REGULATORS AND PRESSURE GAUGES.
2. BURNER/WINDBOX INCLUDES AIR REGISTER, IGNITER AND PILOT & MAIN GAS FLAME DETECTORS.
3. BY BOILER MANUFACTURER.
4. FURNISHED BY BOILER MANUFACTURER.

INTERLOCKS

I/4 — VALVES CV-5700, CV-5703 (DRAWING J711), AND CV-5706 (DRAWING J713) ALL CLOSED PREVENTS PUMPS HXP-2 AND HXP-3 (DRAWING J704) FROM RUNNING.

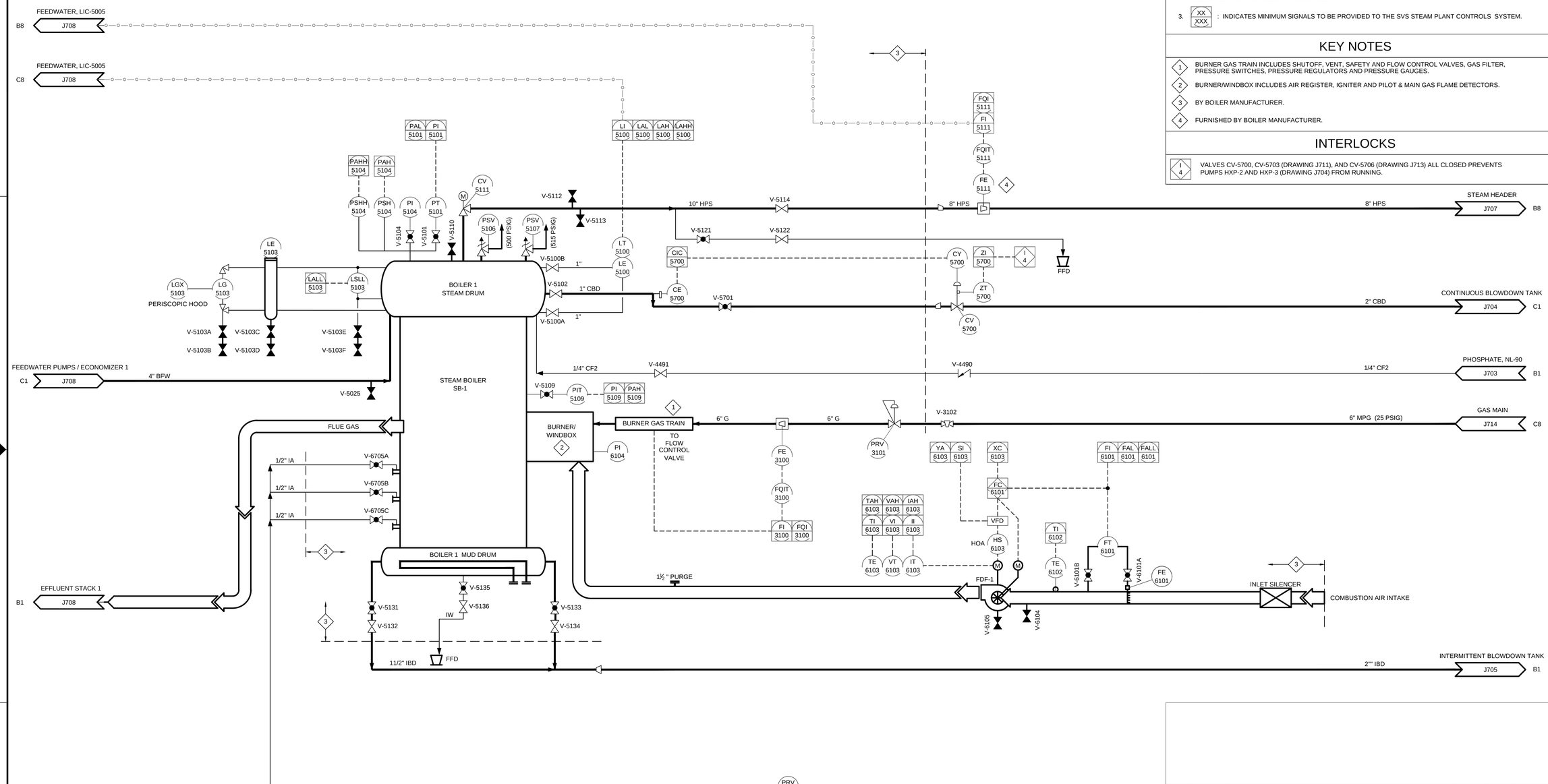

1 STEAM BOILER NO 1 P& ID
-- J709
SCALE: NONE

ZONE	LETTER	DESCRIPTION	DRAWN	DATE	APPRVD

REVISIONS

DRAWN R. CLARK	DATE
DESIGNED A. ERMI	DATE
CHECKED N. CAMARATA	DATE
A&E PM G.HITE	DATE
NASA PM W.LEE	DATE
REQUESTER G.RAISCHE	DATE
R&QA	DATE
SAFETY/PSM	DATE
SUPERVISOR S.FRANKEL	DATE

REGISTERED PROFESSIONAL ENGINEER — FREDERICK M. JONES — No. E14616 — ELECTRICAL — STATE OF CALIFORNIA

Ames Research Center
Moffett Field, California

REPLACE ARC JET COMPLEX SVS BOILER
INSTRUMENTATION & CONTROL
STEAM BOILER NO 1
P&ID

SIZE	CAGE CODE	REV
D	25307	231-1300-J709
SCALE NONE	INDEX	SHEET OF

FILE NAME: 231-P&ID.DWG 12/12/2012

DWG: P:\NASA Ames\1 Replace Arc Jet Boiler\CAD\P&ID\Sheet\231-P&ID.dwg Version: 18.2s (LMS Tech) User: davisonv
DATE: Dec 10, 2012 - 4:20:47 pm

DWG NO.	SH.	REV
A231-1300-J710		

SHEET NOTES

1. SEE DRAWING J001 FOR GENERAL NOTES, ABBREVIATIONS AND SYMBOLS.
2. VENDOR WILL DETERMINE CONTROLS AND INDICATIONS FOR THE BOILERS. TAG NAMES ARE PROVIDED FOR GUIDANCE.
3. XX/XXX : INDICATES MINIMUM SIGNALS TO BE PROVIDED TO THE SVS STEAM PLANT CONTROLS SYSTEM.

KEY NOTES

1. BY BOILER MANUFACTURER.

INTERLOCKS

I 7 — BOILER 2 FEEDWATER VALVE LCV-5205 OPEN AND COMMAND TO OPERATE BOILER 2 BY MASTER CONTROLLER OPENS THE CHEMICAL FEED SOLENOID VALVES SOV-4482 AND SOV-4486 (IF BOILER 1 ALSO SELECTED) OR VALVES SOV-4481 AND SOV-4485 (IF BOILER 3 ALSO SELECTED) (DRAWING J703) TO BOILER 2 STEAM DRUM.

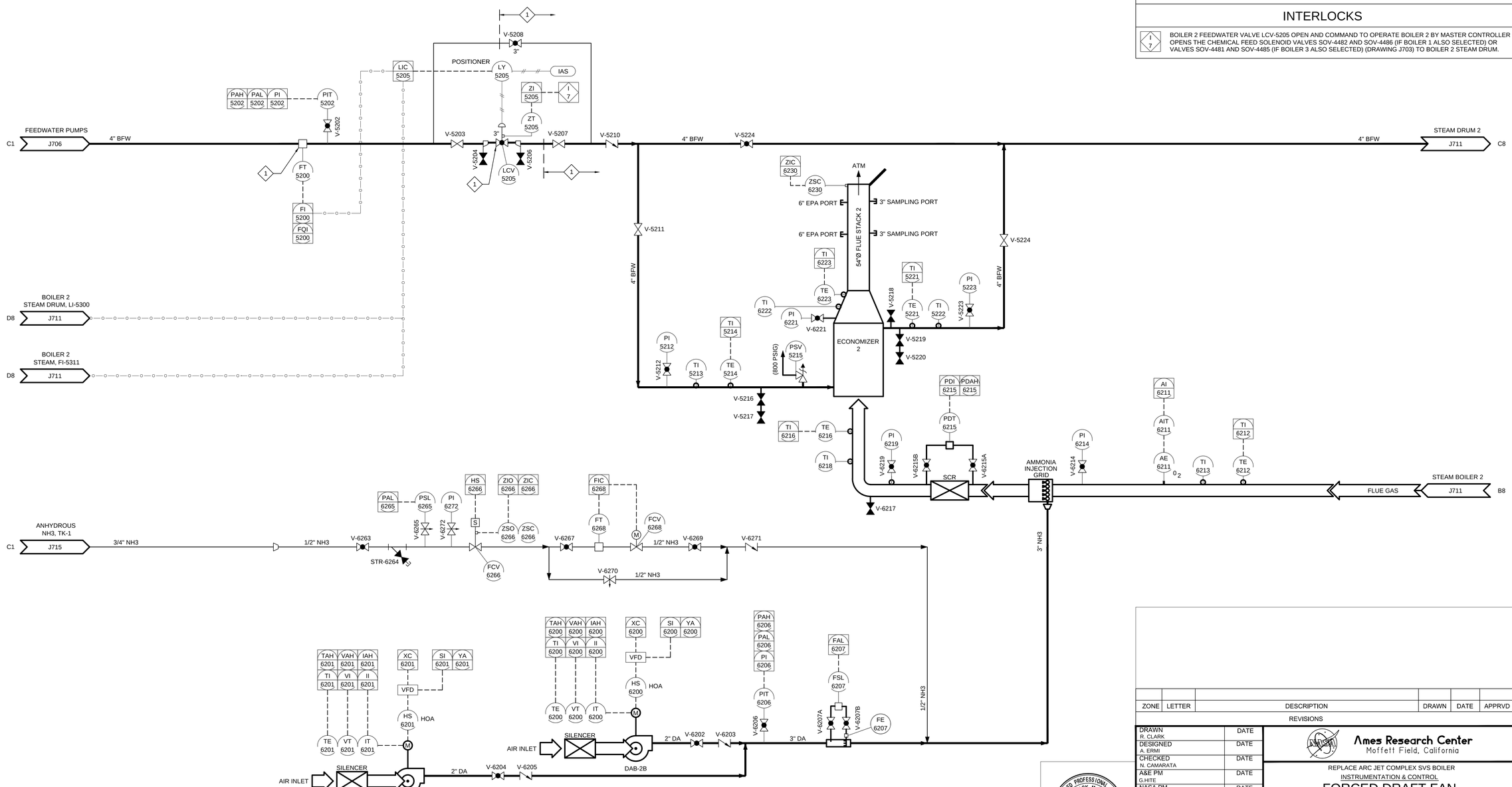

1 J710 FORCED DRAFT FAN AND STACK NO 2 P&ID
SCALE: NONE

ZONE	LETTER	DESCRIPTION	DRAWN	DATE	APPRVD

REVISIONS

DRAWN R. CLARK	DATE	
DESIGNED A. ERMI	DATE	
CHECKED N. CAMARATA	DATE	
A&E PM G.HITE	DATE	
NASA PM W.LEE	DATE	
REQUESTER G.RAISCHE	DATE	
R&QA	DATE	
SAFETY/PSM	DATE	
SUPERVISOR S.FRANKEL	DATE	

REGISTERED PROFESSIONAL ENGINEER FREDERICK M. JONES No. E14616 ELECTRICAL STATE OF CALIFORNIA

Ames Research Center
Moffett Field, California

REPLACE ARC JET COMPLEX SVS BOILER
INSTRUMENTATION & CONTROL

FORCED DRAFT FAN AND STACK NO 2 P&ID

SIZE	CAGE CODE		REV
D	25307	231-1300-J710	
SCALE NONE		INDEX	SHEET OF

FILE NAME: 231-P&ID.DWG 12/12/2012

DWG: P:\nasa ames\1 replace arc jet boiler\CAD\P&ID\Sheet\231-P&ID.dwg Version: 18.2s (LMS Tech) User: davisonv
DATE: Dec 11, 2012 - 8:51:25 am

DWG NO.	SH.	REV
A231-1300-J711		

SHEET NOTES

1. SEE DRAWING J001 FOR GENERAL NOTES, ABBREVIATIONS AND SYMBOLS.
2. VENDOR WILL DETERMINE CONTROLS AND INDICATIONS FOR THE BOILERS. TAG NAMES ARE PROVIDED FOR GUIDANCE.
3. XX/XXX : INDICATES MINIMUM SIGNALS TO BE PROVIDED TO THE SVS STEAM PLANT CONTROLS SYSTEM.

KEY NOTES

1. BURNER GAS TRAIN INCLUDES SHUTOFF, VENT, SAFETY AND FLOW CONTROL VALVES, GAS FILTER, PRESSURE SWITCHES, PRESSURE REGULATORS AND PRESSURE GAUGES.
2. BURNER/WINDBOX INCLUDES AIR REGISTER, IGNITER AND PILOT & MAIN GAS FLAME DETECTORS.
3. BY BOILER MANUFACTURER.
4. FURNISHED BY BOILER MANUFACTURER.

INTERLOCKS

I 4 — VALVES CV-5703, CV-5700 (DRAWING J709), AND CV-5706 (DRAWING J713) ALL CLOSED PREVENTS PUMPS HXP-2 AND HXP-3 (DRAWING J704) FROM RUNNING.

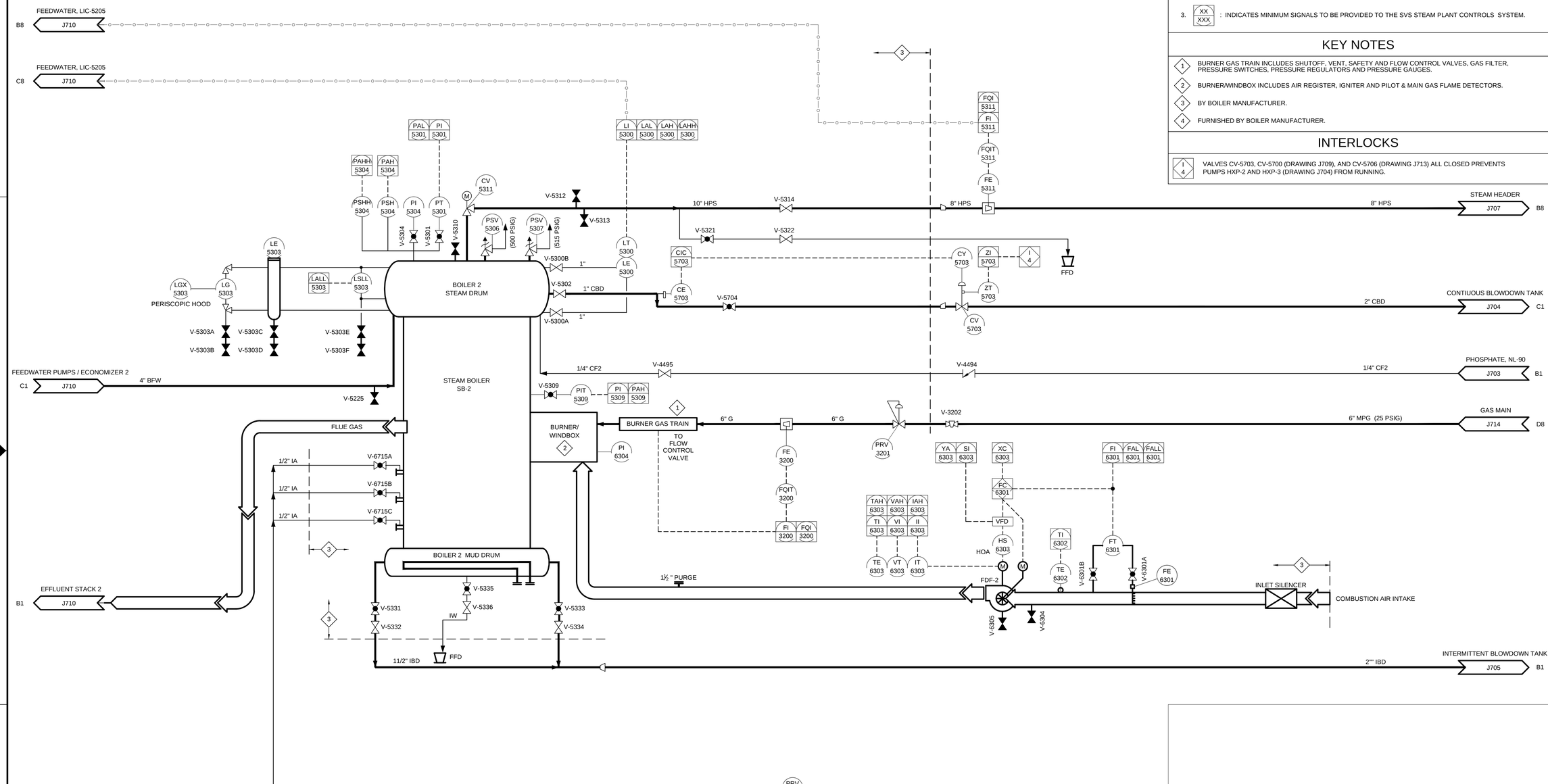

1 STEAM BOILER NO 2 P&ID
-- J711 SCALE: NONE

ZONE	LETTER	DESCRIPTION	DRAWN	DATE	APPRVD

REVISIONS

DRAWN R. CLARK	DATE
DESIGNED A. ERMI	DATE
CHECKED N. CAMARATA	DATE
A&E PM G.HITE	DATE
NASA PM W.LEE	DATE
REQUESTER G.RAISCHE	DATE
R&QA	DATE
SAFETY/PSM	DATE
SUPERVISOR S.FRANKEL	DATE

REGISTERED PROFESSIONAL ENGINEER FREDERICK M. JONES No. E14616 ELECTRICAL STATE OF CALIFORNIA

Ames Research Center
Moffett Field, California

REPLACE ARC JET COMPLEX SVS BOILER
INSTRUMENTATION & CONTROL
STEAM BOILER NO 2
P&ID

SIZE	CAGE CODE	REV
D	25307	A 231-1300-J711
SCALE NONE	INDEX	SHEET OF

FILE NAME: 231-P&ID.DWG 12/12/2012

DWG: P:\NASA Ames\1 Replace Arc Jet Boiler\CAD\P&ID\Sheet\231-P&ID.dwg Version: 18.2s (LMS Tech) User: davisonv
DATE: Dec 10, 2012 - 4:20:57 pm

DWG NO.	SH.	REV
A231-1300-J712		

SHEET NOTES

1. SEE DRAWING J001 FOR GENERAL NOTES, ABBREVIATIONS AND SYMBOLS.
2. VENDOR WILL DETERMINE CONTROLS AND INDICATIONS FOR THE BOILERS. TAG NAMES ARE PROVIDED FOR GUIDANCE.
3. XX/XXX : INDICATES MINIMUM SIGNALS TO BE PROVIDED TO THE SVS STEAM PLANT CONTROLS SYSTEM.

KEY NOTES

1. BY BOILER MANUFACTURER.

INTERLOCKS

I/8 BOILER 3 FEEDWATER VALVE LCV-5405 OPEN AND COMMAND TO OPERATE BOILER 3 BY MASTER CONTROLLER OPENS THE CHEMICAL FEED SOLENOID VALVES SOV-4483 AND SOV-4487 (DRAWING J703) TO BOILER 3 STEAM DRUM.

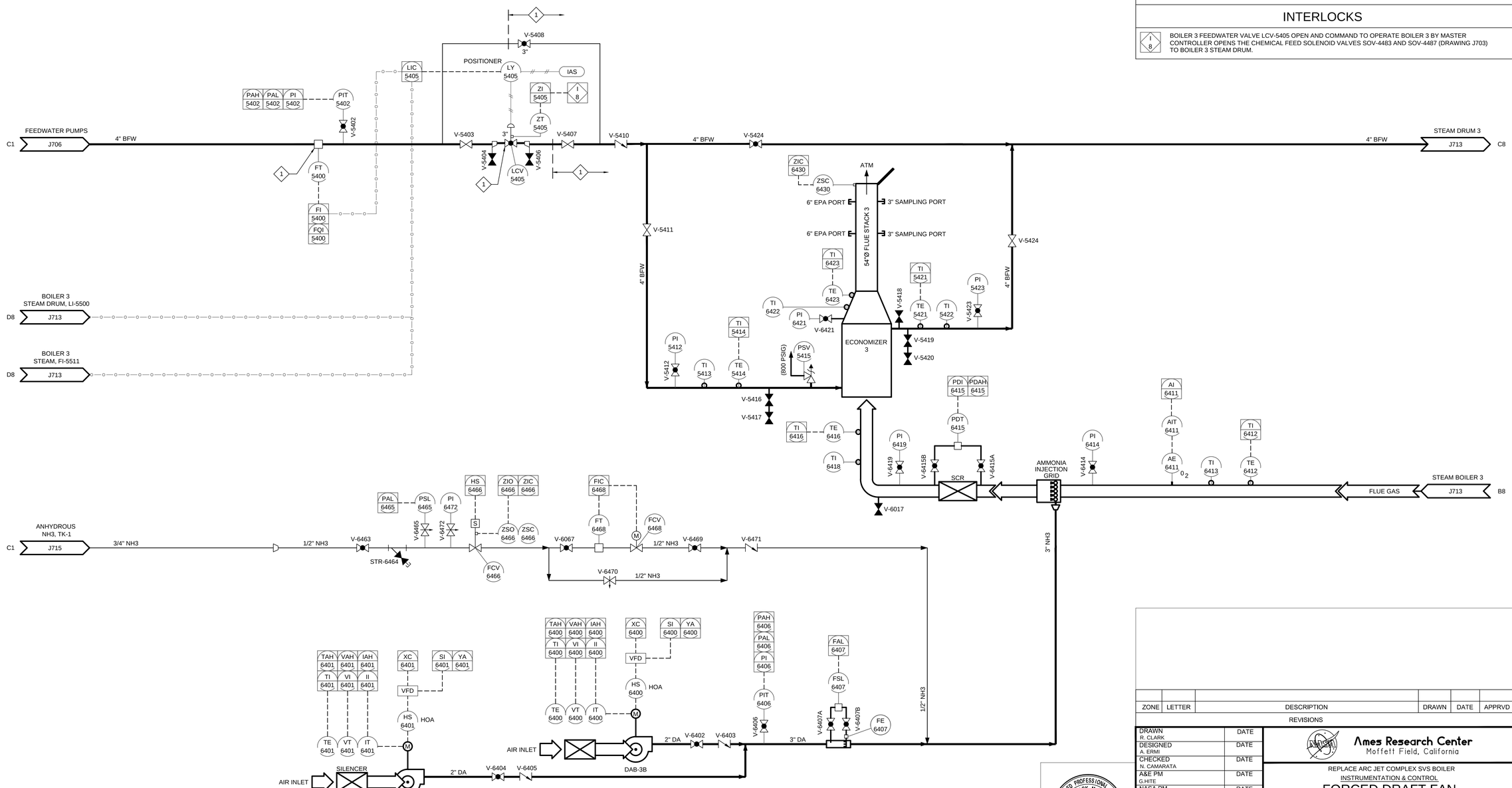

1 FORCED DRAFT FAN AND STACK NO 3 P&ID
J712
SCALE: NONE

ZONE	LETTER	DESCRIPTION	DRAWN	DATE	APPRVD

REVISIONS

DRAWN R. CLARK	DATE	
DESIGNED A. ERMI	DATE	
CHECKED N. CAMARATA	DATE	
A&E PM G.HITE	DATE	
NASA PM W.LEE	DATE	
REQUESTER G.RAISCHE	DATE	
R&QA	DATE	
SAFETY/PSM	DATE	
SUPERVISOR S.FRANKEL	DATE	

REGISTERED PROFESSIONAL ENGINEER FREDERICK M. JONES No. E14616 ELECTRICAL STATE OF CALIFORNIA

Ames Research Center
Moffett Field, California

REPLACE ARC JET COMPLEX SVS BOILER
INSTRUMENTATION & CONTROL

FORCED DRAFT FAN AND STACK NO 3 P&ID

SIZE	CAGE CODE		REV
D	25307	231-1300-J712	
SCALE NONE		INDEX	SHEET OF

FILE NAME: 231-P&ID.DWG 12/12/2012

DWG: P:\nasa ames\1 replace arc jet boiler\CAD\P&ID\Sheet\231-P&ID.dwg Version: 18.2s (LMS Tech) User: davisonv
DATE: Dec 11, 2012 - 8:51:39 am

DWG NO.	SH.	REV
A231-1300-J713		

SHEET NOTES

1. SEE DRAWING J001 FOR GENERAL NOTES, ABBREVIATIONS AND SYMBOLS.
2. VENDOR WILL DETERMINE CONTROLS AND INDICATIONS FOR THE BOILERS. TAG NAMES ARE PROVIDED FOR GUIDANCE.
3. XX/XXX : INDICATES MINIMUM SIGNALS TO BE PROVIDED TO THE SVS STEAM PLANT CONTROLS SYSTEM.

KEY NOTES

1. BURNER GAS TRAIN INCLUDES SHUTOFF, VENT, SAFETY AND FLOW CONTROL VALVES, GAS FILTER, PRESSURE SWITCHES, PRESSURE REGULATORS AND PRESSURE GAUGES.
2. BURNER/WINDBOX INCLUDES AIR REGISTER, IGNITER AND PILOT & MAIN GAS FLAME DETECTORS.
3. BY BOILER MANUFACTURER.
4. FURNISHED BY BOILER MANUFACTURER.

INTERLOCKS

I/4 VALVES CV-5706, CV-5700 (DRAWING J709), AND CV-5703 (DRAWING J711) ALL CLOSED PREVENTS PUMPS HXP-2 AND HXP-3 (DRAWING J704) FROM RUNNING.

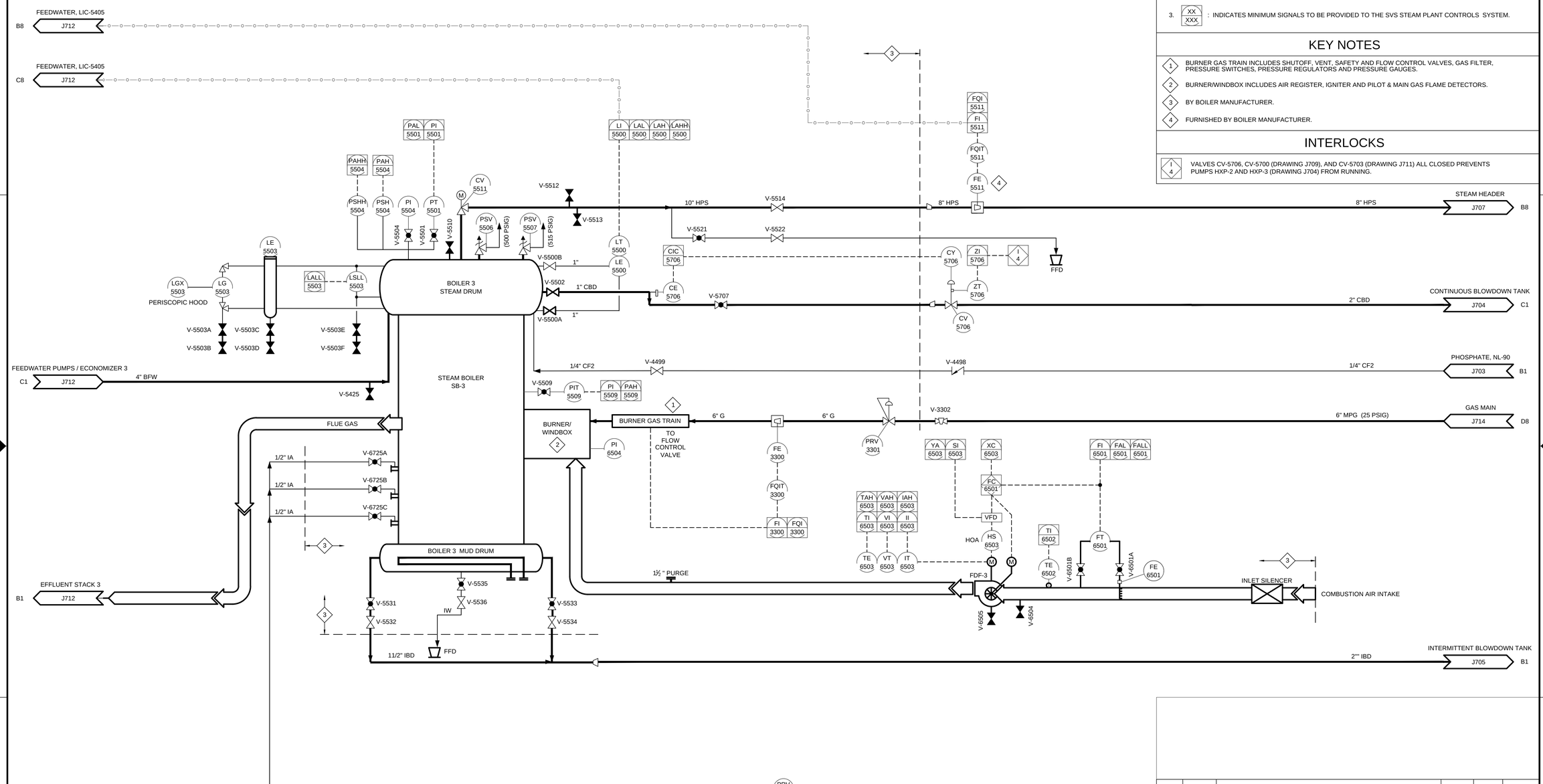

1 STEAM BOILER NO 3 P&ID
-- J713
SCALE: NONE

ZONE	LETTER	DESCRIPTION	DRAWN	DATE	APPRVD

REVISIONS

DRAWN R. CLARK	DATE	Ames Research Center Moffett Field, California
DESIGNED A. ERMI	DATE	
CHECKED N. CAMARATA	DATE	REPLACE ARC JET COMPLEX SVS BOILER INSTRUMENTATION & CONTROL
A&E PM G.HITE	DATE	STEAM BOILER NO 3 P&ID
NASA PM W.LEE	DATE	
REQUESTER G.RAISCHE	DATE	
R&QA	DATE	
SAFETY/PSM	DATE	SIZE D / CAGE CODE 25307 / A 231-1300-J713 / REV
SUPERVISOR S.FRANKEL	DATE	SCALE NONE / INDEX / SHEET / OF

REGISTERED PROFESSIONAL ENGINEER FREDERICK M. JONES No. E14616 ELECTRICAL STATE OF CALIFORNIA

FILE NAME: 231-P&ID.DWG 12/12/2012

DWG: P:\NASA Ames\1 Replace Arc Jet Boiler\CAD\P&ID\Sheet\231-P&ID.dwg Version: 18.2s (LMS Tech) User: davisonv
DATE: Dec 10, 2012 - 4:21:09 pm

DWG NO.	SH.	REV
A231-1300-J714		

SHEET NOTES

1. SEE DRAWING J001 FOR GENERAL NOTES, ABBREVIATIONS AND SYMBOLS.

KEY NOTES

1 NOT USED.

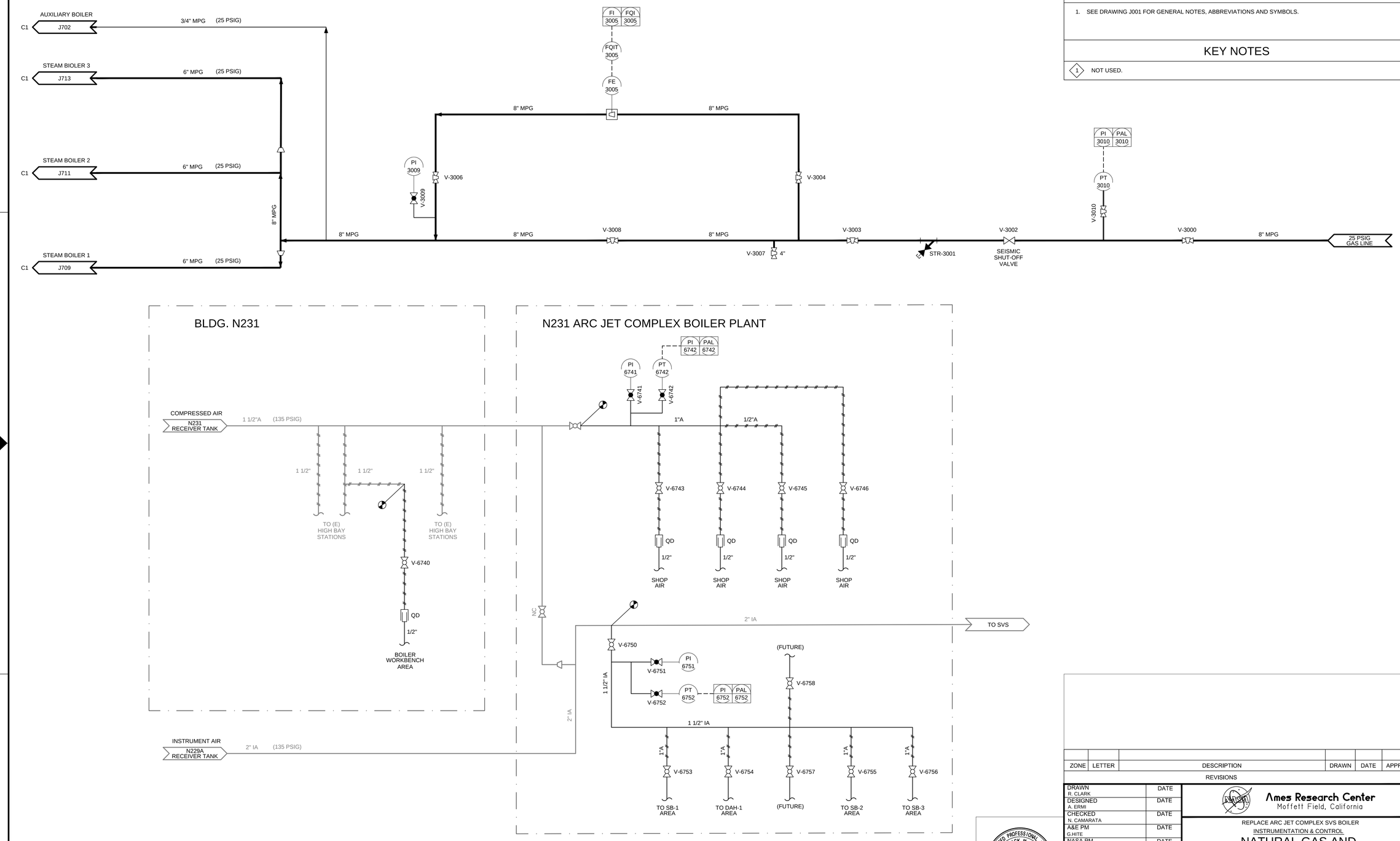

1 NATURAL GAS AND COMPRESSED AIR P&ID
-- J714
SCALE: NONE

REGISTERED PROFESSIONAL ENGINEER FREDERICK M. JONES No. E14616 ELECTRICAL STATE OF CALIFORNIA

ZONE	LETTER	DESCRIPTION	DRAWN	DATE	APPRVD

REVISIONS

DRAWN R. CLARK	DATE	Ames Research Center Moffett Field, California
DESIGNED A. ERMI	DATE	
CHECKED N. CAMARATA	DATE	REPLACE ARC JET COMPLEX SVS BOILER
A&E PM G.HITE	DATE	INSTRUMENTATION & CONTROL
NASA PM W.LEE	DATE	NATURAL GAS AND COMPRESSED AIR P&ID
REQUESTER G.RAISCHE	DATE	
R&QA	DATE	SIZE D / CAGE CODE 25307 / A 231-1300-J714 / REV
SAFETY/PSM	DATE	SCALE NONE / INDEX / SHEET / OF
SUPERVISOR S.FRANKEL	DATE	FILE NAME: 231-P&ID.DWG 12/12/2012

DWG: P:\NASA Ames\1 Replace Arc Jet Boiler\CAD\P&ID\Sheet\231-P&ID.dwg Version: 18.2s (LMS Tech) User: davisonv
DATE: Dec 10, 2012 - 4:21:12 pm

DWG NO.	SH.	REV
A231-1300-J715		

INTERLOCKS

I 14 — PUSHING ANY OF THE NH3 EMERGENCY BUTTONS HS-6630, HS-6631, HS-6632 OR HS-6633 CLOSES THE EMERGENCY SHUTOFF VALVE SOV-6609, AND TRIGGERS AUDIBLE AND VISUAL ALARMS UA-6636, UA-6637, UA-6638 AND UA-6639.

SHEET NOTES

1. SEE DRAWING J001 FOR GENERAL NOTES, ABBREVIATIONS AND SYMBOLS.
2. SEE DRAWING 231-1300-M706 "DIAGRAM-AMMONIA PIPING" FOR ADDITIONAL PIPING DETAILS.

KEY NOTES

1. SPARE 3/4" NOZZLE, PLUGGED.
2. SPARGER TO BE SIZED AS REQUIRED FOR WORST CASE RELIEF VALVE DISCHARGE CAPACITY .
3. FIXED LEVEL GAUGE BLEED VALVE.
4. LOCATE LIGHT ZLC-6609 NEAR VALVE SOV-6609 TO BE VISIBLE OUTSIDE OF BOILER PLANT NE MAN-GATE. LIGHT TO BE ACCOMPANIED WITH LABEL STATING "NH3 EMERGENCY SHUT-OFF CLOSED".
5. LIQUID LEVEL FLOAT GAUGE TO BE PROVIDED BY TANK MANUFACTURER.
6. EXCESS FLOW VALVE.
7. FILL VALVE ASSEMBLY WITH INTEGRAL CHECK VALVE.

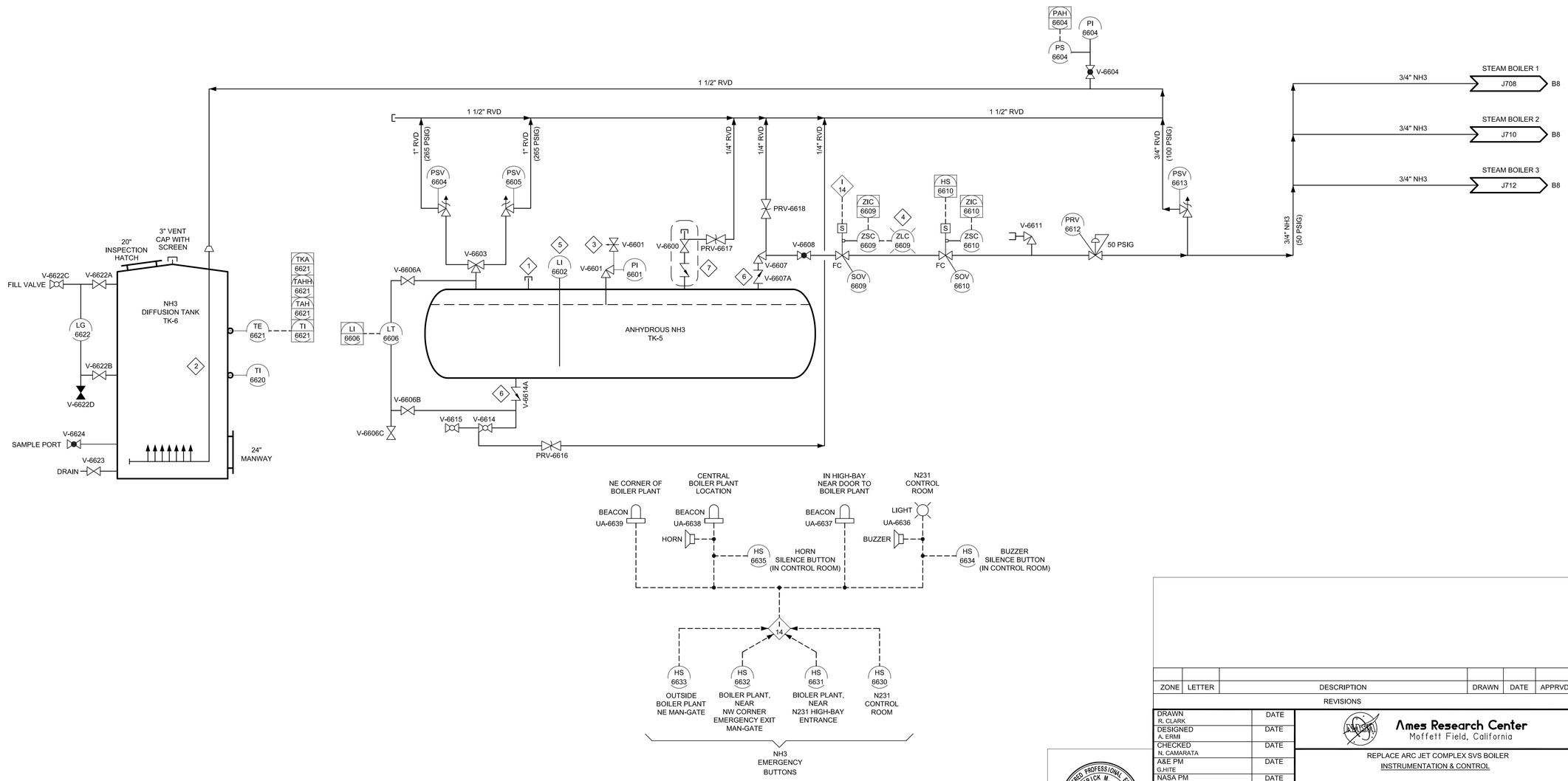

1 -- J715 ANHYDROUS AMMONIA SYSTEM
SCALE: NONE

ZONE	LETTER	DESCRIPTION	DRAWN	DATE	APPRVD

REVISIONS

DRAWN R. CLARK	DATE	
DESIGNED A. ERMI	DATE	
CHECKED N. CAMARATA	DATE	
A&E PM G.HITE	DATE	
NASA PM W.LEE	DATE	
REQUESTER G.RAISCHE	DATE	
R&QA	DATE	
SAFETY/PSM	DATE	
SUPERVISOR S.FRANKEL	DATE	

REGISTERED PROFESSIONAL ENGINEER FREDERICK M. JONES No. E14616 ELECTRICAL STATE OF CALIFORNIA

Ames Research Center
Moffett Field, California

REPLACE ARC JET COMPLEX SVS BOILER
INSTRUMENTATION & CONTROL

ANHYDROUS AMMONIA SYSTEM P&ID

SIZE	CAGE CODE	
D	25307	A 231-1300-J715 REV
SCALE NONE	INDEX	SHEET OF

FILE NAME: 231-P&ID.DWG 01/30/2013

DWG: P:\NASA-Ames\1 Replace Arc Jet Boiler\CAD\P&ID\Sheet\231-P&ID.dwg Version: 18.2s (LMS Tech) User: thomasc
DATE: Jan 30, 2013 - 10:06:05 am

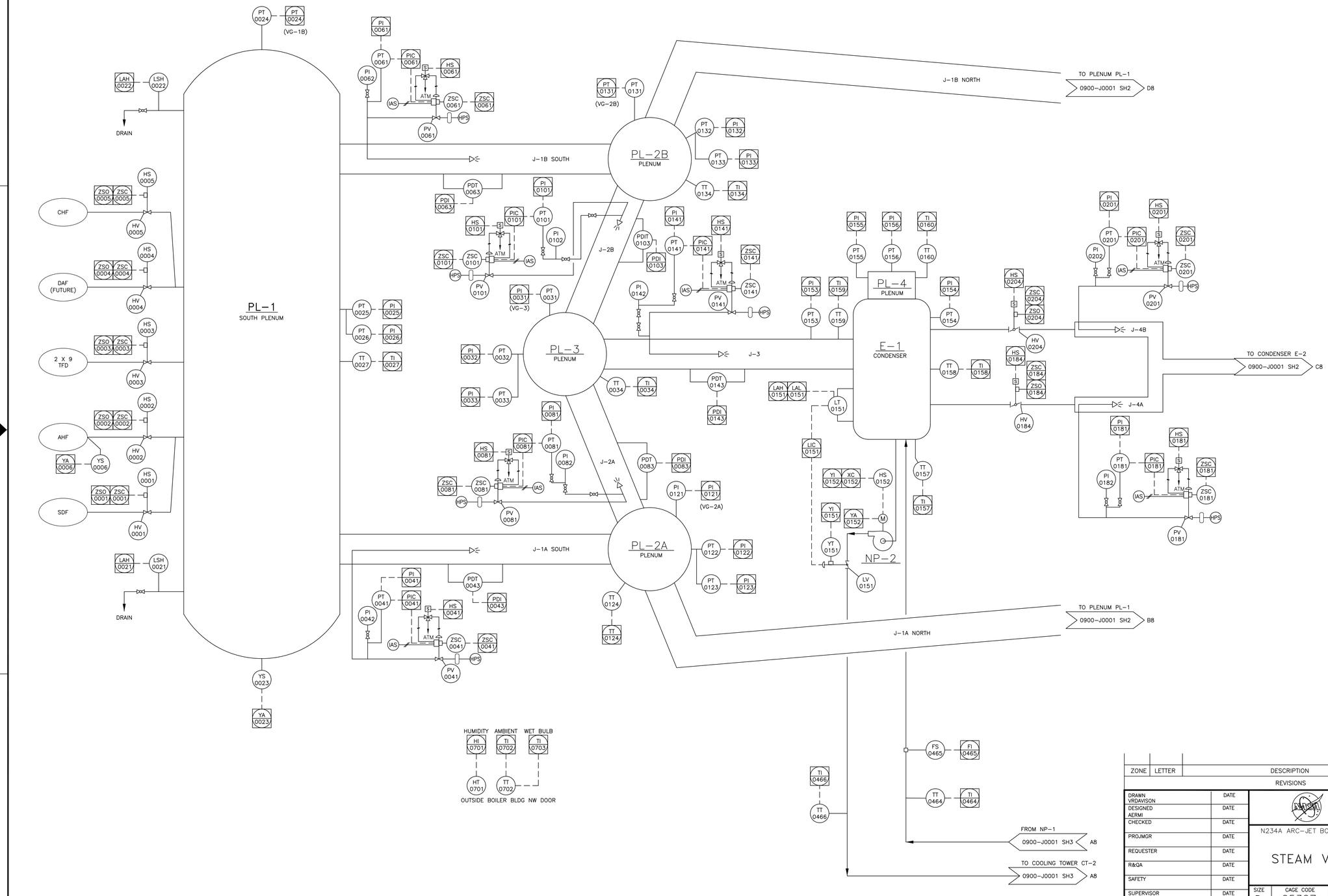

ZONE	LETTER	DESCRIPTION	DRAWN	DATE	APPRVD
		REVISIONS			

DRAWN VRDAVISON	DATE
DESIGNED AERMI	DATE
CHECKED	DATE
PROJMGR	DATE
REQUESTER	DATE
R&QA	DATE
SAFETY	DATE
SUPERVISOR	DATE
	DATE

Ames Research Center
Moffett Field, California

N234A ARC-JET BOILER AND STEAM VACUUM SYSTEM CONTROLS UPGRADE

STEAM VACUUM SYSTEM P&ID

SIZE	CAGE CODE		REV
D	25307	234A-0900-J0001	D
SCALE		INDEX	SHEET 1 OF 3

FILE NAME:

DWG: P:\NASA_Ames\Arc_Jet_System_Upgrade\Sheets\234A-0900-J0001_SHT1.dwg Version: 17.2s (LMS Tech) User: davisonv
DATE: Jan 15, 2010 - 9:27:03 am

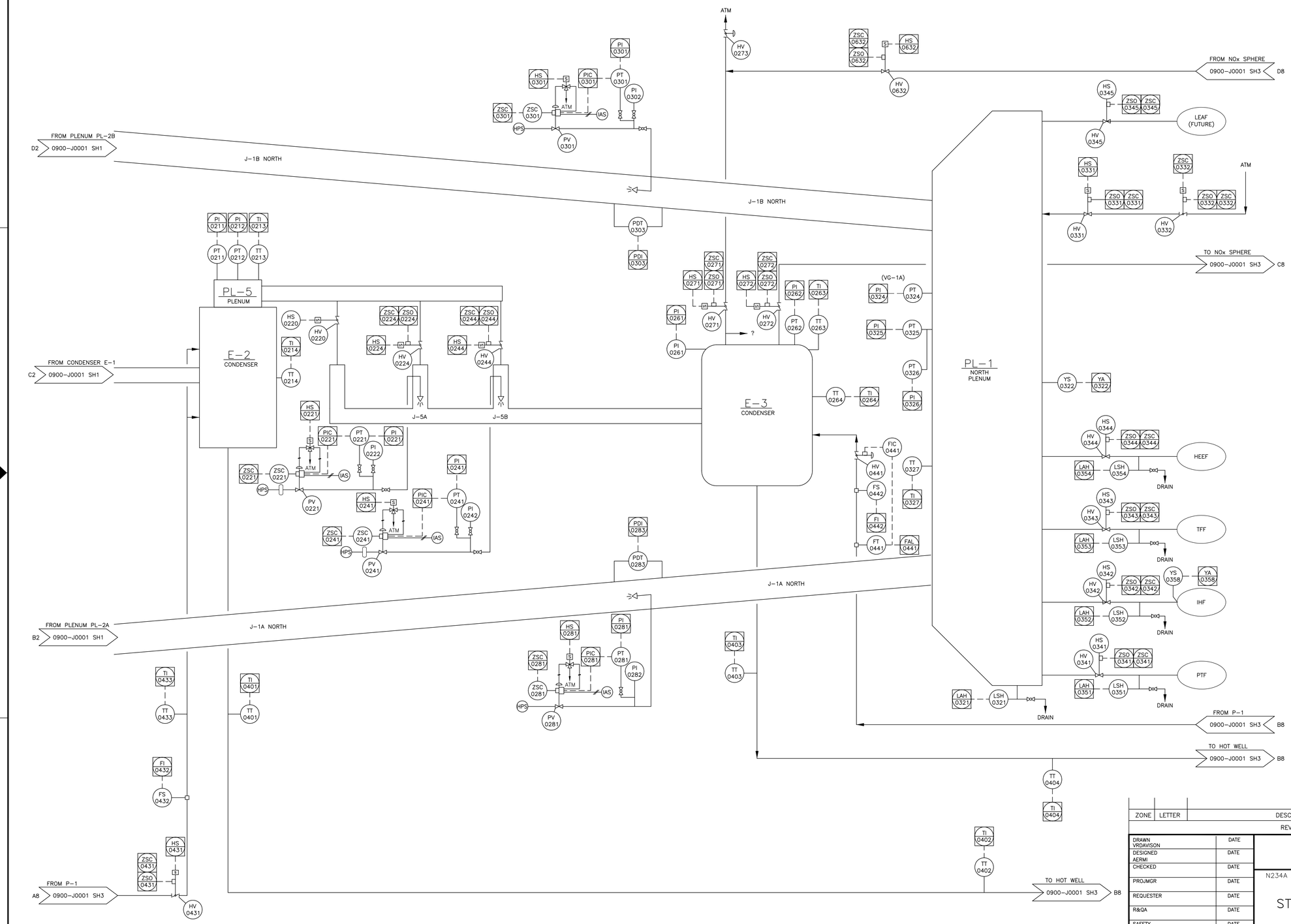

ZONE	LETTER	DESCRIPTION	DRAWN	DATE	APPRVD

REVISIONS

DRAWN VRDAVISON	DATE
DESIGNED AERMI	DATE
CHECKED	DATE
PROJMGR	DATE
REQUESTER	DATE
R&QA	DATE
SAFETY	DATE
SUPERVISOR	DATE
	DATE

Ames Research Center
Moffett Field, California

N234A ARC-JET BOILER AND STEAM VACUUM SYSTEM CONTROLS UPGRADE

STEAM VACUUM SYSTEM P&ID

SIZE	CAGE CODE		REV
D	25307	A_234A-0900-J0001	D
SCALE		INDEX	SHEET 2 OF 3

FILE NAME:

DWG: P:\NASA Ames\Arc Jet System Upgrade\Sheets\X234A-0900-J0001_SHT2.dwg Version: 17.2s (LMS Tech) User: davisonv
DATE: Jan 15, 2010 - 9:27:20 am

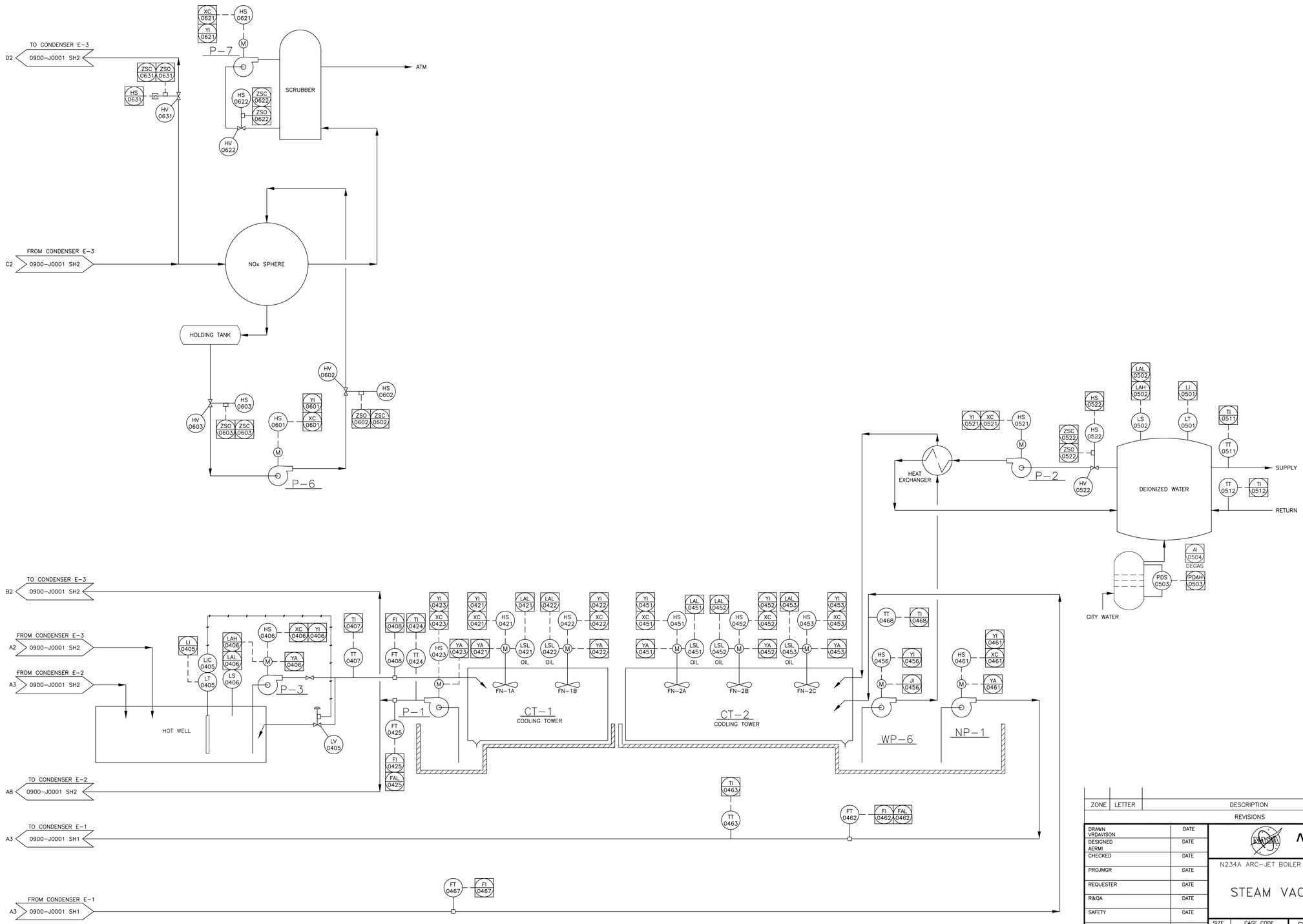

ZONE	LETTER	DESCRIPTION	DRAWN	DATE	APPRVD
		REVISIONS			

DRAWN VRDAVISON	DATE
DESIGNED AERMI	DATE
CHECKED	DATE
PROJMGR	DATE
REQUESTER	DATE
R&QA	DATE
SAFETY	DATE
SUPERVISOR	DATE
	DATE

Ames Research Center
Moffett Field, California

N234A ARC-JET BOILER AND STEAM VACUUM SYSTEM CONTROLS UPGRADE

STEAM VACUUM SYSTEM P&ID

SIZE	CAGE CODE	
D	25307	A 234A-0900-J0001 REV D
SCALE		INDEX SHEET 3 OF 3

FILE NAME:

DWG: P:\NASA Ames\Arc Jet System Upgrade\Sheets\A234A-0900-J0001_SHT3.dwg Version: 17.2s (LMS Tech) User: davisonv
DATE: Jan 15, 2010 - 9:28:17 am