Common Berthing Mechanism to Pressurized Elements Interface Control Document Part 1

International Space Station Program

Revision H
October 25, 2005

National Aeronautics and Space Administration
International Space Station Program
Johnson Space Center
Houston, Texas
Contract No. NAS15–10000

REVISION AND HISTORY PAGE

REV.	DESCRIPTION	PUB. DATE
–	BASELINE ISSUE (REFERENCE SSCBD BB003287 EFF. 02–25–92)	02–92
	IRNs 0001 – 0035 (REFERENCE SSCBD BB003287A EFF. 04–03–92)	04–92
	IRN 0036 (REFERENCE SSCBD BB003287B EFF. 07–16–92)	07–92
A	REVISION A (REFERENCE IRN 0037, SSCBD BB003287B EFF. 07–16–92)	07–92
	IRN 0038 (REFERENCE SSCBD BB003287C EFF. 11–13–92)	12–92
	IRNs 0040 – 0046 (REFERENCE SSCBD BB003287C EFF. 11–13–92)	12–92
	IRN 0048 (REFERENCE SSCBD BB003287C EFF. 11–13–92)	12–92
	IRN 0049 (REFERENCE SSCBD BB003287D EFF. 12–18–92)	01–93
B	REVISION B (REFERENCE IRN 0050, SSCBD BB003287D EFF. 12–18–92)	01–93
C	REVISION C (REFERENCE SSCBD 000008, EFF. 3–23–94)	03–94
	IRN 000067 (REFERENCE SSCD 000067 EFF. 10–11–94)	02–25–97
	IRN 000145 (REFERENCE SSCD 000145 EFF. 10–31–95) (Release to File)	03–02–99
	IRN 000061 (REFERENCE SSCD 000061 EFF. 12–19–95) (Release to File)	03–02–99
	IRN 000179 (REFERENCE SSCD 000179, EFF. 04–26–96) (Release to File)	03–02–99
D	REVISION D (REFERENCE SSCD 000428, EFF. 03–28–97)	04–01–97
	IRN 000604 (REFERENCE SSCD 000604, EFF. 01–17–97) (Release to File)	03–02–99
	INCORPORATES THE FOLLOWING PIRNS: 41004–NA–0026, NA–0027, NA–0028, NA–0029, NA–0030	
E	REVISION E (REFERENCE SSCD 000838, EFF. 04–14–98) (Release to File)	03–02–99
	INCORPORATES THE FOLLOWING PIRNS: 41004–NA–0025, 41004–NA–0031, 41004–NA–0032B	
F	REVISION F (REFERENCE SSCD 001164, EFF. 08–11–98)	03–02–99
	INCORPORATES THE FOLLOWING PIRNS: 41004–AS–0012A, 41004–AS–0014A, 41004–NA–0035, 41004–NA–0036A	

REVISION AND HISTORY PAGE

REV.	DESCRIPTION	PUB. DATE
G	REVISION G (REFERENCE SSCD 002448, EFF. 06–30–99) Incorporate the following approved PIRNs which were created by the applicable Changes listed below: SSCN 002448 – PIRNs 41004–AS–0013C, 41004–NA–0042 SSCN 001555 – PIRN 41004–NA–0041A SSCN 001481 – PIRNs 41004–NA–0040A SSCN 001594 – PIRN 41004–NA–0038A SSCN 001465 – PIRN 41004–NA–0037B	07–14–99
H	REVISION H (REFERENCE SSCD 009719, EFF. TBD) Incorporate the following approved PIRNs which were created by the applicable Changes listed below: SSCN 009719 – PIRN 41004–ES–0016 Rev D also closed SSCN 000554. Rev G also closed SSCNs 000600, and 0000720. The following changes were evaluated and were determined to be of no impact: SSCNs 000780, 001386, 001938, and 003488.	TBD

INTERNATIONAL SPACE STATION PROGRAM

COMMON BERTHING MECHANISM TO PRESSURIZED ELEMENTS
INTERFACE CONTROL DOCUMENT
PART 1

OCTOBER 25, 2005

PREPARED BY:	Warren England	BHOU
	PRINT NAME	ORGN
	/s/Warren England	12/25/05
	SIGNATURE	DATE
CHECKED BY:	Quentin Henry	BHOU
	PRINT NAME	ORGN
	SIGNATURE	DATE
DQA:	Merry McClain	BHOU
	PRINT NAME	ORGN
	SIGNATURE	DATE

Node 2 Project Concurrence

Alenia	/s/Walter Cugno Walter Cugno	11/21/97 Date
ASI	/s/Andrea Lorenzoni Andrea Lorenzoni	1/7/98 Date
NASA–MSFC	/s/Robert Crumbley Robert Crumbley	11/21/97 Date

PREFACE

SSP 41004, Common Berthing Mechanism to Pressurized Elements Interface Control Document (ICD) shall be implemented on all new Program contractual and internal activity and shall be included in any existing contracts through contract changes. This document is under the control of the Space Station Control Board (SSCB); any changes or revisions will be approved by the SSCB.

INTERNATIONAL SPACE STATION PROGRAM

COMMON BERTHING MECHANISM TO PRESSURIZED ELEMENTS INTERFACE CONTROL DOCUMENT PART 1

LIST OF CHANGES

OCTOBER 25, 2005

(SHEET 1 OF 1)

All changes to paragraphs, tables, and figures in this document are shown below:

SSCBD	ENTRY DATE	CHANGE	PARAGRAPH(S)
001662		N/A	2.1
002135		N/A	2.1
002915		N/A	2.1
003384		N/A	2.1
009719		ES–0016	3B.2.2.4.2.1

1.0 INTRODUCTION

The Space Station Common Berthing Mechanism (CBM) will be used on the Agenzia Spaziale Italiana (ASI) pressurized element, European Space Agency (ESA) pressurized element, the National Space Development Agency of Japan (NASDA) pressurized elements, and the National Aeronautics and Space Administration (NASA) pressurized elements including the Z1 Integrated Truss Segment, all of which are hereinafter referred to simply as PEs.

There are two types of CBMs used on the Space Station. These are referred to as the Active Common Berthing Mechanism (ACBM) and the Passive Common Berthing Mechanism (PCBM). Section 3A paragraphs are applicable to the ACBM only unless referenced by a PCBM paragraph. Section 3B paragraphs are applicable to the PCBM only. 'CBM' will be used to refer to either the ACBM or the PCBM, interchangeably.

1.1 PURPOSE

The purpose of this document is to provide definition of the structural/mechanical, electrical, and data interface functional requirements between the CBM and the PEs. The CBM provides a means of structural attachment and pressurized crew transfer between PEs when berthed.

1.2 SCOPE

The scope of this document is limited to interfaces between the CBM and the PE.

1.3 PRECEDENCE

In the event of conflict between SSP 41162, Segment Specification for the U.S. On–orbit Segment, and the contents of this ICD, the requirements of SSP 41162 shall take precedence.

1.4 DELEGATION OF AUTHORITY

The Prime Contractor shall delegate the responsibility for preparation and maintenance of this ICD.

1.5 RESPONSIBILITY AND CHANGE AUTHORITY

This document is prepared and maintained in accordance with SSP 30459, NASA Space Station Interface Control Plan.

This Page Intentionally Left Blank

2.0 DOCUMENTS

The following documents of the exact issue shown form a part of this document to the extent specified herein.

2.1 APPLICABLE DOCUMENTS

DOCUMENT NO.	TITLE
ASTM E380 Rev A 1 Jan 93	Standard Practice for Use of the International System of Units (SI) (the Modernized Metric System)
References	3A.1.1.5.1, 3B.1.1.5.1
MIL–STD–1553 Revision B Notice 2 8 Sep 86	Digital Time Division Command/Response Mulitplexer Data Bus
References	3A.2.1.5.1.1, 3A.2.1.5.1.2, 3A.2.1.5.1.3.1, 3A.2.1.5.1.3.2, 3A.2.1.5.1.4, 3A.2.1.5.1.5, 3A.2.2.3.2.4.1, 3A.2.2.5.1.1, 3A.2.2.5.1.2, 3A.2.2.5.1.3.1, 3A.2.2.5.1.3.2, 3A.2.2.5.1.4, 3A.2.2.5.1.5
SSP 30240 Rev C 30 Sep 98	Space Station Grounding Requirements
References	3A.2.1.7.1.3, 3A.2.2.7.1.3, 3B.2.1.4.1.1, 3B.2.2.4.1.1
SSP 30242 Rev E 30 Sep 98	Space Station Cable/Wire Design and Control Requirements for Electromagnetic Compatibility
References	3A.2.1.7.1.5, 3A.2.2.7.1.5
SSP 30243 Rev E 9 Jun 98 DCN 003, 004	Space Systems Requirements for Electromagnetic Compatibility
References	3A.2.1.7.1.1, 3A.2.1.7.1.6, 3A.2.1.7.1.7, 3A.2.2.7.1.1, 3A.2.2.7.1.6, 3A.2.2.7.1.7
SSP 30245 Rev D 4 Jun 98 DCN 004, 005 and 006	Space Station Electrical Bonding Requirements
References	3A.2.1.7.1.4, 3A.2.2.7.1.4, 3B.2.1.4.1.2, 3B.2.2.4.1.2

DOCUMENT NO.	TITLE
SSP 30482 Volume II Rev A 1 Jan 94 DCNs 001, 002, 003, 004, and SSCNs 2135 and 2915 References	Electrical Power Specification and Standard 3A.2.1.7.1.2, 3A.2.1.4.1.1, 3A.2.2.7.1.2
SSP 41140 References	Node Element 1 to U.S. Habitation Element ICD Table 3A.2.1.7.2.1–1
SSP 41141 References	Node Element 1 to U.S. Laboratory Element ICD Table 3A.2.1.7.2.1–1
SSP 41142 References	Node Element 1 to Cupola Element ICD Table 3A.2.1.7.2.1–1, Table 3A.2.1.7.2.2–2
SSP 41143 References	Node Element 2 to U.S. Laboratory Element ICD Table 3A.2.1.7.2.1–1
SSP 41145 References	Node Element 1 to Airlock Element ICD Table 3A.2.1.7.2.1–1
SSP 41150 References	Interface Requirements Document, Space Station Manned Base (SSMB) to Columbus Attached Pressurized Module (APM) Table 3A.2.1.7.2.1–1
SSP 41151 References	Interface Requirements Document,Space Station Manned Base to Japanese Experiment Module 3B.2.1.4.2.1, 3B.2.2.4.2.1, 3A.2.1.6, 3A.2.2.6
SSP 41175–02 Book 2 References	Space Station Management and Control to ISS Software Interface Control Document Paragraph 3.A.2.2.6
SSP 41178–27 Rev B 01 April, 2000 References	Software Interface Control Document Part 1 Internal Multiplexer/Demultiplexer to International Space Station Book 27, Common Berthing Mechanism Interface Paragraph 3.A.2.2.6
SSP 42007 References	United States On–Orbit Segment to Mini Pressurized Logistics Module Interface Control Document, Part 1 Table 3A.2.1.7.2.1–1
SSP 42097 References	Space Station Program Pressurized Mating Adapter 2 & 3 to U.S. Pressurized Elements CORE (Node 2 to PMA) Interface Control Document, Part 1 Table 3A.2.1.7.2.1–1, Table 3A.2.1.7.2.2–2
SSP 42122 References	Node Element 1 to Pressurized Docking Module Table 3A.2.1.7.2.1–1, Table 3A.2.1.7.2.2–2
SSP 44030 References	Integrated TRUSS Segment Z1 to Node 1 ICD Table 3A.2.1.7.2.1–1

DOCUMENT NO.	TITLE
SSP 50005 Rev B 9 Aug 95 DCN 001, 002, 003, 004, 005 and 006	International Space Station Flight Crew Standard
References	3A.2.1.3.2, 3A.2.1.3.2.1, 3A.2.2.3.2, 3A.2.2.3.2.1
SSP 50023 Rev Basic 15 Apr 94	Thermal Control Plan
References	3A.2.1.8, 3A.2.2.8, 3B.2.1.5, 3B.2.2.5
SSQ 21635 Rev H 1 Aug 97 DCN 001, 011, 012, 013, 014 and 015	General Specification for Connectors and Accessories, Electrical, Circular, Miniature, IVA/EVA/Robot Compatible, Space Quality
References	3A.2.1.3.2.3, 3A.2.2.3.2.3
SSQ 21655 Rev E 15 Jul 98	General Specification for Cable, Electrical, MIL–STD–1553B Data Bus, Space Quality
References	3A.2.1.3.2.4.1, 3A.2.2.3.2.4.1
SSQ 21656 Rev C 25 Apr 96 DCN 001 and 002	General Specification for Wire and Cable, Electric, Fluoropolymer–insulated, Nickel Coated Copper or Copper Alloy
References	3A.2.1.3.2.4.2, 3A.2.2.3.2.4.2

2.2 REFERENCE DOCUMENTS

DOCUMENT NO.	TITLE
SSP 30459 Rev F 23 Mar 94 References	NASA Space Station Interface Control Plan 1.5
SSP 41162 References	USOS Segment Specification 1.3
SSP 41175 References	Station Management and Control to ISSA ICD 3A.2.1.6

3A.0 ACTIVE COMMON BERTHING MECHANISM TO PRESSURIZED ELEMENTS INTERFACES

3A.1 GENERAL

This section defines the functional interface requirements between the ACBM and the PEs.

3A.1.1 INTERFACE DESCRIPTION

The ACBM to PE interface consists of structural/mechanical and utility interfaces. A functional interface diagram is shown in Figure 3A.1.1–1, Active Common Berthing Mechanism to Pressurized Element Functional Interface Diagram.

3A.1.1.1 ACTIVE COMMON BERTHING MECHANISM DESCRIPTION

The ACBM is a mechanism, which serves as part of a common PE to PE interface. The ACBM contains the active components necessary to accomplish the PE to PE berthing operation.

3A.1.1.2 PRESSURIZED ELEMENT DESCRIPTION

The PE is any element that utilizes the ACBM for on–orbit berthing to another element.

3A.1.1.3 INTERFACE PLANE DESCRIPTION

The ACBM to PE interface plane lies at the PE bulkhead. The structural/mechanical interface plane is defined at the X_{CBM}=0 plane for the ACBM and at the bulkhead feedthroughs for the ACBM utilities.

3A.1.1.4 COORDINATE SYSTEM

The ACBM coordinate system is shown in Figure 3A.1.1.4–1, Active Common Berthing Mechanism Coordinate System.

3A.1.1.5 ENGINEERING UNITS AND TOLERANCES

Dimensions in this document are shown in the English (inch, pound, second) system of units followed by the equivalent metric value in parenthesis. Measurements may be verified in either system of units.

3A.1.1.5.1 TOLERANCE

Linear tolerances on English dimensions are as indicated in Table 3A.1.1.5.1–1, Linear Tolerances. Linear tolerances on metric dimensions are derived from English measurements and tolerances as defined in ASTM E380, Standard Practice for Use of the International System of Units (SI) (The Modernized Metric System), Section 4.5. Angular tolerances are ±0.1 degrees on all angles, unless otherwise stated.

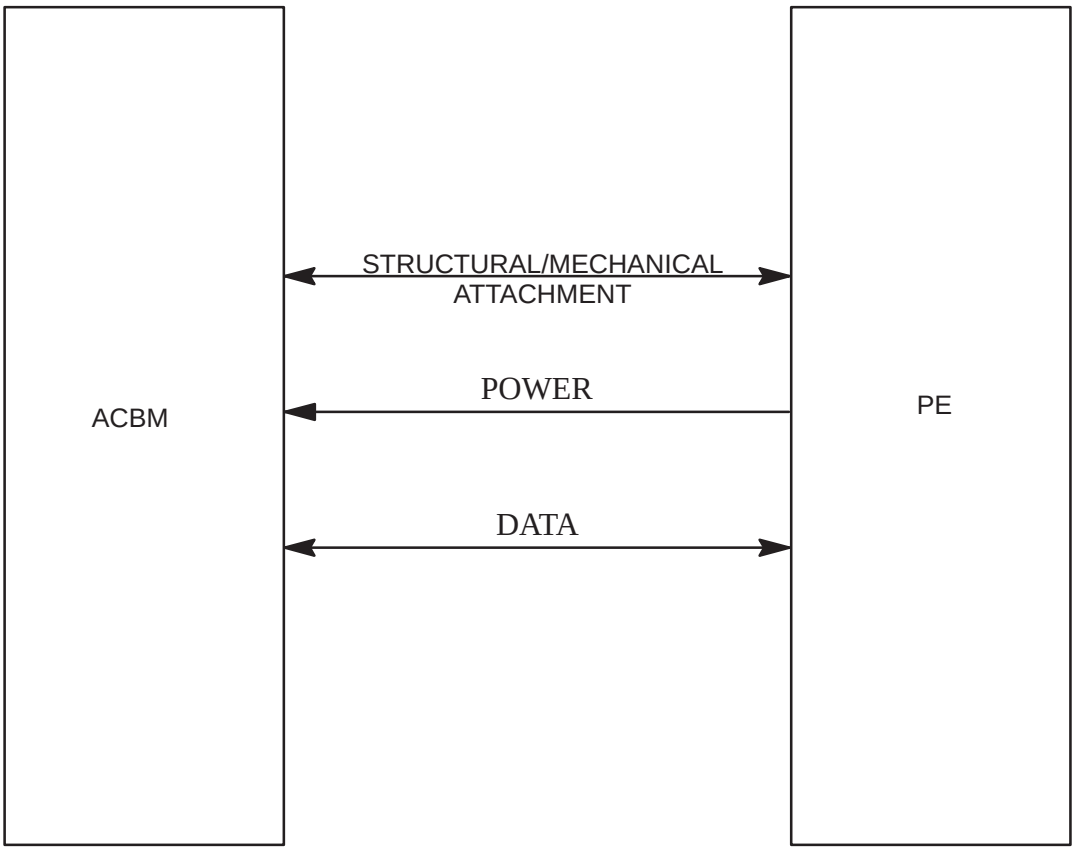

FIGURE 3A.1.1–1 ACTIVE COMMON BERTHING MECHANISM TO PRESSURIZED ELEMENT FUNCTIONAL INTERFACE DIAGRAM

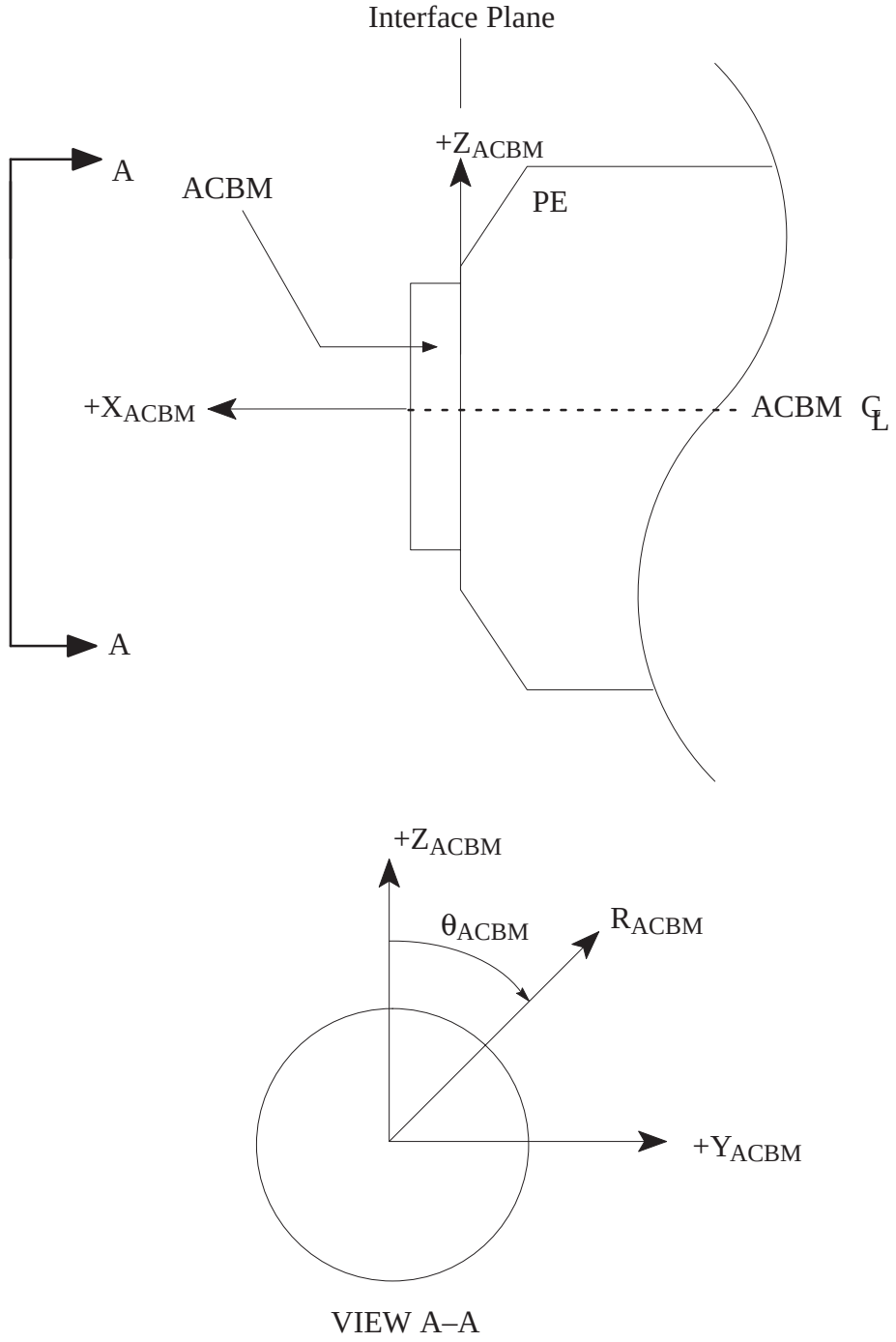

NOTE: R_{ACBM} and θ_{ACBM} define a radial coordinate system.

FIGURE 3A.1.1.4–1 ACTIVE COMMON BERTHING MECHANISM COORDINATE SYSTEM

TABLE 3A.1.1.5.1–1 LINEAR TOLERANCES

ENGLISH DIMENSION	IMPLIED TOLERANCE (INCHES)
X.XX	+/– 0.030
X.XXX	+/– 0.010

3A.1.1.6 ACTIVE COMMON BERTHING MECHANISM INTERFACE FUNCTIONS

ACBM shall support the following functions at the interface to PE:

A. Support Structural/Mechanical Attachment

B. Receive Power

C. Supply Data

D. Receive Data

3A.1.1.7 PRESSURIZED ELEMENT INTERFACE FUNCTIONS

PE shall support the following functions at the interface to ACBM:

A. Support Structural/Mechanical Attachment

B. Supply Power

C. Control Power

D. Supply Data

E. Receive Data

3A.1.2 DELETED

3A.1.2.1 RESPONSIBILITY FOR THE ACTIVE COMMON BERTHING MECHANISM

Boeing Defense and Space Group (BD&SG) carries the responsibility for designing the ACBM to the interface requirements herein.

3A.1.2.2 RESPONSIBILITY FOR PRESSURIZED ELEMENT

3A.1.2.2.1 RESPONSIBILITY FOR LABORATORY ELEMENT (USL)

Unless otherwise noted herein, BD&SG carries the responsibility for designing the USL ACBM interface to the requirements imposed on the PE.

3A.1.2.2.2 RESPONSIBILITY FOR HABITATION ELEMENT (HAB)

Unless otherwise noted herein, BD&SG carries the responsibility for designing the Hab ACBM interface to the requirements imposed on the PE.

3A.1.2.2.3 RESPONSIBILITY FOR NODE

Unless otherwise noted herein, BD&SG carries the responsibility for designing the Node ACBM interface to the requirements imposed on the PE.

3A.1.2.2.4 DELETED

3A.1.2.3 RESPONSIBILITY FOR UTILITY CONNECTORS

The PE responsible agency shall be responsible for bulkhead feedthroughs for ACBM utilities. BD&SG shall be responsible for interfacing utility connectors.

3A.2 INTERFACE REQUIREMENTS

3A.2.1 ACTIVE COMMON BERTHING MECHANISM INTERFACE REQUIREMENTS

3A.2.1.1 ENVELOPE REQUIREMENTS

3A.2.1.1.1 ENVELOPE

The ACBM shall not exceed the envelope defined in Figure 3A.2.1.1.1–1, Active Common Berthing Mechanism Envelope.

3A.2.1.1.1.1 STAYOUT ZONE FOR ACBM M/D DEPLOYABLE MECHANISM BELOW X_{CBM} =0 (RADIAL PORT ONLY)

The ACBM Meteroid Debris Deployable Mechanism (683–14599) as installed onto either Node 2 or Node 3 radial ports shall remain within the volume shown in Figure 3A.2.1.1.1.1–1, Radial Port Mechanism Envelope. This stayout zone only defines the volume below the ACBM to PE interfaces (X_{cbm} = 0).

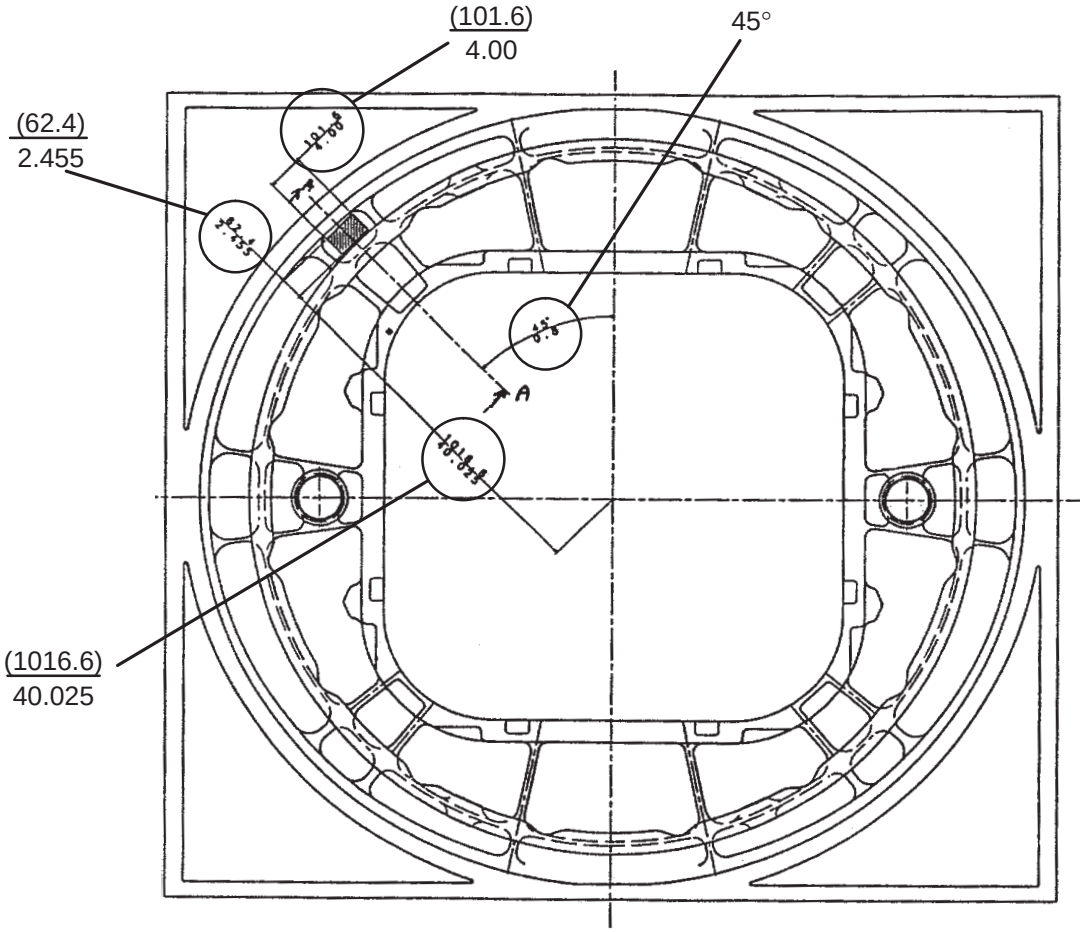

SECTION A–A

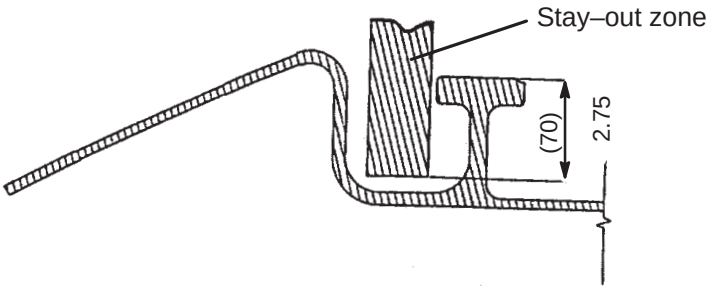

NOTE: Envelope shown in figure is typical for four places.

FIGURE 3A.2.1.1.1.1–1 RADIAL PORT MECHANISM ENVELOPE

3A.2.1.1.2 RESERVED VOLUMES

3A.2.1.1.2.1 ACTIVE COMMON BERTHING MECHANISM HARDWARE

The ACBM hardware mounting and operation shall not interfere with PE hardware.

3A.2.1.2 MASS PROPERTIES

3A.2.1.2.1 CENTER OF MASS

ACBM ring assembly Center of Gravity (CG) is X= 2.5 (63.5), Y= 0.0 and Z= 0.0 ± 0.5 inches (12.7). The motor controller assembly CG is shown in Figure 3A.2.1.2.1–1, Motor Controller Assembly Center of Gravity.

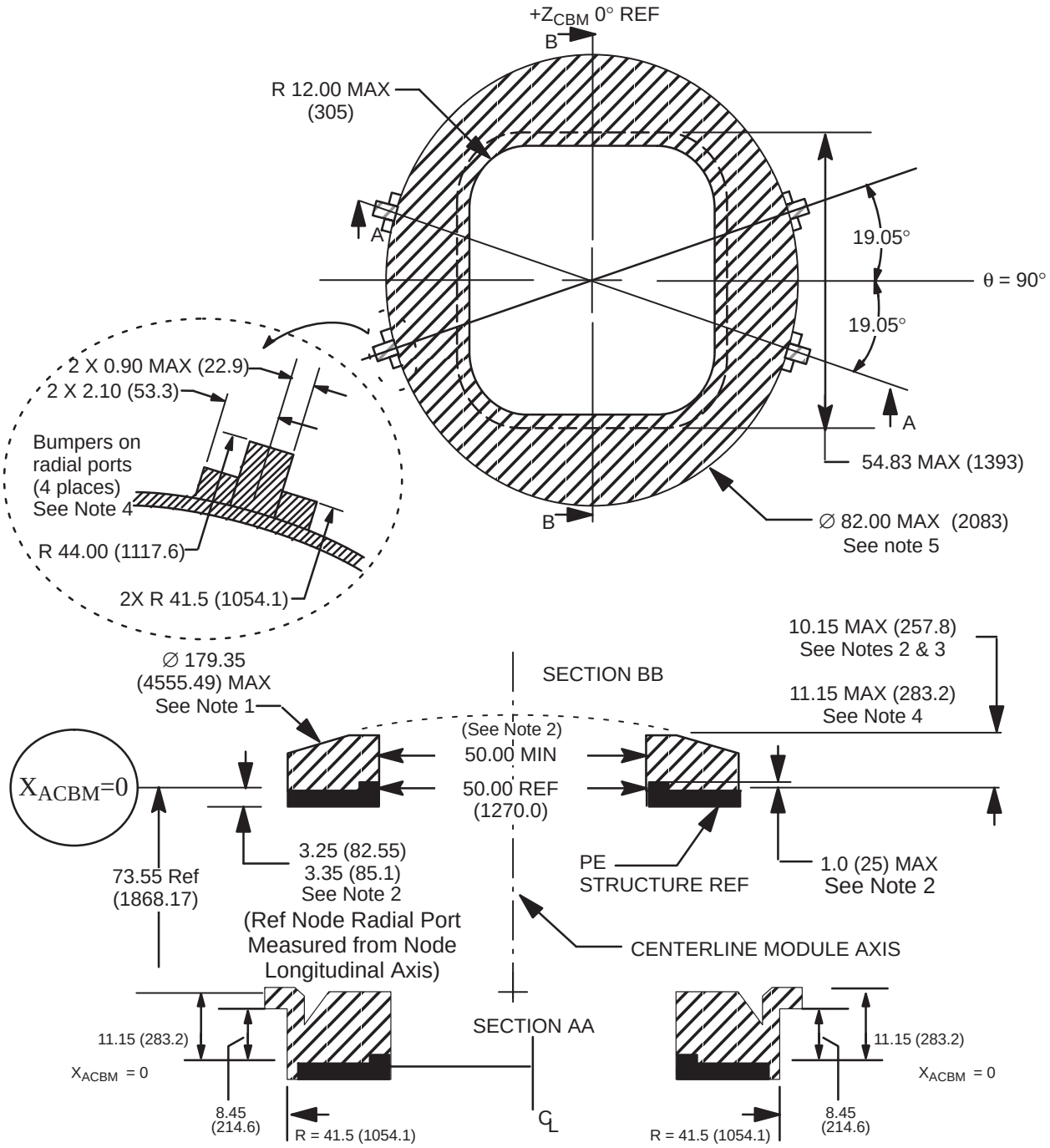

Notes 1: Applicable to ACBM Radial Ports with closed deployable M/D covers. Axial ACBM Ports do not have M/D covers and do not have the diameter limit.
2: Applicable to Axial Port ACBMs.
3: Does not include any MLI covers on Axial Ports.
4: Applicable to Radial Port ACBMs at bumper locations.
5: Above envelope does not include fixes M/D skirts

☐ CLEAR PASSAGE ENVELOPE (On–Orbit Berthed Configuration)

▨ ACBM HARDWARE ENVELOPE

■ ACBM HARDWARE MAY ENCROACH ON THIS AREA PROVIDED THE INTRUSION DOES NOT INTERFERE WITH PE STRUCTURE

FIGURE 3A2.1.1.1–1 ACTIVE COMMON BERTHING MECHANISM ENVELOPE

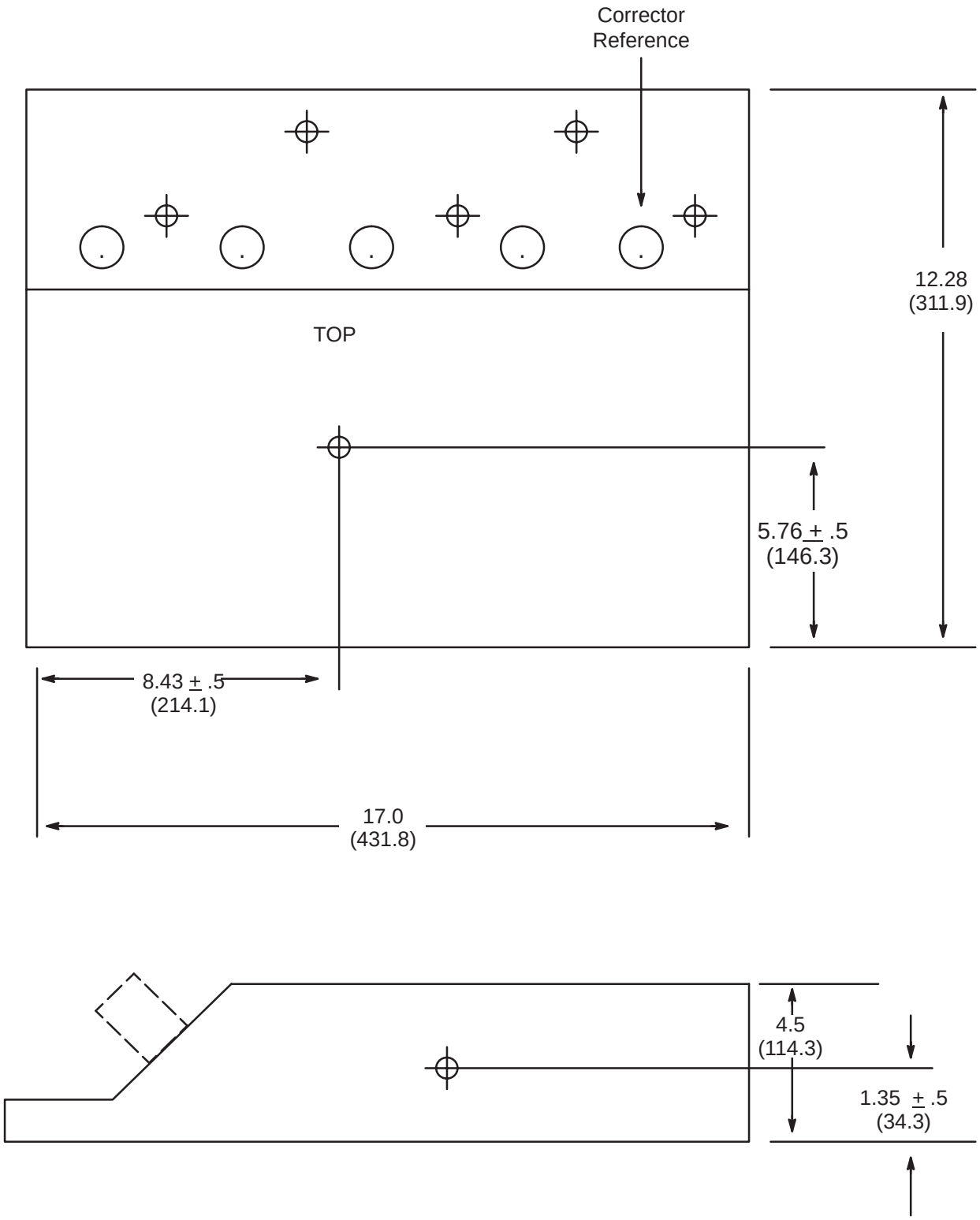

FIGURE 3A.2.1.2.1–1 MOTOR CONTROLLER ASSEMBLY CENTER OF GRAVITY

3A.2.1.2.2 DELETED

3A.2.1.2.3 MASS LIMITATIONS

The ACBM mass shall not exceed 685 lb (311 Kg).

3A.2.1.3 STRUCTURAL/MECHANICAL ATTACHMENT

The ACBM shall supply structural and mechanical provisions for mechanical attachment to the PE.

3A.2.1.3.1 DELETED

3A.2.1.3.2 INTERCONNECTING UTILITY HARDWARE

The ACBM interface design shall incorporate provisions for the mechanical connection of data and power between the ACBM and the PE in accordance with SSP 50005, International Space Station Flight Crew Standard.

3A.2.1.3.2.1 ACCESSIBILITY

The utility interface design shall comply with SSP 50005, requirements for Intra Vehicular Activity (IVA) accessibility.

Interface connections shall be manually mateable with one PE hatch open in the berthed configuration.

3A.2.1.3.2.2 REDUNDANCY

The ACBM shall supply redundant utility interfaces to the PE for data and power.

3A.2.1.3.2.3 ELECTRICAL CONNECTORS

The characteristics for electrical connectors inside the vestibule shall be in accordance with SSQ 21635, General Specifications for Connectors and Accessories, Electrical, Circular, Miniature, IVA/EVA/Robot Compatible, Space Quality.

3A.2.1.3.2.4 UTILITY CABLE SPECIFICATIONS

3A.2.1.3.2.4.1 COMMAND/CONTROL DATA BUS CABLE SPECIFICATIONS

The physical characteristics for MIL–STD–1553 cable shall be in accordance with SSQ 21655, General Specification for Cable, Electrical, MIL–STD–1553B Data Bus, Space Quality.

3A.2.1.3.2.4.2 POWER CABLE SPECIFICATIONS

Secondary power cables shall conform to SSQ 21656, General Specification for Wire and Cable, Electric, Fluoropolymer–insulated, Nickel Coated Copper or Copper Alloy.

3A.2.1.3.3 VESTIBULE CLEARANCES

3A.2.1.3.3.1 UTILITY JUMPER ENVELOPE

The ACBM shall provide an unobstructed area in addition to the clear passage envelope for the installation of utility jumpers between PEs when berthed and outfitted.

3A.2.1.3.4 ATMOSPHERIC CONTAINMENT

The ACBM to PE interface shall not exceed 0.021 sccs leakage air at 14.7 psia (101.4 KPa).

3A.2.1.3.4.1 DELETED

3A.2.1.4 ELECTRICAL INTERFACES

3A.2.1.4.1 CURRENT RATING

The ACBM shall be rated at a minimum of 16.8A for each of two redundant power strings. Each power string shall draw a maximum of 5.0 Amps total from the PE.

3A.2.1.4.1.1 POWER QUALITY

The power quality shall be in accordance with interface C of SSP 30482, Volume II, Electrical Power Specifications and Standards, except the minimum steady state voltage delivered to the CBM is 111.5 Vdc.

3A.2.1.5 ELECTRONIC INTERFACES

3A.2.1.5.1 COMMAND/CONTROL DATA BUS

The ACBM to PE data interface shall be provided on two separate, bi–directional one–failure tolerant paths.

3A.2.1.5.1.1 DATA BUS FORMAT/STANDARD

The ACBM to PE data interface format shall be in accordance with MIL–STD–1553.

3A.2.1.5.1.2 DATA BUS SIGNAL CHARACTERISTICS

The ACBM to PE data interface signal characteristics shall be in accordance with MIL–STD–1553.

3A.2.1.5.1.3 DATA BUS CONNECTIVITY

3A.2.1.5.1.3.1 DATA BUS COUPLING

The ACBM to PE data interface shall be transformer coupled in accordance with MIL–STD–1553.

3A.2.1.5.1.3.2 DATA BUS INTERFACE IMPEDANCES

The ACBM to PE data interface impedance shall be in accordance with MIL–STD–1553.

3A.2.1.5.1.4 TERMINAL OPERATIONS

The ACBM shall respond as a remote terminal to the PE bus controller in accordance with MIL–STD–1553.

3A.2.1.5.1.5 DATA BUS INTERFACE FUNCTIONS

The ACBM shall provide the following terminal capabilities:

A. Message entry on bus transmission failure for both no remote terminal response and status word indication of message error.

B. Support the following MIL–STD–1553 protocol options:
   - B.1. All required and operational states in the MIL–STD–1553 status word.
   - B.2. All MIL–STD–1553 mode codes.
   - B.3. Broadcast commands with and without data words.

3A.2.1.5.1.6 DATA BUS SERVICE AVAILABILITY

The ACBM to PE data interface shall be available to receive commands and provide status prior to and during all berthing/deberthing activity at that port.

3A.2.1.6 SOFTWARE INTERFACES

The ACBM to PE software interfaces shall be in accordance with SSP 41175, Station Management and Control to ISS Software Interface Control Document, for U.S. elements and SSP 41151, SSMB to Japanese Experiment Module Interface Requirements Document Appendix D Software Interfaces, for the JEM.

3A.2.1.7 ENVIRONMENTS

3A.2.1.7.1 ELECTROMAGNETIC EFFECTS

3A.2.1.7.1.1 ELECTROMAGNETIC COMPATIBILITY

The ACBM to PE interface shall meet the requirements of SSP 30243, Space Station Systems Requirements for Electromagnetic Compatibility.

3A.2.1.7.1.2 ELECTROMAGNETIC INTERFERENCE

The ACBM to PE interface shall meet the requirements of SSP 30482, Space Station Electric Power Specifications and Standards Volume 1: EPS Electrical Performance Specifications.

3A.2.1.7.1.3 GROUNDING

The ACBM to PE interface shall meet the requirements of SSP 30240, Space Station Grounding Requirements.

3A.2.1.7.1.4 BONDING

The ACBM to PE structural/mechanical interface shall meet the requirements of SSP 30245, Space Station Electrical Bonding Requirements. The bonding shall meet the requirements for a Class R bond.

3A.2.1.7.1.5 CABLE AND WIRE DESIGN

The ACBM to PE cable and wire interface shall meet the requirements of SSP 30242, Space Station Cable/Wire Design and Control Requirements for Electromagnetic Compatibility

3A.2.1.7.1.6 ELECTROSTATIC DISCHARGE

The ACBM to PE interface shall meet the requirements of SSP 30243.

3A.2.1.7.1.7 CORONA

The ACBM to PE interface shall meet the requirements of SSP 30243.

3A.2.1.7.2 STRUCTURAL LOADS

3A.2.1.7.2.1 BERTHING AND ON ORBIT

The ACBM to PE interface shall survive loads induced on the ACBM as defined in the documents listed in Table 3A.2.1.7.2.1–1, Element to Element ICDs and transformed as depicted in Figure 3A.2.1.7.2.1–1, Load Transformation Diagram without loss of functionality as defined herein.

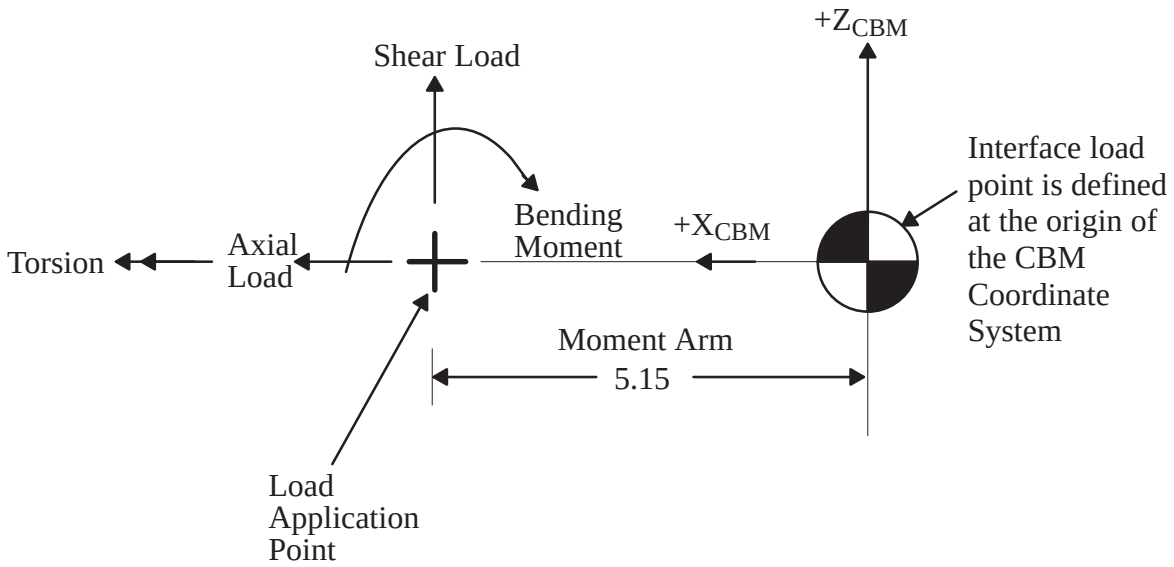

NOTE: Combine loads in all possible combinations.

FIGURE 3A.2.1.7.2.1–1 LOAD TRANSFORMATION DIAGRAM

TABLE 3A.2.1.7.2.1–1 ELEMENT TO ELEMENT ICDS

SSP 41140	Node Element 1 to U.S. Habitation Element ICD
SSP 41141	Node Element 1 to U.S. Laboratory Element ICD
SSP 41142	Node Element 1 to Cupola Element ICD
SSP 41143	Node Element 2 to U.S. Laboratory Element ICD
SSP 41145	Node Element 1 to Airlock Element ICD
SSP 41150	Space Station Manned Base to Columbus Attached Pressurized Module IRD
SSP 42007	United States On–orbit Segment to Mini Pressurized Logistics Module ICD
SSP 42097	Pressurized Mating Adapter to U.S. Pressurized Elements ICD
SSP 42122	Node Element 1 to Pressurized Mating Adapter ICD
SSP 44030	ITS Z1 to Node 1 ICD

3A.2.1.7.2.2 LAUNCH AND LANDING

The ACBM to PE interface shall survive CBM launch and landing loads (one cycle) defined in Table 3A.2.1.7.2.2–1, ACBM Liftoff and Landing Acceleration Environment. ACBM to Node interfaces that are launched with a Pressurized Mating Adapter (PMA) or Cupola attached to the ACBM shall survive the launch and landing loads defined in the documents listed in Table 3A.2.1.7.2.2–2, Element to Element Interface Control Documents For Interfaces Launched Mated.

TABLE 3A.2.1.7.2.2–1 ACBM LIFTOFF AND LANDING ACCELERATION ENVIRONMENT

Liftoff	n_x	g's	+/– 4.3	r_x rad/sec^2 +/–5.8
	n_y	g's	+/– 2.3	r_y rad/sec^2 +/–20.0
	n_z	g's	+/– 8.1	r_z rad/sec^2 +/–3.7
Landing	n_x	g's	+/– 4.1	r_x rad/sec^2 +/–4.4
	n_y	g's	+/– 3.7	r_y rad/sec^2 +/–14.5
	n_z	g's	+/– 6.9	r_z rad/sec^2 +/–11.2

Acclerations act at CG and apply concurrently in all possible combinations for each event. Reference Figure 3A.2.1.7.2.2–1.

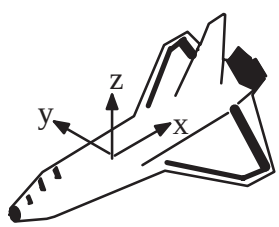

FIGURE 3A.2.1.7.2.2–1

TABLE 3A.2.1.7.2.2–2 ELEMENT TO ELEMENT INTERFACE CONTROL DOCUMENTS FOR INTERFACES LAUNCHED MATED

SSP 41142	Node Element 1 to Cupola Element ICD
SSP 42097	Pressurized Mating Adapter to U.S. Pressurized Elements ICD
SSP 44122	Node Element 1 to Pressurized Docking Module Adapter ICD

3A.2.1.7.3 VIBROACOUSTICS

The ACBM to PE interface shall survive the launch vibroacoustics defined in Table 3A.2.1.7.3–1, Active Common Berthing Mechanism to Pressurized Elements Launch Vibroacoustics for all elements except those launched mated to another PE. ACBM to Node interfaces, which are launched with a PMA or Cupola attached to the ACBM, shall survive the launch vibroacoustics defined in the documents listed in Table 3A.2.1.7.2.2–2 without loss of functionality as defined herein.

TABLE 3A.2.1.7.3–1 ACTIVE COMMON BERTHING MECHANISM TO PRESSURIZED ELEMENTS LAUNCH VIBROACOUSTICS

LOCATION	FREQUENCY	ACCELERATION
Tangential to PE endcone surface	20 Hz 20–80 Hz 80 Hz 80–100 Hz 100–200 Hz 200–2000 Hz 2000 Hz Composite	0.0007 G^2/Hz + 5.0 dB/Oct 0.007 G^2/Hz + 9.32 dB/Oct 0.014 G^2/Hz – 9.0 db/Oct 0.000014 G^2/Hz 1.8 G_{RMS}
Normal to PE Endcone Surface	20 Hz 20–100 Hz 100 Hz 100–125 Hz 125–300 Hz 300–2000 Hz 2000 Hz Composite	0.003 G^2/Hz + 6.0 dB/Oct 0.068 G^2/Hz +9.32 dB/Oct 0.14 G^2/Hz – 9.0 dB/Oct 0.00046 G^2/Hz 7.0 G_{RMS}
Duration	7.5 Secs/Mission	

3A.2.1.8 THERMAL

The ACBM to PE interface shall function as described herein when exposed to the thermal radiation environment per SSP 50023, Thermal Control Plan. SSP 50023 specifies math models and/or thermal design analysis criteria for interface design.

3A.2.1.9 DEPRESSURIZATION

The ACBM to PE interface shall survive a 0.76 psi/sec (5.24 KPa/sec) depressurization rate over the range of 15.2 psia (104.8 KPa) to 5.5E–12 psia (2.7E–10 Torr) without loss of functionality as specified herein.

3A.2.1.10 REPRESSURIZATION

The ACBM to PE interface shall survive a 0.30 psi/sec (2.07 KPa/sec) repressurization rate over the range of 5.5E–12 psia (2.7E–10 Torr) to 15.2 psia (104.8 KPa) without loss of functionality as specified herein.

3A.2.2 PRESSURIZED ELEMENT INTERFACE REQUIREMENTS

3A.2.2.1 ENVELOPE REQUIREMENTS

3A.2.2.1.1 ENVELOPE

PE shall not interfere with ACBM hardware within the envelope defined in Figure 3A.2.1.1.1–1.

3A.2.2.1.2 RESERVED VOLUMES

3A.2.2.1.2.1 ACTIVE COMMON BERTHING MECHANISM HARDWARE

The PE shall not interfere with ACBM hardware mounting or operation.

3A.2.2.2 MASS PROPERTIES

The PE shall accommodate an ACBM with mass properties as defined in paragraph 3A.2.1.2.

3A.2.2.3 STRUCTURAL/MECHANICAL ATTACHMENT

The PE shall supply structural and mechanical provisions for the mechanical attachment of the ACBM.

3A.2.2.3.1 DELETED

3A.2.2.3.2 INTERCONNECTING UTILITY HARDWARE

The PE interface design shall incorporate provisions for the mechanical connection of data and power between the PE and the ACBM in accordance with SSP 50005.

3A.2.2.3.2.1 ACCESSIBILITY

The utility interface design shall comply with SSP 50005 requirements for IVA accessibility.

Interface connections shall be manually mateable with one PE hatch open in the berthed configuration.

3A.2.2.3.2.2 REDUNDANCY

The PE shall supply redundant utility interfaces for ACBM data and power.

3A.2.2.3.2.3 ELECTRICAL CONNECTORS

The characteristics for electrical connectors inside the vestibule shall be in accordance with SSQ 21635.

3A.2.2.3.2.4 UTILITY CABLE SPECIFICATIONS

3A.2.2.3.2.4.1 COMMAND/CONTROL DATA BUS CABLE SPECIFICATIONS

The physical characteristics for MIL–STD–1553 cable shall be in accordance with SSQ 21655.

3A.2.2.3.2.4.2 POWER CABLE SPECIFICATIONS

Secondary power cables shall conform to SSQ 21656.

3A.2.2.3.3 VESTIBULE CLEARANCES

3A.2.2.3.3.1 UTILITY JUMPER ENVELOPE

The PE utility jumpers within the vestibule shall be routed within the unobstructed area provided by the ACBM.

3A.2.2.3.4 ATMOSPHERIC CONTAINMENT

The PE to ACBM interface shall not exceed 0.021 sccs leakage air at 14.7 psi (101.4 KPa).

3A.2.2.4 ELECTRICAL INTERFACES

3A.2.2.4.1 SUPPLY POWER

PE shall supply a maximum of 16.8 A per each of two redundant power strings. Each power string shall be rated at a minimum of 5.0 Amps total to the ACBM.

The Japanese Experiment Module (JEM) shall supply a minimum of 5.0 Amps per each of the two redundant power strings.

3A.2.2.4.1.1 POWER QUALITY

The power quality shall be in accordance with interface C of SSP 30482, Volume I, Electrical Power Specifications and Standards, except the minimum steady state voltage delivered to the CBM is 111.5 Vdc.

3A.2.2.4.1.2 POWER CONTROL

3A.2.2.4.1.2.1 OVER–VOLTAGE/OVER–CURRENT PROTECTION

The PE shall provide over–voltage/over–current protection for the ACBM power.

3A.2.2.5 ELECTRONIC INTERFACES

3A.2.2.5.1 COMMAND/CONTROL DATA BUS

The PE to ACBM data interface shall be provided on two separate, bi–directional, one–failure tolerant paths.

3A.2.2.5.1.1 DATA BUS FORMAT/STANDARD

The PE to ACBM data interface format shall be in accordance with MIL–STD–1553.

3A.2.2.5.1.2 DATA BUS SIGNAL CHARACTERISTICS

The PE to ACBM data interface signal characteristics shall be in accordance with MIL–STD–1553.

3A.2.2.5.1.3 DATA BUS CONNECTIVITY

3A.2.2.5.1.3.1 DATA BUS COUPLING

The PE to ACBM data interface shall be transformer coupled in accordance with MIL–STD–1553.

3A.2.2.5.1.3.2 DATA BUS INTERFACE IMPEDANCES

The PE to ACBM data interface impedance shall be in accordance with MIL–STD–1553.

3A.2.2.5.1.4 TERMINAL OPERATIONS

The PE shall be the MIL–STD–1553 bus controller for the PE to ACBM data bus interface.

3A.2.2.5.1.5 DATA BUS INTERFACE FUNCTIONS

The PE shall support the following terminal capabilities from the ACBM:

A. Message entry on bus transmission failure for both no remote terminal response and status word indication of message error.

B. Support the following MIL–STD–1553 protocol options:
   - B.1. All required and operational states in the MIL–STD–1553 status word.
   - B.2. All MIL–STD–1553 mode codes.
   - B.3. Broadcast commands with and without data words.

3A.2.2.5.1.6 DATA BUS SERVICE AVAILABILITY

The PE to ACBM data interface shall be available to send commands and receive status prior to and during all berthing/deberthing activity at that port.

3A.2.2.6 SOFTWARE INTERFACES

The PE to ACBM interfaces are defined in SSP 41175 Book 2, Station Management and Control to ISS Software Interface Control Document, SSP 41178 Book 27 for U.S. Elements and Node 2, and SSP 41151 Appendix D, for the JEM.

3A.2.2.7 ENVIRONMENTS

3A.2.2.7.1 ELECTROMAGNETIC EFFECTS

3A.2.2.7.1.1 ELECTROMAGNETIC COMPATIBILITY

The PE to ACBM interface shall meet the requirements of SSP 30243.

3A.2.2.7.1.2 ELECTROMAGNETIC INTERFERENCE

The PE to ACBM interface shall meet the requirements of SSP 30482, Space Station Electric Power Specifications and Standards Volume 1: EPS Electrical Performance Specifications.

3A.2.2.7.1.3 GROUNDING

The PE to ACBM interface shall meet the requirements of SSP 30240.

3A.2.2.7.1.4 BONDING

The PE to ACBM structural/mechanical interface shall meet the requirements of SSP 30245. The bonding shall meet the requirements for a Class R bond.

3A.2.2.7.1.5 CABLE AND WIRE DESIGN

The PE to ACBM cable and wire interface shall meet the requirements of SSP 30242.

3A.2.2.7.1.6 ELECTROSTATIC DISCHARGE

The PE to ACBM interface shall meet the requirements of SSP 30243.

3A.2.2.7.1.7 CORONA

The PE to ACBM interface shall meet the requirements of SSP 30243.

3A.2.2.7.2 STRUCTURAL LOADS

3A.2.2.7.2.1 BERTHING AND ON ORBIT

The PE to ACBM interface shall survive loads induced on the ACBM as defined in the documents listed in Table 3A.2.1.7.2.1–1 and transformed as depicted in Figure 3A.2.1.7.2.1–1 without loss of functionality as defined herein.

3A.2.2.7.2.2 LAUNCH AND LANDING

The PE to ACBM interface shall survive launch and landing loads defined in Table 3A.2.1.7.2.2–1. Node to ACBM interfaces that are launched with a PMA or Cupola attached to the ACBM shall survive the launch and landing loads defined in the documents listed in Table 3A.2.1.7.2.2–2.

3A.2.2.7.3 VIBROACOUSTICS

The PE to ACBM interface shall survive the launch vibroacoustics defined in Table 3A.2.1.7.3–1 for all elements, except those launched mated to another PE. Node to ACBM interfaces, which are launched with a PMA or Cupola attached to the ACBM, shall survive the launch vibroacoustics defined in the documents listed in Table 3A.2.1.7.2.2–2 without loss of functionality as defined herein.

3A.2.2.8 THERMAL

The PE to ACBM interface shall function as described herein when exposed to the thermal radiation environment per SSP 50023. SSP 50023 specifies math models and/or thermal design analysis criteria for interface design.

3A.2.2.9 DEPRESSURIZATION

The PE to ACBM interface shall survive a 0.76 psi/sec (5.24 KPa/sec) depressurization rate over the range of 15.2 psia (104.8 KPa) to 5.5E–12 psia (2.7E–10 Torr) without loss of functionality as specified herein.

3A.2.2.10 REPRESSURIZATION

The PE to ACBM interface shall survive a 0.30 psi/sec (2.07 KPa/sec) repressurization rate over the range of 5.5E–12 psia (2.7E–10 Torr) to 15.2 psia (104.8 KPa) without loss of functionality as specified herein.

3B.0 PASSIVE COMMON BERTHING MECHANISM TO PRESSURIZED ELEMENT INTERFACES

3B.1 GENERAL

This section defines the functional interface requirements between the PCBM and the PEs.

3B.1.1 INTERFACE DESCRIPTION

The PCBM to PE interface consists of a structural/mechanical interface only.

3B.1.1.1 PASSIVE COMMON BERTHING MECHANISM DESCRIPTION

The PCBM is a device that serves as part of a common PE to PE interface. The PCBM contains the passive components necessary to accomplish the PE to PE berthing operation.

3B.1.1.2 PRESSURIZED ELEMENT DESCRIPTION

The PE is any element that utilizes the PCBM for on–orbit berthing to another element.

3B.1.1.3 INTERFACE PLANE DESCRIPTION

The PCBM to PE structural/mechanical interface plane lies at the PE bulkhead flange, which is defined at the X_{PCBM}=0 plane.

3B.1.1.4 COORDINATE SYSTEM

The PCBM coordinate system is shown in Figure 3B.1.1.4–1, Passive Common Berthing Mechanism Coordinate System.

3B.1.1.5 ENGINEERING UNITS AND TOLERANCES

Dimensions in this document are shown in the English (inch, pound, second) system of units followed by the equivalent SI (metric) value in parenthesis. Measurements may be verified in either system of units.

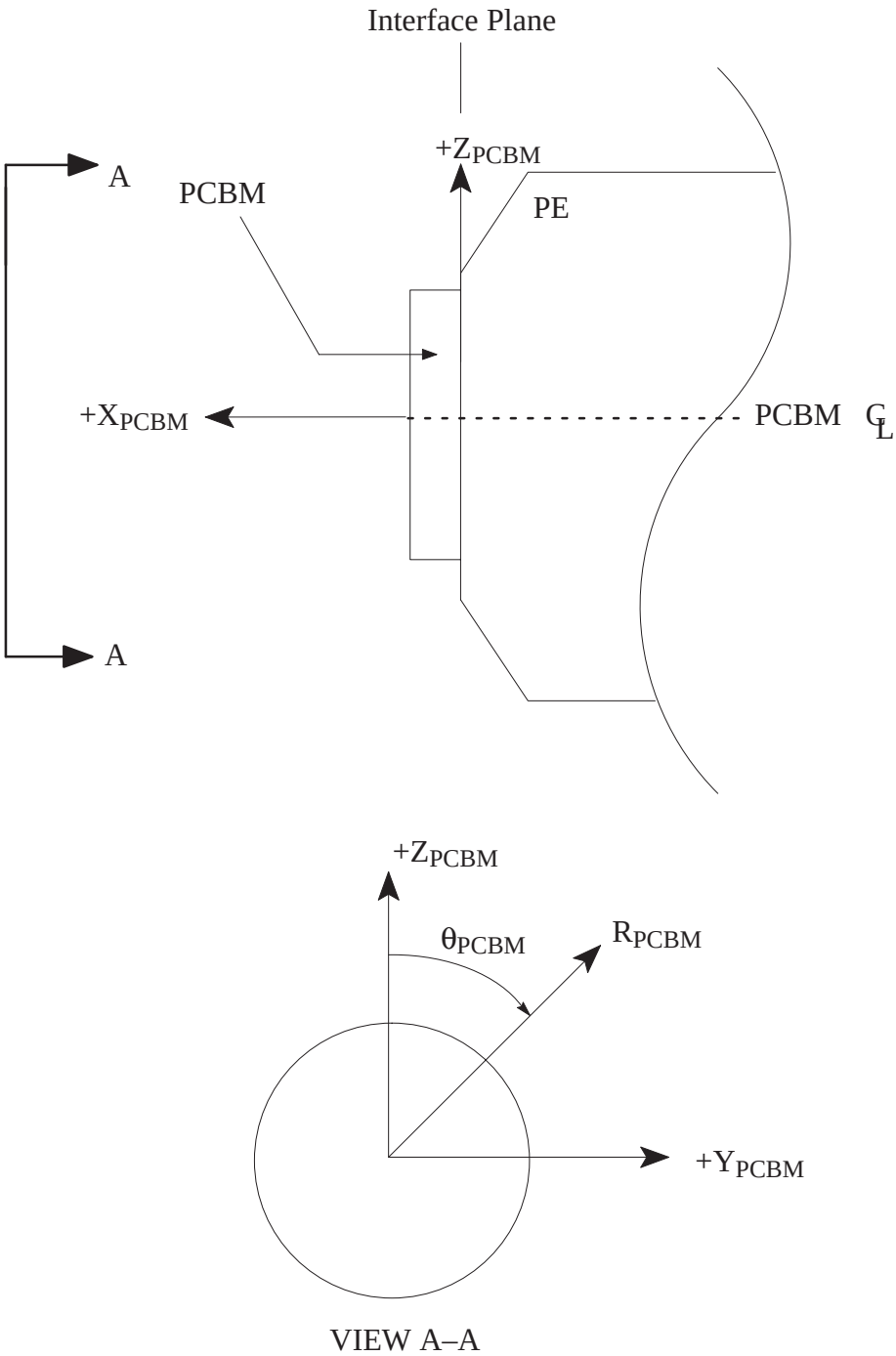

NOTE: R_{PCBM} and θ_{PCBM} define a radial coordinate system.

FIGURE 3B.1.1.4–1 PASSIVE COMMON BERTHING MECHANISM COORDINATE SYSTEM

3B.1.1.5.1 TOLERANCE

Linear tolerances on English dimensions are as indicated in Table 3A.1.1.5.1–1. Linear tolerances on metric dimensions are derived from English measurements and tolerances as defined in ASTM E380, Section 4.5. Angular tolerances are ±0.1 degrees on all angles unless otherwise stated.

3B.1.1.6 PASSIVE COMMON BERTHING MECHANISM INTERFACE FUNCTIONS

The PCBM shall support structural/mechanical attachment at the interface to PE.

3B.1.1.7 PRESSURIZED ELEMENT INTERFACE FUNCTIONS

The PE shall support structural/mechanical attachment at the interface to PCBM.

3B.1.2 DELETED

3B.1.2.1 RESPONSIBILITY FOR THE PASSIVE COMMON BERTHING MECHANISM

BD&SG carries the responsibility for designing the PCBM to the interface requirements herein.

3B.1.2.2 RESPONSIBILITY FOR PRESSURIZED ELEMENT

3B.1.2.2.1 RESPONSIBILITY FOR LABORATORY ELEMENT

Unless otherwise noted herein, BD&SG carries the responsibility for designing the USL to PCBM interface to the requirements imposed on the PE.

3B.1.2.2.1.1 RESPONSIBILITY FOR HABITATION ELEMENT

Unless otherwise noted herein, BD&SG carries the responsibility for designing the Hab to PCBM interface to the requirements imposed on the PE.

3B.1.2.2.1.2 RESPONSIBILITY FOR NODE

Unless otherwise noted herein, BD&SG carries the responsibility for designing the Node to PCBM interface to the requirements imposed on the PE.

3B.1.2.2.1.3 RESPONSIBILITY FOR CUPOLA

Unless otherwise noted herein, BD&SG carries the responsibility for designing the Cupola to PCBM interface to the requirements imposed on the PE.

3B.1.2.2.1.4 DELETED

3B.1.2.2.1.5 DELETED

3B.1.2.2.1.6 RESPONSIBILITY FOR PRESSURIZED MATING ADAPTER

Unless otherwise noted herein, McDonnell Douglas Aerospace (MDA) carries the responsibility for designing the PMA to PCBM interface to the requirements imposed on the PE.

3B.1.2.2.1.7 DELETED

3B.1.2.2.1.8 RESPONSIBILITY FOR Z1 INTEGRATED TRUSS SEGMENT (Z1)

Unless otherwise noted herein, Rocketdyne carries the responsibility for designing the Z1 to PCBM interface to the requirements imposed on the PE.

3B.2 INTERFACE REQUIREMENTS

3B.2.1 PASSIVE COMMON BERTHING MECHANISM INTERFACE REQUIREMENTS

3B.2.1.1 ENVELOPE REQUIREMENTS

3B.2.1.1.1 ENVELOPE

The PCBM shall not exceed the envelope defined in Figure 3B.2.1.1.1–1, Passive Common Berthing Mechanism Envelope.

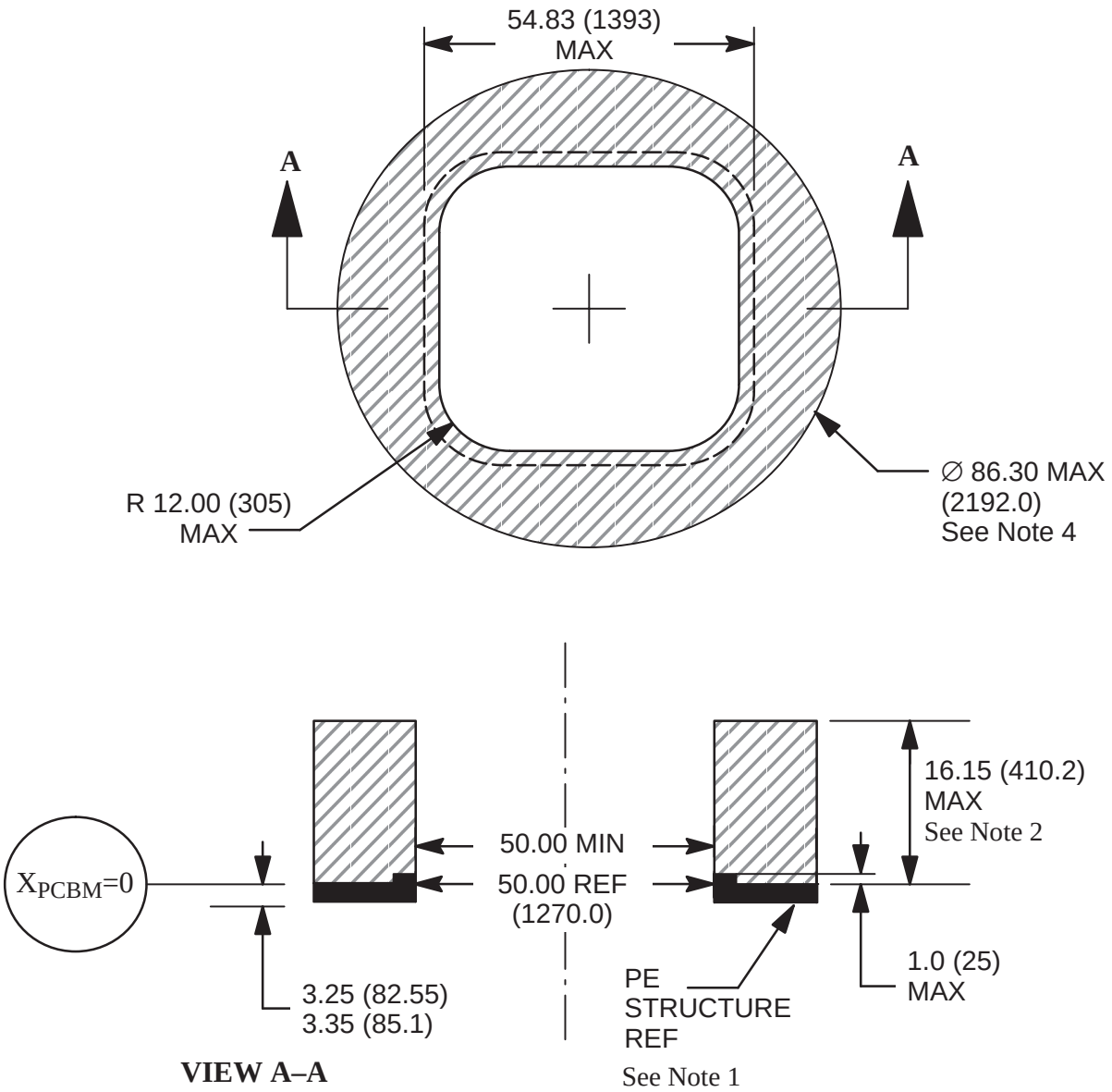

CLEAR PASSAGE ENVELOPE (See Note 3)

PCBM HARDWARE ENVELOPE

Note 1: PE Structure reference does not apply to the Cupola, PMAs or Z1.
Note 2: Does not include any MLI and MDPS covers.
Note 3: Applies to the on–orbit berthed configuration with closeout panel and does not apply to the Z1 truss.
Note 4: Maximum diameter associated with M/D skirt hardware (not applicable to PMA PCBMs).

FIGURE 3B.2.1.1.1–1 PASSIVE COMMON BERTHING MECHANISM ENVELOPE

3B.2.1.1.2 RESERVED VOLUMES

3B.2.1.1.2.1 PASSIVE COMMON BERTHING MECHANISM HARDWARE

The PCBM hardware mounting and operation shall not interfere with any PE hardware.

3B.2.1.2 MASS PROPERTIES

3B.2.1.2.1 CENTER OF MASS

The PCBM ring assembly CG is X= 7.75 (196.85), Y= 0.0, and Z= 0.0 ± 0.5 inches (12.7).

3B.2.1.2.2 DELETED

3B.2.1.2.3 MASS LIMITATIONS

The PCBM mass shall not exceed 390 lb (177 Kg).

3B.2.1.2.4 MASS LIMITATIONS FOR NODE 1, PMA1, AND PMA 2

The PCBM mass shall not exceed 440 lb (200 Kg).

3B.2.1.3 STRUCTURAL/MECHANICAL ATTACHMENT

The PCBM shall supply structural and mechanical provisions for mechanical attachment to the PE.

3B.2.1.3.1 DELETED

3B.2.1.3.2 DELETED

3B.2.1.3.3 VESTIBULE CLEARANCES

3B.2.1.3.3.1 UTILITY JUMPER ENVELOPE

The PCBM shall provide an unobstructed area in addition to the clear passage envelope for the installation of utility jumpers between PEs when fully berthed and outfitted.

3B.2.1.3.4 ATMOSPHERIC CONTAINMENT

The PCBM to PE interface shall not exceed 0.021 sccs leakage air at 14.7 psia (101.4 KPa).

3B.2.1.4 ENVIRONMENTS

3B.2.1.4.1 ELECTROMAGNETIC EFFECTS

3B.2.1.4.1.1 GROUNDING

The PCBM to PE interface shall meet the requirements of SSP 30240.

3B.2.1.4.1.2 BONDING

The PCBM to PE structural/mechanical interface shall meet the requirements of SSP 30245. The bonding shall meet the requirements for a Class R bond.

3B.2.1.4.2 STRUCTURAL LOADS

3B.2.1.4.2.1 BERTHING AND ON ORBIT

The PCBM to PE interface shall survive loads induced on the PCBM as defined in the documents listed in Table 3A.2.1.7.2.1–1 and transformed as depicted in Figure 3B.2.1.4.2.1–1, Load Transformation Diagram for all elements except the JEM without loss of functionality as defined herein. The PCBM to JEM interface shall survive loads as defined in SSP 41151, Space Station Manned Base to Japanese Experiment Module IRD, without loss of functionality as defined herein.

3B.2.1.4.2.2 LAUNCH AND LANDING

The PCBM to PE interface shall survive CBM launch and landing loads (25 cycles) defined in Table 3B.2.1.4.2.2–1, PCBM Liftoff and Landing Acceleration Environment. PCBM to PE interfaces that are launched with PCBM attached to an ACBM or MBM, shall survive the launch and landing loads defined in the documents listed in Table 3A.2.1.7.2.2–2.

3B.2.1.4.3 VIBROACOUSTICS

The PCBM to PE interface shall survive the launch vibroacoustics defined in Table 3B.2.1.4.3–1, Passive Common Berthing Mechanism to Pressurized Elements Launch Vibroacoustics, for all elements except those launched mated to another PE. PCBM to PE interfaces, which are launched with the PCBM attached to an ACBM, shall survive the launch vibroacoustics defined in the documents listed in Table 3A.2.1.7.2.2–2 without loss of functionality as defined herein.

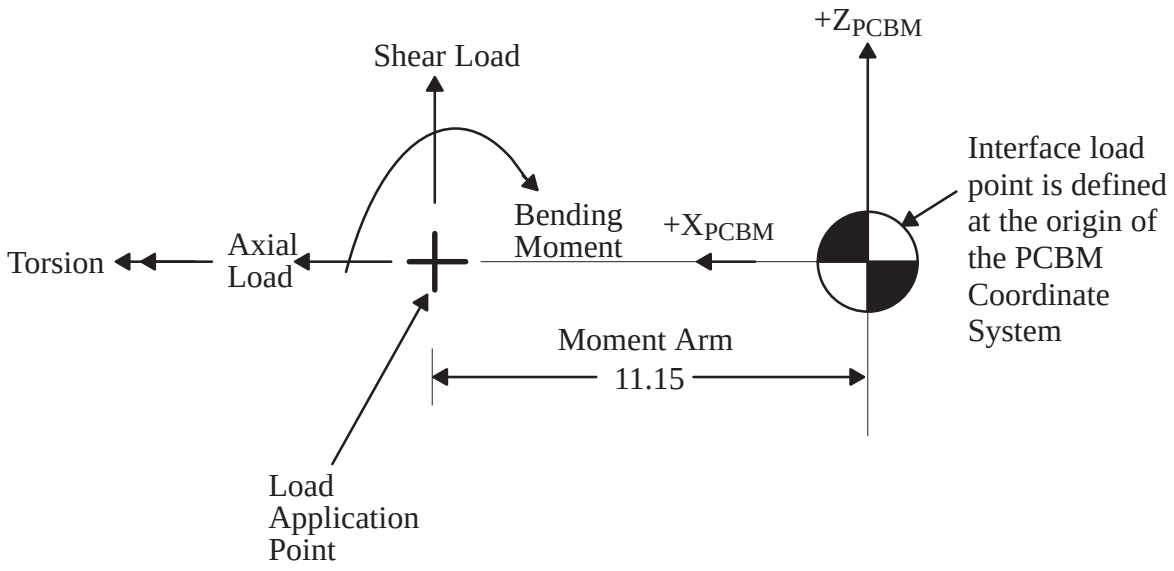

NOTE: Combine loads in all possible combinations.

FIGURE 3B.2.1.4.2.1–1 LOAD TRANSFORMATION DIAGRAM

TABLE 3B.2.1.4.2.2–1 PCBM LIFTOFF AND LANDING ACCELERATION ENVIRONMENT

Liftoff	n_x	g's	+/– 4.3	r_x rad/sec^2 +/–5.8
	n_y	g's	+/– 2.3	r_y rad/sec^2 +/–20.0
	n_z	g's	+/– 8.1	r_z rad/sec^2 +/–3.7
Landing	n_x	g's	+/– 4.1	r_x rad/sec^2 +/–4.4
	n_y	g's	+/– 3.7	r_y rad/sec^2 +/–14.5
	n_z	g's	+/– 6.9	r_z rad/sec^2 +/–11.2

Accelerations act at CBM CG and apply concurrently in all possible combinations for each event. See Figure 3A.2.1.7.2.2–1

TABLE 3B.2.1.4.3–1 PASSIVE COMMON BERTHING MECHANISM TO PRESSURIZED ELEMENTS LAUNCH VIBROACOUSTICS

LOCATION	FREQUENCY	ACCELERATION
Tangential to PE endcone surface	20 Hz 20–80 Hz 80 Hz 80–100 Hz 100–200 Hz 200–2000 Hz 2000 Hz Composite	0.0012 G^2/Hz + 5.0 dB/Oct 0.012 G^2/Hz +9.32 dB/Oct 0.025 G^2/Hz – 9.0 dB/Oct 0.00003 g^2/Hz 2.4 G_{RMS}
Normal to PE Endcone Surface	20 Hz 20–100 Hz 100 Hz 100–125 Hz 125–300 Hz 300–2000 Hz 2000 Hz Composite	0.005 G^2/Hz + 6.0 dB/Oct 0.12 G^2/Hz +9.32 dB/Oct 0.25 G^2/Hz –9.0 dB/Oct 0.00083 G^2/Hz 9.4 G_{RMS}
Duration	7.5 Secs/Mission	

3B.2.1.5 THERMAL

The PCBM to PE interface shall function as described herein when exposed to the thermal radiation environment per SSP 50023. SSP 50023 specifies math models and/or thermal design analysis criteria for interface design.

3B.2.1.6 DEPRESSURIZATION

The PCBM to PE interface shall survive a 0.76 psi/sec (5.24 KPa/sec) depressurization rate over the range of 15.2 psia (104.8 KPa) to 5.5E–12 psia (2.7E–10 Torr) without loss of functionality as specified herein.

3B.2.1.7 REPRESSURIZATION

The PCBM to PE interface shall survive a 0.30 psi/sec (2.07 KPa/sec) repressurization rate over the range of 5.5E–12 psia (2.7E–10 Torr) to 15.2 psia (104.8 KPa) without loss of functionality as specified herein.

3B.2.2 PRESSURIZED ELEMENT INTERFACE REQUIREMENTS

3B.2.2.1 ENVELOPE REQUIREMENTS

3B.2.2.1.1 ENVELOPE

The PE shall not interfere with PCBM hardware within the envelope defined in Figure 3B.2.1.1.1–1.

3B.2.2.1.2 RESERVED VOLUMES

3B.2.2.1.3 PASSIVE COMMON BERTHING MECHANISM HARDWARE

The PE shall not interfere with PCBM hardware mounting or operation.

3B.2.2.2 MASS PROPERTIES

The PE shall accommodate a PCBM with mass properties as defined in paragraph 3B.2.1.2.

3B.2.2.3 STRUCTURAL/MECHANICAL ATTACHMENT

The PE shall supply structural and mechanical provisions for the mechanical attachment of the PCBM.

3B.2.2.3.1 DELETED

3B.2.2.3.2 DELETED

3B.2.2.3.3 VESTIBULE CLEARANCES

3B.2.2.3.3.1 UTILITY JUMPER ENVELOPE

The PE utility jumpers within the vestibule shall be routed within the unobstructed area provided by the PCBM.

3B.2.2.3.4 ATMOSPHERIC CONTAINMENT

The PE to PCBM interface shall not exceed 0.021 sccs leakage air at 14.7 psia (101.4 KPa).

3B.2.2.4 ENVIRONMENTS

3B.2.2.4.1 ELECTROMAGNETIC EFFECTS

3B.2.2.4.1.1 GROUNDING

The PE to PCBM interface shall meet the requirements of SSP 30240.

3B.2.2.4.1.2 BONDING

The PE to PCBM structural/mechanical interface shall meet the requirements of SSP 30245. The bonding shall meet the requirements for a Class R bond.

3B.2.2.4.2 STRUCTURAL LOADS

3B.2.2.4.2.1 BERTHING AND ON ORBIT

The PE to PCBM interface shall survive loads induced on the PCBM as defined in the documents listed in Table 3A.2.1.7.2.1–1 and transformed as depicted in Figure 3B.2.1.4.2.1–1 for all elements except the JEM without loss of functionality as defined herein. The JEM to PCBM interface shall survive loads as defined in SSP 41151 without loss of functionality as defined herein.

3B.2.2.4.2.2 LAUNCH AND LANDING

The PCBM to PE interface shall survive launch and landing loads defined in Table 3B.2.1.4.2.2–1. PE to PCBM interfaces that are launched with the PCBM attached to an ACBM shall survive the launch and landing loads defined in the documents listed in Table 3A.2.1.7.2.2–2.

3B.2.2.4.3 VIBROACOUSTICS

The PE to PCBM interface shall survive the launch vibroacoustics defined in Table 3B.2.1.4.3–1 for all elements except those launched mated to another PE. PCBM to PE interfaces, which are launched with the PCBM attached to an ACBM, shall survive the launch vibroacoustics defined in the documents listed in Table 3A.2.1.7.2.2–2 without loss of functionality as defined herein.

3B.2.2.5 THERMAL

The PE to PCBM interface shall function as described herein when exposed to the thermal radiation environment per SSP 50023. SSP 50023 specifies math models and/or thermal design analysis criteria for interface design.

3B.2.2.6 DEPRESSURIZATION

The PE to PCBM interface shall survive a 0.76 psi/sec (5.24 KPa/sec) depressurization rate over the range of 15.2 psia (104.8 KPa) to 5.5E–12 psia (2.7E–10 Torr) without loss of functionality as specified herein.

3B.2.2.7 REPRESSURIZATION

The PE to PCBM interface shall survive a 0.30 psi/sec (2.07 KPa/sec) repressurization rate over the range of 5.5E–12 psia (2.7E–10 Torr) to 15.2 psia (104.8 KPa) without loss of functionality as specified herein.

APPENDIX A ABBREVIATIONS AND ACRONYMS

A	Amps
ACBM	Active Common Berthing Mechanism
ASI	Agenzia Spaziale Italiana
BD&SG	Boeing Defense and Space Group
CBM	Common Berthing Mechanism
CG	Center of Gravity
EPS	Electrical Power System
ESA	European Space Agency
EVA	Extra–Vehicular Activity
g_{RMS}	Gravitational force (Root Mean Square)
Hab	Habitation Element
Hz	Hertz
ICD	Interface Control Document
ISS	International Space Station
IVA	Intra Vehicular Activity
JEM	Japanese Experiment Module
Kg	Kilogram
KPa	Kilo Pascal
lb	Pound
MAX	Maximum
M/D	Meteoroid/Debris
MDA	McDonnell Douglas Aerospace
MDPS	Meteoroids and Debris Protective Shield
MIN	Minimum
MLI	Mulit–Layer Insulation

NASA	National Aeronautics and Space Administration
NASDA	The National Space Development Agency of Japan
Oct	Octave
PCBM	Passive Common Berthing Mechanism
PE	Pressurized Element
PMA	Pressurized Mating Adapter
psia	Pounds per Square Inch Absolute
sccs	Standard Cubic Centimeters per Square Inch
sec	Second
SI	International System of Units
SSCB	Space Station Change Board
TBD	To Be Determined
USL	United States Laboratory
Vdc	Volts, direct current

APPENDIX B INDEX OF TBDS/TBRS/TBCS

TBD #s	Page #	Paragraph/ Figure/Table	Title	Status
1	3–5	3A.2.1.2.1	Center of Mass	Closed – 41004–NA–0011B
2	3–8	3A.2.1.2.2	Moments of Inertia	Closed – 41004–NA–0011B
3	3–8	3A.2.1.3.1	Alignment	Closed – 41004–NA–0003A
4	3–10	3A.2.1.6	Software Interface	Closed – 41004–NA–0002
5	3–13	3A.2.1.7.2.2	Launch and Landing	Closed – PIRN NA–0009D
6	3–15	3A.2.1.8	Thermal	Closed – 41004–NA–0010A
7	3–16	3A.2.2.3.1	Alignment	Closed – 41004–NA–0003A
8	3–19	3A.2.2.6	Software Interfaces	Closed – 41004–NA–0002
9	3–20	3A.2.2.8	Thermal	Closed – 41004–NA–0010A
10	3–26	3B.2.1.2.1	Center of Mass	Closed – 41004–NA–0011B
11	3–26	3B.2.1.2.2	Moments of Inertia	Closed – 41004–NA–0011B
12 & 13	3–26	3B.2.1.3.1	Stiffness at the Interface Plane	Closed – 41004–NA–0012
14	3–26	3B.2.1.3.2	Alignment	Closed – 41004–NA–0003A
15	3–27	3B.2.1.4.2.2	Launch and Landing	Closed – PIRN NA–0009D
16	3–30	3B.2.1.5	Thermal	Closed – 41004–NA–0010A
17 & 18	3–31	3B.2.2.3.1	Stiffness at the Interface Plane	Closed – 41004–NA–0012
19	3–31	3B.2.2.3.2	Alignment	Closed – 41004–NA–0003A
20	3–32	3B.2.2.5	Thermal	Closed – 41004–NA–0010A

This Page Intentionally Left Blank