BOEING

PG-3
International Space Station Program

D683-85130-9

Common Berthing Mechanism Powered Bolt Nut Assembly Acceptance Test Procedure Revision J

ALL STEPS CONTAINED WITHIN THIS DOCUMENT ARE CATEGORY C

INTERNATIONAL SPACE STATION

December 14, 2007

FOR INTERNAL PG-3 USE ONLY
CONTRACT NUMBER NAS15-10000

EAR 99. This document contains data within the purview of the U.S. Export Administration Regulations (EAR), 15 CFR 730-774, and is export controlled. The document may be used only in the International Space Station (ISS) program to fulfill responsibilities of the Parties or of a Cooperating Agency of an ISS Partner in furtherance of the ISS Intergovernmental Agreement. Re-transfer or disclosure to, or use by, any persons other than citizens of ISS Program International Partner countries, or use for any other purpose, requires prior U.S. Government authorization.

COMMON BERTHING MECHANISM
POWERED BOLT NUT ASSEMBLY
ACCEPTANCE TEST PROCEDURE
REVISION J
(D683–85130-9)

DECEMBER 14, 2007

Boeing Defense & Space Group
Missiles & Space Division
(a division of The Boeing Company)
Huntsville, Alabama

	Signature	Orgn	Date
PREPARED BY:	Kevin MacQuinn	AV-AD6T	07/12/13
CHECKED BY:	Phillip Pettie	AV-AD6T	07/12/13
ENGINEER:	Kevin MacQuinn	AV-AD6T	07/12/13
TEST:	Mike Hollingsworth	AV-AD6T	07/12/13
QA:	Joseph Kennedy	AV-A3QT	07/12/13
SAFETY:	Carolyn Alkire	AV-A2AT	07/12/13
DQA:	Bobby Gant	AV-AD6T	07/12/13

ABSTRACT

This document contains the detailed test procedures for the conduct of the Common Berthing Mechanism (CBM) Powered Bolt Nut (PBN) Assembly Acceptance Tests in support of the Space Station Program (SSP).

These tests will verify the functional integrity of the PBN components of the CBM following the manufacturing process. The CBM PBN Assembly Acceptance Tests will be conducted at Marshall Space Flight Center (MSFC), Huntsville, Alabama, in Building 4619, or an equivalent test area. Test setup, instrumentation, safety requirements and step by step sequence of test conduct are included.

KEYWORDS

Common Berthing Mechanism

Components

Detailed Test Procedure

Powered Bolt

Powered Bolt Nut

Space Station Program

DOC NO. D683-85130-9

DOCUMENT RELEASE RECORD (DRR)

RELEASES (& DATES)	Update this document by:			AUTHORIZATIONS (& REMARKS)
	ACTIVE PAGES	PAGES ADDED	PAGES DELETED	
Original Release 3/24/1996	i-x 1-1 thru 1*8 2-1 thru 2-2 3-1 thru 3-2 4-1 thru 4-8 5-1 thru 5-20 6-1 thru 6-14 Ai thru Aii A-1 thru A-4 Bi thru Bii B-1 thru B-8 Ci thru Cii C-1 thru C-4 Di thru Dii D-1 thru D-14			This document is released in accordance with PRR PG3-1293.
Revision A 6/5/96	i-x 1-1 thru 1*8 2-1 thru 2-2 3-1 thru 3-2 4-1 thru 4-8 5-1 thru 5-20 6-1 thru 6-14 Ai thru Aii A-1 thru A-4 Bi thru Bii B-1 thru B-8 Ci thru Cii C-1 thru C-4 Di thru Dii D-1 thru D-14			This document is released in accordance with PRR PG3-1293.
Revision B 07/09/96	i-x 1-1 thru 1*8 2-1 thru 2-2 3-1 thru 3-2 4-1 thru 4-8 5-1 thru 5-20 6-1 thru 6-14 Ai thru Aii A-1 thru A-4 Bi thru Bii B-1 thru B-8 Ci thru Cii C-1 thru C-4 Di thru Dii D-1 thru D-14			This document is released in accordance with PRR PG3-1293.

DOC NO. D683-85130-9

DOCUMENT RELEASE RECORD (DRR)

RELEASES (& DATES)	Update this document by:			AUTHORIZATIONS (& REMARKS)
	ACTIVE PAGES	PAGES ADDED	PAGES DELETED	
Revision C 08/14/96	i-x 1-1 thru 1*8 2-1 thru 2-2 3-1 thru 3-2 4-1 thru 4-8 5-1 thru 5-24 6-1 thru 6-14 Ai thru Aii A-1 thru A-4 Bi thru Bii B-1 thru B-8 Ci thru Cii C-1 thru C-4 Di thru Dii D-1 thru D-16	5-15 thru 5-18 D-6 D-16		This document is released in accordance with PRR PG3-1293.
Revision D 12/19/96	i-x 1-1 thru 1*8 2-1 thru 2-2 3-1 thru 3-2 4-1 thru 4-8 5-1 thru 5-24 6-1 thru 6-14 Ai thru Aii A-1 thru A-4 Bi thru Bii B-1 thru B-8 Ci thru Cii C-1 thru C-4 Di thru Dii D-1 thru D-16			This document is released in accordance with PRR PG3-1293.
Revision E 03/10/97	i-xii 1-1 thru 1*6 2-1 thru 2-2 3-1 thru 3-2 4-1 thru 4-12 5-1 thru 5-20 6-1 thru 6-38 7-1 thru 7-12 Ai thru Aii A-1 thru A-4 Bi thru Bii B-1 thru B-10 Ci thru Cii C-1 thru C-10 Di thru Dii D-1 thru D-18	4-9 thru 4-12 6-15 thru 6-38 7-1 thru 7-12 B-9 , B-10 C-5 thru C-10 D-17 , D-18	1-7 , 1-8 5-21 thru 5-24	This document is released in accordance with PRR PG3-1293. Due to extensive revisions, rev bars were not included.

DOC NO. D683-85130-9

DOCUMENT RELEASE RECORD (DRR)

RELEASES (& DATES)	Update this document by:			AUTHORIZATIONS (& REMARKS)
	ACTIVE PAGES	PAGES ADDED	PAGES DELETED	
Revision F 06/30/97	i-xiv 1-1 thru 1*6 2-1 thru 2-2 3-1 thru 3-2 4-1 thru 4-14 5-1 thru 5-22 6-1 thru 6-38 7-1 thru 7-12 Ai thru Aii A-1 thru A-4 Bi thru Bii B-1 thru B-10 Ci thru Cii C-1 thru C-14 Di thru Dii D-1 thru D-18	xiii, xiv 4-3 4-10 5-15 5-22 C-11 thru C-14		This document is released in accordance with PRR PG3-1293.
Revision G 08/13/97	i-xvi 1-1 thru 1*6 2-1 thru 2-2 3-1 thru 3-2 4-1 thru 4-22 5-1 thru 5-20 6-1 thru 6-38 7-1 thru 7-12 8-1 thru 8-4 Ai thru Aii A-1 thru A-4 Bi thru Bii B-1 thru B-10 Ci thru Cii C-1 thru C-14 Di thru Dii D-1 thru D-22	xii, xiv 4-15 thru 4-22 8-1 thru 8-4 D-4 thru D-5 D-21 thru D-22	5-21 5-22	This document is released in accordance with PRR PG3-1293.

DOC NO. D683-85130-9

DOCUMENT RELEASE RECORD (DRR)

RELEASES (& DATES)	Update this document by:			AUTHORIZATIONS (& REMARKS)
	ACTIVE PAGES	PAGES ADDED	PAGES DELETED	
Revision H	i-xvi 1-1 thru 1*6 2-1 thru 2-2 3-1 thru 3-2 4-1 thru 4-21 5-1 thru 5-20 6-1 thru 6-35 7-1 thru 7-12 8-1 thru 8-5 Ai thru Aii A-1 thru A-4 Bi thru Bii B-1 thru B-10 Ci thru Cii C-1 thru C-14 Di thru Dii D-1 thru D-22	xvii 8-5	4-22 6-37,6-38	This document is released in accordance with PRR PG3-1687.

DOC. NO.: D683-85130-9				
DOCUMENT RELEASE RECORD (DRR)				
RELEASES (&DATES)	Update this document by			AUTHORIZATIONS (& REMARKS)
	ACTIVE PAGES	PAGES ADDED	PAGES DELETED	
Revision J 12/14/07	i thru xviii 1-1 thru 1-6 2-1 thru 2-2 3-1 thru 3-2 4-1 thru 4-20 5-1 thru 5-20 6-1 thru 6-36 7-1 thru 7-12 8-1 thru 8-6 9-1 thru 9-40 A-i thru A-4 B-i thru B-10 C-i thru C-16 D-i thru D-22	9-1 thru 9-40		ECP HSV-H06-009 (Section 9 added to Acceptance Test Powered Bolt Nuts used for commercial applications)

ERU: Eva Schoen 12/20/07

SECTION		PAGE
	TITLE PAGE	i
	ABSTRACT AND KEY WORDS	ii
	DOCUMENT RELEASE RECORD	iii
	TABLE OF CONTENTS	viii
	ABBREVIATIONS AND ACRONYMS	xvi
1.	**INTRODUCTION**	**1–1**
1.1	PURPOSE	1–1
1.2	SCOPE	1–1
1.3	COMMON BERTHING MECHANISM DESCRIPTION	1–1
1.4	APPLICABLE DOCUMENTS	1–2
1.4.1	*Required Documents*	*1–2*
1.4.2	*Reference Documents*	*1–3*
1.5	GENERAL NOTES	1–4
1.5.1	*Document Handwrite Change Control*	*1–4*
1.5.2	*Warnings and Cautions*	*1–4*
1.5.3	*Task Sequencing*	*1–4*
1.5.4	*Repeat Operations*	*1–4*
1.5.5	*Unplanned Events*	*1–5*
1.5.6	*DCMC Notification*	*1–5*
1.5.7	*Safety Support*	*1–5*
1.5.8	*Hazardous Waste Handling*	*1–5*
1.5.9	*Test Conduct Ground Rules*	*1–6*
2.	**TEST OVERVIEW**	**2-1**
2.1	TEST ARTICLE	2-1
2.2	TEST FIXTURES	2-1
2.3	INSTRUMENTATION	2-1
2.3.1	*Functional Test*	*2-1*
2.3.2	*Vibration Test*	*2-2*
2.3.3	*Thermal Vacuum Test*	*2-2*
2.4	DATA ACQUISITION SYSTEM	2-2
2.5	TEST CONDITIONS	2-2
2.5.1	*Functional Test*	*2-2*
2.5.2	*Vibration/Vibroacoustic Test*	*2-2*
2.5.3	*Thermal Vacuum Functional Test*	*2-2*

3.	**ACCEPTANCE CRITERIA/PREREQUISITES**	**3-1**
3.1	GENERAL	3-1
3.2	ACCEPTANCE CRITERIA	3-1
3.3	PREREQUISITES	3-1
4.	**FUNCTIONAL ACCEPTANCE TEST**	**4-1**
4.1	GENERAL NOTES	4-1
4.2	FACILITY READINESS	4-1
4.3	INSTRUMENTATION AND TEST FIXTURE SETUP - CYCLE 0	4-1
4.3.1	*Setup*	*4-1*
4.3.2	*Checkout*	*4-2*
4.4	TEST ARTICLE SETUP	4-2
4.5	FUNCTIONAL PERFORMANCE TEST	4-4
4.5.1	*Initial Setup*	*4-4*
4.5.2	*DACS Startup*	*4-4*
4.5.3	*Functional Test Run*	*4-5*
4.6	DATA VERIFICATION	4-6
4.7	DACS SAFING AND POWER DOWN	4-6
4.8	FUNCTIONAL TEST TEARDOWN	4-7
4.9	INSTRUMENTATION AND TEST SETUP - CYCLE 0	4-7
4.9.1	*Setup*	*4-7*
4.9.2	*Checkout*	*4-8*
4.10	TEST ARTICLE SETUP	4-9
4.11	FUNCTIONAL PERFORMANCE TEST	4-11
4.11.1	*Initial Setup*	*4-11*
4.11.2	*DACS Startup*	*4-11*
4.11.3	*Functional Test Run*	*4-11*
4.12	DATA VERIFICATION	4-12
4.13	DACS SAFING AND POWER DOWN	4-12
4.14	FUNCTIONAL TEST TEARDOWN	4-12
4.14.1	PRE-THERMAL VACUUM VIBRATION TEST (OPTIONAL)	4-13
4.15	INSTRUMENTATION AND TEST FIXTURE SETUP - CYCLE 1	4-13
4.15.1	*Setup*	*4-13*
4.16	FUNCTIONAL PERFORMANCE TEST	4-14
4.16.1	*Initial Setup*	*4-14*
4.16.2	*DACS Startup*	*4-14*
4.16.3	*Functional Test Run*	*4-15*
4.17	DATA VERIFICATION	4-16
4.18	DACS SAFING AND POWER DOWN	4-16
4.19	FUNCTIONAL TEST TEARDOWN	4-16
4.20	INSTRUMENTATION AND TEST SETUP - CYCLE 1	4-17
4.20.1	*Setup*	*4-17*
4.21	TEST ARTICLE SETUP	4-17
4.22	FUNCTIONAL PERFORMANCE TEST	4-18
4.22.1	*Initial Setup*	*4-18*
4.22.2	*DACS Startup*	*4-18*

4.22.3	*Functional Test Run*	*4-19*
4.23	DATA VERIFICATION	4-19
4.24	DACS SAFING AND POWER DOWN	4-19
4.25	FUNCTIONAL TEST TEARDOWN	4-20
5.	**VACUUM ACCEPTANCE TEST**	**5-1**
5.1	GENERAL NOTES	5-1
5.2	FACILITY READINESS	5-1
5.3	INSTRUMENTATION AND TEST FIXTURE SETUP	5-1
5.3.1	*Setup*	*5-1*
5.3.2	*Checkout*	*5-2*
5.4	TEST ARTICLE SETUP	5-3
5.5	VACUUM FUNCTIONAL TEST	5-4
5.5.1	*Test Conduct*	*5-4*
5.6	DATA VERIFICATION	5-10
5.7	DACS SAFING AND POWER DOWN	5-10
5.8	VACUUM TEST TEARDOWN	5-11
5.9	INSTRUMENTATION AND TEST FIXTURE SETUP	5-12
5.9.1	*Setup*	*5-12*
5.9.2	*Checkout*	*5-12*
5.10	TEST ARTICLE SETUP	5-13
5.11	VACUUM FUNCTIONAL TEST	5-14
5.11.1	*Initial Setup*	*5-14*
5.11.2	*DACS Startup*	*5-15*
5.11.3	*Test Conduct*	*5-15*
5.12	DATA VERIFICATION	5-19
5.13	THERMAL VACUUM TEST TEARDOWN	5-20
6.	**VIBRATION/VIBROACOUSTIC TEST**	**6-1**
6.1	GENERAL NOTES - VIBRATION TEST	6-1
6.2	FACILITY READINESS	6-1
6.3	POST TRIM / PRE VIBE FUNCTIONAL TEST	6-2
6.3.1	*Setup*	*6-2*
6.3.2	*Checkout*	*6-2*
6.4	TEST ARTICLE SETUP	6-3
6.5	FUNCTIONAL PERFORMANCE TEST	6-4
6.5.1	*Initial Setup*	*6-4*
6.5.2	*DACS Startup*	*6-4*
6.5.3	*Functional Test Run*	*6-5*
6.6	DATA VERIFICATION	6-6
6.7	DACS SAFING AND POWER DOWN	6-6
6.8	FUNCTIONAL TEST TEARDOWN	6-7
6.9	INSTRUMENTATION AND TEST FIXTURE SETUP / CHECKOUT	6-8
6.9.1	*Setup*	*6-8*
6.9.2	*Checkout*	*6-8*
6.10	TEST ARTICLE SETUP	6-9

6.11	FUNCTIONAL PERFORMANCE TEST	6-10
6.11.1	*Initial Setup*	*6-10*
6.11.2	*DACS Startup*	*6-10*
6.11.3	*Functional Test Run*	*6-11*
6.12	DATA VERIFICATION	6-11
6.13	DACS SAFING AND POWER DOWN	6-12
6.14	FUNCTIONAL TEST TEARDOWN	6-12
6.15	VIBRATION ACCEPTANCE TEST	6-13
6.15.1	*Axial Direction Vibration Test Setup*	*6-13*
6.15.2	*Axial Direction Vibration Test*	*6-14*
6.15.3	*Axial Direction Vibration Test Teardown*	*6-15*
6.15.4	*Radial Direction Vibration Test Setup*	*6-16*
6.15.5	*Radial Direction Vibration Test*	*6-17*
6.15.6	*Radial Direction Vibration Test Teardown*	*6-18*
6.15.7	*Tangential Direction Vibration Test Setup*	*6-19*
6.15.8	*Tangential Direction Vibration Test*	*6-20*
6.15.9	*Tangential Direction Vibration Test Teardown*	*6-21*
6.16	GENERAL NOTES - VIBROACOUSTIC TEST	6-22
6.17	FACILITY READINESS	6-22
6.18	VIBROACOUSTIC TEST	6-22
6.18.1	*Vibroacoustic Test Setup*	*6-22*
6.18.2	*Vibroacoustic Test*	*6-23*
6.18.3	*Vibroacoustic Test Teardown*	*6-25*
6.19	POST VIBRATION/VIBROACOUSTIC FUNCTIONAL TEST	6-26
6.19.1	*Test Article Setup*	*6-26*
6.19.2	*Initial Setup*	*6-27*
6.19.3	*DACS Startup*	*6-27*
6.19.4	*Functional Test Run*	*6-28*
6.19.5	*Data Verification*	*6-28*
6.19.6	*DACS Safing And Power Down*	*6-29*
6.20	FUNCTIONAL TEST TEARDOWN	6-29
6.21	INSTRUMENTATION AND TEST FIXTURE SETUP/CHECKOUT	6-30
6.21.1	*Setup*	*6-30*
6.21.2	*Checkout*	*6-30*
6.22	TEST ARTICLE SETUP	6-31
6.23	FUNCTIONAL PERFORMANCE TEST	6-32
6.23.1	*Initial Setup*	*6-32*
6.23.2	*DACS Startup*	*6-33*
6.23.3	*Functional Test Run*	*6-33*
6.24	DATA VERIFICATION	6-34
6.25	DACS SAFING AND POWER DOWN	6-34
6.26	FUNCTIONAL TEST TEARDOWN	6-34
7.	**POST THERMAL FUNCTIONAL ACCEPTANCE TEST**	**7-1**
7.1	GENERAL NOTES	7-1
7.2	FACILITY READINESS	7-1
7.3	INSTRUMENTATION AND TEST FIXTURE SETUP/CHECKOUT	7-1

7.3.1	*Setup*	*7-1*
7.3.2	*Checkout*	*7-1*
7.4	TEST ARTICLE SETUP	7-3
7.5	FUNCTIONAL PERFORMANCE TEST	7-4
7.5.1	*Initial Setup*	*7-4*
7.5.2	*DACS Startup*	*7-4*
7.5.3	*Functional Test Run*	*7-5*
7.6	DATA VERIFICATION	7-5
7.7	DACS SAFING AND POWER DOWN	7-6
7.8	FUNCTIONAL TEST TEARDOWN	7-6
7.9	INSTRUMENTATION AND TEST FIXTURE SETUP / CHECKOUT	7-7
7.9.1	*Setup*	*7-7*
7.9.2	*Checkout*	*7-7*
7.10	TEST ARTICLE SETUP	7-8
7.11	FUNCTIONAL PERFORMANCE TEST	7-9
7.11.1	*Initial Setup*	*7-9*
7.11.2	*DACS Startup*	*7-9*
7.11.3	*Functional Test Run*	*7-10*
7.12	DATA VERIFICATION	7-10
7.13	DACS SAFING AND POWER DOWN	7-11
7.14	FUNCTIONAL TEST TEARDOWN	7-11
8.	**PERFORMANCE RETEST / FAULT ISOLATION TESTS**	**8-1**
8.1	FUNCTIONAL RETEST SEQUENCE	8-1
8.2	TORQUE PERFORMANCE RETEST / ISOLATION SEQUENCE	8-2
8.2.1	*Data Review*	*8-2*
8.2.2	*Retest Procedure*	*8-2*
8.3	TORQUE PERFORMANCE RETEST	8-3
8.3.1	*Sliding Friction Test*	*8-3*
8.3.2	*Retest Procedure*	*8-4*
9.	**POWERED BOLT NUT ACCEPTANCE TEST**	**9-1**
9.1	FUNCTIONAL TEST – CYCLE 0	9-1
9.1.1	*General Notes*	*9-1*
9.1.2	*Facility Readiness*	*9-1*
9.1.3	*Instrumentation and Test Fixture Setup – Cycle 0*	*9-1*
9.1.4	*Checkout*	*9-1*
9.1.5	*Test Article Setup*	*9-3*
9.1.6	*Functional Performance Test*	*9-4*
9.1.7	*Data Verification*	*9-5*
9.1.8	*DACS Safing and Power Down*	*9-5*
9.1.9	*Functional Test Teardown*	*9-6*
9.2	FUNCTIONAL TEST – CYCLE 1	9-7
9.2.1	*General Notes*	*9-7*
9.2.2	*Setup*	*9-7*
9.2.3	*Test Article Setup*	*9-7*

9.2.4	*DACS Startup*	*9-8*
9.2.5	*Functional Test Run*	*9-8*
9.2.6	*Data Verification*	*9-9*
9.2.7	*DACS Safing and Power Down*	*9-9*
9.2.8	*Functional Test Teardown*	*9-10*
9.3	VACUUM ACCEPTANCE TEST	9-11
9.3.1	*General Notes*	*9-11*
9.3.2	*Setup*	*9-11*
9.3.3	*Checkout*	*9-11*
9.3.4	*Test Article Setup*	*9-12*
9.3.5	*Vacuum Functional Test*	*9-13*
9.3.6	*Test Conduct*	*9-14*
9.3.7	*Data Verification*	*9-18*
9.3.8	*Thermal Vacuum Shutdown*	*9-18*
9.3.9	*Vacuum Test Teardown*	*9-19*
9.4	PRE-VIBRATION FUNCTIONAL TEST	9-20
9.4.1	*General Notes*	*9-20*
9.4.2	*Facility Readiness*	*9-20*
9.4.3	*Pre Vibe Functional Test*	*9-20*
9.4.4	*Checkout*	*9-21*
9.4.5	*Test Article Setup*	*9-22*
9.4.6	*Functional Performance Test – Cycle 25*	*9-23*
9.4.7	*Data Verification*	*9-24*
9.4.8	*DACS Safing and Power Down*	*9-24*
9.4.9	*Pre-Vibration Functional Test Teardown*	*9-24*
9.5	VIBRATION ACCEPTANCE TEST	9-26
9.5.1	*Axial Direction Vibration Test Setup*	*9-26*
9.5.2	*Axial Direction Vibration Test*	*9-27*
9.5.3	*Axial Direction Vibration Test Teardown*	*9-28*
9.5.4	*Radial Direction Vibration Test Setup*	*9-29*
9.5.5	*Radial Direction Vibration Test*	*9-29*
9.5.6	*Radial Direction Vibration Test Teardown*	*9-31*
9.5.7	*Tangential Direction Vibration Test Setup*	*9-31*
9.5.8	*Tangential Direction Vibration Test*	*9-33*
9.5.9	*Tangential Direction Vibration Test Teardown*	*9-34*
9.6	POST VIBRATION FUNCATIONAL TEST	9-35
9.6.1	*General Notes*	*9-35*
9.6.2	*Setup*	*9-35*
9.6.3	*Checkout*	*9-35*
9.6.4	*Test Article Setup*	*9-37*
9.6.5	*Functional Performance Test*	*9-37*
9.6.6	*DACS Startup*	*9-38*
9.6.7	*Functional Test Run*	*9-38*
9.6.8	*Data Verification*	*9-39*
9.6.9	*DACS Safing and Power Down*	*9-39*
9.6.10	*Functional Test Teardown*	*9-39*

APPENDICES:

A.	EQUIPMENT LIST	A-1
A.1	GENERAL NOTES	A-1
B.	SAFETY	B-1
B.1	EMERGENCY/ACCIDENT PROCEDURES	B-1
B.1.1	*Definitions*	*B-1*
B.1.2	*Emergency Exits and Equipment*	*B-1*
B.1.3	*Emergency/Accident Reporting*	*B-4*
B.1.4	*Systems Emergency Procedures*	*B-8*
B.1.5	*Personnel Emergency/Accident Procedures*	*B-9*
C.	S/W USERS GUIDE	C-1
C.1	OVERVIEW	C-1
C.2	STARTUP AND DIRECTORY	C-1
C.3	USER INPUT	C-1
C.4	EMERGENCY MOTOR STOP	C-1
C.5	MANUAL MOTOR MOVEMENT	C-1
C.6	AUTO MOTOR MOVEMENT	C-3
C.7	ZEROING	C-3
C.8	DATA RECORDING	C-3
C.9	CALIBRATION VALUES	C-3
C.10	POWER ON	C-3
C.11	INPUT VERIFICATION OF CALIBRATION VALUES	C-4
C.12	SET-UP AND INITIALIZATION	C-5
C.13	BOLT WINDOW INITIALIZATION AND SET-UP	C-5
C.14	BOLT WINDOW OPERATION	C-6
C.15	FILE MINIPULATION AND PROGRAM TERMINATION	C-9
C.16	DATA LABELING AND HANDLING	C-9
C.17	HANDWRITE CHANGES	C-11
C.17.1	*Instructions*	*C-11*
C.17.2	*Responsibilities*	*C-12*
C.17.3	*Handwrite Log Forms*	*C-13*
D.	DATA SHEETS	D-1
D.1	OVERVIEW	D-1
D.2	ACCEPTANCE CRITERIA	D-1
D.3	INITIAL REQUIREMENTS	D-1
D.4	DATA RECORDING AND SIGNATURE BUYOFF	D-1

LIST OF FIGURES

8-1	POWER BOLT NUT ASSY	8-4
B-1	FACILITY LAYOUT	B-2
B-2	FACILITY LAYOUT (SEATTLE)	B-3
B-3	FLASH REPORTING SEQUENCE	B-5
B-4	FLASH REPORTING SEQUENCE (SEATTLE)	B-6
B-5	MSFC EMERGENCY NUMBERS	B-7
C-1	MOTOR CONTROL SCREEN	C-2

LIST OF TABLES

A-1	FUNCTIONAL TEST	A-2
A-2	VIBRATION TEST	A-3
A-3	VACUUM TEST	A-4

ABBREVIATIONS AND ACRONYMS

ACBM	Active Common Berthing Mechanism
A/R	As Required
CBM	Common Berthing Mechanism
CR	Carriage Return
DACS	Data Acquisition and Control System
dB	Decibel
DCMC	Defense Contracts Management Command
DRR	Document Release Record
H/W	Hardware
Hg	Mercury
Hz	Hertz
IE	Instrumentation Engineer
IRSO	Integrated Record System Order
Lbs.	pounds
MACCS	Manufacturing Automated Cost Collection System
MB	Megabyte
MSFC	Marshall Space Flight Center
NASA	National Aeronautics and Space Administration
ORI	Operational Readiness Inspection
OSHA	Occupational Safety and Health Administration
PB	Powered Bolt
PBLC	Powered Bolt Load Cell
PBN	Powered Bolt Nut
PC	Personal Computer
PCBM	Passive Common Berthing Mechanism
P/N	Part Number
PS	Program Safety
QA	Quality Assurance
S/N	Serial Number
S/W	Software
SSP	Space Station Program
TC	Test Conductor
TD	Test Director
TO	Test Operations
TP	Test Procedure
TSE	Test Support Equipment

(This Page Intentionally Blank)

SECTION 1, INTRODUCTION

1.1 PURPOSE

The Common Berthing Mechanism (CBM) Powered Bolt Nut (PBN) Assembly Acceptance Test Procedure (TP), D683-85130-9, details the procedures necessary to verify the CBM PBN component was manufactured as designed with no defects.

1.2 SCOPE

This document provides the detailed test procedures to satisfy the test requirements listed in SSP-41172, ‘‘International Space Station Alpha Program Qualification and Acceptance Environmental Test Requirements.” The details listed herein, in conjunction with the PBN Flight Article and Test Drawings, will describe the necessary H/W configuration, test equipment set-ups, instrumentation and data requirements, test sequence steps, transportation, safety concerns, test objectives, and any other details necessary to verify these requirements.

Section 9 has been added to this document (Rev “J”) to acceptance test Powered Bolt Nuts manufactured for commercial applications. Sections 4 thru 8 have been retained for NASA contracted hardware.

1.3 COMMON BERTHING MECHANISM DESCRIPTION

The CBM system is a combination of structural, mechanical and control components that perform the capture, closure, and passive structural connection between two berthed, pressurized modules. The total CBM system is composed of two distinct sets of equipment - the active half and the passive half. The active half supports the mechanical and control elements which effect the actual capture and closure functions of the berthing operations. The passive half contains the inert elements required to complete the berthing and closure action.

The Alignment Guides are installed around the active CBM along with mating alignment guides mounted on the passive CBM. The alignment guides provide alignment of the two halves for capture latch/fitting and PB/Nut operation.

The Capture Latches bring the berthing mechanism halves into close proximity of each other (< .2 inches). There are four (4) Capture Latches in the active half of the CBM and four (4) Capture Fittings in the passive half.

The Powered Bolts, (PBs) complete the berthing process by bolting the two halves together. They react the internal pressure loads and the on-orbit dynamic loads between the Active and Passive Berthing Mechanism halves. There are 16 PBs in the active half of the CBM with 16 mating nuts on the passive side.

1.4 APPLICABLE DOCUMENTS

1.4.1 *Required Documents*

The documentation listed below is required in the performance of this procedure.

Boeing Sketches

D180-14310-2A.7	Huntsville Spill Control & Countermeasure Plan
D483-50034-1	Huntsville Laboratory Safety Plan
NHB 1700.1	Basic Safety Manual
SSP-41172	Qualification and Acceptance Environmental Test Requirements
SK683-13741	Powered Bolt Functional Test Fixture Assembly
SK683-13744	Powered Bolt Vacuum Test Fixture Assembly
SK683-23504	Powered Bolt Acceptance Test Functional Test Setup Drawing
SK683-23505	Powered Bolt Acceptance Test Vibration Test Setup Drawing
SK683-23510	PC Configuration/Instrumentation and Control Systems Setup Drawing
SK683-23620	Powered Bolt Acceptance Test Fixture Assembly
SK683-82154	Powered Bolt Vibration Test Fixture Assembly
ET01-SOP-01	Standard Operating Procedures for Safety Critical Operations

1.4.2 *Reference Documents*

The documentation listed below is applicable to this test and may be used as a source of information; but is not all required during the performance of this procedure.

Boeing Documents:

BA850-085	Operational Readiness Inspection (ORI)
D683-10079-1	Safety Plan
D683-35035-1	SSF Environmental Management Plan and Procedures - MSFC
D683-85001-1	Qualification, Protoflight and Acceptance Testing Operating Instructions
D683-85134-1	Vibroacoustic Fixture Certification Procedure
D2-107000-1	Aerospace Operations Standard Integrated Record System
D2-107006-1	Calibration Requirements Measurement and Test Equipment
DI4804-0100	Boeing Fire Prevention Manual
D950-10000-1	Government Property Control Document
MOI-1.001	Huntsville Materials Control/Handling

Boeing Specifications:

S683-28943B	Critical Item Development Specification, CI# 683A50A
S683-29528B	Critical Item Development Specification, CI# 683D27A
S683-29902	Prime Item Development Specification Type B1 for the Active Common Berthing Mechanism

Boeing Drawings

683-13450	Powered Bolt Assembly
683-13503	Powered Bolt Nut Assembly

1.5 GENERAL NOTES

1.5.1 *Document Handwrite Change Control*

This document is subject to handwrite changes while in use in the test area.

Handwritten entries will be controlled and documented in the Handwrite Change Control Log per document D683-85001-1 Rev C, paragraph 3.4. All handwrites must be approved by the Test Conductor (TC) prior to implementation. Boeing Quality Assurance (QA) will validate all handwrites. The Defense Contracts Management Command (DCMC) representative will be notified of all handwrite changes and will be given the opportunity to approve all technical handwrite changes. If safety is affected then Safety must also approve changes. The following Boeing personnel are authorized to make handwrite changes to this document.

Kevin MacQuinn	Phil Pettie	Bobby Gant
David Williams	Wayne Arrington	

1.5.2 *Warnings and Cautions*

Prior to performing an operation, test personnel must be familiar with all General Notes, Warnings, Cautions, Special Instructions and Safety Precautions contained in the referenced documents and drawings unless otherwise specified within this Test Procedure.

1.5.3 *Task Sequencing*

The procedures outlined in this document are written to assure technical completion of a specified task and are not necessarily sequenced to provide optimum crew/tool equipment utilization. The work is to be accomplished as sequenced unless it is more efficient to parallel the operations. The responsible TC must first evaluate the change to assure that there are no degradations of technical requirements, system safety, personnel safety, scheduling, etc. The responsible TC will give the verbal authorization to proceed.

1.5.4 *Repeat Operations*

Operations that must be repeated require approval of the TC and DCMC prior to proceeding and will be performed in accordance with D683-85001-1 Rev C, paragraph 3.6.

1.5.5 *Unplanned Events*

If an unplanned event, hazard, or emergency occurs, the personnel concerned will take appropriate action to ensure personnel and equipment safety, then report it to the TC. When a hazard or emergency exists, the TC will initiate the Flash Reporting Sequence, notify the MSFC facility manager and act as the focal point for any further effort required. Reference D683-85001-1 Rev C, subparagraph 6.4.4 and Appendix A subparagraph A.1.5.9. The Manufacturing Automated Cost Collection System (MACCS) ID number must be recorded on the Unplanned Event forms.

1.5.6 *DCMC Notification*

DCMC will be notified through the site QA representative a minimum of forty eight hours prior to start of a mandatory DCMC witnessed task. DCMC is not required for acceptance testing of Powered Bolt Nuts for commercial applications.

1.5.7 *Safety Support*

A. Safety, Medical and Industrial Hygiene Procedures established in Boeing Document D483-50034-1, Revision B, dated December 17, 1990, and National Aeronautics and Space Administration (NASA) Standard NHB 1700.1 will be strictly adhered to throughout all phases of test activity. All activities on a day-by-day basis will be coordinated with the appropriate MSFC Safety personnel.

B. The operational procedures and policies set forth in ET01-SOP-01, “Standard Operating Procedures for Safety Critical Operations” will be adhered to during all phases of test activities in MSFC Building 4619.

C. Boeing Safety. Standard Laboratory Procedures will be emphasized and adhered to during test setup and test conduct. Boeing Safety will be involved in all phases of the test. The following practices will be followed:

(1) A safety briefing will be conducted prior to each test day.

(2) Only personnel authorized by the Test Director (TD) and/or the TC will be allowed access to the test area.

(3) Approved lifting devices will be used when lifting the components and/or test fixtures.

1.5.8 *Hazardous Waste Handling*

Hazardous material identification, collection, labeling, storage, transportation and disposal are to be in compliance with Boeing Huntsville Spill Control Countermeasures Plan (D180-14310-2A.7) and Huntsville Laboratory Safety Plan (D483-50034-1).

1.5.9 *Test Conduct Ground Rules*

The rules as defined in the following subparagraphs will be followed during all test activities:

A. The TC will control all aspects of test preparation and test conduct. No test activities will be undertaken without the TC's knowledge and concurrence.

B. All test team personnel will respond only to the direction of the TC regarding matters of test procedure interpretation and performance.

C. The test preparation and test conduct will be performed step by step in accordance with the sequence and procedure contained in this document, unless specific deviation is given by the TC.

D. A complete chronological history of test setup and conduct will be maintained in the Test Conductor's Log. This log will indicate time, date and description of all significant events occurring during test setup and conduct. All entries will be clearly written in black ink for reproducibility. Additional log pages will be added as required during test.

E. After the test conduct has begun, all test team personnel will insure that the test configuration and status are clearly described to alternate test team members at shift changes or when new personnel are introduced to the test (per the TC's direction).

F. All test personnel are expected to implement and adhere to safety requirements during test setup and conduct; however, the TC is specifically responsible for ensuring that general and specific safety requirements are properly met and all necessary procedures are complied with by personnel involved in the test or around the test setup.

G. Any test condition which indicates that equipment damage or loss, and/or injury or death to personnel has or is likely to occur is grounds for stopping the test and initiating appropriate action. Applicable procedures to render safe conditions will be implemented and Safety shall be notified per Appendix B, whereupon an investigation will be made to determine condition, cause and test impact. Equipment will be maintained in their failed condition until cause is determined, unless further damage or personnel injury would occur.

SECTION 2, TEST OVERVIEW

The Powered Bolt Nut (PBN) Assembly Acceptance Tests will be conducted in MFSC Building 4619, under normal environmental conditions (clean room not required), or equivalent. The MSFC Standard Operating Procedures, as established by the MSFC Laboratory Manager, will be adhered to by all personnel associated with the test site.

2.1 TEST ARTICLE

The Powered Bolt Nut test article will consist of one PBN, P/N 683-13503. During the vibration test, multiple combinations of PBs or PBs/PBN may be tested to reduce schedule risks.

2.2 TEST FIXTURES

The PBN acceptance tests will utilize one or more ambient functional test fixture assemblies, one or more vibration test fixture assemblies and one or more thermal vacuum functional test fixtures.

The Functional Test Fixture Assembly, SK683-13741 or SK683-23620, will be utilized during ambient functional test scenarios.

The Vibration Test Fixture Assembly, SK683-82154, will be utilized during the vibration test as an interface between the test articles and the vibration tables. The test article will be configured per drawing SK683-23505.

The Vacuum Test Fixture Assembly, SK683-23620-1, will be utilized during thermal vacuum functional test scenarios. The Functional Test Fixture Assembly, SK683-13741, may also be reconfigured to a SK683-13744 for vacuum functional tests.

2.3 INSTRUMENTATION

The following sections detail the instrumentation to be employed for the PBN acceptance test. Data from the functional test instrumentation will be recorded on the Boeing Data Acquisition and Control System (DACS). All instrumentation will be checked out prior to test.

Data from the vibration test will be recorded using Test Facility DACS. No instrumentation transducers will be installed on the test articles during test.

Data from the vacuum functional tests will be recorded on the Boeing Data Acquisition and Control System (DACS). All instrumentation will be checked out prior to test.

2.3.1 *Functional Test*

Preload data will be collected from the fixture load cell. Cycle number, the input torque and motor position will also be recorded. All data will be recorded by the DACS.

2.3.2 *Vibration Test*

Three uniaxial control accelerometers, one for each axis, will be used during the vibration test. The transducers and data recording system will be provided by the Test Facility.

2.3.3 *Thermal Vacuum Test*

Preload data will be collected from the fixture load cell. Cycle number, the input torque and motor position will also be recorded. All data will be recorded by the DACS. Thermal control data will also be recorded by the DACS.

2.4 DATA ACQUISITION SYSTEM

The PBN Assembly functional acceptance test will use a Boeing provided DACS. The DACS consists of a keyboard and display unit, central processing unit, digital bus, storage devices, analog/digital converters and signal conditioning/input sections. The DACS will be located in the test area and will be interfaced to the test instrumentation through Boeing provided cables.

Following test completion, test data will be handled per Appendix C. The DACS will be setup, adjusted and maintained by Boeing personnel at all times. The DACS will be configured per drawings SK683-23510, "PC Configuration/Instrumentation and Control Systems Setup Drawing."

2.5 TEST CONDITIONS

The PBN assembly acceptance tests consist of an ambient functional test, a vibration test, and a thermal vacuum functional test.

2.5.1 *Functional Test*

The functional test is designed to determine the operational characteristics of the PBN assemblies.

2.5.2 *Vibration/Vibroacoustic Test*

The vibration/vibroacoustic test will verify that the PBN can withstand the launch vibration environments. As a part of the test requirements, a functional test will be performed following the vibration/vibroacoustic test.

2.5.3 *Thermal Vacuum Functional Test*

The thermal vacuum functional test is designed to verify the operational characteristics of the PBN assemblies under on-orbit conditions.

SECTION 3, ACCEPTANCE CRITERIA/PREREQUISITES

3.1 GENERAL

A. Final QA, Shop, and TC buyoffs will be performed on the Integrated Record System Order (IRSO). All data will be recorded in Appendix D or other TC approved data sheets.

B. Section 9 of this procedure shall be used to Acceptance Test Commercial Application Powered Bolt Buts.

3.2 ACCEPTANCE CRITERIA

A. The functional test requirement for cycles 0 through 24 will be considered successful with a minimum preload of 19,300 lbs and a maximum input torque of 1600 in. lbs for cycles 0 and 1, 800 in-lbs for cycles 2 through 24. This preload measurement will be taken from the Test Fixture Load Cell.

B. The Vacuum Torque Acceptance test requirement listed in the test steps will be considered successful if the average increase in Input Torque for the specified cycles (cycles 17-21) is less than 10 in-lbs. (Required input torque still has to meet the requirement of Step 3.2A).

C. The Vibration/Vibroacoustic Test will be considered successful if the Test Article passes the post-test functional test as listed in the test steps.

D. The functional test requirement for cycles 25 through 29 will be considered successful with a minimum preload of 17,500 pounds and a maximum input torque of 1510 in-lbs. This preload measurement shall be taken from the test fixture load cell.

3.3 PREREQUISITES

A. If the functional test fixture and setup have been disconnected/moved, then a checkout of the test setup must be performed per paragraphs 4.2 and 4.3.

B. All manual data recording and buyoff signatures for the Powered Bolt will be recorded in Appendix D (or other TC Approved Data Sheets) of this document. At the completion of this test series, remove Appendix D (or Data Sheets) from this procedure and attach it to the individual test article's IRSO.

(This Page Intentionally Blank)

SECTION 4, FUNCTIONAL ACCEPTANCE TEST

4.1 GENERAL NOTES

A. This Section of the Test Procedure performs the first Functional Test on the PBN Test Articles.

B. All manual data recording and procedure step buyoffs are to be recorded in Appendix D. If a Flight PB and a Flight PBN are being accepted together, data must be recorded in each test articles' Appendix D.

C. Sections 4.2 and 4.3 (or 4.9 for thermal fixture) are not required if the test fixture has already been checked out in its current location. Section 4.3.2 (all or part) (or 4.9.2 for thermal fixture) may be performed at any time at IE's or TC's direction.

4.2 FACILITY READINESS

A. Record facility location in Appendix D.

4.3 INSTRUMENTATION AND TEST FIXTURE SETUP - CYCLE 0

This section of the document contains two setup procedures, if using test fixture SK683-13741, refer to sections 4.3.1 through 4.8, and if using test fixture SK683-23620 refer to sections 4.9 through 4.14.

4.3.1 *Setup*

NOTE: This section contains the steps for performance of the PBN Functional Test Instrumentation, Motor Control System, and Test Fixture setup. Software operation is defined in Appendix C.

A. Position the Functional Test Fixture Assembly, SK683-23504 or SK683-23620, in the planned test area. (SK683-13744 is allowable if functional tests are to be conducted inside the vacuum chamber.) Record Fixture Assy Part Number (P/N) and Serial Number (S/N) in Appendix D.

B. Setup the PC Control and Instrumentation System per drawing SK683-23510.

C. Connect the cables from the PB Actuator to the power control rack per SK683-23510.

4.3.2 *Checkout*

A. Power on the DACS and load the executable S/W. Record name and revision level of S/W in Appendix D.

B. Input the calibration values for the fixture load and torque on the Motor Control Screen. (Calibration values available from Calibration Data Sheets).

C. Zero the fixture load offset using the F8 key on the Motor Control Screen.

D. Apply the required precision shunt resistance (from Calibration Data Sheet) to the fixture load cell across - EXC and - SIG pins..

E. Verify the displayed value for the load is of proper polarity and amount (Range = value from Calibration Data Sheet +/- 100 lbs.). Record in Appendix D.

F. Remove the precision resistance from the fixture load cell.

G. Verify the calibration value for the torque cell has been loaded and verify proper values on the Motor Control Screen

H. Zero the torque offset using the F5 key on the Motor Control Screen.

I. Manually apply a torque to the torque cell.

J. Verify the displayed value on the Motor Control Screen is of proper polarity and amount for the torque cell measurement in comparison to Torque Cell Digital Display.

K. Remove the applied torque from the torque cell.

L. Zero load and torque offsets using the F5 and F8 keys on the Motor Control Screen.

M. Zero the Rev Positions using the F3 key on the Motor Control Screen.

N. Enter a Data File Name on the Motor Control Screen.

O. Verify the operation of Manual Motor Movement per Appendix C.

P. Verify the operation of Auto Motor Movement per Appendix C.

Q. Verify the operation of Emergency Motor Stop function using F7.

R. Verify that data was written to the DACS hard disk under the name input from above.

S. Per Test Conductor (TC) direction power down the DACS, if required.

4.4 TEST ARTICLE SETUP

A. Acquire all equipment required for this section as specified in Appendix A. Record required equipment P/Ns and S/Ns in Appendix D. Verify that the DACS equipment is in calibration and record required calibration dates in Section 4.4 of Appendix D.

CAUTION

USE EXTREME CARE WHEN HANDLING TEST ARTICLES. CLEAN WHITE COTTON GLOVES MUST BE WORN WHEN HANDLING TEST ARTICLES.

B. Perform Bolt/Nut inspection and checkout per the following: (This step performs a visual inspection and thread engagement check of a Powered Bolt and Powered Bolt Nut prior to installation into the Functional or Thermal Vacuum Fixture.)

(1) Record the Part Number (P/N) and Serial Number (S/N) of the Test Article in Appendix D.

(2) Perform the Sliding Friction Test per Section 8.3.1.

(3) If a Flight Powered Bolt is being tested with this Powered Bolt Nut, perform Powered Bolt inspection per D683-85130-7. If a Test Support Bolt is being used, go to next step.

(4) Record the P/N and S/N of the mating test article (Powered Bolt (PB) being used for this test.

(5) Install SK683-23656-1 Hub Assembly onto Powered Bolt motor drive flange using 683-13453 (or SK683-13453-1) Threaded Collar. Tighten Collar to hand tight only.

(6) Hand turn Hub Assy shaft in a clockwise direction. Hub should turn freely. Powered Bolt threads will start out of lower housing.

(7) Continue turning Hub for approximately 22 revs until Bolt is fully extended. Carefully inspect bolt threads for abnormalities, especially the thread lead.

(8) Remove Powered Bolt Nut from shipping container and packaging material. Perform visual inspection and record results in Appendix D.

(9) Use certified Thread Gage P/N Threadwell 5/8-18UNF3B to verify threads on Powered Bolt Nut. (NOTE: "Go" end of tool should thread in smoothly, do not use "No Go" end of tool for this test.) Record results in Appendix D.

(10) Align Powered Bolt Nut with Powered Bolt and hand turn in a clockwise direction as required to engage Bolt. Nut should turn freely.

(11) Continue turning approximately 7 turns (Do NOT allow Nut to make contact with the Bolt Housing). Note any visual abnormalities and/or turning resistance in Appendix D.

(12) Unthread Nut from Bolt in a counterclockwise direction. Note any visual abnormalities and/or turning resistance in Appendix D.

(13) Hand turn Hub Shaft in a counterclockwise direction to retract threaded bolt back into Powered Bolt Lower Housing. Continue turning Hub for approximately 23 revs until Bolt threads out of follower (Bolt will start to ratchet). Note any visual abnormalities and/or turning resistance in Appendix D.

(14) Remove Hub Assembly and Threaded Collar from Powered Bolt.

C. Install Test Article in the Functional Test Fixture per SK683-23504.

D. Record the P/N and S/N of the mating test article (PB) being used for this test.

E. Set gap between active and passive flanges (Range = .275 to .325 in.). Record flange gap in Appendix D.

F. Setup the Ambient Condition Monitor and verify the capability to monitor ambient temperature, relative humidity, and atmospheric pressure.

G. Record Section complete in Appendix D.

NOTE: The Test Setup required to support Functional Test Conduct has been completed. Functional Test Conduct may now be performed.

4.5 FUNCTIONAL PERFORMANCE TEST

4.5.1 *Initial Setup*

A. Verify a PB and a PBN have been installed on the functional test fixture and instrumentation checkout completed.

B. Verify that Boeing Instrumentation and Test Operations personnel are ready to start test.

4.5.2 *DACS Startup*

NOTE: A User's Guide to the manipulation of the executable S/W is located in Appendix C.

A. Verify that the DACS is on and operational.

B. On the Motor Control page, enter/verify the following parameters using the F1 key per the Test Conductor's direction (see Figure C-1):

(1) Bolt serial no.
Nut serial no.
test designation (AMB_FUN)
RPM (0)
torque and load limits (1600, 19300)
direction of travel (in)
no. of revs (0)
start and end cycles (0,0)
recording (off)
data file name (see note below)
control scenario (auto)
fixture load cal value (from cal data sheets)
torque cal value (from cal data sheets)

Note: Data file name will be as follows:
For PBN: PBNxxxxA - where xxxx is the SN of the PBN Assembly

NOTE: If both a Flight PB and PBN are being tested, the PB SN will be used.

(2) Record Bolt and Nut S/N's, Data File Name and Cal values in the appropriate Table in Section 4.5.2 of Appendix D.

C. If the Absolute Revs value is other than zero, zero it using the F3 key.

D. Zero fixture load and torque cells using F5 and F8 keys respectively on the Motor Control Screen.

4.5.3 *Functional Test Run*

A. Verify the test area is clear of all nonessential personnel and all other cautions and/or warnings have been adhered to.

B. Record ambient conditions of temperature, humidity, and atmospheric pressure in Section 4.5.3 of Appendix D and verify within limits.

C. Start the data recording.

EMERGENCY MOTOR STOP

USE F7 TO STOP MOTOR MOVEMENT AT ANY TIME (MANUAL OR AUTO MOTOR MOVEMENT MODES)

D. Start the functional test by pressing F2 and record the start time in 4.5.3 of Appendix D.

E. At the completion of Cycle 0, verify the system is not in the User Input mode and press <CTRL><C> to exit the executable S/W and return to MS-DOS.

4.6 DATA VERIFICATION

NOTE: This section provides the steps for verifying the data is satisfactory following the functional test.

A. Transfer recorded data from the DACS to the Data Reduction Center.

B. Record the Max Loads and Max Torque values for each cycle in Section 4.6 of Appendix D.

C. Verify that the Max Loads and Max Torque values meet the requirements as defined in Section 3.2A of this document.

4.7 DACS SAFING AND POWER DOWN

A. Verify that the test data has been downloaded from the DACS to floppy disk and labeled per Appendix C.

B. Power off the DACS: (Only if no more testing is to be done)

(1) Power off the DACS Cabinet including the extender chassis and main chassis.

(2) Remove the QA version of the executable S/W.

(3) Power off the PC and motor control power supplies.

4.8 FUNCTIONAL TEST TEARDOWN

A. Verify that all power has been removed from the test setup.

CAUTION

USE EXTREME CARE WHEN HANDLING TEST ARTICLES. CLEAN WHITE COTTON GLOVES MUST BE WORN WHEN HANDLING TEST ARTICLES.

B. Remove the Test Article from the Functional Test Fixture (reference SK683-23504).

C. Perform an external visual inspection of the test article. Record any comments in Section 4.8 of Appendix D.

D. Package Test Article for shipment. All other hardware and equipment is to remain at the Functional Test Area.

NOTE: The Functional Test Fixture will remain in place. Only the PBN Test Article will be transported to the vibration area. If storage of the test articles is required, they will be stored in an appropriate DCA location.

4.9 INSTRUMENTATION AND TEST SET UP - CYCLE 0

4.9.1 *Setup*

NOTE: This section contains the steps for performance of the PBN Functional Test / Thermal Vac Test Instrumentation, Motor Control System, and Test Fixture setup. Perform this set up for initial Fixture configuration and for Fixture changes only. Software operation is defined in Appendix C.

A. Position the Thermal Vac Test Fixture Assembly, SK683-23620, in the planned test area. Record Fixture Assembly Part Number (P/N) and serial number (S/N) in Appendix D.

B. Install Test Support Equipment, (TSE), bolt and nut per SK683-23504.

C. Setup the PC Control and Instrumentation System per drawing SK683-23510.

D. Connect the cables from the PB Actuator to the power control rack per SK683-23510.

4.9.2 *Checkout*

A. Refer to Appendix ”C” for software operations.

B. Input / verify the calibration values for the fixture load and torque for the given Functional Fixture / Bolt. (Calibration values available from Calibration Data Sheets).

C. Power on the DACS and load the executable S/W. Record name and revision level of S/W in Appendix D.

(1) Set up and initialize DACS as applicable per Appendix C (reference C.10 through C.12).

(2) Open Bolt File Name and set Bolt information.

(3) Zero the fixture load.

(4) Apply compressive load to Fixture Load Cell, verify a negative reaction

(5) Apply the required precision shunt resistance (from Calibration Data Sheet) to the fixture load cell across - EXC and - SIG pins. Note, use the test points located on the Load Cell Cable at the back of the Test Rack, per SK683-23510.

(6) Verify the displayed value for the load is of the proper polarity and magnitude (Range = value from Calibration Data Sheet +200 lbs, - 100 lbs.).

(7) Remove the precision shunt resistance from the fixture load cell.

(8) Zero the torque offset.

(9) Manually apply a torque to the torque cell.

(10) Verify the displayed value for the given Fixture / Bolt is of proper polarity and magnitude for the torque cell measurement in comparison to Torque Cell Digital Display.

(11) Remove the applied torque from the torque cell.

(12) Zero load and torque offsets.

(13) Zero the Rev Positions.

(14) Verify the operation of Manual Motor Movement per Appendix C (C.14.B).

(15) Verify the operation of Emergency Motor Stop function.

(16) Verify the operation of Auto Motor Movement per Appendix C (C. 14.C).

(17) Verify that data was written to the DACS hard disk under the data file name input from above.

(18) Remove TSE Bolt and Nut from Test Fixture.

4.10 TEST ARTICLE SET UP

A. Acquire all equipment required for this section as specified in Appendix A. Record required equipment P/Ns and S/Ns in Appendix D. Verify that the DACS equipment is in calibration and record required calibration dates Appendix D.

CAUTION

USE EXTREME CARE WHEN HANDLING TEST ARTICLES. CLEAN WHITE COTTON GLOVES MUST BE WORN WHEN HANDLING TEST ARTICLES.

B. Record the Part Number (P/N) and Serial Number (S/N) of the Test Article in Section D.3.A of Appendix D.

C. Perform Bolt/Nut inspection and checkout per the following: (This step performs a visual inspection and thread engagement check of a Powered Bolt and Powered Bolt Nut prior to installation into the Functional or Thermal Vacuum Fixture.)

(1) Record the Part Number (P/N) and Serial Number (S/N) of the Test Article in Appendix D.

(2) If a Flight Powered Bolt is being tested with this Powered Bolt Nut, perform Powered Bolt inspection per D683-85130-7. If a Test Support Bolt is being used, go to next step.

(3) Record the P/N and S/N of the mating test article (Powered Bolt (PB) being used for this test.

(4) Install SK683-23656-1 Hub Assembly onto Powered Bolt motor drive flange using 683-13453 (or SK683-13453-1) Threaded Collar. Tighten Collar to hand tight only.

(5) Hand turn Hub Assy shaft in a clockwise direction. Hub should turn freely. Powered Bolt threads will start out of lower housing.

(6) Continue turning Hub for approximately 22 revs until Bolt is fully extended. Carefully inspect bolt threads for abnormalities, especially the thread lead.

(7) Remove Powered Bolt Nut from shipping container and packaging material. Perform visual inspection and record results in Appendix D.

(8) Use certified Thread Gage P/N Threadwell 5/8-18UNF3B to verify threads on Powered Bolt Nut. (NOTE: "Go" end of tool should thread in smoothly, do not use "No Go" end of tool for this test.) Record results in Appendix D.

(9) Align Powered Bolt Nut with Powered Bolt and hand turn in a clockwise direction as required to engage Bolt. Nut should turn freely.

(10) Continue turning approximately 7 turns (Do NOT allow Nut to make contact with the Bolt Housing). Note any visual abnormalities and/or turning resistance in Appendix D.

(11) Unthread Nut from Bolt in a counterclockwise direction. Note any visual abnormalities and/or turning resistance in Appendix D.

(12) Hand turn Hub Shaft in a counterclockwise direction to retract threaded bolt back into Powered Bolt Lower Housing. Continue turning Hub for approximately 23 revs until Bolt threads out of follower (Bolt will start to ratchet). Note any visual abnormalities and/or turning resistance in Appendix D.

(13) Remove Hub Assembly and Threaded Collar from Powered Bolt.

D. Center the encapsulated nut and washers within the cutout in the nut plate prior to installation in test fixture. Take care not to move encapsulated nut relative to nut plate during or after installation. Verify washers are not trapped between nut plate and Test fixture by taking a .01 inch shim to confirm that the nut plate is flush with the test fixture.

E. Install Test Article in the Test Fixture per SK683-23504.

F. Record the S/N of the mating test article Powered Bolt (PB) being used for this test in Appendix D.

G. Set gap between active and passive flanges (Range = .275 to .325 in.). Record flange gap in Section 4.4 of Appendix D.

H. Verify that the DACS is on and operational (reference Appendix C.10 through C.14.B).

I. Setup the Ambient Condition Monitor and verify the capability to monitor ambient temperature, relative humidity, and atmospheric pressure.

J. Set up Thermal monitoring per Appendix C.14.D.

4.11 FUNCTIONAL PERFORMANCE TEST

4.11.1 *Initial Setup*

A. Verify a PB and a PBN have been installed on the functional test fixture and instrumentation checkout completed.

B. Verify that Boeing Instrumentation and Test Operations personnel are ready to start test.

C. Record data in Appendix D.

4.11.2 *DACS Startup*

NOTE: A User's Guide to the manipulation of the executable S/W is located in Appendix C.

A. Verify that the DACS is on and operational.

B. Record Bolt and Nut Serial Numbers (SN's), Data File name in the appropriate Table in Appendix D.

C. Zero Absolute Revs per Appendix "C".

D. Zero fixture load and torque cells.

E. Verify Bolt info: Fixture #, Bolt SN, Start Cycle, End Cycle, Load Limit (lbs.), and Torque Limit (in-lbs.) for Cycle 0. Record values in Appendix D.

4.11.3 *Functional Test Run*

A. Verify the test area is clear of all nonessential personnel and all other cautions and/or warnings have been adhered to.

B. Record ambient conditions of temperature, humidity, and atmospheric pressure in Appendix D and verify within limits.

EMERGENCY MOTOR STOP

USE F9 TO STOP ALL MOTOR MOVEMENT AT ANY TIME (MANUAL OR AUTO MOTOR MOVEMENT MODES).

C. Start the functional test and record the start time in Appendix D.

D. At the completion of Cycle 0, verify all motors have stopped. If there is no additional testing required, exit the program per Appendix C.

4.12 DATA VERIFICATION

NOTE: This section provides the steps for verifying the data is satisfactory following the functional test.

A. Record the Max Loads and Max Torque values for each cycle in Appendix D.

B. Verify that the Max Loads and Max Torque values meet the requirements as defined in Section 3.2A of this document.

4.13 DACS SAFING AND POWER DOWN

NOTE: This section provides the steps for safing and powering down the DACS, if no further testing is required.

A. Verify that the test data has been downloaded from the DACS to floppy disk and the disk has been labeled per Appendix C.

B. Power off the DACS: (Only if no more testing is to be done)

(1) Power off the DACS Cabinet.

(2) Power off the PC and motor control power supplies.

4.14 FUNCTIONAL TEST TEARDOWN

NOTE: This Section contains the steps required to remove the test article(s) from the Functional Test Setup, if no additional testing is required.

A. Verify that all power has been removed from the test setup.

CAUTION

**USE EXTREME CARE WHEN HANDLING TEST ARTICLES.
CLEAN WHITE COTTON GLOVES MUST BE WORN
WHEN HANDLING TEST ARTICLES.**

B. Remove the Test Article from the Functional Test Fixture (reference SK683-23504).

C. Perform an external visual inspection of the test article. Record any comments in Appendix D.

D. Package the Test Article appropriately for the next test or for shipment.

NOTE: The Functional Test Fixture will remain in place. Only the PBN Test Article will be transported. If storage of the test articles is required, they will be stored in an appropriate DCA location.

4.14.1 PRE-THERMAL VACUUM VIBRATION TEST (OPTIONAL)

A Pre-Thermal Vacuum Vibration Test may be performed, as an option, at this time per section 6.15 in conjunction with the mating Powered Bolt Vibration Test (Reference D683-85130-7).

NOTE: Vibration Test Data will be recorded on the ”CYCLE 0 - 1ST VIB” Appendix D Data sheet.

4.15 INSTRUMENTATION AND TEST FIXTURE SETUP - CYCLE 1

This section of the document contains two setup procedures, if using test fixture SK683-13741, refer to sections 4.15.1 through 4.20, and if using test fixture SK683-23620 refer to sections 4.21 through 4.26. The data being collected is the same, therefore, the same data sheet sections will be used for both procedures.

4.15.1 *Setup*

NOTE: This section contains the steps for performance of the PBN Functional Test Instrumentation, Motor Control System, and Test Fixture setup. Software operation is defined in Appendix C.

A. Position the Functional Test Fixture Assembly, SK683-23504 or SK683-23620, in the planned test area. (SK683-13744 is allowable if functional tests are to be conducted inside the vacuum chamber.) Record Fixture Assy Part Number (P/N) and Serial Number (S/N) in Appendix D.

B. Connect the cables from the PB Actuator to the power control rack per SK683-23510.

C. Install Test Article in the Functional Test Fixture per SK683-23504.

D. Verify that a mating component (PB) is installed in the Functional Test Fixture per SK683-23504. Record the P/N and S/N in Appendix D.

E. Set gap between active and passive flanges (Range = .275 to .325 in.). Record flange gap in Appendix D.

F. Setup the Ambient Condition Monitor and verify the capability to monitor ambient temperature, relative humidity, and atmospheric pressure.

NOTE: The Test Setup required to support Functional Test Conduct has been completed. Functional Test Conduct may now be performed.

4.16 FUNCTIONAL PERFORMANCE TEST

4.16.1 *Initial Setup*

A. Verify a PB and a PBN have been installed on the functional test fixture and instrumentation checkout completed.

B. Verify that Boeing Instrumentation and Test Operations personnel are ready to start test.

4.16.2 *DACS Startup*

NOTE: A User's Guide to the manipulation of the executable S/W is located in Appendix C.

A. Verify that the DACS is on and operational.

B. On the Motor Control page, enter/verify the following parameters using the F1 key per the Test Conductor's direction (see Figure C-1):

(1) Bolt serial no.
Nut serial no.
test designation (AMB_FUN)
RPM (0)
torque and load limits (1600, 19300)
direction of travel (in)
no. of revs (0)
start and end cycles (1,1)
recording (off)
data file name (see note below)
control scenario (auto)
fixture load cal value (from cal data sheets)
torque cal value (from cal data sheets)

Note: Data file name will be as follows:
For PBN: PBNxxxxA - where xxxx is the SN of the PBN Assembly

NOTE: If both a Flight PB and PBN are being tested, the PB SN will be used.

(2) Record Bolt and Nut S/N's, Data File Name and Cal values in the appropriate Table in Appendix D.

C. If the Absolute Revs value is other than zero, zero it using the F3 key.

D. Zero fixture load and torque cells using F5 and F8 keys respectively on the Motor Control Screen.

4.16.3 *Functional Test Run*

A. Verify the test area is clear of all nonessential personnel and all other cautions and/or warnings have been adhered to.

B. Record ambient conditions of temperature and humidity in Appendix D and verify within limits.

C. Start the data recording.

EMERGENCY MOTOR STOP

USE F7 TO STOP MOTOR MOVEMENT AT ANY TIME (MANUAL OR AUTO MOTOR MOVEMENT MODES)

D. Start the functional test by pressing F2 and record the start time in Appendix D.

E. At the completion of Cycle 1, verify the system is not in the User Input mode and press <CTRL><C> to exit the executable S/W and return to MS-DOS.

4.17 DATA VERIFICATION

NOTE: This section provides the steps for verifying the data is satisfactory following the functional test.

A. Transfer recorded data from the DACS to the Data Reduction Center.

B. Record the Max Loads and Max Torque values for each cycle in Appendix D.

C. Verify that the Max Loads and Max Torque values meet the requirements as defined in Section 3.2A of this document.

4.18 DACS SAFING AND POWER DOWN

A. Verify that the test data has been downloaded from the DACS to floppy disk and labeled per Appendix C.

B. Power off the DACS: (Only if no more testing is to be done)

(1) Power off the DACS Cabinet including the extender chassis and main chassis.

(2) Power off the PC and motor control power supplies.

4.19 FUNCTIONAL TEST TEARDOWN

A. Verify that all power has been removed from the test setup.

CAUTION

USE EXTREME CARE WHEN HANDLING TEST ARTICLES. CLEAN WHITE COTTON GLOVES MUST BE WORN WHEN HANDLING TEST ARTICLES.

B. Remove the Test Article from the Functional Test Fixture (reference SK683-23504).

C. Perform an external visual inspection of the test article. Record any comments in Appendix D.

D. Package Test Article for shipment. All other hardware and equipment is to remain at the Functional Test Area.

NOTE: The Functional Test Fixture will remain in place. Only the PBN Test Article will be transported to the vibration area. If storage of the test articles is required, they will be stored in an appropriate DCA location.

4.20 INSTRUMENTATION AND TEST SET UP - CYCLE 1

4.20.1 *Setup*

A. Position the Thermal Vac Test Fixture Assembly, SK683-23620, in the planned test area. Record Fixture Assembly Part Number (P/N) and serial number (S/N) in Appendix D.

B. Setup the PC Control and Instrumentation System per drawing SK683-23510.

C. Connect the cables from the PB Actuator to the power control rack per SK683-23510.

4.21 TEST ARTICLE SET UP

A. Acquire all equipment required for this section as specified in Appendix A. Record required equipment P/Ns and S/Ns in Appendix D. Verify that the DACS equipment is in calibration and record required calibration dates Appendix D.

CAUTION

**USE EXTREME CARE WHEN HANDLING TEST ARTICLES.
CLEAN WHITE COTTON GLOVES MUST BE WORN
WHEN HANDLING TEST ARTICLES.**

B. Record the Part Number (P/N) and Serial Number (S/N) of the Test Article in Appendix D.

C. Center the encapsulated nut and washers within the cutout in the nut plate prior to installation in test fixture. Take care not to move encapsulated nut relative to nut plate during or after installation. Verify washers are not trapped between nut plate and Test fixture by taking a .01 inch shim to confirm that the nut plate is flush with the test fixture.

D. Install Test Article in the Test Fixture per SK683-23504.

E. Record the S/N of the mating test article Powered Bolt (PB) being used for this test in Appendix D.

F. Set gap between active and passive flanges (Range = .275 to .325 in.). Record flange gap in Appendix D.

G. Verify that the DACS is on and operational (reference Appendix C.10 through C.14.B).

H. Setup the Ambient Condition Monitor and verify the capability to monitor ambient temperature, relative humidity, and atmospheric pressure.

I. Set up Thermal monitoring per Appendix C.14.D.

4.22 FUNCTIONAL PERFORMANCE TEST

4.22.1 *Initial Setup*

A. Verify a PB and a PBN have been installed on the functional test fixture and instrumentation checkout completed.

B. Verify that Boeing Instrumentation and Test Operations personnel are ready to start test.

C. Record data in Appendix D.

4.22.2 *DACS Startup*

NOTE: A User's Guide to the manipulation of the executable S/W is located in Appendix C.

A. Verify that the DACS is on and operational.

B. Record Bolt and Nut Serial Numbers,(SN's), Data File name in the appropriate Table in Appendix D.

C. Zero Absolute Revs per Appendix C.

D. Zero fixture load and torque cells.

E. Verify Bolt info: Fixture #, Bolt SN, Start Cycle, End Cycle, Load Limit (lbs.), and Torque Limit (in-lbs.) for Cycle 1. Record values in Appendix D.

4.22.3 *Functional Test Run*

A. Verify the test area is clear of all nonessential personnel and all other cautions and/or warnings have been adhered to.

B. Record ambient conditions of temperature and humidity in Appendix D and verify within limits.

EMERGENCY MOTOR STOP

USE F9 TO STOP ALL MOTOR MOVEMENT AT ANY TIME (MANUAL OR AUTO MOTOR MOVEMENT MODES).

C. Start the functional test and record the start time in Appendix D.

D. At the completion of Cycle 1, verify all motors have stopped. If there is no additional testing required, exit the program per Appendix C.

4.23 DATA VERIFICATION

NOTE: This section provides the steps for verifying the data is satisfactory following the functional test.

A. Record the Max Loads and Max Torque values for each cycle in Appendix D.

B. Verify that the Max Loads and Max Torque values meet the requirements as defined in Section 3.2A of this document.

4.24 DACS SAFING AND POWER DOWN

NOTE: This section provides the steps for safing and powering down the DACS, if no further testing is required. If continuing on with thermal vacuum testing, proceed to Section 5.11.

A. Verify that the test data has been downloaded from the DACS to floppy disk and the disk has been labeled per Appendix C.

B. Power off the DACS: (Only if no more testing is to be done)

(1) Power off the DACS Cabinet.

(2) Power off the PC and motor control power supplies.

4.25 FUNCTIONAL TEST TEARDOWN

NOTE: This Section contains the steps required to remove the test article(s) from the Functional Test Setup, if no additional testing is required.

A. Verify that all power has been removed from the test setup.

CAUTION

**USE EXTREME CARE WHEN HANDLING TEST ARTICLES.
CLEAN WHITE COTTON GLOVES MUST BE WORN
WHEN HANDLING TEST ARTICLES.**

B. Remove the Test Article from the Functional Test Fixture (reference SK683-23504).

C. Perform an external visual inspection of the test article. Record any comments in Appendix D.

D. Package the Test Article appropriately for the next test or for shipment.

NOTE: The Functional Test Fixture will remain in place. Only the PBN Test Article will be transported. If storage of the test articles is required, they will be stored in an appropriate DCA location.

SECTION 5, VACUUM ACCEPTANCE TEST

5.1 GENERAL NOTES

A. This Section of the Test Procedure performs the Vacuum Acceptance Test on the PB.

B. All manual data recording and procedure step buyoffs are to be recorded in Appendix D.

C. Sections 5.2 and 5.3 are not required if the test fixture has already been checked out in its current location.

D. Section 8.1 has been added to retest reworked assemblies.

5.2 FACILITY READINESS

A. Record test area location in Section 5.2 of Appendix D.

5.3 INSTRUMENTATION AND TEST FIXTURE SETUP

This section of the document contains two setup procedures, if using test fixture SK683-13741, refer to sections 5.3.1 through 5.8, and if using test fixture SK683-23620 refer to sections 5.9 through 5.13.

5.3.1 *Setup*

NOTE: This section contains the steps for performance of the PBN Test Instrumentation, Motor Control System, and Test Fixture setup. Software operation is defined in Appendix C.

A. Position the Vacuum Test Fixture Assembly, SK683-23620 or SK683-13744, in the vacuum chamber. Boeing personnel follow the safety guidelines below:

(1) Verify safety signs at all entrances.

(2) Verify ropes at appropriate hall doors, shop offices, and front entrances.

(3) Verify Boeing personnel involved in the operation are wearing hard hats if a crane is used.

WARNING

PERSONNEL PARTICIPATING IN THE ALCOHOL CLEANING OF THE TEST FIXTURE WILL ENSURE THE FOLLOWING:
A.<tok_Tab>PROPER VENTILATION IS AVAILABLE.
B.<tok_Tab>NO IGNITION SOURCES ARE PRESENT.
C.<tok_Tab>O2 MONITOR

(4) Clean the test fixture with 200 proof de-natured alcohol. Install the Test Fixture Assembly in the vacuum chamber.

B. Setup the PC Control System per drawing SK683-23510.

C. Setup the Control and Data Configuration per drawing SK683-23510.

D. Connect the cables from the actuator to the power control rack per SK683-23510.

E. Install TSE Bolt and Nut for Test Setup Checkout per SK683-23504.

5.3.2 *Checkout*

A. Power on the DACS and load the executable S/W.

B. Input the calibration values for the fixture load and torque on the Motor Control Screen.

C. Zero the fixture load offset using the F8 key on the Motor Control Screen.

D. Apply the required precision shunt resistance (from Calibration Data Sheet) to the fixture load cell across - EXC and - SIG pins..

E. Verify the displayed value for the load is of proper polarity and amount (Range = value from Calibration Data Sheet +/- 100 lbs.). Record Fixture Load reading in Section 5.3.2 of Appendix D.

F. Remove the precision resistance from the fixture load cell.

G. Verify the calibration value for the torque cell has been loaded and verify proper values on the Motor Control Screen

H. Zero the torque offset using the F5 key on the Motor Control Screen.

I. Manually apply a torque to the torque cell.

J. Verify the displayed value on the Motor Control Screen is of proper polarity and amount for the torque cell measurement in comparison to Torque Cell Digital Display.

K. Remove the applied torque from the torque cell.

L. Zero load and torque offsets using the F5 and F8 keys on the Motor Control Screen.

M. Zero the Rev Positions using the F3 key on the Motor Control Screen.

N. Enter a Data File Name on the Motor Control Screen.

O. Verify the operation of Manual Motor Movement per Appendix C.

P. Verify the operation of Auto Motor Movement per Appendix C.

Q. Verify the operation of Emergency Motor Stop function using F7.

R. Verify that data was written to the DACS hard disk under the file name entered above.

S. Remove TSE Bolt and Nut upon completion of Test Setup Checkout.

5.4 TEST ARTICLE SETUP

NOTE: This section contains the steps for performance of the PBN Test Article and Vacuum Fixture test setup.

A. Acquire all equipment required for this section as specified in Appendix A. Record required P/Ns and S/Ns in Section 5.4 of Appendix D for the specified equipment.

CAUTION

USE EXTREME CARE WHEN HANDLING QUALIFICATION TEST ARTICLES. CLEAN WHITE COTTON GLOVES MUST BE WORN WHEN HANDLING QUALIFICATION TEST ARTICLES.

B. Record Fixture Assembly P/N and S/N in Section 5.4 of Appendix D.

C. Record the S/N of the Test Article in Section 5.4 of Appendix D.

D. Center the encapsulated nut and washers within the cutout in the nut plate prior to installation in test fixture. Take care not to move encapsulated nut relative to nut plate during or after installation. Verify washers are not trapped between nut plate

and Test fixture by taking a .01 inch shim to confirm that the nut plate is flush with the test fixture.

E. Install the Test Article on the Test Fixture per SK683-23504.

F. Record the P/N and S/N of the mating component (PB) being used for this test in Section 5.4 of Appendix D.

G. Set gap between active and passive flanges (Range = .275 to .325 in.). Record flange gap in Section 5.4 of Appendix D.

H. Verify that the DACS is on and operational.

5.5 VACUUM FUNCTIONAL TEST

5.5.1 *Test Conduct*

NOTE: This section provides the steps for running the Vacuum test.

A. Prepare DACS for chamber depressurization as follows:

(1) Power down and/or disconnect power to transducers.

(2) Power down and/or disconnect power to heaters

(3) Power down and/or disconnect power to lights/lamps inside chamber.

B. Reduce chamber pressure to a maximum of $1x10^{-4}$ Torr. Record start time and time that chamber reaches $1x10^{-4}$ Torr in Section 5.5.1 of Appendix D.

NOTE: The following cycles (Cycles 2-21) should be completed within 6 hours after reaching a vacuum of $1x10^{-4}$ Torr.

C. On the Motor Control page, enter/verify the following parameters using the F1 key per the Test Conductor's direction (see Figure C-1):

(1) Bolt serial no.
Nut serial no.
test designation (Vacuum)
RPM (0)
torque and load limits (1600, 19300)
direction of travel (in)
no. of revs (0)
start and end cycles (2,21)
recording (off)
data file name (see note below)
control scenario (auto)
fixture load cal value (from cal data sheet)
torque cal value (from cal data sheet)

Note: Data file name will be as follows:
For PB: PBxxxxA - where xxxx is the SN of the PB Assembly

NOTE: If both a Flight PB and PBN are being tested, the PB SN will be used.

(2) Record Bolt and Nut S/Ns, Data File Name and Cal Values in the appropriate Table in Section 5.5.1 of Appendix D.

D. If required, zero fixture load and torque cells using F5 and F8 keys respectively on the Motor Control Screen.

E. At the completion of cycle 21, exit DACS program. Transfer recorded data to Data Reduction Center. Record Max Load and Max Torque values for each cycle in Section5.5.1 of Appendix D. Verify data is satisfactory per Section 3.2, step A. Verify data is satisfactory (cycles 17 through 21) to continue testing per Section 3.2, step B.

NOTE: The temperature of the bolt housing will be taken from thermocouples Tx001 (primary) and Tx002 (backup), where the 'x' is the position number of the fixture (the SK683-13744 fixture will use 0 (zero) for the position number). If Tx001 fails during test, record its temperature as Non-Op and continue using Tx002.

F. Start thermal conditioning of active and passive flange as follows:

(1) Start LN2 flow to chamber shrouds (MSFC operation), set cooling cart control to -150F, set flange heater controls to -60F and allow test setup to cool until bolt housing thermocouple (Tx001) reaches -30F. Record cooling start time and time Bolt Housing temperature reaches -30F in Section 5.5.1 of Appendix D.

(2) If needed, allow setup to continue cooling until passive flange temperature (Tx003) reaches -40F. Maintain Bolt Housing temperature at or below -30F during this period.

(3) When both temperatures are achieved (Tx001 at or below -30F and Tx003 at or below -40F), allow setup to soak for minimum of 1 hour (Maintain temperatures at or below their respective levels). Record soak period start and end times and final Bolt Housing Temperature(s) in Section 5.5.1 of Appendix D.

G. After soak time is complete, setup to cycle bolt one cycle (cycle 22) as follows:

(1) Bolt serial no.
Nut serial no.
test designation (Vacuum)
RPM (0)
torque and load limits (1600, 19300)
direction of travel (in)
no. of revs (0)
start and end cycles (22,22)
recording (off)
data file name (see note below)
control scenario (auto)
fixture load cal value (from cal data sheet)
torque cal value (from cal data sheet)

Note: Data file name will be as follows:
For PB: PBxxxxA - where xxxx is the SN of the PB Assembly

NOTE: If both a Flight PB and PBN are being tested, the PB SN will be used.

(2) Record Bolt and Nut S/Ns, Data File Name and Cal Values in the appropriate Table in Section 5.5.1 of Appendix D.

H. If required, zero fixture load and torque cells using F5 and F8 keys respectively on the Motor Control Screen.

I. Cycle the test article one cycle.

J. At the completion of cycle 22, verify data is acceptable to continue testing per Section 3.2A. Record Max Load and Max Torque values for each cycle in Section 5.5.1 of Appendix D.

K. Verify that the data is acceptable to continue testing per Section 3.2C. Record values in Section 5.5.1 of Appendix D.

L. Start thermal conditioning to hot case as follows:

(1) Stop LN2 Flow to chamber shrouds and purge with warm air (+70F +/-20F) (MSFC operation), set cooling cart controls to +180F, set heaters controls to +150 and allow test setup to warm until bolt housing temperature reaches +120F. Record warming start time and time Bolt housing reaches +120F in Section 5.5.1 of Appendix D.

(2) When Tx001 reaches +120F, reduce active flange heaters to +120F. If needed, allow setup to continue heating until passive flange temperature (Tx003) reaches +130F. Maintain bolt housing temperature at or above +120F during this period.

(3) When both temperatures are achieved (Tx001 at or above +120F and Tx003 at or above +130F), set cooling cart to +120F, set active heaters to +120F, passive flange heaters to +130F and allow to soak for minimum of 1 hour (Maintain temperatures at or above their respective levels). Record soak start time, soak end time and final Bolt Housing Temperature in Section 5.5.1 of Appendix D.

M. When soak time has been completed, setup to cycle bolt one cycles (cycle 23) as follows:

(1) Bolt serial no.
Nut serial no.
test designation (Vacuum)
RPM (0)
torque and load limits (1600, 19300)
direction of travel (in)
no. of revs (0)
start and end cycles (23,23)
recording (off)
data file name (see note below)
control scenario (auto)
fixture load cal value (from cal data sheet)
torque cal value (from cal data sheet)

Note: Data file name will be as follows:
For PB: PBxxxxA - where xxxx is the SN of the PB Assembly

NOTE: If both a Flight PB and PBN are being tested, the PB SN will be used.

(2) Record Bolt and Nut S/Ns, Data File Name and Cal Values in the appropriate Table in Section 5.5.1 of Appendix D.

N. If required, zero fixture load and torque cells using F5 and F8 keys respectively on the Motor Control Screen.

O. Cycle the test article one cycle.

P. At the completion of cycle 23, verify data is acceptable to continue testing per Section 3.2A. Record Max Load and Max Torque values for each cycle in Section 5.5.1 of Appendix D.

Q. Return both bolt and nut flanges to ambient temperature as follows:

(1) Set cooling cart controls to -150F and set heater controls to +30F. Allow setup to cool until bolt housing temperature reaches +70F. Record cooling start time and time bolt housing reaches +70F in Section 5.5.1 of Appendix D.

(2) When Tx001 reaches +70F, set active flange heaters to +65F. If needed, allow setup to continue cooling until passive flange temperature (Tx003) reaches +70F. Maintain bolt housing temperature between +55F and +75F during this period.

(3) When both temperatures are achieved (Tx001 and Tx003 are between +55F and +75F), set cooling cart to +30F and heaters to +65F. Allow to soak to a minimum of 1 hour (Maintain temperatures between +50F and +75F) Record

soak period start time, soak end time and final Bolt Housing Temperature in Section 5.5.1 of Appendix D.

R. When soak period has expired, setup to cycle bolt one cycle (cycle 24) as follows:

(1) Bolt serial no.
Nut serial no.
test designation (Vacuum)
RPM (0)
torque and load limits (1600, 19300)
direction of travel (in)
no. of revs (0)
start and end cycles (24,24)
recording (off)
data file name (see note below)
control scenario (auto)
fixture load cal value (from cal data sheet)
torque cal value (from cal data sheet)

Note: Data file name will be as follows:
For PB: PBxxxxA - where xxxx is the SN of the PB Assembly

NOTE: If both a Flight PB and PBN are being tested, the PB SN will be used.

(2) Record Bolt and Nut S/Ns, Data File Name and Cal Values in the appropriate Table in Section 5.5.1 of Appendix D.

S. If required, zero fixture load and torque cells using F5 and F8 keys respectively on the Motor Control Screen.

T. Cycle the test article one cycle.

U. At the completion of cycle 24, verify data is acceptable to continue testing per Section 3.2A. Record Max Load and Max Torque values for each cycle in Section 5.5.1 of Appendix D.

V. Verify that the data is acceptable to continue testing per Section 3.2C. Record values in Section 5.5.1 of Appendix D.

W. Configure instrumentation for chamber repressurization as follows:

(1) Power down and/or disconnect power to transducers.

(2) Power down and/or disconnect power to heaters

(3) Power down and/or disconnect power to lights/lamps inside chamber.

X. Bring chamber up to ambient pressure and open the chamber door.

Y. Verify the system is not in the User Input mode and press <CTRL><C> to exit the executable S/W and return to MS-DOS.

5.6 DATA VERIFICATION

A. Transfer recorded data from DACS to Data Reduction Center.

B. Verify that the Max fixture Load and Max Torque values for each cycle are recorded in Section 5.5.1 of Appendix D.

C. Transfer all electronically recorded data for this test article to a floppy disk. Label, handle, and transport the data to QA records per Appendix C. Record in Section 5.6 of Appendix D.

5.7 DACS SAFING AND POWER DOWN

NOTE: This section provides the steps for safing and powering down the DACS, if required.

A. Verify that the test data has been downloaded from the DACS to floppy disk ad the disk has been labeled per Appendix C..

B. Power off the DACS:

(1) Power off the DACS Cabinet including the extender chassis and main chassis.

(2) Remove the QA version of the executable S/W.

(3) Power off the PC and motor control power supplies.

C. Record data in Section 5.7 of Appendix D.

5.8 VACUUM TEST TEARDOWN

NOTE: This Section contains the steps required to remove the test article(s) from the Vacuum Test Setup.

A. Verify that all power has been removed from the test setup.

CAUTION

USE EXTREME CARE WHEN HANDLING TEST ARTICLES. CLEAN WHITE COTTON GLOVES MUST BE WORN WHEN HANDLING TEST ARTICLES.

B. Disconnect the PB Load Cell data cable from the DACS (reference SK683-23510). Install protective cap over connector end.

C. Remove thermocouples from bolt housing (ref SK683-23510).

D. Remove the Test Article from the Vacuum Test Fixture (reference SK683-23504).

E. Perform an external visual inspection of the test article(s). Record any comments in Section 5.8 of Appendix D.

NOTE: The Test Teardown required following Vacuum Test Conduct has been completed.

5.9 INSTRUMENTATION AND TEST FIXTURE SET UP

5.9.1 *Setup*

A. Record facility location of vacuum chamber in Section 5.2 of Appendix D.

NOTE: This section contains the steps for performance of the PB Functional Test / Thermal Vac Test Instrumentation, Motor Control System, and Test Fixture setup. Perform this set up for initial Fixture configuration and for Fixture changes only. Software operation is defined in Appendix C.

B. Position the Thermal Vac Test Fixture Assembly, SK683-23620, in the planned test area. Record Fixture Assembly Part Number (P/N) and serial number (S/N) in Appendix D.

C. Install Test Support Equipment (TSE), bolt and nut per SK683-23504.

D. Setup the PC Control and Instrumentation System per drawing SK683-23510.

E. Connect the cables from the PB Actuator to the power control rack per SK683-23510.

5.9.2 *Checkout*

A. Refer to Appendix C for software operations.

B. Input / verify the calibration values for the fixture load and torque for the given Functional Fixture / Bolt. (Calibration values available from Calibration Data Sheets).

C. Power on the DACS and load the executable S/W. Record name and revision level of S/W in Appendix D.

(1) Set up and initialize DACS as applicable per Appendix C.

(2) Open Bolt File Name and set Bolt information.

(3) Zero the fixture load.

(4) Apply compressive load to Fixture Load Cell, verify a negative reaction

(5) Apply the required precision shunt resistance (from Calibration Data Sheet) to the fixture load cell across - EXC and - SIG pins. Note, use the test points located on the Load Cell Cable at the back of the Test Rack, per SK683-23510.

(6) Verify the displayed value for the load is of the proper polarity and magnitude (Range = value from Calibration Data Sheet +/- 100 lbs.). Record Fixture load reading in Appendix D.

(7) Remove the precision shunt resistance from the fixture load cell.

(8) Zero the torque offset.

(9) Manually apply a torque to the torque cell.

(10) Verify the displayed value for the given Fixture / Bolt is of proper polarity and magnitude for the torque cell measurement in comparison to Torque Cell Digital Display.

(11) Remove the applied torque from the torque cell.

(12) Zero load and torque offsets.

(13) Zero the Rev Positions.

(14) Verify the operation of Manual Motor Movement per Appendix C.

(15) Verify the operation of Auto Motor Movement per Appendix C.

(16) Verify the operation of Emergency Motor Stop function.

(17) Verify that data was written to the DACS hard disk under the data file name input from above.

(18) Remove TSE Bolt and Nut from Test Fixture.

5.10 TEST ARTICLE SET UP

A. Acquire all equipment required for this section as specified in Appendix A. Record required equipment P/Ns and S/Ns in Appendix D. Verify that the DACS equipment is in calibration and record required calibration dates in Appendix D.

CAUTION

**USE EXTREME CARE WHEN HANDLING TEST ARTICLES.
CLEAN WHITE COTTON GLOVES MUST BE WORN
WHEN HANDLING TEST ARTICLES.**

B. Record the Part Number (P/N) and Serial Number (S/N) of the Test Article in Appendix D.

C. Center the encapsulated nut and washers within the cutout in the nut plate prior to installation in test fixture. Take care not to move encapsulated nut relative to nut plate during or after installation. Verify washers are not trapped between nut plate

and Test fixture by taking a .01 inch shim to confirm that the nut plate is flush with the test fixture.

D. Install Test Article in the Test Fixture per SK683-23504.

E. Record the P/N and S/N of the mating test article (Powered Bolt (PB) being used for this test in Appendix D.

F. Set gap between active and passive flanges (Range = .275 to .325 in.). Record flange gap in Appendix D.

G. Verify that the DACS is on and operational (reference Appendix C.10 through C.14.B).

5.11 VACUUM FUNCTIONAL TEST

5.11.1 *Initial setup*

A. Verify that a PB and a PBN have been installed on the vacuum test fixture and instrumentation checkout completed.

B. Verify that Boeing Instrumentation and Test Operations personnel are ready to start test.

C. Clear test area of all nonessential personnel.

WARNING

PERSONNEL PARTICIPATING IN THE ALCOHOL CLEANING OF THE TEST FIXTURE WILL ENSURE THE FOLLOWING:
A.<tok_Tab>PROPER VENTILATION IS AVAILABLE.
B.<tok_Tab>NO IGNITION SOURCES ARE PRESENT.
C.<tok_Tab>AN 02 MONITOR IS ON AND OPERATIONAL.

D. Clean the test fixture with 200 proof de-natured alcohol and secure chamber.

5.11.2 *DACS Startup*

NOTES: If Functional Test (Cycle 1) has just been completed and DACS is still on and operational, proceed to Section 5.11.3.

A User's Guide to the manipulation of the executable S/W is located in Appendix C.

A. Verify that the DACS is on and operational (reference steps in Appendix C.10 through C.14.B).

5.11.3 *Test Conduct*

NOTE: This section provides the steps for running the Vacuum test.

EMERGENCY MOTOR STOP

USE F9 TO STOP ALL MOTOR MOVEMENT AT ANY TIME (MANUAL OR AUTO MOTOR MOVEMENT MODES)

A. Program Tenney Thermal Conditioning Unit as follows:

NOTE: This program defines the operational parameters for the test profile. The program will be held by the operator at each plateau as required to meet the specified temperature conditions. Adjustments to the program temperatures, once in hold, can be made by the operator to meet specified temperatures.

(1)	Segment 1	Hold at 70F degrees (21.1C) for 2 minutes.	
(2)	Segment 2	Ramp from 70F degrees (21.1C) to -100F degrees	(-73.3C) in 35
(3)	Segment 3	Hold at -100F degrees (-73.3C) for 121 minutes (2 hours, 1 minute).	
(4)	Segment 4	Ramp from -100F degrees (-73.3C) to -64F degrees	(-53.3C) in 16
(5)	Segment 5	Hold at -64F degrees (-53.3C) for 10 minutes.	
(6)	Segment 6	Ramp from -64F degrees (-53.3C) to +190F degrees (87.8C) in 60 minutes.	
(7)	Segment 7	Hold at +190F degrees (87.8C) for 125 minutes. (2 hours, 5 minutes)	
(8)	Segment 8	Ramp from +190F degrees (87.8C) to +151F degrees (66.0C) in 11 minutes.	

(9)	Segment 9	Hold at +151F degrees (66.0C) for 60 minutes.
(10)	Segment 10	Ramp from +151F degrees (66.0C) to +55F degrees (12.8C) in 25 minutes.
(11)	Segment 11	Hold at +55F degrees (12.8C) for 60 minutes.
(12)	Segment 12	Ramp from +55F degrees (12.8C) to +65F degrees (18.3C) in 6 minutes.
(13)	Segment 13	Hold at +65F degrees (18.3C) for 60 minutes.

B. Set Tenney for temperature alarm at -110F degrees (-78.8C) and low temperature shutdown at -120F degrees (-84.4C).

C. Set Tenney high temperature alarm at +200.0F degrees (93.3C) and high temperature shutdown at +210.0F degrees (98.9C).

NOTE: Should set points for the Tenney temperatures in this procedure require changing to meet test article temperature requirements, adjust low and high alarms and shutdowns as required. Alarms should be set 10.0F degrees lower or higher than the respective set points. Shutdowns should be set 15.0F degrees lower or higher than the respective set points.

NOTE: Use of conductively cooled shrouds and Multi-Layered Insulation (MLI) may be required on certain parts of the test fixture to enable required thermal conditions to be achieved. Verify that such use will not interfere with normal function of the Powered Bolt.

D. Record the programming of the Thermal Conditioning Unit in Appendix D.

E. Start Tenney Thermal Conditioning Unit, and hold at +70.0F degrees (21.1C).

F. Power off the Motor Control power supplies.

G. Reduce chamber pressure to a maximum of $1x10^{-4}$ Torr. Record start time and time that chamber reaches $1x10^{-4}$ Torr in Appendix D.

H. Verify that Tenney is maintaining temperature at 70F (21.1C) +/- 5F degrees.

NOTE: The temperature of the Bolt housing will be taken from thermocouples Tx001. The temperature of the Bolt flange will be taken from thermocouple Tx002. The temperature of the Nut will be taken from thermocouple Tx003. The temperature of Nut flange will be taken from Tx004. In all cases the ”x” is the position number of the fixture.

I. When vacuum chamber is at $1x10^{-4}$ Torr, power on the DACS and load the executable S/W per the following:

(1) Turn on Motor Control power supplies.

(2) Set up and initialize DACS as applicable per Appendix C, if required.

(3) Open Set Bolt Info and set Bolt information for cycles 2 thru 21.

(4) Zero the fixture load.

(5) Zero the torque offset.

(6) Zero the Rev Positions, if required.

(7) Repeat steps 3 thru 6 for all bolts setup for test.

NOTE: The following cycles (Cycles 2-21) should be completed within 6 hours after reaching a vacuum of $1x10^{-4}$ Torr.

J. Start the Thermal Vac Test, cycles 2-21, and record the start time in Appendix D.

K. Record the Max Loads and Max Torque values for each cycle in Appendix D.

L. Following the completion of cycles 2-21, record the stop time in Appendix D.

M. Verify the requirements as defined in Section 3.2A and 3.2B of this document and record in Appendix D.

N. Start cold Thermal Conditioning of Active and Passive flanges per the following. (Record start time in Appendix D):

NOTE: The temperature of the Bolt housing will be taken from thermocouples Tx001. The temperature of the Bolt flange will be taken from thermocouple Tx002. The temperature of the Nut will be taken from thermocouple Tx003. The temperature of Nut flange will be taken from Tx004. In all cases the ”x” is the position number of the fixture.

(1) Start segment 2 of the Thermal Control Profile (Ref. step 5.11.3A).

(2) Put unit on hold at completion of ramp (Segment 3, Ref. step 5.11.3A).

(3) Allow the Bolt housing and Nut to cool until both are below -30.0F degrees (-34.4C) (Thermocouples Tx001 and Tx003). Bolt housing may go lower than -45F while nut is cooling to -30F. Run Segment 4 of Thermal Control Profile to trim temperatures once bolt housing goes below -45F.

(4) Soak Test article for a minimum of 1 hour at -30F degrees. Maintain Test Article temperatures within the following tolerances:

Bolt Housing	-30F	(+0F, -15F)
Nut	-30F	(+0F, no negative tolerance)

O. Run 1 cycle, cycle number 22, record start time in Appendix D.

P. Following the completion of cycle 22, record the stop time in Appendix D.

Q. Verify the requirements as defined in Section 3.2A of this document have been met.

R. Start hot Thermal Conditioning of Active and Passive flanges per the following (Record start time in Appendix D):

NOTE: The temperature of the Bolt housing will be taken from thermocouples Tx001. The temperature of the Bolt flange will be taken from thermocouple Tx002. The temperature of the Nut will be taken from thermocouple Tx003. The temperature of Nut flange will be taken from Tx004. In all cases the ”x” is the position number of the fixture.

(1) Start segment 6 of the Thermal Control Profile (Ref. step 5.11.3A).

(2) Put unit on hold at completion of ramp (Segment 7, Ref. step 5.11.3A).

(3) Allow the Bolt Housing and Nut to warm to +120.0F degrees (Thermocouple Tx001 and Tx003). Bolt housing may go higher than +135F while nut is warming to +120F. Run Segment 8 of Thermal Control profile once bolt housing exceeds +135F.

(4) Soak Test article for a minimum of 1 hour at +120.0F degrees. Maintain Test Article temperatures within the following tolerances:

Bolt Housing	+120F	(-0F, +15F)
Nut	+120F	(-0F, no positive tolerance)

S. Run 1 cycle, cycle number 23, record start time in Appendix D.

T. Following the completion of cycle 23, record the stop time in Appendix D.

U. Verify the requirements as defined in Section 3.2A of this document have been met.

V. Start ambient Thermal Conditioning of Active and Passive flanges per the following. (Record start time in Appendix D):

NOTE: The temperature of the Bolt housing will be taken from thermocouples Tx001. The temperature of the Bolt flange will be taken from thermocouple Tx002. The temperature of the Nut will be taken from thermocouple Tx003. The temperature of Nut flange will be taken from Tx004. In all cases the ”x” is the

position number of the fixture.

(1) Start segment 10 of the Thermal Control Profile (Ref. step 5.11.3A).

(2) Put unit on hold at completion of ramp (Segment 11, Ref. step 5.11.3A).

(3) Allow the Bolt housing and Nut to cool to +70.0F degrees (Thermocouple Tx001 and Tx003). Once the nuts reach +75F, start Segment 12 of Thermal Control Profile (Ref. step 5.11.3A).

(4) Soak Test article for a minimum of 1 hour at +65.0F +/- 10.0F degrees.

W. Run 1 cycle, cycle number 24, record start time in Appendix D.

X. Following the completion of cycle 24, record the stop time in Appendix D.

5.12 DATA VERIFICATION

NOTE: This section provides the steps for verifying the data is satisfactory following the functional test.

A. Verify that the Max Loads and Max Torque values meet the requirements as defined in Section 3.2A of this document. Record in Appendix D.

B. Transfer all data to disk and label. Record in Appendix D.

5.13 THERMAL VACUUM TEST TEARDOWN

NOTE: This Section contains the steps required to remove the test article(s) from the Functional Test Setup, if no additional testing is required.

A. Verify that all power has been removed from the motor control power supplies. Record in Appendix D.

B. Bring chamber up to ambient pressure and open the chamber door.

CAUTION

USE EXTREME CARE WHEN HANDLING TEST ARTICLES. CLEAN WHITE COTTON GLOVES MUST BE WORN WHEN HANDLING TEST ARTICLES.

C. Verify power for DACS is off.

D. Disconnect the PB Load Cell data cable from the DACS (reference SK683-23510). Install protective cap over connector end.

E. Remove the Test Article from the Functional Test Fixture (reference SK683-23504).

F. Perform an external visual inspection of the test article. Record any comments in Appendix D.

G. Package the Test Article appropriately for the next test or for shipment.

NOTE: The Functional Test Fixture will remain in place. Only the PB Test Article will be transported. If storage of the test articles is required, they will be stored in an appropriate DCA location.

SECTION 6, VIBRATION/VIBROACOUSTIC TEST

The Powered Bolt Nut will be tested Functionally, Post Trim / Pre Vibe, (Cycle number 25) prior to the Vibration / Vibroacoustic Test. The Powered Bolt Nut assemblies will be tested in either a 3 axis random vibration test per Sections 6.15.1 through 6.15.9 or in a vibroacoustic test per Sections 6.16 through 6.18.3. The Post Test Functional Test, Cycles number 26-28 (Section 6.19) will be run after the vibration or vibroacoustic test.

6.1 GENERAL NOTES - VIBRATION TEST

The following general notes/guidelines are applicable to the first Vibration Test.

A. This section may be run in place of the Vibroacoustic section (Sections 6.16 through 6.18.3). Only one of these tests needs to be performed to accept a PBN Assembly.

B. This section has been written to support performance of the Vibration Test on the PBN Test Article after the 25th Functional Test. If more than one test articles (i.e. two PBs and/or two Nuts) are to be vibration tested, then they must have been functionally tested prior to this section.

C. All data recording and procedure step buyoffs will be recorded in Appendix D. If more than one test article is being tested, data must be recorded in each test articles' Appendix D.

D. The PBN will not be preloaded during the vibration test.

E. This section has been written to support performance of the Axial Direction Vibration Test first.

F. The Vibration Test will be performed in MSFC Building 4619 Room 147, or equivalent, utilizing Vertical and Horizontal Vibration tables.

6.2 FACILITY READINESS

A. Record test area location in Section 6.3 of Appendix D.

B. Verify that the planned accelerometer meets applicable calibration certification requirements.

6.3 POST TRIM / PRE VIBE FUNCTIONAL TEST

This section of the document contains two setup procedures for the Post Trim/ Pre Vibe Functional Test, if using test fixture SK683-13741, refer to sections 6.3.1 through 6.8, and if using test fixture SK683-23620 refer to sections 6.9 through 6.14.

6.3.1 *Setup*

NOTE: This section contains the steps for performance of the PBN Functional Test Instrumentation, Motor Control System, and Test Fixture setup. Software operation is defined in Appendix C.

A. Position the Functional Test Fixture Assembly, SK683-23504 or SK683-23620, in the planned test area. (SK683-13744 is allowable if functional tests are to be conducted inside the vacuum chamber.) Record Fixture Assy Part Number (P/N) and Serial Number (S/N) in Section 6.3.1 of Appendix D.

B. Setup the PC Control and Instrumentation System per drawing SK683-23510.

C. Connect the cables from the PB Actuator to the power control rack per SK683-23510.

6.3.2 *Checkout*

A. Power on the DACS and load the executable S/W. Record name and revision level of S/W in Section 6.3.2 of Appendix D.

B. Input the calibration values for the fixture load and torque on the Motor Control Screen. (Calibration values available from Calibration Data Sheets).

C. Zero the fixture load offset using the F8 key on the Motor Control Screen.

D. Apply the required precision shunt resistance (from Calibration Data Sheet) to the fixture load cell across - EXC and - SIG pins.

E. Verify the displayed value for the load is of proper polarity and amount (Range = value from Calibration Data Sheet +/- 100 lbs.). Record Fixture load reading in Section 6.3.2 of Appendix D.

F. Remove the precision resistance from the fixture load cell.

G. Verify the calibration value for the torque cell has been loaded and verify proper values on the Motor Control Screen

H. Zero the torque offset using the F5 key on the Motor Control Screen.

I. Manually apply a torque to the torque cell.

J. Verify the displayed value on the Motor Control Screen is of proper polarity and amount for the torque cell measurement in comparison to Torque Cell Digital Display.

K. Remove the applied torque from the torque cell.

L. Zero load and torque offsets using the F5 and F8 keys on the Motor Control Screen.

M. Zero the Rev Positions using the F3 key on the Motor Control Screen.

N. Enter a Data File Name on the Motor Control Screen.

O. Verify the operation of Manual Motor Movement per Appendix C.

P. Verify the operation of Auto Motor Movement per Appendix C.

Q. Verify the operation of Emergency Motor Stop function using F7.

R. Verify that data was written to the DACS hard disk under the name input from above.

S. Per Test Conductor (TC) direction power down the DACS, if required.

6.4 TEST ARTICLE SETUP

A. Acquire all equipment required for this section as specified in Appendix A. Record required equipment P/Ns and S/Ns in Section 6.3.1 of Appendix D. Verify that the DACS equipment is in calibration and record required calibration dates in Section 6.4 Appendix D.

CAUTION

**USE EXTREME CARE WHEN HANDLING TEST ARTICLES.
CLEAN WHITE COTTON GLOVES MUST BE WORN
WHEN HANDLING TEST ARTICLES.**

B. Record the Part Number (P/N) and Serial Number (S/N) of the Test Article in Section 6.4 of Appendix D.

C. Center the encapsulated nut and washers within the cutout in the nut plate prior to installation in test fixture. Take care not to move encapsulated nut relative to nut plate during or after installation. Verify washers are not trapped between nut plate and Test fixture by taking a .01 inch shim to confirm that the nut plate is flush with the test fixture.

D. Install Test Article in the Functional Test Fixture per SK683-23504.

E. Record the P/N and S/N of the mating test article (PB) being used for this test in Section 6.4 of Appendix D.

F. Set gap between active and passive flanges (Range = .275 to .325 in.). Record flange gap in Section 6.4 of Appendix D.

G. Setup the Ambient Condition Monitor and verify the capability to monitor ambient temperature, relative humidity, and atmospheric pressure.

NOTE: The Test Setup required to support Functional Test Conduct has been completed. Functional Test Conduct may now be performed.

6.5 FUNCTIONAL PERFORMANCE TEST

6.5.1 *Initial Setup*

A. Verify a PB and a PBN have been installed on the functional test fixture per SK683-23504 and instrumentation checkout completed. Record in Appendix D.

B. Verify that Boeing Instrumentation and Test Operations personnel are ready to start test. Record in Section 6.5.1. of Appendix D.

6.5.2 *DACS Startup*

NOTE: A User's Guide to the manipulation of the executable S/W is located in Appendix C.

A. Verify that the DACS is on and operational.

B. On the Motor Control page, enter/verify the following parameters using the F1 key per the Test Conductor's direction (see Figure C-1):

(1) Bolt serial no.
Nut serial no.
test designation (AMB_FUN)
RPM (0)
torque and load limits (1510, 17500)
direction of travel (in)
no. of revs (0)
start and end cycles (25,25)
recording (off)
data file name (see note below)
control scenario (auto)
fixture load cal value (from cal data sheets)
torque cal value (from cal data sheets)

Note: Data file name will be as follows:
For PBN: PBNxxxxA - where xxxx is the SN of the PBN Assembly

NOTE: If both a Flight PB and PBN are being tested, the PB SN will be used.

(2) Record Bolt and Nut S/N's, Data File Name and Cal values in the appropriate Table in Section 6.4 of Appendix D.

C. If the Absolute Revs value is other than zero, zero it using the F3 key.

D. Zero fixture load and torque cells using F5 and F8 keys respectively on the Motor Control Screen.

6.5.3 *Functional Test Run*

NOTE: This section provides the steps for running the functional test.

A. Verify the test area is clear of all nonessential personnel and all other cautions and/or warnings have been adhered to.

B. Record ambient conditions of temperature, humidity, and atmospheric pressure in Section 6.5.3 of Appendix D and verify within limits.

C. Start the data recording.

EMERGENCY MOTOR STOP

USE F7 TO STOP MOTOR MOVEMENT AT ANY TIME (MANUAL OR AUTO MOTOR MOVEMENT MODES)

D. Start the functional test by pressing F2.

E. At the completion of Cycle 25, verify the system is not in the User Input mode and press <CTRL><C> to exit the executable S/W and return to MS-DOS.

6.6 DATA VERIFICATION

NOTE: This section provides the steps for verifying the data is satisfactory following the functional test.

A. Transfer recorded data from the DACS to the Data Reduction Center.

B. Record the Max Loads and Max Torque values for each cycle in Section 6.6 of Appendix D.

C. Verify that the Max Loads and Max Torque values meet the requirements as defined in Section 3.2D of this document. Record in Section 6.6 of Appendix D.

6.7 DACS SAFING AND POWER DOWN

NOTE: This section provides the steps for safing and powering down the DACS, if required.

A. Verify that the test data has been downloaded from the DACS to floppy disk and labeled per Appendix C.

B. Power off the DACS: (Only if no more testing is to be done)

(1) Power off the DACS Cabinet including the extender chassis and main chassis.

(2) Remove the QA version of the executable S/W.

(3) Power off the PC and motor control power supplies.

C. Record data in Section 6.7 of Appendix D.

6.8 FUNCTIONAL TEST TEARDOWN

NOTE: This Section contains the steps required to remove the test article(s) the Functional Test Setup.

A. Verify that all power has been removed from the test setup.

CAUTION

**USE EXTREME CARE WHEN HANDLING TEST ARTICLES.
CLEAN WHITE COTTON GLOVES MUST BE WORN
WHEN HANDLING TEST ARTICLES.**

B. Remove the Test Article from the Functional Test Fixture (reference SK683-23504).

C. Perform an external visual inspection of the test article. Record any comments in Section 6.8 of Appendix D.

D. Package Test Article for movement from Functional Test Area to the Vibration Test Area. All other hardware and equipment is to remain at the Functional Test Area.

NOTE: The Functional Test Fixture will remain in place. Only the PBN Test Article will be transported to the vibration area. If storage of the test articles is required, they will be stored in an appropriate DCA location.

NOTE: The Test Teardown required following Functional Test Conduct has been completed.

6.9 INSTRUMENTATION AND TEST FIXTURE SET UP / CHECKOUT

6.9.1 *Setup*

A. Record the facility location in Section 6.3 of Appendix D.

NOTE: This section contains the steps for performance of the PBN Functional Test / Thermal Vac Test Instrumentation, Motor Control System, and Test Fixture setup. Perform this set up for initial Fixture configuration and for Fixture changes only. Software operation is defined in Appendix C.

B. Position the Thermal Vac Test Fixture Assembly, SK683-23620, in the planned test area. Record Fixture Assembly Part Number (P/N) and serial number (S/N) in Appendix D.

C. Install Test Support Equipment, (TSE), bolt and nut per SK683-23504.

D. Setup the PC Control and Instrumentation System per drawing SK683-23510.

E. Connect the cables from the PB Actuator to the power control rack per SK683-23510.

6.9.2 *Checkout*

A. Refer to Appendix C for software operations.

B. Input / verify the calibration values for the fixture load and torque for the given Functional Fixture / Bolt. (Calibration values available from Calibration Data Sheets).

C. Power on the DACS and load the executable S/W. Record name and revision level of S/W in Appendix D.

(1) Set up and initialize DACS as applicable per Appendix C.

(2) Open Bolt File Name and set Bolt information.

(3) Zero the fixture load.

(4) Apply compressive load to Fixture Load Cell, verify a negative reaction

(5) Apply the required precision shunt resistance (from Calibration Data Sheet) to the fixture load cell across - EXC and - SIG pins. Note, use the test points located on the Load Cell Cable at the back of the Test Rack, per SK683-23510.

(6) Verify the displayed value for the load is of the proper polarity and magnitude (Range = value from Calibration Data Sheet +/- 100 lbs.). Record Fixture load reading in Appendix D.

(7) Remove the precision shunt resistance from the fixture load cell.

(8) Zero the torque offset.

(9) Manually apply a torque to the torque cell.

(10) Verify the displayed value for the given Fixture / Bolt is of proper polarity and magnitude for the torque cell measurement in comparison to Torque Cell Digital Display.

(11) Remove the applied torque from the torque cell.

(12) Zero load and torque offsets.

(13) Zero the Rev Positions.

(14) Verify the operation of Manual Motor Movement per Appendix C.

(15) Verify the operation of Auto Motor Movement per Appendix C.

(16) Verify the operation of Emergency Motor Stop function.

(17) Verify that data was written to the DACS hard disk under the data file name input from above.

(18) Remove TSE Bolt and Nut from Test Fixture.

6.10 TEST ARTICLE SETUP

A. Acquire all equipment required for this section as specified in Appendix A. Record required equipment P/Ns and S/Ns in Appendix D. Verify that the DACS equipment is in calibration and record required calibration dates in Appendix D.

CAUTION

**USE EXTREME CARE WHEN HANDLING TEST ARTICLES.
CLEAN WHITE COTTON GLOVES MUST BE WORN
WHEN HANDLING TEST ARTICLES.**

B. Record the Part Number (P/N) and Serial Number (S/N) of the Test Article in Appendix D.

C. Center the encapsulated nut and washers within the cutout in the nut plate prior to installation in test fixture. Take care not to move encapsulated nut relative to nut plate during or after installation. Verify washers are not trapped between nut plate

and Test fixture by taking a .01 inch shim to confirm that the nut plate is flush with the test fixture.

D. Install Test Article in the Test Fixture per SK683-23504.

E. Record the P/N and S/N of the mating test article (Powered Bolt (PB) being used for this test.

F. Set gap between active and passive flanges (Range = .275 to .325 in.). Record flange gap in Appendix D.

G. Verify that the DACS is on and operational.

H. Setup the Ambient Condition Monitor and verify the capability to monitor ambient temperature, relative humidity, and atmospheric pressure.

6.11 FUNCTIONAL PERFORMANCE TEST

6.11.1 *Initial Setup*

A. Verify a PB and a PBN have been installed on the functional test fixture per SK683-23504 and instrumentation checkout completed.

B. Verify that Boeing Instrumentation and Test Operations personnel are ready to start test.

6.11.2 *DACS Startup*

NOTE: A User's Guide to the manipulation of the executable S/W is located in Appendix C.

A. Verify that the DACS is on and operational.

B. Record Bolt and Nut Serial Numbers,(SN's), Data File name in the appropriate Table in Appendix D.

C. Zero Absolute Revs per Appendix C.

D. Zero fixture load and torque cells.

E. Verify Bolt info: Fixture #, Bolt SN #, Start Cycle, End Cycle Load Limit=17500 Lbs., and Torque Limit=1510 In-Lbs. for Cycle #25.

6.11.3 *Functional Test Run*

NOTE: This section provides the steps for running the functional test.

A. Verify the test area is clear of all nonessential personnel and all other cautions and/or warnings have been adhered to.

B. Record ambient conditions of temperature, humidity, and atmospheric pressure in Appendix D and verify within limits.

EMERGENCY MOTOR STOP

USE F9 TO STOP ALL MOTOR MOVEMENT AT ANY TIME (MANUAL OR AUTO MOTOR MOVEMENT MODES).

C. Start the functional test, cycle number 25.

D. At the completion of cycle 25, verify all motors have stopped. If there is no additional testing required, exit the program per Appendix C.

6.12 DATA VERIFICATION

NOTE: This section provides the steps for verifying the data is satisfactory following the functional test.

A. Record the Max Loads and Max Torque values for each cycle in Appendix D.

B. Verify that the Max Loads and Max Torque values meet the requirements as defined in Section 3.2D of this document.

6.13 DACS SAFING AND POWER DOWN

NOTE: This section provides the steps for safing and powering down the DACS, if no further testing is required.

A. Verify that the test data has been downloaded from the DACS to floppy disk and the disk has been labeled per Appendix C.

B. Power off the DACS: (Only if no more testing is to be done)

(1) Power off the DACS Cabinet.

(2) Power off the PC and motor control power supplies.

6.14 FUNCTIONAL TEST TEARDOWN

NOTE: This Section contains the steps required to remove the test article(s) from the Functional Test Setup, if no additional testing is required.

A. Verify that all power has been removed from the test setup.

CAUTION

**USE EXTREME CARE WHEN HANDLING TEST ARTICLES.
CLEAN WHITE COTTON GLOVES MUST BE WORN
WHEN HANDLING TEST ARTICLES.**

B. Remove the Test Article from the Functional Test Fixture (reference SK683-23504).

C. Perform an external visual inspection of the test article. Record any comments in Appendix D.

D. Package the Test Article appropriately for the next test or for shipment.

NOTE: The Functional Test Fixture will remain in place. Only the PBN Test Article will be transported. If storage of the test articles is required, they will be stored in an appropriate storage location.

6.15 VIBRATION ACCEPTANCE TEST

6.15.1 *Axial Direction Vibration Test Setup*

A. Record location of vibration facility in Section 6.9 of Appendix D.

NOTE: This section contains the steps for performance of the PB Axial Direction Vibration Test setup.

CAUTION

**USE EXTREME CARE WHEN HANDLING TEST ARTICLES.
CLEAN WHITE COTTON GLOVES MUST BE WORN
WHEN HANDLING TEST ARTICLES.**

B. Acquire all equipment required for this section as specified in Appendix A. Record required P/Ns and S/Ns in Section 6.9.1 of Appendix D for the specified equipment.

C. Perform test setup of the Axial Direction Vibration Test Configuration per the following:

(1) Install the vibration test fixture, SK683-82154, on the Vertical Vibration Test Machine in the Axial Direction orientation per SK683-23505. Record torque value in Section 6.9.1.of Appendix D.

(2) Prior to installing the Test Article, perform running torque verification on the inserts on the Test Article mounting fixture (SK683-82154). Record torque values in Section 6.9.1 of Appendix D. (torque 4 in-lbs min.)

(3) Install the Test Article(s) on the vibration test fixture(s) per SK683-23505. Record the number of test articles being tested and their serial numbers in Section 6.9.1 of Appendix D.

(4) Record, in Section 6.9.1 of Appendix D, the end torque value of the test article(s) to fixture mounting bolts.

D. Verify the installation of the control accelerometers on the vibration fixture per SK683-23505.

E. Connect the appropriate accelerometer instrumentation cable per SK683-23510.

F. Restrain all instrumentation wiring from vibrating freely during test such that damage to installed instrumentation will not occur.

NOTE: The Test Setup required to support the PBN Axial Direction Vibration Test Conduct has been completed.

6.15.2 *Axial Direction Vibration Test*

A. Clear test area of all nonessential personnel.

B. Verify that Boeing Instrumentation and Test Operations and NASA Vibration Lab personnel are ready to start test.

WARNING

TEST ARTICLE FAILURE COULD RESULT IN FLYING PARTICLES. ALL PERSONNEL MUST REMAIN OUTSIDE OF THE VIBRATION TEST ROOM.

C. Prepare Vibration Control System for Random Vibration test (NASA personnel will perform this operation).

D. Start data recording at Test Conductor's direction and record the stop time in Section 6.9.2 of Appendix D.

E. Perform vibration per the table below for a duration of 1 minute:

NOTE: The tolerance levels for the Vibration test shall be per SSP 41172.

Frequency (Hz)	Level
20	0.020 g^2 /Hz
20-25	+ 3.0 dB/oct
25	0.025 g^2 /Hz
25-100	+ 6.0 dB/oct
100-300	0.40 g^2/Hz
300-508	- 9.0 dB/oct
508	0.078 g^2 /Hz
508-2000	- 3.0 dB/oct
2000	0.02 g^2/Hz
Composite	13.64 g rms

F. Stop data recording at Test Conductor's direction and record the stop time in Section 6.9.2 of Appendix D.

G. Verify data has been recorded.

6.15.3 *Axial Direction Vibration Test Teardown*

NOTE: This section contains the steps for performance of test teardown after the Axial Direction Vibration Test.

CAUTION

**USE EXTREME CARE WHEN HANDLING TEST ARTICLES.
CLEAN WHITE COTTON GLOVES MUST BE WORN
WHEN HANDLING TEST ARTICLES.**

A. Remove accelerometer data cable (ref SK683-23505).

B. Perform an external visual inspection of test article(s) and record any comments in Section 6.9.3 of Appendix D.

C. Remove the vibration test fixture(s), SK683-82154, from the Vertical Vibration Machine (ref SK683-23505).

NOTE: The Test Teardown required after the Axial Direction Vibration Test Conduct has been completed. Setup for the Radial Direction Vibration Test can now begin.

6.15.4 *Radial Direction Vibration Test Setup*

NOTE: This section contains the steps for performance of the Radial Direction Vibration Test setup.

CAUTION

**USE EXTREME CARE WHEN HANDLING TEST ARTICLES.
CLEAN WHITE COTTON GLOVES MUST BE WORN
WHEN HANDLING TEST ARTICLES.**

A. Install the vibration test fixture(s) (with premounted test articles) on the Horizontal Vibration Test Machine in the Radial Direction orientation per SK683-23505. Record mounting bolt torque values in Section 6.9.4 of Appendix D.

B. Connect the appropriate accelerometer instrumentation cable per SK683-23510.

C. Restrain all instrumentation wiring from vibrating freely during test such that damage to installed instrumentation will not occur.

NOTE: The Test Setup required to support Radial Direction Vibration Test Conduct has been completed.

6.15.5 *Radial Direction Vibration Test*

A. Clear test area of all nonessential personnel.

B. Verify that Boeing Instrumentation and Test Operations and NASA Vibration Lab personnel are ready to start test.

WARNING

TEST ARTICLE FAILURE COULD RESULT IN FLYING PARTICLES. ALL PERSONNEL MUST REMAIN OUTSIDE OF THE VIBRATION TEST ROOM.

C. Prepare Vibration Control System for Random Vibration (NASA personnel will perform this operation).

D. Start data recording at Test Conductor's direction and record the start time in Section 6.9.5.of Appendix D.

E. Perform vibration per the table below for a duration of 1 minute:

NOTE: The tolerance levels for the Vibration test shall be per SSP 41172.

Frequency (Hz)	Level
20	0.020 g^2 /Hz
20-80	+ 3.0 dB/oct
80-350	0.08 g^2/Hz
350-483	- 3.0 dB/oct

483	0.058 g^2/Hz
483-508	+ 17.6 dB/oct
508	0.078 g^2/Hz
508-2000	- 3.0 dB/oct
2000	0.02 g^2/Hz
Composite	9.5 g rms

F. Stop data recording at Test Conductor's direction and record the stop time in Section 6.9.5 of Appendix D.

G. Verify data has been recorded.

6.15.6 *Radial Direction Vibration Test Teardown*

NOTE: This section contains the steps for performance of test teardown after the Radial Direction Vibration Test.

CAUTION

USE EXTREME CARE WHEN HANDLING TEST ARTICLES. CLEAN WHITE COTTON GLOVES MUST BE WORN WHEN HANDLING TEST ARTICLES.

A. Remove accelerometer data cable (ref SK683-23505).

B. Perform an external visual inspection of test article(s) and record any comments in Section 6.9.6 of Appendix D.

C. Remove the vibration test fixture(s), SK683-82154, from the Horizontal Vibration Machine (ref SK683-23505).

NOTE: The Test Teardown required after the Radial Direction Vibration Test Conduct has been completed. Test setup for Tangential Vibration Test may now begin.

6.15.7 *Tangential Direction Vibration Test Setup*

NOTE: This section contains the steps for performance of the Tangential Direction Vibration Test setup.

CAUTION

USE EXTREME CARE WHEN HANDLING TEST ARTICLES. CLEAN WHITE COTTON GLOVES MUST BE WORN WHEN HANDLING TEST ARTICLES.

A. Install the vibration test fixture(s) (with installed test articles) on the Horizontal Vibration Test Machine in the Tangential Direction orientation per SK683-23505. Record mounting bolt torque values in Section 6.9.7 of Appendix D.

B. Connect the appropriate accelerometer instrumentation cable per SK683-23510.

C. Restrain all instrumentation wiring from vibrating freely during test such that damage to installed instrumentation will not occur.

NOTE: The Test Setup required to support Tangential Direction Vibration Test Conduct has been completed.

6.15.8 *Tangential Direction Vibration Test*

A. Clear test area of all nonessential personnel.

B. Verify that Boeing Instrumentation and Test Operations and NASA Vibration Lab personnel are ready to start test.

WARNING

TEST ARTICLE FAILURE COULD RESULT IN FLYING PARTICLES. ALL PERSONNEL MUST REMAIN OUTSIDE OF THE VIBRATION TEST ROOM.

C. Prepare Vibration Control System for Random Vibration (NASA personnel will perform this operation).

D. Start data recording at Test Conductor's direction and record the start time in Section 6,9,8 of Appendix D.

E. Perform vibration per the table below for a duration of 1 minute:

NOTE: The tolerance levels for the Vibration test shall be per SSP 41172.

Frequency (Hz)	Level
20	0.020 g^2 /Hz
20-80	+ 3.0 dB/oct
80-350	0.08 g^2/Hz
350-483	- 3.0 dB/oct
483	0.058 g^2/Hz
483-508	+ 17.6 dB/oct
508	0.078 g^2/Hz
508-2000	- 3.0 dB/oct

2000	0.02 g^2/Hz
Composite	9.5 g rms

F. Stop data recording at Test Conductor's direction and record the stop time in Section 6.9.8 of Appendix D.

G. Verify data has been recorded.

6.15.9 *Tangential Direction Vibration Test Teardown*

NOTE: This section contains the steps for performance of test teardown after the Tangential Direction Vibration Test.

CAUTION

USE EXTREME CARE WHEN HANDLING TEST ARTICLES. CLEAN WHITE COTTON GLOVES MUST BE WORN WHEN HANDLING TEST ARTICLES.

A. Remove accelerometer data cable (ref SK683-23505).

B. Remove the Test Article(s) from the vibration test fixture (reference SK683-23505) and record the mounting bolt break away torque in Section 6.9.9 of Appendix D.

C. Perform an external visual inspection of test article(s) and record any comments in 6.9.9 of Appendix D. Wipe external surfaces with 200 proof denatured alcohol. Record any comments in Section 6.9.9 of Appendix D.

D. Remove the vibration test fixture(s) from the Horizontal Vibration Test Machine (reference SK683-23505).

E. Package Test Article(s) for movement from Vibration Test Area to the Functional Test Area. All other hardware and equipment is to remain at the Vibration Test Area.

NOTE: The Test Teardown required after the Tangential Direction Vibration Test Conduct has been completed.

6.16 GENERAL NOTES - VIBROACOUSTIC TEST

The following general notes/guidelines are applicable to the Vibroacoustic Test procedures.

A. This section may be run in place of the Vibration section. Only one of these sections needs to be performed to accept a PBN Assembly.

B. This section has been written to support performance of the vibroacoustic Test on the Powered Bolt Nut Test Article. If more than one test articles (i.e. four PBN's) are to be vibroacoustic tested, then all test articles must have been functionally tested prior to this section.

C. All data recording and data buyoffs will be recorded in Appendix D.

D. The PB/PBN will not be preloaded during the vibroacoustic test.

E. The vibroacoustic Test will be performed in MSFC Building 4619 Vibroacoustic Facility or equivalent.

6.17 FACILITY READINESS

A. Record test area location in Section 6.10 of Appendix D. Verify that the Vibroacoustic Fixture has been certified per D683-85134-1. Record Certification expiration date in
Appendix D.

B. Verify that the planned MSFC microphones and accelerometers meet applicable calibration certification requirements.

6.18 VIBROACOUSTIC TEST

6.18.1 *Vibroacoustic Test Setup*

CAUTION

**USE EXTREME CARE WHEN HANDLING TEST ARTICLES.
CLEAN WHITE COTTON GLOVES MUST BE WORN
WHEN HANDLING TEST ARTICLES.**

A. Acquire all equipment required for this section as specified in Appendix A. Record the equipment P/Ns and S/Ns in Section 6.10.1 of Appendix D for the specified equipment.

B. Perform test setup of the PBN vibroacoustic Test Configuration per the following:

(1) Install the vibroacoustic test fixture, SK683-82154-1, in the vibroacoustic Test cell per SK683-23505.

(2) Prior to installing Test Article, perform running torque verification on the inserts on the Test Article mounting fixture. Record values in Section 6.10.1 of Appendix D. (torque to 4 in-lbs min.)

(3) Install the PBN Test Article(s) on the vibroacoustic test fixture(s) per SK683-23505. Record in Section 6.10.1 of Appendix D the number of test articles being tested and their positions on the test fixture(s).

(4) Record in Section 6.10.1 of Appendix D the end torque value of the test article(s) to fixture mounting bolts.

C. Verify the installation of the data accelerometers (all three axes) on the vibroacoustic fixture per SK683-23505.

D. Connect the appropriate accelerometer instrumentation cables per SK683-23510.

E. Restrain all instrumentation wiring from vibrating freely during test such that damage to installed instrumentation will not occur.

6.18.2 *Vibroacoustic Test*

NOTE: The pre-vibroacoustic functional test was performed in Section 4.

A. Clear test area of all nonessential personnel.

B. Start data recording at Test Conductor's direction and record the start time in Section 6.10.2 of Appendix D.

WARNING

TEST ARTICLE FAILURE COULD RESULT IN FLYING PARTICLES. ALL PERSONNEL MUST REMAIN OUTSIDE OF THE VIBROACOUSTIC TEST ROOM.

C. Perform vibroacoustic test for one (1) minute at the levels specified below:

1/3 Octave Center Band Frequency (Hz)	Sound Pressure Level (dB)
20	121.0
25	123.0
31.5	125.0
40	127.0
50	128.5
63	130.5
80	131.0
100	131.5
125	132.0
160	132.0
200	131.5
250	132.0
315	130.0
400	128.0
500	126.0
630	124.5
800	123.0
1000	120.5
1250	119.0
1600	117.0
2000	115.0
2500	113.0
Overall	141.0

NOTE: The tolerance levels for the Vibration test shall be per SSP 41172.

D. Stop data recording and record the stop time in Section 6.10.2 of Appendix D.

E. Verify data has been recorded.

6.18.3 *Vibroacoustic Test Teardown*

CAUTION

**USE EXTREME CARE WHEN HANDLING TEST ARTICLES.
CLEAN WHITE COTTON GLOVES MUST BE WORN
WHEN HANDLING TEST ARTICLES.**

A. Remove accelerometer data cables (ref SK683-23505).

B. Remove the PBN Test Article(s) from the vibroacoustic test fixture (reference SK683-23505) and record the mounting bolt break away torque in Section 6.10.3 of Appendix D.

C. Perform an external visual inspection of test article(s) and record any comments in Section 6.10.3 of Appendix D.

D. If needed, remove the vibroacoustic test fixture(s) from the test chamber (reference SK683-23505).

E. Package Test Article(s) for movement from the Vibroacoustic Test Area to the Functional Test Area.

NOTE: Go to Section 6.19 to continue PBN Vibration/Vibroacoustic Test (Post Test Functional Cycles).

6.19 POST VIBRATION/VIBROACOUSTIC FUNCTIONAL TEST

Following the Vibration / Vibroacoustic Test the Powered Bolt Nut will be Functionally Tested for three cycles. cycles numbers 26 through 28.

This section of the document contains two setup procedures, if using test fixture SK683-13741, refer to sections 6.19.1 through 6.20, and if using test fixture SK683-23620 refer to sections 6.21 through 6.26.

6.19.1 *Test Article Setup*

A. Record facility location in Section 6.11 of Appendix D.

CAUTION

USE EXTREME CARE WHEN HANDLING TEST ARTICLES.
CLEAN WHITE COTTON GLOVES MUST BE WORN
WHEN HANDLING TEST ARTICLES.

B. Install the Test Article on the Functional Test Fixture per SK683-23504. Record the Fixture Assembly P/N and S/N in Section 6.12 of Appendix D. Record the Test Article S/N in Appendix D.

C. Verify that a mating component (PB) is installed in the Functional Test Fixture per SK683-23504. Record the P/N and S/N in Section 6.12 Appendix D.

D. Set gap between active and passive flanges (Range = .275 to .325 in.). Record flange gap in Section 6.12 of Appendix D.

NOTE: The Test Setup required to support Functional Test Conduct has been completed. Functional Test Conduct may now be performed.

6.19.2 *Initial Setup*

A. Verify that a PB and a PBN have been installed on the functional test fixture and instrumentation checkout completed.

B. Verify that Boeing Instrumentation and Test Operations personnel are ready to start test.

6.19.3 *DACS Startup*

NOTE: A User's Guide to the manipulation of the executable S/W is located in Appendix C.

A. Power on the DACS and load the executable S/W. Record name and revision level of S/W in Section 6.11.2 of Appendix D.

B. On the Motor Control page, enter/verify the following parameters using the F1 key per the Test Conductor's direction (see Figure C-1):

(1) Bolt serial no.
Nut serial no.
test designation (POST_VIB)
RPM (0)
torque and load limits (1510,17500)
direction of travel (in)
no. of revs (0)
start and end cycles (26,28)
recording (off)
data file name (see note below)
control scenario (auto)
fixture load cal value (from cal data sheet)
torque cal value (from cal data sheet)

Note: Data file name will be as follows:
For PBN: PBNxxxxA - where xxxx is the SN of the PBN Assembly

NOTE: If both a Flight PB and PBN are being tested, the PB SN will be used.

(2) Record Bolt and Nut S/N's, Data File Name and Cal values in the appropriate Table in Section 6.12.2 of Appendix D.

C. If the Absolute Revs value is other than zero, zero it using the F3 key.

D. Zero fixture load and torque cells using F5 and F8 keys respectively on the Motor Control Screen.

6.19.4 *Functional Test Run*

NOTE: This section provides the steps for running the functional test.

A. Verify the test area is clear of all nonessential personnel and all other cautions and/or warnings have been adhered to.

B. Record ambient conditions of temperature, humidity, and atmospheric pressure in Section 6.12.3 of Appendix D and verify within limits.

C. Start the data recording.

EMERGENCY MOTOR STOP

USE F7 TO STOP MOTOR MOVEMENT AT ANY TIME (MANUAL OR AUTO MOTOR MOVEMENT MODES)

D. Start the functional test by pressing F2.

E. At completion of Cycles 26 through 28 , verify the system is not in the User Input mode and press <CTRL><C> to exit the executable S/W and return to MS-DOS.

6.19.5 *Data Verification*

NOTE: This section provides the steps for verifying the data is satisfactory following the functional test.

A. Transfer recorded data from DACS to the Data Reduction Center.

B. Record the Max Loads and Max Torque values for each cycle in Section 6.13 of Appendix D.

C. Verify that the Max Loads and Max Torque values meet the requirements as defined in Section 3.2D of this document. Record data in Section 6.13 of Appendix D.

6.19.6 *DACS Safing And Power Down*

NOTE: This section provides the steps for safing and powering down the DACS, if required.

A. Verify that the test data has been downloaded from the DACS to floppy disk and the disk has been labeled per Appendix C.

B. Power off the DACS: (only if no more testing is be done)

(1) Power off the DACS Cabinet including the extender chassis and main chassis.

(2) Remove the QA version of the executable S/W.

(3) Power off the PC and motor control power supplies.

C. Record data in Section 6.14 of Appendix D.

6.20 FUNCTIONAL TEST TEARDOWN

NOTE: This Section contains the steps required to remove the test article(s) the Functional Test Setup.

A. Verify that all power has been removed from the test setup.

CAUTION

**USE EXTREME CARE WHEN HANDLING TEST ARTICLES.
CLEAN WHITE COTTON GLOVES MUST BE WORN
WHEN HANDLING TEST ARTICLES.**

B. Remove the Test Article from the PB Functional Test Fixture (reference SK683-23504).

C. Perform an external visual inspection of the test articles. Record any comments in Section 6.15 of Appendix D.

D. Package Test Article(s) for movement from Functional Test Area to the Vacuum Test Area. All other hardware and equipment is to remain at the Functional Test Area.

NOTE: The Functional Test Fixture will remain in place. Only the Test Article(s) will be transported to the Vacuum test area.

NOTE: The Test Teardown required following Functional Test Conduct has been completed.

6.21 INSTRUMENTATION AND TEST FIXTURE SET UP / CHECKOUT

A. Record facility location in Appendix D.

6.21.1 *Setup*

NOTE: This section contains the steps for performance of the PBN Functional Test / Thermal Vac Test Instrumentation, Motor Control System, and Test Fixture setup. Perform this set up for initial Fixture configuration and for Fixture changes only. Software operation is defined in Appendix C.

A. Position the Thermal Vac Test Fixture Assembly, SK683-23620, in the planned test area. Record Fixture Assembly Part Number (P/N) and serial number (S/N) in Appendix D.

B. Install Test Support Equipment, (TSE), bolt and nut per SK683-23504.

C. Setup the PC Control and Instrumentation System per drawing SK683-23510.

D. Connect the cables from the PB Actuator to the power control rack per SK683-23510.

6.21.2 *Checkout*

A. Refer to Appendix ”C” for software operations.

B. Input / verify the calibration values for the fixture load and torque for the given Functional Fixture / Bolt. (Calibration values available from Calibration Data Sheets).

C. Power on the DACS and load the executable S/W. Record name and revision level of S/W in Appendix D.

(1) Set up and initialize DACS as applicable per Appendix C.

(2) Open Bolt File Name and set Bolt information.

(3) Zero the fixture load.

(4) Apply compressive load to Fixture Load Cell, verify a negative reaction

(5) Apply the required precision shunt resistance (from Calibration Data Sheet) to the fixture load cell across - EXC and - SIG pins. Note, use the test points

located on the Load Cell Cable at the back of the Test Rack, per SK683-23510.

(6) Verify the displayed value for the load is of the proper polarity and magnitude (Range = value from Calibration Data Sheet +/- 100 lbs.). Record Fixture load reading in Appendix D.

(7) Remove the precision shunt resistance from the fixture load cell.

(8) Zero the torque offset.

(9) Manually apply a torque to the torque cell.

(10) Verify the displayed value for the given Fixture / Bolt is of proper polarity and magnitude for the torque cell measurement in comparison to Torque Cell Digital Display.

(11) Remove the applied torque from the torque cell.

(12) Zero load and torque offsets.

(13) Zero the Rev Positions.

(14) Verify the operation of Manual Motor Movement per Appendix C.

(15) Verify the operation of Auto Motor Movement per Appendix C.

(16) Verify the operation of Emergency Motor Stop function.

(17) Verify that data was written to the DACS hard disk under the data file name input from above.

(18) Remove TSE Bolt and Nut from Test Fixture.

(19) Repeat steps C(1) through C(18) for each Thermal Vac Fixture / Bolt set up.

6.22 TEST ARTICLE SETUP

A. Acquire all equipment required for this section as specified in Appendix A. Record required equipment P/Ns and S/Ns in Section 6.12 of Appendix D. Verify that the DACS equipment is in calibration and record required calibration dates in Appendix D.

CAUTION

USE EXTREME CARE WHEN HANDLING TEST ARTICLES. CLEAN WHITE COTTON GLOVES MUST BE WORN WHEN HANDLING TEST ARTICLES.

B. Record the Part Number (P/N) and Serial Number (S/N) of the Test Article in Appendix D.

C. Center the encapsulated nut and washers within the cutout in the nut plate prior to installation in test fixture. Take care not to move encapsulated nut relative to nut plate during or after installation. Verify washers are not trapped between nut plate and Test fixture by taking a .01 inch shim to confirm that the nut plate is flush with the test fixture.

D. Install Test Article in the Test Fixture per SK683-23504.

E. Record the P/N and S/N of the mating test article (Powered Bolt (PB) being used for this test in Appendix D.

F. Set gap between active and passive flanges (Range = .275 to .325 in.). Record flange gap in Appendix D.

G. Verify that the DACS is on and operational.

H. Setup the Ambient Condition Monitor and verify the capability to monitor ambient temperature, relative humidity, and atmospheric pressure.

6.23 FUNCTIONAL PERFORMANCE TEST

6.23.1 *Initial Setup*

A. Verify a PB and a PBN have been installed on the functional test fixture and instrumentation checkout completed.

B. Verify that Boeing Instrumentation and Test Operations personnel are ready to start test.

6.23.2 *DACS Startup*

NOTE: A User's Guide to the manipulation of the executable S/W is located in Appendix C.

A. Verify that the DACS is on and operational.

B. Record Bolt and Nut Serial Numbers,(SN's), Data File name in the appropriate Table in Appendix D.

C. Zero Absolute Revs per Appendix C.

D. Zero fixture load and torque cells.

E. Verify Bolt info: Fixture #, Bolt SN #, Start Cycle, End Cycle Load Limit=17500 Lbs., and Torque Limit=1510 In-Lbs. for cycles 26 through 28.

6.23.3 *Functional Test Run*

NOTE: This section provides the steps for running the functional test.

A. Verify the test area is clear of all nonessential personnel and all other cautions and/or warnings have been adhered to.

B. Record ambient conditions of temperature, humidity, and atmospheric pressure in Appendix D and verify within limits.

USE F9 TO STOP ALL MOTOR MOVEMENT AT ANY TIME (MANUAL OR AUTO MOTOR MOVEMENT MODES).

C. Start the functional test, cycle numbers 26-28.

D. Record the Max Loads and Max Torque values for each cycle in Appendix D.

E. At the completion of Cycle 28, verify all motors have stopped. If there is no additional testing required, exit the program per Appendix C.

6.24 DATA VERIFICATION

NOTE: This section provides the steps for verifying the data is satisfactory following the functional test.

A. Verify that the Max Loads and Max Torque values meet the requirements as defined in Section 3.2D of this document. Record data in Appendix D.

6.25 DACS SAFING AND POWER DOWN

NOTE: This section provides the steps for safing and powering down the DACS, if no further testing is required.

A. Verify that the test data has been downloaded from the DACS to floppy disk and the disk has been labeled per Appendix C.

B. Power off the DACS: (Only if no more testing is to be done)

(1) Power off the DACS Cabinet.

(2) Power off the PC and motor control power supplies.

6.26 FUNCTIONAL TEST TEARDOWN

NOTE: This Section contains the steps required to remove the test article(s) from the Functional Test Setup, if no additional testing is required.

A. Verify that all power has been removed from the test setup.

CAUTION

**USE EXTREME CARE WHEN HANDLING TEST ARTICLES.
CLEAN WHITE COTTON GLOVES MUST BE WORN
WHEN HANDLING TEST ARTICLES.**

B. Remove the Test Article from the Functional Test Fixture (reference SK683-23504).

C. Perform an external visual inspection of the test article. Record any comments in Appendix D.

D. Package the Test Article appropriately for the next test or for shipment.

NOTE: The Functional Test Fixture will remain in place. Only the PBN Test Article will be transported. If storage of the test articles is required, they will be stored in an appropriate DCA location.

(This Page Intentionally Blank)

SECTION 7, POST THERMAL FUNCTIONAL TEST

7.1 GENERAL NOTES

A. This Section of the Test Procedure performs the first Functional Test on the PBN Test Articles.

B. All manual data recording and procedure step buyoffs are to be recorded in Appendix D. If a Flight PB and a Flight PBN are being accepted together, data must be recorded in each test articles' Appendix D.

C. Sections 7.2 and 7.3 (or 7.9.1 and 7.9.2 for fixture SK683-23620) are not required if the test fixture has already been checked out in its current location. Section 7.3.2 (all or part) may be performed at any time at IE's or TC's direction.

7.2 FACILITY READINESS

A. Record facility location in Section 7.1 Appendix D.

7.3 INSTRUMENTATION AND TEST FIXTURE SETUP/CHECKOUT

This section of the document contains two setup procedures, if using test fixture SK683-13741, refer to sections 7.3.1 through 7.8, and if using test fixture SK683-23620 refer to sections 7.9 through 7.14.

7.3.1 *Setup*

NOTE: This section contains the steps for performance of the PBN Functional Test Instrumentation, Motor Control System, and Test Fixture setup. Software operation is defined in Appendix C.

A. Position the Functional Test Fixture Assembly, SK683-23504 or SK683-23620, in the planned test area. (SK683-13744 is allowable if functional tests are to be conducted inside the vacuum chamber.) Record Fixture Assy Part Number (P/N) and Serial Number (S/N) in Section 7.2 of Appendix D.

B. Setup the PC Control and Instrumentation System per drawing SK683-23510.

C. Connect the cables from the PB Actuator to the power control rack per SK683-23510.

7.3.2 *Checkout*

A. Power on the DACS and load the executable S/W. Record name and revision level of S/W in Section 7.4 of Appendix D.

B. Input the calibration values for the fixture load and torque on the Motor Control Screen. (Calibration values available from Calibration Data Sheets).

C. Zero the fixture load offset using the F8 key on the Motor Control Screen.

D. Apply the required precision shunt resistance (from Calibration Data Sheet) to the fixture load cell across - EXC and - SIG pins..

E. Verify the displayed value for the load is of proper polarity and amount (Range = value from Calibration Data Sheet +/- 100 lbs.). Record Fixture load reading in Section 7.12 of Appendix D.

F. Remove the precision resistance from the fixture load cell.

G. Verify the calibration value for the torque cell has been loaded and verify proper values on the Motor Control Screen

H. Zero the torque offset using the F5 key on the Motor Control Screen.

I. Manually apply a torque to the torque cell.

J. Verify the displayed value on the Motor Control Screen is of proper polarity and amount for the torque cell measurement in comparison to Torque Cell Digital Display.

K. Remove the applied torque from the torque cell.

L. Zero load and torque offsets using the F5 and F8 keys on the Motor Control Screen.

M. Zero the Rev Positions using the F3 key on the Motor Control Screen.

N. Enter a Data File Name on the Motor Control Screen.

O. Verify the operation of Manual Motor Movement per Appendix C.

P. Verify the operation of Auto Motor Movement per Appendix C.

Q. Verify the operation of Emergency Motor Stop function using F7.

R. Verify that data was written to the DACS hard disk under the name input from above.

S. Per Test Conductor (TC) direction power down the DACS, if required.

7.4 TEST ARTICLE SETUP

A. Acquire all equipment required for this section as specified in Appendix A. Record required equipment P/Ns and S/Ns in Section 7.2 of Appendix D. Verify that the DACS equipment is in calibration and record required calibration dates in Section 7.2 of Appendix D.

CAUTION

USE EXTREME CARE WHEN HANDLING TEST ARTICLES.
CLEAN WHITE COTTON GLOVES MUST BE WORN
WHEN HANDLING TEST ARTICLES.

B. Record the Part Number (P/N) and Serial Number (S/N) of the Test Article in Section 7.2 of Appendix D.

C. Install Test Article in the Functional Test Fixture per SK683-23504.

D. Record the P/N and S/N of the mating test article (PB) being used for this test in Section 7.2 of Appendix D..

E. Set gap between active and passive flanges (Range = .275 to .325 in.). Record flange gap in Section 7.2 of Appendix D.

F. Setup the Ambient Condition Monitor and verify the capability to monitor ambient temperature, relative humidity, and atmospheric pressure.

NOTE: The Test Setup required to support Functional Test Conduct has been completed. Functional Test Conduct may now be performed.

7.5 FUNCTIONAL PERFORMANCE TEST

7.5.1 *Initial Setup*

A. Verify a PB and a PBN have been installed on the functional test fixture and instrumentation checkout completed.

B. Verify that Boeing Instrumentation and Test Operations personnel are ready to start test.

7.5.2 *DACS Startup*

NOTE: A User's Guide to the manipulation of the executable S/W is located in Appendix C.

A. Verify that the DACS is on and operational.

B. On the Motor Control page, enter/verify the following parameters using the F1 key per the Test Conductor's direction (see Figure C-1):

(1) Bolt serial no.
Nut serial no.
test designation (AMB_FUN)
RPM (0)
torque and load limits (1510, 17500)
direction of travel (in)
no. of revs (0)
start and end cycles (29,29)
recording (off)
data file name (see note below)
control scenario (auto)
fixture load cal value (from cal data sheets)
torque cal value (from cal data sheets)

Note: Data file name will be as follows:
For PBN: PBNxxxxA - where xxxx is the SN of the PBN Assembly

NOTE: If both a Flight PB and PBN are being tested, the PB SN will be used.

(2) Record Bolt and Nut S/N's, Data File Name and Cal values in the appropriate Table in Section 7.4 of Appendix D.

C. If the Absolute Revs value is other than zero, zero it using the F3 key.

D. Zero fixture load and torque cells using F5 and F8 keys respectively on the Motor Control Screen.

7.5.3 *Functional Test Run*

NOTE: This section provides the steps for running the functional test.

A. Verify the test area is clear of all nonessential personnel and all other cautions and/or warnings have been adhered to.

B. Record ambient conditions of temperature, humidity, and atmospheric pressure in Section 7.5 of Appendix D and verify within limits.

C. Start the data recording.

EMERGENCY MOTOR STOP

USE F7 TO STOP MOTOR MOVEMENT AT ANY TIME (MANUAL OR AUTO MOTOR MOVEMENT MODES)

D. Start the functional test by pressing F2.

E. At the completion of Cycle 29, verify the system is not in the User Input mode and press <CTRL><C> to exit the executable S/W and return to MS-DOS.

7.6 DATA VERIFICATION

NOTE: This section provides the steps for verifying the data is satisfactory following the functional test.

A. Transfer recorded data from the DACS to the Data Reduction Center.

B. Record the Max Loads and Max Torque values for each cycle in Section 7.6 of Appendix D.

C. Verify that the Max Loads and Max Torque values meet the requirements as defined in Section 3.2D of this document.

7.7 DACS SAFING AND POWER DOWN

NOTE: This section provides the steps for safing and powering down the DACS, if required.

A. Verify that the test data has been downloaded from the DACS to floppy disk and labeled per Appendix C.

B. Power off the DACS: (Only if no more testing is to be done)

(1) Power off the DACS Cabinet including the extender chassis and main chassis.

(2) Remove the QA version of the executable S/W.

(3) Power off the PC and motor control power supplies.

C. Record data in Section 7.7 of Appendix D.

7.8 FUNCTIONAL TEST TEARDOWN

NOTE: This Section contains the steps required to remove the test article(s) the Functional Test Setup.

A. Verify that all power has been removed from the test setup.

CAUTION

**USE EXTREME CARE WHEN HANDLING TEST ARTICLES.
CLEAN WHITE COTTON GLOVES MUST BE WORN
WHEN HANDLING TEST ARTICLES.**

B. Remove the Test Article from the Functional Test Fixture (reference SK683-23504).

C. Perform an external visual inspection of the test article. Record any comments in Section 7.8 of Appendix D.

D. Package Test Article for movement to stores.

NOTE: The Functional Test Fixture will remain in place. Only the PBN Test Article will be transported to stores.

NOTE: The Test Teardown required following Functional Test Conduct has been completed.

7.9 INSTRUMENTATION AND TEST FIXTURE SET UP / CHECKOUT

7.9.1 *Set up*

A. Record facility location in Appendix D.

NOTE: This section contains the steps for performance of the PBN Functional Test / Thermal Vac Test Instrumentation, Motor Control System, and Test Fixture setup. Perform this set up for initial Fixture configuration and for Fixture changes only. Software operation is defined in Appendix C.

B. Position the Thermal Vac Test Fixture Assembly, SK683-23620, in the planned test area. Record Fixture Assembly Part Number (P/N) and serial number (S/N) in Appendix D.

C. Install Test Support Equipment (TSE), bolt and nut per SK683-23504.

D. Setup the PC Control and Instrumentation System per drawing SK683-23510.

E. Connect the cables from the PB Actuator to the power control rack per SK683-23510.

7.9.2 *Checkout*

A. Refer to Appendix ”C” for software operations.

B. Input / verify the calibration values for the fixture load and torque for the given Functional Fixture / Bolt. (Calibration values available from Calibration Data Sheets).

C. Power on the DACS and load the executable S/W. Record name and revision level of S/W in Appendix D.

(1) Set up and initialize DACS as applicable per Appendix C.

(2) Open Bolt File Name and set Bolt information.

(3) Zero the fixture load.

(4) Apply compressive load to Fixture Load Cell, verify a negative reaction

(5) Apply the required precision shunt resistance (from Calibration Data Sheet) to the fixture load cell across - EXC and - SIG pins. Note, use the test points

located on the Load Cell Cable at the back of the Test Rack, per SK683-23510.

(6) Verify the displayed value for the load is of the proper polarity and magnitude (Range = value from Calibration Data Sheet +/- 100 lbs.).

(7) Remove the precision shunt resistance from the fixture load cell.

(8) Zero the torque offset.

(9) Manually apply a torque to the torque cell.

(10) Verify the displayed value for the given Fixture / Bolt is of proper polarity and magnitude for the torque cell measurement in comparison to Torque Cell Digital Display.

(11) Remove the applied torque from the torque cell.

(12) Zero load and torque offsets.

(13) Zero the Rev Positions.

(14) Verify the operation of Manual Motor Movement per Appendix C.

(15) Verify the operation of Auto Motor Movement per Appendix C.

(16) Verify the operation of Emergency Motor Stop function.

(17) Verify that data was written to the DACS hard disk under the data file name input from above.

(18) Remove TSE Bolt and Nut from Test Fixture.

(19) Repeat steps C(1) through C(18) for each Thermal Vac Fixture / Bolt set up.

7.10 TEST ARTICLE SETUP

A. Acquire all equipment required for this section as specified in Appendix A. Record required equipment P/Ns and S/Ns in Appendix D. Verify that the DACS equipment is in calibration and record required calibration dates in Appendix D.

CAUTION

USE EXTREME CARE WHEN HANDLING TEST ARTICLES. CLEAN WHITE COTTON GLOVES MUST BE WORN WHEN HANDLING TEST ARTICLES.

B. Record the Part Number (P/N) and Serial Number (S/N) of the Test Article in Appendix D.

C. Center the encapsulated nut and washers within the cutout in the nut plate prior to installation in test fixture. Take care not to move encapsulated nut relative to nut plate during or after installation. Verify washers are not trapped between nut plate and Test fixture by taking a .01 inch shim to confirm that the nut plate is flush with the test fixture.

D. Install Test Article in the Test Fixture per SK683-23504.

E. Record the P/N and S/N of the mating test article (Powered Bolt (PB) being used for this test.

F. Set gap between active and passive flanges (Range = .275 to .325 in.). Record flange gap in Appendix D.

G. Verify that the DACS is on and operational.

H. Setup the Ambient Condition Monitor and verify the capability to monitor ambient temperature, relative humidity, and atmospheric pressure.

7.11 FUNCTIONAL PERFORMANCE TEST

7.11.1 *Initial Setup*

A. Verify a PB and a PBN have been installed on the functional test fixture and instrumentation checkout completed.

B. Verify that Boeing Instrumentation and Test Operations personnel are ready to start test.

7.11.2 *DACS Startup*

NOTE: A User's Guide to the manipulation of the executable S/W is located in Appendix C.

A. Verify that the DACS is on and operational.

B. Record Bolt and Nut Serial Numbers,(SN's), Data File name in the appropriate Table in Appendix D.

C. Zero Absolute Revs per Appendix C.

D. Zero fixture load and torque cells.

E. Verify Bolt info: Fixture #, Bolt SN #, Start Cycle, End Cycle Load Limit=17,500 Lbs., and Torque Limit=1510 In-Lbs. for cycle #29.

7.11.3 *Functional Test Run*

NOTE: This section provides the steps for running the functional test.

A. Verify the test area is clear of all nonessential personnel and all other cautions and/or warnings have been adhered to.

B. Record ambient conditions of temperature, humidity, and atmospheric pressure in Appendix D and verify within limits.

USE F9 TO STOP ALL MOTOR MOVEMENT AT ANY TIME (MANUAL OR AUTO MOTOR MOVEMENT MODES).

C. Start the functional test, cycle number 29.

D. At the completion of Cycle 29, verify all motors have stopped. If there is no additional testing required, exit the program per Appendix C.

7.12 DATA VERIFICATION

NOTE: This section provides the steps for verifying the data is satisfactory following the functional test.

A. Record the Max Loads and Max Torque values for each cycle in Appendix D.

B. Verify that the Max Loads and Max Torque values meet the requirements as defined in Section 3.2D of this document. Record data in Appendix D.

7.13 DACS SAFING AND POWER DOWN

NOTE: This section provides the steps for safing and powering down the DACS, if no further testing is required.

A. Verify that the test data has been downloaded from the DACS to floppy disk and the disk has been labeled per Appendix C.

B. Power off the DACS: (Only if no more testing is to be done)

(1) Power off the DACS Cabinet.

(2) Power off the PC and motor control power supplies.

7.14 FUNCTIONAL TEST TEARDOWN

NOTE: This Section contains the steps required to remove the test article(s) from the Functional Test Setup, if no additional testing is required.

A. Verify that all power has been removed from the test setup.

CAUTION

**USE EXTREME CARE WHEN HANDLING TEST ARTICLES.
CLEAN WHITE COTTON GLOVES MUST BE WORN
WHEN HANDLING TEST ARTICLES.**

B. Remove the Test Article from the Functional Test Fixture (reference SK683-23504).

C. Perform an external visual inspection of the test article. Record any comments in Appendix D.

D. If the Test Article has completed all Acceptance Tests and has met all the requirements of this document, then the following steps shall be performed prior to shipment to stores in order to minimize on-orbit contamination due to dry film lubricant:

(1) Wipe the internal threads and front conical face of the Powered Bolt Nut using a lint-free cloth wipe moistened with isopropyl or ethyl alcohol. The cloth may be inserted into the Powered Bolt Nut to facilitate this process. Clean, dry air or nitrogen may be blown into the nut to help remove loose particles. Cleaning should continue until individual particles of lubricant (visible without magnification) are not transferred to the wipe. Discoloration of the wipe is acceptable.

(2) Inspect threads to ensure any foreign particles from this process do not remain in the Powered Bolt Nut.

E. Package the Test Article appropriately for shipment to next applicable operation.

NOTE: The Functional Test Fixture will remain in place. Only the PBN Test Article will be transported.

SECTION 8, PERFORMANCE RETEST / FAULT ISOLATION TESTS

8.1 FUNCTIONAL RETEST SEQUENCE

NOTE: This section has been added to provide a retest sequence for Powered Bolt Nuts that have previously completed testing, and have subsequently been reworked/reassembled to per drawing configuration.

This section applies to Functional testing using the Thermal Vacuum Test Fixture SK683-23620 per Sections 4.9 through 4.14 of this procedure only, and does not apply to Test Fixture SK683-13741 (Sections 4.3.1 through 4.8).

A. Perform Section 4.9 if required per TC (change to test setup).

B. Perform Test Article Setup per Section 4.10.

C. Perform Functional Performance Test per Section 4.11.

D. Verify requirements per Section 4.12.

E. Power Down per Section 4.13

F. Teardown per Section 4.14.

8.2 TORQUE PERFORMANCE RETEST / ISOLATION SEQUENCE

Notes:

This section applies to 683-13503-2 and -3 Assemblies only.

This section has been added to provide a standard fault isolation sequence for test articles that fail the life cycle performance test criteria as measured by torque (Ref. Section 3.2B).

Record required data on a separate data sheet in a form consistent with that of Appendix D. Attach to Appendix D at completion of test.

8.2.1 *8.2.1 Data Review*

Determine if the Max. Torque to achieve the target preload for the last 10 cycles (cycles 12-21) has been increasing on subsequent cycles. Record data on UEP.

(1) For test articles which show as increase in torque, continue with Section 8.2.2 to isolate whether the Powered Bolt Assembly, its mating Powered Bolt Nut Assembly or both are responsible for the torque increase (degradation in performance).

(2) For test articles that do not show an increase in torque and the torque did not increase more than 100 in-lbs from the first cycle under vacuum, disposition as acceptable and continue Acceptance Test processing per planned events.

8.2.2 *Retest Procedure*

NOTE: This section applies to thermal vacuum testing using Thermal Vacuum Test Fixture SK683-23620 per Sections 5.9 through 5.13 of this procedure. It does not apply to test fixture SK683-13741 per Sections 5.3.1 through 5.8 of this procedure.

A. Perform Section 5.9 if required per TC (i.e. change to test setup)

B. Perform Test Article Setup per Section 5.10. The mating Powered Bolt shall be SK683-23647 (Powered Bolt Assembly, Acceptance Test Support Equipment).

C. Perform Thermal Vacuum Test per Section 5.11.1 through 5.11.3 step K.
Note: This repeats cycles 2-21 of the acceptance testing.

D. Verify Acceptance Test requirements per Section 3.2A. If Acceptance Criteria per Section 3.2A is not met, write UER.

E. Verify Acceptance Test requirements per Section 3.2B.

If Acceptance Criteria per Section 3.2B is not met, determine if the Max. Torque to achieve the target preload for the last 10 cycles (cycles 12-21) has been increasing on subsequent cycles.

(1) If the Test Article is showing increasing Torque on subsequent cycles, write UER and reject unit.

(2) If the Test Article does not show an increase in Torque on subsequent cycles and the torque did not increase more than 100 in-lbs from the first cycle under vacuum for this test, the unit is acceptable and may continue Acceptance Test processing.

F. Repressurize test chamber and teardown per Section 5.13 as required by TC.

8.3 TORQUE PERFORMANCE RETEST

Notes:

This section has been added to provide a standard test following relubrication of encapsulated nuts.
Record required data on a separate data sheet in a form consistenet with Appendix D. Attach to Appendix D at completion of test.

8.3.1 *Sliding Friction Test*

Note:

To insure the nut is free to translate laterally this simple test verifies that the nut will slide smoothly along the nut-plate without tipping beyond the 0.8 degrees allowed by the spherical washers.

A. Burnish dry film lube on washers by sliding nut and washers through out the range of travel allowed by the keyhole slot in the nut plate. Perform a minimum of five rotations in the clockwise direction and five rotations in the counter clockwise direction.

B. Center nut and washers in keyhole slot of nut plate. While securing the nut plate, slowly apply a lateral load (parallel to the faying surface of the nut plate) near the .95 diameter end of the encapsulated nut. Slowly increase force. Verify that nut does not tip beyond the 0.8 degree angle allowed by the spherical washers before sliding motion is initiated. Tipping is evidenced by gapping between the nut and washer such that a .005 shim may be shanked. Verify smooth sliding nature of the nut and washers until end of travel. Repeat this test for both tangential and radial directions.

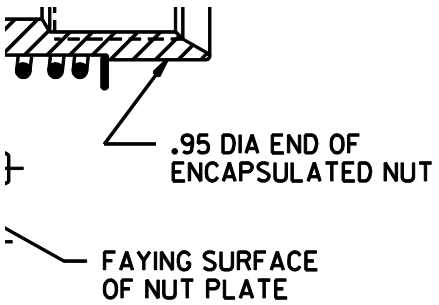

FIGURE 8-1 POWER BOLT NUT ASSY

8.3.2 *Retest Procedure.*

Note:

This section applies to thermal vacuum testing using Thermal Vacuum Test Fixture SK683-23620 per section 5.9 through 5.13 of this procedure. It does not apply to SK683-13471 per section 5.3.1 through 5.8 of this procedure.

A. Perform Section 5.9 if required, per TC to change test set up.

B. Perform Test Article Setup per section 5.10. Additionally, center the encapsulated nut and washers within the cutout in the nut plate prior to installation in test fixture. Take care not to move encapsulated nut relative to nut plate during or after installation. Verify washers are not trapped between nut plate and Test fixture by taking a .01 inch shim to confirm that the nut plate is flush with the test fixture. The mating Powered Bolts shall be SK683-23647 Powered Bolt Assy, Acceptance Test Support Equipment.

C. Perform Thermal Vacuum Test per section 5.11.1 through 5.11.13 step K.

Note:

This repeats cycles 2-21 of the acceptance test.

D. Verify Acceptance Test Requirements per section 3.2A. If Acceptance Requirements of 3.2A are not met, write UER.

E. For cycles 17through 21, verify maximum torque to achieve target preload < 800 in*lb and the average increase is < 10 in*lb/cycle.

F. Repressurize test chamber and teardown per section 5.13 as required by TC.

(This Page Intentionally Blank)

SECTION 9, POWERED BOLT NUT ACCEPTANCE TEST

This section has been added to Acceptance Test Powered Bolt Nuts for commercial applications.

9.1 FUNCTIONAL TEST – CYCLE 0

9.1.1 *General Notes*

A. This Section of the Test Procedure performs the first Functional Test on the PBN Test Articles.

B. All manual data recording and procedure step buyoffs are to be recorded in Appendix D or similar data sheets provided by the Test Conductor. If multiple Flight PBN's are being accepted together, data must be recorded in each test articles' Data Sheets

C. Sections 9.1.3 and 9.1.4 are not required if the test fixture has already been checked out in its current location. Section 9.1.4 (all or part) may be performed at any time at IE's or TC's direction.

9.1.2 *Facility Readiness*

Record facility location.

9.1.3 *Instrumentation and Test Fixture Setup - Cycle 0*

NOTE: This section contains the steps for performance of the PBN Functional Test / Thermal Vac Test Instrumentation, Motor Control System, and Test Fixture setup. Perform this set up for initial Fixture configuration and for Fixture changes only. Software operation is defined in Appendix C.

A. Position the Thermal Vac Test Fixture Assembly, SK683-23620, in the planned test area. Record Fixture Assembly Part Number (P/N) and serial number (S/N).

B. Install Test Support Equipment, (TSE), bolt and nut per SK683-23504.

C. Setup the PC Control and Instrumentation System per drawing SK683-23510.

D. Connect the cables from the PB Actuator to the power control rack per SK683-23510.

9.1.4 *Checkout*

Refer to Appendix C for software operations.

A. Input / verify the calibration values for the fixture load and torque for the given Functional Fixture / Bolt. (Calibration values available from Calibration Data Sheets).

B. Power on the DACS and load the executable S/W. Record name and revision level of software.

(1) Set up and initialize DACS as applicable per Appendix C (reference C.10 through C.12).

(2) Open Bolt File Name and set Bolt information.

(3) Zero the fixture load.

(4) Apply compressive load to Fixture Load Cell, verify a negative reaction

(5) Apply the required precision shunt resistance (from Calibration Data Sheet) to the fixture load cell across - EXC and - SIG pins. Note, use the test points located on the Load Cell Cable at the back of the Test Rack, per SK683-23510.

(6) Verify the displayed value for the load is of the proper polarity and magnitude (Range = value from Calibration Data Sheet +200 lbs, - 100 lbs.).

(7) Remove the precision shunt resistance from the fixture load cell.

(8) Zero the torque offset.

(9) Manually apply a torque to the torque cell.

(10) Verify the displayed value for the given Fixture / Bolt is of proper polarity and magnitude for the torque cell measurement in comparison to Torque Cell Digital Display.

(11) Remove the applied torque from the torque cell.

(12) Zero load and torque offsets.

(13) Zero the Rev Positions.

(14) Verify the operation of Manual Motor Movement per Appendix C (C.14.B).

(15) Verify the operation of Emergency Motor Stop function.

(16) Verify the operation of Auto Motor Movement per Appendix C (C. 14.C).

(17) Verify that data was written to the DACS hard disk under the data file name input from above.

(18) Remove TSE Bolt and Nut from Test Fixture.

9.1.5 *Test Article Setup*

A. Acquire all equipment required for this section as specified in Appendix A. Record required equipment P/Ns and S/Ns. Verify that the DACS equipment is in calibration and record required calibration dates.

CAUTION

USE EXTREME CARE WHEN HANDLING TEST ARTICLES. CLEAN WHITE COTTON GLOVES MUST BE WORN WHEN HANDLING TEST ARTICLES.

B. Perform Bolt/Nut inspection and checkout per the following: (This step performs a visual inspection and thread engagement check of the Powered Bolt Nut prior to installation into the Functional or Thermal Vacuum Fixture.)

(1) Record the Part Number (P/N) and Serial Number (S/N) of the Test Article.

(2) If a Flight Powered Bolt is being tested with this Powered Bolt Nut, perform Powered Bolt inspection per D683-85130-7. If a Test Support Bolt is being used, go to next step.

(3) Record the P/N and S/N of the mating test article (Powered Bolt (PB) being used for this test.

(4) Install SK683-23656-1 Hub Assembly onto Powered Bolt motor drive flange using 683-13453 (or SK683-13453-1) Threaded Collar. Tighten Collar to hand tight only.

(5) Hand turn Hub Assy shaft in a clockwise direction. Hub should turn freely. Powered Bolt threads will start out of lower housing.

(6) Continue turning Hub for approximately 22 revs until Bolt is fully extended. Carefully inspect bolt threads for abnormalities, especially the thread lead.

(7) Remove Powered Bolt Nut from shipping container and packaging material. Perform visual inspection and record results.

(8) Use certified Thread Gage P/N Threadwell 5/8-18UNF3B to verify threads on Powered Bolt Nut. (NOTE: "Go" end of tool should thread in smoothly, do not use "No Go" end of tool for this test.) Record results.

(9) Align Powered Bolt Nut with Powered Bolt and hand turn in a clockwise direction as required to engage Bolt. Nut should turn freely.

(10) Continue turning approximately 7 turns (Do NOT allow Nut to make contact with the Bolt Housing). Note any visual abnormalities and/or turning resistance.

(11) Unthread Nut from Bolt in a counterclockwise direction. Note any visual abnormalities and/or turning resistance.

(12) Hand turn Hub Shaft in a counterclockwise direction to retract threaded bolt back into Powered Bolt Lower Housing. Continue turning Hub for approximately 23 revs until Bolt threads out of follower (Bolt will start to ratchet). Note any visual abnormalities and/or turning resistance.

(13) Remove Hub Assembly and Threaded Collar from Powered Bolt.

C. Center the encapsulated nut and washers within the cutout in the nut plate prior to installation in test fixture. Take care not to move encapsulated nut relative to nut plate during or after installation. Verify washers are not trapped between nut plate and Test fixture by taking a .01 inch shim to confirm that the nut plate is flush with the test fixture.

D. Install Test Article in the Test Fixture per SK683-23504.

E. Record the S/N of the mating test article Powered Bolt (PB) being used for this test in Appendix D.

F. Set gap between active and passive flanges (Range = .275 to .325 in.). Record flange gap in Section 4.4 of Appendix D.

G. Verify that the DACS is on and operational (reference Appendix C.10 through C.14.B).

H. Setup the Ambient Condition Monitor and verify the capability to monitor ambient temperature, relative humidity, and atmospheric pressure.

I. Set up Thermal monitoring per Appendix C.14.D.

9.1.6 *Functional Performance Test*

A. Verify a PB and a PBN have been installed on the functional test fixture and instrumentation checkout completed.

B. Verify that Boeing Instrumentation and Test Operations personnel are ready to start test.

NOTE: A User's Guide to the manipulation of the executable S/W is located in Appendix C.

C. Verify that the DACS is on and operational.

D. Record Bolt and Nut Serial Numbers (SN's), Data File name.

E. Zero Absolute Revs per Appendix C.

F. Zero fixture load and torque cells.

G. Verify Bolt info: Fixture #, Bolt SN, Start Cycle, End Cycle, Load Limit (19300 lbs.), and Torque Limit (1600 in-lbs.) for Cycle 0. Record values.

H. Verify the test area is clear of all nonessential personnel and all other cautions and/or warnings have been adhered to.

I. Record ambient conditions of temperature, humidity, and atmospheric pressure and verify within limits.

USE F9 TO STOP ALL MOTOR MOVEMENT AT ANY TIME (MANUAL OR AUTO MOOR MOVEMENT MODES).

J. Start the functional test and record the start time.

K. At the completion of Cycle 0, verify all motors have stopped. If there is no additional testing required, exit the program per Appendix C.

9.1.7 *Data Verification*

NOTE: This section provides the steps for verifying the data is satisfactory following the functional test.

A. Record the Max Loads and Max Torque values for each cycle.

B. Verify that the Max Loads and Max Torque values meet the requirements as defined in Section 3.2A of this document.

9.1.8 *DACS Safing and Power Down*

NOTE: This section provides the steps for safing and powering down the DACS, if no further testing is required. If testing is to continue, skip to next section.

A. Verify that the test data has been downloaded from the DACS to floppy disk and the disk has been labeled per Appendix C.

B. Power off the DACS: (Only if no more testing is to be done)

(1) Power off the DACS Cabinet.

(2) Power off the PC and motor control power supplies.

9.1.9 *Functional Test Teardown*

NOTE: This Section contains the steps required to remove the test article(s) from the Functional Test Setup, if no additional testing is required. If testing is to continue, skip to next section.

A. Verify that all power has been removed from the test setup.

CAUTION

USE EXTREME CARE WHEN HANDLING TEST ARTICLES.
CLEAN WHITE COTTON GLOVES MUST BE WORN
WHEN HANDLING TEST ARTICLES.

B. Remove the Test Article from the Functional Test Fixture (reference SK683-23504).

C. Perform an external visual inspection of the test article. Record any comments.

D. Package the Test Article appropriately for the next test or for shipment.

NOTE: The Functional Test Fixture will remain in place. Only the PBN Test Article will be transported. If storage of the test articles is required, they will be stored in an appropriate DCA location.

9.2 FUNCTIONAL TEST - CYCLE 1

9.2.1 *General Notes*

A. This Section of the Test Procedure performs the Ambient Functional Test on the PBN Test Articles prior to thermal vacuum testing.

B. All manual data recording and procedure step buyoffs are to be recorded in Appendix D or similar data sheet provided by the Test Conductor. If multiple Flight PBN's are being accepted together, data must be recorded in each test articles' Data Sheets

C. Sections 9.2.2 is not required if the test fixture has already been checked out in its current location. Section 9.2.3 is not required if testing is continuing from previous section and the test article is already installed in the fixture.

9.2.2 *Setup*

A. Position the Thermal Vac Test Fixture Assembly, SK683-23620, in the planned test area. Record Fixture Assembly Part Number (P/N) and serial number (S/N).

B. Setup the PC Control and Instrumentation System per drawing SK683-23510.

C. Connect the cables from the PB Actuator to the power control rack per SK683-23510.

9.2.3 *Test Article Setup*

A. Acquire all equipment required for this section as specified in Appendix A. Record required equipment P/Ns and S/Ns. Verify that the DACS equipment is in calibration and record required calibration dates.

CAUTION

**USE EXTREME CARE WHEN HANDLING TEST ARTICLES.
CLEAN WHITE COTTON GLOVES MUST BE WORN
WHEN HANDLING TEST ARTICLES.**

B. Verify the Part Number (P/N) and Serial Number (S/N) of the Test Article.

C. Center the encapsulated nut and washers within the cutout in the nut plate prior to installation in test fixture. Take care not to move encapsulated nut relative to nut plate during or after installation.

D. Install Test Article in the Test Fixture per SK683-23504. Verify washers are not trapped between nut plate and Test fixture by taking a .01 inch shim to confirm that the nut plate is flush with the test fixture.

E. Record the S/N of the mating test article Powered Bolt (PB) being used for this test.

F. Set gap between active and passive flanges (Range = .275 to .325 in.). Record flange gap.

G. Verify that the DACS is on and operational (reference Appendix C.10 through C.14.B).

H. Setup the Ambient Condition Monitor and verify the capability to monitor ambient temperature, relative humidity, and atmospheric pressure.

I. Set up Thermal monitoring per Appendix C.14.D.

J. Verify a PB and a PBN have been installed on the functional test fixture and instrumentation checkout completed.

K. Verify that Boeing Instrumentation and Test Operations personnel are ready to start test.

9.2.4 *DACS Startup*

NOTE: A User's Guide to the manipulation of the executable S/W is located in Appendix C.

A. Verify that the DACS is on and operational.

B. Record Bolt and Nut Serial Numbers, (SN's), Data File name in the appropriate Table on the Data Sheet.

C. Zero Absolute Revs per Appendix C.

D. Zero fixture load and torque cells.

E. Verify Bolt info: Fixture #, Bolt SN, Start Cycle, End Cycle, Load Limit (19300 lbs.), and Torque Limit (1600 in-lbs.) for Cycle 1. Record values.

9.2.5 *Functional Test Run*

A. Verify the test area is clear of all nonessential personnel and all other cautions and/or warnings have been adhered to.

B. Record ambient conditions of temperature and humidity and verify within limits.

EMERGENCY MOTOR STOP

USE F9 TO STOP ALL MOTOR MOVEMENT AT ANY TIME (MANUAL OR AUTO MOOR MOVEMENT MODES).

C. Start the functional test and record the start time.

D. At the completion of Cycle 1, verify all motors have stopped. If there is no additional testing required, exit the program per Appendix C.

9.2.6 *Data Verification*

NOTE: This section provides the steps for verifying the data is satisfactory following the functional test.

A. Record the Max Loads and Max Torque values for each cycle.

B. Verify that the Max Loads and Max Torque values meet the requirements as defined in Section 3.2A of this document.

C. Verify that the test data has been downloaded from the DACS to floppy disk and the disk has been labeled per Appendix C.

9.2.7 *DACS Safing and Power Down*

NOTE: This section provides the steps for safing and powering down the DACS, if no further testing is required. If continuing on with thermal vacuum testing, proceed to Section 9.3.

A. Verify that the test data has been downloaded from the DACS to floppy disk and the disk has been labeled per Appendix C.

B. Power off the DACS: (Only if no more testing is to be done)

(1) Power off the DACS Cabinet.

(2) Power off the PC and motor control power supplies.

9.2.8 *Functional Test Teardown*

NOTE: This Section contains the steps required to remove the test article(s) from the Functional Test Setup, if no additional testing is required.

A. Verify that all power has been removed from the test setup.

CAUTION

USE EXTREME CARE WHEN HANDLING TEST ARTICLES. CLEAN WHITE COTTON GLOVES MUST BE WORN WHEN HANDLING TEST ARTICLES.

B. Remove the Test Article from the Functional Test Fixture (reference SK683-23504).

C. Perform an external visual inspection of the test article. Record any comments.

D. Package the Test Article appropriately for the next test or for shipment.

NOTE: The Functional Test Fixture will remain in place. Only the PBN Test Article will be transported. If storage of the test articles is required, they will be stored in an appropriate location.

9.3 VACUUM ACCEPTANCE TEST

9.3.1 *General Notes*

A. This Section of the Test Procedure performs the Vacuum Acceptance Test on the PBN.

B. Sections 9.3.2 and 9.3.3 are not required if the test fixture has already been checked out in its current location. Section 9.3.3 (all or part) may be performed at any time at IE's or TC's direction.

C. Section 9.3.4 is not required if Test Article is already installed from previous section.

9.3.2 *Setup*

A. Verify / Record facility location of vacuum chamber.

NOTE: This section contains the steps for performance of the PB Functional Test / Thermal Vac Test Instrumentation, Motor Control System, and Test Fixture setup. Perform this set up for initial Fixture configuration and for Fixture changes only. Software operation is defined in Appendix C.

B. Position the Thermal Vac Test Fixture Assembly, SK683-23620, in the planned test area. Record Fixture Assembly Part Number (P/N) and serial number (S/N).

C. Install Test Support Equipment (TSE), bolt and nut per SK683-23504.

D. Setup the PC Control and Instrumentation System per drawing SK683-23510.

E. Connect the cables from the PB Actuator to the power control rack per SK683-23510.

9.3.3 *Checkout*

A. Refer to Appendix C for software operations.

B. Input / verify the calibration values for the fixture load and torque for the given Functional Fixture / Bolt. (Calibration values available from Calibration Data Sheets).

C. Power on the DACS and load the executable S/W. Verify name and revision level of S/W.

(1) Set up and initialize DACS as applicable per Appendix C.

(2) Open Bolt File Name and set Bolt information.

(3) Zero the fixture load.

(4) Apply compressive load to Fixture Load Cell, verify a negative reaction

(5) Apply the required precision shunt resistance (from Calibration Data Sheet) to the fixture load cell across - EXC and - SIG pins. Note, use the test points located on the Load Cell Cable at the back of the Test Rack, per SK683-23510.

(6) Verify the displayed value for the load is of the proper polarity and magnitude (Range = value from Calibration Data Sheet +/- 100 lbs.).

(7) Remove the precision shunt resistance from the fixture load cell.

(8) Zero the torque offset.

(9) Manually apply a torque to the torque cell.

(10) Verify the displayed value for the given Fixture / Bolt is of proper polarity and magnitude for the torque cell measurement in comparison to Torque Cell Digital Display.

(11) Remove the applied torque from the torque cell.

(12) Zero load and torque offsets.

(13) Zero the Rev Positions.

(14) Verify the operation of Manual Motor Movement per Appendix C.

(15) Verify the operation of Auto Motor Movement per Appendix C.

(16) Verify the operation of Emergency Motor Stop function.

(17) Verify that data was written to the DACS hard disk under the data file name input from above.

(18) Remove TSE Bolt and Nut from Test Fixture.

9.3.4 *Test Article Setup*

A. Acquire all equipment required for this section as specified in Appendix A. Record required equipment P/Ns and S/Ns. Verify that the DACS equipment is in calibration and record required calibration dates.

CAUTION

USE EXTREME CARE WHEN HANDLING TEST ARTICLES. CLEAN WHITE COTTON GLOVES MUST BE WORN WHEN HANDLING TEST ARTICLES.

B. Verify / Record the Part Number (P/N) and Serial Number (S/N) of the Test Article.

C. Center the encapsulated nut and washers within the cutout in the nut plate prior to installation in test fixture. Take care not to move encapsulated nut relative to nut plate during or after installation.

D. Install Test Article in the Test Fixture per SK683-23504. Verify washers are not trapped between nut plate and Test fixture by taking a .01 inch shim to confirm that the nut plate is flush with the test fixture.

E. Verify / Record the P/N and S/N of the mating test article (Powered Bolt (PB) being used for this test.

F. Set gap between active and passive flanges (Range = .275 to .325 in.). Record flange gap.

G. Verify that the DACS is on and operational (reference Appendix C.10 through C.14.B).

9.3.5 *Vacuum Functional Test*

A. Verify that a PB and a PBN have been installed on the vacuum test fixture and instrumentation checkout completed.

B. Verify that Boeing Instrumentation and Test Operations personnel are ready to start test.

C. Clear test area of all nonessential personnel.

WARNING

PERSONNEL PARTICIPATING IN THE ALCOHOL CLEANING OF THE TEST FIXTURE WILL ENSURE THE FOLLOWING:

A. PROPER VENTILATION IS AVAILABLE
B. NO IGNITION SOURCES ARE PRESENT
C. AN O2 MONITOR IS ON AND OPERATIONAL

D. Clean the test fixture with 200 proof de-natured alcohol and secure chamber.

NOTE: If Functional Test (Cycle 1) has just been completed and DACS is still on and operational, skip the next step and proceed to Section 9.3.6.

A User's Guide to the manipulation of the executable S/W is located in Appendix C.

E. Verify that the DACS is on and operational (reference steps in Appendix C.10 through C.14.B).

9.3.6 *Test Conduct*

NOTE: This section provides the steps for running the Vacuum test cycles.

EMERGENCY MOTOR STOP

USE F9 TO STOP ALL MOTOR MOVEMENT AT ANY TIME (MANUAL OR AUTO MOOR MOVEMENT MODES).

A. Prepare DACS for chamber depressurization as follows:

(1) Power down and/or disconnect power to heaters

(2) Power down and/or disconnect power to lights/lamps inside chamber.

B. Reduce chamber pressure to a maximum of $1x10^{-4}$ Torr. Record start time and time that chamber reaches $1x10^{-4}$ Torr.

NOTE: The temperature of the Bolt housing will be taken from thermocouples Tx001. The temperature of the Bolt flange will be taken from thermocouple Tx002. The temperature of the Nut will be taken from thermocouple Tx003. The temperature of Nut flange will be taken from Tx004. In all cases the ”x” is the position number of the fixture.

C. When vacuum chamber is at $1x10^{-4}$ Torr, power on the DACS and load the executable S/W per the following:

(1) Turn on Motor Control power supplies.

(2) Set up and initialize DACS as applicable per Appendix C, if required.

(3) Open Set Bolt Info and set Bolt information for cycles 2 thru 21.

Verify Bolt info: Fixture #, Bolt SN, Start Cycle, End Cycle, Load Limit (19300 lbs.), and Torque Limit (1600 in-lbs.) for Cycles 2 thru 21. Record values.

(4) Zero the fixture load.

(5) Zero the torque offset.

(6) Zero the Rev Positions, if required.

(7) Repeat steps 3 thru 6 for all bolts setup for test.

NOTE: The following cycles (Cycles 2-21) should be completed within 6 hours after reaching a vacuum of $1x10^{-4}$ Torr.

D. Start the Thermal Vac Test, cycles 2-21, and record the start time.

E. Record the Max Loads and Max Torque values for each cycle.

F. Following the completion of cycles 2-21, record the stop time.

G. Verify the requirements as defined in Section 3.2A and 3.2B of this document and record in Appendix D.

H. Repeat steps D thru G for each test article setup for test.

I. After all active test articles have completed their Ambient Vacuum cycles, start cold Thermal Conditioning of Active and Passive flanges per the following. (Record start time):

(1) Start LN2 flow to chamber shrouds (MSFC operation), set cooling cart control to -150F, set flange heater controls to -60F and allow test setup to cool until

bolt housing thermocouple (Tx001) reaches -30F and the Nut (Tx003) reaches -40F. Record cooling start time and time both temperatures are reached.

(2) When both temperatures are achieved (Tx001 at or below -30F and Tx003 at or below -40F), stabilize temperatures and allow setup to soak for minimum of 1 hour. Maintain Test Article temperatures at or below their respective levels. Record soak period start and end times and final Temperature(s).

J. Prepare DACS for the cold vacuum cycle (cycle 22) per the following:

(1) Open Set Bolt Info and set Bolt information for cycle 22.

Verify Bolt info: Fixture #, Bolt SN, Start Cycle, End Cycle, Load Limit (19300 lbs.), and Torque Limit (1600 in-lbs.) for Cycle 22.

(2) Zero the fixture load.

(3) Zero the torque offset.

(4) Zero the Rev Positions, if required.

(5) Run 1 cycle, cycle number 22, record start time on data sheet.

K. Repeat steps (J) 1 thru 5 for all active test articles setup for test.

L. Verify the requirements as defined in Section 3.2A of this document have been met.

M. Verify steps I thru L have been completed for all test articles setup for test

N. Start Hot Thermal Conditioning of Active and Passive flanges per the following (Record start time):

(1) Stop LN2 Flow to chamber shrouds and purge with warm air (+70F +/-20F) (MSFC operation), set cooling cart controls to +180F, set heaters controls to +150 and allow test setup to warm until bolt housing temperature (Tx001) reaches +120F and the Nut temperature (Tx003) reaches +130F. Record warming start time and time both temperatures are reached.

(2) When both temperatures are achieved (Tx001 at or above +120F and Tx003 at or above +130F), set cooling cart to +120F, set active heaters to +120F, passive flange heaters to +130F and allow to soak for minimum of 1 hour. Maintain Test Article temperatures at or above their respective levels.

Record soak start time, soak end time and final temperatures.

O. Prepare DACS for the hot vacuum cycle (cycle 23) per the following:

(1) Open Set Bolt Info and set Bolt information for cycle 23.

Verify Bolt info: Fixture #, Bolt SN, Start Cycle, End Cycle, Load Limit (19300 lbs.), and Torque Limit (1600 in-lbs.) for Cycle 23.

(2) Zero the fixture load.

(3) Zero the torque offset.

(4) Zero the Rev Positions, if required.

(5) Run 1 cycle, cycle number 23, record start time on data sheet.

P. Repeat steps (O) 1 thru 5 for all active test articles setup for test.

Q. Verify the requirements as defined in Section 3.2A of this document have been met.

R. Verify steps N thru Q have been completed for each test article setup for test.

S. Start ambient Thermal Conditioning of Active and Passive flanges per the following. (Record start time in Appendix D):

(1) Set cooling cart controls to -150F and set heater controls to +30F. Allow setup to cool until bolt housing temperature (Tx001) and nut (Tx003) reaches +80F. Record cooling start time and time temperatures reach +80F.

(2) When Tx001 reaches +80F, set active flange heaters to +65F, set cooling cart controls to +70F. If needed, allow setup to continue cooling until passive flange temperature (Tx003) reaches +70F. Maintain bolt housing temperature between +55F and +75F during this period. Adjust cooling cart and heater setpoints as required.

(3) When both temperatures are achieved (Tx001 and Tx003 are between +55F and +75F), set cooling cart to +70F and heaters to +65F. Allow to soak to a minimum of 1 hour (Maintain temperatures between +50F and +75F) Record soak period start time, soak end time and final temperatures.

T. Prepare DACS for the ambient vacuum cycle (cycle 24) per the following:

(1) Open Set Bolt Info and set Bolt information for cycle 24.

Verify Bolt info: Fixture #, Bolt SN, Start Cycle, End Cycle, Load Limit (19300 lbs.), and Torque Limit (1600 in-lbs.) for Cycle 24.

(2) Zero the fixture load.

(3) Zero the torque offset.

(4) Zero the Rev Positions, if required.

(5) Run 1 cycle, cycle number 24, and record start time on data sheet.

U. Repeat steps (T) 1 thru 5 for all active test articles setup for test.

V. Verify the requirements as defined in Section 3.2A of this document have been met.

W. Verify steps S thru V are complete for each test article setup for test.

9.3.7 *Data Verification*

NOTE: This section provides the steps for verifying the data is satisfactory following the functional test.

A. Verify that the Max Loads and Max Torque values meet the requirements as defined in Section 3.2A of this document. Record in Appendix D.

B. Verify that the test data has been downloaded from the DACS to floppy disk and the disk has been labeled per Appendix C.

9.3.8 *Thermal Vacuum Shutdown*

NOTE: This Section contains the steps required to repressurize the vacuum chamber.

A. Power off the DACS:

(1) Power off the motor control power supplies.

(2) Power down and/or disconnect power to heaters and/or lamps inside chamber.

B. Return chamber pressure to ambient (MSFC operation). Record time chamber returns to ambient pressure.

CAUTION

USE EXTREME CARE WHEN HANDLING TEST ARTICLES. CLEAN WHITE COTTON GLOVES MUST BE WORN WHEN HANDLING TEST ARTICLES.

C. Open chamber door.

9.3.9 *Vacuum Test Teardown*

NOTE: This Section contains the steps required to remove the test article(s) from the Vacuum Test Setup, if no additional testing is required. If continuing to Vibration test, skip this step and go to Section 9.4.

A. Verify that all power has been removed from the test setup.

CAUTION

USE EXTREME CARE WHEN HANDLING TEST ARTICLES. CLEAN WHITE COTTON GLOVES MUST BE WORN WHEN HANDLING TEST ARTICLES.

B. Remove thermocouples from bolt housing (ref SK683-23510).

C. Remove the Test Article from the Functional Test Fixture (reference SK683-23504).

D. Perform an external visual inspection of the test article. Record any comments in Appendix D.

E. Package the Test Article appropriately for the next test or for shipment.

NOTE: The Functional Test Fixture will remain in place. Only the PB Test Article will be transported. If storage of the test articles is required, they will be stored in an appropriate DCA location.

9.4 PRE-VIBRATION FUNCTIONAL TEST

The Powered Bolt Nut will be tested functionally, (Cycle number 25), prior to the Vibration Test. The Powered Bolt Nut assemblies will be tested in a 3 axis random vibration test. Functional Test cycles (cycle's number 26-29) will be run after the vibration test.

9.4.1 *General Notes*

The following general notes/guidelines are applicable to the first Vibration Test.

A. This section has been written to support performance of the Vibration Test on the PBN Test Article after the 25th Functional Test. If more than one test articles (i.e. two Powered Bolt Nuts) are to be vibration tested, then they must have been functionally tested prior to this section.

B. All data recording and procedure step buyoffs will be recorded in Appendix D or other TC approved data sheets. If more than one test article is being tested, data must be recorded in each test articles' data sheets.

C. The PBN will not be preloaded during the vibration test.

D. This section has been written to support performance of the Axial Direction Vibration Test first. However, any axis may be done first at the TC's direction.

E. The Vibration Test will be performed in MSFC Building 4619 Room 147, or equivalent, utilizing Vertical and Horizontal Vibration tables.

F. Sections 9.4.3 and 9.4.4 are not required if the test fixture has already been checked out in its current location. Section 9.4.4 (all or part) may be performed at any time at IE's or TC's direction.

G. Section 9.4.5 is not required if Test Article is already installed from previous section.

9.4.2 *Facility Readiness*

A. Record test area location.

B. Verify that the planned accelerometer(s) meets applicable calibration certification requirements.

9.4.3 *Pre Vibe Functional Test*

NOTE: This section contains the steps for performance of the PBN Functional Test / Thermal Vac Test Instrumentation, Motor Control System, and Test Fixture setup. Perform this set up for initial Fixture configuration and for Fixture changes only. Software operation is defined in Appendix C.

A. Position the Test Fixture Assembly, SK683-23620, in the planned test area. Record Fixture Assembly Part Number (P/N) and serial number (S/N).

B. Install Test Support Equipment, (TSE), bolt and nut per SK683-23504.

C. Setup the PC Control and Instrumentation System per drawing SK683-23510.

D. Connect the cables from the PB Actuator to the power control rack per SK683-23510.

9.4.4 *Checkout*

Refer to Appendix C for software operations.

A. Input / verify the calibration values for the fixture load and torque for the given Functional Fixture / Bolt. (Calibration values available from Calibration Data Sheets).

B. Power on the DACS and load the executable S/W. Record name and revision level of S/W.

(1) Set up and initialize DACS as applicable per Appendix C.

(2) Open Bolt File Name and set Bolt information.

(3) Zero the fixture load.

(4) Apply compressive load to Fixture Load Cell, verify a negative reaction

(5) Apply the required precision shunt resistance (from Calibration Data Sheet) to the fixture load cell across - EXC and - SIG pins. Note, use the test points located on the Load Cell Cable at the back of the Test Rack, per SK683-23510.

(6) Verify the displayed value for the load is of the proper polarity and magnitude (Range = value from Calibration Data Sheet +/- 100 lbs.).

(7) Remove the precision shunt resistance from the fixture load cell.

(8) Zero the torque offset.

(9) Manually apply a torque to the torque cell.

(10) Verify the displayed value for the given Fixture / Bolt is of proper polarity and magnitude for the torque cell measurement in comparison to Torque Cell Digital Display.

(11) Remove the applied torque from the torque cell.

(12) Zero load and torque offsets.

(13) Zero the Rev Positions.

(14) Verify the operation of Manual Motor Movement per Appendix C.

(15) Verify the operation of Auto Motor Movement per Appendix C.

(16) Verify the operation of Emergency Motor Stop function.

(17) Verify that data was written to the DACS hard disk under the data file name input from above.

(18) Remove TSE Bolt and Nut from Test Fixture.

9.4.5 *Test Article Setup*

A. Acquire all equipment required for this section as specified in Appendix A. Record required equipment P/Ns and S/Ns. Verify that the DACS equipment is in calibration and record required calibration dates.

CAUTION

USE EXTREME CARE WHEN HANDLING TEST ARTICLES. CLEAN WHITE COTTON GLOVES MUST BE WORN WHEN HANDLING TEST ARTICLES.

B. Record the Part Number (P/N) and Serial Number (S/N) of the Test Article.

C. Center the encapsulated nut and washers within the cutout in the nut plate prior to installation in test fixture. Take care not to move encapsulated nut relative to nut plate during or after installation.

D. Install Test Article in the Test Fixture per SK683-23504. Verify washers are not trapped between nut plate and Test fixture by taking a .01 inch shim to confirm that the nut plate is flush with the test fixture.

E. Record the P/N and S/N of the mating test article (Powered Bolt (PB) being used for this test.

F. Set gap between active and passive flanges (Range = .275 to .325 in.). Record flange gap.

G. Verify that the DACS is on and operational.

H. Setup the Ambient Condition Monitor and verify the capability to monitor ambient temperature, relative humidity, and atmospheric pressure.

9.4.6 *Functional Performance Test – Cycle 25*

A. Verify a PB and a PBN have been installed on the functional test fixture per SK683-23504 and instrumentation checkout completed.

B. Verify that Boeing Instrumentation and Test Operations personnel are ready to start test.

NOTE: A User's Guide to the manipulation of the executable S/W is located in Appendix C.

C. Verify that the DACS is on and operational.

D. Record Bolt and Nut Serial Numbers, (SN's), data file name.

E. Zero Absolute Revs per Appendix C.

F. Zero fixture load and torque cells.

G. Verify Bolt info: Fixture #, Bolt SN, Start Cycle, End Cycle, Load Limit (17500 lbs.), and Torque Limit (1510 in-lbs.) for Cycle 25.

H. Verify the test area is clear of all nonessential personnel and all other cautions and/or warnings have been adhered to.

I. Record ambient conditions of temperature, humidity, and atmospheric pressure and verify within limits.

EMERGENCY MOTOR STOP

USE F9 TO STOP ALL MOTOR MOVEMENT AT ANY TIME (MANUAL OR AUTO MOOR MOVEMENT MODES).

J. Start the functional test, cycle number 25.

K. At the completion of cycle 25, verify all motors have stopped. If there is no additional testing required, exit the program per Appendix C.

L. Repeat steps A thru K for each test article setup for test.

9.4.7 *Data Verification*

NOTE: This section provides the steps for verifying the data is satisfactory following the functional test.

A. Record the Max Loads and Max Torque values for each cycle in Appendix D.

B. Verify that the Max Loads and Max Torque values meet the requirements as defined in Section 3.2D of this document.

C. Verify that the test data has been downloaded from the DACS to floppy disk and the disk has been labeled per Appendix C.

9.4.8 *DACS Safing and Power Down*

NOTE: This section provides the steps for safing and powering down the DACS, if no further testing is required.

A. Verify that the test data has been downloaded from the DACS to floppy disk and the disk has been labeled per Appendix C.

B. Power off the DACS: (Only if no more testing is to be done)

(1) Power off the DACS Cabinet.

(2) Power off the PC and motor control power supplies.

9.4.9 *Pre-vibration Functional Test Teardown*

NOTE: This Section contains the steps required to remove the test article(s) from the Functional Test Setup, if no additional testing is required.

A. Verify that all power has been removed from the test setup.

CAUTION

**USE EXTREME CARE WHEN HANDLING TEST ARTICLES.
CLEAN WHITE COTTON GLOVES MUST BE WORN
WHEN HANDLING TEST ARTICLES.**

B. Remove thermocouples from bolt housing (ref SK683-23510), if required.

C. Remove the Test Article from the Functional Test Fixture (reference SK683-23504).

D. Perform an external visual inspection of the test article. Record any comments in Appendix D.

E. Package the Test Article appropriately for the next test or for shipment.

NOTE: The Functional Test Fixture will remain in place. Only the PBN Test Article will be transported. If storage of the test articles is required, they will be stored in an appropriate storage location.

9.5 VIBRATION ACCEPTANCE TEST

9.5.1 *Axial Direction Vibration Test Setup*

A. Record location of vibration facility.

NOTE: This section contains the steps for performance of the PB Axial Direction Vibration Test setup.

CAUTION

USE EXTREME CARE WHEN HANDLING TEST ARTICLES. CLEAN WHITE COTTON GLOVES MUST BE WORN WHEN HANDLING TEST ARTICLES.

B. Acquire all equipment required for this section as specified in Appendix A. Record required P/Ns and S/Ns in Appendix D for the specified equipment.

C. Perform test setup of the Axial Direction Vibration Test Configuration per the following:

(1) Install the vibration test fixture, SK683-82154, on the Vertical Vibration Test Machine in the Axial Direction orientation per SK683-23505. Torque fixture mounting bolts to 75 ft-lbs. Record torque values.

(2) Prior to installing the Test Article, perform running torque verification on the inserts on the Test Article mounting fixture (SK683-82154). Record torque values (torque 4 in-lbs min.).

(3) Install the Test Article(s) on the vibration test fixture(s) per SK683-23505. Record the number of test articles being tested and their serial numbers. Torque Test Article mounting bolts to xx in-lbs.

(4) Record the end torque value of the test article mounting bolts.

D. Verify the installation of the control accelerometers on the vibration fixture per SK683-23505.

E. Connect the appropriate accelerometer instrumentation cable per SK683-23510.

F. Restrain all instrumentation wiring from vibrating freely during test such that damage to installed instrumentation will not occur.

NOTE: The Test Setup required to support the PBN Axial Direction Vibration Test Conduct has been completed.

9.5.2 *Axial Direction Vibration Test*

A. Clear test area of all nonessential personnel.

B. Verify that Boeing Instrumentation and Test Operations and NASA Vibration Lab personnel are ready to start test.

WARNING

TEST ARTICLE FAILURE COULD RESULT IN FLYING PARTICLES. ALL PERSONNEL MUST REMAIN OUTSIDE OF THE VIBRATION TEST ROOM.

C. Prepare Vibration Control System for Random Vibration test (NASA personnel will perform this operation).

D. Start data recording at Test Conductor's direction and record the start time.

E. Perform vibration per the table below for a duration of 1 minute:

NOTE: The tolerance levels for the Vibration test shall be per SSP 41172.

Frequency (Hz)	Level
20	0.020 g^2 /Hz
20-25	+ 3.0 dB/oct
25	0.025 g^2 /Hz
25-100	+ 6.0 dB/oct
100-300	0.40 g^2/Hz
300-508	- 9.0 dB/oct
508	0.078 g^2 /Hz
508-2000	- 3.0 dB/oct
2000	0.02 g^2/Hz
Composite	13.64 grms

F. Verify data has been recorded. Plot data (NASA Activity). Data plots to be attached to data package.

9.5.3 *Axial Direction Vibration Test Teardown*

NOTE: This section contains the steps for performance of test teardown after the Axial Direction Vibration Test.

CAUTION

USE EXTREME CARE WHEN HANDLING TEST ARTICLES. CLEAN WHITE COTTON GLOVES MUST BE WORN WHEN HANDLING TEST ARTICLES.

A. Remove accelerometer data cable (ref SK683-23505).

B. Perform an external visual inspection of test article(s) and record any comments.

C. Remove the vibration test fixture(s), SK683-82154, from the Vertical Vibration Machine (ref SK683-23505).

NOTE: The Test Teardown required after the Axial Direction Vibration Test Conduct has been completed. Setup for the Radial Direction Vibration Test can now begin.

9.5.4 *Radial Direction Vibration Test Setup*

NOTE: This section contains the steps for performance of the Radial Direction Vibration Test setup.

CAUTION

USE EXTREME CARE WHEN HANDLING TEST ARTICLES. CLEAN WHITE COTTON GLOVES MUST BE WORN WHEN HANDLING TEST ARTICLES.

A. Install the vibration test fixture(s) (with premounted test articles) on the Horizontal Vibration Test Machine in the Radial Direction orientation per SK683-23505. Record mounting bolt torque values.

B. Connect the appropriate accelerometer instrumentation cable per SK683-23510.

C. Restrain all instrumentation wiring from vibrating freely during test such that damage to installed instrumentation will not occur.

NOTE: The Test Setup required to support Radial Direction Vibration Test Conduct has been completed.

9.5.5 *Radial Direction Vibration Test*

A. Clear test area of all nonessential personnel.

B. Verify that Boeing Instrumentation and Test Operations and NASA Vibration Lab personnel are ready to start test.

WARNING

TEST ARTICLE FAILURE COULD RESULT IN FLYING PARTICLES. ALL PERSONNEL MUST REMAIN OUTSIDE OF THE VIBRATION TEST ROOM.

C. Prepare Vibration Control System for Random Vibration (NASA personnel will perform this operation).

D. Start data recording at Test Conductor's direction and record the start time.

E. Perform vibration per the table below for a duration of 1 minute:

NOTE: The tolerance levels for the Vibration test shall be per SSP 41172.

Frequency (Hz)	Level
20	0.020 g^2 /Hz
20-80	+ 3.0 dB/oct
80-350	0.08 g^2/Hz
350-483	- 3.0 dB/oct
483	0.058 g^2/Hz
483-508	+ 17.6 dB/oct
508	0.078 g^2/Hz
508-2000	- 3.0 dB/oct
2000	0.02 g^2/Hz
Composite	9.5 grms

F. Verify data has been recorded. Plot data (NASA Activity). Data plots to be attached to data package.

9.5.6 *Radial Direction Vibration Test Teardown*

NOTE: This section contains the steps for performance of test teardown after the Radial Direction Vibration Test.

CAUTION

**USE EXTREME CARE WHEN HANDLING TEST ARTICLES.
CLEAN WHITE COTTON GLOVES MUST BE WORN
WHEN HANDLING TEST ARTICLES.**

A. Remove accelerometer data cable (ref SK683-23505).

B. Perform an external visual inspection of test article(s) and record any comments.

C. Remove the vibration test fixture(s), SK683-82154, from the Horizontal Vibration Machine (ref SK683-23505).

NOTE: The Test Teardown required after the Radial Direction Vibration Test Conduct has been completed. Test setup for Tangential Vibration Test may now begin.

9.5.7 *Tangential Direction Vibration Test Setup*

NOTE: This section contains the steps for performance of the Tangential Direction Vibration Test setup.

CAUTION

**USE EXTREME CARE WHEN HANDLING TEST ARTICLES.
CLEAN WHITE COTTON GLOVES MUST BE WORN
WHEN HANDLING TEST ARTICLES.**

A. Install the vibration test fixture(s) (with installed test articles) on the Horizontal

Vibration Test Machine in the Tangential Direction orientation per SK683-23505. Record mounting bolt torque values.

B. Connect the appropriate accelerometer instrumentation cable per SK683-23510.

C. Restrain all instrumentation wiring from vibrating freely during test such that damage to installed instrumentation will not occur.

NOTE: The Test Setup required to support Tangential Direction Vibration Test Conduct has been completed.

9.5.8 *Tangential Direction Vibration Test*

A. Clear test area of all nonessential personnel.

B. Verify that Boeing Instrumentation and Test Operations and NASA Vibration Lab personnel are ready to start test.

WARNING

TEST ARTICLE FAILURE COULD RESULT IN FLYING PARTICLES. ALL PERSONNEL MUST REMAIN OUTSIDE OF THE VIBRATION TEST ROOM.

C. Prepare Vibration Control System for Random Vibration (NASA personnel will perform this operation).

D. Start data recording at Test Conductor's direction and record the start time.

E. Perform vibration per the table below for a duration of 1 minute:

NOTE: The tolerance levels for the Vibration test shall be per SSP 41172.

Frequency (Hz)	Level
20	0.020 g^2 /Hz
20-80	+ 3.0 dB/oct
80-350	0.08 g^2/Hz
350-483	- 3.0 dB/oct
483	0.058 g^2/Hz
483-508	+ 17.6 dB/oct
508	0.078 g^2/Hz
508-2000	- 3.0 dB/oct
2000	0.02 g^2/Hz
Composite	9.5 grms

F. Verify data has been recorded. Plot data (NASA Activity). Data plots to be attached to data package.

9.5.9 *Tangential Direction Vibration Test Teardown*

NOTE: This section contains the steps for performance of test teardown after the Tangential Direction Vibration Test.

CAUTION

USE EXTREME CARE WHEN HANDLING TEST ARTICLES. CLEAN WHITE COTTON GLOVES MUST BE WORN WHEN HANDLING TEST ARTICLES.

A. Remove accelerometer data cable (ref SK683-23505).

B. Remove the Test Article(s) from the vibration test fixture (reference SK683-23505) and record the mounting bolt break away torque.

C. Perform an external visual inspection of test article(s) and record any comments. Wipe external surfaces with 200 proof denatured alcohol. Record any comments.

D. Remove the vibration test fixture(s) from the Horizontal Vibration Test Machine (reference SK683-23505).

E. Package Test Article(s) for movement from Vibration Test Area to the Functional Test Area. All other hardware and equipment is to remain at the Vibration Test Area.

NOTE: The Test Teardown required after the Tangential Direction Vibration Test Conduct has been completed.

9.6 POST VIBRATION FUNCTIONAL TEST

Following the Vibration Test, the Powered Bolt Nut will be Functionally Tested for four cycles (cycle's numbers 26 through 29).

9.6.1 *General Notes*

A. This section has been written to support performance of the Post Vibration Functional Test on the PBN Test Article. If more than one test articles (i.e. two Powered Bolt Nuts) are to be vibration tested, then they must have been functionally tested prior to this section.

B. All data recording and procedure step buyoffs will be recorded in Appendix D or other TC approved data sheets. If more than one test article is being tested, data must be recorded in each test articles' data sheet.

C. Sections 9.6.2 and 9.6.3 are not required if the test fixture has already been checked out in its current location. Section 9.6.3 (all or part) may be performed at any time at IE's or TC's direction.

9.6.2 *Setup*

NOTE: This section contains the steps for performance of the PBN Functional Test / Thermal Vac Test Instrumentation, Motor Control System, and Test Fixture setup. Perform this set up for initial Fixture configuration and for Fixture changes only. Software operation is defined in Appendix C.

A. Record facility location.

B. Position the Thermal Vac Test Fixture Assembly, SK683-23620, in the planned test area. Record Fixture Assembly Part Number (P/N) and serial number (S/N).

C. Install Test Support Equipment, (TSE), bolt and nut per SK683-23504.

D. Setup the PC Control and Instrumentation System per drawing SK683-23510.

E. Connect the cables from the PB Actuator to the power control rack per SK683-23510.

9.6.3 *Checkout*

Refer to Appendix C for software operations.

A. Input / verify the calibration values for the fixture load and torque for the given Functional Fixture / Bolt. (Calibration values available from Calibration Data Sheets).

B. Power on the DACS and load the executable S/W. Record name and revision level of S/W.

(1) Set up and initialize DACS as applicable per Appendix C.

(2) Open Bolt File Name and set Bolt information.

(3) Zero the fixture load.

(4) Apply compressive load to Fixture Load Cell, verify a negative reaction

(5) Apply the required precision shunt resistance (from Calibration Data Sheet) to the fixture load cell across - EXC and - SIG pins. Note, use the test points located on the Load Cell Cable at the back of the Test Rack, per SK683-23510.

(6) Verify the displayed value for the load is of the proper polarity and magnitude (Range = value from Calibration Data Sheet +/- 100 lbs.). Record Fixture load reading in Appendix D.

(7) Remove the precision shunt resistance from the fixture load cell.

(8) Zero the torque offset.

(9) Manually apply a torque to the torque cell.

(10) Verify the displayed value for the given Fixture / Bolt is of proper polarity and magnitude for the torque cell measurement in comparison to Torque Cell Digital Display.

(11) Remove the applied torque from the torque cell.

(12) Zero load and torque offsets.

(13) Zero the Rev Positions.

(14) Verify the operation of Manual Motor Movement per Appendix C.

(15) Verify the operation of Auto Motor Movement per Appendix C.

(16) Verify the operation of Emergency Motor Stop function.

(17) Verify that data was written to the DACS hard disk under the data file name input from above.

(18) Remove TSE Bolt and Nut from Test Fixture.

(19) Repeat steps B (1) through B (18) for each Thermal Vac Fixture / Bolt set up.

9.6.4 *Test Article Setup*

A. Acquire all equipment required for this section as specified in Appendix A. Record required equipment P/Ns and S/Ns. Verify that the DACS equipment is in calibration and record required calibration dates.

CAUTION

USE EXTREME CARE WHEN HANDLING TEST ARTICLES. CLEAN WHITE COTTON GLOVES MUST BE WORN WHEN HANDLING TEST ARTICLES.

B. Record the Part Number (P/N) and Serial Number (S/N) of the Test Article.

C. Center the encapsulated nut and washers within the cutout in the nut plate prior to installation in test fixture. Take care not to move encapsulated nut relative to nut plate during or after installation.

D. Install Test Article in the Test Fixture per SK683-23504. Verify washers are not trapped between nut plate and Test fixture by taking a .01 inch shim to confirm that the nut plate is flush with the test fixture.

E. Record the P/N and S/N of the mating test article (Powered Bolt (PB) being used for this test.

F. Set gap between active and passive flanges (Range = .275 to .325 in.). Record flange gap.

G. Verify that the DACS is on and operational.

H. Setup the Ambient Condition Monitor and verify the capability to monitor ambient temperature, relative humidity, and atmospheric pressure.

9.6.5 *Functional Performance Test*

A. Verify a PB and a PBN have been installed on the functional test fixture and instrumentation checkout completed.

B. Verify that Boeing Instrumentation and Test Operations personnel are ready to start test.

9.6.6 *DACS Startup*

NOTE: A User's Guide to the manipulation of the executable S/W is located in Appendix C.

A. Verify that the DACS is on and operational.

B. Record Bolt and Nut Serial Numbers, (SN's), Data File name in the appropriate Table.

C. Zero Absolute Revs per Appendix C.

D. Zero fixture load and torque cells.

E. Verify Bolt info: Fixture #, Bolt SN #, Start Cycle, End Cycle Load Limit=17500 Lbs., and Torque Limit=1510 In-Lbs. for cycles 26 through 29.

9.6.7 *Functional Test Run*

NOTE: This section provides the steps for running the functional test.

A. Verify the test area is clear of all nonessential personnel and all other cautions and/or warnings have been adhered to.

B. Record ambient conditions of temperature, humidity, and verify within limits.

EMERGENCY MOTOR STOP

USE F9 TO STOP ALL MOTOR MOVEMENT AT ANY TIME (MANUAL OR AUTO MOOR MOVEMENT MODES).

C. Start the functional test, cycle numbers 26-29.

D. Record the Max Loads and Max Torque values for each cycle.

E. At the completion of Cycle 29, verify all motors have stopped. If there is no additional testing required, exit the program per Appendix C.

9.6.8 *Data Verification*

NOTE: This section provides the steps for verifying the data is satisfactory following the functional test.

A. Verify that the Max Loads and Max Torque values meet the requirements as defined in Section 3.2D of this document. Record data.

B. Verify that the test data has been downloaded from the DACS to floppy disk and the disk has been labeled per Appendix C.

9.6.9 *DACS Safing and Power Down*

NOTE: This section provides the steps for safing and powering down the DACS, if no further testing is required.

A. Verify that the test data has been downloaded from the DACS to floppy disk and the disk has been labeled per Appendix C.

B. Power off the DACS: (Only if no more testing is to be done)

(1) Power off the DACS Cabinet.

(2) Power off the PC and motor control power supplies.

9.6.10 *Functional Test Teardown*

NOTE: This Section contains the steps required to remove the test article(s) from the Functional Test Setup, if no additional testing is required.

A. Verify that all power has been removed from the test setup.

CAUTION

USE EXTREME CARE WHEN HANDLING TEST ARTICLES. CLEAN WHITE COTTON GLOVES MUST BE WORN WHEN HANDLING TEST ARTICLES.

B. Remove the Test Article from the Functional Test Fixture (reference SK683-23504).

C. Perform an external visual inspection of the test article. Record any comments in Appendix D.

D. If the Test Article has completed all Acceptance Tests and has met all the requirements of this document, then the following steps shall be performed prior to shipment for final packaging in order to minimize on-orbit contamination due to dry film lubricant:

(1) Wipe the internal threads and front conical face of the Powered Bolt Nut using a lint-free cloth wipe moistened with isopropyl or ethyl alcohol. The cloth may be inserted into the Powered Bolt Nut to facilitate this process. Clean, dry air or nitrogen may be blown into the nut to help remove loose particles. Cleaning should continue until individual particles of lubricant (visible without magnification) are not transferred to the wipe. Discoloration of the wipe is acceptable.

(2) Inspect threads to ensure any foreign particles from this process do not remain in the Powered Bolt Nut.

E. Package the Test Article appropriately for shipment to next applicable operation.

NOTE: The Functional Test Fixture will remain in place. Only the PBN Test Article will be transported.

APPENDIX A

EQUIPMENT LIST

(This Page Intentionally Blank)

A, EQUIPMENT LIST

A.1 General Notes

All ‘‘QTY” amounts in the following tables which have an ‘‘*” designate a drawing which contains several parts. The drawing Parts List will contain the quantaties and part numbers of the items listed in the drawing.

TABLE A-1 FUNCTIONAL TEST (SHEET 1 OF 1)

QTY	NOMENCLATURE	PART NUMBER/ REF DWG		
1	Powered Bolt Acceptance Test Functional Test Fixture Assembly	SK683-13741-1		
*	Powered Bolt Acceptance Test Functional Test Setup	SK683-23504		
*	Powered Bolt Acceptance Test PC Configura tion and Control Systems Setup	SK683-23510		
1	Torque Wrench 0 to 150 in-lbs.			
1	Ambient Condition Monitor			

TABLE A-2 VIBRATION TEST (SHEET 1 OF 1)

QTY	NOMENCLATURE	PART NUMBER/ REF DWG		
A/R	Powered Bolt Acceptance Test Vibration Test Fixture Assembly	SK683-82154-1		
1	Powered Bolt Acceptance Test Functional Test Fixture Assembly	SK683-13741-1		
1	Powered Bolt Acceptance Test Vibration Test Setup	SK683-23505 SK683-23505-1 SK683-23505-2		
*	Powered Bolt Acceptance Test PC Configura tion and Control System Setup	SK683-23510		
1	Ambient Condition Monitor			
3	Accelerometers (MSFC provided)			
1	Torque Wrench 0 to 150 in-lbs.			
1	Torque Wrench 0 to 150 foot-lbs.			

TABLE A-3 VACUUM TEST (SHEET 1 OF 1)

QTY	NOMENCLATURE	PART NUMBER/ REF DWG		
1	Powered Bolt Acceptance Test Vacuum Test Fixture Assembly	SK683-23620-1		
*	Powered Bolt Acceptance Test Vacuum Test Setup	SK683-23504		
1	Torque Wrench 0 to 150 in-lbs.			
*	Powered Bolt Acceptance Test PC Configura tion and Control Systems Setup	SK683-23510		
1	Ambient Condition Monitor			

APPENDIX B

SAFETY

(This Page Intentionally Blank)

B, SAFETY

The following procedures are to be used in the event of an emergency situation, (i.e. smoke or fire) or in the case of an accident involving personal injury.

THESE PROCEDURES ARE WRITTEN FOR THE TEST AREA IN FIGURE B-1. IF ANOTHER TEST AREA IS USED, THE TEST CONDUCTOR SHALL BRIEF THE TEST TEAM ON THE DIFFERENCES BETWEEN THIS PROCEDURE AND THE SELECTED TEST AREA.

B.1 EMERGENCY/ACCIDENT PROCEDURES

Emergency procedures provide preplanned and approved guidelines for handling potential hardware/software malfunctions and hazardous situations. If a hazardous situation occurs, the following definitions state the actions necessary to maintain control of the situation and personnel safety. Actions required for the situations not covered by these procedures shall be provided by the Test Conductor real-time, based on his/her best judgment.

B.1.1 Definitions

Abort Test: Take immediate and rapid actions for restoration of safe conditions, removal or rescue of test personnel, personnel notification of the hazardous situation and shutdown of all systems. This action is taken in catastrophic critical hazard conditions such as fire, smoke, serious personnel injuries or life in danger.

Terminate Test: Discontinue test per the standard shutdown procedures provided. This action is required when the situation prevents further compliance with the test objectives.

Hold and Evaluate: Maintain current test conditions or proceed to an OFF mode to allow time to review system status and impacts of the situation. This action is required in the case of a non-hazardous situation such as an isolated minor personal injury or a hardware/software malfunction.

B.1.2 Emergency Exits and Equipment

Figure B-1 shows the emergency exits for personnel in the test area; and shows the location of fire pull stations and fire extinguishers.

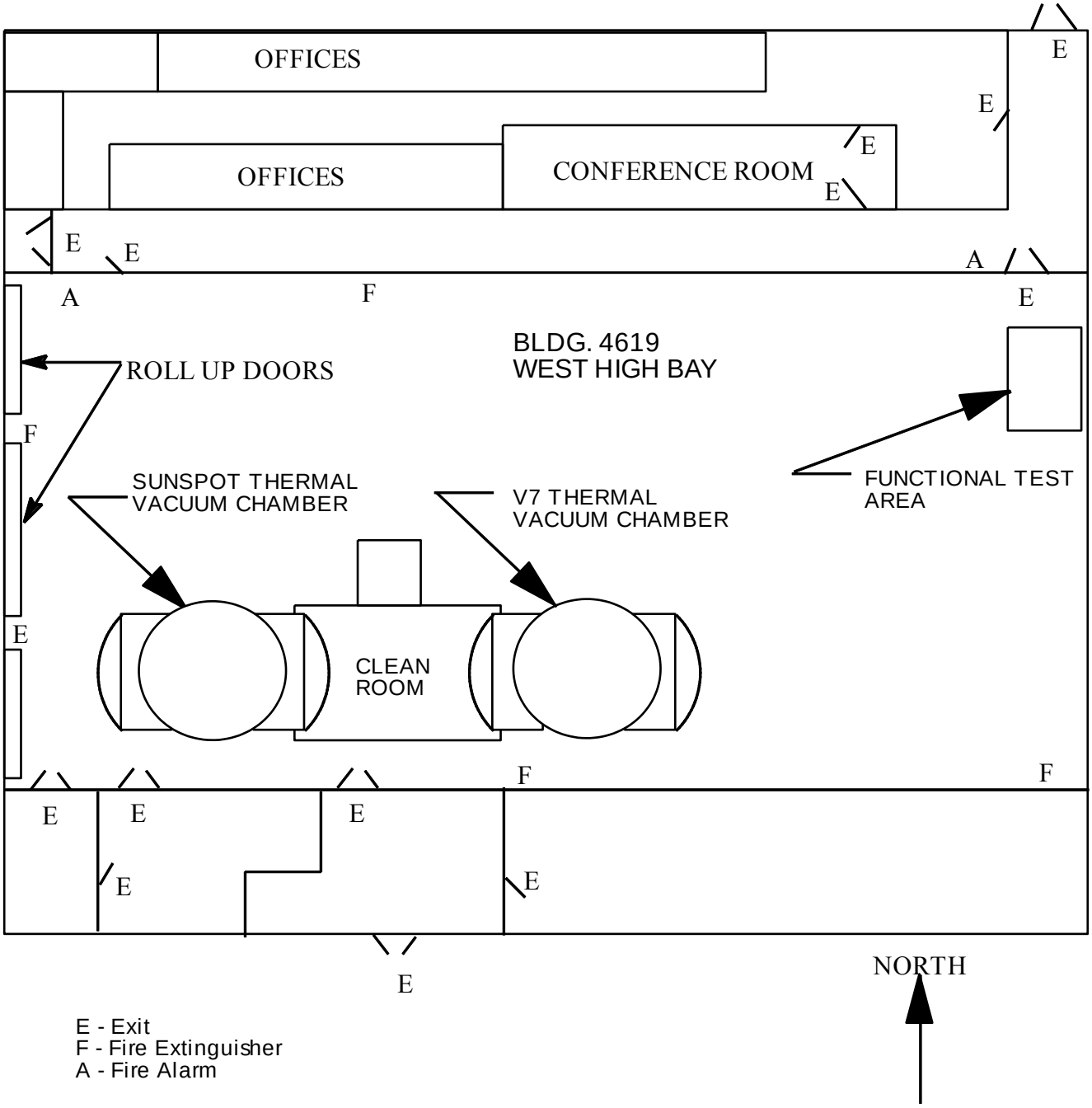

FIGURE B-1 FACILITY LAYOUT

evacuation plan
Building 18-24 Floor 1

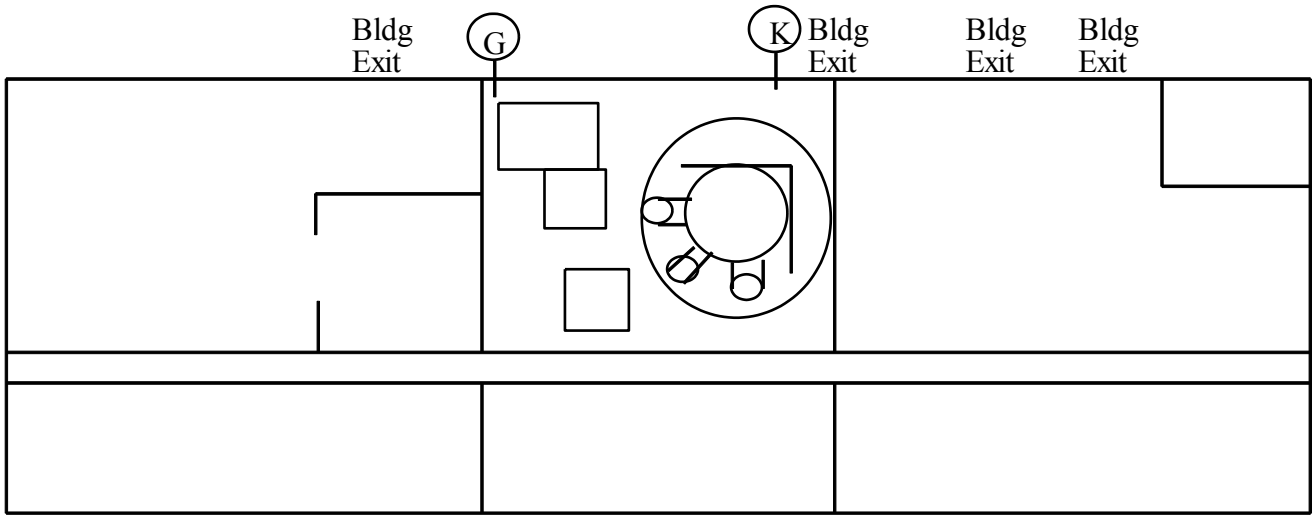

Floor Plan View - 1st Floor
Bldg 18-24

Note: Refer to Seattle Lab Operations Drawing Posted for Clarity

FIGURE B-2 FACILITY LAYOUT (SEATTLE)

B.1.3 Emergency/Accident Reporting

Figures B-3 and B-4 show the Flash Reporting Sequence and MSFC Emergency numbers to be notified in the case of an emergency or accident. The Test Conductor has the prime responsibility for initiating the notification process.

General Emergency Instructions:

A. Sound the alarm and evacuate the area.

B. If safe, render/deenergize energy systems.

C. Initiate Flash reporting sequence.

D. Establish emergency response team to support follow on action.

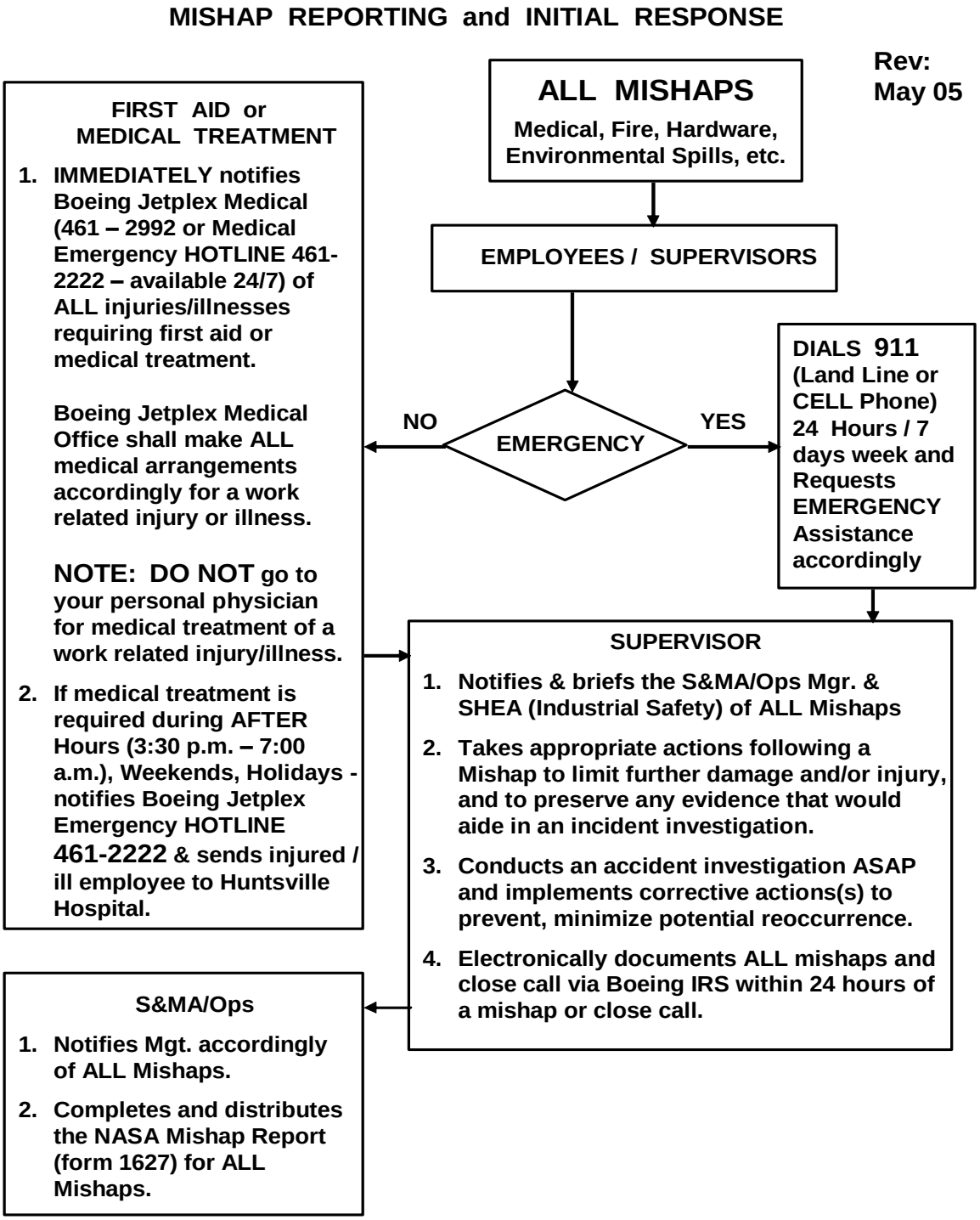

FIGURE B-3 FLASH REPORTING SEQUENCE

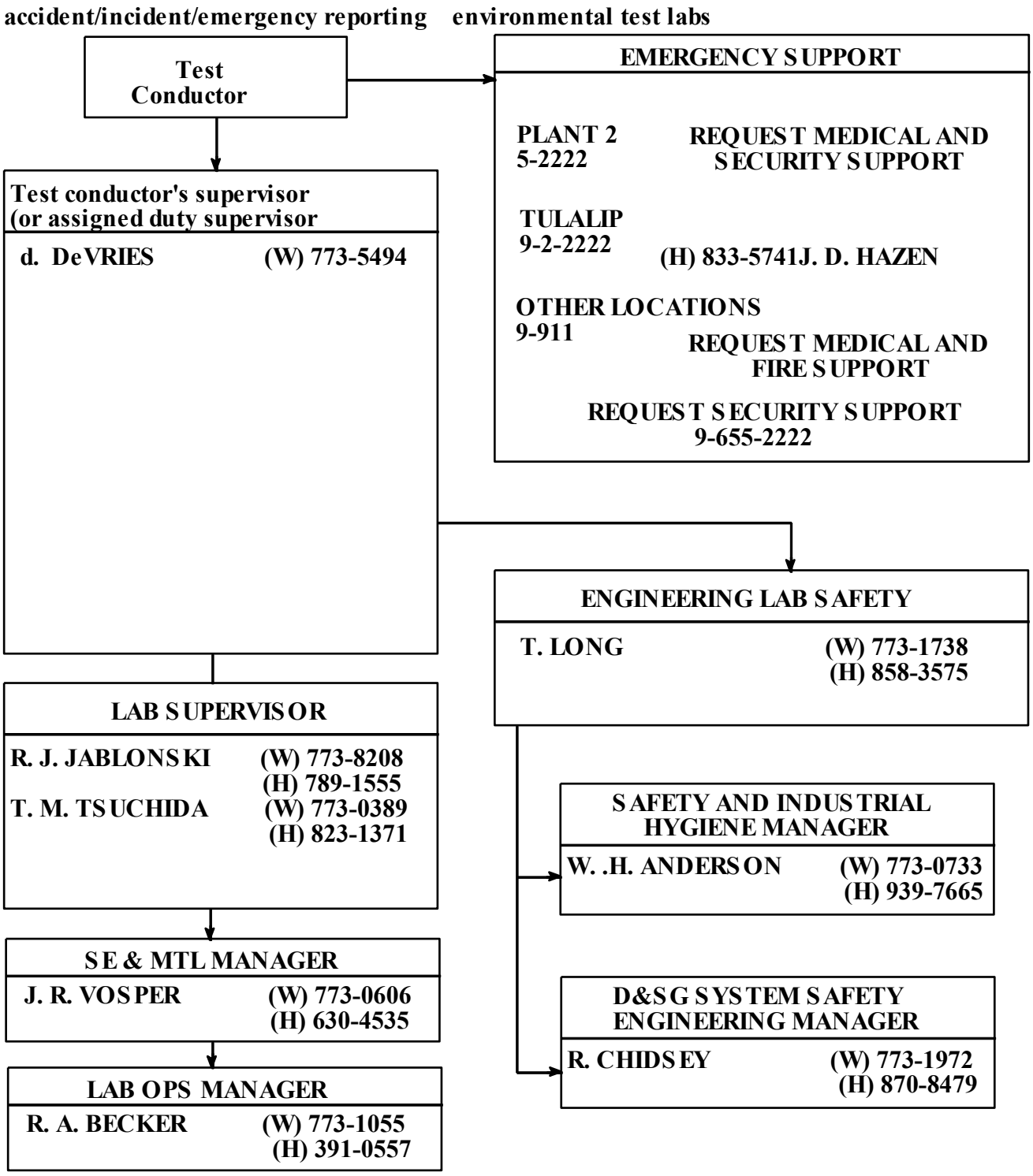

FIGURE B-4 FLASH REPORTING SEQUENCE (SEATTLE)

MFSC EMERGENCY NUMBERS

AMBULANCE	**911**
FIRE	**911**
SAFETY OFFICE	**544-0046**
SECURITY	**544-4357**
MEDICAL OFFICE	**544-2390**
UTILITIES	**544-3919**

FIGURE B-5 MFSC EMERGENCY NUMBERS

B.1.4 Systems Emergency Procedures

The following procedures are to be carried out by the Test Conductor and test personnel in accordance with the situation as defined below:

CONDITION	RESPONSIBILITY	ACTION
Fire/Visible Smoke in Test Area	Test Conductor/Technician	ABORT TEST

(1) Sound the alarm: Activate alarm at pull box and/or phone in emergency.

(2) If safe, attempt to deenergize system, i.e. pneumatic, electric, etc.

(3) Initiate notification process per Figure B-3. This may be conducted from the phone away from the situation.

CONDITION	RESPONSIBILITY	ACTION
Electrical burn/smoke odor	Test Conductor/Technician	TERMINATE TEST

(1) Shutdown affected systems.

(2) Locate nearest fire extinguisher.

(3) Investigate/Isolate the source of odor.

(4) If required, perform steps associated with a Fire/Smoke situation.

CONDITION	RESPONSIBILITY	ACTION
Loss of Facility Power	Test Conductor/Technician	HOLD & EVALUATE

(1) Evaluate the situation and impact to test. Investigate the cause and potential frequency of occurrence. Take appropriate steps to restore the failed systems to their nominal/safe operating conditions.

B.1.5 Personnel Emergency/Accident Procedures

CONDITION	RESPONSIBILITY	ACTION
Serious Personal Injury	Test Conductor/Technician	TERMINATE TEST

(1) Render the area safe, then render first aid as required.

(2) Initiate notification process per Figure B-3.

(3) Do not leave injured personnel alone until emergency personnel arrive.

CONDITION	RESPONSIBILITY	ACTION
Minor Personal Injury	Test Conductor	HOLD & EVALUATE

(1) Render the area safe, then render first aid as required.

(2) Initiate notification process per Figure B-3.

(3) Take injured individual to MSFC medical for treatment.

(This Page Intentionally Blank)

APPENDIX C

S/W USER'S GUIDE

(This Page Intentionally Blank)

C, S/W USER'S GUIDE

C.1 OVERVIEW

This Appendix provides the user of the DACS S/W instructions on how to manipulate the data screens. This section of the documents contains two setup procedures, if using test fixture SK683-13741, refer to sections C.2 through C.9 and if using test fixture SK683-23620 refer to sections C.10 through C.

C.2 STARTUP AND DIRECTORY

A. Turn on power to DACS, Torque Cell, PC and Monitor.

B. d: (sets PC to drive d)

C. chdir (cd) \pbaccept (changes directory to pbaccept)

D. pbaccept (selects the PB Acceptance Executable S/W)

E. The user input / data values (Figure C-1) screen is displayed upon successful completion of the executable S/W load.

C.3 USER INPUT

A. The F1 key allows the operator to go into the User Input mode and modify control parameters on the left half of the screen (see Figure C-1).

B. When in User Input mode, use a carriage return to move to next field and to exit to scanning mode.

C. Entered values become effective as soon as the User Input mode is exited.

(1) To exit the User Input mode, continue to press carriage return (CR) until cursor passes through last input field.

C.4 EMERGENCY MOTOR STOP

A. If an emergency occurs and the operator needs to stop the motor movement, depress the F7 key. This stops motor movement in both the Auto and Manual motor movement modes.

C.5 MANUAL MOTOR MOVEMENT

A. Press F1 (user interrupt), 5 carriage returns (CR), and then type the word IN or OUT in the Direction field.

B. Press additional carriage returns until the Scenario field in view. Then enter the work MANUAL.

C. Press additional carriage returns until user input mode is exited.

Powered Bolt Accept Control Software

Bolt SN:		Date:	XXXXXXX
Nut SN:		Time:	XXXXXXX
Test:		Millisec:	XXXXXXX
RPM:		Elapsed Sec:	XXXXXXX
Torque Limit:		Cycle:	XXXXXXX
Load Limit:		Absolute Revs:	XXXXXXX
Direction:		Bolt Preload:	XXXXXXX
Relative Revs:		Input Torque:	XXXXXXX
Start Cycle:		Max Torque In:	XXXXXXX
Stop Cycle:		Max Torque Out:	XXXXXXX
Recording:		Max PBLC Load:	XXXXXXX
Data File:		Max Fix Load:	XXXXXXX
Scenario:		Fix Load:	XXXXXXX
Fixt Cal (Lb/V):			
Torq Cal (In/V):			

F1 Modi F2 Exec F3 Z Rev F4 F5 Z Tor F6 Refr F7 Stop F8 ZFix

FIGURE C-1 MOTOR CONTROL SCREEN

NOTE: Fields with an X cannot be edited.

D. Press F2 to execute all of the user input parameters and to start movement.

C.6 AUTO MOTOR MOVEMENT

A. Press F1 (user input), carriage returns, and then type the work AUTO in the scenario field.

B. Press additional carriage returns until user input mode is exited.

C. Press F2 to start auto sequencing and movement.

C.7 ZEROING

A. To zero the position for the motor, depress the F3 key.

B. To zero the calibration offsets for load, press the F4 key.

C. To zero the calibration offsets for torque, depress the F5 key.

C.8 DATA RECORDING

A. To start the data recording process, enter user input mode and type ON in the Recording field.

B. Start the data recording for the Data File by pressing F1__, carriage returns, and the word ON in the Data File entry (see Figure 4-1) and record the start time in Appendix D.

NOTE: New data is appended to the end of existing data files (after a new header record).

C.9 CALIBRATION VALUES

To input the calibration values, hand enter the data in the Fixture Load Cal and Torque Cal fields. (NOTE: This is required prior to PB Functional Test)

C.10 POWER ON

A. Turn on PC System

B. System will boot up into Windows 95.

C. Verify power to SK683-23510-10 control system

D. Verify all instruments in system have power (SCXI DAS, HP DAS, Torque Signal Conditioners, S-Drives, DC Power Supply, and AT6400 Extender)

C.11 INPUT/VERIFICATION of CALIBRATION VALUES

A. Open **Pbolt8** Directory (access from “My Computer”)

B. Open file **"Pbolt8.ini"**

(1) Select the file

(2) Select **"File"** on menu bar

(3) Select **"Open" ("File | Open")**

C. **Pbolt8.ini** should now be open in application "Notepad"

NOTE: This file contains set-up information for DAS systems, Motor Control Systems and Calibration Data for instruments in each fixture. Caution should be exercised.

D. Verify Calibration for applicable bolt system.

NOTE: Numbering system in the Pbolt8.ini is from Bolt0 to Bolt7, indicating fixtures 1 through 8 respectively. Each section contains a line for Fixture Load Cell ("FixtLoad"), Powered Bolt Load Cell ("PBLC"), and Torque Cell ("Torque"). Each line has parameters, SLOPE (EU/V), OFFSET (EU), and ZERO (EU)

(1) Verify/Modify SLOPE of Fixture Load to match value on calibration worksheet. (lbs/V)

(2) Verify OFFSET of Fixture Load is 0.0000

(3) Verify ZERO of Fixture Load is 0.0000

(4) Verify SLOPE of PBLC is 2000000 lbs/V.

(5) Verify OFFSET of PBLC is -1000.0000

(6) Verify ZERO of PBLC is 0.0000

(7) Verify/Modify SLOPE of Torque to match value on calibration worksheet. (In-lbs/V)

(8) Verify OFFSET of Torque is 0.0000

(9) Verify ZERO of Torque is 0.0000

E. Save Pbolt8.ini in Notepad window by selecting **"File | Save"**

F. Exit Notepad using **"File | Exit"**

C.12 SET-UP AND INITIALIZATION

A. Start S/W by "double-clicking" with the Mouse its icon. i.e. **"Pbolt8"**

B. A window labeled **"Pbolt8"** should open and be active

C. Initialize the Data Acquisition Systems

(1) Select **"NI-SCXI-1"** from menu bar for DAS for fixtures 1-4

(2) Select **"Setup Info..."** from menu **("NI-SCXI-1 | Setup Info")**

(3) Verify contents are correct

(4) Select **"OK"**

(5) Select **"NI-SCXI-1 | Scan"**

(6) Repeat steps 1-5 for **"NI-SCXI-2"** if any of fixtures 5-8 are required.

D. Initialize Motor Control Systems

(1) Select **"AT6400-1"** from menu bar for fixtures 1-4

(2) Select **"Verify Op Sys...."** form menu

(3) Verify card address. Address=768 for card 1, 776 for card 2

(4) Select **"OK"**

(5) System should return to active status or respond with a window stating "Operating System Loaded" if this is the first attempt to load. Otherwise an error message will be indicated.

(6) Select **"OK"** if **"Loaded"** message appears

(7) Select **"AT6400-1 | Setup....."**

(8) Verify information and select **"OK"**

(9) Repeat steps 1-8 for **"AT6400-2"** if any fixtures 5-8 are required

C.13 BOLT WINDOW INITIALIZATION AND SET-UP

A. Open Bolt Window

(1) Select **"File | Open Bolt...."** from menu

(2) Select a file from the list or type in a new name

(3) Select **"Open"**

a. If a new file was entered a dialog box requesting confirmation will appear.
b. Confirm file name and select **"OK"**
c. New window will appear titled: **"Bolt #0 -** ***filename.prn***"

NOTE: This filename is also the data file for the bolt/nut installed in the fixture

B. Set Bolt Information for the current window

(1) 1. With current bolt window active, select **"File | Set Bolt Info…"** from menu

(2) 2. Modify information for: **Fixture # (1-8)**

(All entries must be numeric) **Bolt Serial #:**

Nut Serial #:

Start Cycle:

End Cycle:

Load Limit (lbs):

Torque Limit (in-lbs):

NOTE: For -3 Bolts, enter <u>3xxx</u> into Serial Number entry where xxx is the serial number of the Bolt.

(3) Select **"OK"**

(4) Window Title should change to **"Bolt #X - *filename.prn*"** where X is the fixture number.

(5) Window should now update readings for transducers and other information

C. Repeat Section C.13 for each test fixture in use

C.14 BOLT WINDOW OPERATION

A. Zero Transducers

(1) Select **"Zero"** from menu bar

(2) Verify that no torque exists on the fixture torque cell

(3) Select **"Current Torque"** from menu to zero offset Torque Cell reading

(4) Verify that no load exists on the fixture load cell

(5) Select **"Current Load"** from menu to zero offset Fixture Load Cell

(6) Apply shunt resistor to fixture load and record in Appendix D. Remove shunt.

(7) Readings in current window should now read approximately zero

(8) Repeat Steps 1 through 7 for all open bolts.

NOTE: Zero Offset values will be saved in the Pbolt8.ini file upon program exit

B. Manual Motor Operation

(1) Select ”AutoSeq” menu and verify ”Stop Current Bolt” is checked.

(2) Select **“AT6400-1”** for fixtures 1-4 or **“AT6400-2”** for fixtures 5-8

(3) Select **“Manual Motion”** from menu bar

a. Select desired Axis (Note: on **“AT6400-2”** Axis 1-4 correspond to fixture 5-8)

b. Enter desired **speed** (RPM) and **distance** (revs) in positive numbers

c. If required, zero position by selecting **“Zero”**

d. Selecting **“Stop”** will cease motion of axis selected

e. Command motion by selecting direction, “CW” or “CCW”

NOTE: CW command disengages bolt, CCW command engages bolt

f. Select “Close” when ready to exit

NOTE: The window may be closed during motion and “F9” will stop motion as long as the bolt window has been defined.

g. To verify Manual Operation command motor to turn 1 Rev at 5 RPM in clockwise direction, verifying speed, distance, and direction for each axis used.

h. Repeat Step 3 for each open bolt.

C. Auto Sequence Operation

(1) Verify Bolt Information for current bolt per C.13.B

(2) Zero revs for each open bolt.

NOTE: Current bolt is window highlighted

(3) Select **"AutoSeq | Start Current Bolt"** from menu to engage Auto Sequence

NOTE: Auto Sequence is defined as the Current Bolt starting at some position, driving in at 5 RPM until Fixture Load indicates more than 100 lbs, slowing down to 0.5RPM, continuing to drive in until the Fixture Load reaches the limit specified in "Set Bolt Info". After a 5 second interval, the bolt will reverse direction and begin disengaging at 0.5RPM until the Fixture Load drops to less than 100 lbs. The bolt will then continue disengaging until the distance traveled is 1 rev past 0.

If required by the "Set Bolt Info", the revs will be zeroed automatically and the system will run another cycle. If the Torque reaches limit specified in "Set Bolt Info" the system will stop and hold its current position.

Data is recorded any time the bolt is moving, at 1 Hz during 5 rpm and 5 Hz during .5 rpm. Screen is updated at a rate specified in the NI_SCXI setup menu, default is 5 Hz (once every 200milliseconds).

(4) At any point in the bolt's auto sequencing, the menu selection **"AutoSeq | Stop Current Bolt"** can be selected to halt motion of the highlighted bolt. This can also be accomplished in the active window by pressing the **"F8"** key.

(5) In cases of emergency or when all bolts are to be stopped, select **"AutoSeq | Stop All Bolts"**. This will stop all bolts regardless of which bolt window is highlighted. Also activated by pressing the **"F9"** key.

D. Thermal Operation

(1) Select **"Thermal | Setup"** from the menu and choose the desired MML (measurement list) file and then the matching SCN (scanner command) file.

(2) Select **"Thermal | Thermal Scanning On"** to start collecting data from the HP.

(3) Select **"Thermal | Data File Open"** and select an existing data file or enter the name of a new file (reference "TVXXXXTC" where XXXX is date).

(4) Select **"Thermal | Rate"** to enter a rate of recording (number of seconds between scans)

(5) Select **"Thermal | View Data"** to display data in a window

(6) Select **"Thermal | Recording"** to start recording data.

C.15 FILE MINIPULATION AND PROGRAM TERMINATION

A. Data is stored in file names setup during **"File | Open Bolt"** for each bolt.

B. Bolt data can be saved as another name upon completion using **"File | Save as"**

C. The **Pbolt8.ini** file is saved upon program termination updating any setup changes for NI-SCXI or AT6400's and any Zero offsets created for each bolt.

D. To Terminate the program select **"File | Exit"**

C.16 DATA LABELING AND HANDLING

A. The test data shall be stored on 2 MB, 3.5 inch diskettes formatted with MS-DOS.

B. The test data files shall be recorded on the storage media in binary. An executable conversion program will be available to convert the data to ASCII format.

C. The computer storage media shall be labeled with a unique serial number for the individual unit. The serial number shall be based on the program ID, test unique number, and a sequence number. The test unique number will be the same number allocated for the transducer ID numbers. The Common Berthing Mechanisms tests have the numbers from 1001 to 2000. The media should be labeled with the contract number, Test Procedure Number, Test Name, number of copies, and date for traceability. Serial number will be recorded in the test log. An example is listed below:

SSP-1001-1
NAS15-10000
''Test Procedure D683-85130-9"
''Work Order Number"
''PB Acceptance Test"
S/N xxxxxxx (where xxxxxx is the Serial Number(s) tested)
''Date"

D. The test data, along with the Integrated Record System Order (IRSO) data package, will be stored by Quality Assurance (QA) in Records Retention at MSFC 4708 in room 244. The facility is not capable of storing the computer media for the duration of the program. The computer media will be transferred at an appropriate time to a different facility that has not been determined.

E. The test data computer storage media can be retrieved from the storage facility for use in data analysis. The procedure to request the media from the storage facility is to contact QA in MSFC Building 4708 room 244.

F. The computer media storage and access is controlled by the QA organization. Contact this organization in the future to gain access to the data. The current contact point is Wayne Metcalf.

C.17 HANDWRITE CHANGES

This portion of Appendix C provides the user with general instructions and responsibilities for use of the Handwrite Change Log.

This log will include a complete history of handwrite changes made to this procedure.

C.17.1 Instructions

A. Only the personnel listed in section 1.5.1 are authorized to make handwritten changes to this Test Procedure.

B. Conditions that allow handwrite changes are:

(1) A non-technical error in the procedure such as;
   a. typographical error
   b. omission of a required operating step

(2) A technical change as required to improve of incorporate workarounds not affecting test requirements or test results.

(3) Technical changes required to comply with written and approved changes to test requirements.

C. Handwrite changes will be made in the official "Test Copy" of the procedure being used by the Test Conductor.

(1) They will be made in black ink by lining out the information to be changed and writing in the new information directly above it or by identifying the new information as an insert which may be located elsewhere on the page or on a separate page.

(2) Both the new information and the lined out information must be legible.

(3) They will be entered by the Test Conductor and initialed.

(4) All handwrite changes will be verified by QA.

D. Any deviation from the procedural steps given in the released test procedure that are necessary to complete the test will be indicated by a handwrite change in accordance with the above instructions.

E. A non-technical change may be entered without interruption of test operations providing safety is not affected. If the change is technical or Safety is affected, test operations will be held until the required concurrence is obtained.

F. Since test may be in progress on a multishift basis, maintaining a test hold while obtaining the necessary concurrences may not be consistent with schedule restraints. In such cases, the Test Conductor may chose to proceed with a handwrite change and at least verbal coordination. If this happens, the necessary approvals will be obtained at the resumption of normal working hours. It is recognized that the risk of having to re-run is inherent in choosing to proceed without obtaining the necessary concurrence.

C.17.2 Responsibilities

A. Test Conductor will:

(1) Control all aspects of test operations

(2) Enter handwrite changes

(3) Control handwrite changes as required herein

(4) Decide if a change affects requirements or Safety

(5) Maintain test copy of procedures (As Run)

B. Quality Assurance

(1) Authenticate handwrite changes as required herein with due regard to placement, legibility, and adequacy of substantiating information justifying the change.

(2) Monitor and verify accomplishment of test operations in accordance with the test procedure.

(3) Maintain QA records in accordance with this appendix and the D2-107000-1, “Aerospace Operations Standard Integrated Record System.”

C. System Safety

Provide safety assessments as required herein and initial affected changes.

D. Systems Engineering

Assess and initial handwrite changes affecting test requirements.

C.17.3 Handwrite Change Log Forms

The Handwrite Change Log forms located on the following pages are to be used for all Handwrites to this procedure. Additional pages may be added, as required, if additional room is needed.

BOEING INTEGRATED RECORD SYSTEM ORDER HANDWRITE LOG SHEET	JOB NO.	AREA/MODEL POWERED BOLT NUT	PRIME LEVEL CODE ACCEPTANCE	DOCUMENT NO. D683-85130-9

HW NO.	PAGE/SHT. STEP NO.	PARA., FIGURE, TABLE VIEW, ETC.	REASON FOR CHANGE	APPROVALS			
				ORIGINATOR	SAFETY	DCMC	QA
PAGE NO.	DOCUMENT NO. D683-85130-9		JOB NO.				

BOEING INTEGRATED RECORD SYSTEM ORDER HANDWRITE LOG SHEET	JOB NO.	AREA/MODEL POWERED BOLT	PRIME LEVEL CODE ACCEPTANCE	DOCUMENT NO. D683-85130-7

HW NO.	PAGE/SHT. STEP NO.	PARA., FIGURE, TABLE VIEW, ETC.	REASON FOR CHANGE	APPROVALS ORIGINATOR	SAFETY	DCMC	QA

PAGE NO.	DOCUMENT NO. D683-85130-7	JOB NO.	

BOEING INTEGRATED RECORD SYSTEM ORDER HANDWRITE LOG SHEET	JOB NO.	AREA/MODEL POWERED BOLT	PRIME LEVEL CODE ACCEPTANCE	DOCUMENT NO. D683-85130-7

HW NO.	PAGE/SHT. STEP NO.	PARA., FIGURE, TABLE VIEW, ETC.	REASON FOR CHANGE	APPROVALS			
				ORIGINATOR	SAFETY	DCMC	QA
PAGE NO.	DOCUMENT NO. D683-85130-7		JOB NO.				

APPENDIX D

POWERED BOLT NUT
DATA SHEETS

(THE DATA SHEETS IN APPENDIX D ARE FOR RECORDING ALL REQUIRED DATA FOR THIS TEST. AN ALTERNATE FORMAT IS ACCEPTABLE AS LONG AS ALL THE REQUIRED DATA IS RECORDED)

(This Page Intentionally Blank)

D, DATA SHEETS

D.1 OVERVIEW

This Appendix provides the user of this document the data sheets need to manually record data and record the signatures for buyoff of the procedure.

D.2 ACCEPTANCE CRITERIA

A. The functional test requirement listed in the test steps will be considered successful when a minimum preload of 19,300 lbs with a maximum input torque of 1600 in. lbs. is achieved between the PB and Nut. This preload measurement will be taken from the Test Fixture Load Cell.

B. The Vacuum Torque Acceptance test requirement listed in the test steps will be considered successful if the Input Torque for the specified cycles (cycles 17-21) is less than the input torque for the first vacuum cycle plus 50 in-lbs. (Required input torque still has to meet the requirement of Step 3.2A.)

C. The Vibration Test will be considered successful if the Test Article passes the post-vibration functional test as listed in the test steps.

D.3 INITIAL REQUIREMENTS

A. Record Test Article Name, PN and SN:
Test Article Name: _____
PN: _____ SN:_____
MACCS ID: _____

D.4 DATA RECORDING AND SIGNATURE BUY OFF

Section 4.2 Facility Location: _____

Section 4.3.1 Instrumentation and Test Fixture Setup
Fixture Assy P/N: _____
Setup complete

Shop_____ IE _____ QA _____ Date: _____

Section 4.3.2 Instrumentation and Test Fixture Checkout

S/W Name: _____ Rev: _____

Fixture Load Reading _____

Checkout complete.

IE_____ Date: _____

Section 4.4 Test Article Setup

Torque Wrench ID. (0-150 in-lbs.) _____ Cal Due: _____
DACS ID._____ Cal Due Date: _____
Fixture Load Cell ID _____Cal Due Date: _____
Torque Cell ID _____ Cal Due Date: _____
Test Article P/N: _____ S/N _____
Mating Component P/N: _____
Mating Component S/N _____
Visual Inspection: _____
_____
_____
Thread Gage Results: _____
_____
Flange Gap Measurement: _____

Setup Complete.

Shop _____ TC _____ QA _____ Date: _____

Section 4.5.1 Functional Performance Test Setup

Test Article installed and checkout complete per 4.5.1 step A.
Test Team ready.
TC _____ Date: _____

Section 4.5.2 DACS Setup

Bolt SN _____ Fix Load Cal _____
Nut SN _____ Torque Cal _____
Data File _____

DACS Setup Complete.

TC_____ Date: _____

Section 4.5.3 Functional Test Run

Verify Test area is clear. TC _____

Record the following ambient conditions:

Temperature _____^{o}F, Relative Humidity _____%, Pressure _____

Functional Test Start Time _____

Functional Test Complete (Cycle 0).

TC_____ Date: _____

Section 4.6 Data Verification

Verify data meets the criteria of Section 3.2A.

Record Max Loads and Max Torque values for each cycle:

Cycle 0 Fixture Load = _____

Torque In=_____, Torque Out=_____

Max Load and Torque In requirements met per Section 3.2A: (Fixture Load $>$19,300 lbs., Torque<1600 in-lbs.)

Data Verification compete.

TC_____ IE _____ QA: _____ Date: _____

Section 4.7 DACS Safing and Power Down

Verify complete.

IE_____ Date: _____

Section 4.8 Functional Test Teardown

Visual Inspection comments:

_____

_____

Teardown Complete.

TC_____ Shop _____ QA _____ Date: _____

Section 4.15.1 Instrumentation and Test Fixture Setup - Cycle 1

Fixture Assy P/N: _____ S/N _____
Torque Wrench ID. (0-150 in-lbs.) _____ Cal Due: _____
DACS ID._____ Cal Due Date: _____
Fixture Load Cell ID _____Cal Due Date: _____
Torque Cell ID _____ Cal Due Date: _____
Test Article P/N: _____ S/N _____
Mating Component P/N: _____ S/N _____

Flange Gap Measurement: _____

Setup complete

Shop_____ IE _____ QA _____ Date: _____

Section 4.16.1 Functional Performance Test Setup

Test Article installed and checkout complete.
Test Team ready.
TC _____ Date: _____

Section 4.16.2 DACS Setup

Bolt SN _____ Fix Load Cal _____
Nut SN _____ Torque Cal _____
Data File _____

DACS Setup Complete.

TC_____ Date: _____

Section 4.16.3 Functional Test Run

Verify Test area is clear. TC _____

Record the following ambient conditions:

Temperature _____^{o}F, Relative Humidity _____%, Pressure _____

Functional Test Start Time _____

Functional Test Complete (Cycle 1).

TC_____ Date: _____

Section 4.17 Data Verification

Verify data meets the criteria of Section 3.2A.

Record Max Loads and Max Torque values for each cycle:

Cycle 1 Fixture Load = _____

Torque In=_____, Torque Out=_____

Max Load and Torque In requirements met per Section 3.2A: (Fixture Load $>$19,300 lbs., Torque<1600 in-lbs.)

Data Verification compete.

TC_____ IE _____ QA: _____ Date: _____

Section 4.18 DACS Safing and Power Down

Verify complete.

IE_____ Date: _____

Section 4.19 Functional Test Teardown

Visual Inspection comments:

_____

_____

Teardown Complete.

TC_____ Shop _____ QA _____ Date: _____

Section 5.2 Vacuum Facility Location:_____

Section 5.3.1 Instrumentation and Test Fixture Setup

Fixture installed in vacuum chamber. TC _____

Fixture and Control Systems setup.

IE _____ Date: _____

Section 5.3.2 Instrumentation and Test Fixture Checkout

Fixture Load Reading _____

Checkout complete.

IE_____ Date: _____

Section 5.4 Test Article Setup

Torque Wrench ID (0 to 150 in-lbs): _____ Cal Due: _____
DACS ID._____ Cal Due Date: _____
Fixture Load Cell ID _____Cal Due Date: _____
Torque Cell ID _____ Cal Due Date: _____
Fixture Assy P/N _____ S/N _____
Test Article S/N _____
Mating Component P/N: _____
Mating Component S/N _____
Flange Gap Measurement: _____ TC_____ IE
_____ QA: _____ Date: _____

Setup Complete.

Shop_____ TC _____ QA _____ Date _____

Section 5.5.1 Test Conduct

DACS Ready for Chamber Depressurization

TC_____ Date: _____

Record depressurization start time: _____
Record time chamber reaches $1x10^{-4}$ Torr: _____

Section 5.5.1 (Continued)

DACS Setup

Bolt SN _____ Fix Load Cal _____
Nut SN _____ Torque Cal _____
Data File _____

DACS Ready for Vacuum Test conduct

TC_____ IE _____ Date: _____

Vacuum Functional cycles:

Cycle 2 Fix Load=_____, Torque In=_____, Torque Out=_____
Cycle 3 Fix Load=_____, Torque In=_____, Torque Out=_____
Cycle 4 Fix Load=_____, Torque In=_____, Torque Out=_____
Cycle 5 Fix Load=_____, Torque In=_____, Torque Out=_____
Cycle 6 Fix Load=_____, Torque In=_____, Torque Out=_____
Cycle 7 Fix Load=_____, Torque In=_____, Torque Out=_____
Cycle 8 Fix Load=_____, Torque In=_____, Torque Out=_____
Cycle 9 Fix Load=_____, Torque In=_____, Torque Out=_____
Cycle 10 Fix Load=_____, Torque In=_____, Torque Out=_____
Cycle 11 Fix Load=_____, Torque In=_____, Torque Out=_____
Cycle 12 Fix Load=_____, Torque In=_____, Torque Out=_____
Cycle 13 Fix Load=_____, Torque In=_____, Torque Out=_____
Cycle 14 Fix Load=_____, Torque In=_____, Torque Out=_____
Cycle 15 Fix Load=_____, Torque In=_____, Torque Out=_____
Cycle 16 Fix Load=_____, Torque In=_____, Torque Out=_____
Cycle 17 Fix Load=_____, Torque In=_____, Torque Out=_____
Cycle 18 Fix Load=_____, Torque In=_____, Torque Out=_____
Cycle 19 Fix Load=_____, Torque In=_____, Torque Out=_____
Cycle 20 Fix Load=_____, Torque In=_____, Torque Out=_____
Cycle 21 Fix Load=_____, Torque In=_____, Torque Out=_____

Section 5.5.1 (Continued)

Data satisfactory to continue per Section 3.2A: (Fixture Load > 19,300 lbs., Torque < 1600 in-lbs.)

TC_____ IE _____ QA _____ Date: _____

Section 5.5.1 (Continued)

Data satisfactory to continue per Section 3.2B: (Torque on cycles 17 through 21 < torque on cycle 4 +50 in-lbs.)

TC_____ IE _____ QA _____ Date: _____

Thermal Conditioning Cooling start time: _____
Time Passive Flange reaches -40F: _____
Soak period start time: _____ Soak end Time: _____
Passive Flange Temperatures: (Tx003) _____, (Tx004) _____

DACS Setup

Bolt SN _____ Fix Load Cal _____
Nut SN _____ Torque Cal _____
Data File _____

Cycle 22 Fixture Load = _____
Torque In=_____, Torque Out=_____

Max Load and Torque In requirements met per Section 3.2A: (Fixture Load > 19,300 lbs., Torque < 1600 in-lbs.)

TC_____ IE _____ QA _____ Date: _____

Hot Thermal Conditioning start time: _____
Time Passive Flange reached +130F: _____
Soak period start time: _____ Soak End Time: _____
Passive Flange Temperatures: (Tx003) _____, (Tx004) _____

Section 5.5.1 (Continued)
DACS Setup

Bolt SN _____ Fix Load Cal _____
Nut SN _____ Torque Cal _____
Data File _____

Cycle 23 Fixture Load=_____
Torque In=_____, Torque Out=_____

Max Load and Torque In requirements met per Section 3.2A: (Fixture Load > 19,300 lbs., Torque < 1600 in-lbs.)
TC_____ IE _____ QA _____ Date: _____

Ambient Thermal Conditioning start time: _____
Time Passive Flange reached +70F: _____
Soak period start time: _____ Soak period end time: _____
Passive Flange Temperatures: (Tx003) _____, (Tx004) _____

DACS Setup

Bolt SN _____ Fix Load Cal _____
Nut SN _____ Torque Cal _____
Data File _____

Cycle 24 Fixture Load=_____
Torque In=_____, Torque Out=_____

Max Load and Torque In requirements met per Section 3.2A: (Fixture Load > 19,300 lbs., Torque < 1600 in-lbs.)

TC_____ IE _____ QA _____ Date: _____

Instrumentation ready for chamber repressurization. IE _____

Chamber at ambient pressure (time): _____

Vacuum Functional Test Complete.

TC_____ QA _____ Date: _____

Section 5.6 Data Verification

Data transferred to disk. Disk labeled per Appendix D.

IE_____ QA _____ Date: _____

Data Verification Complete per 5.6 steps A through D.

TC_____ IE _____ Date: _____

Section 5.7 DACS Safing and Power Down
Verify complete (if needed) per 5.7 steps A through B.

IE_____ Date: _____

Section 5.8 Vacuum Test Teardown
Visual Inspection comments:

_____
_____
_____
_____

TC_____ Shop _____ QA _____ Date: _____

Test Complete per D683-85130-9.

Section 6.3 Facility Location: _____

Section 6.3.1 Instrumentation and Test Fixture Setup
Fixture Assy P/N: _____
Setup complete.

Shop_____ IE _____ QA _____ Date: _____

Section 6.3.2 Instrumentation and Test Fixture Checkout

S/W Name: _____ Rev: _____

Fixture Load Reading _____

Checkout complete.

IE_____ Date: _____

Section 6.4 Test Article Setup

Torque Wrench ID. (0-150 in-lbs.) _____ Cal Due: _____
DACS ID._____ Cal Due Date: _____
Fixture Load Cell ID _____Cal Due Date: _____
Torque Cell ID _____ Cal Due Date: _____
Test Article P/N: _____ S/N _____
Mating Component P/N: _____
Mating Component S/N _____
Flange Gap Measurement: _____

Setup Complete.

Shop _____ TC _____ QA _____ Date: _____

Section 6.5.1 Functional Performance Test Setup

Test Article installed and checkout complete per 4.5.1 step A.
Test Team ready for test start per 4.5.1 step B.
TC _____ Date: _____

Section 6.5.2 DACS Setup

Bolt SN _____ Fix Load Cal _____
Nut SN _____ Torque Cal _____
Data File _____

DACS Setup Complete.

TC_____ Date: _____

Section 6.5.3 Functional Test Run

Verify Test area is clear. TC _____

Record the following ambient conditions:

Temperature _____^{o}F, Relative Humidity _____%, Pressure _____

Functional Test Start Time _____

Functional Test Complete (Cycle 25).

TC_____ Date: _____

Section 6.6 Data Verification

Verify data meets the criteria of Section 3.2A.

Record Max Loads and Max Torque values for each cycle:

Cycle 25 Fixture Load = _____

Torque In=_____, Torque Out=_____

Max Load and Torque In requirements met per Section 3.2A: (Fixture Load $>$19,300 lbs., Torque<1600 in-lbs.)

Data Verification compete.

TC_____ IE _____ QA: _____ Date: _____

Section 6.7 DACS Safing and Power Down

Verify complete (if needed) per 4.7 steps A through B.

IE_____ Date: _____

Section 6.8 Functional Test Teardown

Visual Inspection comments:

_____

_____

Teardown Complete.

TC_____ Shop _____ QA _____ Date: _____

Section 6.9 Vibration Facility
Location:_____
Facility Readiness complete.

TC_____ Date: _____

Section 6.9.1 Axial Vibration Test Setup

Verify Locking Torque:
Torque Wrench ID. (0-25 in-lbs) _____ Cal Due: _____
Lowest Locking Torque: _____ in-lbs

Torque Wrench ID.(0 to 150 in-lbs.) _____ Cal Due: _____
Torque Wrench ID.(0 to 150 ft-lbs.) _____ Cal Due: _____
Fixture Mounting Bolt Torque Value: _____
Record number of test articles setup for this run _____
Record SN's of other test articles (if any)
_____
Torque value mounting bolt #1 (inside bolt) _____
Torque value mounting bolt #2 (outside Bolt) _____

Setup complete.

TC_____ Shop _____ QA _____ Date: _____

Section 6.9.2 Axial Vibration Test
Verify Test Area is clear and Test Team ready for test. TC _____

Random Vibration Test Start Time _____
Random Vibration Test Stop Time _____

Axial Vibration Test complete.

TC_____ Date: _____

Section 6.9.3 Axial Vibration Teardown
Visual Inspection comments:
_____
_____
Axial Vibration Teardown Complete.

Shop_____ TC _____ QA _____ Date: _____

Section 6.9.4 Radial Vibration Test Setup

Fixture Mounting Bolt Torque Values: _____
Radial Vibration Test Setup complete.

Shop_____ TC_____ Date: _____

Section 6.9.5 Radial Vibration Test
Verify Test Area is clear and Test Team ready for test. TC _____

Random Vibration Test Start Time _____
Random Vibration Test Stop Time _____

Radial Vibration Test Complete.

TC_____ Date: _____

Section 6.9.6 Radial Vibration Teardown
Visual Inspection comments:

_____

_____

Radial Vibration Teardown Complete.

Shop _____ TC _____ QA _____ Date: _____

Section 6.9.7 Tangential Vibration Test Setup

Fixture Mounting Bolt Torque Values: _____
Tangential Vibration Test Setup complete.

Shop_____ TC _____Date: _____

Section 6.9.8 Tangential Vibration Test
Verify Test Area is clear and Test Team ready for test. TC _____

Random Vibration Test Start Time _____
Random Vibration Test Stop Time _____

Tangential Vibration Test complete.

TC_____ Date: _____

Section 6.9.9 Tangential Vibration Teardown

Torque Wrench No. _____ Cal Due: _____
Breakaway torque mounting bolt #1 (inside bolt)_____
Breakaway torque mounting bolt #2 (outside bolt) _____
Visual Inspection comments:
_____
_____
Teardown Complete.

TC_____ Shop _____ QA _____ Date: _____

Section 6.10 Vibroacoustic Facility
Location:_____
Fixture Certification expiration date: _____
Facility Readiness complete.

TC_____ Date: _____

Section 6.10.1 Vibroacoustic Test Setup

Verify Locking Torque:
Torque Wrench ID.(0 to 150 in-lbs.) _____ Cal Due: _____
Lowest Locking Torque: _____ in-lbs.

Torque Wrench ID.(0 to 150 in-lbs.) _____ Cal Due: _____
Torque Wrench ID.(0 to 150 ft-lbs.) _____ Cal Due: _____
Record number of test articles setup for this run _____
Record SN's of other test articles (if any)
_____
Torque value mounting bolt #1 (inside bolt) _____
Torque value mounting bolt #2 (outside Bolt) _____
Setup complete.

TC_____ Shop _____ QA _____ Date: _____

Section 6.10.2 Vibroacoustic Test
Verify Test Area is clear and Test Team ready for test. TC _____
Test Start Time _____
Test Stop Time _____

Vibroacoustic Test complete.

TC_____ Date: _____

Section 6.10.3 Vibroacoustic Teardown

Torque Wrench No. _____ Cal Due: _____
Breakaway torque mounting bolt #1 (inside bolt)_____
Breakaway torque mounting bolt #2 (outside bolt) _____
Visual Inspection comments:
_____
_____
Teardown Complete.

TC_____ Shop _____ QA _____ Date: _____

Section 6.11 Facility Location:
_____

Section 6.11.1 Instrumentation and Test Fixture Setup
Fixture Assy P/N: _____
Setup complete.

Shop_____ IE _____ QA _____ Date: _____

Section 6.11.2 Instrumentation and Test Fixture Checkout

S/W Name: _____ Rev: _____

Fixture Load Reading _____

Checkout complete.

IE_____ Date: _____

Section 6.12 Test Article Setup
Torque Wrench ID. (0-150 in-lbs.) _____ Cal Due: _____
DACS ID._____ Cal Due Date: _____
Fixture Load Cell ID _____Cal Due Date: _____
Torque Cell ID _____ Cal Due Date: _____
Test Article P/N: _____ S/N _____
Mating Component P/N: _____
Mating Component S/N _____
Flange Gap Measurement: _____

Setup Complete.

Shop _____ TC _____ QA _____ Date: _____

Section 6.12.1 Functional Performance Test Setup

Test Article installed and checkout complete per 4.5.1 step A.
Test Team ready for test.
TC _____ Date: _____

Section 6.12.2 DACS Setup

Bolt SN _____ Fix Load Cal _____
Nut SN _____ Torque Cal _____
Data File _____

DACS Setup Complete.

TC_____ Date: _____

Section 6.12.3 Functional Test Run

Verify Test area is clear. TC _____
Record the following ambient conditions:
Temperature _____^{o}F, Relative Humidity _____%, Pressure _____
Functional Test Start Time _____

Functional Test Complete (Cycles 26-28).

TC_____ Date: _____

Section 6.13 Data Verification

Verify data meets the criteria of Section 3.2A.
Record Max Loads and Max Torque values for each cycle:

Cycle 26 Fixture Load = _____
Torque In=_____, Torque Out=_____

Cycle 27 Fixture Load = _____
Torque In=_____, Torque Out=_____

Cycle 28 Fixture Load = _____
Torque In=_____, Torque Out=_____

Max Load and Torque In requirements met per Section 3.2A: (Fixture Load $>$19,300 lbs., Torque$<$1600 in-lbs.)

Data Verification complete.

TC_____ IE _____ QA: _____ Date: _____

Section 6.14 DACS Safing and Power Down
Verify complete.

IE_____ Date: _____

Section 6.15 Functional Test Teardown
Visual Inspection comments:
_____
_____
Teardown Complete.

TC_____ Shop _____ QA _____ Date: _____

Section 7.1 Facility Location: _____

Section 7.1.1 Instrumentation and Test Fixture Setup
Fixture Assy P/N: _____
Setup complete.

Shop_____ IE _____ QA _____ Date: _____

Section 7.1.2 Instrumentation and Test Fixture Checkout

S/W Name: _____ Rev: _____

Fixture Load Reading _____

Checkout complete.

IE_____ Date: _____

Section 7.2 Test Article Setup

Torque Wrench ID. (0-150 in-lbs.) _____ Cal Due: _____
DACS ID._____ Cal Due Date: _____
Fixture Load Cell ID _____Cal Due Date: _____
Torque Cell ID _____ Cal Due Date: _____
Test Article P/N: _____ S/N _____
Mating Component P/N: _____
Mating Component S/N _____
Flange Gap Measurement: _____

Setup Complete.

Shop _____ TC _____ QA _____ Date: _____

Section 7.3 Functional Performance Test Setup

Test Article installed and checkout complete.
Test Team ready for test.
TC _____ Date: _____

Section 7.4 DACS Setup

Bolt SN _____ Fix Load Cal _____
Nut SN _____ Torque Cal _____
Data File _____

DACS Setup Complete.

TC_____ Date: _____

Section 7.5 Functional Test Run

Verify Test area is clear. TC _____
Record the following ambient conditions:
Temperature _____^{o}F, Relative Humidity _____%, Pressure _____
Functional Test Start Time _____

Functional Test Complete (Cycles 29).

TC_____ Date: _____

Section 7.6 Data Verification

Verify data meets the criteria of Section 3.2A.
Record Max Loads and Max Torque values for each cycle:

Cycle 29 Fixture Load = _____
Torque In=_____, Torque Out=_____

Max Load and Torque In requirements met per Section 3.2A: (Fixture Load >19,300 lbs., Torque<1600 in-lbs.)

Data Verification complete.

TC_____ IE _____ QA: _____ Date: _____

Section 7.7 DACS Safing and Power Down

Verify complete.

IE_____ Date: _____

Section 7.8 Functional Test Teardown

Visual Inspection comments:

_____

_____

Teardown Complete.

TC_____ Shop _____ QA _____ Date: _____

Acceptance Test Complete per D683-85130-9

TC_____ IE _____ QA: _____ Date: _____

SUMMARY OF TEST

Record Test Article Name, P/N and S/N.

Test Article Name: _____
Test Article PN: _____
Test Article SN: _____
IRSO MACCS ID: _____

Record Data File Name for this Test Article:

_____

Record Data Disk Label information:

_____
_____
_____
_____
_____
_____
_____

This Test Article has passed the Acceptance Test per D683-85130-9.

TC _____ IE _____ QA _____ Date: _____

Attach this Appendix D to the test articles Work Order.

TC _____ Date: _____

QA_____ Date: _____

(This Page Intentionally Blank