BOEING

PG-3

International Space Station Program

S683–28943, REVISION E PASSIVE COMMON BERTHING MECHANISM Critical Item Development Specification

EAR 99. This document contains data within the purview of the U.S. Export Administration Regulations (EAR), 15 CFR 730-774, and is export controlled. The document may be used only in the International Space Station (ISS) program to fulfill responsibilities of the Parties or of a Cooperating Agency of an ISS Partner in furtherance of the ISS Intergovernmental Agreement. Re-transfer or disclosure to, or use by, any persons other than citizens of ISS Program International Partner countries, or use for any other purpose, requires prior U.S. Government authorization.

INTERNATIONAL SPACE STATION

OCTOBER 07, 1998

Submitted to: The Boeing Company
Houston, Texas
Contract No. NAS15-10000 (SDRL BH054A)

RTM Generated

S683–28943, REVISION E
CAGE CODE. 3A768
OCTOBER 07, 1998

CRITICAL ITEM DEVELOPMENT SPECIFICATION

FOR

PASSIVE COMMON BERTHING MECHANISM

Type B2

CONFIGURATION ITEM NO. 683A50A

CONTRACT No. NAS15–10000

SDRL SEQUENCE No. BH054

Prepared for:

International Space Station

Prepared by:

Boeing Defense & Space Group
Missiles & Space Division
(a division of The Boeing Company)
Huntsville, Alabama

AUTHENTICATED BY:_____ DATE:_____

APPROVED BY:_____ DATE:_____

REVISION AND HISTORY PAGE		
REV.	**DESCRIPTION**	**PUB. DATE**
Initial	ECP BE00491-1,baselined per MC3-01-789	(10-31-91)
Revision A	ECP BE00447, baselined per MC3–01–1009. This revision incorporates the Work Package –01 applicable "no–cost" requirements of SSP 30000, Revision K as baselined by Level II Change Directive BB000991C. Requirements which contain cost impacts are documented in Level III CCBD MC3–01–705B. The following are also included in this revision per Boeing and MSFC agreement: 1) clarification of fault detection and fault isolation restructure requirements; 2) document quality assurance inputs. With the flow–down of requirements from SS–SRD–0001, Sec. 3, the following changes are also included in the B–specifications per MSFC and Boeing agreement: 1) Incorporation of MSFC "exceptions" to initial baseline; 2) reformatting of Maintainability (sec. 3.2.4), Reliability (sec. 3.2.3), and Safety (sec. 3.3.6); 3) document quality assurance inputs; and 4) incorporation of "open" PDR RIDs. SCNs incorporated: 1, 2, 4.	23 June 1992
Revision B	ECP BE00691–4 Incoporates changes necessary to specifications in concert with the current Space Station Freedom architectural baseline. This revision includes the following changes that are necessary for MTC CDR: a. Addition of qualification phase verifications, Section 4. (Guidelines for Section 4 format and content are documented in Boeing memo 2–H8AA–AW–091, 28 September 1992, to which MSFC and Boeing agreed during the "table–top" reviews of draft Section 4's, from June through November, 1992. These guidelines allow changes to Sections 3 and 5 requirements, if needed, to write verifications or to improve document quality.) b. Definitions added to Section 6 per the above memo. c. Incorporation of the following Specification Change Notices: 3R1, 6, 7, 8, and 9. d. Revisions of boilerplate sections 3.2.3 through 3.6 to more accurately reflect the current design requirements baseline. e. Revision of the applicable documents Section 2, in concert with the above changes to the text, which added or deleted reference documents. f. Errata changes, which is required in non–technical areas to ensure correct spelling, acronym usage, page numbering and table/figure referencing.	5 November 1993

REVISION AND HISTORY PAGE		
REV.	**DESCRIPTION**	**PUB. DATE**
Revision C	BHE 0001 Release Per ISSA requirements per ECP BHE 0001. The original version created under the Freedom Program ECP BE 00798 was canceled. There was an outstanding SCN (14) against this specification. This SCN along with 14 others that were pending, have been overcome by ISSA ECP BHE 001are listed below: 3R2, 5, 10, 11, 12, 13, 15, 17B, 18, 19, 20, 21, and 22	12 July 1995
Revision D	Revision D is a complete revision prior to Functional Configuration Audit (FCA). Revision D is release per ISS requirements to incorporate the following ECPs, PRRs and SCNs: PG3 numbers: ECP BHE 0054, BHE 0005 and BHE 0092 Common ECP number: BHE 00263 PRRs PRR PG3–1378 and PRR PG3–1665 SCNs 23 and 24	10 April 1998
Revision E	Revision E is a complete revision including Functional Configuration Audit (FCA) comments. Revision E is release per ISS requirements to incorporate the following PRR and ECP: PRR: PRR PG3–1665 ECP: ECP BHE1665	07 Oct 1998

INTERNATIONAL SPACE STATION

PASSIVE COMMON BERTHING MECHANISM

OCTOBER 07, 1998

CONCURRENCE

PREPARED BY:	Lori Lindvall	2–8C10
	PRINT NAME	ORGN
	Signed	98–09–28
	SIGNATURE	DATE
ENGINEER:	James Hodgins	2–8440
	PRINT NAME	ORGN
	Signed	98–09–28
	SIGNATURE	DATE
CHECKED BY:	Nathan L. Miller	2–8440
	PRINT NAME	ORGN
	Signed	98–09–29
	SIGNATURE	DATE
CONCURRED BY:	Earl Davis	2–8440
	PRINT NAME	ORGN
	Signed	98–09–29
	SIGNATURE	DATE
SUPERVISED BY:	James R. Farmer	2–8440
	PRINT NAME	ORGN
	Signed	98–09–29
	SIGNATURE	DATE
APPROVED BY:	James R. Farmer for Mark Jinks	2–8440
	PRINT NAME	ORGN
	Signed	98–09–29
	SIGNATURE	DATE
CM:	C. W. McElrath	2–8641
	PRINT NAME	ORGN
	Signed	98–09–28
	SIGNATURE	DATE
QA:	Greg Teague	2–4852
	PRINT NAME	ORGN
	Signed	98–10–01
	SIGNATURE	DATE
DQA:	Pat Cole	2–8641
	PRINT NAME	ORGN
	Signed	98–10–07
	SIGNATURE	DATE

PREFACE

This document is prepared in accordance with Contract NAS15–10000.

SPECIFICATION CHANGE HISTORY

Specification No. S683–28943, REVISION E

SCN No.	ECP No.	SCN Approval (SA No.)	SCN Approval Date	Specification Pages Affected	Serial Number Effectivity
1	BE00442	MC3-01-880	3-24-92	v, 13, 13a	
2	BE00522	MC3-01-934	4-28-92	v, 6, 7, 57, 58, 78, 79	
3R1	BE00512R1	MC3–01–773	11–22–91	v, x, 14, 14a, 14b, 77, 77a, 103, 103a	
4	BE00450	MC3-01-906	4-7-92	v, 5, 7, 57, 58, 78, 79	
5	BE00603			v, 5, 7, 49, 50, 50a	
6	BE00621	AP52 (92-06-177-G)	6-5-92	v, 4, 62, 87	
7	BE00601	Cont Mod 131	4-22-92	v, 78	
8	BE00730	AP52 (92–10–380–C)	10–21–92	v, x, 5, 30, 31, 32	
9	BE00718	AP52 (92–08–283–C)	8–25–92	v, 12, 12a, 12b, 76, 76a, 76b, 102, 102a	
10	BHE00803	Overridden by ISSA Requirements			
11	BHE00601R1				
12	BHE00975	Overridden by ISS Requirements			
13	BHE00837	Overridden by ISS Requirements			
14	BHE00837	Overridden by ISS Requirements			

SPECIFICATION CHANGE HISTORY

Specification No. S683–28943, REVISION E

SCN No.	ECP No.	SCN Approval (SA No.)	SCN Approval Date	Specification Pages Affected	Serial Number Effectivity
15	BE00847	Overridden by ISS Requirements			
16	BE00854	Overridden by ISS Requirements			
17B	BE00811R2	Overridden by ISS Requirements			
18	BE00971	Overridden by ISS Requirements			
19	BE00695R1	Overridden by ISS Requirements			
20	BE00907	Overridden by ISS Requirements			
21	BE00860	Overridden by ISS Requirements			
22	BE00923	Overridden by ISS Requirements			
23	BE0054		21 Jun 1996	21	
24	BE0092		28 Jul 1996	5	

TABLE OF CONTENTS

PARAGRAPH		PAGE
3	REQUIREMENTS.	5
3.1	CRITICAL ITEM DEFINITION.	5
3.1.1	ACTIVE.	5
3.1.2	PASSIVE.	5
3.1.3	PASSIVE COMMON BERTHING MECHANISM FUNCTIONAL DIAGRAM.	5
3.1.4	INTERFACE DEFINITIONS.	5
3.1.4.1	PASSIVE COMMON BERTHING MECHANISM TO PRESSURIZED ELEMENT.	5
3.1.4.2	PASSIVE COMMON BERTHING MECHANISM TO ACTIVE COMMON BERTHING MECHANISM.	5
3.1.4.3	PCBM TO PRESSURIZED ELEMENT IVA SEAL.	5
3.1.5	COORDINATE SYSTEM.	5
3.2	CHARACTERISTICS.	9
3.2.1	PERFORMANCE REQUIREMENTS.	9
3.2.1.1	ELEMENT BERTHING.	9
3.2.1.1.1	BERTHING VISUAL CUES SYSTEM.	9
3.2.1.1.2	ELEMENT ALIGNMENT.	9
3.2.1.1.2.1	CAPTURE CAPABILITY.	9
3.2.1.1.2.2	ALIGNMENT CAPABILITY.	9
3.2.1.1.3	CAPTURE LOADS.	9
3.2.1.2	IMPACT LOADS.	12
3.2.1.2.1	BERTHING MECHANISM IMPACT RESISTANCE.	12
3.2.1.3	RESERVED.	12
3.2.1.4	ELEMENT RIGIDIZATION.	12
3.2.1.4.1	MECHANISM STATUS WHILE BERTHING.	12
3.2.1.4.2	VESTIBULE LOADS.	12
3.2.1.5	PRESSURIZED VESTIBULE LEAKAGE.	15
3.2.1.6	DEBERTHING OF PRESSURIZED ELEMENTS.	15
3.2.1.7	RESERVED.	15
3.2.1.8	LIFE.	15
3.2.1.8.1	SERVICE LIFE.	15
3.2.1.8.2	LIFE CYCLE.	15
3.2.1.8.3	DEBERTHING STATIC LIFE.	15
3.2.1.8.4	LAUNCH CYCLES.	15
3.2.1.8.5	DE–ORBIT CYCLES.	15
3.2.1.9	PCBM INTERFACE CHARACTERISTICS.	15
3.2.1.9.1	EVA INTERACTION.	15
3.2.1.10	ATMOSPHERIC SEAL REQUIREMENTS.	15
3.2.1.10.1	SEAL USEFUL LIFE.	15
3.2.1.10.2	VERIFIABLE SEAL LEAKAGE PATHS.	16

TABLE OF CONTENTS (Continued)

PARAGRAPH		PAGE
3.2.1.10.3	NON–VERIFIABLE SEAL LEAKAGE PATHS.	16
3.2.1.10.4	SEAL DEFLECTIONS.	16
3.2.1.10.5	PRESSURE SEALING.	16
3.2.1.10.6	SEAL CONTACT.	16
3.2.1.10.7	REPLACEMENT SEAL FUNCTIONALITY/LEAK PATHS.	16
3.2.1.11	RESERVED.	16
3.2.1.12	AIR FLOW THROUGH PCBM.	16
3.2.1.12.1	NEGATIVE AIR FLOW.	16
3.2.1.12.2	POSITIVE AIR FLOW.	16
3.2.1.13	EARLY/LATE ACCESS.	16
3.2.1.14	BERTHING TEMPERATURE LIMITS.	17
3.2.2	PHYSICAL CHARACTERISTICS.	17
3.2.2.1	PCBM/PE ATTACHMENT INTERFACE.	17
3.2.2.1.1	PCBM COMPATIBILITY.	17
3.2.2.2	MAXIMUM COMPONENT SIZE.	17
3.2.2.3	MASS PROPERTIES.	18
3.2.2.3.1	GEOMETRIC ENVELOPE.	18
3.2.2.4	PREBERTHING VISUAL ACCESS.	18
3.2.2.5	CLEAR VIEW VOLUME FOR BERTHING TARGET.	18
3.2.2.6	PASSAGEWAY.	18
3.2.2.7	UTILITY TRANSFER CROSS–SECTION.	18
3.2.3	RELIABILITY.	18
3.2.3.1	OPERATIONAL LIFETIME.	18
3.2.3.2	FAILURE TOLERANCE.	18
3.2.3.2.1	REDUNDANCY STATUS.	20
3.2.3.2.2	FAILURE PROPAGATION.	20
3.2.3.2.3	SEPARATION OF REDUNDANT PATHS.	20
3.2.4	MAINTAINABILITY.	20
3.2.4.1	GENERAL REQUIREMENTS.	20
3.2.4.1.1	ACCESS ITEM RETENTION.	20
3.2.4.1.2	INSTALLATION/REMOVAL.	20
3.2.4.1.2.1	INCORRECT EQUIPMENT INSTALLATION.	20
3.2.4.1.2.2	LOCKWIRING AND STAKING.	20
3.2.4.2	MEAN MAINTENANCE CREW HOURS PER YEAR.	20
3.2.4.3	FAULT DETECTION, ISOLATION AND RECOVERY (FDIR).	20
3.2.4.3.1	MANUAL FDIR.	20
3.2.5	ENVIRONMENTAL CONDITIONS.	21
3.2.5.1	TEMPERATURE.	21

TABLE OF CONTENTS (Continued)

PARAGRAPH		PAGE
3.2.5.2	PRESSURE.	22
3.2.5.3	HUMIDITY.	22
3.2.5.4	VIBRATION.	22
3.2.5.5	ACOUSTIC.	25
3.2.5.6	ACCELERATION.	27
3.2.5.7	ASCENT/DESCENT PRESSURIZATION	27
3.2.5.8	PLASMA.	27
3.2.5.9	ELECTROMAGNETIC.	30
3.2.5.10	AIRBORNE CONTAMINANTS.	30
3.2.5.11	AIRBORNE HYDROCARBONS.	32
3.2.5.12	ATMOSPHERIC COMPOSITION.	32
3.2.5.13	METEOROIDS AND ORBITAL DEBRIS (M/OD).	32
3.2.5.14	IONIZING RADIATION.	33
3.2.5.14.1	TOTAL DOSE IONIZING RADIATION.	33
3.2.5.15	TRAPPED PARTICLE FLUXES FOR EXTERNAL MATERIALS.	33
3.2.5.16	ELECTROSTATIC DISCHARGE.	33
3.2.5.17	GRAVITY.	33
3.2.5.18	ATOMIC OXYGEN.	33
3.2.5.19	ULTRAVIOLET RADIATION FLUX FOR EXTERNAL MATERIALS.	34
3.2.6	TRANSPORTABILITY.	34
3.3	DESIGN AND CONSTRUCTION.	34
3.3.1	STRUCTURES, MATERIALS, PROCESSES AND PARTS.	34
3.3.1.1	STRUCTURES.	34
3.3.1.1.1	SAFE LIFE/FAIL–SAFE DESIGN.	35
3.3.1.1.2	SECONDARY STRUCTURES.	35
3.3.1.1.3	MARGINS FOR SAFETY (MS)/FACTORS OF SAFETY (FS).	35
3.3.1.1.4	ALLOWABLE MECHANICAL PROPERTIES.	35
3.3.1.1.5	FRACTURE CONTROL.	35
3.3.1.1.6	FATIGUE.	35
3.3.1.1.7	CREEP.	35
3.3.1.1.8	STRESS ANALYSIS.	35
3.3.1.1.9	PRESSURE VESSELS.	35
3.3.1.2	MATERIALS AND PROCESSES.	36
3.3.1.2.1	MATERIALS SELECTION.	36
3.3.1.2.2	METALLIC MATERIALS.	36
3.3.1.2.2.1	STRESS CORROSION.	36
3.3.1.2.2.2	CORROSION PROTECTION.	36
3.3.1.2.2.3	LIQUID OXYGEN AND GASEOUS OXYGEN (LOX/GOX) AND PROPELLANT COMPATIBILITY.	36

TABLE OF CONTENTS (Continued)

PARAGRAPH		PAGE
3.3.1.2.3	NONMETALLIC MATERIALS.	36
3.3.1.2.3.1	SELECTION CRITERIA.	36
3.3.1.2.3.2	FLAMMABILITY, LOX/GOX, TOXICITY, ODOR AND PROPELLANT COMPATIBILITY.	36
3.3.1.2.3.3	STATIC AGE LIFE.	36
3.3.1.2.3.4	USEFUL AGE LIFE.	36
3.3.1.2.3.5	THERMAL VACUUM STABILITY (OUTGASSING).	36
3.3.1.2.3.6	MOISTURE AND FUNGUS RESISTANCE.	36
3.3.1.2.3.7	LUBRICANTS.	37
3.3.1.3	PARTS.	37
3.3.1.3.1	FASTENERS.	37
3.3.1.3.2	NONSTANDARD FASTENERS.	37
3.3.1.3.3	BOLTS.	37
3.3.2	ELECTROMAGNETIC COMPATIBILITY (EMC).	37
3.3.2.1	EMC REQUIREMENTS.	37
3.3.2.2	EMI REQUIREMENTS.	38
3.3.2.3	ELECTRICAL GROUNDING.	38
3.3.2.4	ELECTRICAL BONDING.	38
3.3.3	NAMEPLATES AND PRODUCT MARKING.	38
3.3.4	WORKMANSHIP.	38
3.3.4.1	CLEANLINESS.	38
3.3.5	INTERCHANGEABILITY.	38
3.3.6	SAFETY.	38
3.3.6.1	GENERAL.	38
3.3.6.1.1	CATASTROPHIC HAZARDS.	38
3.3.6.1.2	CRITICAL HAZARDS.	38
3.3.6.1.3	DESIGN FOR MINIMUM RISK.	39
3.3.6.2	DEPRESSURIZATION CAPABILITY.	39
3.3.6.3	TRIPLE CONTAINMENT FOR HAZARDOUS MATERIALS AND CHEMICALS.	39
3.3.6.4	HAZARDOUS ACCUMULATION OF FLUIDS.	39
3.3.6.5	DRAINS, VENTS, AND EXHAUST PORTS.	39
3.3.6.6	EXPOSED SURFACE TEMPERATURES.	39
3.3.6.7	FIRE SUPPRESSION.	39
3.3.6.8	EXTERNAL CORNER AND EDGE PROTECTION.	39
3.3.6.8.1	SHARP EDGES.	39
3.3.6.8.2	THIN MATERIALS.	40
3.3.6.8.3	BURRS.	40
3.3.6.9	EQUIPMENT LOCATED INSIDE HABITABLE VOLUMES.	40
3.3.6.10	SAFETY CRITICAL FASTENERS.	40

TABLE OF CONTENTS (Continued)

PARAGRAPH		PAGE
3.3.7	HUMAN PERFORMANCE AND HUMAN ENGINEERING.	40
3.3.7.1	CREW LOADS.	40
3.3.7.2	ACOUSTIC NOISE EMISSIONS ON–ORBIT.	40
3.3.8	FLIGHT OPERATIONAL SOFTWARE REQUIREMENTS.	40
3.3.9	OUTFITTING PACKAGES.	40
3.3.10	COMPUTATIONAL RESOURCES DESIGN CRITERIA.	42
3.4	DOCUMENTATION.	42
3.5	LOGISTICS.	42
3.5.1	MAINTENANCE.	42
3.5.1.1	ON–ORBIT MAINTENANCE.	42
3.5.1.1.1	CORRECTIVE MAINTENANCE.	42
3.5.1.1.2	IN SITU MAINTENANCE.	42
3.5.1.2	ACCESS FOR ON–ORBIT MAINTENANCE.	42
3.5.1.2.1	VISUAL ACCESS.	42
3.5.1.2.2	PHYSICAL ACCESS.	42
3.5.1.2.3	REMOVAL, REPLACEMENT, AND MODULARITY DESIGN.	42
3.5.1.3	STANDARD ON–ORBIT TOOLS.	42
3.5.1.4	STANDARD ON–ORBIT DIAGNOSTIC EQUIPMENT.	44
3.5.1.5	GROUND MAINTENANCE.	44
3.5.2	SUPPLY.	44
3.5.2.1	MULTIPLE LAUNCH.	44
3.5.3	FACILITIES AND FACILITY EQUIPMENT.	44
3.6	PERSONNEL AND TRAINING.	44
3.6.1	PERSONNEL.	44
3.6.2	TRAINING.	44
3.7	PRECEDENCE.	44
4	QUALITY ASSURANCE PROVISIONS	45
4.1	GENERAL.	45
4.1.1	RESPONSIBILITY FOR VERIFICATION.	45
4.1.2	SPECIAL TESTS AND EXAMINATIONS.	45
4.2	CRITICAL ITEM QUALITY CONFORMANCE INSPECTIONS.	45
4.2.1	REQUIREMENT/VERIFICATION CROSS REFERENCE MATRIX.	45
4.2.1.1	INSPECTION.	54
4.2.1.2	ANALYSIS.	54
4.2.1.3	DEMONSTRATION.	54
4.2.1.4	TEST.	54
4.3	REQUIREMENTS	55
4.3.1	CRITICAL ITEM DEFINITION.	55

TABLE OF CONTENTS (Continued)

PARAGRAPH		PAGE
4.3.2	CHARACTERISTICS.	55
4.3.2.1	PERFORMANCE REQUIREMENTS.	55
4.3.2.1.1	ELEMENT BERTHING.	55
4.3.2.1.1.1	BERTHING VISUAL CUES SYSTEM.	55
4.3.2.1.1.2	ELEMENT ALIGNMENT.	55
4.3.2.1.1.2.1	CAPTURE CAPABILITY.	55
4.3.2.1.1.2.2	ALIGNMENT CAPABILITY.	55
4.3.2.1.1.3	CAPTURE LOADS.	55
4.3.2.1.2	IMPACT LOADS.	55
4.3.2.1.2.1	BERTHING MECHANISM IMPACT RESISTANCE.	55
4.3.2.1.3	RESERVED.	56
4.3.2.1.4	ELEMENT RIGIDIZATION.	56
4.3.2.1.4.1	MECHANISM STATUS WHILE BERTHING.	56
4.3.2.1.4.2	VESTIBULE LOADS.	56
4.3.2.1.5	PRESSURIZED VESTIBULE LEAKAGE.	56
4.3.2.1.6	DEBERTHING OF PRESSURIZED ELEMENTS.	57
4.3.2.1.7	RESERVED.	57
4.3.2.1.8	LIFE.	57
4.3.2.1.8.1	SERVICE LIFE.	57
4.3.2.1.8.2	LIFE CYCLE.	57
4.3.2.1.8.3	DEBERTHING STATIC LIFE.	57
4.3.2.1.8.4	LAUNCH CYCLES.	57
4.3.2.1.8.5	DE–ORBIT CYCLES.	57
4.3.2.1.9	PCBM INTERFACE CHARACTERISTICS.	57
4.3.2.1.9.1	EVA INTERACTION.	57
4.3.2.1.10	ATMOSPHERIC SEAL REQUIREMENTS.	57
4.3.2.1.10.1	SEAL USEFUL LIFE.	57
4.3.2.1.10.2	VERIFIABLE SEAL LEAKAGE PATHS.	58
4.3.2.1.10.3	NON–VERIFIABLE SEAL LEAKAGE PATHS.	58
4.3.2.1.10.4	SEAL DEFLECTIONS.	58
4.3.2.1.10.5	PRESSURE SEALING.	58
4.3.2.1.10.6	SEAL CONTACT.	58
4.3.2.1.10.7	REPLACEMENT SEAL FUNCTIONALITY/LEAK PATHS.	58
4.3.2.1.11	RESERVED.	58
4.3.2.1.12	AIR FLOW THROUGH PCBM.	58
4.3.2.1.12.1	NEGATIVE AIR FLOW.	58
4.3.2.1.12.2	POSITIVE AIR FLOW.	58
4.3.2.1.13	EARLY/LATE ACCESS.	58

TABLE OF CONTENTS (Continued)

PARAGRAPH		PAGE
4.3.2.1.14	BERTHING TEMPERATURE LIMITS.	58
4.3.2.2	PHYSICAL CHARACTERISTICS.	59
4.3.2.2.1	PCBM/PE ATTACHMENT INTERFACE.	59
4.3.2.2.1.1	PCBM COMPATIBILITY.	59
4.3.2.2.2	MAXIMUM COMPONENT SIZE.	59
4.3.2.2.3	MASS PROPERTIES.	59
4.3.2.2.3.1	GEOMETRIC ENVELOPE.	59
4.3.2.2.4	PREBERTHING VISUAL ACCESS.	59
4.3.2.2.5	CLEAR VIEW VOLUME FOR BERTHING TARGET.	59
4.3.2.2.6	PASSAGEWAY.	59
4.3.2.2.7	UTILITY TRANSFER CROSS–SECTION.	59
4.3.2.3	RELIABILITY.	59
4.3.2.3.1	OPERATIONAL LIFETIME.	59
4.3.2.3.2	FAILURE TOLERANCE.	60
4.3.2.3.2.1	REDUNDANCY STATUS.	60
4.3.2.3.2.2	FAILURE PROPAGATIONS.	60
4.3.2.3.2.3	SEPARATION OF REDUNDANT PATHS.	60
4.3.2.4	MAINTAINABILITY.	60
4.3.2.4.1	GENERAL REQUIREMENTS.	60
4.3.2.4.1.1	ACCESS ITEM RETENTION.	60
4.3.2.4.1.2	INSTALLATION/REMOVAL.	61
4.3.2.4.1.2.1	INCORRECT EQUIPMENT INSTALLATION.	61
4.3.2.4.1.2.2	LOCKWIRING AND STAKING.	61
4.3.2.4.2	MEAN MAINTENANCE CREW HOURS PER YEAR.	61
4.3.2.4.3	FAULT DETECTION, ISOLATION AND RECOVERY (FDIR).	61
4.3.2.4.3.1	MANUAL FDIR.	61
4.3.2.5	ENVIRONMENTAL CONDITIONS.	61
4.3.2.5.1	TEMPERATURE.	61
4.3.2.5.2	PRESSURE.	61
4.3.2.5.3	HUMIDITY.	62
4.3.2.5.4	VIBRATION.	62
4.3.2.5.5	ACOUSTICS.	62
4.3.2.5.6	ACCELERATION.	62
4.3.2.5.7	ASCENT/DESCENT PRESSURIZATION.	62
4.3.2.5.8	PLASMA.	62
4.3.2.5.9	ELECTROMAGNETIC.	63
4.3.2.5.10	AIRBORNE CONTAMINANTS.	63
4.3.2.5.11	AIRBORNE HYDROCARBONS.	63

TABLE OF CONTENTS (Continued)

PARAGRAPH		PAGE
4.3.2.5.12	ATMOSPHERIC COMPOSITION.	63
4.3.2.5.13	METEOROIDS AND ORBITAL DEBRIS (M/OD).	63
4.3.2.5.14	IONIZING RADIATION.	63
4.3.2.5.14.1	TOTAL DOSE IONIZING RADIATION.	63
4.3.2.5.15	TRAPPED PARTICLE FLUXES FOR EXTERNAL MATERIALS.	63
4.3.2.5.16	ELECTROSTATIC DISCHARGE.	64
4.3.2.5.17	GRAVITY.	64
4.3.2.5.18	ATOMIC OXYGEN.	64
4.3.2.5.19	ULTRAVIOLET RADIATION FLUX FOR EXTERNAL MATERIALS.	64
4.3.2.6	TRANSPORTABILITY.	64
4.3.3	DESIGN AND CONSTRUCTION.	64
4.3.3.1	STRUCTURES, MATERIALS, PROCESSES, AND PARTS.	64
4.3.3.1.1	STRUCTURES.	64
4.3.3.1.1.1	SAFE LIFE/FAIL–SAFE DESIGN.	64
4.3.3.1.1.2	SECONDARY STRUCTURES.	64
4.3.3.1.1.3	MARGINS FOR SAFETY (MS)/FACTORS OF SAFETY (FS).	64
4.3.3.1.1.4	ALLOWABLE MECHANICAL PROPERTIES.	65
4.3.3.1.1.5	FRACTURE CONTROL.	65
4.3.3.1.1.6	FATIGUE.	65
4.3.3.1.1.7	CREEP.	65
4.3.3.1.1.8	STRESS ANALYSIS.	65
4.3.3.1.1.9	PRESSURE VESSELS.	65
4.3.3.1.2	MATERIALS AND PROCESSES.	65
4.3.3.1.2.1	MATERIALS SELECTION LIST.	65
4.3.3.1.2.2	METALLIC MATERIALS.	65
4.3.3.1.2.2.1	STRESS CORROSION.	65
4.3.3.1.2.2.2	CORROSION PROTECTION.	66
4.3.3.1.2.2.3	FLAMMABILITY, LOX/GOX, AND PROPELLANT COMPATIBILITY.	66
4.3.3.1.2.3	NONMETALLIC METALS.	66
4.3.3.1.2.3.1	SELECTION CRITERIA.	66
4.3.3.1.2.3.2	FLAMMABILITY, LOX/GOX, TOXICITY, ODOR, AND PROPELLANT COMPATIBILITY.	66
4.3.3.1.2.3.3	STATIC AGE LIFE.	66
4.3.3.1.2.3.4	USEFUL AGE LIFE.	66
4.3.3.1.2.3.5	THERMAL VACUUM STABILITY (OUTGASSING).	66
4.3.3.1.2.3.6	MOISTURE AND FUNGUS RESISTANCE.	66
4.3.3.1.2.3.7	LUBRICANTS.	66
4.3.3.1.3	PARTS.	66
4.3.3.1.3.1	FASTENERS.	66

TABLE OF CONTENTS (Continued)

PARAGRAPH		PAGE
4.3.3.1.3.2	NONSTANDARD FASTENERS.	67
4.3.3.1.3.3	BOLTS.	67
4.3.3.2	ELECTROMAGNETIC COMPATIBILITY (EMC).	67
4.3.3.2.1	EMC REQUIREMENTS.	67
4.3.3.2.2	EMI REQUIREMENTS.	67
4.3.3.2.3	ELECTRICAL GROUNDING.	67
4.3.3.2.4	ELECTRICAL BONDING.	68
4.3.3.2.5	CABLE AND WIRE DESIGN AND CONTROL.	68
4.3.3.2.6	ELECTROSTATIC DISCHARGE (ESD).	68
4.3.3.2.7	CORONA.	68
4.3.3.3	NAMEPLATES AND PRODUCT MARKING.	68
4.3.3.4	WORKMANSHIP.	68
4.3.3.4.1	CLEANLINESS.	68
4.3.3.5	INTERCHANGEABILITY.	68
4.3.3.6	SAFETY.	68
4.3.3.6.1	GENERAL.	68
4.3.3.6.1.1	CATASTROPHIC HAZARDS.	69
4.3.3.6.1.2	CRITICAL HAZARDS.	69
4.3.3.6.1.3	DESIGN FOR MINIMUM RISK.	69
4.3.3.6.2	DEPRESSURIZATION CAPABILITY.	69
4.3.3.6.3	TRIPLE CONTAINMENT FOR HAZARDOUS MATERIALS.	69
4.3.3.6.4	HAZARDOUS ACCUMULATION OF FLUIDS.	69
4.3.3.6.5	DRAINS, VENTS, AND EXHAUST PORTS.	69
4.3.3.6.6	EXPOSED SURFACE TEMPERATURES.	69
4.3.3.6.7	FIRE SUPPRESSION.	70
4.3.3.6.8	EXTERNAL CORNER AND EDGE PROTECTION.	70
4.3.3.6.8.1	SHARP EDGES.	70
4.3.3.6.8.2	THIN MATERIALS.	70
4.3.3.6.8.3	BURRS.	70
4.3.3.6.9	EQUIPMENT LOCATED INSIDE HABITABLE VOLUMES.	70
4.3.3.6.10	SAFETY CRITICAL FASTENERS.	70
4.3.3.7	HUMAN PERFORMANCE/HUMAN ENGINEERING.	70
4.3.3.7.1	CREW LOADS.	70
4.3.3.7.2	ACOUSTIC NOISE EMISSIONS ON–ORBIT.	71
4.3.3.8	FLIGHT OPERATIONAL SOFTWARE REQUIREMENTS.	71
4.3.3.9	OUTFITTING PACKAGES.	71
4.3.3.10	COMPUTATIONAL RESOURCES DESIGN CRITERIA.	71
4.3.4	DOCUMENTATION.	71

TABLE OF CONTENTS (Continued)

PARAGRAPH		PAGE
4.3.5	LOGISTICS.	71
4.3.5.1	MAINTENANCE.	71
4.3.5.1.1	ON–ORBIT MAINTENANCE.	71
4.3.5.1.1.1	CORRECTIVE MAINTENANCE.	71
4.3.5.1.1.2	IN SITU MAINTENANCE.	71
4.3.5.1.2	ACCESS FOR ON–ORBIT MAINTENANCE.	71
4.3.5.1.2.1	VISUAL ACCESS.	71
4.3.5.1.2.2	PHYSICAL ACCESS.	72
4.3.5.1.2.3	REMOVAL, REPLACEMENT, AND MODULARITY DESIGN.	72
4.3.5.1.3	STANDARD ON–ORBIT TOOLS.	72
4.3.5.1.4	STANDARD ON–ORBIT DIAGNOSTIC EQUIPMENT.	72
4.3.5.1.5	GROUND MAINTENANCE.	72
4.3.5.2	SUPPLY.	72
4.3.5.2.1	MULTIPLE LAUNCH.	72
4.3.5.3	FACILITIES AND FACILITY EQUIPMENT.	72
4.3.6	PERSONNEL AND TRAINING.	72
4.3.6.1	PERSONNEL.	72
4.3.6.2	TRAINING.	72
4.3.7	PRECEDENCE.	72
4.4	RESERVED.	72
4.5	PREPARATION FOR DELIVERY.	72
5.0	PREPARATION FOR DELIVERY.	73
6.	NOTES.	74
6.1	DEFINITIONS.	74
6.1.1	RESERVED.	74
6.1.2	ALLOWABLE LOAD.	74
6.1.3	ALLOWABLE YIELD LOAD.	74
6.1.4	BERTH.	74
6.1.5	RESERVED.	74
6.1.6	RESERVED.	74
6.1.7	COMPONENT.	74
6.1.8	CONDITION MONITORED ITEM.	74
6.1.9	CORROSION.	74
6.1.10	DEVELOPMENT SPARES.	74
6.1.11	DETECTION.	75
6.1.12	ELEMENT.	75
6.1.13	EXPOSED STRUCTURAL EDGES AND CORNERS.	75
6.1.14	FACTOR OF SAFETY.	75

TABLE OF CONTENTS (Continued)

PARAGRAPH		PAGE
6.1.15	FAILURE.	75
6.1.16	FAILURE PROPAGATION.	75
6.1.17	FAILURE TOLERANCE.	75
6.1.18	FAIL–SAFE.	75
6.1.19	FAULT.	75
6.1.20	RESERVED.	75
6.1.21	FRETTING.	75
6.1.22	FUNCTIONAL CATEGORY.	76
6.1.23	GROSS ISOLATION.	76
6.1.24	HARD BERTH.	76
6.1.25	HOOK.	76
6.1.26	RESERVED.	76
6.1.27	INITIAL SPARES.	76
6.1.28	ISOLATION.	76
6.1.29	LIMIT LOAD.	76
6.1.30	MAXIMUM OPERATING PRESSURE.	76
6.1.31	MISSION SUCCESS.	76
6.1.32	COMPONENT.	77
6.1.33	COMPONENT STATUS.	77
6.1.34	COMPONENT STATUS.	77
6.1.35	PROOF PRESSURE.	77
6.1.36	REPLACEMENT SPARES.	77
6.1.37	SAFE–LIFE.	77
6.1.38	SCAR.	77
6.1.39	SERVICE LIFE.	77
6.1.40	SSMB SURVIVAL.	77
6.1.41	SEGMENT.	77
6.1.42	SINGLE EVENT EFFECT IONIZING RADIATION.	78
6.1.43	STATIC FORCE MARGIN.	78
6.1.44	STATUS INFORMATION.	78
6.1.45	STATIC TORQUE MARGIN.	78
6.1.46	TIME CRITICAL FAILURES.	78
6.1.47	TOTAL MMH/Y.	78
6.1.48	ULTIMATE LOAD.	78
6.1.49	YIELD FS.	78
6.1.50	YIELD LOAD.	79
6.1.51	YIELD MARGIN OF SAFETY.	79
6.2	ACRONYMS AND ABBREVIATIONS.	79

TABLE OF CONTENTS (Continued)

PARAGRAPH PAGE

FIGURES

1. PCBM FUNCTIONAL DIAGRAM 6
2. PCBM INTERFACES 7
3. PCBM COORDINATE SYSTEM (END VIEW) 8
4. PCBM COORDINATE SYSTEM (SIDE VIEW) 8
5. BERTHING GEOMETRY 11
6. THERMAL LIMITS FOR CBM OPERATIONS 17
7. PCBM ENVELOPE 19

TABLES

I. SSRMS BACKDRIVE THRESHOLD (1) 10
II. BERTHING DATA MATRIX 10
III. RIGIDIZED ACBM/PCBM INTERFACE LOADS (LIMIT) 12
IV. CBM STRUCTURAL LOADS SPECTRUM 13
V PCBM COMPONENT FAILURE TOLERANCE 18
VI. ELEMENT TEMPERATURE LIMITS FOR EXTERNAL SUBSYSTEMS AND EQUIPMENT 21
VII. ELEMENT INTERNAL TEMPERATURE LIMITS FOR OPERATING EQUIPMENT 21
VIII. PRESSURE LIMITS FOR SUBSYSTEMS AND EQUIPMENT 22
IX. COMMON CARRIER TRANSPORT RANDOM VIBRATION ENVIRONMENTS 23
X. RANDOM VIBRATION LAUNCH ENVIRONMENT 24
XI. ON–ORBIT RANDOM VIBRATION ENVIRONMENT 24
XII. ORBITER CARGO BAY–FERRY FLIGHT VIBRATION ENVIRONMENT 24
XIII. GROUND TRANSPORTATION AND FERRY FLIGHT ACOUSTIC ENVIRONMENT 25
XIV. ORBITER CARGO BAY COMBINED LIFTOFF/BOOST ACOUSTIC SPECTRUM 26
XV. TRANSPORTATION AND HANDLING LIMIT LOAD FACTORS 28
XVI. EQUIPMENT ACCELERATIONS 29
XVII. ELEMENT PLASMA ENVIRONMENT FOR MAXIMUM CURRENT DENSITY CONDITIONS SPECIES: 80% O+, 18% H+, 2% HE+ 29
XVIII. CONTAMINATION EXPOSURE 30
XIX. CONCENTRATION OF VARIOUS TRACE CONSTITUENTS OF THE EARTH'S SURFACE 31
XX. NORMAL ATMOSPHERIC COMPOSITION FOR CLEAN, DRY AIR AT ALL LOCATIONS (VALID TO 90 KM GEOMETRIC ALTITUDE) 31
XXI. PARAMETERS FOR M/OD ENVIRONMENT DEFINITION 32
XXII. IONIZING RADIATION ENVIRONMENTS 33
XXIII. TRAPPED PARTICLE FLUX ENVIRONMENTS FOR ELEMENT EXTERNAL MATERIALS 33
XXIV. ATOMIC OXYGEN ENVIRONMENT FOR ELEMENT EXTERIORS 34
XXV. ULTRAVIOLET RADIATION FLUX FOR ELEMENT EXTERIORS 34
XXVI. ON–ORBIT CREW LOADS 41
XXVII STANDARD IVA TOOL LIST WITH SNAP–ON CATALOG NUMBERS 43
XXVIII. REQUIREMENT/VERIFICATION CROSS REFERENCE MATRIX 46

1 Scope.

1.1 General.

This specification establishes the performance, design, development, and test requirements for the Passive Common Berthing Mechanism, herein after referred to as the PCBM.

1.2 PCBM overview.

The PCBM is the passive half of a berthing mechanism pair composed of the PCBM and an Active Common Berthing Mechanism (ACBM). The ACBM is described in the Active Common Berthing Mechanism Prime Item Development Specification, S683–29902. The PCBM is a mechanism that when attached to a space station pressurized element, provides for:

a. Provisions to receive the capture and rigidization (berthing) actions of the Active Common Berthing Mechanism (ACBM).

b. Structural load paths between attached pressurized elements, through a berthed ACBM, to sustain internally and externally applied loads.

c. Seals for the containment of attached element atmosphere, by forming two airtight interfaces, one with the space station pressurized element attached to the PCBM and the second, with the berthed ACBM.

d. A passageway for movement of crew, material and equipment between attached elements after berthing, separate internal volume for the installation of utility jumpers between attached elements, and electrical bonding between berthed elements.

e. Deberthing capabilities, when pressurized elements must be separated.

2. APPLICABLE DOCUMENTS.

2.1 Government documents.

The following documents of the exact issue shown form a part of this specification to the extent specified herein. In the event of a conflict between the documents referenced herein and the contents of this specification, the contents of this specification shall be considered a superseding requirement.

SPECIFICATIONS

Federal

Military

HANDBOOKS

STANDARDS

Federal

Military

MIL–STD–130 Rev F	1 MAY 86	Identification Marking of U.S. Military Property
MIL–STD–970	1 OCT 97	Standards and Specifications, Order of Preference for the Selection of

Other Government Agency

MSFC–STD–1249	11 SEP 85	NDE Guidelines and Requirements for Fracture Control Programs

(Non–Government standards and other publications are normally available from the organizations that prepare or distribute the documents. These documents also may be available in or through libraries or other informational services.)

OTHER PUBLICATIONS

Other Government Agency

SN–C–0005 Rev C	15 FEB 89	NASA Specification Contamination Control Requirements for Space Shuttle Program
MM 8070.2		Specifications and Standards Approved Baseline List
NHB 8060.1		Flammability, Odor, and Offgassing Requirements and Test Procedures for Materials in Environments that Support Combustion

NSTS 07700 ICD 2–19001 Volume XIV.	20 AUG 97	Space Shuttle System Payload Accommodations Handbook
SSP 30233 Rev E	27 JAN 95	Space Station Requirements for Materials and Processes
SSP 30234 Rev D	5 AUG 94	Instructions for Preparation of Failure Modes and Effects Analysis and Critical Items List for Space Station
SSP 30245 Rev D, DCN 005 & 006	4 JUN 98	Space Station Electrical Bonding Requirements
SSP 30246	21 JAN 94	Space Station Electrical and Electronic Materials and Process Requirements
SSP 30256:001 Rev E, IRNs 235, 254, 256	31 OCT 94	Space Station Program Extravehicular Activity (EVA) Standard Interface Control Document
SSP 30257:004 Rev D	20 APR 94	Space Station Program Intravehicular Activity Restraints and Mobility Aids Standard Interface Control Document
SSP 30425 Rev B	13 MAY 94	Space Station Program Natural Environment Definition for Design
SSP 30512 Rev C	3 JUN 94	Space Station Ionizing Radiation Design Environment
SSP 30513 Rev B	3 JUN 94	Space Station Ionization Radiation Environment Effects Tests and Analysis Techniques
SSP 30558 Rev B	30 JUN 94	Fracture Control Requirements for Space Station
SSP 30559 Rev B, DCN 01	30 JUN 94	Structural Design and Verification Requirements
SSP 41004 Rev E	6 NOV 97	Common Berthing Mechanism to Pressurized Elements Interface Control Document
SSP 41172 Rev B, DCN 01, 02, 03	1 NOV 95	Qualification and Acceptance Environmental Test Requirements
SSP 50005 Rev B DCNs 001, 002, 003, 004, 005, & 006	9 AUG 95	International Space Station Flight Crew Integration Standard (NASA–STD–3000/T)
SSP 50007 Basic, CN 01	10 MAR 94	International Space Station Inventory System Management Label Specification

2.2 Non–government documents.

The following documents of the exact issue shown form a part of this specification to the extent specified herein. In the event of a conflict between the documents referenced herein and the contents of this specification, the contents of this specification shall be considered a superseding requirement.

Boeing Drawings

Boeing Document

S683–29902	2 FEB 98	Prime Item Development Specification, Type B1 for ISS Active Common Berthing Mechanism
D683–10035–1 Rev D	11 JAN 96	Materials and Processes, Selection, Control and Verification Plan
D683–25910–1		Subsystem–Equipment Single Event Effect Acceptance Criteria

3 REQUIREMENTS.

3.1 Critical item definition.

The Type I Passive Common Berthing Mechanism (PCBM) is the passive half of the berthing mechanism pair. The PCBM is a combination of structural and mechanical components that receive the action of an ACBM during the berthing operation. The PCBM and ACBM join together during berthing to form an airtight, structural interface between space station pressurized elements. The Type II is the same as the Type I PCBM but is limited in temperature differential to no more than 70 degrees F cooler than the ACBM, measured at the outboard flanges and is limited to 1 ground berth and 3 on–orbit berths.

3.1.1 Active.

Not applicable.

3.1.2 Passive.

The PCBM consists of a structural ring and structural and mechanical components. PCBM capture fittings on the PCBM structural ring are acquired by the ACBM capture mechanisms during the capture operation. PCBM alignment structures assist in the alignment of the PCBM with the ACBM during berthing. The berth is rigidized when the PCBM receives the action of the ACBM preload application mechanisms. The PCBM contains the atmospheric seals that form an airtight seal between the PCBM and ACBM after berthing is complete.

3.1.3 Passive Common Berthing Mechanism functional diagram.

The PCBM functional diagram is shown in Figure 1.

3.1.4 Interface definitions.

The PCBM interfaces are described in the following paragraphs and are graphically represented in Figure 2.

3.1.4.1 Passive Common Berthing Mechanism to Pressurized Element.

The PCBM interfaces with a Pressurized Element in accordance with SSP 41004, CBM to Pressurized Elements ICD.

3.1.4.2 Passive Common Berthing Mechanism to Active Common Berthing Mechanism.

The PCBM interfaces with the ACBM for berthing/mating of the pressurized elements that make up the space station.

3.1.4.3 PCBM to pressurized element IVA seal.

The PCBM is scarred to accept a pressurized element to PCBM Intra–Vehicular Activity (IVA) seal in accordance with SSP 41004, Common Berthing Mechanism to Pressurized Elements Interface Control Document.

3.1.5 Coordinate system.

The PCBM coordinate system is a cylindrical system as shown in Figures 3 and 4.

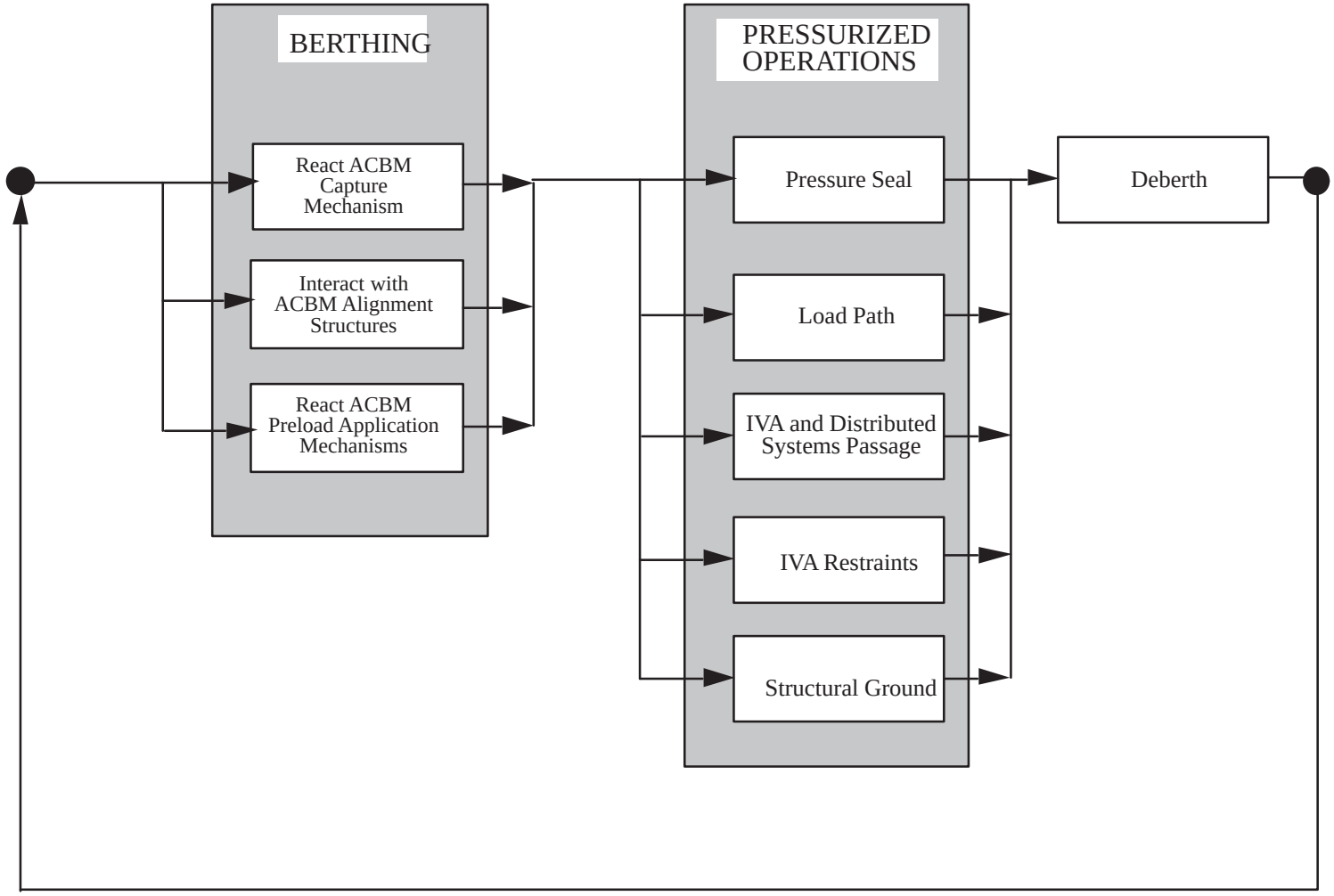

FIGURE 1 PCBM FUNCTIONAL DIAGRAM

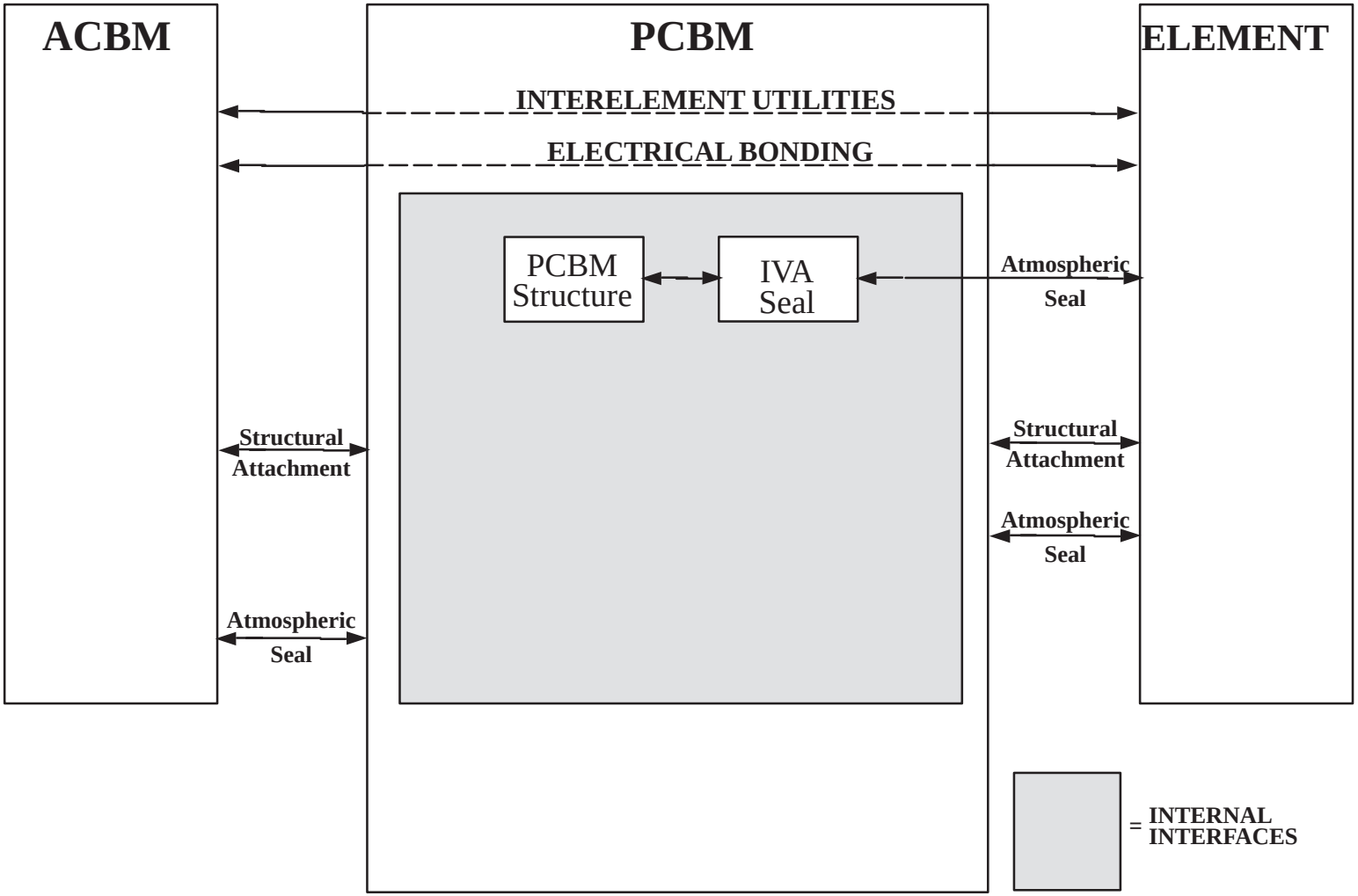

FIGURE 2 PCBM INTERFACES

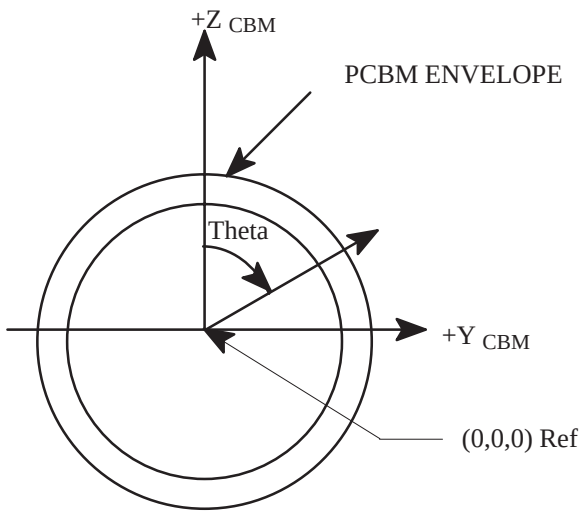

VIEW LOOKING INBOARD AT MODULE

NOTE: The Z–axis zero reference to structure is defined in ICD SSP 41004.

FIGURE 3. PCBM COORDINATE SYSTEM (END VIEW)

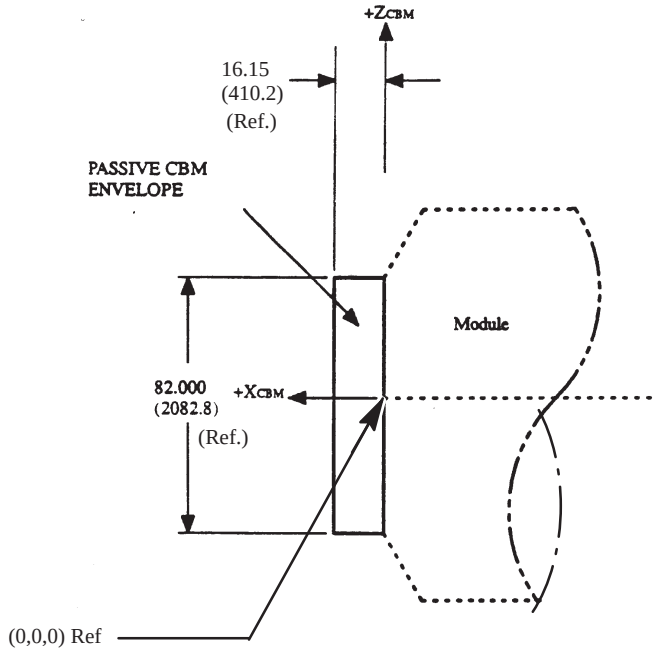

FIGURE 4. PCBM COORDINATE SYSTEM (SIDE VIEW)

3.2 Characteristics.

3.2.1 Performance requirements.

3.2.1.1 Element berthing.

3.2.1.1.1 Berthing visual cues system.

Not applicable.

3.2.1.1.2 Element alignment.

The ACBM/PCBM approach zone is defined by the following initial conditions.

3.2.1.1.2.1 Capture capability.

The PCBM shall be capable of being captured by an ACBM when the PCBM is within the ACBM's indicated ready–to–latch (capture) envelope described by at least the following set of conditions applied simultaneously. The origin of the measurement frame is at the center of the ACBM/PCBM interface plane.

a. A relative axial velocity (+/– XCBM): 0.04 fps

b. A relative lateral velocity (+/– YCBM, +/– ZCBM resultant): 0.04 fps

c. A relative roll velocity (+/– Theta CBM): 0.04 deg/sec

d. A relative lateral angular velocity (Y–Z plane): 0.04 deg/sec

e. A relative axial gap: 3.8 inches

3.2.1.1.2.2 Alignment capability.

The PCBM/ACBM pair shall be capable of achieving the capture envelope parameters cited above after the CBMs have been aligned, with a minimum of 10.0 inches separation, measured from ACBM/PCBM interface planes center–to–center and with at least the misalignment defined as follows:

a. Relative lateral misalignment: 3.0 inches.

b. Relative roll angular misalignment: 1.5 degrees.

c. Relative lateral angular misalignment: 1.5 degrees.

3.2.1.1.3 Capture loads.

Net of PCBM/ACBM contact, the PCBM shall withstand the forces and moments applied by the ACBM to overcome the Remote Manipulator System (RMS) resistance with the brakes applied as specified in Section 10, Appendix A (using high brake torque values) and the SSRMS loads listed in Table I, and with the mass and geometry specified in Table II and Figure 5.

TABLE I SSRMS Backdrive Threshold (1)

Force (2)	49.458 lbf (220N)
Moment (3)	147.512 ft–lbs (200 Nm)

Notes:

(1) When presenting robotic payloads to active berthing fixtures, or other manipulators the SSRMS will provide the capability of backdriving when the forces and moments applied by the payload/user to the tip of the SSRMS reach the values shown in this Table, provided the SSRMS elbow joint angle is not less than 15 degrees from the straight arm configuration.

(2) Force in any direction.

(3) Moment about any axis.

TABLE II Berthing Data Matrix – Continued

Base Mass Properties	Mass (slugs) 12,560	Inertia Tensor (slug–ft^2) Ixx = 4.738 E7 Iyy = 5.585 E6 Izz = 4.985 E7 Ixy = –9.210 E6 Iyz = 1.400 E6 Ixz = 4.540 E6	Base Geometry; SRMS Base Location (inches) (1) Xb = –111.95 Yb = –29.16 Zb = 161.80	ACBM Location (inches) (2) Xb = 183.50 Yb = 20.44 Zb = 56.00
Payload Mass Properties	Mass (slugs) 1,161.341	Inertial Tensor (slug–ft^2) Ixx = 37,640 Iyy = 95,824 Izz = 93,350 Ixy = –1,904 Iyz = –198 Ixz = –1,688	Payload Geometry; SRMS Grapple Fixture Location (inches) Xp = –39.77 Yp = –64.70 Zp = –60.50	PCBM Location (inches) (2) Xp = 173.90 Yp = 4.20 Zp = –2.60

TABLE II Berthing Data Matrix – Continued

SRMS Geometry	(6 inch axial separation between ACBM and PCBM berthing planes) SRMS Joint Angles (degrees) (3) SHY 71.34 SHP –94.04 ELP 48.08 WRP 78.38 WRY 65.91 WRR –15.16 Euler Angles of End Effector Tip with respect to SRMS Base (ORAS_EEOP Euler angles in 2–3–1) (degrees) PITCH = –180.0 (theta about Y) YAW = –41.0 (theta about Z) ROLL = –180.0 (theta about X)
(1) Longeron attach point: (679.5, –96.5, 410.0) inches in OSR frame (2) Point at center of CBM in the berthing plane (3) SRMS joint dynamics frame	

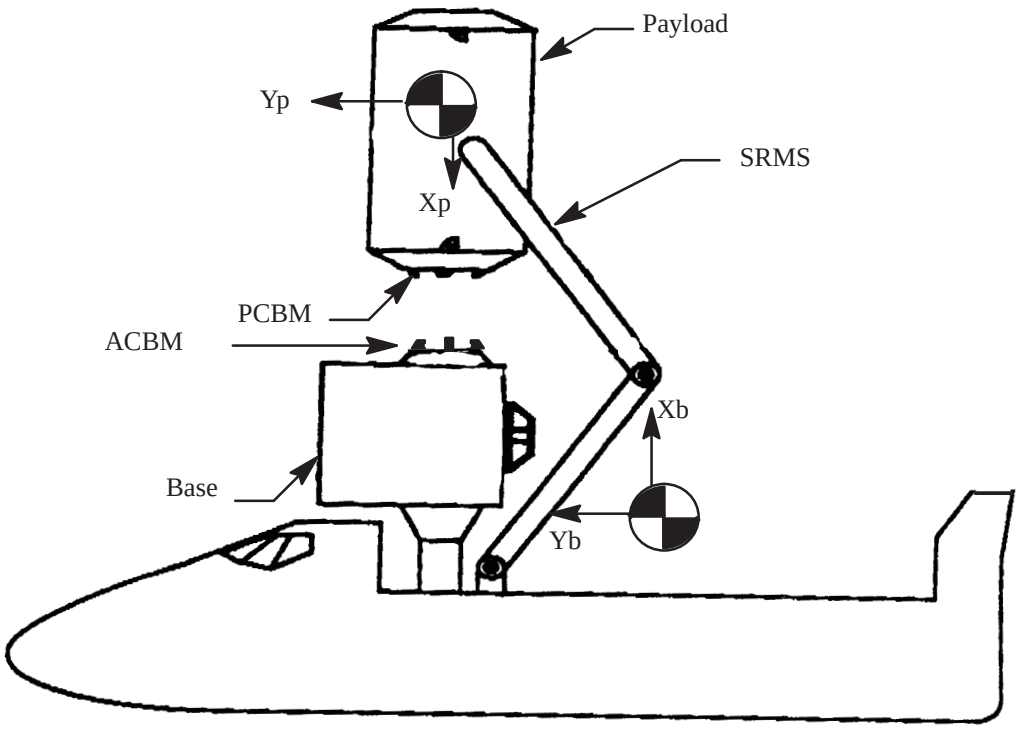

FIGURE 5. Berthing Geometry

3.2.1.2 Impact loads.

3.2.1.2.1 Berthing mechanism impact resistance.

The PCBM shall survive the impact loads resulting from at least the mass and velocities specified below without loss of functionality as specified herein:

a. An element weight : 43,680 lbf.

b. A relative closing velocity : 0.1 fps.

c. A relative lateral velocity : 0.1 fps.

d. A relative roll velocity : 0.2 deg/sec.

e. A relative lateral angular velocity : 0.2 deg/sec.

3.2.1.3 Reserved.

3.2.1.4 Element rigidization.

3.2.1.4.1 Mechanism status while berthing.

Not applicable.

3.2.1.4.2 Vestibule loads.

The PCBM shall receive rigidization of the ACBM/PCBM interface such that the loads of Tables III and IV can be imposed at that interface without loss of functionality.

TABLE III. Rigidized ACBM/PCBM Interface Loads (Limit)

Case	Axial (lb)	RSS Shear (lb)	RSS Bending (in–lb)	Torsion (in–lb)
On–Orbit (Axial Port)	6,480	5,220	772,900	687,200
On–Orbit (Radial Port)	4,500	5,900	442,000	500,000
Launch (1 Cycle)	14,500	24,700	1,746,600	383,600
Landing (1 Cycle)	6,270	23,910	968,450	227,800
Ascent/Decent	11,140	11,430	396,860	87,400

TABLE IV CBM Structural Loads Spectrum – Continued

Steps	Cycles	Min %	MAX %	Description
1	25	0.00 P0	1.00 P0	Bolt/latch Acceptance Testing
2	5	0.00 P0	1.50 P0	Ring Proof/Static Testing
3	2	–1.00 P1	1.00 P1	Transportation/Handling
4	4	–0.90 P1	0.90 P1	Transportation/Handling
5	8	–0.80 P1	0.80 P1	Transportation/Handling
6	15	–0.70 P1	0.70 P1	Transportation/Handling
7	49	–0.60 P1	0.60 P1	Transportation/Handling
8	81	–0.50 P1	0.50 P1	Transportation/Handling
9	178	–0.40 P1	0.40 P1	Transportation/Handling
10	641	–0.30 P1	0.30 P1	Transportation/Handling
11	3,120	–0.20 P1	0.20 P1	Transportation/Handling
12	3,405	–0.10 P1	0.10 P1	Transportation/Handling
13	5,019	–0.07 P1	0.07 P1	Transportation/Handling
14	28,853	–0.05 P1	0.05 P1	Transportation/Handling
15	91,655	–0.03 P1	0.03 P1	Transportation/Handling
16	2	–1.00 P2	1.00 P2	Launch/Landing
17	4	–0.90 P2	0.90 P2	Launch/Landing
18	8	–0.80 P2	0.80 P2	Launch/Landing
19	15	–0.70 P2	0.70 P2	Launch/Landing
20	49	–0.60 P2	0.60 P2	Launch/Landing
21	81	–0.50 P2	0.50 P2	Launch/Landing
22	178	–0.40 P2	0.40 P2	Launch/Landing
23	641	–0.30 P2	0.30 P2	Launch/Landing
24	3,120	–0.20 P2	0.20 P2	Launch/Landing
25	3,405	–0.10 P2	0.10 P2	Launch/Landing
26	5,019	–0.07 P2	0.07 P2	Launch/Landing
27	28,853	–0.05 P2	0.05 P2	Launch/Landing
28	91,655	–0.03 P2	0.03 P2	Launch/Landing
29	61	–1.00 P3	1.00 P3	On–orbit Mechanical
30	1,400	–0.90 P3	0.90 P3	On–orbit Mechanical
31	2,210	–0.80 P3	0.80 P3	On–orbit Mechanical
32	2,770	–0.70 P3	0.70 P3	On–orbit Mechanical
33	8,770	–0.60 P3	0.60 P3	On–orbit Mechanical
34	26,800	–0.50 P3	0.50 P3	On–orbit Mechanical
35	56,400	–0.40 P3	0.40 P3	On–orbit Mechanical
36	220,900	–0.30 P3	0.30 P3	On–orbit Mechanical
37	1,221,000	–0.20 P3	0.20 P3	On–orbit Mechanical

TABLE IV CBM Structural Loads Spectrum – Continued

38	4,046,600	–0.15 P3	0.15 P3	On–orbit Mechanical
39	16,019,500	–0.10 P3	0.10 P3	On–orbit Mechanical
40	19,856,000	–0.05 P3	0.05 P3	On–orbit Mechanical
41	10	0.00 P4	1.00 P4	On–orbit Node Press/Depress
42	60	0.00 P4	1.00 P4	On–orbit MPLM Vestibule Press/Depress
43	1,000	0.67 P4	1.00 P4	On–orbit airlock cycles
44	5,475	0.97 P4	1.00 P4	On–orbit Pressure
45	150	–1.00 P5	1.00 P5	On–orbit Thermal
46	200	–0.90 P5	0.90 P5	On–orbit Thermal
47	500	–0.80 P5	0.80 P5	On–orbit Thermal
48	5,000	–0.70 P5	0.70 P5	On–orbit Thermal
49	50,000	–0.60 P5	0.60 P5	On–orbit Thermal
50	30,000	–0.50 P5	0.50 P5	On–orbit Thermal
51	20,000	–0.40 P5	0.40 P5	On–orbit Thermal
52	5,100	–0.30 P5	0.30 P5	On–orbit Thermal
53	0	–0.20 P5	0.20 P5	On–orbit Thermal
54	0	–0.10 P5	0.10 P5	On–orbit Thermal
55	60	0.00 P6	1.00 P6	On–orbit Bolt/Latch Mechanism Actuation Load

P0 = Maximum limit stress during acceptance testing

P1 = Maximum limit stress during transportation and handling

P2 = Maximum limit stress during shuttle launch and landing

P3 = Maximum limit stress during on–orbit mechanical loading

P4 = Maximum limit stress due to 15.2 psi on–orbit pressure

P5 = Maximum limit stress during on–orbit thermal loading

P6 = Maximum limit stress during on–orbit mechanism actuation

Notes:
1) Acceptance testing cycles envelope component testing under load per the ACBM spec (19,300 lb bolt preload; 250 lb latch load). Ring proof cycles envelope module acceptance testing.
2) Transportation and handling spectrum based on Goddard data; T&H loads assumed to be 80% of the launch limit loads.
3) Launch/landing spectrum based on Goddard data; loads based on ACBM/PCBM spec loads for primary structure (rigidized CBM interface), and appropriate vibroacoustic load factors for components.
4) On–orbit mechanical load cycles envelope worst case ports per DAC #6 summary; loads per ACBM/PCBM specs.
5) On–orbit pressure cycles envelope Node, MPLM and Airlock design cases.
6) On–orbit thermal cycles based on data from Prime Loads group; assume 500 lbs axial and 1910 lbs shear total at the CBM–to–CBM joint.
7) Active CBM must withstand two launch/landing cycles; Passive CBM must withstand 25 launch/landing cycles; ORU's must withstand 4 launch/landing cycles; assume 1 T&H cycle for every launch/landing cycle.

3.2.1.5 Pressurized vestibule leakage.

After rigidization by the ACBM and pressurization of the resulting vestibule, the PCBM shall permit no greater than 0.063 sccs (air) leakage, total of the ACBM/PCBM and PCBM/PE interfaces at beginning of life.

3.2.1.6 Deberthing of pressurized elements.

The PCBM shall provide the net force and moment to overcome the resistance specified in Table I. This force provides for separation of the elements during deberthing.

3.2.1.7 Reserved.

3.2.1.8 Life.

3.2.1.8.1 Service life.

The PCBM shall be capable of berthing and deberthing 25 cycles.

Ground processing shall not diminish the number of berthing cycles. Maintenance of replaceable items is permitted.

3.2.1.8.2 Life cycle.

The Type I PCBM shall be capable of a minimum of 6 on–orbit berths and deberths within any one launch cycle.

The life cycle requirement for a Type II PCBM shall be 1 atmospheric pre–launch cycle, followed by one launch in place mated to an ACBM, plus 3 on–orbit cycle under vacuum conditions.

3.2.1.8.3 Deberthing static life.

Deleted.

3.2.1.8.4 Launch cycles.

The PCBM shall be capable of sustaining 25 launch cycles. Maintenance of replaceable items is permitted.

3.2.1.8.5 De–orbit cycles.

The PCBM structure shall be capable of sustaining 25 de–orbit cycles.

3.2.1.9 PCBM interface characteristics.

3.2.1.9.1 EVA interaction.

The PCBM shall not require on–orbit Extra Vehicular Activity (EVA) preparation for berthing or deberthing the pressurized logistics module.

3.2.1.10 Atmospheric seal requirements.

3.2.1.10.1 Seal useful life.

Non–metallic seal materials shall operate within design parameters for 10 years after anticipated storage time not to exceed 5 years, or seal functionality shall be replaceable on–orbit.

3.2.1.10.2 Verifiable seal leakage paths.

Leak paths which can be verified prior to launch shall have two seal beads (exclusive of leak check ports).

3.2.1.10.3 Non–verifiable seal leakage paths.

Leak path between the common berthing mechanism halves which cannot be verified prior to launch shall have three seal beads exclusive of leak check ports.

3.2.1.10.4 Seal deflections.

Seals shall accommodate structural deflections which occur during launch, ascent, and on–orbit.

3.2.1.10.5 Pressure sealing.

Seals shall not require atmospheric pressure assistance to provide adequate sealing.

3.2.1.10.6 Seal contact.

Seals shall maintain contact with the sealing surfaces with a positive margin.

3.2.1.10.7 Replacement Seal functionality/leak paths.

Seals intended to replace primary seal functionality shall provide not less than n–1 beads, where n = number of primary beads. Seal beads around the Powered Bolt hole on the primary seal can be counted as 1 seal bead for the replacement seal.

3.2.1.11 Reserved.

3.2.1.12 Air flow through PCBM.

3.2.1.12.1 Negative air flow.

The PCBM shall allow a flowrate of 2.6 lbm/sec of air from the external atmospheric environment to the element interface plane with a maximum pressure differential of 0.009 psid during launch operations.

3.2.1.12.2 Positive air flow.

The PCBM shall allow a flowrate of 0.25 lbm/sec of air with a maximum pressure drop of 15.2 psid from the element interface plane to the external atmospheric environment during launch operations.

3.2.1.13 Early/late access.

The PCBM shall not preclude early/late access to the logistics module during ground activities.

3.2.1.14 Berthing temperature limits.

For capture, nut acquisition, and rigidization the Type I PCBM shall operate within the thermal limits defined in Figure 6. For rigidization the Type II PCBM shall operate within the thermal limits defined in Figure 6, excepting that the temperature of the PCBM outboard flange shall not be more than 70 F cooler than that of the ACBM outboard flange.

3.2.2 Physical characteristics.

3.2.2.1 PCBM/PE attachment interface.

The PCBM shall interface with the pressurized element relative to its supporting structure in accordance with SSP 41004.

3.2.2.1.1 PCBM compatibility.

Any PCBM shall be capable of mating with any ACBM.

3.2.2.2 Maximum component size.

Not applicable.

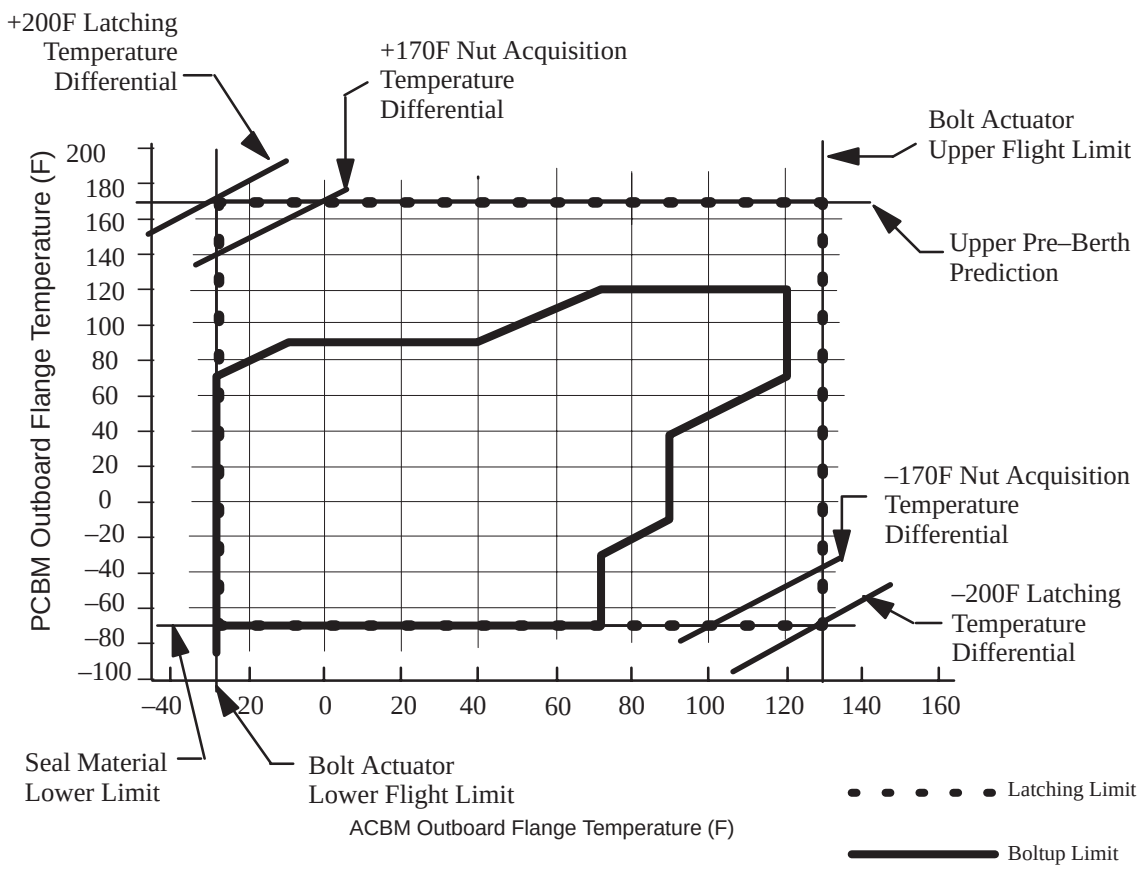

FIGURE 6. THERMAL LIMITS FOR CBM OPERATIONS

3.2.2.3 Mass properties.

The PCBM mass shall not be greater than 440 pounds.

Center of mass shall be in accordance with Figure 7.

3.2.2.3.1 Geometric envelope.

The PCBM shall lie within the envelope shown in Figure 7.

3.2.2.4 Preberthing visual access.

The PCBM shall allow visual access for a preberthing survey of the faying surface.

3.2.2.5 Clear view volume for berthing target.

Not applicable.

3.2.2.6 Passageway.

After berthing, the PCBM shall provide a minimum clear volume between the PCBM/pressurized element interface and the ACBM/PCBM faying surface, as shown in Figure 7.

3.2.2.7 Utility transfer cross–section.

After berthing, the PCBM shall provide a volume of cross–section shown in Figure 7, projected between mated pressurized elements, for the transfer of utilities between mated pressurized elements.

3.2.3 Reliability.

The reliability requirements for the PCBM are specified in the following subparagraphs.

3.2.3.1 Operational lifetime.

The PCBM shall support a station operational life of 10 years. This requirement allows periodic inspections; preventive and corrective maintenance; restoration; replacement of components; and resupply operations.

3.2.3.2 Failure Tolerance.

The PCBM failure tolerances shall be no less than the allocation in Table V for the identified components. Structural components are exempted from failure tolerance requirements.

TABLE V. PCBM Component Failure Tolerance

Component	Failure Tolerance per PCBM	Failure Tolerance per Component
PCBM–to–ACBM Seal	1	0
Power Bolt Nut	1	0

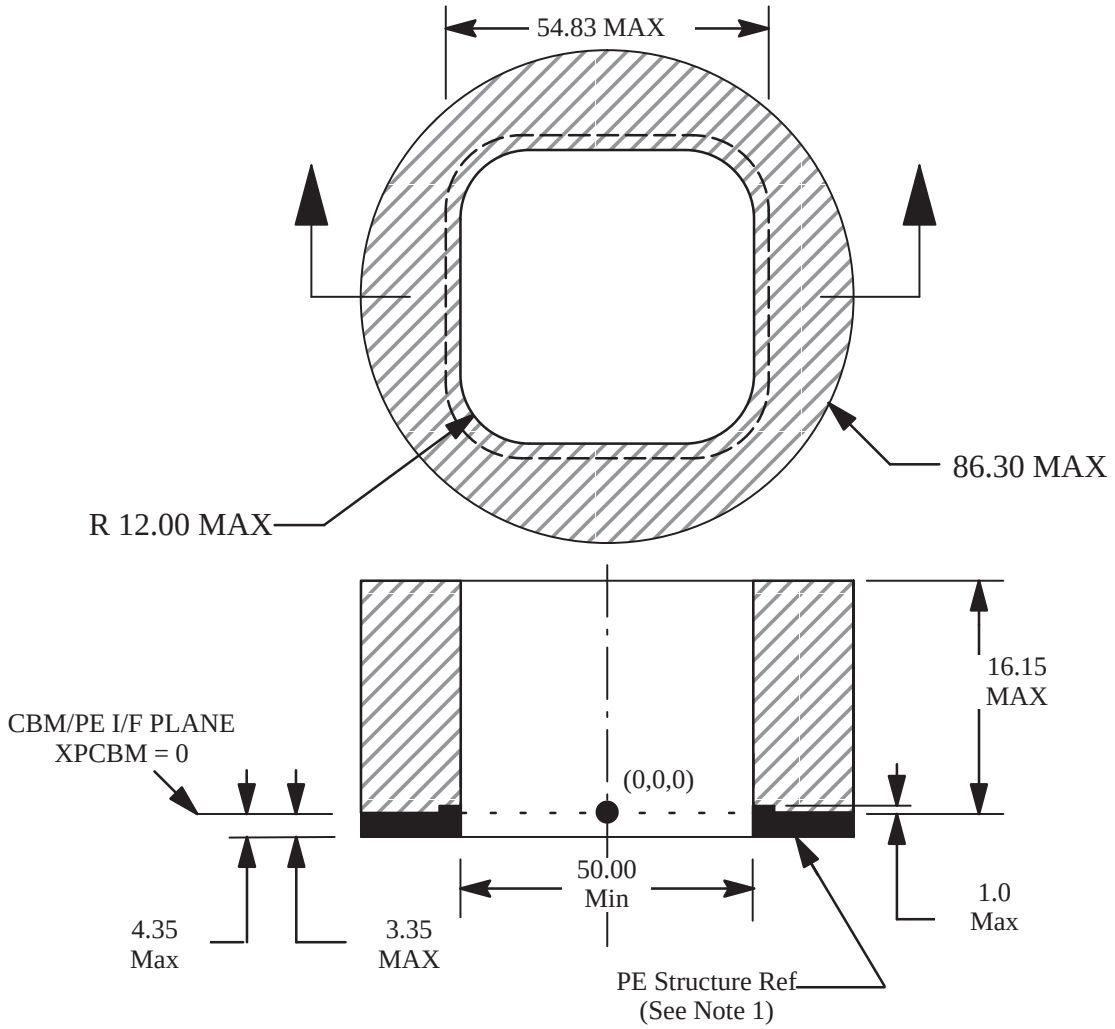

Note 1: PE structure does not apply to the Cupola, PMAs, or Z1 Truss.

Note 2: All dimensions are in inches

Center of Mass (Ring Assembly):

X = 7.75 +/– 0.5
Y = 0.0 +/– 0.5
Z = 0.0 +/– 0.5

CLEAR PASSAGE ENVELOPE

PCBM HARDWARE ENVELOPE

PCBM HARDWARE MAY ENCROACH ON THIS AREA PROVIDED THE INTRUSION DOES NOT INTERFERE WITH PE STRUCTURE

FIGURE 7. PCBM ENVELOPE

3.2.3.2.1 Redundancy Status.

Redundant functional paths shall permit ascertaining their operational status without removal of ORUs.

3.2.3.2.2 Failure propagation.

The equipment shall be designed such that a single failure of a PCBM ORU in a functional path shall not induce any other failures external to the failed ORU.

3.2.3.2.3 Separation of redundant paths.

Alternate or redundant functional paths shall be separated such that any single credible event which causes the loss of one functional path will not result in loss of the alternate or redundant functional path.

3.2.4 Maintainability.

3.2.4.1 General requirements.

Design requirements applicable to the PCBM are as follows:

3.2.4.1.1 Access item retention.

PCBM access covers, caps, and other structural paths removed during on–orbit maintenance shall be compatible with one or more of the restraints and restraint interfaces identified in SSP 30257:004 or SSP 30256:001.

3.2.4.1.2 Installation/removal.

3.2.4.1.2.1 Incorrect equipment installation.

The PCBM ORUs shall contain physical provisions to preclude incorrect installation of equipment and components.

3.2.4.1.2.2 Lockwiring and staking.

Planned maintenance interfaces of the PCBM equipment installations shall not be lockwired or staked.

3.2.4.2 Mean maintenance crew hours per year.

The PCBM shall not exceed the Mean Maintenance Crew Hours per Year (MMCH/Y) resource allocation of 0.05 MMCH/Y for EVA, and 0.4 MMCH/Y for IVA.

3.2.4.3 Fault detection, isolation and recovery (FDIR).

3.2.4.3.1 Manual FDIR.

The PCBM shall be exempt from on–board automatic detection and isolation and may utilize crew interaction or crew observation for manual failure detection, isolation, annunciation, and recovery.

3.2.5 Environmental conditions.

3.2.5.1 Temperature.

The PCBM shall meet specified performance requirements after exposure temperature limits of Table VI and during exposure to the temperature limits of Table VII.

TABLE VI. Element Temperature Limits for External Subsystems and Equipment

Life Cycle Phase	Temperature	Comments
Transportation	–25 to +150 degrees F	Transportation container controlled environment
Ferry Flight	–25 to +150 degrees F	
Storage	–25 to +150 degrees F	
Prelaunch	–25 to +150 degrees F	Payload bay liner temperature
Launch	–25 to +150 degrees F	Payload bay liner temperature
On–orbit (Payload bay doors open)	–70 to +170 degrees F	CBM primary structure surface temperature. High temperature due to trapped radiation effects
Return to Earth (re–entry and post–landing)	–50 to +220 degrees F	Payload bay liner temperature. The low temperature is for an adiabatic payload with an initial –250 degree F bay liner temperature. The high temperature is an empty payload bay.

TABLE VII. Element Internal Temperature Limits for Operating Equipment

Life Cycle Phase	Temperature (degrees F)	Comments
On–orbit (normal operations)	+65 to + 80	Cabin air temperature. Applies to open element spaces and storage racks. Does not include the effects of solar radiation.

3.2.5.2 Pressure.

The PCBM shall meet specified performance requirements when exposed to the following life cycle phase pressure limits shown in Table VIII.

TABLE VIII. Pressure Limits for Subsystems and Equipment

Phase	Pressure	Comments
Transportation / Ferry Flight	9.0 to 15.2 psia	Maximum rate of change = +/– 0.5 psia/min
Storage	13.5 to 15.2 psia	
Prelaunch	13.5 to 15.2 psia	
Launch	15.2 to 5.52×10^{-12} psia	Maximum rate of change = –0.76 psi/sec
On–orbit (payload bay doors open)	5.52×10^{-12} psia	Maximum rate of change = –0.76 psi/sec
On–orbit (normal operations)	15.2 thru 5.52×10^{-12} psia	
On–orbit (depressurization/ repressurization events)	15.2 thru 5.52×10^{-12} psia	
Return–to–Earth (re–entry and post–landing)	5.52×10^{-12} psia to 15.2 psia	Maximum rate of change = +0.3 psi/sec

3.2.5.3 Humidity.

a. Non–operating humidity limits. The PCBM shall meet specified performance requirements after exposure to 0–100% Relative Humidity.

b. Operating humidity. The PCBM components shall meet specified performance requirements when exposed to external humidity levels of 0% relative humidity and internal humidity levels of 25–75% relative humidity.

3.2.5.4 Vibration.

The PCBM shall meet specified performance requirements when exposed to the following life cycle phase vibration environments:

a. Transportation. The random vibration environments for packaged components weighing less than 300 lb during common carrier transportation are defined in Table IX.

b. Ascent. The random vibration launch environment is defined in Table X. Load Factors (LF) are calculated from the Power Spectral Density (PSD) values as LF = 3.0 * sqrt (pi/2 * Q * Fn * Sg)

where

LF = Load factor (g's)
sqrt = Square root
pi = 3.14159
Fn = component fundamental frequency (Hz)
Q = Dynamic amplification factor at Fn (normally Q = 10.0)
Sg = PSD value at Fn (g2/Hz)

c. On–Orbit. The maximum on–orbit vibration is defined in Table XI

d. Ferry flight. The random vibration environment applicable to components weighing 300 lb or less is defined in Table XII.

TABLE IX. Common Carrier Transport Random Vibration Environments

Direction	Frequency (1) (Hz)	Acceleration
Vertical (2)	10 – 40	0.015 g^2/Hz
	40 – 500	–5.5 dB/octave
	500	0.00015 g^2/Hz
	Composite	1.04 grms
Transverse (2)	10	0.00013 g^2/Hz
	10 – 20	7.0 dB/octave
	20 – 30	0.00065 g^2/Hz
	30 – 78	–11.0 dB/octave
	78	0.00002 g^2/Hz
	79 – 120	0.00019 g^2/Hz
	120 – 500	–6.2 dB/octave
	500	0.00001 g^2/Hz
	Composite	0.20 grms
Longitudinal (2)	10 – 20	0.00650 g^2/Hz
	20 – 120	-5.8 dB/octave
	120	0.00020 g^2/Hz
	121 – 200	0.003 g^2/Hz
	200 - 240	–11.4 dB/octave
	240	0.0015 g^2/Hz
	240 - 340	–33.8 dB/octave
	340	0.00003 g^2/Hz
	340 - 500	12.6 dB/octave
	500	0.00015 g^2/Hz
	Composite	0.74 grms

Notes:
(1) For components with resonances below 10 Hz, extend the 10 Hz acceleration to the component resonant frequencies.
(2) Duration: 60 minutes for every 1,000 miles traveled.

TABLE X. Random Vibration Launch Environment

Location	Frequency	Level
Input to endcone mounted equipment. Radial axis (normal to skin)	20 Hz	0.008 g^2/Hz
	20 – 100 Hz	+6.0 dB/oct
	100 Hz	0.20 g^2/Hz
	100 – 125 Hz	+9.32 dB/oct
	125 – 300 Hz	0.40 g^2/Hz
	300– 2000 Hz	–9.0 dB/oct
	2000 Hz	0.00134 g^2/Hz
	Composite	11.9 grms
Input to endcone wall mounted equipment. (Tangential to skin)	20 Hz	0.002 g^2/Hz
	20 – 80 Hz	+5.0 dB/oct
	80 Hz	0.02 g^2/Hz
	80 – 100 Hz	+9.32 dB/oct
	100 – 200 Hz	0.04 g^2/Hz
	200 – 2000 Hz	–9.0 dB/oct
	2000 Hz	0.00004 g^2/Hz
	Composite	3.0 grms

TABLE XI On–Orbit Vibration Environment

Frequency (Hz)	Level g (0–peak)
2 – 200	0.01
200 – 400	–20 dB/oct
400	0.001
Note: A steady–state acceleration of 0.4 g shall be combined with on–orbit vibrations.	

TABLE XII. Orbiter Cargo Bay–Ferry Flight Vibration Environment

Direction	Frequency	Acceleration
Any Direction (1)	60–2000 Hz	0.001 g^2/Hz
	Composite	1.39 grms
Note (1): Duration: 7.08 hours per flight		

3.2.5.5 Acoustic.

The PCBM shall meet specified performance requirements when exposed to the following life cycle phase acoustic environments:

a. Transportation. The acoustic environment for common carrier transport is defined in Table XIII.

b. Ascent. The cargo bay launch acoustic environment is defined in Table XIV.

c. Descent. The cargo bay acoustic environment is defined as the level and spectrum defined in Table XIV, minus 15 dB.

d. Ferry flight. The acoustic environment for ferry flight is defined in Table XIII

TABLE XIII. Ground Transportation and Ferry Flight Acoustic Environment

1/3 Octave Band Center Frequency (Hz)	Sound Pressure Level (dB) (ref. 2×10^{-5} N/m^2)
31.5	109.0
40.0	110.5
50.0	111.5
63.0	112.0
80.0	112.5
100.0	113.0
125.0	113.5
160.0	113.5
200.0	113.0
250.0	112.0
315.0	111.0
400.0	110.0
500.0	109.0
630.0	107.5
800.0	105.5
1,000.0	104.5
1,250.0	103.0
1,600.0	102.0
2,000.0	100.0
2,500.0	98.0
Overall SPL	124.0
Duration	60 minutes per 1,000 miles traveled

TABLE XIV. Orbiter Cargo Bay Combined Liftoff/Boost Acoustic Spectrum

1/3 Octave Band Center Frequency (Hz)	Sound Pressure Level (dB) ref. 2×10^{-5} N/m^2
20.0	121.0
25.0	123.0
31.5	125.0
40.0	127.0
50.0	128.5
63.0	130.5
80.0	131.0
100.0	131.5
125.0	132.0
160.0	132.0
200.0	131.5
250.0	130.0(132.0)*
315.0	129.0(130.0)*
400.0	128.0
500.0	126.0
630.0	124.5
800.0	123.0
1,000.0	120.5
1,250.0	119.0
1,600.0	117.0
2,000.0	115.0
2,500.0	113.0
Overall SPL	141.0
Duration	7.5 sec/mission
* These higher levels are due to Maximum Q transonic event. The Payload bay vents act as individual noise sources for the Payload Bay.	

3.2.5.6 Acceleration.

The PCBM shall meet specified performance requirements when exposed to the following life cycle phase acceleration environments.

a. Transportation. The transportation accelerations are defined in Table XV.

b. Storage. The handling accelerations are defined in Table XV.

c. Prelaunch. Prelaunch accelerations during transport to launch point shall be 2.7 g's acting in any direction.

d. Ascent. Accelerations during liftoff are defined in Table XVI. Liftoff accelerations shall be combined with launch vibrations per SSP 30559, Combining LF and Random Loads for Components and Attachments.

e. On–orbit. Accelerations during on–orbit events shall be 0.4 g's, acting in any direction, assuming a free–free boundary. This is combined concurrently with on–orbit vibration, one axis at a time.

f. Descent. Accelerations during landing are defined in Table XVI.

g. Ferry Flight. Accelerations during Ferry Flight shall be 1.5 g's acting in any direction.

Accelerations shall be combined with Ferry Flight vibrations per SSP 30559, combining LF and Random Loads for Components and Attachments.

3.2.5.7 Ascent/descent pressurization

a. Depressurization. The PCBM to PE interface shall survive a 0.76 psi/sec depressurization rate over the range of 15.2 psia to 5.5E–12 psia (2.7E–10 Torr) without loss of functionality as specified herein.

b. Repressurization. The PCBM to PE interface shall survive a 0.30 psi/sec repressurization rate over the range of 5.5E–12 psia (2.7E–10 Torr) to 15.2 psia without loss of functionality as specified herein.

3.2.5.8 Plasma.

The PCBM shall meet specified performance requirements when exposed to the plasma environments of Table XVII. The difference between the PCBM structure floating potential and the local plasma potential does not exceed +/– 40 volts.

TABLE XV. Transportation and Handling Limit Load Factors

Mode	Load Occurrence	Fore/Aft g's	Lateral g's	Vertical g's
Water	S	+/– 0.5	+/– 1.0	+ 2.5/– 0.5
Air	S	+/– 3.0	+/– 1.5	+ 3.0/– 1.0
Ground Truck or Air Ride Trailer	I	+/– 2.0	+/– 2.0	+ 3.5/– 1.5
Dolly (Max Velocity = 5 MPH)	I	+/– 1.0	+/– 0.75	+ 1.5/+ 0.5
Forklifting	S	+/– 1.0	+/– 0.5	+ 2.0/0.0
Hoisting	I	1.5 In Direction of Travel		

Notes:

a) S – Loads occur simultaneously in the three directions.

b) I – Loads occur independently in the three directions except for gravity.

c) Above Load factors act at C.G. of cargo (vehicle, stage, subassembly, payload, experiment, etc.).

d) Cargo weight < 300 lbs subject to additional loads caused by vibroacoustics for applicable transportation modes.

e) For ground transportation, the support structure, carrier vehicle should be designed for the occurrence of a 30 knot wind in combination with load factors.

f) Cargo support structure will be so designed and/or carrier operations will be constrained to insure that cargo loads will not exceed design load.

g) Directions defined by transportation mode travel directions.

TABLE XVI. Equipment Accelerations

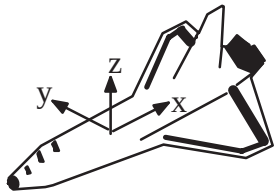

COORDINATE SYSTEM DEFINITION

Acceleration Components	Radial port/endcone Bulkhead Mounted CBM Components (1)
Liftoff (2)	
nx g's	+/– 4.5
ny g's	+/– 2.3
nz g's	+/– 8.1
Landing (2)	
nx g's	+/– 4.1
ny g's	+/– 3.7
nz g's	+/– 6.9

Notes:
(1) Liftoff accelerations shall be combined with launch vibrations per SSP 30559.
(2) Accelerations apply concurrently in all possible combinations for each event.

TABLE XVII. Element Plasma Environment for Maximum Current Density Conditions
Species: 80% O^+, 18% H^+, 2% He^+

Plasma Parameter	Surface Orientation Relative to Orbital Velocity Vector		
	Ram	Wake (1)	Parallel
Charge Density (per ft^3)	8.5×10^{10}	8.5×10^{7}	6.57×10^{10}
Electron Temperature (eV)	0.12	1.0	0.12
Ion Temperature (eV)	4.9 (2)	1.0	0.10
Electron Current Density (mA/ft^2)	1.95	9.3×10^{-2}	1.95
Ion Current Density (mA/ft^2)	2.88×10^{-1}	9.29×10^{-4}	1.11×10^{-2}
Average Ram Oxygen ion (O^+) Sputter Flux ($ions/ft^2s$)	3.53×10^{14}	–	–

Notes:
(1) Wake energy distributions are non–thermal. The wake temperatures reported are approximately the kinetic energy of particles hitting wake surfaces.
(2) Kinetic energy of oxygen ions hitting ram surfaces.

3.2.5.9 Electromagnetic.

Not applicable.

3.2.5.10 Airborne contaminants.

The PCBM shall meet specified performance requirements after exposure to the transportation, storage, prelaunch, and launch airborne contaminant (particulate and microbial) environments specified in Table XVIII.

The PCBM shall meet specified performance requirements during exposure to the on–orbit operations airborne contaminant (particulate and microbial) environments specified in Table XVIII.

TABLE XVIII. Contamination Exposure

Life Cycle Phase		Airborne Particulate Contamination	Airborne microbial Contamination	Atmospheric Composition (Trace Gases)	Airborne Hydrocarbons
Transportation		Transportation modes and equipment will be selected and item packaging designed to protect flight hardware to within prelaunch, launch and on–orbit, non–operating environmental limits. (1)			
Storage	Element internal	Class 300,000 per BAC5703	</= 1000 CFU/m^3	Per Tables XIX	</= 15 ppm as methane equivalent
	Element external				
Pre–launch	Element internal	Class 300,000 per BAC5703	</= 1000 CFU/m^3	Per Tables XX	</= 15 ppm as methane equivalent
	Element external				
On–orbit operations	Element internal	Less than 100,000 particles/ft^3 for particles > 0.5 microns	</= 1000 CFU/m^3	Shall not exceed NHB 8060.1 Appendix D	</= 2700 ppm methane equivalent
	Element external	</= one particle 100 microns or larger per orbit per 1 x 10^{-5} steradian field of view (2)	NA	Shall comply with SSP 30426, Quiescent and non–quiescent periods	Shall comply with SSP 30426, Quiescent and non–quiescent periods

Notes:
(1) Hydrocarbon content will be </= 15 ppm.
(2) As seen by a 1 meter diameter aperture telescope
NA = Not Applicable

TABLE XIX. Concentration of Various Trace Constituents of the Earth's Surface

Constituent	Typical concentration parts per billion by volume (ppbv)
N_20	270
NO	0.5
H_2S	0.5
NH_3	0.05
H_2	4
CH_4	500
CO	1500
SO_2	1.2
CO_2	3.30×10^5
O_3	40
HNO3 (vapor)	0.1
COS	1
CS_2	0.2

TABLE XX. Normal Atmospheric Composition for Clean, Dry Air at All Locations (Valid to 90 Km Geometric Altitude)

Gas	Percent by Volume	Percent by Weight (1)
Nitrogen (N_2)	78.084	75.520
Oxygen (O_2)	20.9476	23.142
Argon (Ar)	0.934	1.288
Carbon Dioxide (CO_2)	0.0314	0.048
Neon (Ne)	1.818×10^{-3}	1.27×10^{-3}
Helium (He)	5.24×10^{-4}	7.24×10^{-5}
Krypton (Kr)	1.14×10^{-4}	3.30×10^{-4}
Xenon (Xe)	8.7×10^{-6}	3.9×10^{-5}
Note (1): On the bases of Carbon 12 isotope scale for which $C^{12} = 12.000$, as adopted by the International Union of Pure and Applied Chemistry, Montreal, 1961.		

3.2.5.11 Airborne hydrocarbons.

The PCBM shall meet specified performance requirements after exposure to the transportation, storage, prelaunch, and launch airborne hydrocarbon environments specified in Table XVIII.

The PCBM shall meet specified performance requirements during exposure to the on–orbit operations airborne hydrocarbon environments specified in Table XVIII.

The PCBM shall be capable of surviving the Return–to–Earth airborne hydrocarbon environments specified in Table XVIII.

3.2.5.12 Atmospheric composition.

The PCBM shall meet specified performance requirements after exposure to the transportation, storage, prelaunch, and launch airborne composition environments specified in Table XVIII.

The PCBM shall meet specified performance requirements during exposure to the on–orbit operations airborne composition environments specified in Table XVIII.

The PCBM shall be capable of surviving the Return–to–Earth airborne composition environments specified in Table XVIII.

3.2.5.13 Meteoroids and orbital debris (M/OD).

The PCBM will be indirectly exposed, through M/D shielding and MLI blankets, to the Meteoroid and Orbital Debris (M/OD) environments defined in SSP 30425. Parameters of Space Station M/OD environments definition are given in Table XXI. The functionality of protecting against this environment is implemented at the Element level and has not been allocated down to the PCBM.

TABLE XXI. Parameters for M/OD Environment Definition

Altitude	215 nautical miles (400 km)
Space Station Altitude	LVLH 10 percent of the time (Orbiter attached) TEA 90 percent of the time (Orbiter not attached)
Orbital Inclination	51.6 degrees
Solar Flux	70×10^4 Jansky ($F_{10.7} = 70$)
Orbital Debris Density	2.8 gm/cm^3
Maximum Debris Diameter	20 cm (1)
Notes: (1) For probability of no penetration assessments only.	

3.2.5.14 Ionizing radiation.

The PCBM shall meet specified performance requirements when exposed to the life cycle phase ionizing radiation environments defined below.

3.2.5.14.1 Total dose ionizing radiation.

The item shall withstand either through design or scheduled maintenance the total ionizing radiation dose defined in Table XXII.

TABLE XXII. Ionizing Radiation Environments

Life Cycle Phase		Total Dose Ionizing Radiation	Single Event Effect Ionizing Radiation
On–Orbit	Element Internal	2.2 krad (Si)	Per D683–25910–1
	Element External	2×10^6 rad (Si) over 30 years (1)	Per SSP 30513
Note (1) Assumes 1 MIL thick aluminum shielding. This number is affected by shielding.			

3.2.5.15 Trapped particle fluxes for external materials.

PCBM surface coatings and materials shall meet specified performance requirements when exposed to the life cycle phase trapped particle flux environments of Table XXIII.

TABLE XXIII. Trapped Particle Flux Environments for Element External Materials

Trapped Particle Flux	Comment
Per SSP 30512	Flux energy for trapped electrons and protons.

3.2.5.16 Electrostatic discharge.

Not applicable.

3.2.5.17 Gravity.

The PCBM assembly shall meet specified performance requirements during exposure to the gravity environment limits of 10 EE–6 g.

3.2.5.18 Atomic oxygen.

The PCBM shall meet specified performance requirements when exposed to the atomic oxygen environments of Table XXIV.

TABLE XXIV. Atomic Oxygen Environment for Element Exteriors

Atomic Oxygen Flux Ram Direction	Atomic Oxygen Fluence	Comments
5.0×10^{21} atoms/cm^2/Year or 4.4×10^{19} atoms/cm^2/day for On–orbit exposure </= 30 days	Integral of phi dt (atoms/cm^2) (1)	SSP 30425 used to estimate flux and fluence over short periods of time. FLUXAV, with MSIS source code used to address Atomic Oxygen flux and fluence over long term activity.
Note (1) Per SSP 30425 analysis required to calculate the fluence and flux as a function of time and angle from the ram direction.		

3.2.5.19 Ultraviolet radiation flux for external materials.

The PCBM shall meet specified performance requirements when exposed to the one sun solar ultraviolet radiation flux environment of Table XXV.

TABLE XXV. Ultraviolet Radiation Flux for Element Exteriors

Ultraviolet Flux (lambda < 400 nm)	Comments
Flux = 118 W/m^2	Defines one Ultraviolet sun (1), (2)
Notes: (1) Per SSP 30425 analysis required to calculate UV and flux for any PCBM location. (2) The lifetime exposure (excluding the Meteoroid/Debris/Thermal cover) to the effects of ultraviolet radiation will not exceed 10 hours.	

3.2.6 Transportability.

The item and its ORUs will be transportable in the environments stated in 3.2.5.

3.3 Design and construction.

Selection of specifications and standards shall be in accordance with the requirements of MIL–STD–970.

Approved NASA specifications and standards shall be selected per MM 8070.2.

3.3.1 Structures, materials, processes and parts.

3.3.1.1 Structures.

3.3.1.1.1 Safe life/fail–safe design.

Structural components including primary and secondary structure whose failure may result in a catastrophic hazard, shall meet the ”Safe–Life Verification” in accordance with SSP 30558, paragraph 4.3.1.

The necessary minimum service interval for ”safe–life” and ”fail–safe” components shall be based on fracture mechanics analysis as described in SSP 30558.

3.3.1.1.2 Secondary structures.

The design of secondary structures shall be in accordance with SSP 30559. The PCBM shall have an on–orbit 15 year structural life.

3.3.1.1.3 Margins for safety (MS)/factors of safety (FS).

The design of structures shall use the appropriate FS defined in SSP 30559.

Structures shall have positive MS for all load conditions.

3.3.1.1.4 Allowable mechanical properties.

Deleted.

3.3.1.1.5 Fracture control.

The structure shall meet the fracture control requirements defined in SSP 30558, SSP 30233 and, MSFC–STD–1249.

3.3.1.1.6 Fatigue.

Fatigue design of the PCBM structure shall be in accordance with SSP 30559.

3.3.1.1.7 Creep.

The design of item flight hardware to prohibit excessive creep strain shall be in accordance with SSP 30559.

3.3.1.1.8 Stress analysis.

The PCBM shall have a positive margin of safety against yielding at yield load and failure in ultimate load.

The proof pressure, as defined in Section 6.0, shall be based on the higher of the maximum design pressure or the pressure required by fracture mechanics.

3.3.1.1.9 Pressure vessels.

Pressure vessels shall meet the structural and fracture control requirements of SSP 30559 and SSP 30558.

3.3.1.2 Materials and processes.

Materials and processes shall be selected, controlled, and documented as defined in SSP 30233 and implemented by D683–10035–1.

3.3.1.2.1 Materials selection.

Deleted.

3.3.1.2.2 Metallic materials.

3.3.1.2.2.1 Stress corrosion.

Deleted.

3.3.1.2.2.2 Corrosion protection.

Deleted.

3.3.1.2.2.3 Liquid oxygen and gaseous oxygen (LOX/GOX) and propellant compatibility.

Deleted.

3.3.1.2.3 Nonmetallic materials.

3.3.1.2.3.1 Selection criteria.

Deleted.

3.3.1.2.3.2 Flammability, LOX/GOX, toxicity, odor and propellant compatibility.

Deleted.

3.3.1.2.3.3 Static age life.

Deleted.

3.3.1.2.3.4 Useful age life.

Deleted.

3.3.1.2.3.5 Thermal vacuum stability (outgassing).

Deleted.

3.3.1.2.3.6 Moisture and fungus resistance.

Deleted.

3.3.1.2.3.7 Lubricants.

Deleted.

3.3.1.3 Parts.

3.3.1.3.1 Fasteners.

Fasteners designed for on–orbit replacement shall conform to the following:

a. Fasteners, including nuts, washers, and screws used in attaching equipment and access covers that may require removal on–orbit shall be captive.

Any other item such as caps and other structural parts that may be removed on–orbit for maintenance or other planned activities shall provide a means for retention in a safe position accessible for replacement.

b. Fastener knobs shall be designed to prevent slipping in the crewperson's hand.

c. Quick opening fasteners shall require a maximum of one complete turn to operate.

d. External hex, internal hex, or double–hex fastener heads shall be used. Internal wrenching fasteners shall be Allen–head type and shall be used only where a smooth surface is required.

e. No straight slot nor Phillips type internal grip fasteners shall be used.

f. Fasteners shall be locked with positive locking devices.

g. Locking compounds shall not be used where excess compound can migrate to surfaces which must be free to move.

h. Threaded inserts shall be used for threaded fasteners in aluminum, magnesium, and plastic.

i. Fittings and mounting plates using oversized or slotted holes for installation adjustment shall not use friction between the faying surfaces to provide locking.

3.3.1.3.2 Nonstandard fasteners.

Use of nonstandard fasteners shall be in accordance with SSP 30559, Section 3.8.

3.3.1.3.3 Bolts.

Bolt design in preloaded joints shall be in accordance with SSP 30559, Preloaded Joint Criteria. Alternatives shall require NASA approval to implementation.

3.3.2 Electromagnetic compatibility (EMC).

3.3.2.1 EMC requirements.

Not applicable.

3.3.2.2 EMI requirements.

Not applicable.

3.3.2.3 Electrical grounding.

Not applicable.

3.3.2.4 Electrical bonding.

Electrical bonding shall be in accordance with SSP 30245 Class H, Class R, and Class S where applicable.

3.3.3 Nameplates and product marking.

Marking for identification shall be in accordance with MIL–STD–130 except 4.1.c and SSP 50005, paragraph 9.5.3.1.

Markings shall remain legible for the service life of the item to which affixed.

Marking techniques shall not degrade the structural integrity of the item.

Spares and loose equipment shall have provisions to apply an automated identification label in accordance with SSP 50007.

3.3.4 Workmanship.

Workmanship shall be in accordance with SSP 30233.

3.3.4.1 Cleanliness.

Interior surfaces of the PCBM shall conform to Visible Clean–Sensitive (VC–S) cleanliness requirements in accordance with SN–C–0005.

3.3.5 Interchangeability.

Not applicable.

3.3.6 Safety.

3.3.6.1 General.

3.3.6.1.1 Catastrophic hazards.

No combination of 2 failures, 2 operator errors or 1 each in the PCBM shall result in a disabling or fatal personnel injury, or loss of 1 of the Orbiter, ISS, or major ground facility.

3.3.6.1.2 Critical hazards.

No PCBM single failure or single operator error shall result in a nondisabling personnel injury, severe occupational illness; loss of an ISS on–orbit life sustaining function or emergency system, or damage to the Orbiter or ground facility.

3.3.6.1.3 Design for minimum risk.

The PCBM primary structure is designated as a design for minimum risk item. Hazards shall be controlled by the safety related properties and characteristics of the design, such as margin or factors of safety.

3.3.6.2 Depressurization capability.

The PCBM shall tolerate the differential pressure of depressurization, repressurization, and the depressurization condition without resulting in a hazard or failure propagation.

3.3.6.3 Triple containment for hazardous materials and chemicals.

Not applicable.

3.3.6.4 Hazardous accumulation of fluids.

Not applicable.

3.3.6.5 Drains, vents, and exhaust ports.

Not applicable.

3.3.6.6 Exposed surface temperatures.

a. The maximum allowable surface temperature for continuous contact with bare skin shall be 113 degrees F.

Incidental or momentary bare skin contact with surface temperatures from 113 degrees to 122 degrees F is permissible.

b. Warning labels shall be provided to alert crewmembers to these excessive temperature levels.

c. Guards or insulation shall be provided to prevent crewmember contact with surface temperatures in excess of 122 degrees F. Where contact with surfaces above this limit is required, adequate warning labels and protective equipment are required.

d. The minimum temperature for surfaces that must be touched with bare skin, shall not be below 39 degrees F. Where contact with surfaces below this limit is required, adequate warning labels and protective equipment are required.

e. During EVA operations, with PCBM exposed to the external environment, the surface temperatures shall be maintained between –180 degrees F to +235 degrees F.

3.3.6.7 Fire suppression.

Materials shall be non–combustible or self–extinguishing.

3.3.6.8 External corner and edge protection.

3.3.6.8.1 Sharp edges.

The PCBM shall protect EVA Crew from injury due to sharp edges by the use of corner and edge guards or by rounding the corners and edges in accordance with NSTS 07700, Volume XIV, Appendix 7, paragraph 2.3, Crew and equipment safety, and Tables II.2–IIa and II.2–IIb.

3.3.6.8.2 Thin materials.

Materials less than 0.08 inch thick, with exposed edges that are uniformly spaced, not to exceed 0.5 inch gaps, flush at the exposed surface plane and shielded from direct EVA interaction, shall have edge radii greater than 0.003 inches.

3.3.6.8.3 Burrs.

Exposed surfaces shall be smooth and free of burrs.

3.3.6.9 Equipment located inside habitable volumes.

Round or slotted holes that are uncovered shall be less than 0.4 inches or greater than 1.0 inches in diameter for equipment located inside habitable volumes.

3.3.6.10 Safety critical fasteners.

Safety critical fasteners shall be designed to prevent inadvertent back out.

3.3.7 Human performance and human engineering.

The PCBM shall be designed in compliance with the applicable requirements of SSP 50005, Human Performance Capabilities.

English units of measure shall be used.

3.3.7.1 Crew loads.

The PCBM shall operate during and after exposure to the crew loads in Table XXVI or be protected from these loads. Positioning of hardware away from crew translation paths, shielding of hardware, labeling of hardware, or positioning of crew restraints and mobility aids for handling of fragile items of hardware are considered acceptable methods of protecting hardware from crew loads.

3.3.7.2 Acoustic noise emissions on–orbit.

Not applicable.

3.3.8 Flight operational software requirements.

Not applicable.

3.3.9 Outfitting packages.

Not applicable.

TABLE XXVI. On–Orbit Crew Loads

Crew System or Structure	Type Load	IVA Load in lbf	EVA Load in lbf	Direction of Load
Personnel Tether	Concentrated load (tension)	170, limit	N/A	Longitudinal axis
Personnel Tether Attach Points	Concentrated load	170, limit	200, limit	Any Direction
Handrail Tether Attach Points	Concentrated load	250, ultimate	200, limit	Any Direction
Handholds/ Handrails Attach Points	Concentrated load at any point on the Handhold/ Handrail	250, ultimate	(1) 200, M = 0 in–lb limit (2) 0, M = 600 in–lb limit	Any Direction
Foot Restraints/ Foot restraint	Concentrated load at the place surface	100, limit	N/A	Any Direction
	Moment	150 ft–lb, limit	N/A	Any Direction
Levers, Handles, Operating Wheels, Controls	Push or pull concentrated on most extreme edge	50, limit	(1) 45, limit (2) 35 in–lb, limit	Any Direction
Small Knobs	Torsion (twist)	11 ft–lb, limit	11 ft–lb, limit	Either Direction
Cabinets and any normally exposed equipment	Concentrated load applied by flat round surface with an area of 1 ft^2.	125, limit	125, limit	Any Direction
Inadvertent kick/bump	Quasi–static concentrated load on a 0.5 inch diameter circular area	125, limit	125, limit	Any Direction
Note: EVA loads apply only to external hardware.				

3.3.10 Computational resources design criteria.

Not applicable.

3.4 Documentation.

Documentation for the PCBM system will be developed and delivered as directed by the procuring activity.

3.5 Logistics.

3.5.1 Maintenance.

3.5.1.1 On–orbit maintenance.

The PCBM shall be maintained on–orbit utilizing corrective maintenance.

3.5.1.1.1 Corrective maintenance.

On–orbit PCBM corrective maintenance shall be performed by ORU removal and replacement.

3.5.1.1.2 In situ maintenance.

PCBM functionality shall be restored by in situ maintenance where applicable.

3.5.1.2 Access for on–orbit maintenance.

PCBM shall provide access to IVA locations requiring on–orbit maintenance as specified in SSP 50005, Tool access design requirements.

3.5.1.2.1 Visual access.

PCBM shall provide visual access to remove and replace PCBM ORUs in accordance with SSP 50005, Visual access design requirements.

3.5.1.2.2 Physical access.

Physical access shall be provided to perform ORU removal and replacement in accordance with SSP 50005, Physical accessability design requirements.

3.5.1.2.3 Removal, replacement, and modularity design.

PCBM equipment shall be in accordance with SSP 50005, Removal, replacement, and modularity design requirements, A, B, H, K, and L.

3.5.1.3 Standard on–orbit tools.

The PCBM ORUs shall be IVA removable and replaceable on–orbit utilizing the IVA standard tools listed in Table XXVII.

TABLE XXVII. Standard IVA Tool List With SNAP–ON Catalog Numbers

Open end/box (combination) wrench									
1/4”	5/16”	3/8”	7/16”	1/2”	9/16”	5/8”	3/4”	7/8”	1”
OEX8	OEX10A	OEX12A	OEX14A	OEX16A	OEX18A	OEX20A	OEX24A	OEX28A	OEX32A
Standard socket, 3/8” driver,12 point									
1/4”	5/16”	3/8”	7/16”	1/2”	9/16”	5/8”	3/4”	7/8”	1”
F081	F101	F121	F141	F161	F181	F201	F241	F281	F321
Handles			1/4” square driver ratchet, 4–7/16” long					TM70C	
Handles			3/8” square driver ratchet, 7–9/16” long					F720A	
Handles			Torque wrench 3/8” driver (30–200 in/lbs)					QJR217C	
Handles			3/8” breaker bar					F10L	
Handles			3/8” driver handle					F50A	
Handles			1/4” driver handle					TM4B	
Handles			3/8” rechargeable power driver					GFE future acquisition	
3/8” to 1/4” adaptor								TM01	
Extension, square driver, 4” long			1/4”					TMXK04	
Extension, square driver, 4” long			3/8”					FXK04	
Extension, square driver, 6” long			3/8”					FXK6	
Hex head socket driver, 1/4” driver									
1/8”		5/32”		3/16”		7/32”		1/4”	
TMA4		TMA5		TMA6		TMA7		TMA8	
Hex head socket driver, 3/8” driver									
5/16”		3/8”		7/16”		1/2”			
FA10B		FA12A		TBD		TBD			
Connector pliers						PWC 50			

NOTE:

(1) Displayed part numbers are from the Snap–On Catalog. The vendor part is modified for space application and the actual part number will change at the time of modification.

(2) The TBDs are not in the Snap–On Catalog. These items will be selected from another vendor or will be special ordered from Snap–On.

3.5.1.4 Standard on–orbit diagnostic equipment.

Not applicable.

3.5.1.5 Ground maintenance.

ORUs designated as repairable shall be designed for ground maintenance.

3.5.2 Supply.

3.5.2.1 Multiple launch.

ORUs shall withstand a minimum of 4 launch and 4 return cycles.

3.5.3 Facilities and facility equipment.

Not applicable.

3.6 Personnel and training.

3.6.1 Personnel.

Not applicable.

3.6.2 Training.

Not applicable.

3.7 Precedence.

In the event of conflict of requirements between this specification and other related program documents, the following order of precedence shall apply:

a. This specification (S683–28943)

b. Documents referenced in this specification and their references (any references in a reference that have additional references, are not applicable to this specification).

4 QUALITY ASSURANCE PROVISIONS

4.1 General.

Section 4 presents the verification process, verification requirements, the definition of applicable terminology attendant to the verification process, and constraints imposed on verification requirements.

The Contractor shall be responsible for determining the availability and scheduling of facilities for testing.

Qualification includes those activities which establish that the design and manufacturing processes will produce hardware and software that meets specification requirements in specified operational environments. Qualification activities are centered around verifying performance and design requirements invoked on component, subsystem, system, module, and element and its software. Compliance with performance, safety, interface, environmental, and maintainability requirements is included. Qualification tests generally consist of environmental and functional tests. Environmental tests include testing vibration/acoustics, temperatures, pressures, humidity, etc. Functional tests include testing performance such as flow, pressure, temperature, leakage, voltage, acoustic noise, etc.

4.1.1 Responsibility for verification.

Unless otherwise stated herein or in attendant contract documentation, the Contractor shall have full responsibility for the verifications specified herein. The verification process includes definition of detailed verification requirements, verification planning, conduct, assessment, and reporting. The Prime Contractor and NASA reserves the right to observe and support any verification defined herein.

4.1.2 Special tests and examinations.

Special tests and examinations shall be in accordance with SSP 41172.

4.2 Critical item quality conformance inspections.

The verification methods are inspection, analysis, demonstration, test, or a combination thereof. The allocation of these methods is based upon design analyses, design maturity, complexity of the item, criticality category and associated cost. Analysis and testing are the primary methods used to verify performance. Where critical systems are involved, or the risk of initial on–orbit failure is unacceptable, qualification tests will be used to verify performance.

4.2.1 Requirement/verification cross reference matrix.

A Requirement/verification cross reference matrix is provided in Table XXVIII. Each Section 3 and 5 design and preparation for delivery requirement shall be accounted for in the Requirement/verification cross reference matrix.

The methods column reflects the verification method(s) (defined in 4.2.1.1 through 4.2.1.4) as stated in the associated section 4 paragraph. The method of Not Applicable ”N/A” is used to denote a paragraph from Section 3 or 5 that does not contain a verifiable requirement or is a title paragraph.

A combination of methods may be applied to a single Section 3 or 5 paragraph to ensure its complete verification.

TABLE XXVIII. Requirement/Verification Cross Reference Matrix

Section 3			Section 4		
Paragraph Number	Paragraph Title	Position	Paragraph Number	Position	Verification Method(s)
3.2	Characteristics.	1	4.3.2	1	N/A
3.2.1	Performance requirements.	1	4.3.2.1	1	N/A
3.2.1.1	Element berthing.	1	4.3.2.1.1	1	N/A
3.2.1.1.1	Berthing visual cues system.	1	4.3.2.1.1.1	1	N/A
3.2.1.1.2	Element alignment.	1	4.3.2.1.1.2	1	N/A
3.2.1.1.2.1	Capture capability.	1	4.3.2.1.1.2.1	1	Analysis
3.2.1.1.2.2	Alignment capability.	1	4.3.2.1.1.2.2	1	Analysis
3.2.1.1.3	Capture loads.	1	4.3.2.1.1.3	1	Test | Analysis
3.2.1.2	Impact loads.	1	4.3.2.1.2	1	N/A
3.2.1.2.1	Berthing mechanism impact resistance.	1	4.3.2.1.2.1	1	Test | Analysis
3.2.1.3	Reserved.	1	4.3.2.1.3	1	N/A
3.2.1.4	Element rigidization.	1	4.3.2.1.4	1	N/A
3.2.1.4.1	Mechanism status while berthing.	1	4.3.2.1.4.1	1	N/A
3.2.1.4.2	Vestibule loads.	1	4.3.2.1.4.2	1	Test | Analysis | Demonstration
3.2.1.5	Pressurized vestibule leakage.	1	4.3.2.1.5	1	Test | Analysis
			4.3.2.1.5	2	Test | Analysis
3.2.1.6	Deberthing of pressurized elements.	1	4.3.2.1.6	1	Analysis
3.2.1.7	Reserved.	1	4.3.2.1.7	1	N/A
3.2.1.8	Life.	1	4.3.2.1.8	1	N/A
3.2.1.8.1	Service life.	1	4.3.2.1.8.1	1	Test | Analysis
3.2.1.8.1		2	4.3.2.1.8.1	1	Test | Analysis
3.2.1.8.2	Life cycle.	1	4.3.2.1.8.2	1	Test
3.2.1.8.3	Deberthing static life.	1	4.3.2.1.8.3	1	N/A
3.2.1.8.4	Launch cycles.	1	4.3.2.1.8.4	1	Analysis
3.2.1.8.5	De–orbit cycles.	1	4.3.2.1.8.5	1	Analysis
3.2.1.9	PCBM interface characteristics.	1	4.3.2.1.9	1	N/A
3.2.1.9.1	EVA interaction.	1	4.3.2.1.9.1	1	Test | Analysis
3.2.1.10	Atmospheric seal requirements.	1	4.3.2.1.10	1	N/A

Position = Order in which a title, paragraph, or listed item appears within a numbered paragraph.

A blank row in Section 3 aligned with a Section 4 Paragraph Numbers indicates that there are multiple Section 4 requirements for an individual Section 3 requirement.

N/A = Not Applicable

TABLE XXVIII. Requirement/Verification Cross Reference Matrix – Continued

Section 3			Section 4		
Paragraph Number	Paragraph Title	Position	Paragraph Number	Position	Verification Method(s)
3.2.1.10.1	Seal useful life.	1	4.3.2.1.10.1	1	Analysis
3.2.1.10.2	Verifiable seal leakage paths.	1	4.3.2.1.10.2	1	Inspection
3.2.1.10.3	Non–verifiable seal leakage paths.	1	4.3.2.1.10.3	1	Inspection
3.2.1.10.4	Seal deflections.	1	4.3.2.1.10.4	1	Test | Analysis
3.2.1.10.5	Pressure sealing.	1	4.3.2.1.10.5	1	Analysis
3.2.1.10.6	Seal contact.	1	4.3.2.1.10.6	1	Analysis
3.2.1.10.7	Replacement Seal functionality/leak paths.	1	4.3.2.1.10.7	1	Inspection
3.2.1.11	Reserved.	1	4.3.2.1.11	1	N/A
3.2.1.12	Air flow through PCBM.	1	4.3.2.1.12	1	N/A
3.2.1.12.1	Negative air flow.	1	4.3.2.1.12.1	1	Analysis
3.2.1.12.2	Positive air flow.	1	4.3.2.1.12.2	1	Analysis
3.2.1.13	Early/late access.	1	4.3.2.1.13	1	Analysis
3.2.1.14	Berthing temperature limits.	1	4.3.2.1.14	1	Test | Analysis
3.2.2	Physical characteristics.	1	4.3.2.2	1	N/A
3.2.2.1	PCBM/PE attachment interface.	1	4.3.2.2.1	1	Analysis
3.2.2.1.1	PCBM compatibility.	1	4.3.2.2.1.1	1	Analysis
3.2.2.2	Maximum component size.	1	4.3.2.2.2	1	N/A
3.2.2.3	Mass properties.	1	4.3.2.2.3	1	Test | Analysis
3.2.2.3		2	4.3.2.2.3	1	Test | Analysis
3.2.2.3.1	Geometric envelope.	1	4.3.2.2.3.1	1	Analysis
3.2.2.4	Preberthing visual access.	1	4.3.2.2.4	1	Analysis
3.2.2.5	Clear view volume for berthing target.	1	4.3.2.2.5	1	N/A
3.2.2.6	Passageway.	1	4.3.2.2.6	1	Analysis
3.2.2.7	Utility transfer cross–section.	1	4.3.2.2.7	1	Analysis
3.2.3	Reliability.	1	4.3.2.3	1	N/A
3.2.3.1	Operational lifetime.	1	4.3.2.3.1	1	Analysis
3.2.3.2	Failure Tolerance.	1	4.3.2.3.2	1	Analysis
3.2.3.2.1	Redundancy Status.	1	4.3.2.3.2.1	1	Analysis

Position = Order in which a title, paragraph, or listed item appears within a numbered paragraph.

A blank row in Section 3 aligned with a Section 4 Paragraph Numbers indicates that there are multiple Section 4 requirements for an individual Section 3 requirement.

N/A = Not Applicable

TABLE XXVIII. Requirement/Verification Cross Reference Matrix – Continued

Section 3			Section 4		
Paragraph Number	Paragraph Title	Position	Paragraph Number	Position	Verification Method(s)
3.2.3.2.2	Failure propagation.	1	4.3.2.3.2.2	1	Analysis
3.2.3.2.3	Separation of redundant paths.	1	4.3.2.3.2.3	1	Analysis
3.2.4	Maintainability.	1	4.3.2.4	1	N/A
3.2.4.1	General requirements.	1	4.3.2.4.1	1	N/A
3.2.4.1.1	Access item retention.	1	4.3.2.4.1.1	1	Inspection | Analysis
3.2.4.1.2	Installation/removal.	1	4.3.2.4.1.2	1	N/A
3.2.4.1.2.1	Incorrect equipment installation.	1	4.3.2.4.1.2.1	1	Inspection | Analysis
3.2.4.1.2.2	Lockwiring and staking.	1	4.3.2.4.1.2.2	1	Inspection | Analysis
3.2.4.2	Mean maintenance crew hours per year.	1	4.3.2.4.2	1	Analysis
3.2.4.3	Fault detection, isolation and recovery (FDIR).	1	4.3.2.4.3	1	N/A
3.2.4.3.1	Manual FDIR.	1	4.3.2.4.3.1	1	Analysis
3.2.5	Environmental conditions.	1	4.3.2.5	1	N/A
3.2.5.1	Temperature.	1	4.3.2.5.1	1	Analysis
3.2.5.2	Pressure.	1	4.3.2.5.2	1	Test
3.2.5.3	Humidity.	1	4.3.2.5.3	1	Analysis
3.2.5.3		2	4.3.2.5.3	2	Analysis
3.2.5.4	Vibration.	1	4.3.2.5.4	1	N/A
3.2.5.4		2	4.3.2.5.4	2	Analysis
3.2.5.4		3	4.3.2.5.4	3	Test
3.2.5.4		4	4.3.2.5.4	3	Test
3.2.5.4		5	4.3.2.5.4	3	Test
3.2.5.5	Acoustic.	1	4.3.2.5.5	1	N/A
3.2.5.5		2	4.3.2.5.5	2	Test | Analysis
3.2.5.5		3	4.3.2.5.5	2	Test | Analysis
3.2.5.5		4	4.3.2.5.5	2	Test | Analysis
3.2.5.5		5	4.3.2.5.5	2	Test | Analysis
3.2.5.6	Acceleration.	1	4.3.2.5.6	1	N/A
3.2.5.6		2	4.3.2.5.6	2	Analysis
3.2.5.6		3	4.3.2.5.6	2	Analysis
3.2.5.6		4	4.3.2.5.6	2	Analysis

Position = Order in which a title, paragraph, or listed item appears within a numbered paragraph.

A blank row in Section 3 aligned with a Section 4 Paragraph Numbers indicates that there are multiple Section 4 requirements for an individual Section 3 requirement.

N/A = Not Applicable

TABLE XXVIII. Requirement/Verification Cross Reference Matrix – Continued

Section 3			Section 4		
Paragraph Number	Paragraph Title	Position	Paragraph Number	Position	Verification Method(s)
3.2.5.6		5	4.3.2.5.6	2	Analysis
3.2.5.6		6	4.3.2.5.6	2	Analysis
3.2.5.6		7	4.3.2.5.6	2	Analysis
3.2.5.6		8	4.3.2.5.6	2	Analysis
3.2.5.6		9	4.3.2.5.6	2	Analysis
3.2.5.7	Ascent/descent pressurization	1	4.3.2.5.7	1	Analysis
3.2.5.7		2	4.3.2.5.7	1	Analysis
			4.3.2.5.7	2	Analysis
3.2.5.8	Plasma.	1	4.3.2.5.8	1	Inspection
3.2.5.9	Electromagnetic.	1	4.3.2.5.9	1	N/A
3.2.5.10	Airborne contaminants.	1	4.3.2.5.10	1	Analysis
3.2.5.10		2	4.3.2.5.10	1	Analysis
3.2.5.11	Airborne hydrocarbons.	1	4.3.2.5.11	1	Analysis
3.2.5.11		2	4.3.2.5.11	1	Analysis
3.2.5.11		3	4.3.2.5.11	2	Analysis
3.2.5.12	Atmospheric composition.	1	4.3.2.5.12	1	Analysis
3.2.5.12		2	4.3.2.5.12	1	Analysis
3.2.5.12		3	4.3.2.5.12	1	Analysis
3.2.5.13	Meteoroids and orbital debris (M/OD).	1	4.3.2.5.13	1	Analysis
3.2.5.14	Ionizing radiation.	1	4.3.2.5.14	1	N/A
3.2.5.14.1	Total dose ionizing radiation.	1	4.3.2.5.14.1	1	Analysis
3.2.5.15	Trapped particle fluxes for external materials.	1	4.3.2.5.15	1	Analysis
3.2.5.16	Electrostatic discharge.	1	4.3.2.5.16	1	N/A
3.2.5.17	Gravity.	1	4.3.2.5.17	1	Analysis
3.2.5.18	Atomic oxygen.	1	4.3.2.5.18	1	Analysis
3.2.5.19	Ultraviolet radiation flux for external materials.	1	4.3.2.5.19	1	Analysis
3.2.6	Transportability.	1	4.3.2.6	1	N/A
3.3	Design and construction.	1	4.3.3	1	Inspection
3.3		2	4.3.3	1	Inspection

Position = Order in which a title, paragraph, or listed item appears within a numbered paragraph.

A blank row in Section 3 aligned with a Section 4 Paragraph Numbers indicates that there are multiple Section 4 requirements for an individual Section 3 requirement.

N/A = Not Applicable

TABLE XXVIII. Requirement/Verification Cross Reference Matrix – Continued

Section 3			Section 4		
Paragraph Number	Paragraph Title	Position	Paragraph Number	Position	Verification Method(s)
3.3.1	Structures, materials, processes and parts.	1	4.3.3.1	1	N/A
3.3.1.1	Structures.	1	4.3.3.1.1	1	N/A
3.3.1.1.1	Safe life/fail–safe design.	1	4.3.3.1.1.1	1	Analysis
3.3.1.1.1		2	4.3.3.1.1.1	1	Analysis
3.3.1.1.2	Secondary structures.	1	4.3.3.1.1.2	1	Analysis
3.3.1.1.3	Margins for safety (MS)/factors of safety (FS).	1	4.3.3.1.1.3	1	Analysis
3.3.1.1.3		2	4.3.3.1.1.3	1	Analysis
3.3.1.1.4	Allowable mechanical properties.	1			
3.3.1.1.5	Fracture control.	1	4.3.3.1.1.5	1	Analysis
3.3.1.1.6	Fatigue.	1	4.3.3.1.1.6	1	Analysis
3.3.1.1.7	Creep.	1	4.3.3.1.1.7	1	Analysis
3.3.1.1.8	Stress analysis.	1	4.3.3.1.1.8	1	Analysis
3.3.1.1.8		2	4.3.3.1.1.8	1	Analysis
3.3.1.1.9	Pressure vessels.	1	4.3.3.1.1.9	1	Test
3.3.1.2	Materials and processes.	1	4.3.3.1.2	1	Inspection
3.3.1.2.1	Materials selection.	1	4.3.3.1.2.1	1	N/A
3.3.1.2.2	Metallic materials.	1	4.3.3.1.2.2	1	N/A
3.3.1.2.2.1	Stress corrosion.	1	4.3.3.1.2.2.1	1	N/A
3.3.1.2.2.2	Corrosion protection.	1	4.3.3.1.2.2.2	1	N/A
3.3.1.2.2.3	Liquid oxygen and gaseous oxygen (LOX/GOX) and propellant compatibility.	1	4.3.3.1.2.2.3	1	N/A
3.3.1.2.3	Nonmetallic materials.	1	4.3.3.1.2.3	1	N/A
3.3.1.2.3.1	Selection criteria.	1	4.3.3.1.2.3.1	1	N/A
3.3.1.2.3.2	Flammability, LOX/GOX, toxicity, odor and propellant compatibility.	1			N/A
3.3.1.2.3.3	Static age life.	1	4.3.3.1.2.3.3	1	N/A
3.3.1.2.3.4	Useful age life.	1	4.3.3.1.2.3.4	1	N/A
3.3.1.2.3.5	Thermal vacuum stability (outgassing).	1	4.3.3.1.2.3.5	1	N/A

Position = Order in which a title, paragraph, or listed item appears within a numbered paragraph.

A blank row in Section 3 aligned with a Section 4 Paragraph Numbers indicates that there are multiple Section 4 requirements for an individual Section 3 requirement.

N/A = Not Applicable

TABLE XXVIII. Requirement/Verification Cross Reference Matrix – Continued

Section 3			Section 4		
Paragraph Number	Paragraph Title	Position	Paragraph Number	Position	Verification Method(s)
3.3.1.2.3.6	Moisture and fungus resistance.	1	4.3.3.1.2.3.6	1	N/A
3.3.1.2.3.7	Lubricants.	1	4.3.3.1.2.3.7	1	N/A
3.3.1.3	Parts.	1	4.3.3.1.3	1	N/A
3.3.1.3.1	Fasteners.	1	4.3.3.1.3.1	1	N/A
3.3.1.3.1		3	4.3.3.1.3.1	3	Inspection
3.3.1.3.1		4	4.3.3.1.3.1	4	Inspection
3.3.1.3.1		5	4.3.3.1.3.1	5	Inspection
3.3.1.3.1		6	4.3.3.1.3.1	6	Inspection
3.3.1.3.1		7	4.3.3.1.3.1	7	Inspection
3.3.1.3.1		8	4.3.3.1.3.1	8	Inspection
3.3.1.3.1		11	4.3.3.1.3.1	11	Inspection
3.3.1.3.1		12	4.3.3.1.3.1	12	Inspection
3.3.1.3.1		14	4.3.3.1.3.1	14	Inspection
3.3.1.3.1		15	4.3.3.1.3.1	15	Inspection
3.3.1.3.2	Nonstandard fasteners.	1	4.3.3.1.3.2	1	Analysis
3.3.1.3.3	Bolts.	1	4.3.3.1.3.3	1	Analysis
3.3.2	Electromagnetic compatibility (EMC).	1	4.3.3.2	1	N/A
3.3.2.1	EMC requirements.	1	4.3.3.2.1	1	N/A
3.3.2.2	EMI requirements.	1	4.3.3.2.2	1	N/A
3.3.2.3	Electrical grounding.	1	4.3.3.2.3	1	N/A
3.3.2.4	Electrical bonding.	1	4.3.3.2.4	1	Inspection
3.3.3	Nameplates and product marking.	1	4.3.3.3	1	Analysis
3.3.3		2	4.3.3.3	2	Analysis
3.3.3		3	4.3.3.3	2	Analysis
3.3.3		4	4.3.3.3	3	Analysis
			4.3.3.3	4	Inspection
3.3.4	Workmanship.	1	4.3.3.4	1	Inspection
3.3.4.1	Cleanliness.	1	4.3.3.4.1		Inspection
3.3.5	Interchangeability.	1	4.3.3.5	1	N/A
3.3.6	Safety.	1	4.3.3.6	1	N/A
3.3.6.1	General.	1	4.3.3.6.1	1	N/A

Position = Order in which a title, paragraph, or listed item appears within a numbered paragraph.

A blank row in Section 3 aligned with a Section 4 Paragraph Numbers indicates that there are multiple Section 4 requirements for an individual Section 3 requirement.

N/A = Not Applicable

TABLE XXVIII. Requirement/Verification Cross Reference Matrix – Continued

Section 3			Section 4		
Paragraph Number	Paragraph Title	Position	Paragraph Number	Position	Verification Method(s)
3.3.6.1.1	Catastrophic hazards.	1	4.3.3.6.1.1	1	Analysis
3.3.6.1.2	Critical hazards.	1	4.3.3.6.1.2	1	Analysis
3.3.6.1.3	Design for minimum risk.	1	4.3.3.6.1.3	1	Analysis
3.3.6.2	Depressurization capability.	1	4.3.3.6.2	1	Analysis
3.3.6.3	Triple containment for hazardous materials and chemicals.	1	4.3.3.6.3	1	N/A
3.3.6.4	Hazardous accumulation of fluids.	1	4.3.3.6.4	1	N/A
3.3.6.5	Drains, vents, and exhaust ports.	1	4.3.3.6.5	1	N/A
3.3.6.6	Exposed surface temperatures.	1	4.3.3.6.6	1	Analysis
3.3.6.6		2	4.3.3.6.6	2	Analysis
3.3.6.6		3	4.3.3.6.6	3	Inspection
3.3.6.6		5	4.3.3.6.6	3	Inspection
3.3.6.6		5	4.3.3.6.6	3	Inspection
3.3.6.6		6	4.3.3.6.6	4	Analysis
3.3.6.7	Fire suppression.	1	4.3.3.6.7	1	Inspection
3.3.6.8	External corner and edge protection.	1	4.3.3.6.8	1	N/A
3.3.6.8.1	Sharp edges.	1	4.3.3.6.8.1	1	Inspection
3.3.6.8.2	Thin materials.	1	4.3.3.6.8.2	1	Analysis
3.3.6.8.3	Burrs.	1	4.3.3.6.8.3	1	Inspection
3.3.6.9	Equipment located inside habitable volumes.	1	4.3.3.6.9	1	Inspection
3.3.6.10	Safety critical fasteners.	1	4.3.3.6.10	1	Inspection
3.3.7	Human performance and human engineering.	1	4.3.3.7	1	Analysis
3.3.7		2	4.3.3.7	2	Inspection
3.3.7.1	Crew loads.	1	4.3.3.7.1	1	Analysis
			4.3.3.7.1	2	Analysis
3.3.7.2	Acoustic noise emissions on–orbit.	1	4.3.3.7.2	1	N/A

Position = Order in which a title, paragraph, or listed item appears within a numbered paragraph.

A blank row in Section 3 aligned with a Section 4 Paragraph Numbers indicates that there are multiple Section 4 requirements for an individual Section 3 requirement.

N/A = Not Applicable

TABLE XXVIII. Requirement/Verification Cross Reference Matrix – Continued

Section 3			Section 4		
Paragraph Number	Paragraph Title	Position	Paragraph Number	Position	Verification Method(s)
3.3.8	Flight operational software requirements.	1	4.3.3.8	1	N/A
3.3.9	Outfitting packages.	1	4.3.3.9	1	N/A
3.3.10	Computational resources design criteria.	1	4.3.3.10	1	N/A
3.4	Documentation.	1	4.3.4	1	N/A
3.5	Logistics.	1	4.3.5	1	N/A
3.5.1	Maintenance.	1	4.3.5.1	1	N/A
3.5.1.1	On–orbit maintenance.	1	4.3.5.1.1	1	Analysis
3.5.1.1.1	Corrective maintenance.	1	4.3.5.1.1.1	1	Analysis
3.5.1.1.2	In situ maintenance.	1	4.3.5.1.1.2	1	Analysis
3.5.1.2	Access for on–orbit maintenance.	1	4.3.5.1.2	1	Analysis
3.5.1.2.1	Visual access.	1	4.3.5.1.2.1	1	Analysis
3.5.1.2.2	Physical access.	1	4.3.5.1.2.2	1	Analysis
3.5.1.2.3	Removal, replacement, and modularity design.	1	4.3.5.1.2.3	1	Analysis
3.5.1.3	Standard on–orbit tools.	1	4.3.5.1.3	1	Analysis
3.5.1.4	Standard on–orbit diagnostic equipment.	1	4.3.5.1.4	1	N/A
3.5.1.5	Ground maintenance.	1	4.3.5.1.5	1	Analysis
3.5.2	Supply.	1	4.3.5.2	1	N/A
3.5.2.1	Multiple launch.	1	4.3.5.2.1	1	Analysis
3.5.3	Facilities and facility equipment.	1	4.3.5.3	1	N/A
3.6	Personnel and training.	1	4.3.6	1	N/A
3.6.1	Personnel.	1	4.3.6.1	1	N/A
3.6.2	Training.	1	4.3.6.2	1	N/A
3.7	Precedence.	1	4.3.7	1	N/A
5.0	PREPARATION FOR DELIVERY.	1	4.5	1	N/A

Position = Order in which a title, paragraph, or listed item appears within a numbered paragraph.
A blank row in Section 3 aligned with a Section 4 Paragraph Numbers indicates that there are multiple Section 4 requirements for an individual Section 3 requirement.
N/A = Not Applicable

4.2.1.1 Inspection.

Verification by visual examination of the item, or reviewing descriptive documentation, and comparing the appropriate characteristics with predetermined standards to determine conformance to requirements without the use of special laboratory equipment or procedures.

4.2.1.2 Analysis.

Verification by technical or mathematical models or simulation, algorithms, charts, or circuit diagrams, and representative data.

4.2.1.3 Demonstration.

Verification by operation, adjustment or reconfiguration of items performing their designed functions under specific scenarios. The items may be instrumented and quantitative limits or performance monitored, but only check sheets rather than actual performance data are required to be recorded.

4.2.1.4 Test.

Verification through systematic exercising of the item under all appropriate conditions. Performance is quantitatively measured either during or after the controlled application of either real or simulated functional or environmental stimuli.

The analysis of data derived from a test is an integral part of the test and may involve automated data reduction to produce the necessary results.

4.3 REQUIREMENTS

Contained herein are the verification requirements required to close out Section 3.2 and Section 5 design requirements.

4.3.1 Critical item definition.

Critical item definition (Section 3.0), including interface definitions (Section 3.1.4), are not verified in this section. Verification of these descriptions are covered in 4.3.2 of this specification as implemented through Section 3.2.

4.3.2 Characteristics.

4.3.2.1 Performance requirements.

4.3.2.1.1 Element berthing.

4.3.2.1.1.1 Berthing visual cues system.

Not applicable.

4.3.2.1.1.2 Element alignment.

Not applicable.

4.3.2.1.1.2.1 Capture capability.

Capture capability shall be verified by analysis under dynamic loads imposed by the SRMS. The analytical technique shall be validated by assembly–level test and demonstration that includes variation of performance resulting from temperature and pressure on the ACBM and PCBM and on their interfacing structures.

4.3.2.1.1.2.2 Alignment capability.

The capability of the PCBM to be berthed with an ACBM from an initial alignment specified shall be verified by PCBM level geometric analysis.

4.3.2.1.1.3 Capture loads.

Application and control of the specified forces and moments shall be verified by analysis under dynamic loads imposed by the SSRMS. The analytical technique shall be validated by assembly–level test that includes variation of performance resulting from temperature and pressure on the ACBM and PCBM and on their interfacing structures.

4.3.2.1.2 Impact loads.

4.3.2.1.2.1 Berthing mechanism impact resistance.

The PCBM resistance to damage by the specified impact loads shall be verified by analyses of component level static load test data.

4.3.2.1.3 Reserved.

4.3.2.1.4 Element rigidization.

4.3.2.1.4.1 Mechanism status while berthing.

Not applicable.

4.3.2.1.4.2 Vestibule loads.

Rigidization of the ACBM/PCBM interface shall be verified by analysis of the load–carrying capability and gapping of the mated vestibule and by sub–assembly test of capability to de–rigidize after imposition of peak loads. The analytical techniques shall be validated by element–level test and by assembly–level test and demonstration. Element level tests shall validate the techniques used to model pressure–induced deflection effects on the ACBM/PCBM joint. Assembly–level tests shall validate the modeling techniques used to assess the ACBM/PCBM joint's reaction to vestibule pressurization, including variation of performance resulting from per– and post–berth temperature and pressure on the ACBM and PCBM and their interfacing structures.

Assembly–level demonstration of mechanical functionality shall validate achievement of the preload values used in the analysis, and shall include variation of performance resulting from temperature and pressure on the ACBM and PCBM and their interfacing structure. The initial conditions of the demonstration shall be those resulting without interruption from accomplishment of ready–to–latch indication and capture.

4.3.2.1.5 Pressurized vestibule leakage.

PCBM leakage shall be verified by analysis, algebraically summing the leakage of the PCBM/PE joint and ACBM/PCBM joint. PCBM/PE leakage analysis shall be based on ACBM/PE testing. The analysis shall consider leak rate due to gapping of the joint and sensitivity of the joint's leak rate to temperature excursions.

ACBM/PCBM leakage analysis shall consider leak rate due to gapping of the joint, sensitivity to pre– and post–berth environments, and sensitivity to the dynamics of establishing the joint under service conditions. The gapping analytical technique shall be validated by test of a flight–like joint gapped to at least the value resulting from pressure–induced deflections at the worst–case ACBM/PCBM joint. Analytical techniques used to assess sensitivity to pre–berth temperatures of the ACBM and PCBM shall be validated by assembly–level test under (at least) flight–like ovality deflections with (at least) flight–like seal contact stresses and temperatures during and after rigidization of the ACBM/PCBM interface. The post berth temperature sensitivity analytical technique shall be validated by test of a flight–like joint mated under the test conditions specified above, and subsequently tested under pressurized conditions at ambient, maximum and minimum post–berth temperatures with worst–case flight–like gaps.

Replacement seal leakage shall be verified by analysis of leak rate due to gapping/mismatching and sensitivity of the joint's leak rate to temperature excursions for both the PCBM to PE and CBM to CBM seals. The gapping/mismatch analytical technique shall be validated by testing of the PCBM/PE replacement seal to at least maximum manufacturing flange mismatch. The gapping/mismatch analytical technique shall be validated by testing of the CBM to CBM

replacement seal on a CBM to CBM interface which was mated with at least maximum preberth mismatch due to temperature and ovalities.

4.3.2.1.6 Deberthing of pressurized elements.

Deberthing of the PCBM from the ACBM shall be verified by analysis of PCBM thermal stand–off loads, maximum seal stiction loads, and maximum RMS resistance.

4.3.2.1.7 Reserved.

4.3.2.1.8 Life.

4.3.2.1.8.1 Service Life.

Analysis shall be conducted at the PCBM assembly level to verify that the PCBM is capable of the specified number of berthing cycles with component replacement. This analysis will be based upon component and assembly level life cycle testing. Maintenance of replaceable items is permitted after completion of the 12 th complete cycle.

4.3.2.1.8.2 Life cycle.

A test shall be conducted to verify that the PCBM shall be capable of berthing and deberthing a minimum of 6 times without maintenance under simulated on–orbit environmental conditions.

4.3.2.1.8.3 Deberthing static life.

Deleted.

4.3.2.1.8.4 Launch cycles.

Analysis shall be conducted at the PCBM assembly level to verify that the PCBM is capable of sustaining the specified number of launch cycles.

4.3.2.1.8.5 De–orbit cycles.

Analysis shall be conducted at the PCBM assembly level to verify that the PCBM is structurally capable of surviving the specified number of de–orbit cycles.

4.3.2.1.9 PCBM interface characteristics.

4.3.2.1.9.1 EVA interaction.

An analysis shall be conducted to verify that the PCBM shall not require on–orbit EVA preparation for berthing or deberthing the pressurized logistics module. The analysis shall be based on assembly level qualification berthing and deberthing test data and analysis.

4.3.2.1.10 Atmospheric Seal Requirements.

4.3.2.1.10.1 Seal useful life.

The ability of seals to provide independent sealing capability for a minimum of 10 years or be on–orbit maintainable, with 5 year storage period shall be verified by analysis based on material properties.

4.3.2.1.10.2 Verifiable seal leakage paths.

An inspection of drawings shall be conducted to verify that leak paths which can be verified prior to launch have two seal beads exclusive of leak check ports.

4.3.2.1.10.3 Non–verifiable seal leakage paths.

An inspection of drawings shall verify that the seals between the common berthing mechanism halves which cannot be verified prior to launch have three seal beads exclusive of leak check ports.

4.3.2.1.10.4 Seal deflections.

The ability of seals to accommodate structural deflections which occur during launch, ascent, and on–orbit shall be verified by analysis based on component level and assembly level tests.

4.3.2.1.10.5 Pressure sealing.

The ability of seals to provide adequate sealing without atmospheric pressure assistance applied shall be verified by analysis.

4.3.2.1.10.6 Seal contact.

Qualification analysis shall be conducted to verify that the seals maintain contact with the sealing surfaces with a positive margin.

4.3.2.1.10.7 Replacement Seal functionality/leak paths.

An inspection of drawings shall be conducted to verify that replacement seal provides not less than n–1 beads, where n = number of primary beads. Seal bead around the Powered Bolt hole can be counted as 1 seal bead for the replacement seal.

4.3.2.1.11 Reserved.

4.3.2.1.12 Air flow through PCBM.

4.3.2.1.12.1 Negative air flow.

Analysis shall be conducted to verify the specified air flow rate requirements.

4.3.2.1.12.2 Positive air flow.

Analysis shall be conducted to verify the specified air flow rate requirements.

4.3.2.1.13 Early/late access.

An analysis shall be conducted to verify that the PCBM shall not preclude early/late access to the logistics module during ground activities.

4.3.2.1.14 Berthing temperature limits.

An analysis based on test data shall be conducted to verify that the PCBM shall be capable of being captured, acquired, and rigidized within the thermal limits defined in Figure 6, given restrictions as applicable to the Type II PCBM.

4.3.2.2 Physical characteristics.

4.3.2.2.1 PCBM/PE attachment interface.

PCBM interface with the pressurized elements shall be verified by analysis.

4.3.2.2.1.1 PCBM compatibility.

Verify by analysis at the PCBM level that any PCBM will be capable of mating with any ACBM.

4.3.2.2.2 Maximum component size.

Not applicable.

4.3.2.2.3 Mass properties.

An analysis shall be conducted to verify that the PCBM mass shall not be greater than 440 pounds. This analysis shall be based on component test data and/or assembly level test data. Center of mass requirements of Figure 7 shall be verified by analysis and/or test based on component and assembly test data.

4.3.2.2.3.1 Geometric envelope.

The PCBM geometric envelope shall be verified by analysis.

4.3.2.2.4 Preberthing visual access.

Visual access provided by the PCBM for preberthing survey shall be verified by analysis of PCBM drawings.

4.3.2.2.5 Clear view volume for berthing target.

Not applicable.

4.3.2.2.6 Passageway.

The required pressurized passageway through the PCBM shall be verified by analysis.

4.3.2.2.7 Utility transfer cross–section.

Provision of the required envelopes shall be verified by analysis.

4.3.2.3 Reliability.

Not applicable.

4.3.2.3.1 Operational lifetime.

An analysis shall be performed using data obtained from drawings and design documentation to verify that the PCBM is capable of remaining operational for 10 years through a combination of

periodic inspections, preventive and corrective maintenance, restoration, replacement of components, and resupply operations.

4.3.2.3.2 Failure Tolerance.

The PCBM failure tolerance shall be verified by a Failure Modes and Effects Analysis. The FMEA shall be conducted in accordance with SSP 30234. For each function identified with failure tolerance required to be greater than zero, the FMEA shall identify each hardware item(s) performing the function. The FMEA shall be performed to determine the credible failure modes of the hardware and the associated effects of the failure. The requirement will be satisfied when the results of the associated FMEA shows that for functions identified with failure tolerance required to be greater than zero, the PCBM can withstand the identified number of failures without loss of the applicable functions. For those functions required to be zero fault tolerant only, verification of applicable section 3.2.1 requirement(s) will be adequate to show compliance.

4.3.2.3.2.1 Redundancy Status.

The redundancy status requirement shall be verified by analysis. For each function required to be greater than zero fault tolerant, the analysis shall identify hardware in each redundant path and the redundancy configuration (active or standby). For any instances of stand by redundancy, the analysis shall then define the method of determining operational status of the standby hardware. The requirement will be satisfied when the analysis results show that the operational status of standby redundant hardware items can be determined without requiring removal of ORUs.

4.3.2.3.2.2 Failure propagations.

Failure propagation shall be verified by Failure Mode and Effects Analysis. The FMEA shall be conducted in accordance with SSP 30234. The FMEA shall be conducted on each identified ORU in the PCBM. The requirement will be satisfied when the FMEA results show that each credible failure identified for each ORU dose not result in a failure external to the ORU.

4.3.2.3.2.3 Separation of redundant paths.

The separation of redundant paths requirement shall be verified by analysis. An analysis shall be performed considering the location of redundant PCBM hardware and element packaging details to assess the ability of the PCBM to survive single credible events. For each PCBM function required to be failure tolerant, the analysis shall identify the hardware required to provide the function, describe the hardware redundancy configuration and packaging details, and assess the susceptibility of the redundant functional paths to loss from a single event.

4.3.2.4 Maintainability.

4.3.2.4.1 General requirements.

Not applicable.

4.3.2.4.1.1 Access item retention.

Access item retention shall be verified by analysis and inspection. The analysis shall identify all covers, caps, and structural parts required to be removed to gain access to ORUs for planned

maintenance tasks. The analysis shall identify the retention method to be used. The hardware installation drawings shall be inspected to ensure that hardware interfaces are provided when required.

4.3.2.4.1.2 Installation/removal.

4.3.2.4.1.2.1 Incorrect equipment installation.

Incorrect equipment installation shall be verified by analysis and inspection. The analysis shall identify each ORU contained in the PCBM. An inspection of the ORU installation drawings shall be conducted to ensure each ORU contains physical provisions (e.g. guides, location pins, orientation marks, etc.) that reduce the likelihood of an incorrect installation.

4.3.2.4.1.2.2 Lockwiring and staking.

Lockwiring and staking shall be verified by analysis and inspection. The analysis shall identify each ORU that requires planned maintenance. An inspection of drawings shall be performed to verify that no lockwire or staking is used for maintenance installations or operational interfaces.

4.3.2.4.2 Mean maintenance crew hours per year.

Mean maintenance crew hour allocations shall be verified by analysis. The analysis shall identify each ORU that will require maintenance. The MMCH/Y shall be calculated for each of the ORUs. The individual MMCH/Ys shall then be totaled and added to parametric estimates of the non–ORU MMCH/Y. The requirement will be satisfied when data shows that MMCH/Y predictions do not exceed the respective allocations.

4.3.2.4.3 Fault detection, isolation and recovery (FDIR).

Not applicable.

4.3.2.4.3.1 Manual FDIR.

An analysis shall be conducted based on the Hazard Analysis Reports, Reliability Block Diagrams Analysis, FMEA, and Logistics Support Analysis Report to verify that the requirements of 3.2.4.3.1 are met.

4.3.2.5 Environmental conditions.

4.3.2.5.1 Temperature.

An analysis shall be conducted to verify that the materials used in the PCBM do not degrade after exposure to the temperature limits defined in Tables VI and VII. Verification of performance requirements is covered under 3.2.1.14 Operating Temperatures Limits.

4.3.2.5.2 Pressure.

The PCBM shall be subjected to thermal vacuum tests in accordance with SSP 41172, Section 4.2.2, Thermal vacuum tests, component qualification, to verify that the PCBM meets specified

performance requirements during and after exposure to the pressure environments defined in Table VIII.

4.3.2.5.3 Humidity.

a. An analysis shall be conducted to verify that the PCBM meets specified performance requirements after exposure to humidity levels of 0 to 100%.

b. An analysis shall be conducted to verify that the PCBM meets specified performance requirements when exposed to humidity levels of 0 to 75%.

4.3.2.5.4 Vibration.

Verification of lead–in statement is not required.

a. An analysis shall be performed based on the testing performed under ”b” to verify that the vibration requirements of Table IX are acceptable.

b–d. Testing shall be performed to verify that the PCBM Assembly is capable of with standing the Ascent vibration loads defined in Table X.

4.3.2.5.5 Acoustics.

Verification of lead–in statement is not required.

a–d. An analysis shall be conducted to verify that the PCBM can sustain transportation, ascent, decent, and ferry flight acoustic levels based on component level tests.

4.3.2.5.6 Acceleration.

Verification of lead–in statement is not required.

a–g. Qualification analysis shall be performed to verify the PCBM will withstand transportation, storage, pre–launch, NSTS flight Space Station on–orbit, descent and ferry accelerations and loads without degradation of performance. This analysis shall be based on the qualification analysis and testing of subsystems and components within it, as well as analysis of the rigidized ACBM–to–PCBM interface.

4.3.2.5.7 Ascent/descent pressurization.

a. Depressurization. An analysis shall be conducted to verify that the PCBM to PE interface shall survive a 0.76 psi/sec depressurization rate over the range of 15.2 psia to 5.5E–12 psia without loss of functionality as specified herein.

b. Repressurization. The PCBM to PE interface shall survive a 0.30 psi/sec repressurization rate over the range of 5.5E–12 psia (2.7E–10 Torr) to 15.2 psia without loss of functionality as specified herein.

4.3.2.5.8 Plasma.

An inspection of drawings shall be performed to assure that the materials and parts have a breakdown voltage in access of 40 volts.

4.3.2.5.9 Electromagnetic.

Not applicable.

4.3.2.5.10 Airborne contaminants.

An analysis shall be performed at the PCBM component level to compare the design of the PCBM components to other similar components that have performed in an equivalent or less clean environment to assure that the system performance will not be degraded by exposure to the contamination environment defined herein.

4.3.2.5.11 Airborne hydrocarbons.

An analysis shall be performed comparing the design of the PCBM to other similar systems that have performed in an equivalent or less clean environment to assure that the system performance will not be degraded by exposure to the contamination environment defined herein.

An analysis shall be conducted to verify that the PCBM shall be capable of surviving the Return–to–Earth airborne hydrocarbon environments specified in Table XVIII.

4.3.2.5.12 Atmospheric composition.

An analysis shall be performed comparing the design of the PCBM to other similar systems that have performed in an equivalent environment to assure that the system performance will not be degraded by exposure to the airborne composition defined herein.

4.3.2.5.13 Meteoroids and orbital debris (M/OD).

An analysis shall be performed at the element level to verify that the PCBM shall support Space Station survivability requirements when exposed to the life cycle phase meteoroid and orbital debris environments.

4.3.2.5.14 Ionizing radiation.

Not applicable.

4.3.2.5.14.1 Total dose ionizing radiation.

An analysis shall be performed using the operational lifetime of PCBM equipment, parts radiation data, and data from parts testing and design of PCBM equipment to determine materials and parts susceptibility limits and design hardness required to withstand total dose ionizing radiation requirement defined herein. Review of drawings and parts lists shall be performed to assure that the materials, parts and design hardness requirements defined by the analysis are satisfied.

4.3.2.5.15 Trapped particle fluxes for external materials.

An analysis shall be performed using the operational lifetime, data from tests or existing literature from similar applications, and design of external PCBM equipment to assure that the materials and design will meet the system life and performance requirements when exposed to the external trapped particle flux (electrons and protons) environment defined herein.

4.3.2.5.16 Electrostatic discharge.

Not applicable.

4.3.2.5.17 Gravity.

An analysis shall be performed using drawings, parts data and materials data to verify the operational capability of the PCBM in the gravity environments defined herein.

4.3.2.5.18 Atomic oxygen.

An analysis shall be performed using the operational lifetime, data from tests or existing literature from similar applications, and design of external PCBM equipment to assure that the materials and design will meet the system life and performance requirements when exposed to the atomic oxygen environment defined herein.

4.3.2.5.19 Ultraviolet radiation flux for external materials.

An analysis shall be performed using the operational lifetime, data from tests or existing literature from similar applications, and design of element external PCBM equipment to assure that the materials and design will meet the system life and performance requirements when exposed to the ultraviolet radiation flux environment defined herein.

4.3.2.6 Transportability.

Verification of environmental constraints are covered under verification activities defined in 4.3.2.5.

4.3.3 Design and construction.

An inspection of specifications and applied standards compared against MIL–STD–970 and MM 8070.2 shall verify that specified design and construction requirements have been satisfied.

4.3.3.1 Structures, materials, processes, and parts.

4.3.3.1.1 Structures.

4.3.3.1.1.1 Safe life/fail–safe design.

A fatigue and fracture analysis shall be performed, using data obtained from safety documentation, drawings, material specifications, and tests, to verify that the specified safe life and fail–safe design requirements have been satisfied.

4.3.3.1.1.2 Secondary structures.

A stress analysis shall be conducted to verify that the requirements of SSP 30559 have been satisfied. A fatigue and fracture analysis shall be conducted to verify that the PCBM shall have an on–orbit structural life of 15 years.

4.3.3.1.1.3 Margins for safety (MS)/factors of safety (FS).

A stress, fatigue, and fracture analysis shall be performed using data obtained from drawings, material specifications, and tests to verify that the specified margins of safety, factors of safety, and proof pressure requirements have been satisfied.

4.3.3.1.1.4 Allowable mechanical properties.

Deleted.

4.3.3.1.1.5 Fracture control.

A fracture analysis shall be performed on the PCBM structural components to verify that the PCBM meets the fracture requirements.

4.3.3.1.1.6 Fatigue.

A fracture analysis shall be performed on the PCBM structural components to verify that the PCBM meets the fatigue requirements. The analysis shall include, but not necessarily be limited to, consideration of the following factors: combined effects of cyclic loading and temperature effects; and a minimum number of mission cycles that is four times the total number of cycles planned.

4.3.3.1.1.7 Creep.

A structural analysis shall be performed on PCBM structural components to assure that excessive creep strain is precluded during PCBM structural service life. The review shall include, but not necessarily be limited to, consideration of the following factors: rupture, detrimental deformation, and buckling of compression members.

4.3.3.1.1.8 Stress analysis.

A stress analysis shall be performed using data obtained from drawings, material specifications, and engineering tests to verify that the PCBM has a positive margin of safety against yielding at yield load and a positive margin of safety against failure at ultimate load.

4.3.3.1.1.9 Pressure vessels.

Pressure testing shall be conducted in accordance with SSP 41172, Section 4 and to the levels and duration specified therein.

4.3.3.1.2 Materials and processes.

An inspection of materials and processes used in the PCBM compared against SSP 30233 and SSP 30246 shall verify that the specified materials and processes requirements have been satisfied.

4.3.3.1.2.1 Materials selection list.

Deleted.

4.3.3.1.2.2 Metallic materials.

4.3.3.1.2.2.1 Stress corrosion.

Deleted.

4.3.3.1.2.2.2 Corrosion protection.

Deleted.

4.3.3.1.2.2.3 Flammability, LOX/GOX, and propellant compatibility.

Deleted.

4.3.3.1.2.3 Nonmetallic metals.

4.3.3.1.2.3.1 Selection criteria.

Deleted.

4.3.3.1.2.3.2 Flammability, LOX/GOX, toxicity, odor, and propellant compatibility.

Deleted.

4.3.3.1.2.3.3 Static age life.

Deleted.

4.3.3.1.2.3.4 Useful age life.

Deleted.

4.3.3.1.2.3.5 Thermal vacuum stability (outgassing).

Deleted.

4.3.3.1.2.3.6 Moisture and fungus resistance.

Deleted.

4.3.3.1.2.3.7 Lubricants.

Deleted.

4.3.3.1.3 Parts.

4.3.3.1.3.1 Fasteners.

Verification of lead–in statement is not required.

a. An inspection of drawings shall be performed to verify that fasteners, including nuts, washers, and screws used in attaching equipment and access covers that may require removal on–orbit are captive.

Verify by inspection that any other item such as caps and other structural parts that may be removed on–orbit for maintenance or other planned activities, are provided a means for retention in a safe position accessible for replacement.

b. Verify by inspection of drawings that fastener knobs are designed to prevent slipping in the crewperson's hand.

c. Verify by inspection of drawings that quick opening fasteners require a maximum of one complete turn to operate.

d. An inspection of drawings shall be performed to verify that external hex, internal hex, or double–hex fastener heads are used. Internal wrenching fasteners are Allen–head type. An inspection of drawings shall be performed to verify that Allen–head type shall be used only where a smooth surface is required.

e. Verify by inspection of drawings that no straight slot nor Phillips type internal grip fasteners are used.

f. An inspection of drawings shall be conducted of the PCBM Installation fasteners to verify that the fastener are locked with positive locking devices.

g. An inspection of drawings shall be conducted to verify that moving surfaces are free of locking compounds.

h. An inspection of drawings shall be conducted to verify that PCBM Installation fasteners in aluminum, magnesium and plastic use threaded inserts.

i. An inspection of drawings shall be conducted on the PCBM fittings and mounting plates with oversized or slotted holes to verify that friction is not utilized to prevent movement of the faying surfaces.

4.3.3.1.3.2 Nonstandard fasteners.

An analysis shall be performed to verify non–standard fasteners are in accordance with SSP 30559, Section 3.8.

4.3.3.1.3.3 Bolts.

An analysis of the PCBM structural design shall be performed to verify that the design is in conformance with the specified requirements for all structural components. When it is shown that PCBM structural components have been designed in conformance with the requirements as specified in SSP 30559, Preloaded Joint Criteria, then the verification shall be satisfied.

4.3.3.2 Electromagnetic compatibility (EMC).

4.3.3.2.1 EMC requirements.

Not applicable.

4.3.3.2.2 EMI requirements.

Not applicable.

4.3.3.2.3 Electrical grounding.

Not applicable.

4.3.3.2.4 Electrical bonding.

An inspection of drawings shall be performed to verify that the specified electrical bonding requirements of SSP 30245 have been satisfied.

4.3.3.2.5 Cable and wire design and control.

Not applicable.

4.3.3.2.6 Electrostatic discharge (ESD).

Not applicable.

4.3.3.2.7 Corona.

Not applicable.

4.3.3.3 Nameplates and product marking.

An analysis shall be performed to verify that markings are in accordance with MIL–STD–130 except 4.1.c, and SSP 50005, paragraph 9.5.3.1.

An analysis of markings techniques shall verify that the markings will be legible throughout the useful life of the PCBM.

An analysis shall also verify that the marking techniques do not degrade the structural integrity of the PCBM.

Inspection of drawings on subsystem spares shall verify that provisions have been made for application of automated indentification labels.

4.3.3.4 Workmanship.

An inspection shall verify that the workmanship is in accordance with SSP 30233.

4.3.3.4.1 Cleanliness.

An inspection of the drawings shall verify that the PCBM interior surfaces are in accordance with Visible Clean–Sensitive (VC–S) cleanliness requirements of SN–C–0005.

4.3.3.5 Interchangeability.

Not applicable.

4.3.3.6 Safety.

4.3.3.6.1 General.

Not applicable.

4.3.3.6.1.1 Catastrophic hazards.

An analysis shall be conducted to verify that no combination of 2 failures, 2 operator errors or 1 each in the PCBM shall result in a disabling or fatal personnel injury, or loss of 1 of the Orbiter, ISS, or major ground facility.

4.3.3.6.1.2 Critical hazards.

An analysis shall be conducted to verify that no PCBM single failures or single operator errors shall result in a nondisabling personnel injury, severe occupational illness; loss of an ISS on–orbit life sustaining function or emergency system, or damage to the Orbiter or ground facility.

4.3.3.6.1.3 Design for minimum risk.

A hazard analysis shall be conducted using data from drawings and design margins or factors of safety qualification to verify that hazards are controlled by safety related properties and characteristics of PCBM primary structure design.

4.3.3.6.2 Depressurization capability.

An analysis shall be conducted using data from drawings, hazard analyses, and component environmental qualification to verify that PCBM or equipment located in SS pressurized volumes tolerate depressurization and repressurization without resulting in a hazard or failure propagation.

4.3.3.6.3 Triple containment for hazardous materials.

Not applicable.

4.3.3.6.4 Hazardous accumulation of fluids.

Not applicable.

4.3.3.6.5 Drains, vents, and exhaust ports.

Not applicable.

4.3.3.6.6 Exposed surface temperatures.

a. An analysis shall be performed using a thermal model based on the PCBM physical configuration and the environmental data to verify that under normal on–orbit operations the surface temperatures of the PCBM shall be between 39 degrees F and 113 degrees F.

The above analysis shall also verify that surfaces which may be, under normal on–orbit operations, subjected to incidental contact with bare skin do not exceed 122 degrees F.

b –d. An inspection of drawings shall be performed to verify that protective equipment and warning labels are provided for contact with surfaces, which cannot be protected from exceeding 122 degrees F.

e. An analysis shall be performed to verify that during EVA operations when the PCBM is subjected to the external environment, the surface temperatures are maintained between –180 degrees F and + 235 degrees F.

4.3.3.6.7 Fire suppression.

An inspection of the materials used shall verify that materials are non–combustible or self–extinguishing.

4.3.3.6.8 External corner and edge protection.

4.3.3.6.8.1 Sharp edges.

An inspection of drawings shall be conducted to verify that the PCBM shall protect EVA Crew from injury due to sharp edges by the use of corner and edge guards or by rounding the corners and edges in accordance with NSTS 07700, Volume XIV, Appendix 7, paragraph 2.3, Crew and equipment safety, and Tables II.2–IIa and II.2–IIb.

4.3.3.6.8.2 Thin materials.

An analysis shall be conducted to verify that materials less than 0.08 inch thick, with exposed edges that are uniformly spaced, not to exceed 0.5 inch gaps, flush at the exposed surface plane and shielded from direct EVA interaction, shall have edge radii greater than 0.003 inches.

4.3.3.6.8.3 Burrs.

An inspection shall be conducted to verify that exposed surfaces shall be smooth and free of burrs.

4.3.3.6.9 Equipment located inside habitable volumes.

An inspection of drawings shall be conducted to verify that round or slotted holes that are uncovered shall be less than 0.4 inches or greater than 1.0 inches in diameter for equipment located inside habitable volumes.

4.3.3.6.10 Safety critical fasteners.

An inspection of drawings shall be conducted to verify that safety critical fasteners have provisions to prevent inadvertent back out.

4.3.3.7 Human performance/human engineering.

An analysis shall be performed by comparing data obtained from drawings and human engineering documentation to SSP 50005 to verify that human engineering design factors were incorporated in the PCBM design.

The inspection shall verify that English units of measure were used in drawings, documentation, operating procedures, and maintenance manuals.

4.3.3.7.1 Crew loads.

An analysis shall be performed using the PCBM drawings to determine the structural sizes and materials of the applicable crew system on structure.

Based on this data a structural analysis shall be performed to verify that the PCBM selected crew system or structure will survive the induced crew loads of Table XXVI.

4.3.3.7.2 Acoustic noise emissions on–orbit.

Not applicable.

4.3.3.8 Flight operational software requirements.

Not applicable.

4.3.3.9 Outfitting packages.

Not applicable.

4.3.3.10 Computational resources design criteria.

Not applicable.

4.3.4 Documentation.

No verification required.

4.3.5 Logistics.

No verification required.

4.3.5.1 Maintenance.

No verification required.

4.3.5.1.1 On–orbit maintenance.

An analysis shall be conducted using the FMEA, ORU selection rationale, and preventative maintenance analysis to verify that the PCBM shall be capable of being maintained on–orbit.

4.3.5.1.1.1 Corrective maintenance.

An analysis shall be conducted to verify that on–orbit maintenance items are identified as ORUs and are capable of being removed and replaced on–orbit.

4.3.5.1.1.2 In situ maintenance.

An analysis shall be conducted to verify that PCBM functionality shall be restored by in situ maintenance where applicable.

4.3.5.1.2 Access for on–orbit maintenance.

An analysis shall be conducted to verify that tool access to IVA locations requiring on–orbit ORUs removal and replacement is in accordance with SSP 50005, Tool access design requirements.

4.3.5.1.2.1 Visual access.

An analysis shall be conducted to verify that visual access to remove and replace PCBM ORUs in accordance with SSP 50005, Visual access design requirements has been provided.

4.3.5.1.2.2 Physical access.

An analysis shall be conducted to verify that physical access shall be provided to perform ORU removal and replacement in accordance with SSP 50005, Physical accessability design requirements.

4.3.5.1.2.3 Removal, replacement, and modularity design.

An analysis shall be conducted to verify that PCBM equipment shall be in accordance with SSP 50005, Removal, replacement, and modularity design requirements, A, B, H, K, and L.

4.3.5.1.3 Standard on–orbit tools.

An analysis shall be conducted to verify that the PCBM ORUs shall be IVA removable and replaceable on–orbit utilizing the IVA standard tools listed in Table XXVII.

4.3.5.1.4 Standard on–orbit diagnostic equipment.

Not Applicable.

4.3.5.1.5 Ground maintenance.

An analysis shall be conducted to verify that ORUs designated as repairable shall be designed for ground maintenance.

4.3.5.2 Supply.

4.3.5.2.1 Multiple launch.

A fatigue damage analysis based on qualification vibration test data shall be conducted to verify that ORUs shall be capable of withstanding a minimum 4 launch and 4 return cycles.

4.3.5.3 Facilities and facility equipment.

Not applicable.

4.3.6 Personnel and training.

4.3.6.1 Personnel.

Not applicable.

4.3.6.2 Training.

Not applicable.

4.3.7 Precedence.

No verification required.

4.4 Reserved.

4.5 PREPARATION FOR DELIVERY.

Not Applicable

5.0 PREPARATION FOR DELIVERY.

Not Applicable.

6. NOTES.

6.1 Definitions.

6.1.1 Reserved.

6.1.2 Allowable load.

The maximum load (or combination of loads) an unflawed structure is capable of withstanding without incurring detrimental deformation of rupture/collapse. The loads in these cases are allowable yield load and allowable ultimate (or buckling) load, respectively.

6.1.3 Allowable yield load.

The maximum load which the structure can withstand without yielding.

6.1.4 Berth.

Berth is defined as the point at which a mechanical connection has been established between two elements, but prior to establishment of a structural connection capable of reacting loads. The operation that achieves this condition is called ”berthing”.

6.1.5 Reserved.

6.1.6 Reserved.

6.1.7 Component.

A combination of parts, devices and structures, usually self–contained, which perform a distinctive function in the operation of the overall equipment. A ”black box” (e.g., transmitter, encoder, cryogenic pump, star tracker).

6.1.8 Condition monitored item.

The repair or replacement of an item with an identical item on a schedule determined by the continuous analysis of operational performance data.

6.1.9 Corrosion.

Corrosion is the removal of surface material by chemical action, or by a combination of chemical action and relative motion. The rate of wear may be increased by increasing the load. Of primary concern in space vehicle corrosion are (1) the inadvertent application of some corrosive substance within a bearing, housing, or reservoir; (2) unnoticed corrosion that occurs prior to launch, usually during storage or shipment; and (3) fretting corrosion, resulting from low–amplitude oscillation in the presence of oxygen. The iron oxide formed from the presence of oxygen subsequently causes abrasive wear.

6.1.10 Development spares.

Those spares that must be identified and acquired to support production, assembly, and verification.

6.1.11 Detection.

Discovery of the existence of a fault.

6.1.12 Element.

Single element, includes installed element subsystem and assemblies.

6.1.13 Exposed structural edges and corners.

Exposed edges and corners are those which present a hazard to crew or groundcrew after the components have been assembled and installed. In general, they extend into a crew translation path or maintenance access corridor.

6.1.14 Factor of safety.

Multiplicative constants applied to limit loads to obtain the required minimum design ultimate (or yield) load.

6.1.15 Failure.

The inability of a system, subsystem, component, or part to perform within specified limits under specified conditions given specified inputs for a specified duration.

6.1.16 Failure propagation.

A situation where a failure, whether of a part, component, subsystem, or system, causes damage to other hardware. This is not to be confused with a propagated effect where other equipment is not damaged but becomes non–functional, e.g., due to a loss of input.

6.1.17 Failure tolerance.

The capability of a system to perform its function(s) in the presence of failures within its hardware and/or software.

6.1.18 Fail–safe.

A design category in which the structure has sufficient redundancy so that the failure of one structural element does not cause general failure of the entire structure. For life critical systems, fail–safe means that the system(s) has sufficient redundancy. Additionally, the failure of system or component does not cause a hazardous condition for the space station or crew.

6.1.19 Fault.

A fault is a degradation to a condition outside of specified functional performance limits.

6.1.20 Reserved.

6.1.21 Fretting.

Also known as ”fretting corrosion”, this is the oxidation of finely divided wear particles, which have been worn from bearing surfaces to become a corrosion product. Corrosion, however, is not the basic mechanism.

6.1.22 Functional category.

Designation assigned to functions to identify that it provides and/or supports a specific purpose. Categories are as follows:
Category 1: Space Station Manned Base (SSMB) functions required for SSMB survival.
Category 1C: SSMB functions required for crew survival
Category 2: SSMB functions required for mission success.
Category 2S: Safety monitoring and emergency control functions.
Category 3: All functions not covered by categories 1, 1C, 2, or 2S

6.1.23 Gross Isolation.

The process of identifying and locating a fault to a prime function or support function to permit reconfiguration.

6.1.24 Hard berth.

Hard berth is defined as the point in the berthing operation at which the structural/mechanical connection between two pressurized elements is capable of reacting structural loads.

6.1.25 Hook.

A hook is a software provision required solely for growth purposes, but not for current use.

6.1.26 Reserved.

6.1.27 Initial spares.

Those spares that must be identified and acquired to support production, assembly, and verification.

6.1.28 Isolation.

The process of identifying and locating a fault to a single component.

6.1.29 Limit load.

The maximum load expected on the structure during its service life including fabrication, testing, ground handling and transportation, as well as launch, on–orbit and landing mission operations.

6.1.30 Maximum operating pressure.

The maximum pressure applied to the pressure vessel by the pressurizing system with the pressure regulators and relief valves at their upper limit, with the maximum regulator fluid flow rate, and including the effects of system environment such as vehicle acceleration and pressure.

6.1.31 Mission success.

Having the operational capacity and providing the functions necessary to support users and multiple payloads.

6.1.32 Component.

Orbital Replaceable Unit is a component which is removed and replaced at the (on–orbit) organizational level of maintenance.

6.1.33 Component Status.

Indication of whether the component is fully operational, partially operational, or inoperative.

6.1.34 Component Status.

Indication of whether the component is fully operational, partially operational, or inoperative.

6.1.35 Proof pressure.

The product of the higher of the maximum design pressure or the pressure required by fracture mechanics and the proof factor.

6.1.36 Replacement spares.

Those spares that must be identified and acquired to replace parts consumed during operation, condemned during the repair process, support modification and sustain acceptable level of operation inventory.

6.1.37 Safe–life.

A design criterion under which it can be shown that the largest undetected flaw that could exist in the structure will not grow to failure when subjected to the cyclic and sustained loads and environments encountered in the specified number of service lifetimes: also, the period of time for which the integrity of the structure can be ensured in the expected operating environments.

6.1.38 Scar.

Scar is defined as any hardware provision required solely for growth purposes, but not for current use.

6.1.39 Service life.

The required duration of use for a part, assembly or end–item. Service life may be achieved by design for survival, or by maintenance, or by repair. Complete replacement is not generally considered an allowable approach.

6.1.40 SSMB survival.

A condition whereby the SSMB retains (either through system reconfiguration or maintenance actions) sufficient capability to avoid loss of the SSMB.

6.1.41 Segment.

Multiple elements, includes interrelationship of distributed systems across elements.

6.1.42 Single event effect ionizing radiation.

Single Event Effect (SEE), is a generalized category of anomalies that result from a single ionizing particle.

6.1.43 Static Force Margin.

The static force margin is the ratio of the drive force, less the force required for acceleration, divided by the resisting force, which is the force required to overcome friction and wire harness pushing or pulling. When expressed as a percent, the value is multiplied by 100%.

6.1.44 Status Information.

Data reported by components for identification or analysis of health.

6.1.45 Static Torque Margin.

The static torque margin is the ratio of the drive torque, less the torque required for acceleration, divided by the resisting torque, which is the torque required to overcome friction and wire harness bending. When expressed as a percent, the value is multiplied by 100%.

6.1.46 Time Critical Failures.

Failures which will result in adverse effects on crew safety or operational capability before the flight or ground crew can complete mitigating action.

6.1.47 Total MMH/Y.

S MMH/Y for each Corrective Maintenance Action + S MMH/Y for each Preventive Maintenance Action.

Corrective MMH/Y = K x DC x 8760 hrs/year x MTTR /Mean Time Between Failure (MTBF) K = MTBF/Mean Time Between Corrective Maintenance Actions

DC = Duty Cycle MTTR = Mean repair time for maintenance actions includes shutdown safing, gain access, remove & replace, align & adjust, service, close access, and verify. It does not include fault isolation.

Preventive MMH/Y = 8760 hrs/year x Mean Time To Perform Preventive Maintenance Action

Mean Time Between Preventive Maintenance Actions Ultimate FS. The factor by which the limit load is multiplied to obtain the ultimate load.

6.1.48 Ultimate load.

The maximum load that an unflawed structure withstands without incurring rupture or collapse. It is the product of the limit load multiplied by the ultimate factor of safety.

6.1.49 Yield FS.

The factor by which the limit load is multiplied to obtain the yield load.

6.1.50 Yield load.

The maximum load that an unflawed structure must withstand without incurring detrimental deformation. It is the product of the limit load multiplied by the yield of safety.

6.1.51 Yield margin of safety.

The ratio of allowable yield load to yield load, minus one.

6.2 Acronyms and abbreviations.

ACBM	Active Common Berthing Mechanism
ANSI	American National Standards Institute
C	Celsius
c.g.	center of gravity
CBM	Common Berthing Mechanism
cm	centimeter
dB	Decibel
deg	degrees
DOD	Department of Defense
DOF	degrees of freedom
EMCC	Eight Man Crew Configuration
eV	electron Volt
EVA	Extra Vehicular Activity
ESD	Electro Static Discharge
EVR	Extra Vehicular Robotics
F	degrees Fahrenheit
FDIR	Fault Detection Isolation and Repair
fps	feet per second

(Continued)

(Continued)

FMEA	Failure Modes and Effects Analysis
FS	Factor of Safety
g	Gravity
GOX	Gaseous Oxygen
grms	gravity root mean square
HDBK	Handbook
Hz	Hertz
IVA	Intra Vehicular Activity
ICD	Interface Control Drawing
ksi	thousand pounds per square inch
lbf	pounds force
lbm	pounds mass
LF	Load Factor
LOX	Liquid Oxygen
MMCH/Y	Mean Maintenance Crew Hour Per Year
M/OD	Meteroids and orbital debris
MS	Meteroid Shield
MSFC	Marshal Space Flight Center
MTBF	Mean Time Between Failures
MTTR	Mean Time To Repair
NA	Not applicable
NASA	National Aeronautics and Space Administration
NHB	NASA Handbook
NSTS	National Space Transportation System

(Continued)

(Continued)

OCT	Octave
ORU	Orbital Replacement Unit
PCBM	Passive Common Berthing Mechanism
PIDS	Prime Item Development Specification
PSD	Power Stcetra Density
psi	pounds per square inch
psia	pounds per square inch, absolute
RMS	Remote Manipulator System
sccs	standard cubic centimeters per second
sec	second
SS	Space Station
SSMB	Space Station Manned Based
STS	Space Transportation System
TBD	To Be Determined
Ti	Titanium
VDC	Volts, Direct Current

(Concluded)

10. APPENDIX A: Payload Deployment and Retrieval System Simulation Database

This appendix provides the appropriate portion of JSC 25134, Payload Deployment and Retrieval System Simulation Database, Version 1.0, July 1, 1991. The model within this document is that used to characterize RMS resistance, during capture, that must be accommodated by the Capture Mechanism.

CONTENTS

TABLE OF CONTENTS

PARAGRAPH		PAGE
10.	APPENDIX A: PAYLOAD DEPLOYMENT AND RETRIEVAL SYSTEM SIMULATION DATABASE	82
A.1.	SHUTTLE REMOTE MANIPULATOR SYSTEM AND ORBITER DATA	88
A.1.1	INTRODUCTION	88
A.1.2	REFERENCE FRAMES	89
A.1.2.1	DYNAMICS FRAMES	89
A.1.2.2	CONTROL SYSTEM FRAMES	89
A.1.3	ARM GEOMETRY	100
A.1.4	MASS PROPERTIES	105
A.1.5	ARM STRUCTURAL PROPERTIES	109
A.1.6	SERVO PARAMETERS	117
A.1.7	CONTROL SOFTWARE PARAMETERS	124
A.1.8	OFF–NOMINAL ARM PARAMETER SETS	131
A.1.8.1	PARAMETER SETS	131
A.1.8.2	DEFINITIONS	131
A.1.8.3	OFF–NOMINAL PARAMETER SETS	133
A.1.8.4	DDT&E PARAMETER SET	137
A.1.8.5	SELECTION OF PARAMETER SETS FOR SIMULATIONS	137

FIGURES

A.1.2–1.	OSR FRAME AND SWING–OUT FRAME.	91
A.1.2–2.	SIX JOINT (DYNAMICS) FRAMES AND EE FRAME (SHOWN IN THEIR REFERENCE131 CONFIGURATIONS: JOINT ANGLES = 0).	92
A.1.2–3.	OBAS AND ORAS.	93
A.1.2–4.	GRAPPLE FIXTURE FRAME AND PL FRAME.	96
A.1.2–5.	SIX JOINT CONTROL FRAMES (SHOWN IN THEIR REFERENCE CONFIGURATIONS: JOINT ANGLES = 0).	97
A.1.2–6.	EE REFERENCE FRAME AND EE OPERATING FRAME.	98
A.1.2–7.	PL AXIS FRAME (LEFT–HANDED FOR PFTA), PL OPERATING FRAME, AND PL REFERENCE FRAME.	99
A.1.3–1.	ARM SEGMENTS AND LINKS.	103
A.1.3–2.	PORT MPM GEOMETRY.	104
A.1.5–1.	GEARBOX STIFFNESS MATH MODEL.	114
A.1.5–2	STANDARD EE – FLIGHT RELEASABLE GRAPPLE FIXTURE MOMENT/DEFLECTION CURVE (REF 4).	115
A.1.5–3.	EE/GRAPPLE FIXTURE TORSIONAL STIFFNESS	116
A.1.6–1	BLOCK DIAGRAM FOR SRMS JOINT SURVO	121
A.1.6–2.	MOTOR TORQUE – SPEED CHARACTERISTICS FOR ARM IN DIRECT DRIVE AND BACKUP MODES.	122
A.1.7–1	ARM MODEL.	130

TABLES

A.1.2–1. DYNAMICS REFERENCE FRAMES 90

A.1.2–1. CONTROL SYSTEM REFERENCE FRAMES 95

A.1.3–1. ARM GEOMETRY PROPERTIES 101

A.1.3–1. ARM GEOMETRY PROPERTIES (CONCLUDED) 102

A.1.4–1. ARM MASS PROPERTIES – MASS AND CENTER OF MASS 106

A.1.4–2. ARM MASS PROPERTIES – INERTIA TENSOR ELEMENTS A 107

A.1.4–2. ARM MASS PROPERTIES – INERTIA TENSOR ELEMENTS A (CONCLUDED) 108

A.1.5–1. GEARBOX STIFFNESS A 110

A.1.5–2. ARM STRUCTURAL PROPERTIES 111

A.1.5–3. ORBITER INTERFACE STIFFNESS 112

A.1.5–3. ORBITER INTERFACE STIFFNESS (CONCLUDED) 113

A.1.6–1 SURVO PARAMETERS 118

A.1.6–1 SURVO PARAMETERS (CONTINUED) 119

A.1.6–1 SURVO PARAMETERS (CONCLUDED) 120

A.1.7–1. CONTROL SOFTWARE PARAMETERS 125

A.1.7–1. CONTROL SOFTWARE PARAMETERS (CONTINUED) 126

A.1.7–1. CONTROL SOFTWARE PARAMETERS (CONTINUED) 127

A.1.7–1. CONTROL SOFTWARE PARAMETERS (CONTINUED) 128

A.1.7–1. CONTROL SOFTWARE PARAMETERS (CONCLUDED) 129

A.1.8–1. PARAMETER COMBINATION SETTINGS A 132

A.1.8–2. OFF–NOMINAL PARAMETER SETS 134

A.1.8–2. OFF–NOMINAL PARAMETER SETS (CONTINUED) 135

A.1.8–2. OFF–NOMINAL PARAMETER SETS (CONTINUED) 136

A.1.8–2. OFF–NOMINAL PARAMETER SETS (CONCLUDED) 137

A.1.8–3. DDT&E PARAMETERS 138

A.1.8–3. DDT&E PARAMETERS (CONTINUED) 139

A.1.8–3. DDT&E PARAMETERS (CONCLUDED) 140

A.1.8–4. SELECTION OF PARAMETER SETS FOR SIMULATION 141

A.1.8–5. PARAMETER SETS USED IN SIMFAC MALFUNCTION SIMULATIONS 142

ACRONYMS AND ABBREVIATIONS

ABE	Arm Based Electronics
ASAD	All Singing, All Dancing (SPAR's high–fidelity non–real–time simulation)
BFS	Backup Flight System
CCTV	Closed Circuit Television
CLA	Color Lens Assembly (for CCTV)
CSDL	Charles S. Draper Laboratories
D/A	Digital to Analog
DAP	On–Orbit Digital Autopilot
D&C	Display and Control
DDT&E	Design, Development, Test, and Evaluation
DTD	Detailed Test Objective
ECI	Earth Centered Inertial (reference system)
EE	End Effector
EEOP	End Effector Operating System
EIDP	End Item Data Package
EMF	Electromotive Force
ERBS	Earth Radiation Budget Satellite
EVA	Extravehicular Activity
FCS	Flight Control System
FMEA	Failure Modes and Effects Analysis
FOV	Field of View
FSSR	Functional Subsystem Software Requirements
GPC	General Purpose Computer
HAL	High Order Articulated Language
IC	Initial Conditions (generally used to identify the initial state of a simulation)
ICD	Interface Control Document
ID	Identification
IECM	Induced Environment Contamination Monitor (payload on STS–3 and STS–4)
ISF	Industrial Space Facility
JPC	Joint Power Conditioner
JSC	Lyndon B. Johnson Space Center
LDEF	Long Duration Exposure Facility (payload on STS–13 and STS–32)
LRU	Line Replaceable Unit
MCIU	Manipulator Controller Interface Unit

MDA	Motor Drive Amplifier
MLA	Monochrome Lens Assembly (for CCTV)
MPM	Mechanical Positioning Mechanism
MSID	Measurement Stimulation Identification
NASTRAN	NASA Structural Analysis
OBAS	Orbiter Body Axis System
ORAS	Orbiter Rotation Axis System
OSR	Orbiter Structural Reference (system)
OV	Orbiter Vehicle
PAS	Payload Axis System
PDRS	Payload Deployment and Retrieval System
PFS	Primary Flight System
PFTA	Payload Flight Test Article (a test payload for the SRMS, flown on STS–8)
PL	Payload
PLOP	Payload Operating System (a reference system centered at the PDR, used for operation of the SRMS)
POR	Point of Resolution (a point and orientation located away from the SRMS EE)
PRCS	Primary Reaction Control System (for Orbiter attitude control)
PTU	Pan/Tilt Unit
PWM	Pulse Width Modulator
RCS	Reaction Control System
RHC	Rotational Hand Controller
RI	Rockwell International
RID	Review Item Disposition
RMS	Remote Manipulator System
RTLS	Return to Launch Site
SAIL	Shuttle Avionics Integration Laboratory
SHP	Shoulder Pitch
SHY	Shoulder Yaw
SIMFAC	Simulation Facility (the SPAR real–time SRMS simulation)
SMD	Structures and Mechanics Division
SOP	Subsystem Operating Program
SPAS	Shuttle Pallet Satellite
SRAD	Shuttle Radiator Assembly Demonstration
SRMS	Shuttle Remote Manipulator System
SRU	Shop Replaceable Unit
STS	Space Transportation System

SYNCOM	Synchronous Communications Satellite
TBD	To Be Determined
THC	Translational Hand Controller
TVC	Television Camera
VL	Viewing Light
VRCS	Vernier Reaction Control System
WLA	Wide–Angle Color Lens Assembly (for CCTV)

A.1. SHUTTLE REMOTE MANIPULATOR SYSTEM AND ORBITER DATA

A.1.1 INTRODUCTION

The Shuttle Remote Manipulator System (SRMS) arm parameters and their values were defined originally in the SRMS Master Parameters List, which was periodically updated to reflect the current values of the parameters as the design of the SRMS evolved. Three values of each parameter are given: nominal, minimum, and maximum. The nominal value of a parameter is the value that was used to design the arm component with which the parameter is associated. The actual value of the parameter may be different from the nominal value, but it is bounded by its minimum and maximum values. A subset of parameters from are used in the SRMS simulation; hence, there was a need to form the PDRS Database. The particular set that contains the nominal values of the simulation parameters has been known as the nominal parameter set. Different sets that contain values other than the nominal values (from using either test measurement data or combinations of minimum, nominal, and maximum values) are called off–nominal parameter sets. The off–nominal sets and their uses will be discussed in subsection A.1.8.

The nominal parameter set for SRMS is defined in subsections A.1.3 through A.1.8. In addition, other arm data used in SRMS simulation, such as reference frames and control software parameters, are also presented. The Orbiter related parameters, such as mass properties and camera information, as well as reaction control system jet information, are presented in subsection A.1.9.

A.1.2 REFERENCE FRAMES

The reference frames for the dynamics and control of the SRMS can be divided into two groups: dynamics frames and control frames.

A.1.2.1 DYNAMICS FRAMES

The following frames are used in the development of most SRMS math models.

1. Orbiter Structural Reference (OSR) frame – fixed to the Orbiter
2. Swing–out joint frame – fixed to the swing–out joint; rotates from the stowed configuration for launching and landing conditions to the deployed configuration for normal operating conditions
3. Six joint frames – fixed to the outboard portion of each joint
4. End Effector (EE) frame – fixed to the EE
5. Grapple fixture frame – fixed to the grapple fixture
6. Payload (PL) frame – fixed to the PL

Figures A.1.2–1 through A.1.2–3 illustrate the dynamics frames and table A.1.2–1 defines their origins and axis orientations. Note that in the previous description of the reference frames, the word ”reference” was deleted; this was done purposely to avoid confusion because ”reference” was given a special meaning in the SRMS development (e.g., see subsection A.1.2.2). Also, joint frames other than those shown infigure A.1.2–2 can also be used for dynamical analyses of the SRMS (e.g., the joint control frames discussed in subsection A.1.2.2).

A.1.2.2 CONTROL SYSTEM FRAMES

The following frames are used in the control system of the SRMS.

1. Orbiter Body Axis System (OBAS) – fixed to the Orbiter
2. Orbiter Rotation Axis System (ORAS) – fixed to the Orbiter
3. Arm reference frame – fixed to the SRMS

TABLE A.1.2–1.– DYNAMICS REFERENCE FRAMES

Frame	Origin	Axis orientation
OSR	236 in. forward of Orbiter nose, 400 in. below Orbiter centerline	X along Orbiter longitudinal axis and pointing towards its tail Y towards Orbiter starboard Z completes right–handed triad
Swing–out	Swing–out joint center X = 679.5 in. Y = –96.5 in. Z = 412.25 in. (in OSR frame)	Obtained by rotating OSR by 5 degrees about its X axis S = –11.92 for stowed port arm S = 19.48 for deployed port arm S = 11.92 for stowed starboard arm
Joint	Joint center	Parallel to OSR when six joint angles and swing–out joint angle are all zero (reference configurations); frame moves with outboard structure of joint
EE	EE tip at center of its opening	X along EE axis pointing away from its opening Z towards camera base Y completes right–handed triad
Grapple fixture	Grapple fixture base	X along grapple fixture shaft pointing away from PL Z towards center of target aid Y completes right–handed triad
PL	PL mass center or PL–fixed point	As defined by the analyst

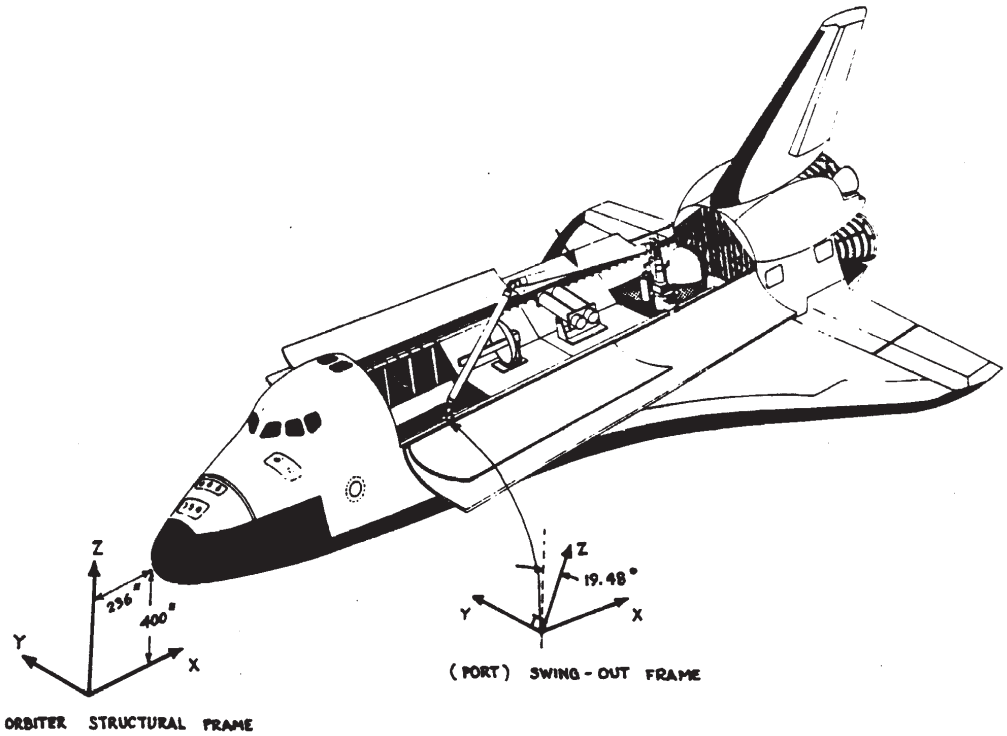

Figure A.1.2–1.– OSR frame and swing–out frame.

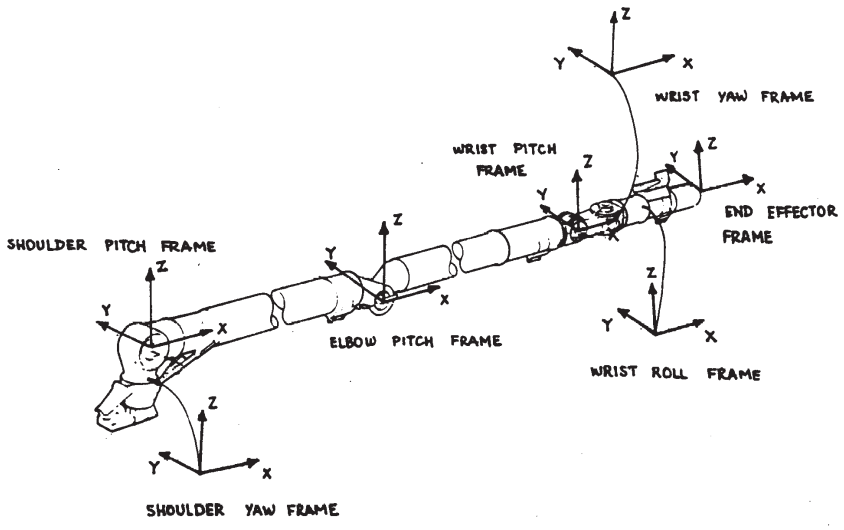

Figure A.1.2–2.– Six joint (dynamics) frames and EE frame (shown in their reference configurations: joint angles = 0).

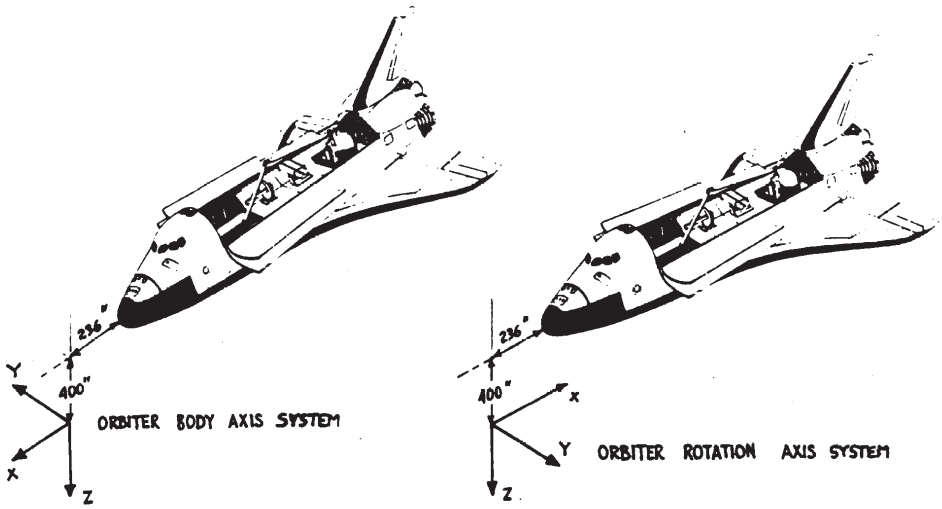

Figure A.1.2–3.– OBAS and ORAS.

4. Six joint control reference frames – fixed to the outboard portion of each joint

5. EE reference frame – fixed to the EE

6. End Effector Operating System (EEOP) frame – fixed to the EE

7. Payload Axis System (PAS) – fixed to the PL

8. PL reference frame – fixed to the PL

9. PL operating frame – fixed to the PL

Figures A.1.2–4 through A.1.2–7 illustrate the control system frames, and table A.1.2–2 defines their origins and axis orientations. The joint control reference frames can also be used in the dynamical analyses of the SRMS. Note that the joint (dynamics) frames are actually used in the development of the SRMS control algorithms; as a result, the SRMS control software is based on the joint (dynamics) frames. The input/output to the original SRMS control software is modified to agree with the joint control reference frames. For details, see the Space Shuttle Operation Level C Functional Subsystem Software Requirements Document, Remote Manipulator System (RMS).

It is important to note that there is an offset of 0.52 degrees between the grapple fixture frame and the EEOP frame. The pitch–yaw–roll Euler sequence from the grapple fixture frame to the EEOP frame is:

[0.0 deg., 180.0 deg., 0.52 deg.]

TABLE A.1.2–1.– CONTROL SYSTEM REFERENCE FRAMES

Frame	Origin	Axis orientation
OBAS	236 in. forward of Orbiter nose, 400 in. below Orbiter centerline	X along Orbiter longitudinal axis and pointing away from Orbiter tail Y towards Orbiter starboard Z completes right–handed triad
Orbiter rotation axis	236 in. forward of Orbiter nose, 400 in. below Orbiter centerline	X along Orbiter longitudinal axis and pointing towards Orbiter tail Y towards Orbiter port Z completes right–handed triad
Arm reference	Shoulder yaw joint[a]	Parallel to shoulder yaw dynamics frame
Joint (control)	Joint	Parallel to Orbiter rotation axis frame when six joint angles and swing–out joint angle are all zero (reference configurations); frame moves with outboard portion of joint
EE reference	EE tip at center of its opening	Parallel to OSR when arm is in deployed configuration and all six joint angles are zero
EEOP	EE tip at center of its opening	Parallel to Orbiter rotation axis frame when arm is in deployed configuration and all six joint angles are zero
PAS	PL–fixed point	As defined by PL designer

[a]See table A.1.2–1 for origin coordinates.

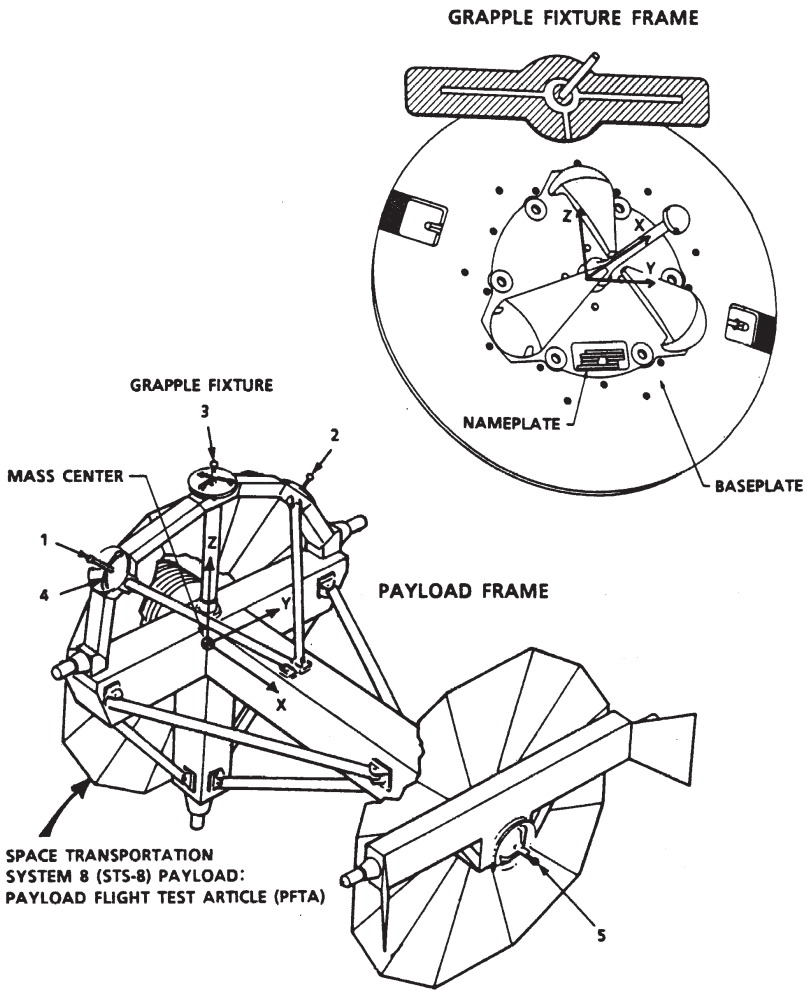

Figure A.1.2–4.– Grapple fixture frame and PL frame.

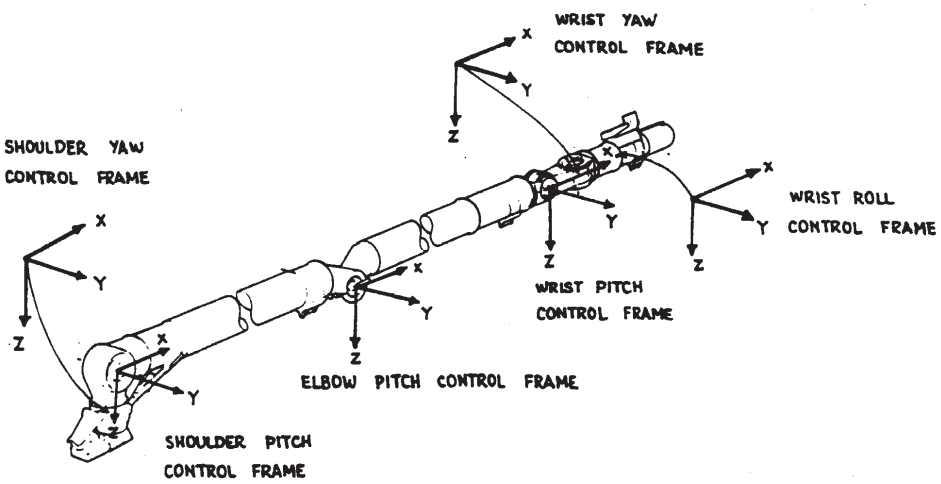

Figure A.1.2–5.– Six joint control frames (shown in their reference configurations: joint angles = 0).

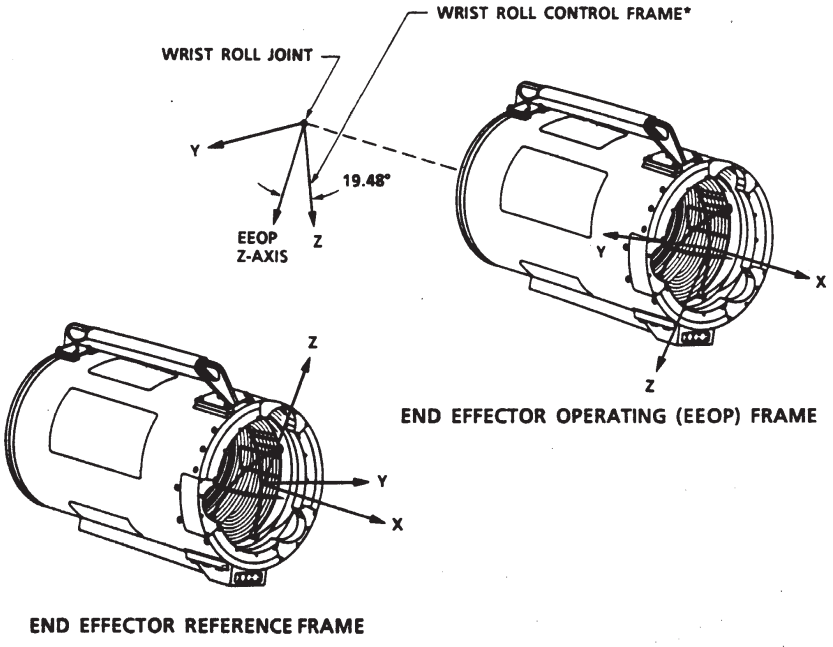

*The wrist roll frame for the port arm is rolled 19.48 deg. clockwise from the end effector frame (looking from the wrist roll joint to the end effector).

Figure A.1.2–6.– EE reference frame and EE operating frame.

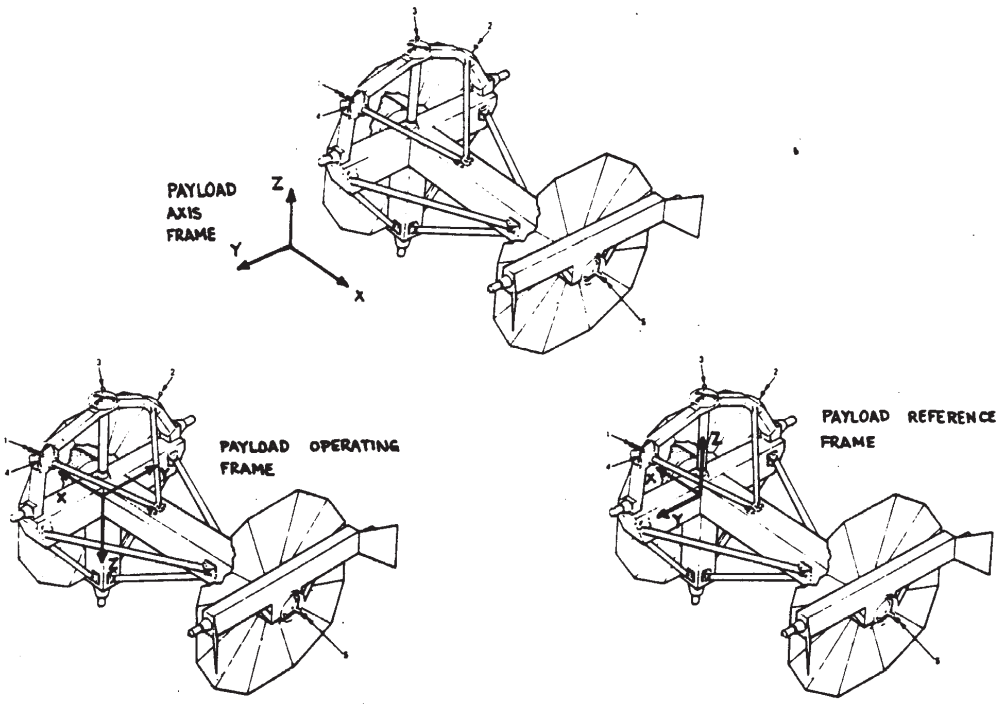

Figure A.1.2–7.– PL axis frame (left–handed for PFTA), PL operating frame, and PL reference frame.

A.1.3 ARM GEOMETRY

The SRMS arm consists of six control joints and two interfaces (with the Orbiter via the Mechanical Positioning Mechanism (MPM) and with the PL via the grapple fixture), which are linked together by support structures (e.g., joint housings and arm booms). In SRMS math models, the structure between two consecutive joints is called a link. The seven SRMS links are shown in figure A.1.3–1. Each link is made up of three segments (representing an inboard joint housing, a support structure, and an outboard joint housing) except links 1 and 7, which have only two segments each. The link segments and their physical dimensions/descriptions are given in table A.1.3–1. The geometry of the structure from the longeron to the shoulder pitch joint is shown in figure A.1.3–2.

The link diameters are not given. Based on the dynamic envelope of 15 in. and a clearance of 0.75 in. around the arm, the link diameter can be estimated at approximately 13.5 in. Note that the link diameter value is often not needed in the SRMS simulation but is needed to generate a realistic graphic representation of the arm. Also, it is needed to compute the moment of inertia about the link longitudinal axis in models like All Singing, All Dancing (ASAD) models, as mentioned in subsection A.1.4.

The MPM rotates the arm from its stowed position to its operational position outside the payload bay. Prior to closing the payload bay doors, the arm must be repositioned to its stowed position. Figure A.1.3–2 details the relevant dimensions, locations, and swing–out and swing–in angles of the MPM.

TABLE A.1.3–1.– ARM GEOMETRY PROPERTIES

Segment	Length (inches)	Description	Link no.
L01	11.489	Structure between the swing–out joint and the SPAR/RI pedestal interface	1
L12	11.000	Pedestal interface transition piece Inner yaw sleeve One–half of shoulder yaw bearing	1
L2’3	1.850	Outer yaw sleeve One–half of shoulder yaw bearing	2
L23	3.500	Shoulder yaw transition piece	2
L23’	6.650	Shoulder pitch center toroid One–half of shoulder pitch bearing	2
L3’4	28.466	One–half of shoulder pitch bearing Outer toroids Shoulder pitch transition piece Electronics housing	3
L34	197.084	Upper arm boom	3
L34’	25.500	Elbow electronics compartment Elbow transition piece Elbow pitch lug One–half of elbow pitch bearing	3
L4’5	12.500	One–half of elbow pitch bearing Inner toroid Transition piece	4
L45	225.984	Lower arm boom	4
L45’	39.466	Wrist electronics compartment Wrist pitch transition piece Wrist pitch lugs	4
L5’6	6.000	One–half of wrist pitch bearing Wrist pitch inner toroid	5

NOTES:

a. Elbow offset = 6.0 in.

b. Distance between swing–out joint and longeron = 2.25 in.

c. Diameter of arm segment = ~13.5 in. (based on 15–in. dynamic envelope and 0.75–in. clearance around the arm).

d. Position of swing–out joint in OSR frame:
X = 679.5 in.
Y = –96.5 in.
Z = 412.25 in.

e. The EE has approximately 0.5–in. length in common with the wrist roll, thus L6’7 + L67 + L67’ + L7’8 + L78 = 56 in.

TABLE A.1.3–1.– ARM GEOMETRY PROPERTIES (Concluded)

Segment	Length (inches)	Description	Link no.
L56	6.000	Wrist pitch to wrist yaw transition piece	5
L56’	6.000	Wrist yaw inner toroid One–half of wrist yaw bearing	5
L6’7	9.966	Yaw outer toroid Wrist yaw transition piece	6
L67	10.140	Aft wrist electronics compartment	6
L67’	9.894	Wrist roll inner sleeve One–half or wrist roll bearing	6
L7’8	4.500	One–half or wrist roll bearing Wrist roll outer sleeve	7
L78	21.500	EE	7

NOTES:

a. Elbow offset = 6.0 in.

b. Distance between swing–out joint and longeron = 2.25 in.

c. Diameter of arm segment = ~13.5 in. (based on 15–in. dynamic envelope and 0.75–in. clearance around the arm).

d. Position of swing–out joint in OSR frame:
X = 679.5 in.
Y = –96.5 in.
Z = 412.25 in.

e. The EE has approximately 0.5–in. length in common with the wrist roll, thus L6’7 + L67 + L67’ + L7’8 + L78 = 56 in.

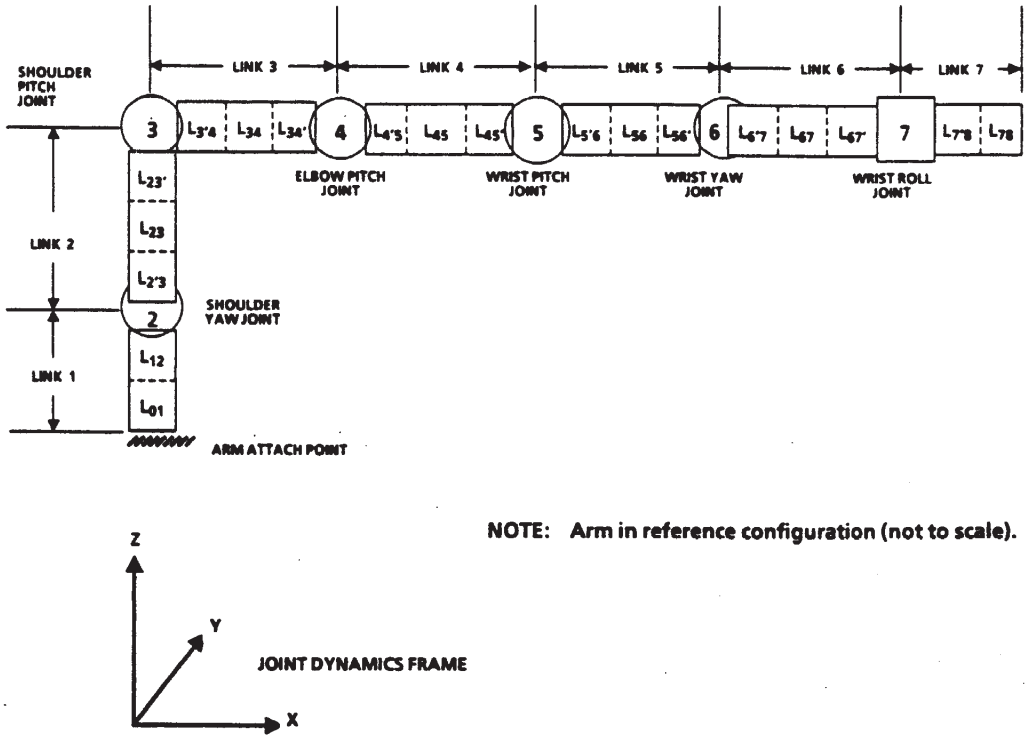

Figure A.1.3–1.– Arm segments and links.

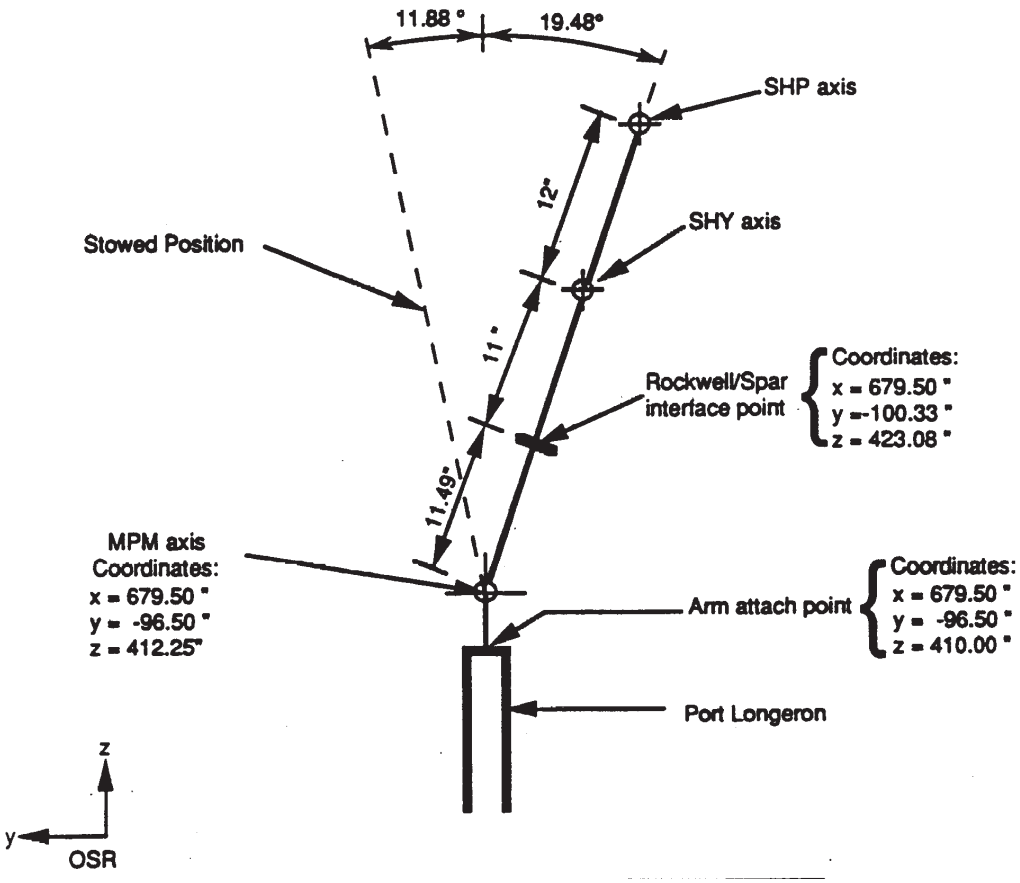

PORT MPM GEOMETRY

cross section looking aft
dimensions in inches
referenced to orbiter structural reference coordinates
drawn by RWM 10/16/89 Source: ICD 3–0018–01, sheet 5

Definitions:
SHP – Shoulder Pitch
SHY – Shoulder Yaw

Figure A.1.3–2.– Port MPM geometry.

A.1.4 MASS PROPERTIES

The rigid–body mass properties of each link are given in tables A.1.4–1 and A.1.4–2 in terms of mass, center of mass location, and inertia tensor of the link with respect to its mass center, expressed in the joint (dynamics) frame. Two sets of data are presented: one that is derived from and the other computed for ASAD–like models.

In ASAD each link is modeled as a thin–walled beam element which has a circular cross section and uniform mass distribution. As a result, the link mass center is located at the midpoint of the beam (on the beam axis), and the moments of inertia can be computed from the link mass, link length, and link diameter (13.0 in.).

TABLE A.1.4–1.– ARM MASS PROPERTIES – MASS AND CENTER OF MASS

Link no.	Mass (slugs) (a)	Center of mass (X, Y, Z) (inches)	
		SRMS master parameters	ASAD model
1	4.333	0.0 0.0 +11.245	0.0 0.0 +11.245
2	2.201	0.0 0.0 +6.0	0.0 0.0 +6.0
3	9.5485	125.525 0.0 –1.11	125.525 0.0 0.0
4	5.9901	138.975 0.0 +0.26	138.975 0.0 +0.0
4	(6.86)	Not available; use numbers above	Not available; use numbers above
5	0.5809	9.000 0.0 0.0	9.0 0.0 0.0
6	3.1479	15.000 0.0 0.0	15.0 0.0 0.0
7	3.098	13.000 0.0 0.0	13.0 0.0 0.0

[a]Numbers in parentheses are to be used only when the arm is equipped with the elbow camera.

[b]Mass center is assumed to be located at the geometric center of the link.

TABLE A.1.4–2.– ARM MASS PROPERTIES – INERTIA TENSOR ELEMENTS[a]

Link no.	Inertia tensor elements (slug–feet^2)			
	SRMS master parameters (b)		ASAD model (b)	
1	IXX =	2.70253	IXX =	1.2672
	IYY =	2.80506	IYY =	1.2672
	IZZ =	0.50636	IZZ =	1.272
	IXY =	–0.00324	IXY =	0.0
	IXZ =	–0.00345	IXZ =	0.0
	IYZ =	0.37340	IYZ =	0.0
2	IXX =	0.82213	IXX =	0.1833
	IYY =	1.04531	IYY =	0.1833
	IZZ =	0.43880	IZZ =	0.6463
	IXY =	0.01425	IXY =	0.0
	IXZ =	0.05871	IXZ =	0.0
	IYZ =	–0.02698	IYZ =	0.0
3	IXX =	2.37834	IXX =	2.8025
	IYY =	736.55031	IYY =	347.955
	IZZ =	735.47586	IZZ =	347.955
	IXY =	1.42195	IXY =	0.0
	IXZ =	–6.77435	IXZ =	0.0
	IYZ =	–0.22253	IYZ =	0.0
4	IXX =	1.17266	IXX =	1.7596
	IYY =	466.80177	IYY =	267.8036
	IZZ =	466.51600	IZZ =	267.8036
	IXY =	–0.59162	IXY =	0.0
	IXZ =	2.79232	IXZ =	0.0
	IYZ =	–0.05936	IYZ =	0.0
4	IXX =	(2.35266)	IXX =	(2,0152)
	IYY =	(587.41873)	IYY =	(306.7)
	IZZ =	(586.24435)	IZZ =	(306.7)
	IXY =	(–4.58163)	IXY =	(0.0)
	IXZ =	(–8.25480)	IXZ =	(0.0)
	IYZ =	(0.30973)	IYZ =	(0.0)
5	IXX =	0.06583	IXX =	0.1704
	IYY =	0.29678	IYY =	0.1088
	IZZ =	0.29635	IZZ =	0.1088
	IXY =	0.00000	IXY =	0.0
	IXZ =	0.00000	IXZ =	0.0
	IYZ =	0.00000	IYZ =	0.0

[a]The beam diameter is assumed to be 13.0 in. Products of inertia are based on negative integral derivation: IXY = –PXY, IXZ = –PXA, and IYZ = –PYZ.

[b]Numbers in parentheses are to be used only when the arm is equipped with the elbow camera.

[c]Moment of inertia of each link is computed in ASAD using formulas for thin–walled cylindrical beam with circular cross section and uniform mass distribution.

TABLE A.1.4–2.– ARM MASS PROPERTIES – INERTIA
TENSOR ELEMENTS[a] (Concluded)

Link no.	Center of mass (X, Y, Z) (inches)			
	SRMS master parameters (b)		ASAD model (b)	
6	IXX =	0.30110	IXX =	0.9254
	IYY =	3.45171	IYY =	1.6406
	IZZ =	3.45042	IZZ =	1.6406
	IXY =	0.00108	IXY =	0.0
	IXZ =	–0.00540	IXZ =	0.0
	IYZ =	–0.00022	IYZ =	0.0
7	IXX =	1.40361	IXX =	0.9107
	IYY =	2.81477	IYY =	1.212
	IZZ =	2.08199	IZZ =	1.212
	IXY =	–0.28426	IXY =	0.0
	IXZ =	–0.71249	IXZ =	0.0
	IYZ =	0.26052	IYZ =	0.0

[a]The beam diameter is assumed to be 13.0 in. Products of inertia are based on negative integral derivation: IXY = –PXY, IXZ = –PXA, and IYZ = –PYZ.

[b]Numbers in parentheses are to be used only when the arm is equipped with the elbow camera.

[c]Moment of inertia of each link is computed in ASAD using formulas for thin–walled cylindrical beam with circular cross section and uniform mass distribution.

A.1.5 ARM STRUCTURAL PROPERTIES

The ARM structural properties are defined in tables A.1.5–1 and A.1.5–2 and figure A.1.5–1 in terms of joint gearbox stiffness and link bending/torsional stiffnesses. The gearbox stiffness is, in fact, nonlinear due to the gear backlash, which results from the engagement of gear teeth in different stages of the planetary gear. In the simulation model, the gearbox characteristics are represented by a parabolic curve and a straight line as shown in figure A.1.5–1. The data in table A.1.5–1 are provided to suit this model and represent the gearbox stiffness as seen at the output side of the gearbox (i.e., the joint side).

The link bending and torsional stiffnesses are defined in terms of EI and GJ, respectively. The subscripts in the EI parameter refer to the joint axes when the arm is in its reference configuration (i.e., all joint angles are zero). For detailed structural analyses of the arm, the Master Parameters List can be used to obtain the elongation stiffness, EA, (Young's modulus x cross–sectional area) and the shear stiffness, GA (shear modulus x cross–sectional area effective in shear). These two stiffnesses do not affect the arm dynamical response significantly and are often neglected in the SRMS dynamics simulation math models.

The arm/Orbiter interface stiffness is given in table A.1.5–3 for different loading conditions. Deployed arm and stowed arm configurations are both included. The end effector/grapple fixture bending and torsional stiffnesses are shown in figures A.1.5–2 and A.1.5–3, respectively, for the standard grapple fixture.

TABLE A.1.5–1.– GEARBOX STIFFNESS[a]

Joint	Backlash half–angle B_L* (radians)	Torque intercept T_Δ* (foot–pounds)	Linear stiffness K_G* (foot–pounds/ radians)
Shoulder yaw	0.000916	312.5	1.18 E6
Shoulder pitch	0.000813	375.	2.11 E6
Elbow pitch	0.000714	253.	1.90 E6
Wrist pitch	0.00125	236.8	1.05 E6
Wrist yaw	0.00125	236.8	1.05 E6
Wrist roll	0.00125	236.8	1.05 E6

[a]These values are outboard of gearbox.

TABLE A.1.5–2.– ARM STRUCTURAL PROPERTIES

Segment	Bending stiffness (pound–inches^2)			Torsional stiffness GJ (pound–inches^2)
	EI_{XX}	EI_{YY}	EI_{ZZ}	
L12	5.49 E8	4.58 E8		6.94 E8
L2’3	1.53 E8	1.27 E8		1.16 E9
L23	7.18 E8	1.21 E9		4.80 E8
L23’	5.26 E8	7.68 E9		3.05 E8
L3’4		8.13 E8	7.50 E8	3.75 E8
L34		1.47 E9	1.47 E9	7.39 E8
L34’		5.44 E8	4.50 E8	2.65 E8
L4’5		4.92 E8	3.51 E8	2.80 E8
L45		9.83 E8	9.83 E8	5.17 E8
L45’		2.07 E8	1.76 E8	1.03 E8
L5’6		9.72 E7	1.04 E8	1.04 E8
L56		7.22 E7	7.22 E7	4.32 E7
L56’		9.72 E7	6.62 E7	9.72 E7
L6’7		5.01 E7	7.28 E7	9.26 E7
L67		1.72 E8	1.72 E8	1.45 E8
L67’		3.71 E7	3.64 E7	6.78 E7
L7’8		4.45 E7	4.37 E7	8.20 E7
L78[a]		9.80 E6	9.80 E6	1.86 E8

[a]This value is good for EE bending moments above 350 ft/lb. For lower load levels change as
follows: EI_{ZZ} = 9.7 E7 and EI_{YY} = 9.7 E7. Also see attached moment/bending curves,
figures 1.5–2 and 1.5–3.

TABLE A.1.5–3.– ORBITER INTERFACE STIFFNESS

(a) Case 1A: Deployed port arm for moment MZ < 13,680 in–lb

Applied load	Stiffness					
	T_X (pounds/ inch)	T_Y (pounds/ inch)	T_Z (pounds/ inch)	R_X (inch–pounds/ radian)	R_Y (inch–pounds/ radian)	R_Z (inch–pounds/ radian)
F_X, pounds	112,420	–3,649.1	–18,611	–16,694	–459,880	15,300
F_Y, pounds		14,702	–924.72	89,457	13,496	–11,482
F_Z, pounds			47,188	1,397.5	67,750	5,854.5
M_X, inch–, pounds				2,372,200	61,373	–49,036
M_Y, inch–, pounds	Symmetric				11,362,000	–63,043
M_Z, inch–pounds						8,359,000

(b) Case 1B: Deployed port arm for moment MZ < 13,680 in–lb

Applied load	Stiffness					
	T_X (pounds/ inch)	T_Y (pounds/ inch)	T_Z (pounds/ inch)	R_X (inch–pounds/ radian)	R_Y (inch–pounds/ radian)	R_Z (inch–pounds/ radian)
F_X, pounds	112,410	–3,643.9	–18,614	–16,652	–459,850	11,538
F_Y, pounds		14,698	–922.74	89,440	13,475	–8,659.4
F_Z, pounds			47,187	1,405.9	67,761	4,415.1
M_X, inch–, pounds				2,372,100	61,482	–36,980
M_Y, inch–, pounds	Symmetric				11,362,000	–47,543
M_Z, inch–pounds						6,303,900

NOTES:

a. Reference node: X_0 = 679.50 in., Y_0 = –100.33 in., and Z_0 = 423.08 in.

b. Corrected MPM test measurements and Orbier Vehicle 099 (OV–099) longeron stiffness test measurements are incorporated in these matrices.

TABLE A.1.5–3.– ORBITER INTERFACE STIFFNESS (Concluded)

(c) Case 2: Stowed port arm – Stiffness of the Stowed Shoulder Fitting of the Manipulator Positioning Mechanism (MPM)

Flexibility	Load					
	F_x	F_Y	F_Z	M_x	M_Y	M_Z
K_x	8.80 E–6 in/lb	0	0	0	–1.46 E–7 in/in–lb	0
K_Y	0	3.70 E–5 in/lb	0	7.08 E–7 in/in–lb	0	0
K_Z	0	0	1.83 E–6 in/lb	0	0	0
Θ_x	0	7.08 E–7 rad/lb	0	3.35 E–7 rad/in–lb	0	0
Θ_Y	– 1.46 E–7 rad/lb	0	0	0	4.74 E–8 rad/in–lb	0
Θ_Z	0	0	0	0	0	9.70 E–8 rad/in–lb

NOTES:

a. The ”0” terms are negligible.

b. Reference node 3: X_0 = 679.50 in., Y_0 = –94.13 in., and Z_0 = 423.49 in.

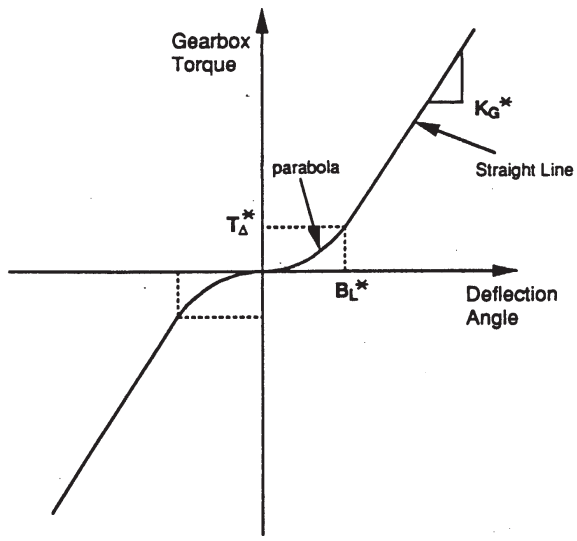

B_L* = Gearbox backlash half angle as seen on joint side of the gearbox.
T_Δ* = Gearbox torque at the backlash half angle as seen on the joint side.
K_G* = Gearbox linear stiffness as seen on the joint side.

Figure A.1.5–1.– Gearbox stiffness math model.

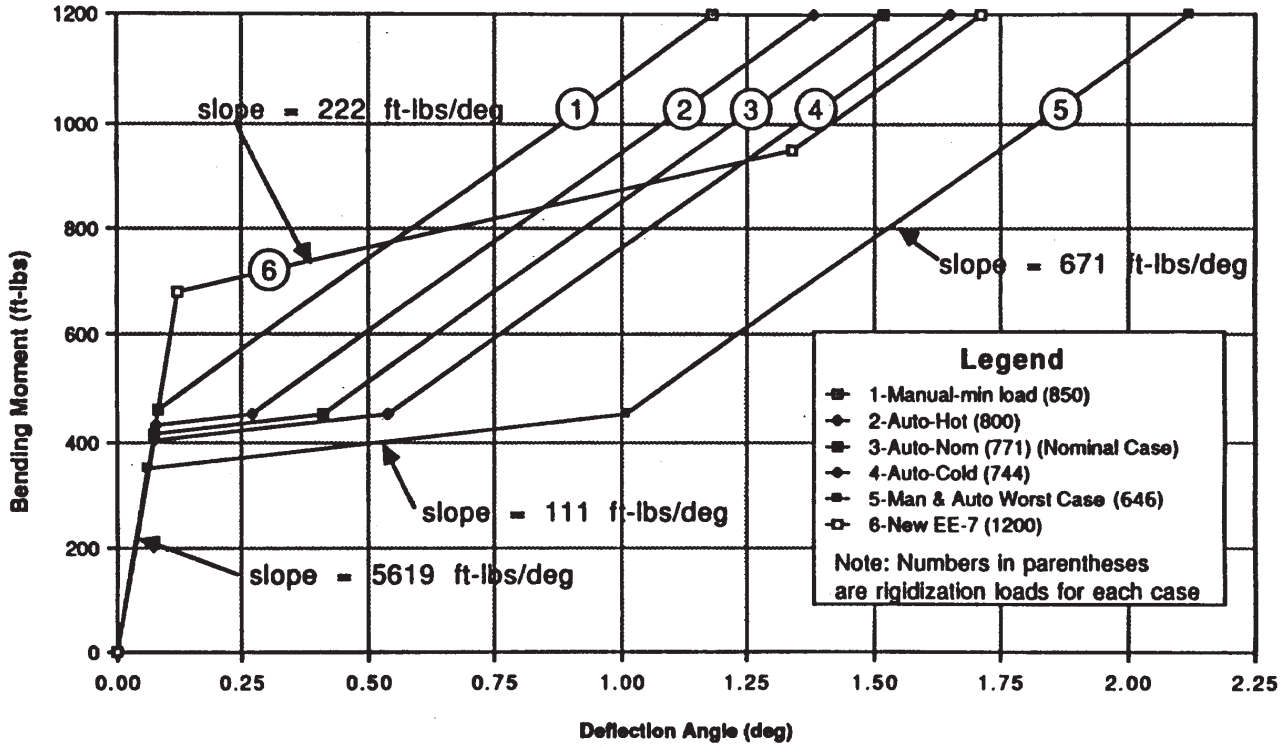

Figure A.1.5–2.– Standard EE – flight releaseable grapple fixture moment/deflection curve (ref. 4)

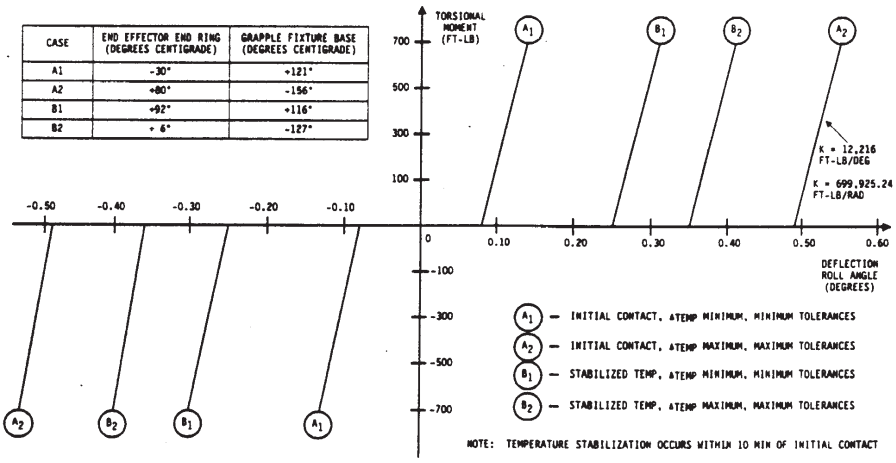

Figure A.1.5–3.– EE/grapple fixture torsional stiffness

A.1.6 SERVO PARAMETERS

The math model for the SRMS joint servo is shown in figure A.1.6–1. The servo parameters are presented in table A.1.6–1 in terms of their mnemonics, which are arranged in alphabetical order with cross–references to the symbols in figure A.1.6–1. Some parameters are designated as critical parameters because they affect the servo performance significantly. See the SRMS Parameter Sensitivity Study.

The gearbox parameters presented in table A.1.6–1 consist of:

1. Gear ratio

2. Gearbox forward and back drive efficiencies

3. Backlash half–angle

4. Linear stiffness

5. Nonlinear stiffness (i.e., torque intercept)

The latter three parameters are in fact the same as those in table A.1.5–1, but they are given as seen from the motor side of the gearbox in table A.1.6–1. The conversions from one set to another involve the factors of gear ratio and its square.

The motor torque–speed characteristics are shown in figure A.1.6–2 for the arm in direct drive and backup modes. In these two modes the voltage applied to the motor is constant. In other control modes the Motor Drive Amplifier (MDA) output (which effectively is the voltage applied to the motor) varies with the command and motor rate. As a result no motor (torque–speed) characteristics for other control modes are shown. Note that the units in figure A.1.6–2 are in ounce–inches and radians/second.

It is also to be noted that the command scaling gains K1 and K2 and the threshold L described in the next subsection, which are used to shape the motor rate command to

TABLE A.1.6–1.–SERVO PARAMETERS

Mnemonic	Symbol	Critical parameter (yes/no)	Description	Units	Joint					
					Shoulder yaw	Shoulder pitch	Elbow pitch	Wrist pitch	Wrist yaw	Wrist roll
BL	BL	Yes	Gearbox backlash half–angle as seen on the motor side, at which the gearbox stiffness curve becomes nonlinear (see figure 1.5–1)	Radians	1.6872	1.4983	0.8998	0.9222	0.9234	0.9222
ETAB	η_s	Yes	Gearbox back drive efficiency	Percent	78.0	78.5	76.5	77.3	77.3	77.3
ETAF	η_f	Yes	Gearbox forward drive efficiency	Percent	84.5	79.0	83.5	82.5	82.5	82.5
JM	J_M	No	Moment of inertia of the motor and its gearbox about the motor shaft axis	Slug–feet^2	2.71 E–4	2.71 E–4	2.905 E–4	2.563 E–4	2.563 E–4	2.563 E–4
KA	K_A	Yes	MDA gain	Volts/volt	1.92	1.92	1.92	1.92	1.92	1.92
KS	K_S	No	Motor back Electromotive Force (EMF) gain	Volts/radian/second	0.235	0.235	0.235	0.235	0.235	0.235
KD	K_D	No	Digital tachometer gain	Counts/radian/second	11.37778	11.37778	11.37778	11.37778	11.37778	11.37778
KDA	K_{DA}	No	Digital–to–Analog (D/A) converter gain	Volts/count	0.1615	0.1615	0.1615	0.1615	0.1615	0.1615
KG	K_G	Yes	Gearbox linear stiffness, as seen from the motor side	Foot–pounds/radian	0.3478	0.6212	1.1962	1.9292	1.924	1.9292
KI	K_I	No	Analog tachometer processing gain	Volts/radian/second	0.12	0.12	0.12	0.12	0.12	0.12

[a] Minimum, not nominal.

[b] SRMS Joint Servo and Gearbox Math Model (ref. 7, p. A–2)

[c] Servo Motor Resistance: Resolution of the Conflicting Data in the PDRS Database (ref. 8) gives the value of motor + MDA resistance as 4.12 ohms

[d] Space Shuttle Remote Manipulator System Design Definition Report (ref. 9, p. 11–4)

[e] Simulation Plan and Procedure for Delta Phase V SRMS Verification and Certification (ref. 10, p. C–2)

TABLE A.1.6–1.–SERVO PARAMETERS (Continued)

Mnemonic	Symbol	Critical parameter (yes/no)	Description	Units	Joint					
					Shoulder yaw	Shoulder pitch	Elbow pitch	Wrist pitch	Wrist yaw	Wrist roll
KT	K_1	No	Motor torquing sensitivity	Foot–pounds/amp	0.17	0.17	0.17	0.17	0.17	0.17
KTR	K_{1R}	No	Integral trim gain	Sec [1]	0.05	0.05	0.05	0.05	0.05	0.05
LA	L_A	No	MDA saturation voltage	Volts	+/–20	+/–20	+/–20	+/–20	+/–20	+/–20
LD	L_0	No	D/A converter input limit	Counts	+/–63	+/–63	+/–63	+/–63	+/–63	+/–63
LI	L_I	No	Analog tachometer processing saturation voltage	Volts	+/–13	+/–13	+/–13	+/–13	+/–13	+/–13
LT	L_T	Yes	Integral trim limit voltage	Volts	1.5	1.5	1.5	1.5	1.5	1.5
N	N	No	Gear ratio	No dimensions	1841.953431	1842.953431	1260.28392	737.740879	738.740879	737.740879
RL	R_L	No	Motor resistance	Ohms	2.85	2.85	2.85	2.85	2.85	2.85
T2	T_2	No	Digital tachometer processing update period	Seconds	0.00875	0.00875	0.00875	0.00875	0.00875	0.00875
TAU1 1	T_1	No	Analog tachometer processing time constant for first stage filter	Seconds	0.1	0.1	0.1	0.1	0.1	0.1
TAU2 2	T_2	No	Analog tachometer processing time constant for second stage filter	Seconds	0.1	0.1	0.1	0.1	0.1	0.1

[a] Minimum, not nominal.

[b] SRMS Joint Servo and Gearbox Math Model (ref. 7, p. A–2)

[c] Servo Motor Resistance: Resolution of the Conflicting Data in the PDRS Database (ref. 8) gives the value of motor + MDA resistance as 4.12 ohms

[d] Space Shuttle Remote Manipulator System Design Definition Report (ref. 9, p. 11–4)

[e] Simulation Plan and Procedure for Delta Phase V SRMS Verification and Certification (ref. 10, p. C–2)

TABLE A.1.6–1.–SERVO PARAMETERS (Concluded)

Mnemonic	Symbol	Critical parameter (yes/no)	Description	Units	Joint					
					Shoulder yaw	Shoulder pitch	Elbow pitch	Wrist pitch	Wrist yaw	Wrist roll
TAUF	τ_F	No	Rate loop filter time constant	Seconds	0.1	0.1	0.1	0.1	0.17	0.1
TAUM	τ_M	No	Motor electrical time constant	Seconds	0.001	0.001	0.001	0.001	0.001	0.001
TB	T_S	Yes	Back drive motor current (15/15) limit	Amps	2.57	2.57	2.57	1.95	1.95	1.95
TBIAS	T_{BIAS}	No	Tachometer bias	Counts	–1	–1	–1	–1	–1	–1
TBR	T_{BR}	Yes	Motor section + brake torque (motor side)	Foot–pounds	0.3268	0.3268	0.3268	0.2656	0.2656	0.2656
TDELTA	T_Δ	No	Gearbox torque at the backlash half–angle (as seen from the motor side)	Foot–pounds	0.16965	0.20347	0.20075	0.32098	0.32055	0.32098
TF	T_f	No	Forward drive motor current (15/15/ limit	Amps	4.53	4.53	4.53	3.43	3.43	3.43
TLS	T_{LS}	Yes	Stiction torque (on the joint side)	Foot–pounds	40.53	37.92	27.40	15.86	15.88	15.86
TMC	T_{MC}	Yes	Motor friction torque	Foot–pounds	0.0208	0.0208	0.0208	0.0208	0.0208	0.0208
TMS	T_{MS}	Yes	Motor stiction torque	Foot–pounds	0.0208	0.0208	0.0208	0.0208	0.0208	0.0208

[a] Minimum, not nominal.

[b] SRMS Joint Servo and Gearbox Math Model (ref. 7, p. A–2)

[c] Servo Motor Resistance: Resolution of the Conflicting Data in the PDRS Database (ref. 8) gives the value of motor + MDA resistance as 4.12 ohms

[d] Space Shuttle Remote Manipulator System Design Definition Report (ref. 9, p. 11–4)

[e] Simulation Plan and Procedure for Delta Phase V SRMS Verification and Certification (ref. 10, p. C–2)

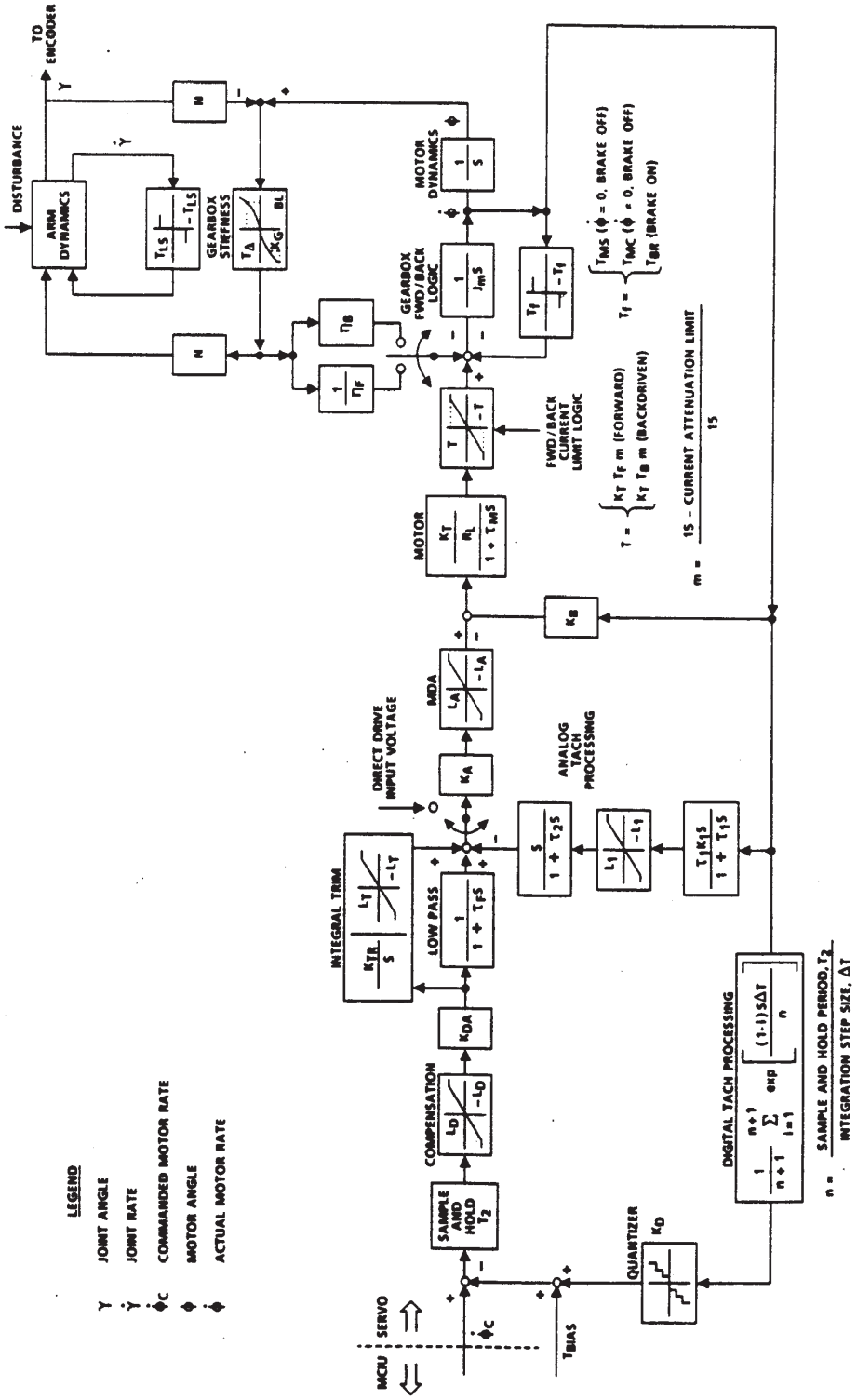

Figure A.1.6–1.– Block diagram for SRMS joint servo.

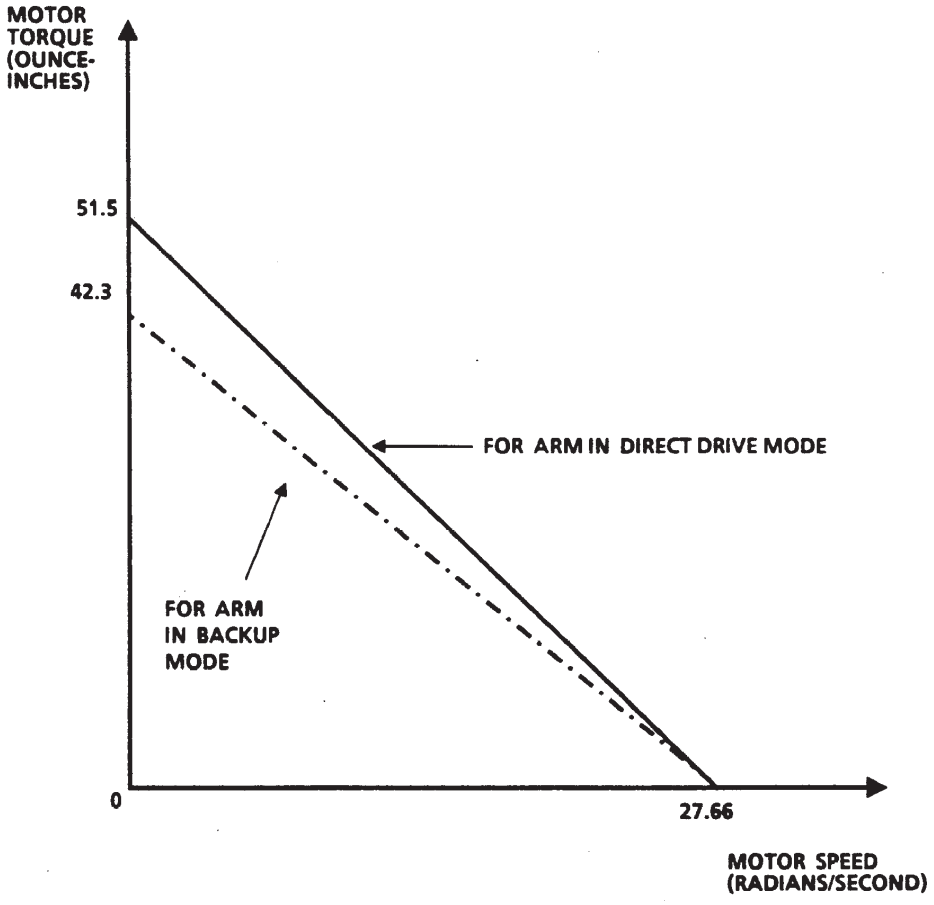

Figure A1.6–2.– Motor torque – speed characteristics for arm in direct drive and backup modes.

the servo so that at steady state the motor rate is the same as its command, are computed from the following expressions:

$$K1 = K_D \frac{K_B}{K_A K_{DA}}$$

$$K2 = \frac{L_T}{K_{DA}} - \frac{R_L}{K_T K_{DA} K_A}\left[T_{MC} + \frac{\tau_{LS}}{N_\eta F}\right]$$

$$L = \frac{1}{K_B}\left[L_T K_A - \frac{R_L}{R_T}\left[T_{MC} + \frac{\tau_{LS}}{N_\eta F}\right]\right]$$

Therefor, using the values of the servo parameters in table A.1.6–1 results in:

$$K1 = 12.136 \text{ counts/rad/sec}$$

$$K2 = 6.7567 \text{ counts}$$

$$L = 8.86 \text{ rad/sec}$$

which differ from what are currently in use. The values of K1(K1_SF_PORT), K2(K2_SF_PORT), and L(MOTOR_SPEED_THRESHOLD_PORT) from table A.1.7–1(b) should be used in simulations.

The tachometer bias, TBIAS, models the error in reading motor shaft speed. This was measured for a motor at rest. Flight data indicates that a similar error exists for a rotating shaft and that it can affect the response when the servos are given small rate commands. The baselined tachometer bias model is to represent the bias as a constant value. This value is included in table A.1.6–1.

A.1.7 CONTROL SOFTWARE PARAMETERS

For SRMS dynamics and control simulations the preceding subsections have provided sufficient data for the SRMS dynamics math models and SRMS servos. For completeness the SRMS control software parameters are presented in table A.1.7–1. The following types of parameters are not included in table A.1.7–1:

1. Input/output from the Display and Control (D&C) Panel (e.g., hand controller outputs, mode indicator, and annunciation/light)

2. Flags (e.g., brakes on, PL capture, and system health)

3. Temperature monitor

4. Data format (for transmission between the Manipulator Controller Interface Unit (MCIU) and other subsystems) and processing

Part 1 of table A.1.7–1 contains the SRMS design constants, and part 2 contains the Level C parameters. The descriptions of some parameters are changed slightly (e.g., MPM_PORT_STR) to properly describe them. Figure A.1.7–1 (cf. figure A.1.3–1) defines the arm segment lengths.

TABLE A.1.7–1.– CONTROL SOFTWARE PARAMETERS

(a) SRMS design constants

HAL_NAME	Value	Units	Description
BELOW_THRESHOLD	11.37778	Seconds/radian	Scaling factor below motor speed threshold
COARSE_LIMIT	15	General Purpose Computer (GPC) cycles	Counter limit (coarse used in single control function)
DELTA	1.369	Degrees	Arc–tangent of (EL_OFF-SET/L_SHP_ELP)
EL_OFFSET	0.5	Feet	Elbow offset
EPSILON	1.237	Degrees	Arc–tangent of (EL_OFF-SET/L_ELP_WP)
EVMAX	4	GPC cycles	Number of GPC cycles for out of tolerance filtering for envelope consistency check
INTEGRAL_RUN_LIMIT	125	MCIU cycles	Rest period for tachometer integral (encoder check)
JOINT_CF_PHF	0.0831 0.0831 0.121 0.207 0.207 0.207	1/second	Joint conversion factor (position hold mode)
L_ELP_WP	277.95/12	Feet	Length from elbow joint to wrist pitch joint
L_MPM_SWOUT	2.25/12	Feet	Length from longeron attach point to swing–out joint
L_SHP_ELP	251.05/12	Feet	Length from shoulder pitch joint to elbow joint
L_SHY_SHP	23/0.12	Feet	Length between shoulder yaw and shoulder pitch joints
L_SWOUT_SHY	11.49/12	Feet	Length from swing–out joint to shoulder yaw joint
L_WP_WY	18./12	Feet	Length from wrist pitch to wrist yaw joint
L_WR_EEAP	12.88/12	Feet	Length from wrist roll joint to EE attach joint
L_WY_WR	21.62/12	Feet	Length from wrist yaw joint to wrist roll joint

TABLE A.1.7–1.– CONTROL SOFTWARE PARAMETERS (Continued)

(a) SRMS design constants (concluded)

HAL_NAME	Value	Units	Description
LOW_JNT_LMT	–175.4 –140.4 2.4 –114.4 –114.6 –440.	Degrees	Lower joint angle limits (for REACH LIMIT annunciation)
LOW_SFTWR_LMT	–177.4 –142.4 0.4 –116.4 –116.6 –442.0	Degrees	Lower joint angle limits (for SOFTWARE STOP computation)
MCIU_INTERVAL	0.042	Seconds	MCIU interval processing cycle time
SH_PROX_TOL	3.0	Feet	Shoulder singularity proximity tolerance
SPD_TOL	0.087	Radians/second	Window for offset zero in rate envelope consistency computation
SWOUT_COS_PORT	0.9427579	None	Cosine of (port swing–out joint angle)
SWOUT_SIN_PORT	0.3334778	None	Sine of (port swing–out joint angle)
UP_JNT_LMT	175.4 –2.4 155.6 114.4 114.6 440.0	Degrees	Upper joint angle limits (for REACH LIMIT annunciation)
UP_SFTWR_LMT	177.4 –0.6 157.6 116.4 116.6 442.0	Degrees	Upper joint angle limits (for SOFTWARE STOP annunciation)
VERNIER_LIMIT	10	GPC cycles	Counter limit – vernier used in single control function
W_PROX_TOL	15.0	Degrees	Wrist singularity proximity tolerance
WR_TO_EE_ANGLE_PORT	–19.48	Degrees	Port arm – rotation angle wrist roll frame to EE frame
WR_TO_EE_ANGLE_STRBD	19.48	Degrees	Starboard arm – rotation angle wrist roll frame to EE frame

TABLE A.1.7–1.– CONTROL SOFTWARE PARAMETERS (Continued)

(b) SRMS Level C Parameters

HAL_NAME	Value	Units	Description
CHK_2_THRSH	0.7	Radians/second	Position encoder check rate threshold
DIST_FLYBY	12.0	Inches	Flyby distance tolerance
DIST_HOLD	0.5	Inches	Position hold distance tolerance
DIST_WASHOUT	24.0	Inches	Washout distance tolerance
ENCODER_TACHO_ ERROR_LIMIT	1.0	Degrees	Maximum permissible discrepancy between encoder angle and tachometer integral for position encoder check
JRL_PL_COARSE	PL dependent	Degrees	Joint rate limit – coarse
JRL_PL_VERNIER	PL dependent	Degrees	Joint rate limit – vernier
K1_SF_PORT	12.0948	Seconds/radian	Port arm command scaling factor K1
K1_SF_STRBD	12.0948	Seconds/radian	Starboard arm command scaling-factor K1
K2_SF_PORT	1.781509	None	Port arm command scaling factor K2
K2_SF_STRBD	1.781509	None	Starboard arm command scaling-factor K2
L_EEAP_EET	1.792	Feet	Length from EE attachment point to EE tip
MAX_CURRENT_ATTEN	14	None	Maximum current attenuation
MIN_TRANS_RATE	0.00716	Feet/second	Minimum translation rate
MODE_CHG_THRESH	0.05	Degrees/second	Joint rate threshold value required for changing modes
MOTOR_SPEED_ THRESHOLD_PORT	2.485357	Radians/second	Port arm motor speed threshold
MOTOR_SPEED_ THRESHOLD_STRBD	2.485357	Radians/second	Starboard arm motor speed threshold
MPM_PORT_STR	679.5/12 –96.5/12 410.0/12	Feet	Location of port arm longeron attach point in Orbiter structural frame
MPM_STRBD_STR	679.5/12 96.5/12 410.0/12	Feet	Location of starboard arm longeron attach point in Orbiter structural frame
PE_2_COUNT	238	MCIU cycles	Maximum count in position encoder check
PHI_FLYBY	3.0	Degrees	Flyby angle tolerance
PHI_HOLD	0.5	Degrees	Position hold angle tolerance
PHI_WASHOUT	5.5	Degrees	Washout angle tolerance

TABLE A.1.7–1.– CONTROL SOFTWARE PARAMETERS (Continued)

(b) SRMS Level C Parameters (continued)

HAL_NAME	Value	Units	Description
PL_TO_EE_OP_SEL	PL dependent	None	Rotation matrix from PL operating frame to EE operating frame
PORT_ATTH_PT_DPLY	679.5 –100.33 423.08	Inches	Port arm shoulder yaw joint location in Orbiter structural frame when deployed
PORT_ATTH_PT_STOW	679.5 –94.13 423.49	Inches	Port arm shoulder yaw joint location in OSR when stowed
PORT_CMB_BIAS	–1.0	None	Bias for port arm rate commands
PORT_JOINT_ATTEN_ LIMIT	0 to 15	None	Port arm current attenuation limit
PORT_JOINT_BIAS	Arm dependent	Degrees	Bias for port arm joint encoders
PREPROG_AUTO_SEQ_ DATA	Mission dependent	Inches, degrees	Preprogramed automatic sequence data
PREPROG_DATA_PAUSE	Mission dependent	None	Preprogrammed automatic sequence data
RHC_BIAS	0	None	Rotational Hand Controller (RHC) bias
RHC_MAX_DEFLECT	93	None	RHC maximum deflection
SEL_PL_CYCLE_ DIVERGENCE_FACTOR	PL dependent	Degrees/MCIU cycle	Allowable MCIU cycle divergence for tachometer consistency check
SEL_PL_ENVELOPE_ DECAY_RATE	0.5	Radians/second/ MCIU cycle	Allowable envelope decay rate
SEL_PL_MAX_ANGLE_ DISPL	0.5 (coarse) 0.2 (vernier)	Degrees	Allowable elapsed angular displacement for tachometer consistency check
SEL_PL_NONZERO_ CMD_OFFSET	PL dependent	Radians/second	Envelope command offset for non-zero command
SEL_PL_ROT_AUTO_ VERN	PL dependent	Degrees/second	Maximum Point of Resolution (POR) rotation rate in auto mode – vernier
SEL_PL_ROT_RATE_ COARSE	PL dependent	Degrees/second	Maximum POR rotation rate– coarse
SEL_PL_ROT_RATE_ COARSE_COM	PL dependent	Degrees/second	Maximum POR rotation rate – coarse (component)
SEL_PL_ROT_RATE_ VERN_COM	PL dependent	Degrees/second	Maximum POR rotation rate – vernier (component)
SEL_PL_ROT_RATE_ VERNIER	PL dependent	Degrees/second	Maximum POR rotation rate – vernier

TABLE A.1.7–1.– CONTROL SOFTWARE PARAMETERS (Concluded)

(b) SRMS Level C Parameters (concluded)

HAL_NAME	Value	Units	Description
SEL_PL_TRANS_AUTO_ VERN	PL dependent	Feet/second	Maximum POR translation rate in auto mode – vernier
SEL_PL_TRANS_RATE_ COARSE	PL dependent	Feet/second	Maximum POR translation rate – coarse
SEL_PL_TRANS_RATE_ COARSE_COM	PL dependent	Feet/second	Maximum POR translation rate – coarse (component)
SEL_PL_TRANS_RATE_ VERNIER	PL dependent	Feet/second	Maximum POR translation rate – vernier
SEL_PL_ZERO_CMD_ OFFSET	PL dependent	Radians/second	Envelope command offset for zero command
SEQ_HEAD	Mission dependent	None	Preprogrammed automaticse-quence attributes
STRBD_ATTH_PT_DPLY	679.50 100.33 423.08	Inches	Starboard arm shoulder yaw joint location in Orbiter structural frame
STRBD_ATTH_PT_STOW	679.50 94.13 423.49	Inches	Starboard arm shoulder joint loca-tion in OSR when stowed
STRBD_CMD_BIAS	–1.0	None	Bias for starboard arm rate com-mands
STRBD_JOINT_ATTEN_ LIMIT	0 to 15	None	Starboard arm current attenuation limit
STRBD_JOINT_BIAS	Arm dependent	Degrees	Bias for starboard arm joint encod-ers
TACH_GAIN	1	None	Tachometer filter gain constant
TACH_TIME_CONSTANT	5	MCIU cycles	Tachometer filter gain constant
THC_BIAS	0	None	Translational Hand Controller (THC) bias
THC_MAX_DEFLECT	93	None	THC maximum deflection
V_EE_POR_SEL	PL dependent	Feet	Vector from EE tip to POR in PL operating frame
SEL_JOINT_SLIP_ANGLE	0.5	Degrees	Joint dependent joint slip tolerance values
TOTAL_JOINT_SLIP_ ANGLE	2.0	Degrees	Joint slip tolerance value for sum of all joints

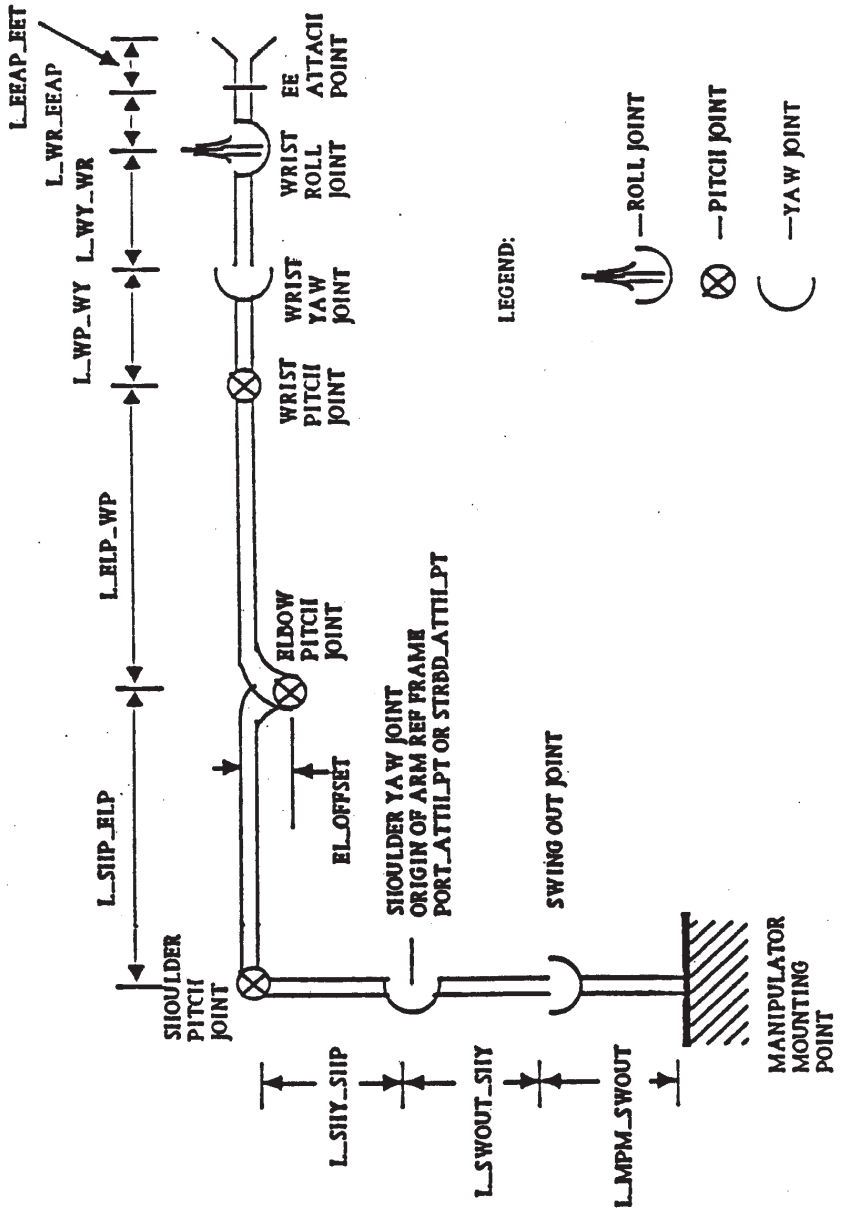

Figure A.1.7–1.–Arm model (used in ref.3)

A.1.8 OFF–NOMINAL ARM PARAMETER SETS

A.1.8.1 PARAMETER SETS

The SRMS parameters presented in the preceding subsections can be divided into two groups: servo parameters and arm geometry/mass properties. The arm geometry and mass properties parameters have not been measured; they also have been considered noncritical parameters in the sense that their variations do not affect the arm performance significantly. Therefore, their numerical values have been set at nominal values, as shown in subsections 1.3, 1.4, and 1.5. Among the servo parameters, only the gearbox stiffness, gearbox forward/back drive efficiencies, MDA gain, forward/back drive current limits, joint and motor friction/stiction, and brake torque are considered as critical parameters. As a result, in nonmeasured, off–nominal parameter sets, only these critical parameters would have different values.

Based on the above discussion, it is logical to present the SRMS parameter sets in the following order:

1. Off–nominal parameter sets

2. Design, Development, Test, and Evaluation (DDT&E) parameter set (containing measured values)

In order to have a concise presentation, only those parameters that have non–nominal values will be shown in the tables of off–nominal parameters and DDT&E parameters; those that are not shown have nominal values.

A.1.8.2 DEFINITIONS

1. Nominal – As designed.

2. Off–nominal – Different from nominal; based on either actual measurements or tolerances for manufacture. Therefore, there are quite a few off–nominal parameter sets, and each set is given a unique Identification (ID). Originally, the off–nominal parameter sets were set up during the SRMS verification simulations to show that the arm performance could satisfy its requirements, even under the worst–case conditions (see table A.1.8–1). Later on, based on measurements, the off–nominal DDT&E set was added and usedvalidate the simulations against flight data.

TABLE A.1.8–1.– PARAMETER COMBINATION SETTINGS[a]

Parameter	Combination loads									
	1A	1B	1B LOADS	1C	2A	2B	3A	3B	4A	4A MOTION
Gearbox efficiency	LO	HI	HI	HI	HI	LO	HI	LO	HI	HI
Servo outer loop gain	LO	HI	HI	(b)	LO	HI	–	–	HI	HI
Integral trim limit	LO	HI	HI	(b)	LO	HI	–	–	HI	HI
Current limits	LO	HI	HI	(b)	LO	HI	–	–	HI	HI
Joint drive friction	HI	LO	LO	LO	LO	HI	LO	HI	LO	LO
Motor friction	HI	LO	LO	LO	LO	HI	LO	HI	LO	LO
Brake slip torque[c]	–	–	–	–	–	–	LO	HI	LO	VERY LO
Gearbox full range stiffness	LO	LO	HI	LO	LO	LO	LO	LO	LO	LO

[a]Abbreviations used in this table: HI – high, LO – low.

[b]HI for shoulder and wrist roll joints; LO for elbow, wrist pitch, and yaw joints.

[c]Add motor friction for equivalence to brake torque, TBR, in nominal parameter section.

3. Delta (Greek delta symbol) – Variation from the nominal value. The maximum and minimum values are given as nominal +/– delta, respectively.

4. Measured values – Values based on actual measurements (i.e., test data). Exception: The time constants in the analog tachometer loop, based on ”selecton test” resistors, are considered as measured data although there were no tests set up to measure them. The gearbox stiffness characteristics derived from downlisted flight data can be considered as measured data.

A.1.8.3 OFF–NOMINAL PARAMETER SETS

There are 10 off–nominal parameter sets known as 1A, 1B, 1B LOADS, 1C, 2A, 2B, 3A, 3B, 4A, and 4A MOTION. Table A.1.8–2 provides the numerical values for the critical parameters associated with these 10 parameter sets, as well as their statuses (i.e., NOM = nominal, HI = high, LO = low, MR HI = more reasonably high, MR LO = more reasonably low, VERY LO = very low; all with comparison to the nominal values.)

Based on the settings of the off–nominal parameter values, the following system characteristics can be expected.

Parameter set	System characteristics
1A	Sluggish response (low drive torque and speed)
1B	Rapid response (high drive torque and speed)
1B LOADS	Rapid response, high joint torques (stiff gearbox)
1C	Same as in 1B for shoulder and wrist roll joints; same as in 2A for elbow and wrist pitch/yaw joints
2A	Low back drive resistance
2B	High back drive resistance
3A	Low joint/motor friction, weak brakes
3B	High joint/motor friction, strong brakes
4A	Same as in 1B, but longer stopping distance (weaker brakes)
4A MOTION	Same as in 4A, but 90 percent minimum brake torque

The first eight off–nominal sets have been used by SPAR Aerospace in their SRMS verification simulations prior to STS flights. The ninth parameter set (i.e., 4A) has been used in Lyndon B. Johnson Space Center (JSC) consistency check validation simulations. For more information, see the Summary of RMS Consistency Check Validation in JSC SAIL and at SPAR Aerospace. SPAR Aerospace, however, used parameter set 1B in their consistency check simulation studies.

A.3.1.8–2.– OFF–NOMINAL PARAMETER SETS

(a) Sets 1A, 1B, 1B LOADS, and 1C[a]

Parameter	Joint	Set 1A		Set 1B		Set 1B LOADS		Set 1C	
		Value	Status	Value	Status	Value	Status	Value	Status
Gearbox forward efficiency, ETAF (no units)	SY	0.82	LO	0.87	HI	0.87	HI	0.87	HI
	SP	0.76	LO	0.87	HI	0.87	HI	0.87	HI
	EP	0.74	LO	0.94	HI	0.94	HI	0.94	HI
	WP	0.75	LO	0.96	HI	0.96	HI	0.96	HI
	WY	0.75	LO	0.96	HI	0.96	HI	0.96	HI
	WR	0.75	LO	0.96	HI	0.96	HI	0.96	HI
Gearbox back drive efficiency, ETAB (no units)	SY	0.75	LO	0.83	HI	0.83	HI	0.83	HI
	SP	0.75	LO	0.83	HI	0.83	HI	0.83	HI
	EP	0.72	LO	0.84	HI	0.84	HI	0.84	HI
	WP	0.63	LO	0.87	HI	0.87	HI	0.87	HI
	WY	0.63	LO	0.87	HI	0.87	HI	0.87	HI
	WR	0.63	LO	0.87	HI	0.87	HI	0.87	HI
MDA gain, KA (volts/volt)	SY	1.736	MR LO	2.202	MR HI	2.202	MR HI	2.202	MR HI
	SP	1.736	MR LO	2.202	MR HI	2.202	MR HI	2.202	MR HI
	EP	1.736	MR LO	2.202	MR HI	2.202	MR HI	1.736	MR LO
	WP	1.736	MR LO	2.202	MR HI	2.202	MR HI	1.736	MR LO
	WY	1.736	MR LO	2.202	MR HI	2.202	MR HI	1.736	MR LO
	WR	1.736	MR LO	2.202	MR HI	2.202	MR HI	2.202	MR HI
Integral trim limit, LT (volts)	SY	1.3	LO	1.7	HI	1.7	HI	1.7	MR HI
	SP	1.3	LO	1.7	HI	1.7	HI	1.7	MR HI
	EP	1.3	LO	1.7	HI	1.7	HI	1.3	MR LO
	WP	1.3	LO	1.7	HI	1.7	HI	1.3	MR LO
	WY	1.3	LO	1.7	HI	1.7	HI	1.3	MR LO
	WR	1.3	LO	1.7	HI	1.7	HI	1.7	MR HI
Forward motor torque limit[b] (foot–pounds)	SY	0.563	MR LO	0.731	MR HI	0.731	MR HI	0.731	MR HI
	SP	0.600	MR LO	0.731	MR HI	0.731	MR HI	0.731	MR HI
	EP	0.617	MR LO	0.731	MR HI	0.731	MR HI	0.617	MR LO
	WP	0.473	MR LO	0.555	MR HI	0.555	MR HI	0.473	MR LO
	WY	0.473	MR LO	0.555	MR HI	0.555	MR HI	0.473	MR LO
	WR	0.473	MR LO	0.555	MR HI	0.555	MR HI	0.555	MR HI
Back drive motor torque limit[b] (foot–pounds)	SY	0.320	MR LO	0.415	MR HI	0.415	MR HI	0.415	MR HI
	SP	0.341	MR LO	0.415	MR HI	0.415	MR HI	0.415	MR HI
	EP	0.351	MR LO	0.415	MR HI	0.415	MR HI	0.351	MR LO
	WP	0.269	MR LO	0.315	MR HI	0.315	MR HI	0.269	MR LO
	WY	0.269	MR LO	0.315	MR HI	0.315	MR HI	0.269	MR LO
	WR	0.269	MR LO	0.315	MR HI	0.315	MR HI	0.315	MR HI
Joint friction/ stiction, TLS (foot–pounds)	SY	40.53	HI	16.21	LO	16.21	LO	16.21	LO
	SP	37.92	HI	15.17	LO	15.17	LO	15.17	LO
	EP	27.40	HI	10.96	LO	10.96	LO	10.96	LO
	WP	15.86	HI	6.34	LO	6.34	LO	6.34	LO
	WY	15.86	HI	6.35	LO	6.35	LO	6.35	LO
	WR	15.86	HI	6.34	LO	6.34	LO	6.34	LO

[a]Abbreviations used in this table: HI – high, LO – low, MR HI – more reasonably high, MR LO – more reasonably low, NOM – nominal.

[b]13/15ths of full value.

[c]Add motor friction for equivalence to TBR in nominal parameter section.

TABLE A.1.8–2.– OFF–NOMINAL PARAMETER SETS (Continued)

(a) Sets 1A, 1B, 1B LOADS, and 1C[a] (concluded)

Parameter	Joint	Set 1A		Set 1B		Set 1B LOADS		Set 1C	
		Value	Status	Value	Status	Value	Status	Value	Status
Motor friction/ stiction, TMC (foot–pounds)	SY	0.0417	HI	0.0104	LO	0.0104	LO	0.0104	LO
	SP	0.0417	HI	0.0104	LO	0.0104	LO	0.0104	LO
	EP	0.0417	HI	0.0104	LO	0.0104	LO	0.0104	LO
	WP	0.0417	HI	0.0104	LO	0.0104	LO	0.0104	LO
	WY	0.0417	HI	0.0104	LO	0.0104	LO	0.0104	LO
	WR	0.0417	HI	0.0104	LO	0.0104	LO	0.0104	LO
Gearbox linear stiffness, KG (foot–pounds/ radians)	SY	0.24345	LO	0.24345	LO	0.45213	HI	0.24345	LO
	SP	0.43486	LO	0.43486	LO	0.80760	HI	0.43486	LO
	EP	0.83737	LO	0.83737	LO	1.55511	HI	0.83737	LO
	WP	1.35044	LO	1.35044	LO	2.50796	HI	1.35044	LO
	WY	1.35044	LO	1.35044	LO	2.50796	HI	1.35044	LO
	WR	1.35044	LO	1.35044	LO	2.50796	HI	1.35044	LO
Gearbox displacement intercept, BL (radians	SY	2.526	LO	2.526	LO	1.18104	HI	2.526	LO
	SP	2.300	LO	2.300	LO	1.04881	HI	2.300	LO
	EP	1.494	LO	1.494	LO	0.62986	HI	1.494	LO
	WP	1.19886	LO	1.19886	LO	0.64554	HI	1.19886	LO
	WY	1.19886	LO	1.19886	LO	0.64554	HI	1.19886	LO
	WR	1.19886	LO	1.19886	LO	0.64554	HI	1.19886	LO
Gearbox torque intercept, TDELTA (foot–pounds)	SY	0.1697	NOM	0.1697	NOM	0.1697	NOM	0.1697	NOM
	SP	0.2035	NOM	0.2035	NOM	0.2035	NOM	0.2035	NOM
	EP	0.2007	NOM	0.2007	NOM	0.2007	NOM	0.2007	NOM
	WP	0.3210	NOM	0.3210	NOM	0.3210	NOM	0.3210	NOM
	WY	0.3205	NOM	0.3205	NOM	0.3205	NOM	0.3205	NOM
	WR	0.3210	NOM	0.3210	NOM	0.3210	NOM	0.3210	NOM
Brake slip torque[c] (foot–pounds)	SY	0.306	NOM	0.306	NOM	0.306	NOM	0.306	NOM
	SP	0.306	NOM	0.306	NOM	0.306	NOM	0.306	NOM
	EP	0.306	NOM	0.306	NOM	0.306	NOM	0.306	NOM
	WP	0.245	NOM	0.245	NOM	0.245	NOM	0.245	NOM
	WY	0.245	NOM	0.245	NOM	0.245	NOM	0.245	NOM
	WR	0.245	NOM	0.245	NOM	0.245	NOM	0.245	NOM

[a]Abbreviations used in this table: HI – high, LO – low, MR HI – more reasonably high, MR LO – more reasonably low, NOM – nominal.

[b]13/15ths of full value.

[c]Add motor friction for equivalence to TBR in nominal parameter section.

TABLE A.1.8–2.– OFF–NOMINAL PARAMETER SETS (Continued)

(b) Sets 2A, 2B, 3A, 3B, and 4A[a]

Parameter	Joint	Set 2A		Set 2B		Set 3A		Set 3B		Set 4B	
		Value	Status	Value	Status	Value	Status	Value	Status	Value	Status
Gearbox forward efficiency, ETAF (no units)	SY	0.87	HI	0.82	LO	0.87	HI	0.82	LO	0.87	HI
	SP	0.87	HI	0.76	LO	0.87	HI	0.76	LO	0.87	HI
	EP	0.94	HI	0.74	LO	0.94	HI	0.74	LO	0.94	HI
	WP	0.96	HI	0.75	LO	0.96	HI	0.75	LO	0.96	HI
	WY	0.96	HI	0.75	LO	0.96	HI	0.75	LO	0.96	HI
	WR	0.96	HI	0.75	LO	0.96	HI	0.75	LO	0.96	HI
Gearbox back drive efficiency, ETAB (no units)	SY	0.83	HI	0.75	LO	0.83	HI	0.75	LO	0.83	HI
	SP	0.83	HI	0.75	LO	0.83	HI	0.75	LO	0.83	HI
	EP	0.84	HI	0.72	LO	0.84	HI	0.72	LO	0.84	HI
	WP	0.87	HI	0.63	LO	0.87	HI	0.63	LO	0.87	HI
	WY	0.87	HI	0.63	LO	0.87	HI	0.63	LO	0.87	HI
	WR	0.87	HI	0.63	LO	0.87	HI	0.63	LO	0.87	HI
MDA gain, KA (volts/volt)	SY	1.736	MR LO	2.202	MR HI	1.92	NOM	1.92	NOM	2.202	MR HI
	SP	1.736	MR LO	2.202	MR HI	1.92	NOM	1.92	NOM	2.202	MR HI
	EP	1.736	MR LO	2.202	MR HI	1.92	NOM	1.92	NOM	2.202	MR HI
	WP	1.736	MR LO	2.202	MR HI	1.92	NOM	1.92	NOM	2.202	MR HI
	WY	1.736	MR LO	2.202	MR HI	1.92	NOM	1.92	NOM	2.202	MR HI
	WR	1.736	MR LO	2.202	MR HI	1.92	NOM	1.92	NOM	2.202	MR HI
Integral trim limit, LT (volts)	SY	1.3	LO	1.7	HI	1.5	NOM	1.5	NOM	1.7	HI
	SP	1.3	LO	1.7	HI	1.5	NOM	1.5	NOM	1.7	HI
	EP	1.3	LO	1.7	HI	1.5	NOM	1.5	NOM	1.7	HI
	WP	1.3	LO	1.7	HI	1.5	NOM	1.5	NOM	1.7	HI
	WY	1.3	LO	1.7	HI	1.5	NOM	1.5	NOM	1.7	HI
	WR	1.3	LO	1.7	HI	1.5	NOM	1.5	NOM	1.7	HI
Forward motor torque limit[b] (foot–pounds)	SY	0.563	MR LO	0.731	MR HI	0.647	NOM	0.647	NOM	0.731	MR HI
	SP	0.600	MR LO	0.731	MR HI	0.647	NOM	0.647	NOM	0.731	MR HI
	EP	0.617	MR LO	0.731	MR HI	0.647	NOM	0.647	NOM	0.731	MR HI
	WP	0.473	MR LO	0.555	MR HI	0.491	NOM	0.491	NOM	0.555	MR HI
	WY	0.473	MR LO	0.555	MR HI	0.491	NOM	0.491	NOM	0.555	MR HI
	WR	0.473	MR LO	0.555	MR HI	0.491	NOM	0.491	NOM	0.555	MR HI
Back drive motor torque limit[b] (foot–pounds)	SY	0.320	MR LO	0.415	MR HI	0.367	NOM	0.367	NOM	0.415	MR HI
	SP	0.341	MR LO	0.415	MR HI	0.367	NOM	0.367	NOM	0.415	MR HI
	EP	0.351	MR LO	0.415	MR HI	0.367	NOM	0.367	NOM	0.415	MR HI
	WP	0.269	MR LO	0.315	MR HI	0.278	NOM	0.278	NOM	0.315	MR HI
	WY	0.269	MR LO	0.315	MR HI	0.278	NOM	0.278	NOM	0.315	MR HI
	WR	0.269	MR LO	0.315	MR HI	0.278	NOM	0.278	NOM	0.315	MR HI
Joint friction/ stiction, TLS (foot–pounds)	SY	16.21	LO	40.53	HI	16.21	LO	40.53	HI	16.21	LO
	SP	15.17	LO	37.92	HI	15.17	LO	37.92	HI	15.17	LO
	EP	10.96	LO	27.40	HI	10.96	LO	27.40	HI	10.96	LO
	WP	6.34	LO	15.86	HI	6.34	LO	15.86	HI	6.34	LO
	WY	6.35	LO	15.88	HI	6.35	LO	15.88	HI	6.35	LO
	WR	6.34	LO	15.86	HI	6.34	LO	15.86	HI	6.34	LO

[a]Abbreviations used in this table: HI – high, LO – low, MR HI – more reasonably high, MR LO – more reasonably low, NOM – nominal.

[b]13/15ths of full value.

[c]Add motor friction for equivalence to TBR in nominal parameter section.

TABLE A.1.8–2.– OFF–NOMINAL PARAMETER SETS (Concluded)

(b) Sets 2A, 2B, 3A, 3B, and 4A[a] (concluded)

Parameter	Joint	Set 2A		Set 2B		Set 3A		Set 3B		Set 4A	
		Value	Status	Value	Status	Value	Status	Value	Status	Value	Status
Motor friction/ stiction, TMC (foot–pounds)	SY	0.0104	LO	0.0417	HI	0.0104	LO	0.0417	HI	0.0104	LO
	SP	0.0104	LO	0.0417	HI	0.0104	LO	0.0417	HI	0.0104	LO
	EP	0.0104	LO	0.0417	HI	0.0104	LO	0.0417	HI	0.0104	LO
	WP	0.0104	LO	0.0417	HI	0.0104	LO	0.0417	HI	0.0104	LO
	WY	0.0104	LO	0.0417	HI	0.0104	LO	0.0417	HI	0.0104	LO
	WR	0.0104	LO	0.0417	HI	0.0104	LO	0.0417	HI	0.0104	LO
Gearbox linear stiffness, KG (foot–pounds/ radians)	SY	0.24345	LO	0.24345	LO	0.24345	LO	0.24345	LO	0.24345	LO
	SP	0.43486	LO	0.43486	LO	0.43486	LO	0.43486	LO	0.43486	LO
	EP	0.83737	LO	0.83737	LO	0.83737	LO	0.83737	LO	0.83737	LO
	WP	1.35044	LO	1.35044	LO	1.35044	LO	1.35044	LO	1.35044	LO
	WY	1.35044	LO	1.35044	LO	1.35044	LO	1.35044	LO	1.35044	LO
	WR	1.35044	LO	1.35044	LO	1.35044	LO	1.35044	LO	1.35044	LO
Gearbox displacement intercept, BL (radians	SY	2.526	LO	2.526	LO	2.526	LO	2.526	LO	2.526	LO
	SP	2.300	LO	2.300	LO	2.300	LO	2.300	LO	2.300	LO
	EP	1.494	LO	1.494	LO	1.494	LO	1.494	LO	1.494	LO
	WP	1.19886	LO	1.19886	LO	1.19886	LO	1.19886	LO	1.19886	LO
	WY	1.19886	LO	1.19886	LO	1.19886	LO	1.19886	LO	1.19886	LO
	WR	1.19886	LO	1.19886	LO	1.19886	LO	1.19886	LO	1.19886	LO
Gearbox torque intercept, TDELTA (foot–pounds)	SY	0.1697	NOM	0.1697	NOM	0.1697	NOM	0.1697	NOM	0.1697	NOM
	SP	0.2035	NOM	0.2035	NOM	0.2035	NOM	0.2035	NOM	0.2035	NOM
	EP	0.2007	NOM	0.2007	NOM	0.2007	NOM	0.2007	NOM	0.2007	NOM
	WP	0.3210	NOM	0.3210	NOM	0.3210	NOM	0.3210	NOM	0.3210	NOM
	WY	0.3205	NOM	0.3205	NOM	0.3205	NOM	0.3205	NOM	0.3205	NOM
	WR	0.3210	NOM	0.3210	NOM	0.3210	NOM	0.3210	NOM	0.3210	NOM
Brake slip torque[c] (foot–pounds)	SY	0.306	NOM	0.306	NOM	0.260	LO	0.375	HI	0.260	LO
	SP	0.306	NOM	0.306	NOM	0.260	LO	0.375	HI	0.260	LO
	EP	0.306	NOM	0.306	NOM	0.260	LO	0.375	HI	0.260	LO
	WP	0.245	NOM	0.245	NOM	0.208	LO	0.302	HI	0.208	LO
	WY	0.245	NOM	0.245	NOM	0.208	LO	0.302	HI	0.208	LO
	WR	0.245	NOM	0.245	NOM	0.208	LO	0.302	HI	0.208	LO

[a]Abbreviations used in this table: HI – high, LO – low, MR HI – more reasonably high, MR LO – more reasonably low, NOM – nominal.

[b]13/15ths of full value.

[c]Add motor friction for equivalence to TBR in nominal parameter section.

A.1.8.4 DDT&E PARAMETER SET

The DDT&E parameter set was presented by SPAR Aerospace at the simulation validation meeting at JSC on July 31, 1985, in response to the request to establish a set of measured values for the DDT&E arm so that actual parameter values could be used in the simulators to improve their ability to match flight data. Table A.1.8–3 presents the DDT&E parameter set; the Remarks column contains the source of the measurements.

A.1.8.5 SELECTION OF PARAMETER SETS FOR SIMULATIONS

Different parameter sets are to be used depending on the simulation objective an indicated in table A.1.8–4. As an example, for typical arm performance study, the nominal parameter set should be used since the mean of parameter values is likely to be close to the nominal values.

For a performance study of a particular arm (e.g., the DDT&E arm that was flown in many STS flights), it is logically desirable to use its measured values. Unfortunately, not all parameters are measured, as is clear from table A.1.8–3 for the DDT&E parameter set. For those parameters that are not measured, their nominal values can be used, because their actual values are normally closer to the nominal values than they are to the maximum or minimumvalues.

For off–nominal arm performance simulations, different off–nominal parameter sets can be used depending on the scenarios set up for the simulations (e.g., high fric– tion, weak motor, and low brake torque). These off–nominal parameter values can be assumed to exist simultaneously at all six joints (as in most off–nominal parameter sets) or different combinations of nominal–high–low can be assumed for different joints (as in parameter set 1C). Table A.1.8–4 only shows the uses of off–nominal parameters that have been studied at SPAR Aerospace; the list of off–nominal parameter sets in table A.1.8–4 can, in fact, be extended to suit the purpose of a given simulation. Table A.1.8–5 shows the malfunctions that have been simulated in an SRMS real–time Simulation Facility (SIMFAC) at SPAR Aerospace using various off–nominal parameter sets.

TABLE A.1.8–3.– DDT&E PARAMETERS

Math model name	Units	Value	Description	Remarks
JM	Slug–feet^2	4.158 E – 5 4.229 E – 5 4.303 E – 5 4.105 E – 5 4.105 E – 5 4.298 E – 5	Moment of inertia of rotor about the motor shaft axis (new definition) Arranged in the order of SY, SP, EP, WP, WY, and WR joints	Sperry EIDP
KA	Volts/volt	1.91 1.97 1.89 1.92 1.88 1.88	MDA gain Arranged in the order of SY, SP, EP, WP, WY, and WR joints	SPAR EIDP
KB	Volts/radian/ second	0.2344 0.2355 0.2376 0.232 0.2365 0.2365	Motor back EMF gain Arranged in the order of SY, SP, EP, WP, WY, and WR joints	
KDA	Volts/count	0.1677 0.1666 0.1678 0.1671 0.1683	D/A converter gain Arranged in the order of SY, SP, EP, WP, WY, and WR joints	

[a]EIDP – End Item Data Package.

[b]Use nominal value.

TABLE A.1.8–3.– DDT&E PARAMETERS (Continued)

Math model name	Units	Value	Description	Remarks
KT	Foot–pounds/ amp	0.173 0.1743 0.1758 0.172 0.175 0.175	Motor torquing gain Arranged in the order of SY, SP, EP, WP, WY, and WR joints	
RM	Ohms	2.846 2.74 2.72 2.78 2.73 2.893	Motor resistance Arranged in the order of SY, SP, EP, WP, WY, and WR joints	
RS	Ohms	1.03 1.14 1.13 1.13 1.13 1.15	Source resistance Arranged in the order of SY, SP, EP, WP, WY, and WR joints	
TB	Amps	2.45 2.60 2.64 1.97 1.99 1.99	Back drive motor current (15/15) limit Arranged in the order of SY, SP, EP, WP, WY, and WR joints	

[a]EIDP – End Item Data Package.

[b]Use nominal value.

TABLE A.1.8–3.– DDT&E PARAMETERS (Concluded)

Math model name	Units	Value	Description	Remarks
TBR	Foot–pounds	0.3777 0.3343 0.3152 0.2859 0.2662 0.2637	Stiction + brake torque (motor side) measured at motor rate = 5 rad/sec Arranged in the order of SY, SP, EP, WP, WY, and WR joints	MAS/S Joint Motor Module AcceptanceTest Procedure (ATP)
TF	Amps	4.36 4.45 4.57 3.41 3.46 3.46	Forward drive motor current (15/15) limit Arranged in the order of SY, SP, EP, WP, WY, and WR joints	
TLS	Foot–pounds	45.19 42.08 9.86 19.78 20.63 (b)	Stiction torque (on the joint side) Arranged in the order of SY, SP, EP, WP, WY, and WR joints	Shoulder Shop Replaceable Unit (SRU) Ambient, Replaceable Unit (SRU) Ambient, and SPAR–ATP.218
TMC	Foot–pounds	0.0262 0.0122 0.0286 0.0166 0.0149 0.0214	Friction torque (on the motor side) Arranged in the order of SY, SP, EP, WP, WY, and WR joints	
TMS	Foot–pounds	0.0262 0.0122 0.0286 0.0166 0.0149 0.0214	Stiction torque (on the motor side) Arranged in the order of SY, SP, EP, WP, WY, and WR joints	
TAU12	Seconds	0.115 0.115 0.115 0.127 0.133 0.14	Analog tachometer processing time constant for the second stage filter Arranged in the order of SY, SP, EP, WP, WY, and WR joints	Not measured but computed from select–on–test resistors
T2	Seconds	0.00878	Digital tachometer processing update period	

[a]EIDP – End Item Data Package.

[b]Use nominal value.

TABLE A.1.8–4.– SELECTION OF PARAMETER SETS FOR SIMULATION

Simulation objective	Parameter set											
	Nominal	DDT&E	1A	1B	1B LOADS	1C	2A	2B	3A	3B	4A	4A MOTION
Generic arm performance												
o Typical arm response	X											
o SRMS redesign	X											
o Heavy PL handling	X											
o Simulation–to–simulation validation	X											
Simulation–to–flight validation (only when DDT&E arm is used in the flight)		X										
SRMS performance verification												
o Nominal performance	X											
o Force/torque capability position hold accuracy												
o Acceleration loads, uncommanded motion				X								
o High drive axis loads					X							
o Mixed joint characteristics, uncommanded motion						X						
o Stopping distance due to zero rate commands							X					
o Deceleration loads								X				
o Stopping distance due to braking									X			
o Loads due to braking										X		
Malfunction simulations												
o Consistency check validation												
– With nominal brakes				X								
– With low brake torques												X
o Joint runaway				X								X
o See table A.1.8.5												
Off–nominal arm performance			X	X		X	X	X	X	X	X	X

TABLE A.1.8–5.– PARAMETER SETS USED IN SIMFAC MALFUNCTION SIMULATIONS

FMEA[a] no.	Description	Parameter sets						
		1A	1B	1C	2A	2B	3A	3B
1360	Hard–over THC command in one axis	X					X	
1370	Uncommanded THC output in one or more axis		X	X				X
1460	Uncommanded RHC output in any axis	X	X					
1470	Uncommanded RHC output in all axes	X						
1850	Loss of clock pulse to Arm Based Electronics (ABE)		X					
1860	Loss of pulses on frame sync	X				X	X	X
1970	No output or erroneous analog output from multiplexer	X						
2540	Analog output from tachometer electronics to MDA fails higher than commanded	X	X					
2580	Loss of output to 16–bit latch			X	X			X
2620	Loss of or incorrect tachometer feedback to servo and MCIU	X		X	X		X	X
2630	Erroneous digital tachometer output	X	X	X	X	X	X	X
3030	Incorrect output from Pulse Width Modulator (PWM)	X	X	X	X			X
3160	Loss of one or more outputs from shoulder, elbow, or wrist Joint Power Conditioner (JPC)	X						
4030	No encoder output	X	X					
4060	Reduced drive torque		X		X			

[a]FMEA – Failure Modes and Effects Analysis.