SSP 41004

Common Berthing Mechanism to Pressurized Elements Interface Control Document Part 2

International Space Station Program

Revision J
October 25, 2005

esa
european space agency

Japan Aerospace Exploration Agency

agenzia spaziale italiana
(Italian Space Agency)

National Aeronautics and Space Administration
International Space Station Program
Johnson Space Center
Houston, Texas
Contract No. NAS15−10000

REVISION AND HISTORY PAGE

REV.	DESCRIPTION	PUB. DATE
−	BASELINE ISSUE (REFERENCE SSCBD BB003287 EFF. 02−25−92)	02−92
	IRNs 0001 − 0035 (REFERENCE SSCBD BB003287A EFF. 04−03−92)	04−92
	IRN 0036 (REFERENCE SSCBD BB003287B EFF. 07−16−92)	07−92
A	REVISION A (REFERENCE IRN 0037, SSCBD BB003287B EFF. 07−16−92)	07−92
	IRN 0038 (REFERENCE SSCBD BB003287C EFF. 11−13−92)	12−92
	IRNs 0040 − 0046 (REFERENCE SSCBD BB003287C EFF. 11−13−92)	12−92
	IRN 0048 (REFERENCE SSCBD BB003287C EFF. 11−13−92)	12−92
	IRN 0049 (REFERENCE SSCBD BB003287D EFF. 12−18−92)	01−93
B	REVISION B (REFERENCE IRN 0050, SSCBD BB003287D EFF. 12−18−92)	01−93
C	REVISION C (ECP BHE0001)	04−95
D	REVISION D (REFERENCE SSCD 000293 EFF. 05−10−96)	06−12−96
	Note: This is the first release of Part 2. As of this release Part 1 and Part 2 will be tracked separately.	
	INCORPORATING AGREED PIRNS AS FOLLOWS:	
	PIRN 41004−NA−0016a, PIRN 41004−NA−0017a, PIRN 41004−NA−0018a, PIRN 41004−NA−0019, PIRN 41004−NA−0020, PIRN 41004−NA−2001, 41004−NA−2002a, 41004−NA−2003, 41004−NA−2005a, 41004−NA−2006, 41004−NA−2007, 41004−NA−2008, 41004−NA−2010	
E	REVISION E (REFERENCE SSCD 000429, EFF. 11−08−96)	08−12−97
	Correction to Revision D − PIRNS 41004−NA−0015, 41004−NA−0021a were added in Rev D. These PIRNs in Rev D, were just omitted from the Rev/History page.	
	INCORPORATING THE FOLLOWING PIRNS:	
	PIRNs 41004−ES−0002A, 41004−ES−0003A, 41004−ES−0004, 41004−NA−2004,41004−2011D, 41004−NA−2012B, 41004−NA−2013A, 41004−NA−2014C, 41004−NA−2015A, 41004−NA−2016A, 41004−NA−2017, 41004−NA−2018, 41004−NA−2019, 41004−NA−2020A, 41004−NA−2022, 41004−NA−2023, 41004−NA−2024, 41004−NA−2025, 41004−NA−2026A, 41004−NA−2027A, 41004−NA−2028C, 41004−NA−2032B, 41004−ND−0001B, 41004−ND−0002A	

REVISION AND HISTORY PAGE − CONTINUED

REV.	DESCRIPTION	PUB. DATE
	IRN 0606 per SSCD 000606R1, EFF. 04−14−98 (Release to File)	03−19−99
F	REVISION F per SSCD 000838R1, EFF. 04−14−98. INCORPORATING THE FOLLOWING PIRNS: 41004−ES−0006B, 41004−ES−0007B, 41004−NA−2029F, 41004−NA−2030G, 41004−NA−2035A, 41004−NA−2037A, 41004−NA−2038B, 41004−NA−2039B, 41004−NA−2040B	03−19−99
G	REVISION G per SSCD 001165, EFF. 06−16−99 INCORPORATING THE FOLLOWING PIRNS: 41004−AS−0009A, 41004−AS−0011C, 41004−AS−0015A, 41004−AS−0020A, 41004−ES−0011A, 41004−NA−2041, 41004−NA−2042B, 41004−NA−2043B, 41004−NA−2044, 41004−ND−0007A, 41004−ND−0009A	07−08−99
H	REVISION H released per SSCD 006955, EFF. 03−24−03 Incorporating the following PIRNs: 41004−AS−0010F 41004−AS−0016D 41004−AS−0019D 41004−AS−2001 41004−AS−2002A 41004−AS−2003E 41004−AS−2004C 41004−ES−0009A 41004−ES−0015 41004−NA−2046 41004−NA−2050A 41004−NA−2051B 41004−NA−2052A 41004−NA−2053A 41004−NA−2054 41004−NA−2056	05−03−04

REV.	DESCRIPTION	PUB. DATE
	41004−NA−2057A 41004−NA−2058A 41004−NA−2059 41004−ND−0005B 41004−ND−0008A 41004−ND−0010B Revision H also incorporates the following PIRNs with associated SSCNs: 41004−NA−2045B SSCN 001465 41004−NA−2047B SSCN 001594 41004−NA−2048A SSCN 001481 41004−NA−2049A SSCN 001555 Revision H closes the following SSCNs as they were overcome by events: 000554, 000583, 000585, 000588, 000591, 000673, 000773, 000823, 000832, 000844, 000845, 000877, 000889, 000894, and 000915 NOTE: Due to past history of this document, IRN 0003 (SSCN 001920) has been retired without use.	
J	REVISION J released per SSCD 009719, EFF. 06−07−06 Incorporate the following approved PIRNs which were created by the applicable Changes listed below: PIRN 41004−AS−2005C IRN N/A SSCN 009719 PIRN 41004−ES−0014A IRN N/A SSCN 009719 PIRN 41004−NA−2060A IRN 0005 SSCN 006135 PIRN 41004−ND−0012B IRN N/A SSCN 009719 Revision J closes the following SSCNs as they were overcome by events: PIRN N/A IRN N/A SSCN 000780 PIRN N/A IRN 0002 SSCN 001740	01−10−07

ERU: /s/ J. Rivas 01−10−07

PREFACE

SSP 41004, Part 2 Common Berthing Mechanism to Pressurized Elements Interface Control Document shall be implemented on all new Program contractual and internal activity and shall be included in any existing contracts through contract changes. This document is under the control of the Interface Control Working Group (ICWG), as described in SSP 30459, ISS Interface Control Plan.

INTERNATIONAL SPACE STATION PROGRAM

COMMON BERTHING MECHANISM TO PRESSURIZED ELEMENTS INTERFACE CONTROL DOCUMENT

LIST OF CHANGES

(SHEET 1 OF 1)

OCTOBER 25, 2005

All changes to paragraphs, tables, and figures in this document are shown below:

SSCBD	ENTRY DATE	CHANGE	PARAGRAPH(S)
009719	10/05	AS−2005C	Table 3.3.2.1.4−1
009719	10/05	ES−0014A	Table 3.3.2.1.4−1
006135	10/05	NA−2060A	Para. 2.2, 3.1.4, App. A
009719	10/05	ND−0012B	Figs. 3.1.4.2−3, 3.3.2.1−7, 3.3.2.1−10, 3.3.2.1−11, 3.3.8−5, 3.3.10−1, Table 3.3.2.1.4−1

NASA/JAXA/ESA/ASI APPROVAL

INTERNATIONAL SPACE STATION PROGRAM

COMMON BERTHING MECHANISM TO PRESSURIZED ELEMENTS INTERFACE CONTROL DOCUMENT PART 2

OCTOBER 25, 2005

/s/D. R. Cooke for Randy H. Brinkley
NASA Program Manager

Randy H. Brinkley
Print Name

10 May 1996
Date

/s/Yasushi Horikawa for Kazuo Suzuki
JAXA Program Manager

Kazuo Suzuki
Print Name

31 May 1996
Date

/s/Alan Thirkettle
ESA Program Manager

Alan Thirkettle
Print Name

26 Mar'96
Date

/s/Giovanni Rum
ASI Program Manager

Giovanni Rum
Print Name

27 Mar 1996
Date

CONCURRENCE

INTERNATIONAL SPACE STATION PROGRAM

COMMON BERTHING MECHANISM TO PRESSURIZED ELEMENTS INTERFACE CONTROL DOCUMENT PART 2

OCTOBER 25, 2005

NASA ICWG Chairman Representative for Concurrence	/s/F. J. Monahan Frank Monahan	3/26/96 DATE
ASI ICWG Chairman Representative for Concurrence	/s/Andrea Lorenzoni Andrea Lorenzoni	03 −26'96 DATE
Boeing ICWG Chairman Representative for Concurrence	/s/H. S. Griffin Howard Griffin	3/26/96 DATE
JAXA ICWG Chairman Representative for Concurrence	/s/Kuniaki Shiraki Kuniaki Shiraki	3/25/96 DATE
ESA ICWG Chairman Representative for Concurrence	/s/Alessio Festa Alessio Festa	26/March/96 DATE
DASA ICWG Chairman Representative for Concurrence	/s/Hans−Jorg Pospieszczyk Hans−Jorg Pospieszcyk	25.3.96 DATE
Alenia ICWG Chairman Representative for Concurrence	/s/Alessandro Bellomo Alessandro Bellomo	25.03.96 DATE

(S) Document has been signed by representative

PRODUCT GROUP CONCURRENCE

INTERNATIONAL SPACE STATION ALPHA PROGRAM

COMMON BERTHING MECHANISM TO PRESSURIZED ELEMENTS INTERFACE CONTROL DOCUMENT PART 2

OCTOBER 25, 2005

Product Group − 1 ICWG Representative for Concurrence	/s/L. T. Archibald L. T. Archibald	3/25/96 DATE
Product Group − 2 ICWG Representative for Concurrence	NA	 DATE
Product Group − 3 ICWG Representative for Concurrence	/s/Ralph Thompson	3/25/96 DATE

(S) Document has been signed by representative

INTERNATIONAL SPACE STATION PROGRAM

COMMON BERTHING MECHANISM TO PRESSURIZED ELEMENTS INTERFACE CONTROL DOCUMENT PART 2

OCTOBER 25, 2005

CONCURRENCE

PREPARED BY:	Warren England	BHOU
	PRINT NAME	ORGN
	/s/ Warren England	4/10/06
	SIGNATURE	DATE
CHECKED BY:	Quentin Henry	BHOU
	PRINT NAME	ORGN
	/s/ Quentin L. Henry	4/11/06
	SIGNATURE	DATE
APPROVED BY (NASA):	Chau Hong	OB/NASA
	PRINT NAME	ORGN
	/s/ Chau Hong	4/4/06
	SIGNATURE	DATE
DQA:	Merry McClain	BHOU
	PRINT NAME	ORGN
	/s/ Merry McClain	4/12/06
	SIGNATURE	DATE

INTERNATIONAL SPACE STATION PROGRAM

COMMON BERTHING MECHANISM TO PRESSURIZED ELEMENTS INTERFACE CONTROL DOCUMENT PART 2

APRIL 30, 2002

NODE 2 PROJECT CONCURRENCE

Alenia	/s/Walter Cugno Walter Cugno	11/21/97 Date
ASI	/s/Andrea Lorenzoni Andrea Lorenzoni	1/7/98 Date
NASA−MSFC	/s/Robert Crumbley Robert Crumbley	11/21/97 Date

TABLE OF CONTENTS

PARAGRAPH		PAGE
1.0	INTRODUCTION	1 − 1
1.1	PURPOSE	1 − 1
1.2	SCOPE	1 − 1
1.3	PRECEDENCE	1 − 1
1.4	DELEGATION OF AUTHORITY	1 − 1
2.0	DOCUMENTS	2 −1
2.1	APPLICABLE DOCUMENTS	2 −1
2.2	REFERENCE DOCUMENTS	2 −8
3.0	INTERFACE	3 − 1
3.1	GENERAL	3 − 1
3.1.1	INTERFACE DESCRIPTION	3 − 1
3.1.2	INTERFACE RESPONSIBILITIES	3 − 1
3.1.3	COORDINATE SYSTEMS	3 − 1
3.1.4	ENVELOPE INTERFACES	3 − 3
3.1.4.1	CBM HARDWARE ENVELOPES	3 − 23
3.1.4.2	CBM IVA SEAL SYSTEM HARDWARE ENVELOPE	3 − 46
3.1.4.3	ACTIVE CBM WIRE HARNESS ENVELOPE	3 − 46
3.1.4.4	NODE 2/3 ACBM RADIAL PORT DEPLOYABLE M/D PETAL HARDWARE ENVELOPE	3 − 55
3.1.5	MASS PROPERTIES	3 − 55
3.1.5.1	CENTER OF MASS	3 − 55
3.1.5.2	MOMENTS OF INERTIA	3 − 55
3.1.5.3	MASS LIMITATIONS	3 − 55
3.1.6	ENGINEERING UNITS AND TOLERANCES	3 − 57
3.1.6.1	TOLERANCE	3 − 57
3.1.6.2	CONVERSIONS	3 − 57
3.2	STRUCTURAL INTERFACES	3 − 57
3.2.1	GENERAL	3 − 57
3.2.1.1	ACTIVE CBM−TO−MODULE INTERFACE DEFLECTION LIMITATIONS	3 − 57
3.2.1.1.1	RADIAL DEFORMATIONS	3 − 57
3.2.1.1.2	DIFFERENTIAL DISPLACEMENT ALONG THE XCBM AXIS	3 − 59
3.2.1.1.3	TANGENTIAL ROTATIONS	3 − 59
3.2.1.2	DELETED	3 − 59
3.2.1.3	PASSIVE CBM−TO−MODULE INTERFACE DEFLECTION LIMITATIONS	3 − 64
3.2.1.3.1	RADIAL DEFORMATIONS	3 − 64
3.2.1.3.2	DIFFERENTIAL DISPLACEMENT ALONG THE XCBM AXIS	3 − 66
3.2.1.3.3	TANGENTIAL ROTATIONS	3 − 66

TABLE OF CONTENTS

PARAGRAPH		PAGE
3.2.2	STRUCTURAL MATHEMATICAL MODELS	3 − 66
3.3	MECHANICAL INTERFACES	3 − 66
3.3.1	GENERAL	3 − 66
3.3.2	ATTACHMENT MECHANISMS	3 − 66
3.3.2.1	COMMON BERTHING MECHANISM−TO−MODULE ATTACHMENT	3 − 66
3.3.2.1.1	ALIGNMENT AND INDEXING	3 − 78
3.3.2.1.2	MODULE CRITICAL DIMENSIONS	3 − 78
3.3.2.1.3	CBM−TO−MODULE IVA SEAL ATTACHMENT	3 − 78
3.3.2.1.4	CBM−TO−MODULE CLOCKING	3 − 78
3.3.2.1.5	MATCH DRILLED HOLES	3 − 78
3.3.3	THERMAL INTERFACES	3 − 89
3.3.3.1	CONDUCTIVE INTERFACES	3 − 89
3.3.3.1.1	INTERFACE DESCRIPTION	3 − 89
3.3.3.2	THERMAL MATHEMATICAL MODELS	3 − 89
3.3.4	ACTIVE CBM−TO−MODULE MOTOR CONTROLLER INTERFACES	3 − 89
3.3.4.1	ACTIVE CBM UNIQUE EPS BULKHEAD CONNECTORS	3 − 89
3.3.4.2	MOTOR CONTROLLER CABLE INTERFACE	3 − 89
3.3.4.3	MOTOR CONTROLLER MOUNTING PROVISIONS (ACTIVE CBM ONLY)	3 − 89
3.3.4.3.1	MOTOR CONTROLLER ATTACHMENT	3 − 89
3.3.5	LEAK CHECK INTERFACES	3 − 99
3.3.5.1	LEAK CHECK PORT DESIGN	3 − 99
3.3.5.2	ATMOSPHERIC CONTAINMENT	3 − 99
3.3.6	ACTIVE CBM−TO−MODULE BULKHEAD FEEDTHRU INTERFACES	3 − 99
3.3.7	GROUND HANDLING INTERFACES	3 − 99
3.3.7.1	HANDLING AND LIFT POINT LOCATIONS	3 − 99
3.3.8	VESTIBULE CLOSEOUT PANEL INTERFACES	3 − 107
3.3.9	M/D CENTER DISK BRACKET INTERFACE DETAILS	3 − 115
3.3.9.1	AXIAL ACBM HATCH BEAM HOLES	3 − 115
3.3.10	PASSIVE THERMAL EQUIPMENT ATTACHMENT PROVISIONS	3 − 115
3.3.10.1	AVAILABLE HOLE LOCATIONS FOR SHIELDING ON ACBM/PCBM RINGS	3 − 115
3.3.11	ACBM WIRE HARNESS ATTACHMENT LOCATIONS	3 − 117
3.3.12	NODE 2 RADIAL PORT M/OD SHIELD/ACBM INTERFACES	3 − 118
3.3.13	PCBM INTERFACES FOR CUPOLA HANDRAIL BRACKETS	3 − 118
3.3.13.1	CUPOLA HANDRAIL INDUCED LOADS	3 − 118
3.4	ENVIRONMENTAL INTERFACES	3 − 165

TABLE OF CONTENTS

PARAGRAPH		PAGE
3.4.1	ACBM ENVIRONMENTAL INTERFACES	3 − 165
3.4.2	PCBM ENVIRONMENTAL INTERFACES	3 − 165
3.5	SYSTEM INTERFACES (ACTIVE COMMON BERTHING MECHANISM ONLY)	3 − 165
3.5.1	GENERAL	3 − 165
3.5.2	CONNECTORS	3 − 165
3.5.2.1	POWER DISTRIBUTION	3 − 165
3.5.2.1.1	DELETED	3 − 165
3.5.2.1.2	POWER QUALITY	3 − 165
3.5.2.2	DELETED	3 − 165
3.5.2.3	ELECTRICAL BONDING	3 − 165
3.5.2.4	CABLE CHARACTERISTICS	3 − 166
3.5.3	MODULE BULKHEAD UTILITY PENETRATION	3 − 166
3.5.3.1	CONNECTORS	3 − 166
3.5.4	EXTRAVEHICULAR ACTIVITY SYSTEM	3 − 166
3.6	SOFTWARE INTERFACES (NASA ONLY)	3 − 166

APPENDIX		PAGE
A	ABBREVIATIONS AND ACRONYMS	A − 1
B	INDEX OF TBDS/TBRS/TBCS	B − 1
C	ISSUE LIST FOR SSP 41004	C − 1

TABLE OF CONTENTS

TABLES

TABLE		PAGE
3.1.6.1−1	LINEAR TOLERANCES	3 − 57
3.3.2.1.3−1	PASSIVE CBM IVA SEAL ANGULAR ATTACHMENT LOCATIONS	3 − 82
3.3.2.1.3−2	ACTIVE CBM IVA SEAL ANGULAR ATTACHMENT LOCATIONS	3 − 84
3.3.2.1.4−1	CBM INSTALLATION CLOCKING (SHEET 2 OF 3)	3 − 86
3.3.4.1−1	EPS BULKHEAD CONNECTOR FOR ACTIVE CBM CONTROL (POWER)	3 − 90
3.3.4.1−2	EPS BULKHEAD CONNECTOR FOR ACTIVE CBM CONTROL (REDUNDANT POWER)	3 − 91
3.3.4.2−1	C&DH BULKHEAD CONNECTOR FOR ACTIVE CBM CONTROL (1553 NETWORK A)	3 − 92
3.3.4.2−2	C&DH BULKHEAD CONNECTOR FOR ACTIVE CBM CONTROL (1553 NETWORK B)	3 − 93

TABLE OF CONTENTS

FIGURES

FIGURE		PAGE
3.1.3−1	COMMON BERTHING MECHANISM COORDINATE SYSTEM	3 − 2
3.1.4−1	STATIC ENVELOPE OF PASSIVE CBM (SIDE VIEW)	3 − 4
3.1.4−2	STATIC ENVELOPE OF PASSIVE COMMON BERTHING MECHANISM (END VIEW)	3 − 5
3.1.4−3	STATIC ENVELOPE OF ACTIVE CBM ON AXIAL PORT WITHOUT THERMAL/DEBRIS COVER (SIDE VIEW)	3 − 6
3.1.4−4	STATIC ENVELOPE OF ACTIVE COMMON BERTHING MECHANISM ON AXIAL PORT WITHOUT THERMAL/DEBRIS COVER (END VIEW)	3 − 7
3.1.4−5	STATIC ENVELOPE OF ACTIVE CBM ON AXIAL PORT WITH METEOROID / DEBRIS SKIRT (SIDE VIEW)	3 − 8
3.1.4−5.1	ANGULAR POSITION OF THERMAL DEBRIS / SKIRT ATTACH POINTS	3 − 9
3.1.4−5.2	AXIAL AND RADIAL POSITION OF THERMAL / DEBRIS SKIRT ATTACH POINTS	3 − 10
3.1.4−6	STATIC ENVELOPE OF ACTIVE CBM ON RESOURCE NODE RADIAL PORT WITHOUT THERMAL/DEBRIS COVER	3 − 11
3.1.4−7	STATIC ENVELOPE OF ACTIVE CBM ON RESOURCE NODE RADIAL PORT WITH THERMAL/DEBRIS COVERS CLOSED	3 − 12
3.1.4−7.1	STATIC AND DYNAMIC ENVELOPE OF ACTIVE CBM ON RESOURCE NODE RADIAL PORT WITH THERMAL/DEBRIS COVERS OPEN AND SKIRTS	3 − 13
3.1.4−7.2	STATIC AND DYNAMIC ENVELOPE OF ACTIVE CBM ON RESOURCE NODE RADIAL PORT WITH THERMAL/DEBRIS COVERS OPEN AND SKIRTS (SECTION B−B)	3 − 14
3.1.4−7.3	STATIC AND DYNAMIC ENVELOPE OF ACTIVE CBM ON RESOURCE NODE RADIAL PORT WITH THERMAL/DEBRIS COVERS OPEN AND SKIRTS (SECTION B−B)	3 − 15
3.1.4−8	STATIC ENVELOPE OF ACTIVE CBM ON JAPANESE EXPERIMENT MODULE RADIAL PORT WITHOUT THERMAL/DEBRIS COVER (SIDE VIEW)	3 − 16
3.1.4−9	STATIC ENVELOPE OF ACTIVE CBM ON JAPANESE EXPERIMENT MODULE RADIAL PORT WITH THERMAL/DEBRIS COVER	3 − 17
3.1.4−10	MODULE−TO−MODULE UTILITY JUMPER ENVELOPE ACTIVE AND PASSIVE CBM−TO−MODULE INTERFACE	3 − 18
3.1.4−11	MODULE−TO−MODULE UTILITY JUMPER ENVELOPE (SECTION A−A)	3 − 19
3.1.4−12	MODULE−TO−MODULE UTILITY JUMPER ENVELOPE (SECTION B−B)	3 − 20
3.1.4−13	STATIC ENVELOPE OF ACTIVE CBM ASI NODES MODULE RADIAL PORTS WITHOUT THERMAL/DEBRIS COVER	3 − 21
3.1.4−14	STATIC ENVELOPE OF ACTIVE CBM ON RESOURCE NODE RADIAL PORT WITH THERMAL/DEBRIS COVERS CLOSED	3 − 22

TABLE OF CONTENTS

FIGURE		PAGE
3.1.4.1−1	ACTIVE CBM CLEARANCE ENVELOPE FOR PASSIVE CBM ALIGNMENT GUIDES	3 − 24
3.1.4.1−2	ACTIVE CBM CLEARANCE ENVELOPE FOR PASSIVE CBM ALIGNMENT GUIDES (VIEW A−A)	3 − 25
3.1.4.1−3	ACTIVE CBM CAPTURE LATCH CLEARANCE ENVELOPE	3 − 26
3.1.4.1−4	ACTIVE CBM CAPTURE LATCH CLEARANCE ENVELOPE (VIEW A−A)	3 − 27
3.1.4.1−5	ACTIVE CBM CAPTURE LATCH CLEARANCE ENVELOPE (VIEW B−B)	3 − 28
3.1.4.1−6	MOTOR CONTROLLER CLEARANCE ENVELOPE	3 − 29
3.1.4.1−7	TYPICAL MOTOR CONTROLLER AXIAL HATCH BEAM CLEARANCE ENVELOPE (VIEW A−A)	3 − 30
3.1.4.1−8	POWERED BOLT CENTERLINE LOCATIONS	3 − 31
3.1.4.1−9	POWERED BOLT MOTOR CLEARANCE ENVELOPE	3 − 32
3.1.4.1−10	POWER BOLT MOTOR CLEARANCE ENVELOPE (VIEW A−A)	3 − 33
3.1.4.1−11	ACTIVE CBM READY-TO-LATCH CLEARANCE ENVELOPE	3 − 34
3.1.4.1−12	READY-TO-LATCH CLEARANCE ENVELOPE (VIEW A−A)	3 − 35
3.1.4.1−13	READY-TO-LATCH CLEARANCE ENVELOPE (VIEW B−B)	3 − 36
3.1.4.1−14	PASSIVE CBM CLEARANCE ENVELOPE FOR ACTIVE CBM ALIGNMENT GUIDES	3 − 37
3.1.4.1−15	PASSIVE CBM CLEARANCE ENVELOPE FOR ACTIVE CBMALIGNMENT GUIDES (VIEW A−A)	3 − 38
3.1.4.1−16	ACTIVE CBM CAPTURE LATCH AND FITTING CLEARANCE ENVELOPE FOR PASSIVE CBM	3 − 39
3.1.4.1−17	PASSIVE CBM CAPTURE LATCH AND FITTING CLEARANCE ENVELOPE (VIEW A−A)	3 − 40
3.1.4.1−18	PASSIVE CBM CAPTURE LATCH AND FITTING CLEARANCE ENVELOPE (VIEW B−B)	3 − 41
3.1.4.1−19	MOTOR CONTROLLER AND M/D CENTER COVER PASSIVE CBM HARDWARE CLEARANCE ENVELOPE	3 − 42
3.1.4.1−20	MOTOR CONTROLLER AND M/D CENTER COVER PCBM HARDWARE CLEARANCE (VIEW D −D)	3 − 43
3.1.4.1−21	PASSIVE CBM CLEARANCE ENVELOPE FOR POWERED BOLT NUT	3 − 44
3.1.4.1−22	PCBM CLEARANCE ENVELOPE FOR POWERED BOLT NUT (VIEW E −E)	3 − 45
3.1.4.2−1	STAY OUT ZONES FOR CBM-TO-CBM IVA SEALS IN PLACE	3 − 47
3.1.4.2−2	STAY OUT ZONES FOR CBM-TO-CBM IVA SEALS IN PLACE (VIEWS A−A AND B−B)	3 − 48

TABLE OF CONTENTS

FIGURE		PAGE
3.1.4.2−3	STAY OUT ZONES FOR CBM−TO−PE IVA SEALS	3 − 49
3.1.4.2−4	GUSSET INTRUSIONS INTO CBM−TO−PE IVA SEAL STAYOUT	3 − 50
3.1.4.2−5	LEAK CHECK PORT INTRUSIONS INTO CBM−TO−PE IVA SEAL STAYOUT	3 − 51
3.1.4.2−6	POWERED BOLT INTRUSIONS INTO ACBM−TO−PE IVA SEAL STAYOUT	3 − 52
3.1.4.2−7	CAPTURE LATCH INTRUSION INTO IVA SEAL STAYOUT ZONE	3 − 53
3.1.4.3−1	ACTIVE CBM WIRE HARNESS ENVELOPE	3 − 54
3.1.4.4−1	DEPLOYABLE COVER MODELS	3 − 55
3.1.5.1−1	COMMON BERTHING MECHANISM CENTER OF MASS AND MOMENTS OF INERTIA	3 − 56
3.2.1.1.1−1	ACTIVE CBM−TO−MODULE INTERFACE RADIAL DISPLACEMENTS	3 − 58
3.2.1.1.2−1	DIFFERENTIAL DISPLACEMENT ALONG THE XCBM AXIS	3 − 60
3.2.1.1.3−1	DEFINITION OF BULKHEAD DEFLECTION PARAMETERS − UNDEFORMED STATE	3 − 61
3.2.1.1.3−2	DEFINITION OF BULKHEAD DEFLECTION PARAMETERS − DEFORMED STATE (MMAX)	3 − 62
3.2.1.1.3−3	DEFINITION OF BULKHEAD DEFLECTION PARAMETERS −DEFORMED STAT (MMIN)	3 − 63
3.2.1.3.1−1	PASSIVE CBM−TO−MODULE INTERFACE RADIAL DISPLACEMENTS	3 − 65
3.3.2.1−1	PASSIVE CBM−TO−MODULE ATTACHMENT BOLT CIRCLES AND INDEXING PIN LOCATIONS	3 − 67
3.3.2.1−2	ACTIVE CBM−TO−MODULE ATTACHMENT BOLT CIRCLES AND INDEXING PIN LOCATIONS	3 − 68
3.3.2.1−3	ACTIVE CBM−TO−MODULE ATTACHMENT BOLT CIRCLES AND INDEXING PIN LOCATIONS (VIEW A)	3 − 69
3.3.2.1−4	MODULE−TO−PASSIVE CBM ATTACHMENT BOLT CIRCLES AND HOLE LOCATIONS	3 − 70
3.3.2.1−5	MODULE−TO−ACTIVE CBM ATTACHMENT BOLT CIRCLES HOLE LOCATIONS	3 − 71
3.3.2.1−6	MODULE−TO−ACTIVE CBM ATTACHMENT BOLT CIRCLES AND INDEXING HOLE LOCATIONS (VIEW B)	3 − 72
3.3.2.1−7	ATTACHMENT FASTENERS CONFIGURATION	3 − 73
3.3.2.1−8	PASSIVE CBM FLANGE DETAIL AND SEAL CONFIGURATION	3 − 74
3.3.2.1−9	ACTIVE CBM FLANGE DETAIL AND SEAL CONFIGURATION	3 − 75
3.3.2.1−10	MODULE FLANGE DETAIL AT THE CBM−TO−MODULE INTERFACE	3 − 76
3.3.2.1−11	MODULE FLANGE DETAIL AT THE CBM−TO−MODULE INTERFACE (VIEW H)	3 − 77
3.3.2.1.1−1	MODULE−TO−CBM INDEXING HOLE LOCATIONS	3 − 79

TABLE OF CONTENTS

FIGURE		PAGE
3.3.2.1.2−1	MODULE CRITICAL DIMENSIONS	3 − 80
3.3.2.1.3−1	PASSIVE CBM IVA SEAL ATTACHMENT	3 − 81
3.3.2.1.3−2	ACTIVE CBM IVA SEAL ATTACHMENT	3 − 83
3.3.2.1.4−1	NODE 1 CBM CLOCKING	3 − 85
3.3.2.1.4−2	NODE 2 CBM CLOCKING	3 − 86
3.3.2.1.4−3	NODE 3 CBM CLOCKING	3 − 86
3.3.2.1.4−4	CUPOLA PCBM CLOCKING	3 − 87
3.3.2.1.5−1	NODE 2 AND NODE 3 RADIAL PORT MATCH DRILLED HOLE LOCATION	3 − 88
3.3.4.3−1	MOTOR CONTROLLER MOUNTING AREAS	3 − 94
3.3.4.3−2	MOTOR CONTROLLER MOUNTING AREAS (VIEW A−A)	3 − 95
3.3.4.3.1−1	MOTOR CONTROLLER−TO−MODULE MOUNTING DETAILS	3 − 96
3.3.4.3.1−2	MOTOR CONTROLLER−TO−MODULE MOUNTING DETAILS (RADIAL PORTS) (VIEW A)	3 − 97
3.3.4.3.1−3	MOTOR CONTROLLER−TO−MODULE MOUNTING DETAILS (SECTION A−A)	3 − 98
3.3.5.1−1	CBM LEAK CHECK PORT LOCATION	3 − 100
3.3.5.1−2	CBM LEAK CHECK PORT DETAIL	3 − 101
3.3.5.1−3	PCBM LEAK CHECK PORT DETAIL	3 − 102
3.3.6−1	CBM FEEDTHRU LOCATIONS (ACTIVE CBM ONLY)	3 − 103
3.3.6−2	CBM FEEDTHRU LOCATIONS (JEM−PM ACTIVE CBM ONLY)	3 − 104
3.3.7.1−1	HANDLING AND LIFT POINT LOCATIONS FOR ACBM AND PCBM STRUCTURAL RINGS	3 − 105
3.3.7.1−2	TYPICAL HANDLING/LIFT POINT HOLE	3 − 106
3.3.8−1	CLOSEOUT PANEL TO NODE 1 RADIAL BULKHEAD INTERFACE	3 − 108
3.3.8−2	CLOSEOUT PANEL TO NODE 1, LAB AND AIRLOCK AXIAL BULKHEAD INTERFACE	3 − 109
3.3.8−3	CLOSEOUT PANEL TO APM, MPLM, NODE 2 AND NODE 3 PCBM AXIAL BULKHEAD INTERFACE	3 − 110
3.3.8−4	CLOSEOUT PANEL TO PMA INTERFACE	3 − 111
3.3.8−5	CLOSEOUT PANEL TO JEM PM, JEM ELM PS AND HTV AXIAL BULKHEAD INTERFACE	3 − 112
3.3.8−6	CLOSEOUT PANEL TO NODE 2 & 3 RADIAL BULKHEAD INTERFACE	3 − 113
3.3.8−7	CLOSEOUT PANEL TO NODE 2 AND NODE 3 ACBM AXIAL BULKHEAD INTERFACE	3 − 114
3.3.9−1	RADIAL PORT M/D CENTER DISK BRACKET HOLE DETAILS (NODE RADIAL PORTS ONLY)	3 − 116

TABLE OF CONTENTS

FIGURE		PAGE
3.3.9.1−1	AXIAL ACBM GROUND STRAP HOLE DETAILS	3 − 117
3.3.10−1	PASSIVE CBM EXTERNAL ATTACHMENT PROVISIONS	3 − 119
3.3.10−2	ALIGNMENT SOCKET DETAILS (SHEET 1 OF 2)	3 − 120
3.3.10−2	ALIGNMENT SOCKET DETAILS (SHEET 2 OF 2)	3 − 121
3.3.10−3	THERMAL STANDOFF DETAILS	3 − 122
3.3.10−3.1	FOLLOWER STAY OUT ZONE	3 − 123
3.3.10−3.2	CONTAMINATION COVER STAY OUT ZONE	3 − 124
3.3.10−4	ACTIVE CBM EXTERNAL ATTACHMENT PROVISIONS	3 − 125
3.3.10−5	ALIGNMENT PIN DETAILS	3 − 126
3.3.10−6	STRIKE PLATE DETAILS	3 − 127
3.3.10−6 .1	BUMPER STAY OUT ZONE	3 − 128
3.3.10−7	PASSIVE CBM SKIRT ATTACH POINTS (SHEET 1 OF 9)	3 − 129
3.3.10−7	PASSIVE CBM SKIRT ATTACH POINTS (SHEET 2 OF 9)	3 − 130
3.3.10−7	PASSIVE CBM SKIRT ATTACH POINTS (SHEET 3 OF 9)	3 − 131
3.3.10−7	PASSIVE CBM SKIRT ATTACH POINTS (SHEET 4 OF 9)	3 − 132
3.3.10−7	PASSIVE CBM SKIRT ATTACH POINTS (SHEET 5 OF 9)	3 − 133
3.3.10−7	PASSIVE CBM SKIRT ATTACH POINTS (SHEET 6 OF 9)	3 − 134
3.3.10−7	PASSIVE CBM SKIRT ATTACH POINTS (SHEET 7 OF 9)	3 − 135
3.3.10−7	PASSIVE CBM SKIRT ATTACH POINTS (SHEET 8 OF 9)	3 − 136
3.3.10−7	PASSIVE CBM SKIRT ATTACH POINTS (SHEET 9 OF 9)	3 − 137
3.3.10−8	PCBM SKIRT SUPPORT DETAILS (SHEET 1 OF 8)	3 − 138
3.3.10−8	PCBM SKIRT SUPPORT DETAILS (SHEET 2 OF 8)	3 − 139
3.3.10−8	PCBM SKIRT SUPPORT DETAILS (SHEET 3 OF 8)	3 − 140
3.3.10−8	PCBM SKIRT SUPPORT DETAILS (SHEET 4 OF 8)	3 − 141
3.3.10−8	PCBM SKIRT SUPPORT DETAILS (SHEET 5 OF 8)	3 − 142
3.3.10−8	PCBM SKIRT SUPPORT DETAILS (SHEET 6 OF 8)	3 − 143
3.3.10−8	PCBM SKIRT SUPPORT DETAILS (SHEET 7 OF 8)	3 − 144
3.3.10−8	PCBM SKIRT SUPPORT DETAILS (SHEET 8 OF 8)	3 − 145
3.3.10−9	PCBM PASSIVE THERMAL ATTACH LOCATIONS−INTERNAL	3 − 146
3.3.10−10	PCBM PASSIVE THERMAL AND GROUNDING AVAILABLE HOLE ATTACH LOCATIONS−INTERNAL (SECTION A−A OF RING GUSSETS) (PAGE 1 OF 2)	3 − 147
3.3.10−10	PCBM PASSIVE THERMAL AND GROUNDING AVAILABLE HOLE ATTACH LOCATIONS−INTERNAL (SECTION A−A OF RING GUSSETS) (PAGE 2 OF 2)	3 − 148
3.3.10−11	PCBM GUSSET DETAILS −INTERNAL	3 − 149
3.3.10−12	PCBM AVAILABLE ATTACHMENT AREA −INTERNAL FACE	3 − 150

TABLE OF CONTENTS

FIGURE		PAGE
3.3.10−13	TYPICAL PCBM ENVELOPES FOR MLI INSTALLATION	3 − 151
3.3.10.1−1	CLOSE−OUT ATTACHMENT HOLE LOCATIONS FOR ACTIVE AND PASSIVE CBM STRUCTURAL RINGS	3 − 152
3.3.10.1−2	TYPICAL CLOSE−OUT ATTACHMENT HOLE CONFIGURATION	3 − 153
3.3.11−1	DEVIATION FROM DRAWING 683−13418, SHEET FOR NODE 2 AND 3	3 − 154
3.3.11−2	(1/3) DEVIATION FROM DRAWING 683−13418, SHEET 2 JEM PM RADIAL PORT	3 − 155
3.3.11−2	(2/3) DEVIATION FROM DRAWING 683−13418, SHEET 2 JEM PM RADIAL PORT	3 − 156
3.3.11−2	(3/3) DEVIATION FROM DRAWING 683−13418, SHEET 2 JEM PM RADIAL PORT	3 − 157
3.3.12−1	M/OD BRACKET LOCATIONS	3 − 158
3.3.12−2	M/OD BRACKET DETAIL	3 − 159
3.3.13−1	PCBM TO CUPOLA SECONDARY STRUCTURE INTERFACES	3 − 160
3.3.13−2	PCBM TO CUPOLA SECONDARY STRUCTURE INTERFACES, BRACKET GEOMETRY AND FASTENER ORIENTATION	3 − 161
3.3.13−3	PCBM TO CUPOLA SECONDARY STRUCTURE INTERFACES, BRACKET GEOMETRY AND FASTENER ORIENTATION	3 − 162
3.3.13−4	PCBM TO CUPOLA SECONDARY STRUCTURE INTERFACES, BRACKET GEOMETRY AND FASTENER ORIENTATION	3 − 163
3.3.13−5	PCBM TO CUPOLA SECONDARY STRUCTURE INTERFACES, BRACKET GEOMETRY AND FASTENER ORIENTATION	3 − 164
3.5.2.1−1	ACBM POWER DISTRIBUTION	3 − 167

1.0 INTRODUCTION

The Space Station Common Berthing Mechanism (CBM) will be used on the Agenzia Spaziale Italiana (ASI) pressurized element, European Space Agency (ESA) pressurized element, the Japanese Aerospace Exploration Agency of Japan (JAXA) pressurized elements, and the National Aeronautics and Space Administration (NASA) pressurized elements, all of which are hereinafter referred to simply as PEs.

There are two types of CBMs used on the Space Station. These are referred to as the Active CBM (ACBM) and the Passive CBM (PCBM). 'CBM' will be used to refer to either the ACBM or the PCBM interchangeably.

1.1 PURPOSE

This document defines the physical and functional interfaces between the CBM with its local controllers and the PEs. The CBM is used as a means of structural attachment and pressurized crew transfer between PEs. The physical and functional interfaces required for the PCBM are applicable to NASA, ASI, ESA, and JAXA. The physical and functional interfaces required for the ACBM are applicable to NASA and JAXA. Interface requirements between the Active or Passive CBM and the PEs are identified in SSP 41004, Part 1.

1.2 SCOPE

The scope of this document is limited to interfaces between the CBM and the PE with the exception of defining the associated volume for inter−module jumpers.

1.3 PRECEDENCE

In the event of conflict between SSP 41162, Segment Specification for the U.S. On−orbit Segment and the contents of this Interface Control Document (ICD), the requirements of SSP 41162 shall take precedence.

1.4 DELEGATION OF AUTHORITY

This document is prepared and maintained in accordance with SSP 30459, NASA Space Station Interface Control Plan.

2.0 DOCUMENTS

The following documents of the exact issue shown form a part of this document to the extent specified herein.

2.1 APPLICABLE DOCUMENTS

DOCUMENT NO.	TITLE
1F48000−1.−−.04.NADIR.model	Node 1 Exterior − Nadir
Rev Basic	
July 29, 1998	
Reference	Table 3.1.4.4−1
1F98912−1.−−.03.model	Node 1 Exterior − Nadir
Rev Basic	
July 29, 1998	
Reference	Table 3.1.4.4−1
683−11610−1.−−.04.model	Node 1 Structural Assembly − Nadir
Rev Basic	
July 29, 1998	
Reference	Table 3.1.4.4−1
683−11617−15.−−.01.model	Node 1 Support Structure − Nadir
Rev D	
July 29, 1998	
Reference	Table 3.1.4.4−1
683−11617−3.−−.01.model	Node 1 Support Structure − Nadir
Rev D	
July 29, 1998	
Reference	Table 3.1.4.4−1
683−11690−1.−−.04.model	Node 1 Secondary Structure − Nadir
Rev A	
July 29, 1998	
Reference	Table 3.1.4.4−1

DOCUMENT NO.	TITLE
683−11690−1.−−.06.model Rev A July 29, 1998 Reference	Node 1 Secondary Structure − Nadir Table 3.1.4.4−1
683−11691−3.−−.01.model Rev C July 29, 1998 Reference	Node 1 Debris Shielding − Nadir Table 3.1.4.4−1
683−13400−4.−A.01.model Rev A July 29, 1998 Reference	Node 1 CBM − Nadir Table 3.1.4.4−1
683−14572−1.−−.03.model Rev A July 29, 1998 Reference	Node 1 CBM Deployable Cover − Nadir Table 3.1.4.4−1
683−14576−1.−−.03.model Rev B July 29, 1998 Reference	Node 1 CBM Center Cover − Nadir Table 3.1.4.4−1
683−23543−1.−−.03.model Rev A July 29, 1998 Reference	Node 1 CBM Closeout Shielding − Nadir Table 3.1.4.4−1
683−27927 Rev B Notice 2 10 Nov 97 Reference	Bracket Assembly−Meteroid Debris Cover Paragraph 3.3.12

DOCUMENT NO.	TITLE
683−55110−6.−−.01.model Rev D July 29, 1998	Node 1 Feedthroughs − Nadir
Reference	Table 3.1.4.4−1
AMS 5525F 1989	Steel Sheet, Strip, and Plate, Corrosion and Heat Resistant 15 Cr − 25.5 − Ni − 1.2 Mo − 2.1 Ti − 0.006B − 0.30 V 1800 Degrees F (980 Degrees C) Solution Heat Treated
Reference	Figure 3.3.2.1−7
AMS 5737L 1989	Steel Bars, Wire, Forging, and Tubing, Corrosion and Heat Resistant 15 Cr − 25.5 Ni − 1.2 Mo − 21 Ti − 0.006B − 0.30 V Consumable Electrode Melted 1650 Degrees F (899 Degrees C) Solution and Precipitation Heat Treated
Reference	Figures 3.3.2.1−7, 3.3.4.3.1−2
ASTM E380 Rev A 1 Jan 93	Standard Practice for Use of the International System of Units (SI) (The Modernized Metric System)
Reference	Paragraphs 3.1.6.1, 3.1.6.2
CLT−TN−AI−040	Reduced CBM and Hatch Interface Thermal Mathematical Model for APM Analysis
Reference	Paragraph 3.3.3.2
CLS−TN−AI−0049	CBM and Hatch Static Mathematical Model Description
Reference	Paragraph 3.2.2
D 683−13418 Rev G Feb 99	Insert Installation Berthing Mechanism
Reference	Paragraph 3.3.11
D 683−85132	CBM Structural Mathematical Model Description
Reference	Paragraph 3.2.2

DOCUMENT NO.	TITLE
D 683−85133	CBM Thermal Mathematical Model Description
Reference	Paragraph 3.3.3.2
FED−STD−H28 3 Dec 90	Screw Thread Standards for Federal Services, Change Notice 3
Reference	Figure 3.3.4.3.1−2
MIL−L−8937	Lubricant, Solid Film, Heat Cured, Corrosion Inhibiting, NATO Code No. S−1738 (Superceded by MIL−L−46010)
Reference	Figure 3.3.2.1−7
MIL−L−46010 Rev B, Amend 2 9/5/90	Lubricant, Solid Film, Heat Cured, Corrosion Inhibiting
Reference	Figure 3.3.4.3.1−2, 3.3.5.1−2, 3.3.5.1−3
MIL−S−8879 Rev C, Amend 1 9/2/92	Screw Threads, Controlled Radius Root with Increased Minor Diameter, General Specification
Reference	Figure 3.3.2.1−7, 3.3.5.1−2, 3.3.7.1−2, 3.3.5.1−3, 3.3.10.1−2
MIL−STD−865 Rev C 11/1/88	Selective (Brush Plating), Electrodeposition
Reference	Figure 3.3.4.3.1−1
MIL−STD−1246 Rev Latest	Product Cleanliness levels and Contamination Control Program
Reference	Paragraph 3.2.1
MS 33537 Rev E 6/11/91	Insert, Screw Thread, Helical Coil, Inch Series, Coarse and Fine Thread, Standard Assembly Dimensions
Reference	Figure 3.3.2.1−4, 3.3.2.1−6, 3.3.2.1.3−1, 3.3.2.1.3−2

DOCUMENT NO.	TITLE
MS 51835 Rev A 11/25/70	Inserts and Studs, Locked In−Key Locked, Hole Dimensions for Assembly
Reference	Figure 3.3.4.3.1−2, 3.3.9.1−1
MSFC−STD−486 Rev B	Threaded Fasteners, Torque Limits for, Standard
Reference	Figure 3.3.2.1−7
QQ−P−35C Rev C 10/28/88	Passivation Treatments for Corrosion Resistant Steel
Reference	Figure 3.3.2.1−7, 3.3.4.3.1−2
SSP 30459 Rev F 3/23/94	International Space Station Interface Control Plan
Reference	Preface, Paragraph 1.4
SSP 41004 Rev D 27 Mar 97 Rev F (Node 1, PMA 1 and PMA 2 only) 3/27/98 IRN 41004−1465, 1594, 1481, 1555	Common Berthing Mechanism to Pressurized Elements Interface Control Document (ICD), Part 1
Reference	Paragraph 1.1, Figure 3.1.4−8, Paragraph 3.1.5.1, 3.1.5.3, 3.3.5.2, 3.4.1, 3.4.2, 3.5.2.1.2
SSP 41140 Reference	Node Element 1 to U.S. Habitation Element ICD, Part 2 Figure 3.3.6−1
SSP 41015 Reference	Common Hatch Pressurized Element ICD Paragraph 3.1.4

SSP 41142	NASA Space Station Node Elements to Cupola Element, Part 2
Reference	Figure 3.3.6−1
SSP 41143	NASA Space Station Node Element 2 to U.S. Laboratory Element ICD, Part 2
Reference	Figure 3.3.6−1
SSP 41145	NASA Space Station Node Element 1 to Airlock Element ICD, Part 2
Reference	Figure 3.3.6−1
SSP 41151 Rev A 10/17/95	Space Station Manned Base to Japanese Experiment Module IRD
Reference	Paragraph 3.6
SSP 41175	Space Station Management and Control to International Space Station, General Software ICD
Reference	Paragraph 3.6
SSP 41178−27 Basic June 10, 1996	Software Interface Control Document Part 1 Internal Multiplexer/Demultiplexer to International Space Station Book 27, Common Berthing Mechanism Interface
Reference	Paragraph 3.6
SSP 42000 Rev K 6/13/96	United States On-Orbit to Japanese Experiment Module ICD
Reference	Paragraph 3.5.3, 3.5.4
SSP 42001 Rev K July 1997	Space Station Manned Base to Columbus to Attached Pressurized Module ICD
Reference	Figure 3.3.6−1, Paragraph 3.5.4

DOCUMENT NO.	TITLE
SSP 42007 Rev D Rev F (Node 1, PMA 1 and PMA 2 only) 13 Feb 98 IRNs 42007−0311, 0253, 0600, 0719 and 1465	U.S. On-Orbit Segment to Italian Mini-Pressurized Logistics Module ICD, Part 2
Reference	Figure 3.3.6−1
SSP 42097	Pressurized Mating Adapter to U.S. Pressurized Elements ICD
Reference	Figure 3.3.6−1
SSP 44030	Z1 to Node 1 ICD, Part 2
Reference	Figure 3.3.6−1
SSP 50144−4 Rev A 30 May 97 Rev A (Node 1, PMA 1 and PMA 2 only) 30 May 97 IRN 50144−4−0004	Prime Contractor Software Interface Control Document, Part 1, Primary Node Control Software to International Space Station Book 4, Common Berthing Mechanism Interface. (Node 1)
Reference	Paragraph 3.6
SSQ 21635 Rev B 7/16/93 Rev H (Node 1, PMA 1 and PMA 2 only) 1 Aug 97 DCN 001, 011, 012, 013 and 014, 015	Connectors and Accessories, Electrical, Circular, Miniature, IVA/EVA Compatible, Space Quality, General Specification
Reference	Table 3.3.4.1−1, 3.3.4.1−2, 3.3.4.2−1, 3.3.4.2−2

2.2 REFERENCE DOCUMENTS

DOCUMENT NO.	TITLE
SSP 41162	U. S. On−Orbit Segment Specification
Reference	Paragraph 1.3
AMS 5844	Iron−Nickel Alloy bars, forgings and rings
Reference	Figure 3.3.2.1−7
AMS 5732	Steel, Corrosion and Heat Resistant, bars, wire, forgings, tubing, and rings
Reference	Figure 3.3.2.1−7
MIL−A−8625	Anodic Coatings for Aluminum and Aluminum Alloys
Reference	Figures 3.3.2.1−8, −9, 3.3.10−2, 3.3.10−3, 3.3.10−3.1, 3.3.10−3.2, 3.3.10−5, 3.3.10−6, 3.3.10−10, 3.3.10−11, 3.3.10−12
MIL−C−5541	Chemical Conversion Coatings on Aluminum and Aluminum Alloys
Reference	Figures 3.3.2.1−8, 3.3.2.1−9, 3.3.2.1−10, 3.3.2.1−11, 3.3.7.1−2, 3.3.10−10

3.0 INTERFACE

3.1 GENERAL

Two types of CBMs are used on the International Space Station: Active CBMs and Passive CBMs.

3.1.1 INTERFACE DESCRIPTION

The CBM−to−Pressurized Element (PE) interface consists of the bolted flange and CBM utilities. The on−orbit module−to−module utility jumper envelope is also included in this ICD.

3.1.2 INTERFACE RESPONSIBILITIES

Providers of the CBM and modules ensure conformation to the interface defined in this document.

3.1.3 COORDINATE SYSTEMS

The CBM coordinate system is shown in Figure 3.1.3−1, Common Berthing Mechanism Coordinate System.

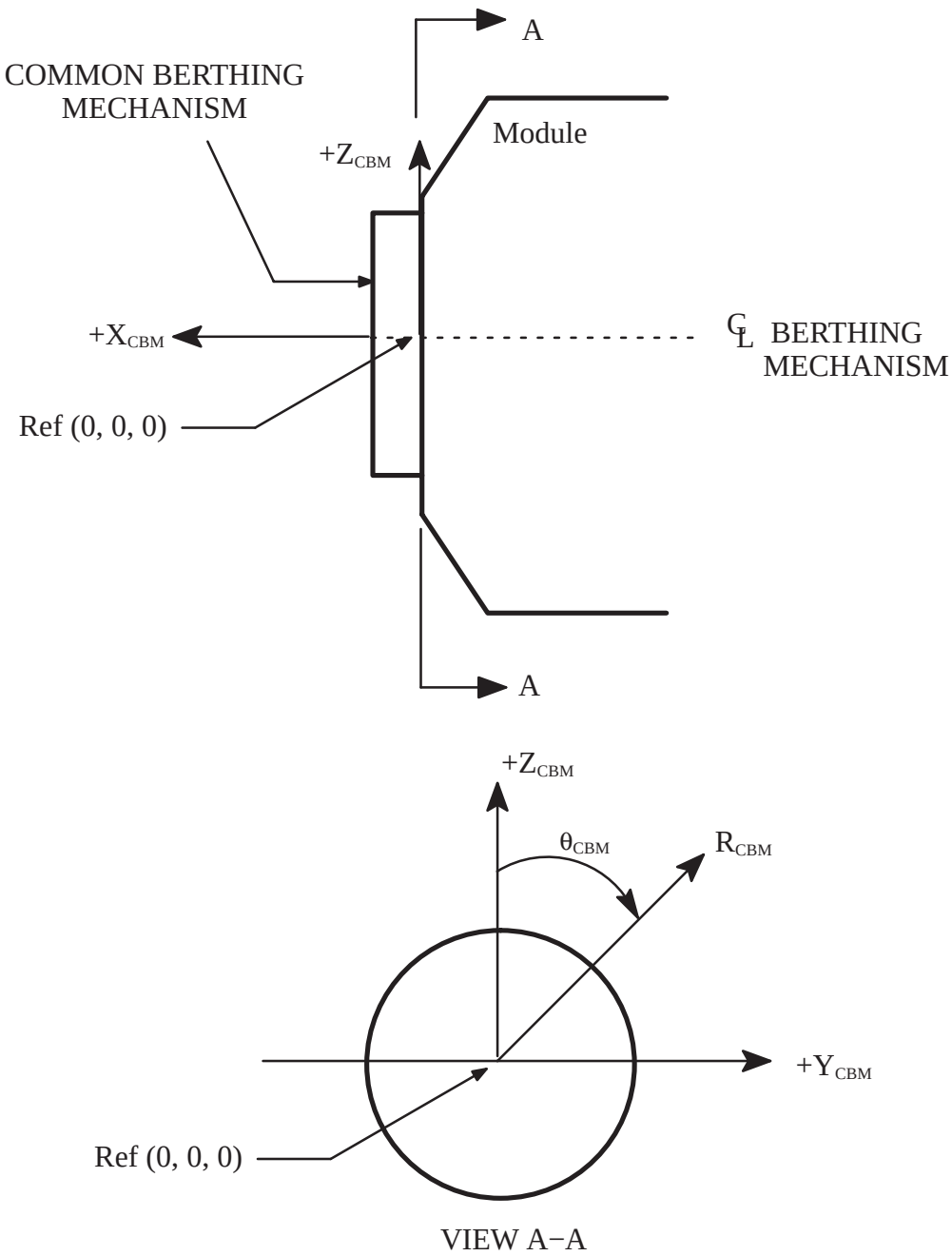

NOTE 1) R_{CBM} defines radial coordinate system.

NOTE 2) This is a local coordinate system for the CBM and relates only to the drawings referenced or contained in this document.

FIGURE 3.1.3−1 COMMON BERTHING MECHANISM COORDINATE SYSTEM

3.1.4 ENVELOPE INTERFACES

The Passive CBM static envelope is shown in Figure 3.1.4−1, Static Envelope of Passive CBM (Side View), and Figure 3.1.4−2, Static Envelope of Passive CBM (End View). The Active CBM static envelope on an axial port without thermal/debris cover is shown in Figure 3.1.4−3, Static Envelope of Active CBM on Axial Port Without Thermal/Debris Cover (Side View), and Figure 3.1.4−4, Static Envelope of Active CBM on Axial Port Without Thermal/Debris Cover (End View). The Active CBM static envelope on an axial port with thermal/debris cover is shown in Figure 3.1.4−5, Static Envelope of Active CBM on Axial Port With Thermal/Debris Cover (Side View). Figure 3.1.4−5.1 and Figure 3.1.4−5.2 show the node 2 forward and the node 3 nadir end cone secondary structure interface with the thermal/debris skirt. The Active CBM static envelope on a resource node radial port without thermal/debris cover is shown in Figure 3.1.4−6, Static Envelope of Active CBM on Resource Node Radial Port Without Thermal/Debris Cover. The Active CBM static envelope on a resource node radial port with thermal/debris covers closed is shown in Figure 3.1.4−7, Static Envelope of Active CBM on Resource Node Radial Port With Thermal/Debris Covers Closed. The Active CBM static and dynamic envelope on a node radial port with thermal/debris covers opened and skirts are shown in Figures 3.1.4−7.1, 3.1.4−7.2, and 3.1.4−7.3, Static and Dynamic Envelopes of Active CBM on Resource Node with Thermal/Debris Covers Open and Skirts, Section A−A, and Section B−B. The Active CBM static envelope on a JEM radial port without thermal/debris cover is shown in Figure 3.1.4−8, Static Envelope of Active CBM on Japanese Experiment Module Radial Port Without Thermal/Debris Cover. The Active CBM static envelope on a JEM radial port with thermal/debris cover is shown in Figure 3.1.4−9, Static Envelope of Active CBM on Japanese Experiment Module Radial Port With Thermal/Debris Cover, Module−to−Module Utility Jumper Envelope Active and Passive CBM−to−Module Interface, Figure 3.1.4−10, and Module−to−Module Utility Jumper Envelope, (Section A−A), and Figure 3.1.4−11, Module−to−Module Utility Jumper Envelope, (Section B−B), Figure 3.1.4−12. CBM hardware (alignment guides, ready−to−latches, capture latch assemblies, and motor controllers) can be removed and stored after berthing if the hardware is identified to interfere with jumper installation.

For CBMs using the Centerline Berthing Camera System (CBCS), see SSP 41015, Part 2, paragraph 3.1.4.5 for stay out envelope necessary for camera viewing purposes. For applicability of which CBMs this applies to, see SSP 41015 Part 1 paragraph 3.2.1.1.2.3.

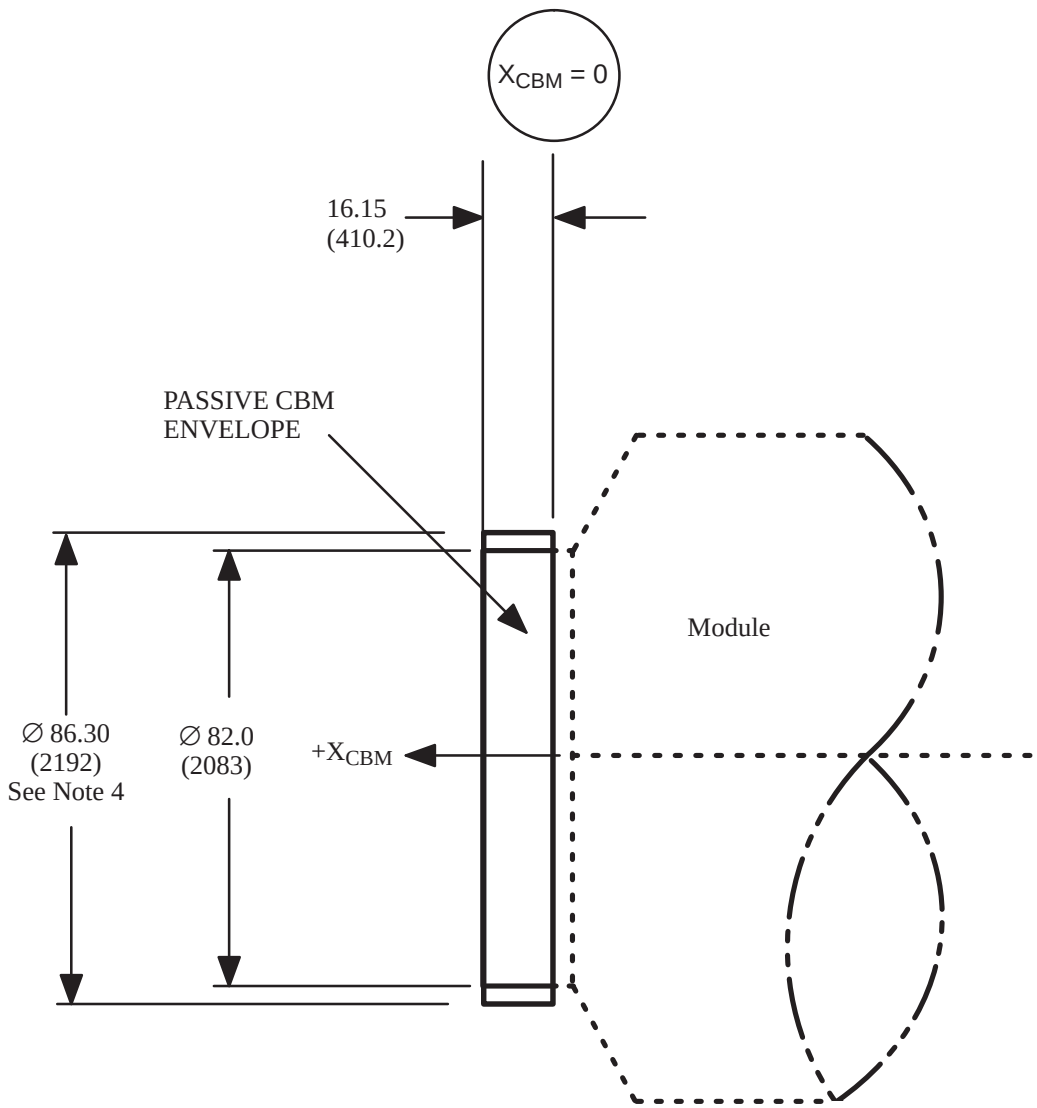

NOTE: 1) Envelope includes 5 inches (127) of space for alignment guides.
2) See Figures 3.1.4−10, 3.1.4−11, and 3.1.4−12 for the allowable penetrations into this envelope for utility jumpers/hardware.
3) See Figure 3.3.2.1.2−1 for CBM envelope from X_{CBM} = 0 to module feed thru plane.
4) Envelope includes PCBM Skirt for PEs (not applicable to PMAs).

FIGURE 3.1.4−1 STATIC ENVELOPE OF PASSIVE CBM (SIDE VIEW)

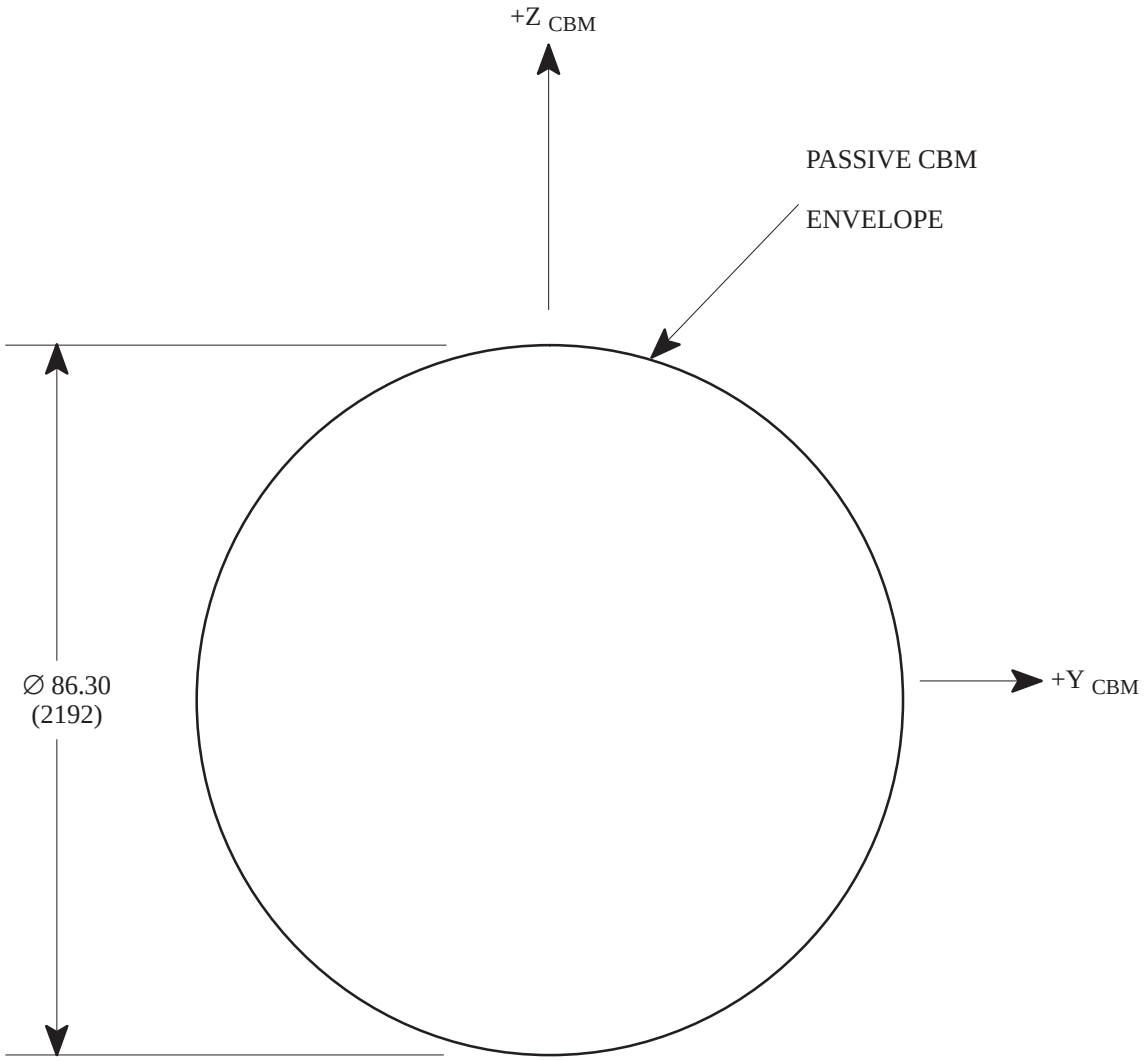

NOTES

1: See Figures 3.1.4−10 and 3.1.4−11 for the allowable penetrations into this envelope for utility jumpers in the berthed condition.

2: Envelope includes PCBM skirt for Pressurized Elements.

FIGURE 3.1.4−2 STATIC ENVELOPE OF PASSIVE COMMON BERTHING MECHANISM (END VIEW)

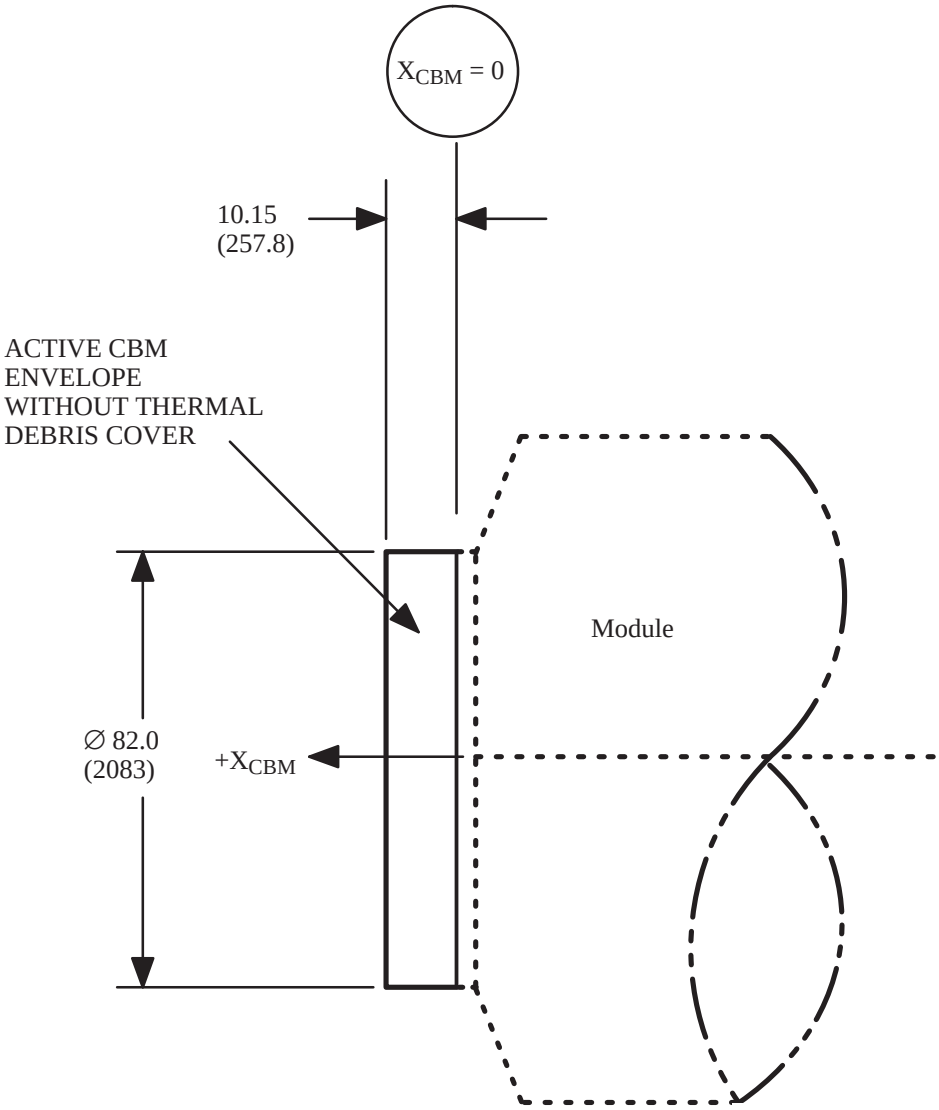

NOTE: 1) Envelope includes 5 inches (127) of space for alignment guides.
2) See Figures 3.1.4−10 and 3.1.4−11 for the allowable penetrations into this envelope for utility jumpers/hardware.
3) See Figure 3.3.2.1.2−1 for CBM envelope from X_{CBM} = 0 to module feed thru plane.

FIGURE 3.1.4−3 STATIC ENVELOPE OF ACTIVE CBM ON AXIAL PORT WITHOUT THERMAL/DEBRIS COVER (SIDE VIEW)

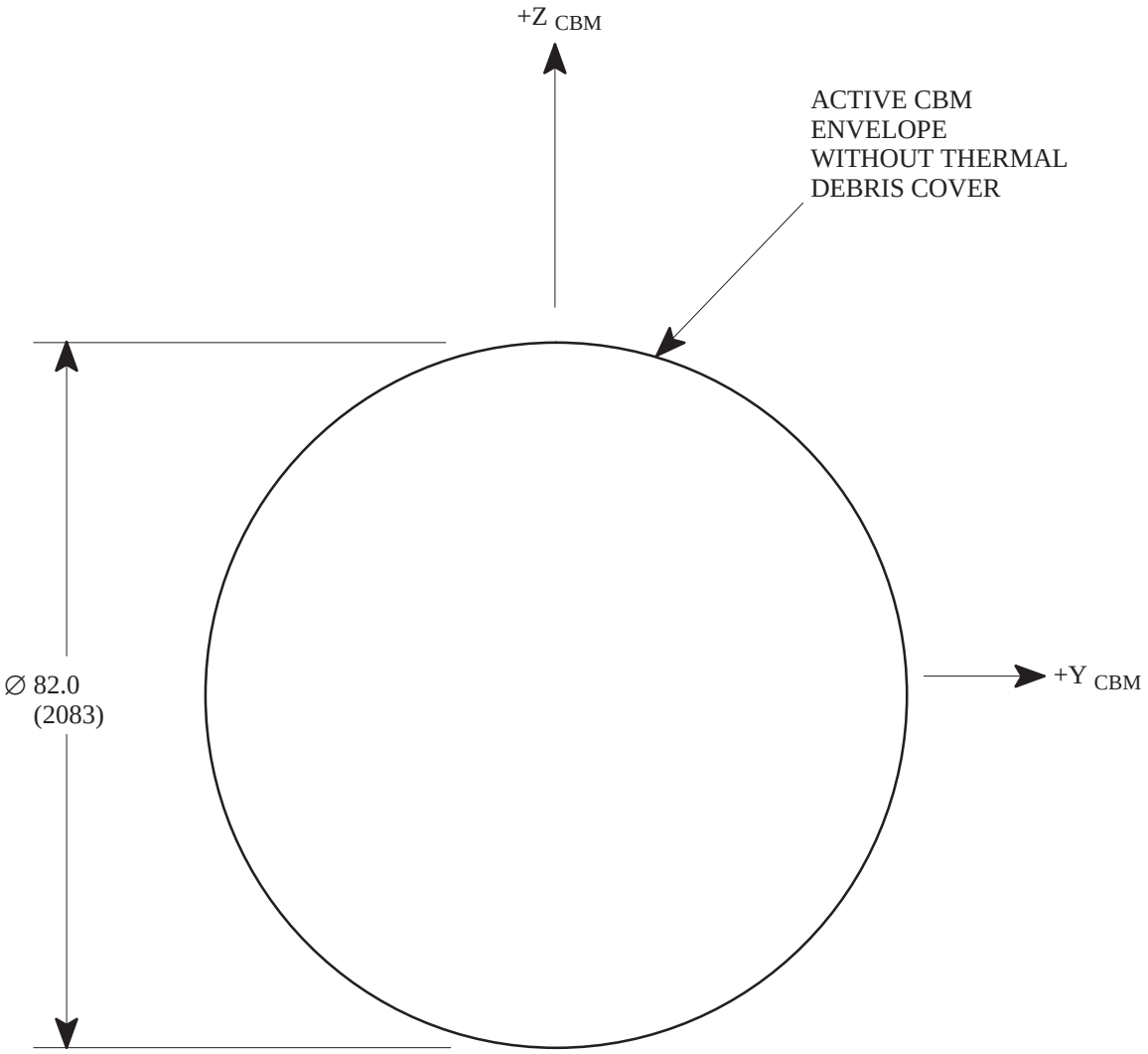

NOTE: See Figures 3.1.4−10 and 3.1.4−11 for the allowable penetrations into this envelope for utility jumpers in the berthed condition.

FIGURE 3.1.4−4 STATIC ENVELOPE OF ACTIVE COMMON BERTHING MECHANISM ON AXIAL PORT WITHOUT THERMAL/DEBRIS COVER (END VIEW)

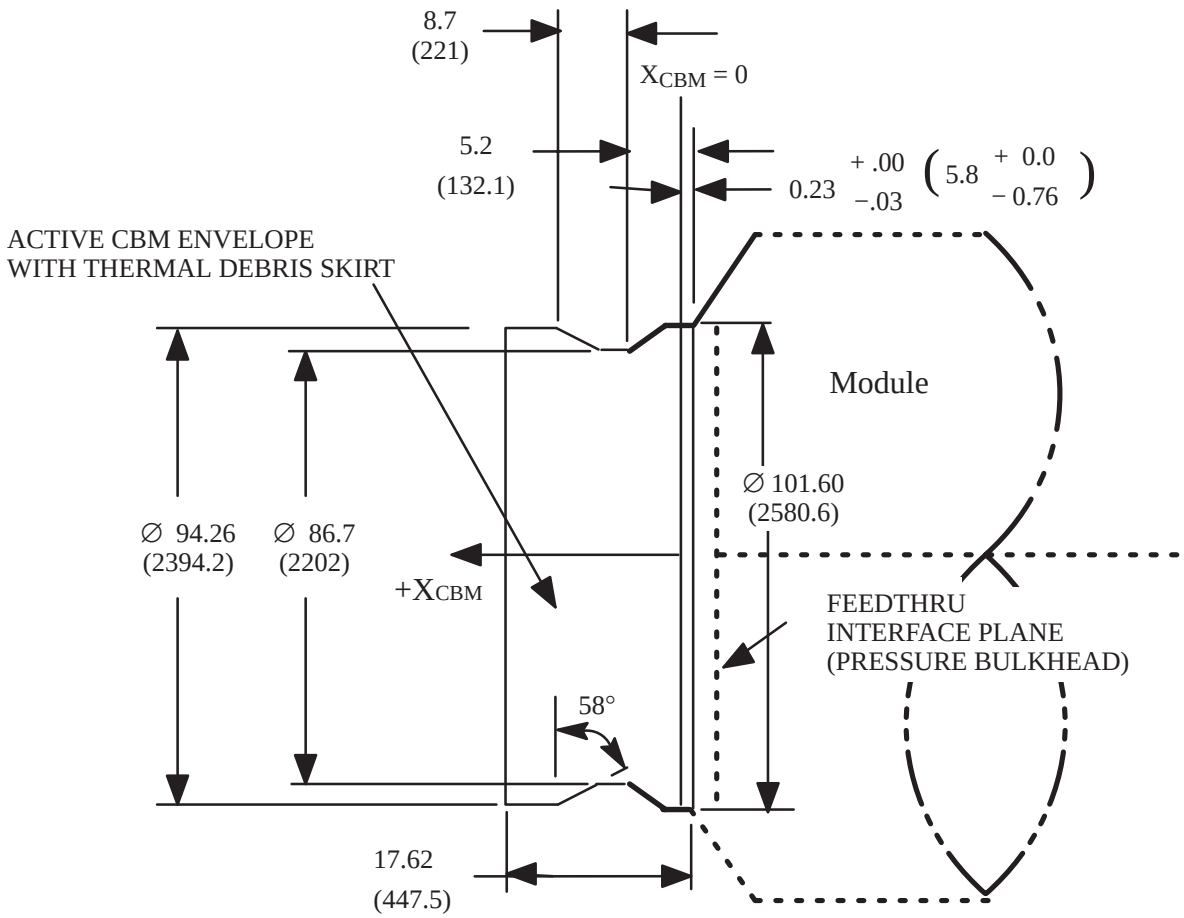

NOTE: 1) Deleted

2) See Figures 3.1.4−10, 3.1.4−11, and 3.1.4−12 for the allowable penetrations into this envelope for utility jumpers/hardware.

3) See Figure 3.3.2.1.2−1 for the CBM envelope from X_{CBM} = 0 to module feed thru plane.

FIGURE 3.1.4−5 STATIC ENVELOPE OF ACTIVE CBM ON AXIAL PORT WITH METEOROID/DEBRIS SKIRT (SIDE VIEW)

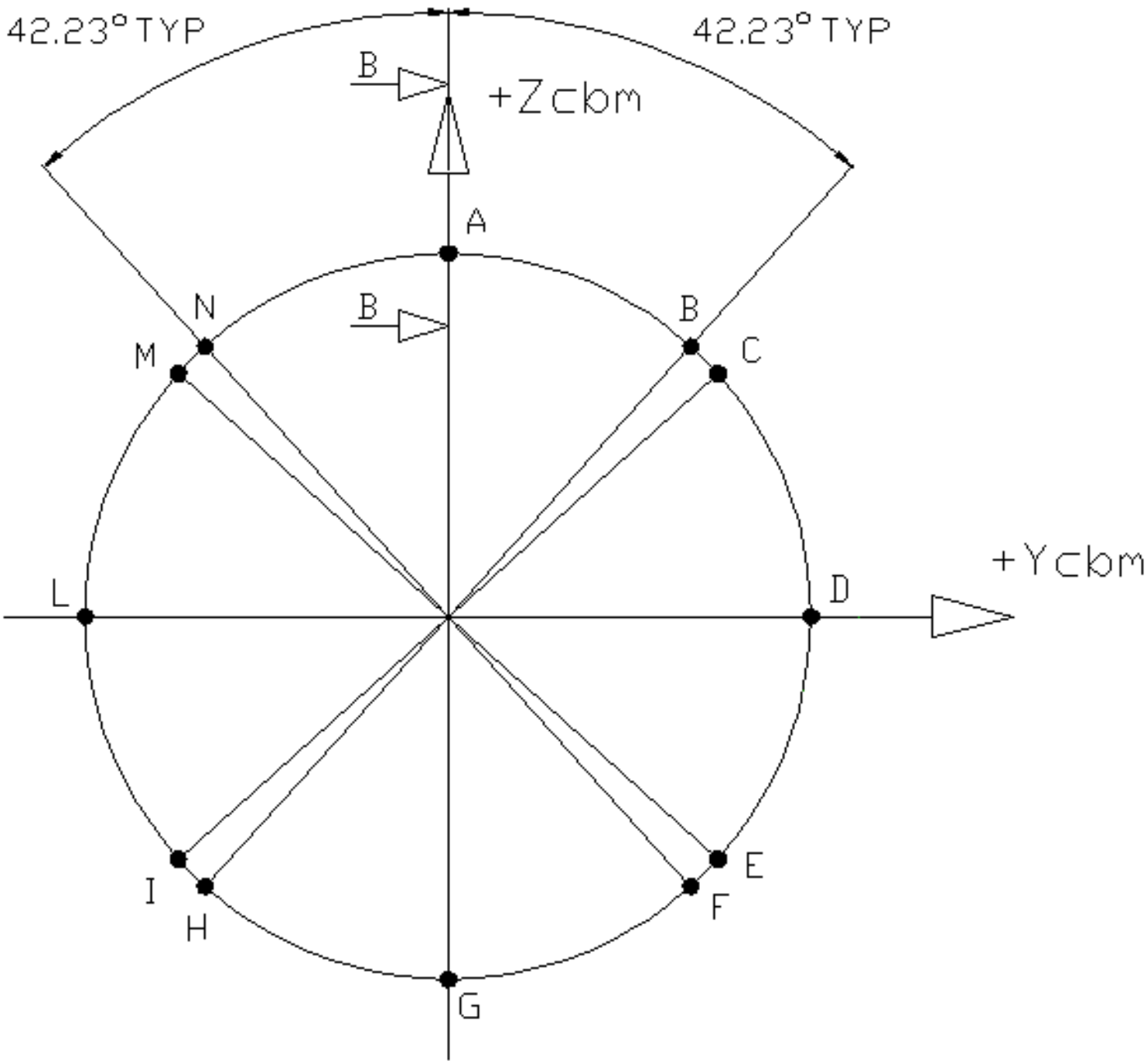

FIGURE 3.1.4−5.1 ANGULAR POSITION OF THERMAL DEBRIS / SKIRT ATTACH POINTS

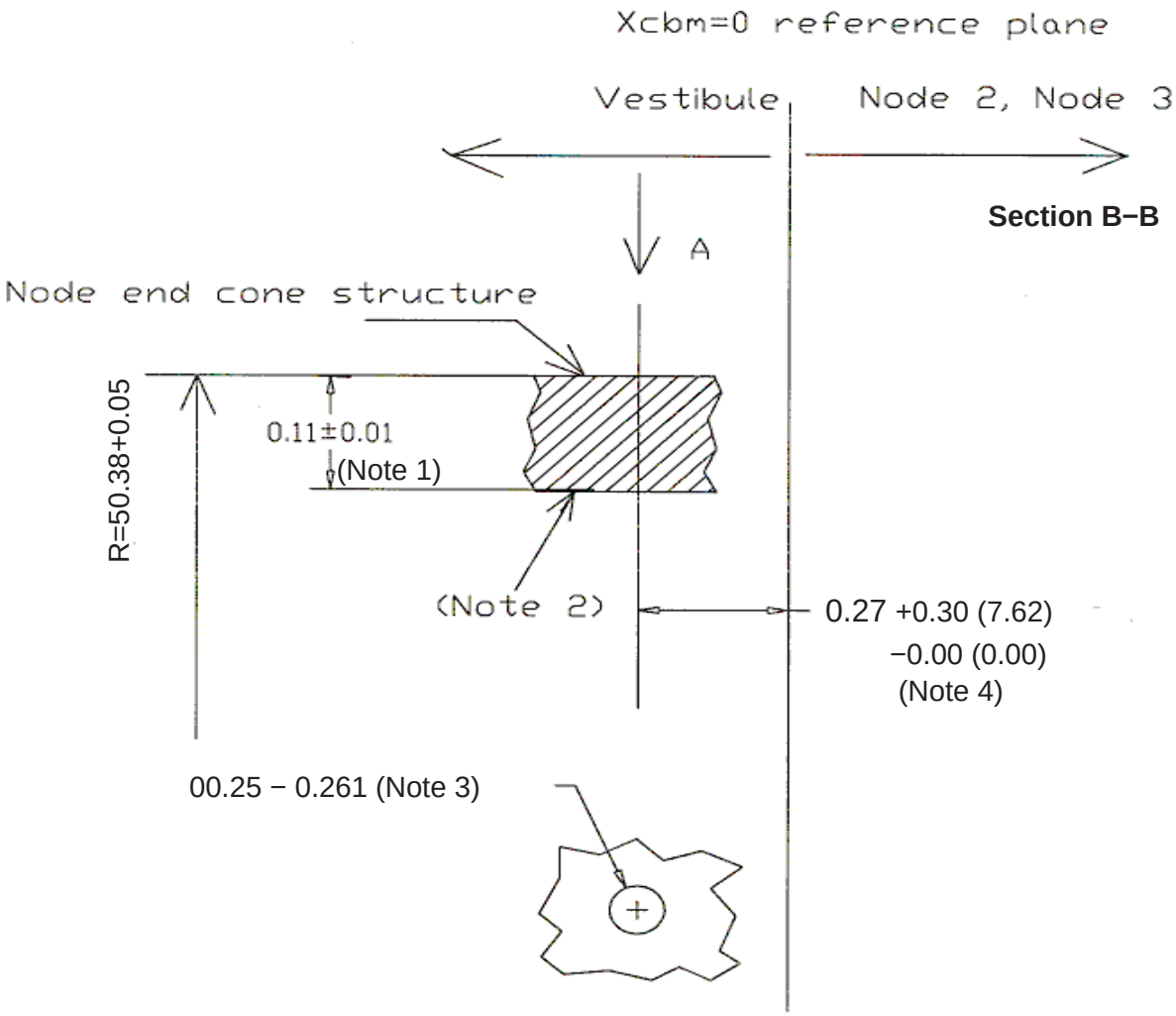

View A

Note 1: Local thickness in attachment area.
Note 2: Anchor Nut in this side. (MS 210 60L4)
Note 3: Minimum distance between hole center and end cone secondary structure edge shall be twice the hole diameter.
Note 4: Distance between hole center and Xcbm= 0 reference plane.

FIGURE 3.1.4−5.2 AXIAL AND RADIAL POSITION OF THERMAL / DEBRIS SKIRT ATTACH POINTS

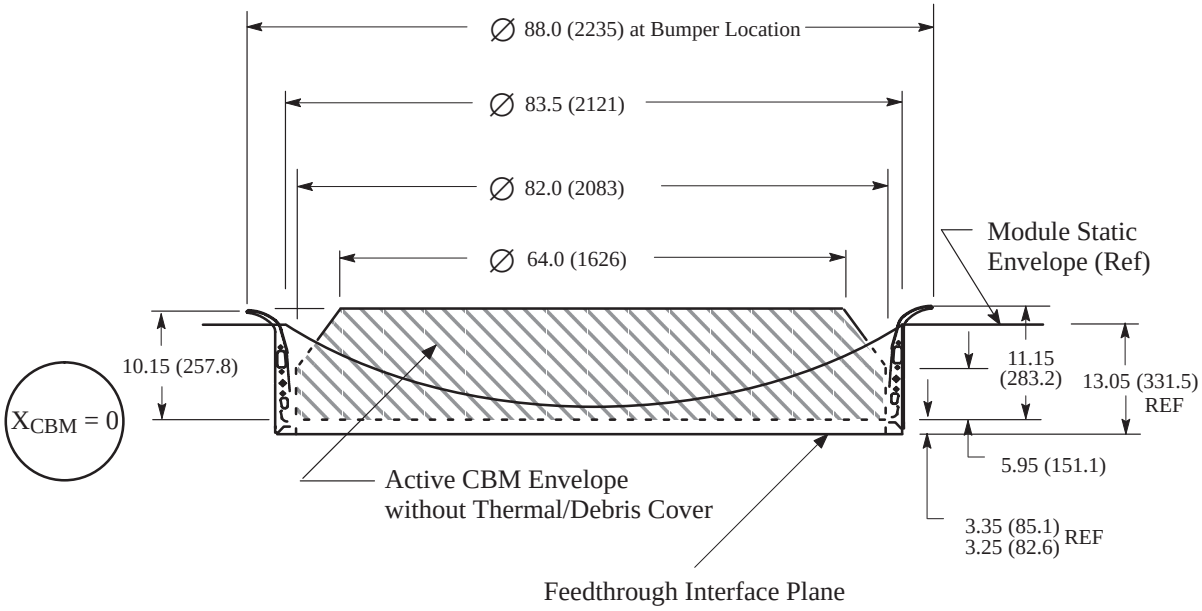

NOTE: 1) Envelope includes 5 inches (127) of space for alignment guides.

2) See Figures 3.1.4−10 and 3.1.4−11 for the allowable penetrations into this envelope for utility jumpers/hardware.

3) See Figure 3.3.2.1.2−1 for CBM envelope from X_{CBM} = 0 to module feed thru plane.

FIGURE 3.1.4−6 STATIC ENVELOPE OF ACTIVE CBM ON RESOURCE NODE RADIAL PORT WITHOUT THERMAL/DEBRIS COVER

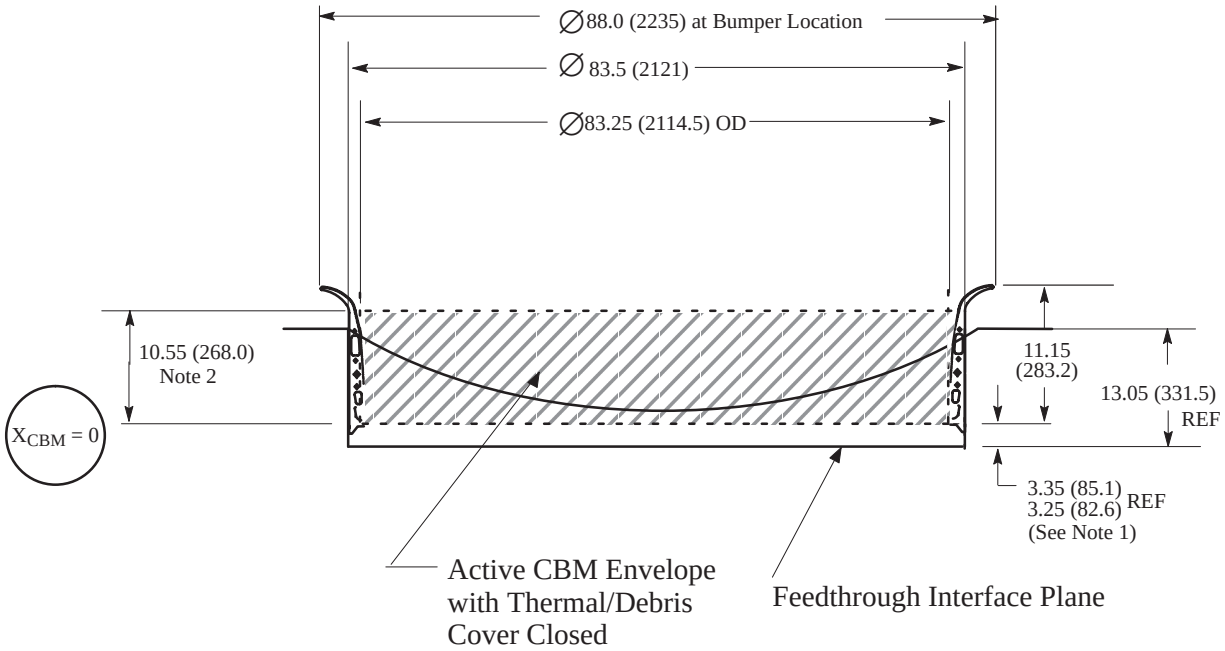

NOTE:
1) See Figure 3.3.2.1.2−1 for the CBM envelope from X_{CBM} = 0 to module feedthrough plane.
2) Highest point (10.55) at the alignment guides only. Petal configuration detail not provided.
3) Deleted

FIGURE 3.1.4−7 STATIC ENVELOPE OF ACTIVE CBM ON RESOURCE NODE RADIAL PORT WITH THERMAL/DEBRIS COVERS CLOSED

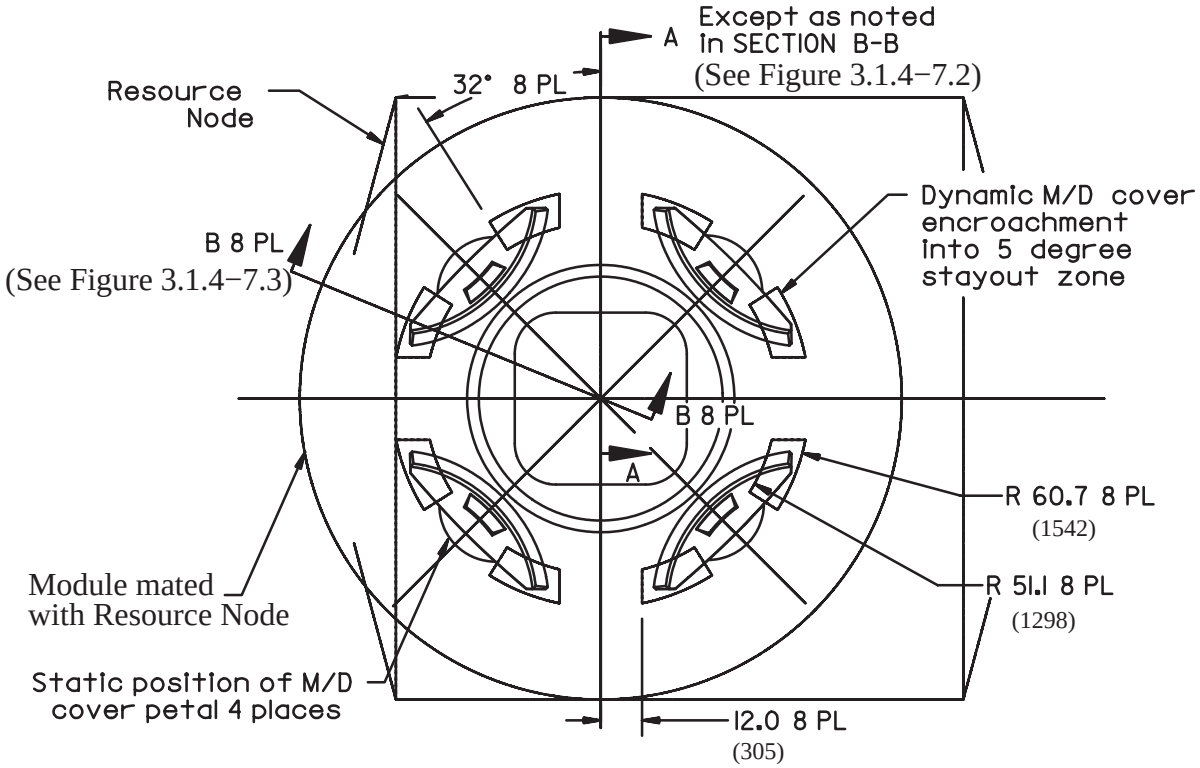

FIGURE 3.1.4−7.1 STATIC AND DYNAMIC ENVELOPE OF ACTIVE CBM ON RESOURCE NODE RADIAL PORT WITH THERMAL/DEBRIS COVERS OPEN AND SKIRTS

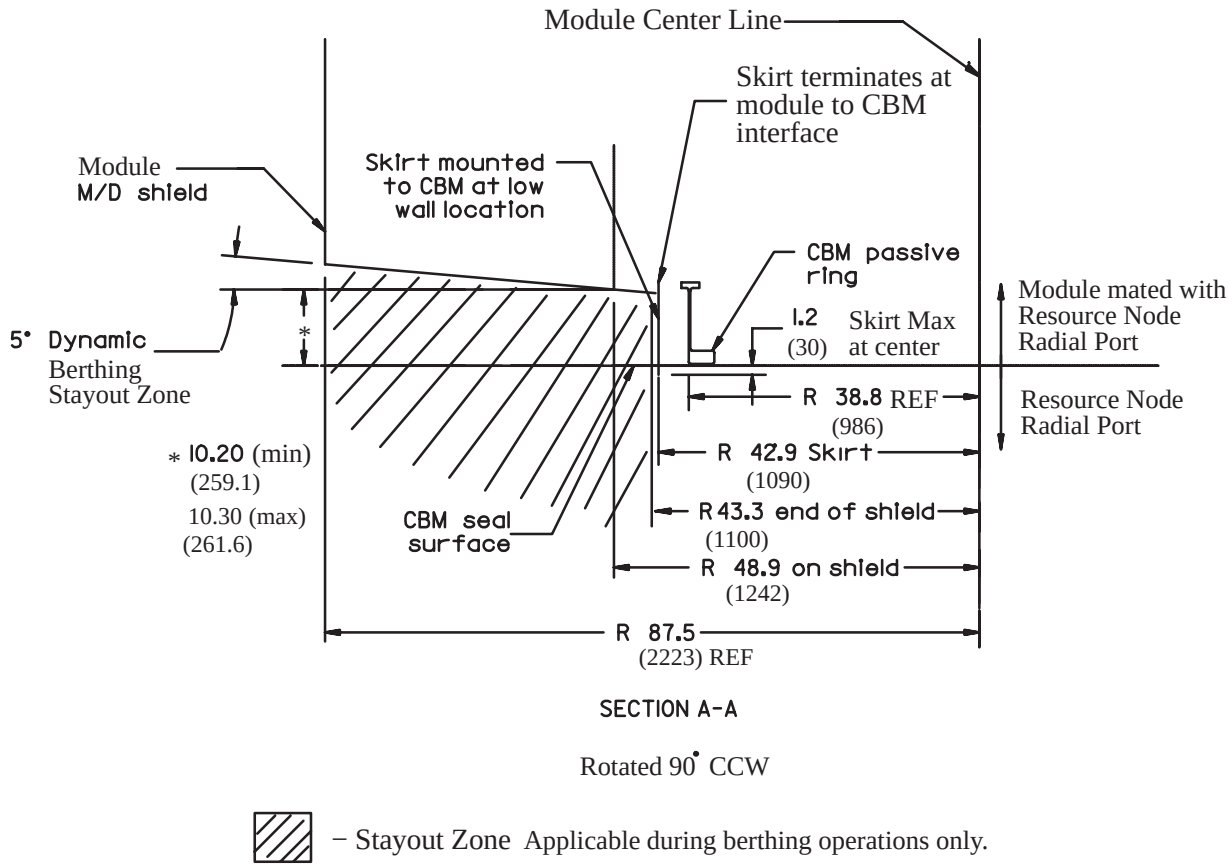

FIGURE 3.1.4−7.2 STATIC AND DYNAMIC ENVELOPE OF ACTIVE CBM ON RESOURCE NODE RADIAL PORT WITH THERMAL/DEBRIS COVERS OPEN AND SKIRTS (SECTION B−B)

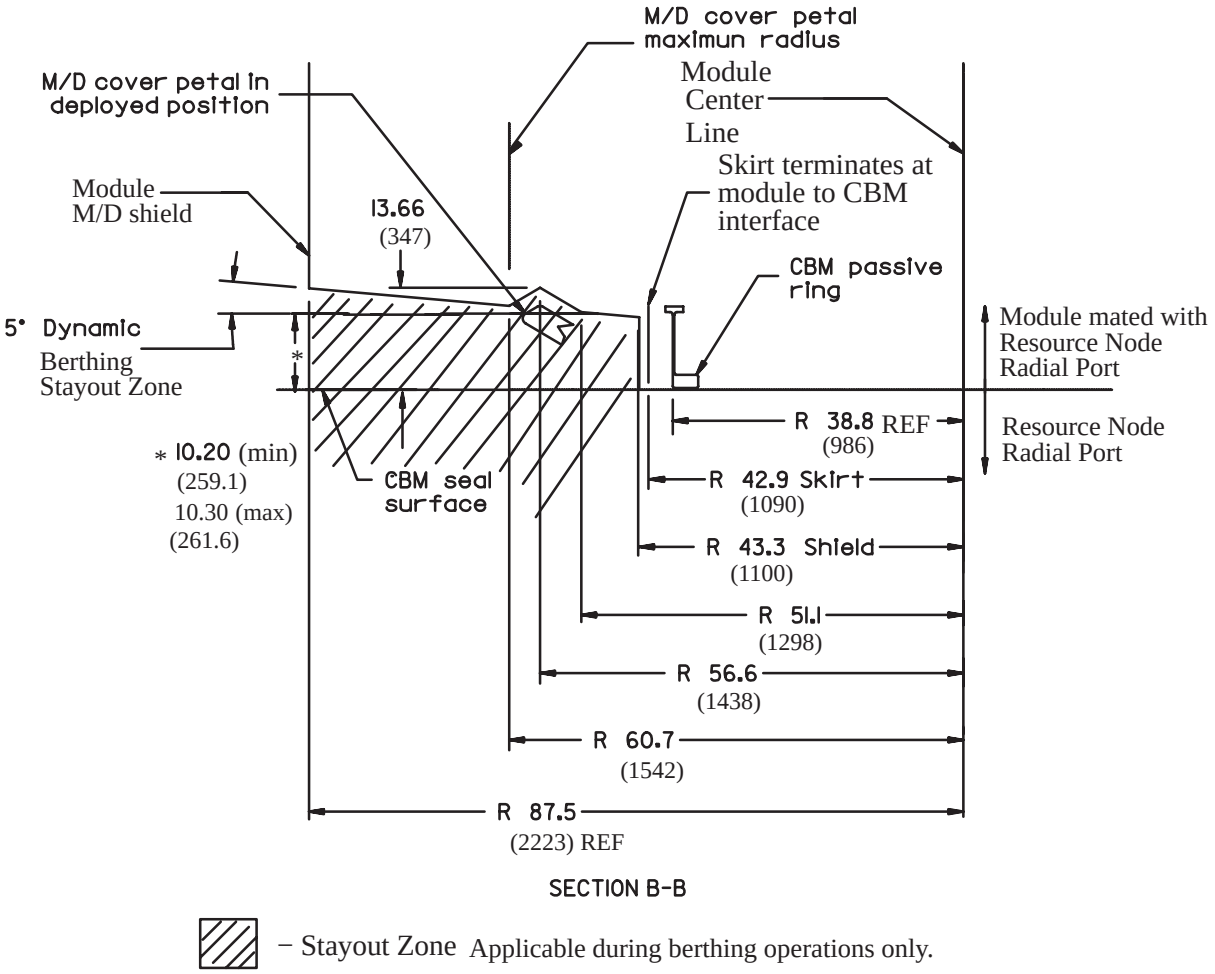

FIGURE 3.1.4−7.3 STATIC AND DYNAMIC ENVELOPE OF ACTIVE CBM ON RESOURCE NODE RADIAL PORT WITH THERMAL/DEBRIS COVERS OPEN AND SKIRTS (SECTION B−B)

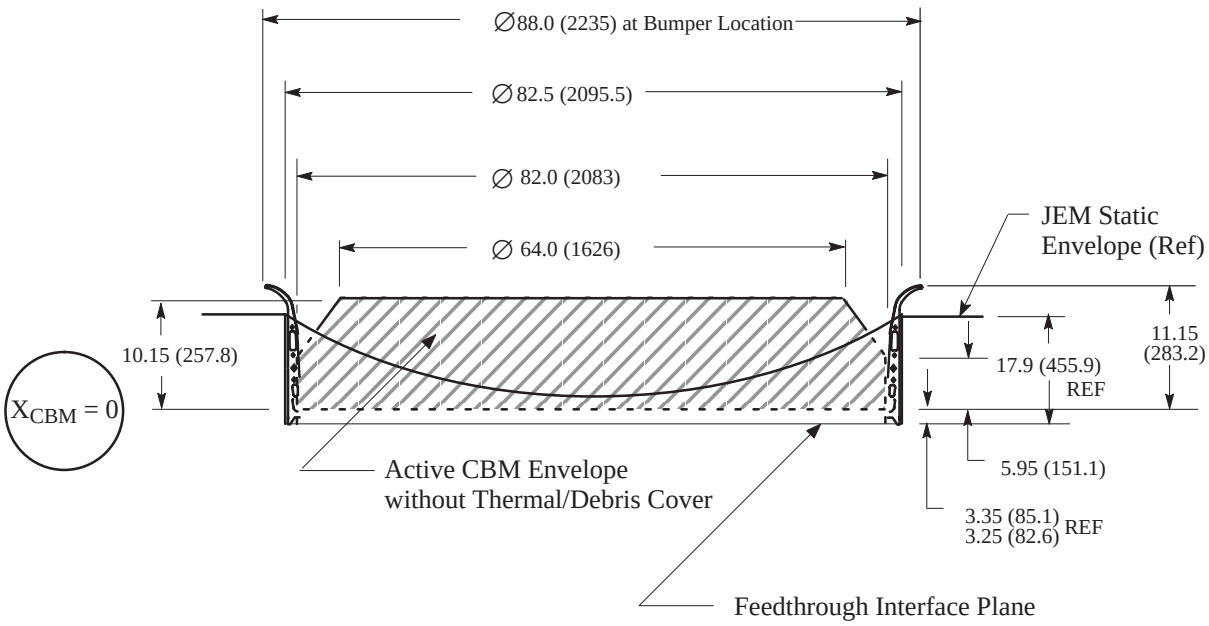

Note: 1) Envelope includes 5 inches (127) of space for alignment guides.

2) See Figures 3.1.4−10, 3.1.4−11, and 3.1.4−12 for the allowable penetrations into this envelope for utility jumpers/hardware.

3) See Figure 3.3.2.1.2−1 for CBM envelope from XCBM = 0 to module feed thru plane.

4) For top view of JEM ACBM radial port, see Figure 3A.2.1.1.1−1 of SSP 41004, Part 1.

FIGURE 3.1.4−8 STATIC ENVELOPE OF ACTIVE CBM ON JAPANESE EXPERIMENT MODULE RADIAL PORT WITHOUT THERMAL/DEBRIS COVER (SIDE VIEW)

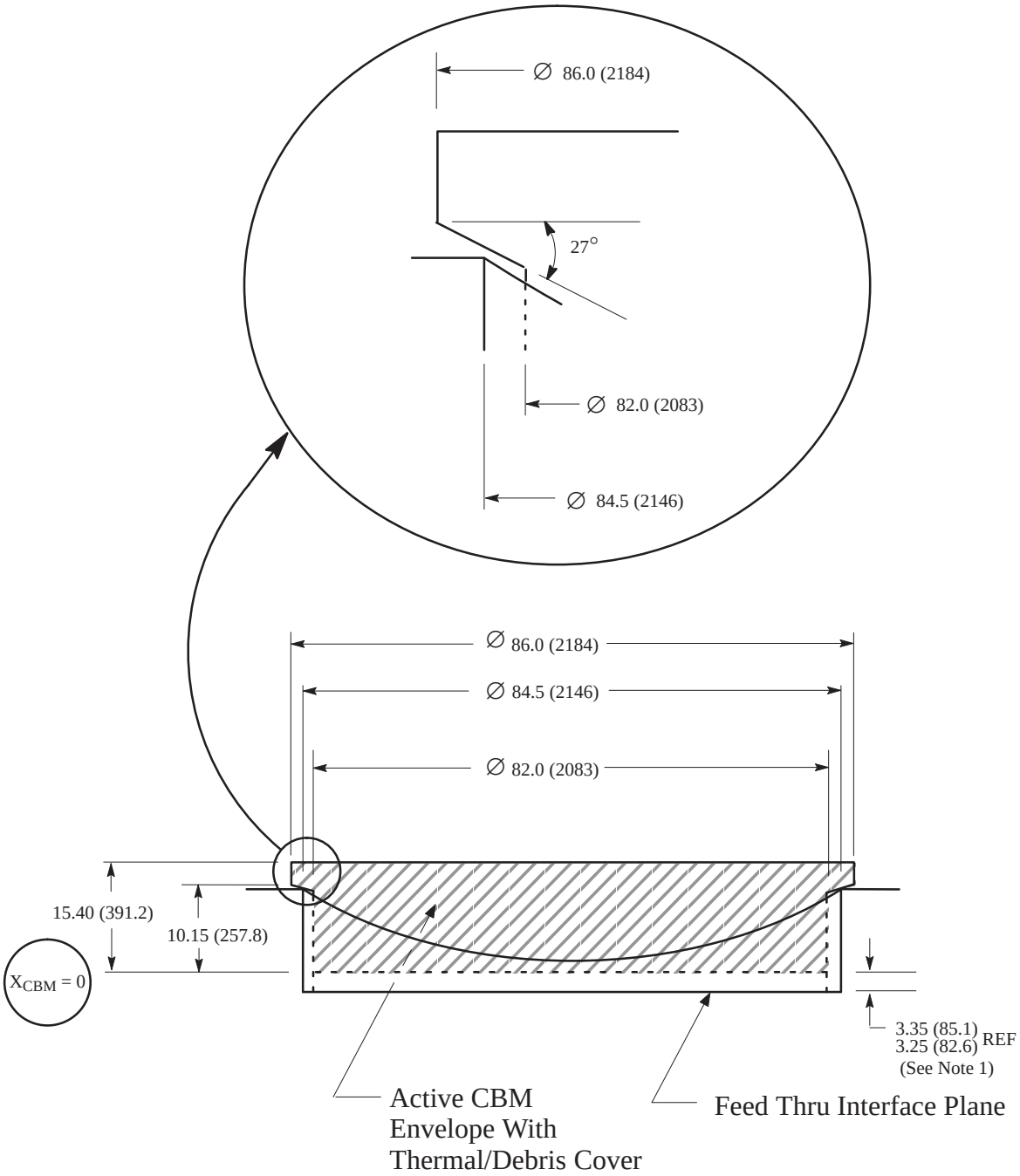

NOTE:
1) See Figure 3.3.2.1.2−1 for the CBM envelope from X_{CBM} = 0 to module feed thru plane.
2) This figure does not contain the new thermal/debris cover. The new cover is still being designed and will have to be incorporated through the Preliminary Interface Revision Notice (PIRN) process.
3) Deleted
4) This figure does not contain the new bumper.

FIGURE 3.1.4−9 STATIC ENVELOPE OF ACTIVE CBM ON JAPANESE EXPERIMENT MODULE RADIAL PORT WITH THERMAL/DEBRIS COVER

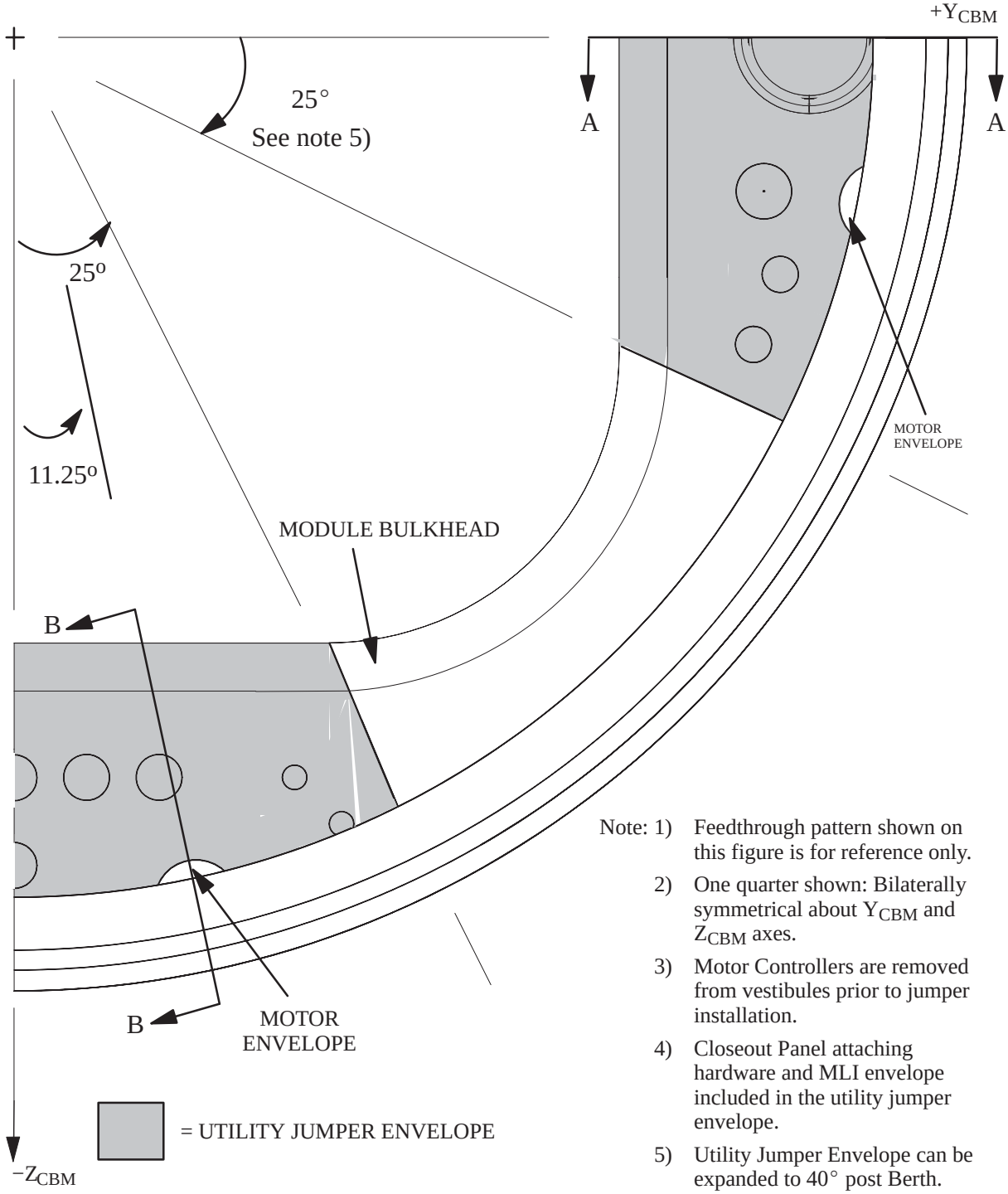

Note: 1) Feedthrough pattern shown on this figure is for reference only.

2) One quarter shown: Bilaterally symmetrical about Y_{CBM} and Z_{CBM} axes.

3) Motor Controllers are removed from vestibules prior to jumper installation.

4) Closeout Panel attaching hardware and MLI envelope included in the utility jumper envelope.

5) Utility Jumper Envelope can be expanded to 40° post Berth.

FIGURE 3.1.4−10 MODULE−TO−MODULE UTILITY JUMPER ENVELOPE ACTIVE AND PASSIVE CBM−TO−MODULE INTERFACE

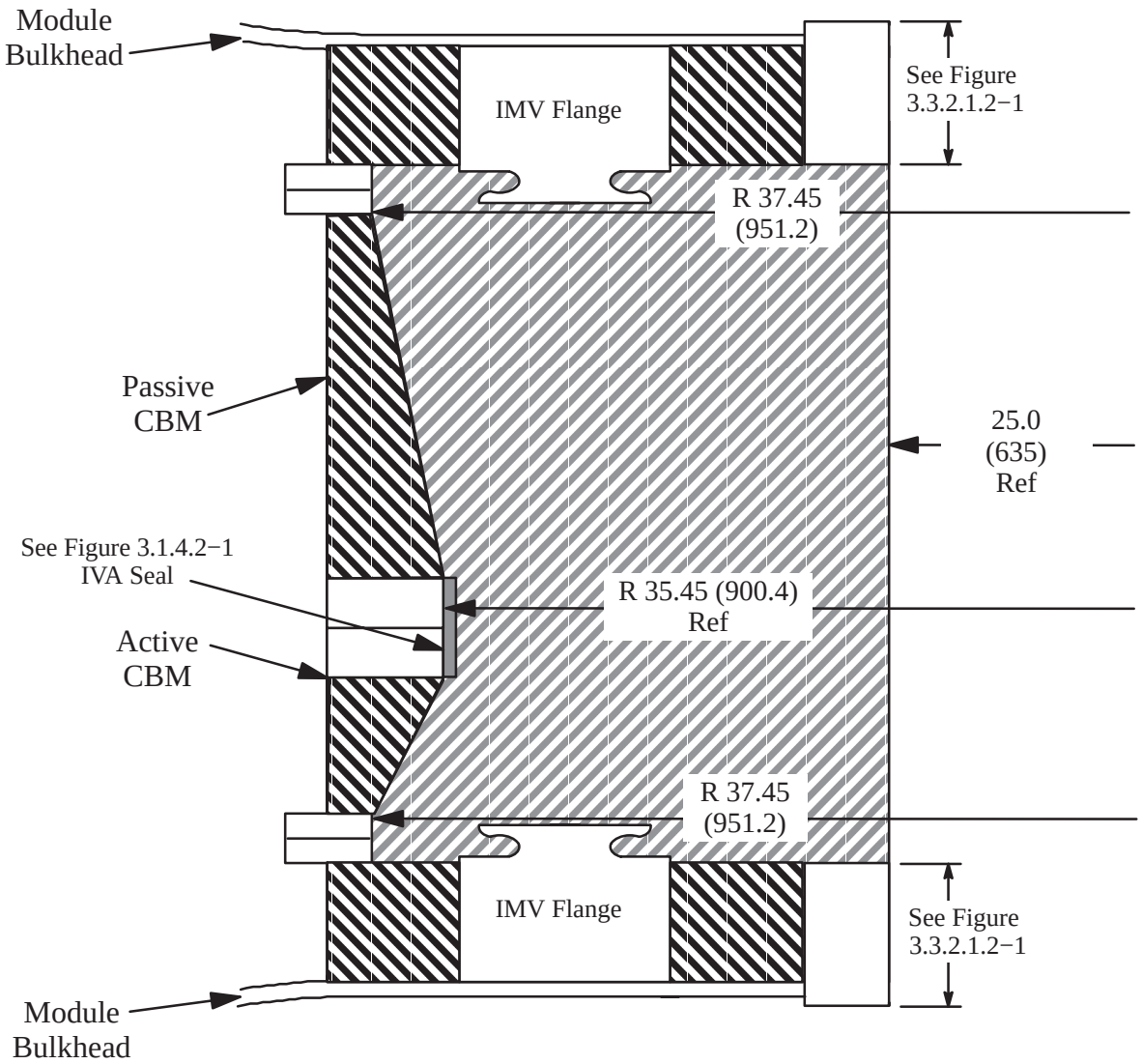

Note: Closeout panel attaching hardware and MLI envelope included in utility jumper envelope.

= UTILITY JUMPER ENVELOPE

= UTILITY JUMPER ENVELOPE, MODULE/CBM STRUCTURE MAY ENCROACH THIS AREA

FIGURE 3.1.4−11 MODULE−TO−MODULE UTILITY JUMPER ENVELOPE (SECTION A−A)

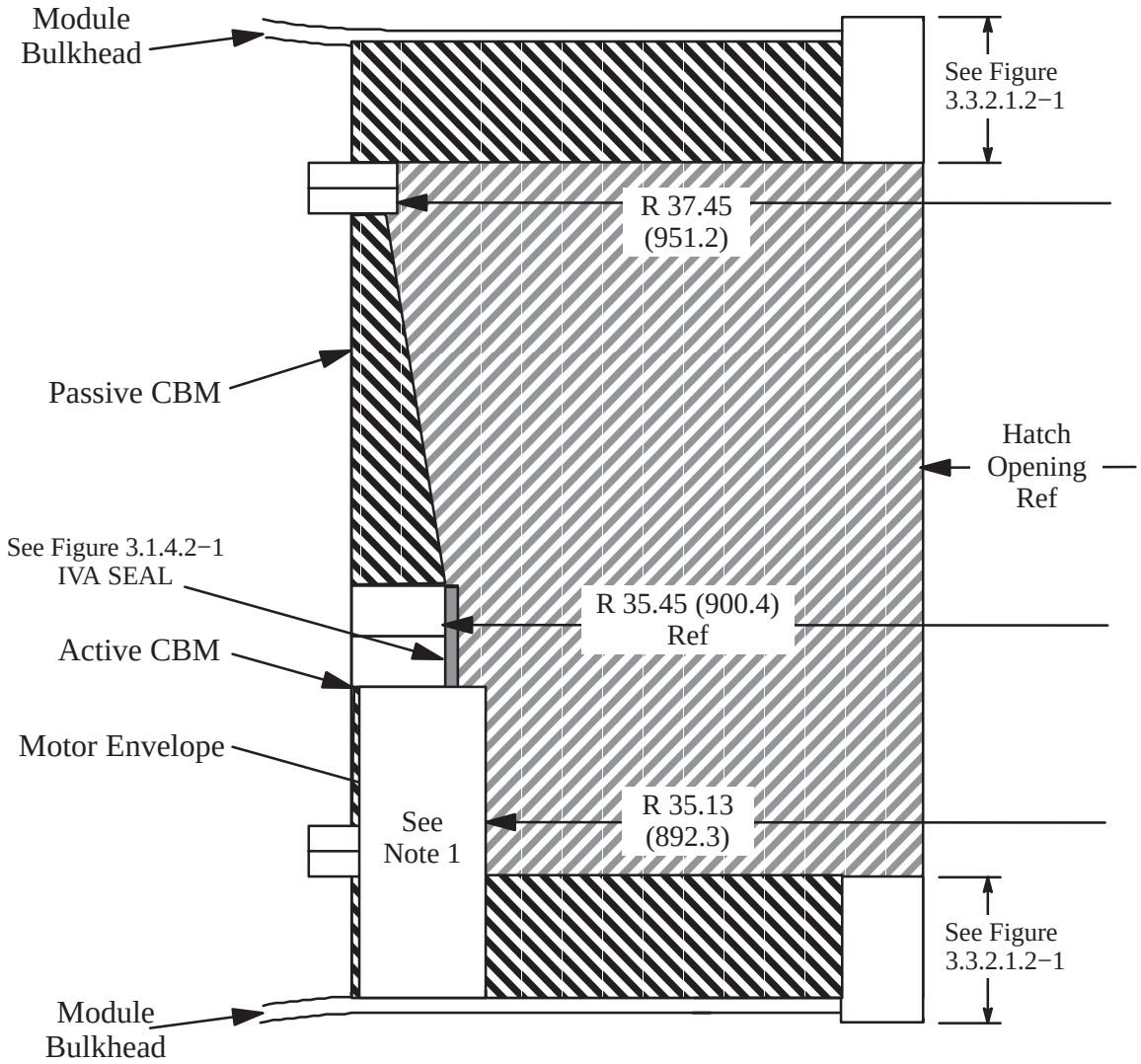

= UTILITY JUMPER ENVELOPE
See Note 2

= UTILITY JUMPER ENVELOPE, MODULE/CBM STRUCTURE MAY ENCROACH THIS AREA

Note 1: Envelope does not include motor connector and assorted cabling.

Note 2: Closeout panel attaching hardware and MLI envelope included in utility jumper envelope.

FIGURE 3.1.4−12 MODULE−TO−MODULE UTILITY JUMPER ENVELOPE (SECTION B−B)

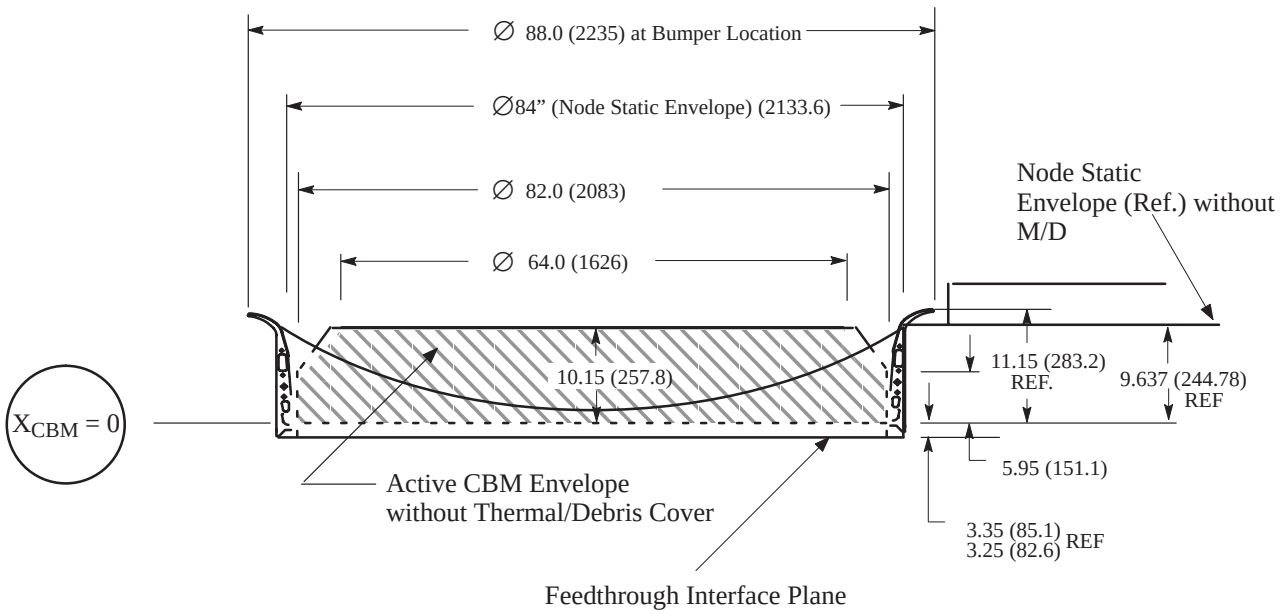

NOTE: 1) Envelope includes 5 inches (127) of space for alignment guides.

2) See Figures 3.1.4-10 and 3.1.4-11 for the allowable penetrations into this envelope for utility jumpers/hardware.

3) See Figure 3.3.2.1.2−1 for CBM envelope from X_{CBM} = 0 to module feed thru plane.

FIGURE 3.1.4−13 STATIC ENVELOPE OF ACTIVE CBM ASI NODES MODULE RADIAL PORTS WITHOUT THERMAL/DEBRIS COVER

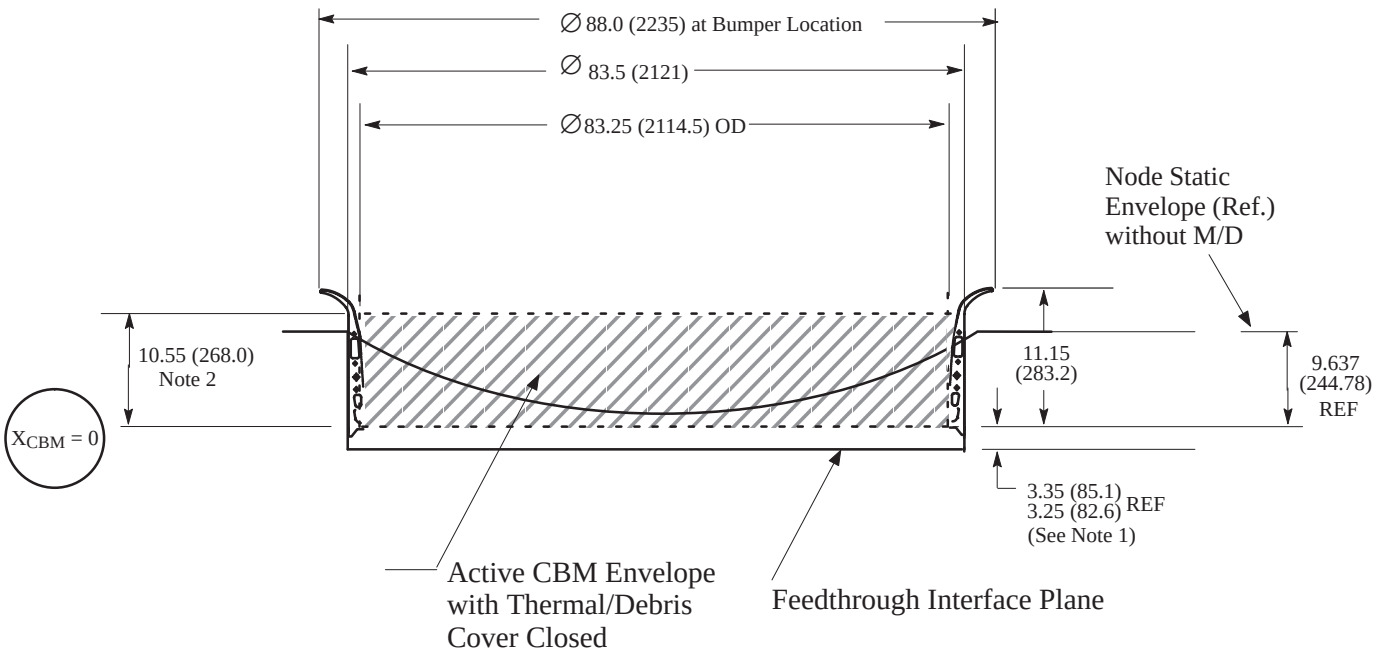

NOTE:
1) See Figure 3.3.2.1.2−1 for the CBM envelope from X_{CBM} = 0 to module feedthrough plane.
2) Highest point (10.55) at the alignment guides only. Petal configuration detail not provided.
3) Deleted

FIGURE 3.1.4−14 STATIC ENVELOPE OF ACTIVE CBM ON RESOURCE NODE RADIAL PORT WITH THERMAL/DEBRIS COVERS CLOSED

3.1.4.1 CBM HARDWARE ENVELOPES

Clearance envelopes for the alignment guides, capture latches, actuation system controller assembly (referred to as motor controller), powered bolt motors, and Ready-to-Latch are shown in Figure 3.1.4.1−1, Active CBM Clearance Envelope for Passive CBM Alignment Guides; Figure 3.1.4.1−2, Active CBM Clearance Envelope for Passive CBM Alignment Guides (View A−A); Figure 3.1.4.1−3, Active CBM Capture Latch Clearance Envelope; Figure 3.1.4.1−4, Active CBM Capture Latch Clearance Envelope (View A−A); Figure 3.1.4.1−5, Active CBM Capture Latch Clearance Envelope (View B−B); Figure 3.1.4.1−6, Motor controller Clearance Envelope; Figure 3.1.4.1−7, Typical Motor Controller Axial Hatch Beam Clearance Envelope (View A−A); Figure 3.1.4.1−8, Powered Bolt Centerline Locations; Figure 3.1.4.1−9, Powered Bolt Motor Clearance Envelope; Figure 3.1.4.1−10, Powered Bolt Motor Clearance Envelope (View A−A); Figure 3.1.4.1−11, Active CBM Ready-to-Latch Clearance Envelope; Figure 3.1.4.1−12, Ready-to-Latch Clearance Envelope (View A−A); and Figure 3.1.4.1−13, Ready-to-Latch Clearance Envelope (View B−B); Figure 3.1.4.1−14, Passive CBM Clearance Envelope for Active CBM Alignment Guides; Figure 3.1.4.1−15, Passive CBM Clearance Envelope for Active CBM Alignment Guides (View A−A); Figure 3.1.4.1−16, Active CBM Capture Latch and Fitting Clearance Envelope for Passive CBM; Figure 3.1.4.1−17, Passive CBM Capture Latch and Fitting Clearance Envelope (View A−A); Figure 3.1.4.1−18, Passive CBM Capture Latch and Fitting Clearance Envelope (View B−B); Figure 3.1.4.1−19, Motor Controller and M/D Center Cover Passive CBM Hardware Clearance Envelope; Figure 3.1.4.1−20, Motor Controller and M/D Center Cover PCBM Hardware Clearance Envelope (View D−D); Figure 3.1.4.1−21, Passive CBM Clearance Envelope for Powered Bolt Nut; and Figure 3.1.4.1−22, PCBM Clearance Envelope for Powered Bolt Nut (View E−E).

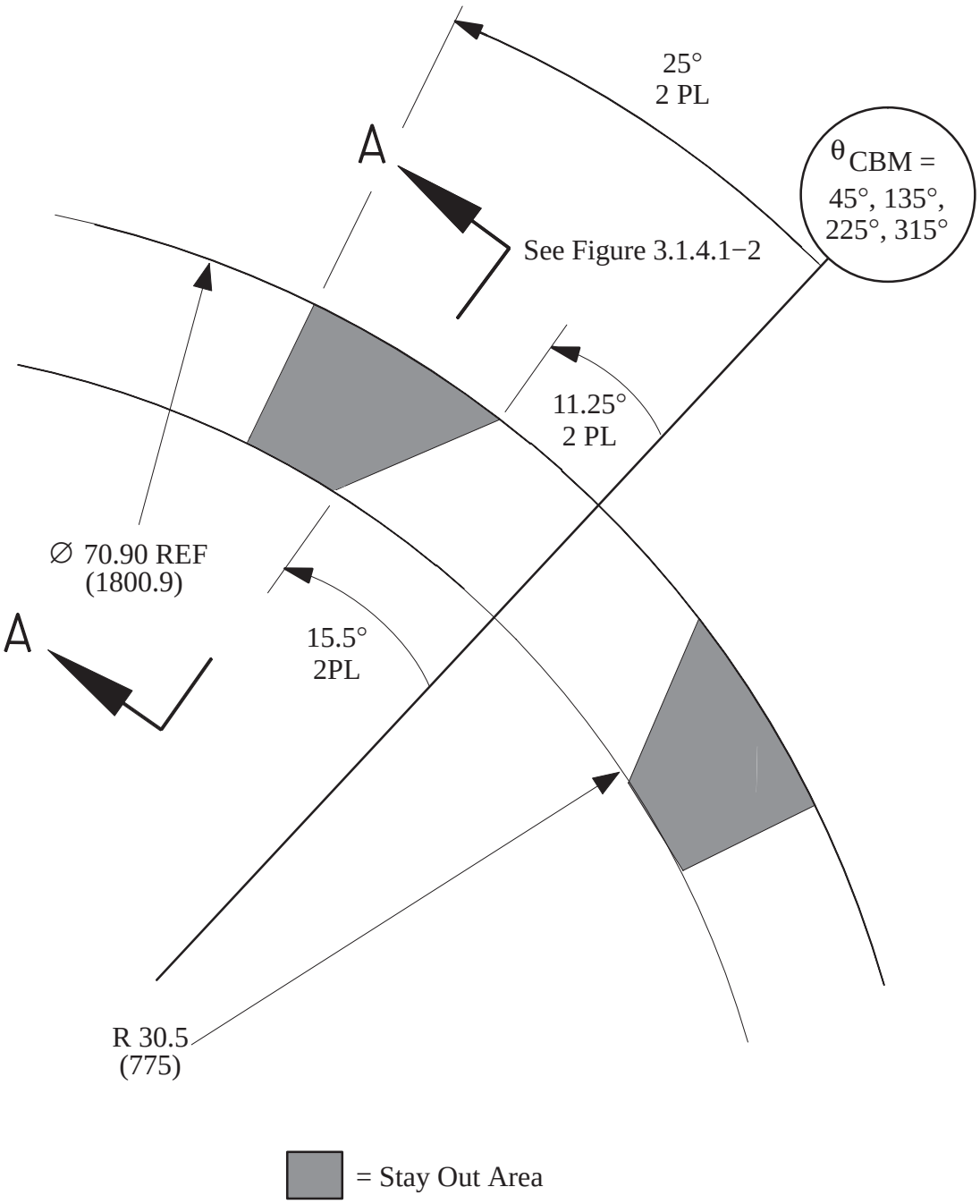

FIGURE 3.1.4.1−1 ACTIVE CBM CLEARANCE ENVELOPE FOR PASSIVE CBM ALIGNMENT GUIDES

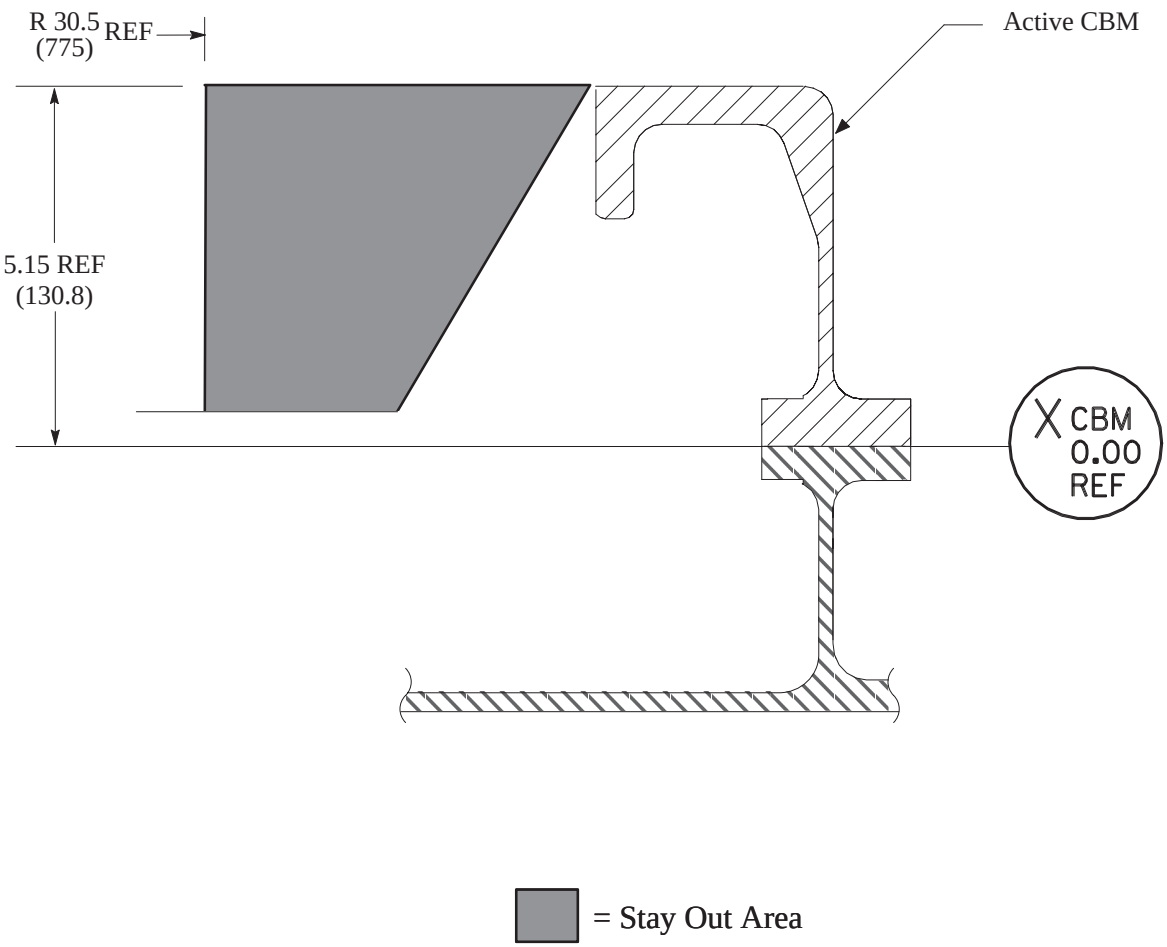

FIGURE 3.1.4.1−2 ACTIVE CBM CLEARANCE ENVELOPE FOR PASSIVE CBM ALIGNMENT GUIDES (VIEW A−A)

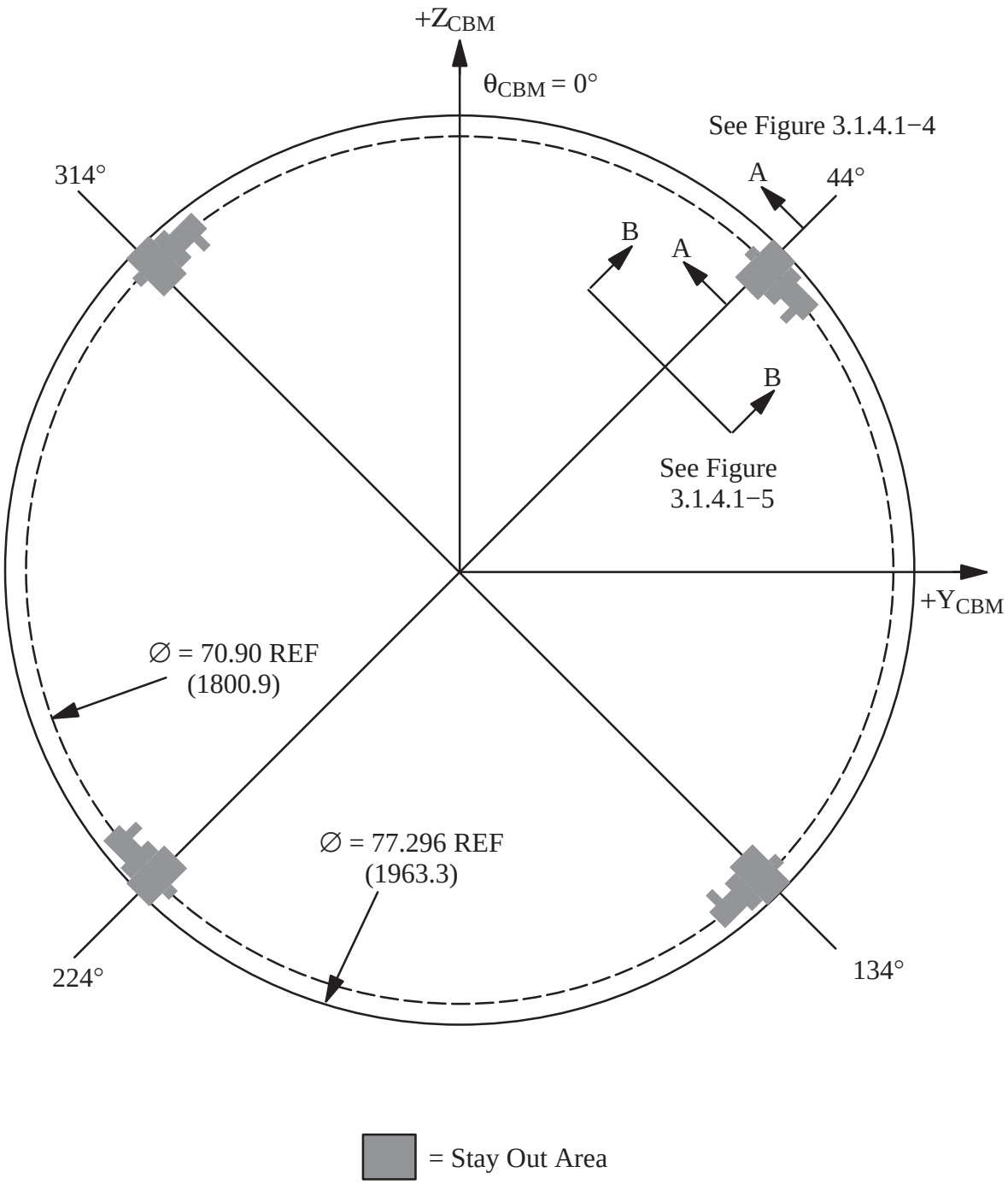

FIGURE 3.1.4.1−3 ACTIVE CBM CAPTURE LATCH CLEARANCE ENVELOPE

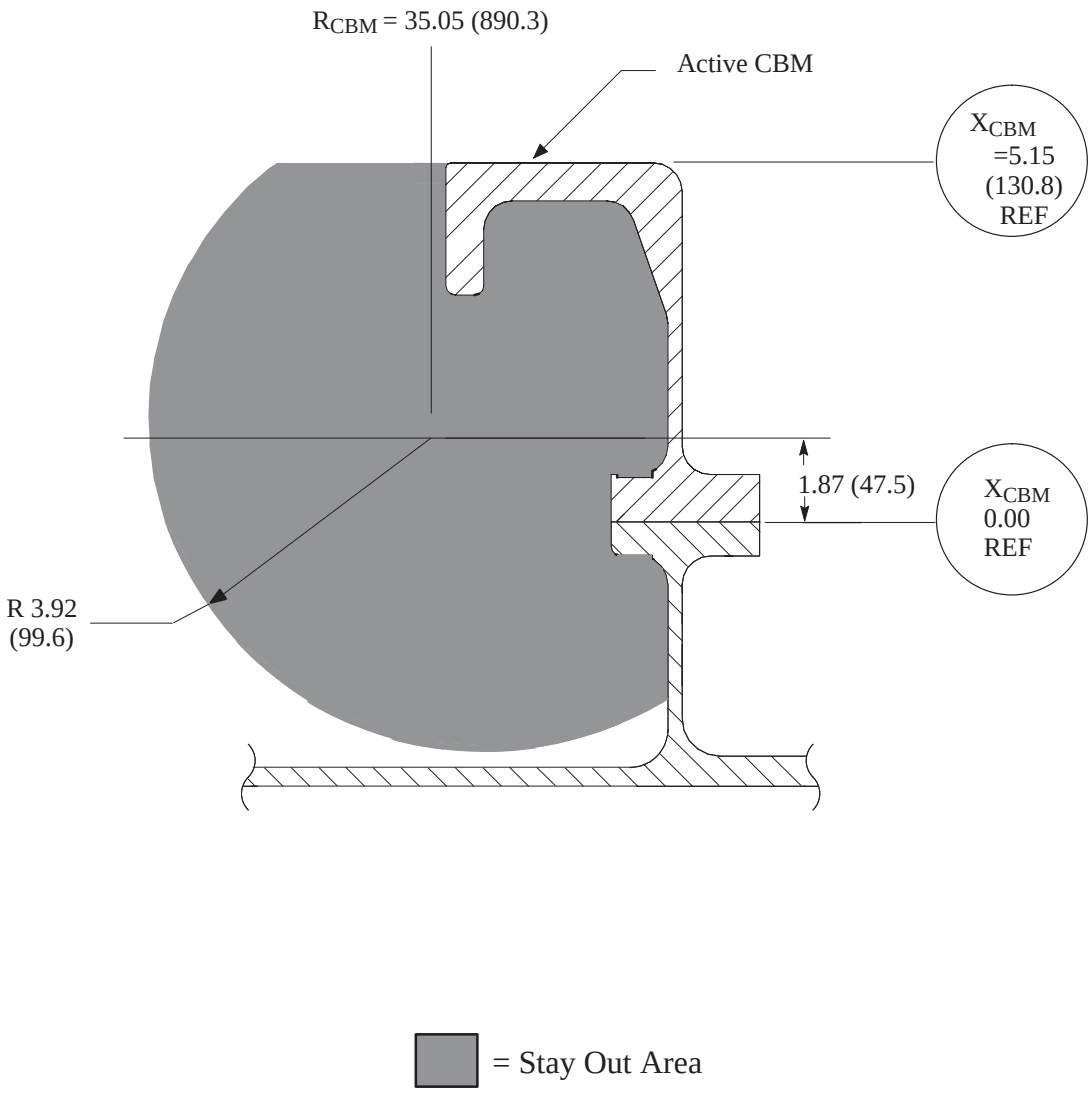

FIGURE 3.1.4.1−4 ACTIVE CBM CAPTURE LATCH CLEARANCE ENVELOPE (VIEW A−A)

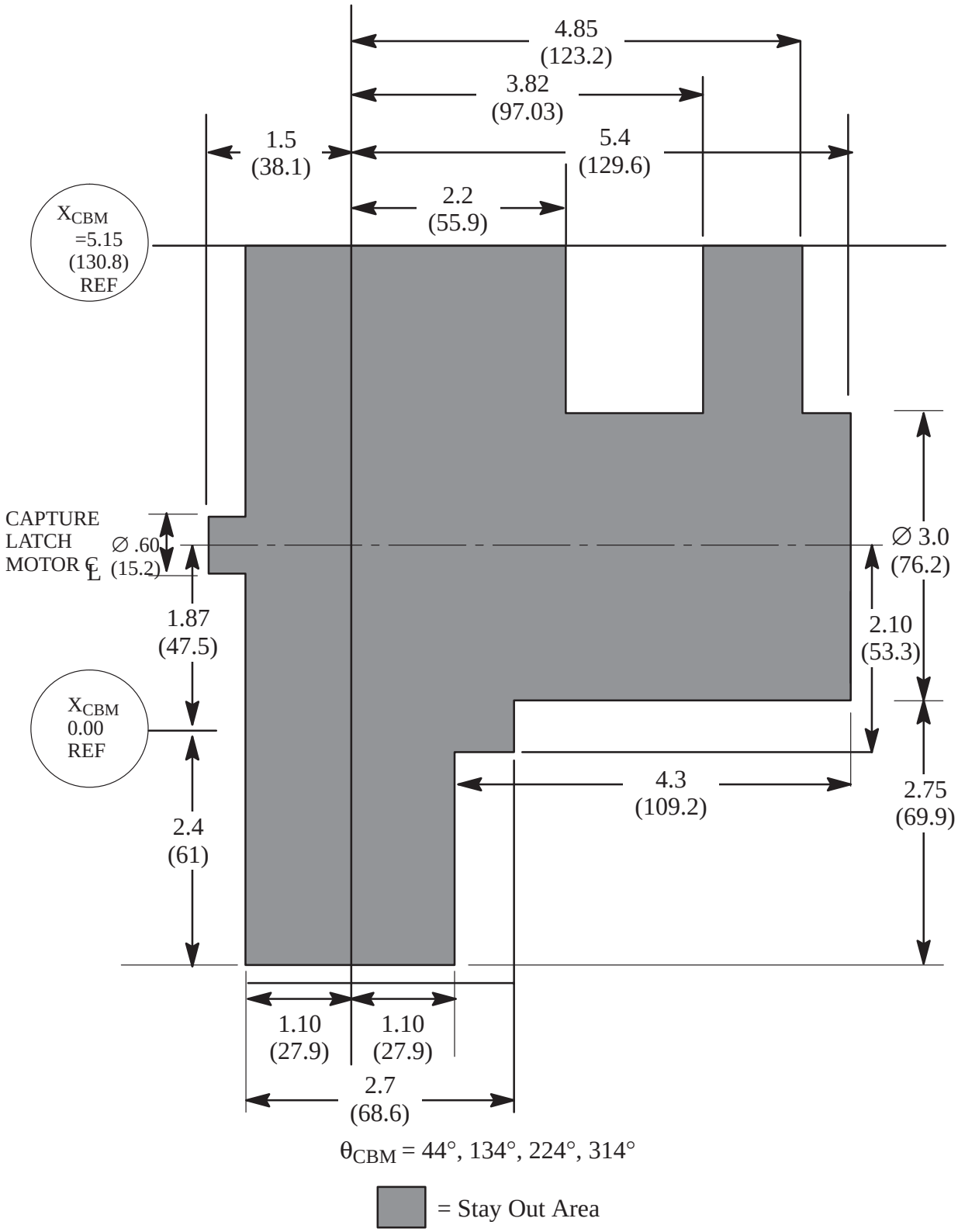

FIGURE 3.1.4.1−5 ACTIVE CBM CAPTURE LATCH CLEARANCE ENVELOPE (VIEW B−B)

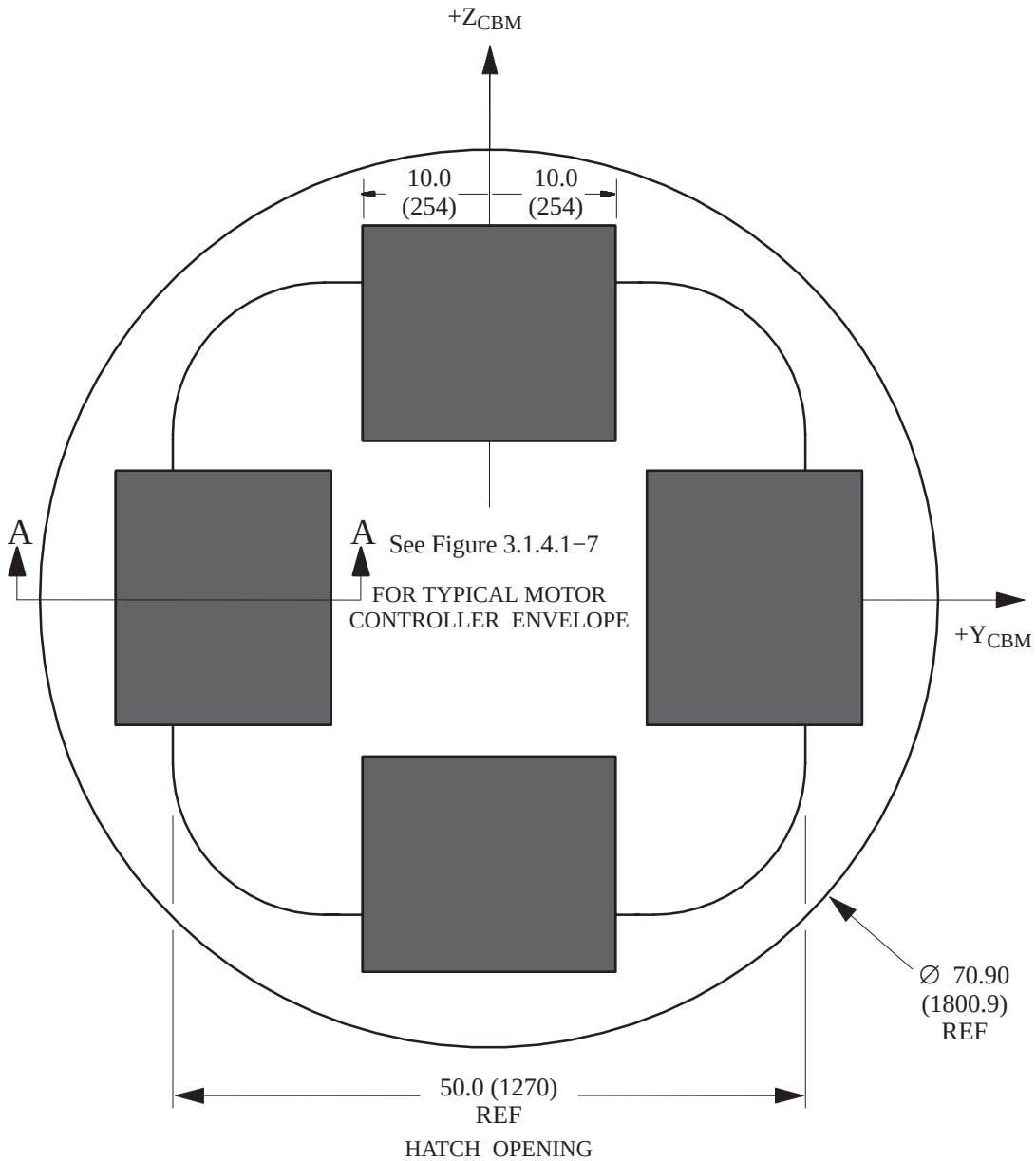

= Stay out area for motor controller in the launched position.

FIGURE 3.1.4.1−6 MOTOR CONTROLLER CLEARANCE ENVELOPE

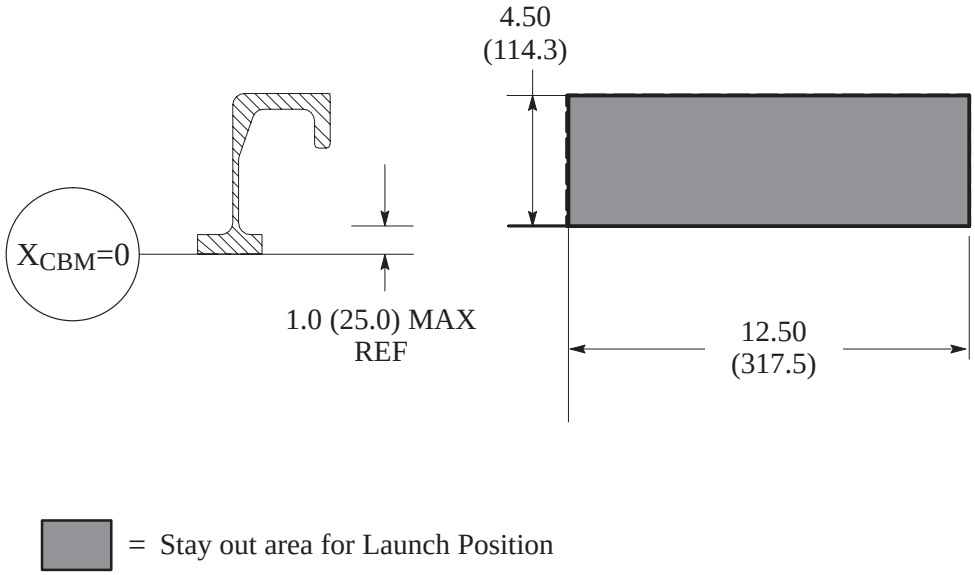

FIGURE 3.1.4.1−7 TYPICAL MOTOR CONTROLLER AXIAL HATCH BEAM CLEARANCE ENVELOPE (VIEW A−A)

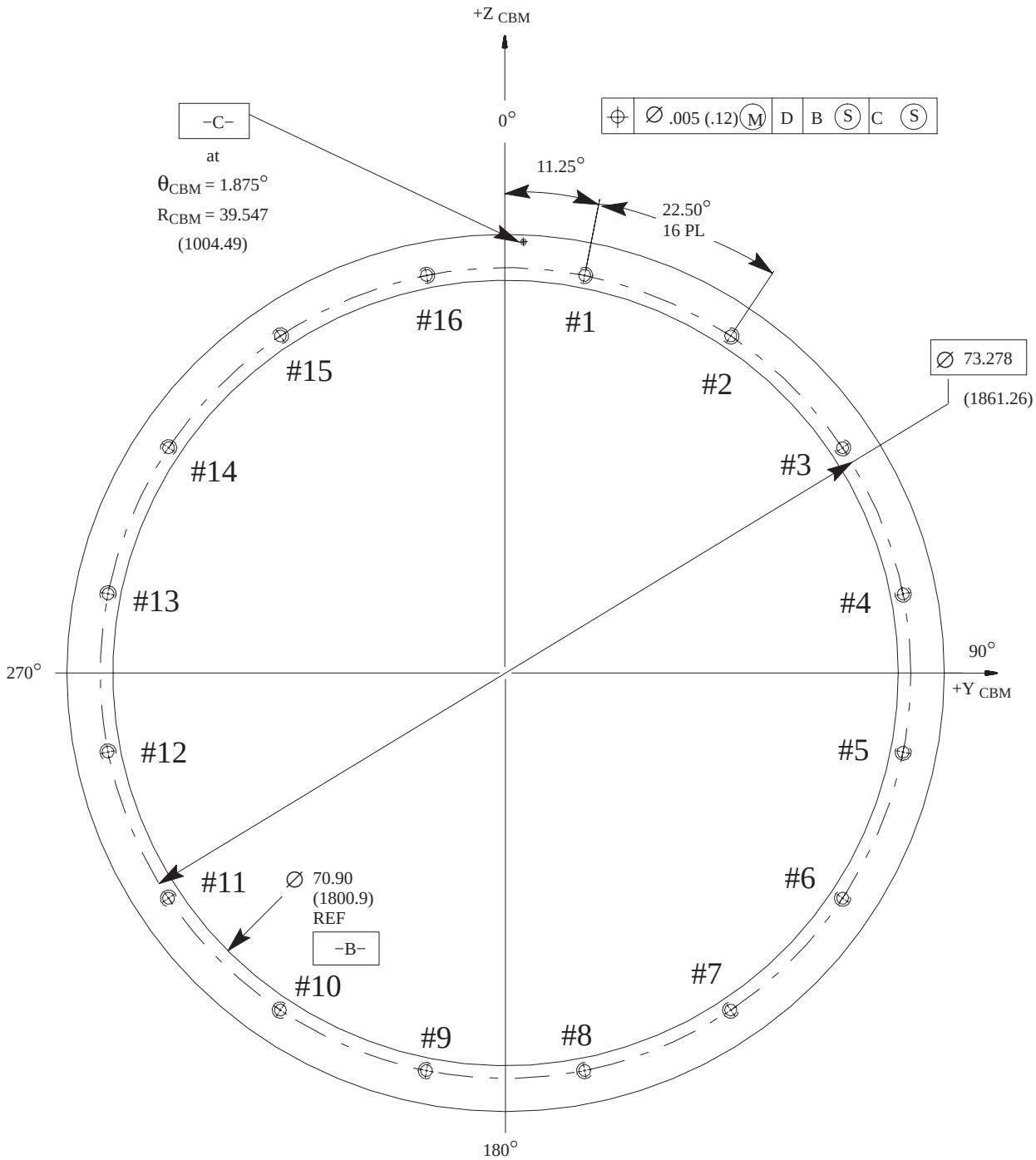

Note: Datum −D− defined in Figure 3.1.4.1−9

FIGURE 3.1.4.1−8 POWERED BOLT CENTERLINE LOCATIONS

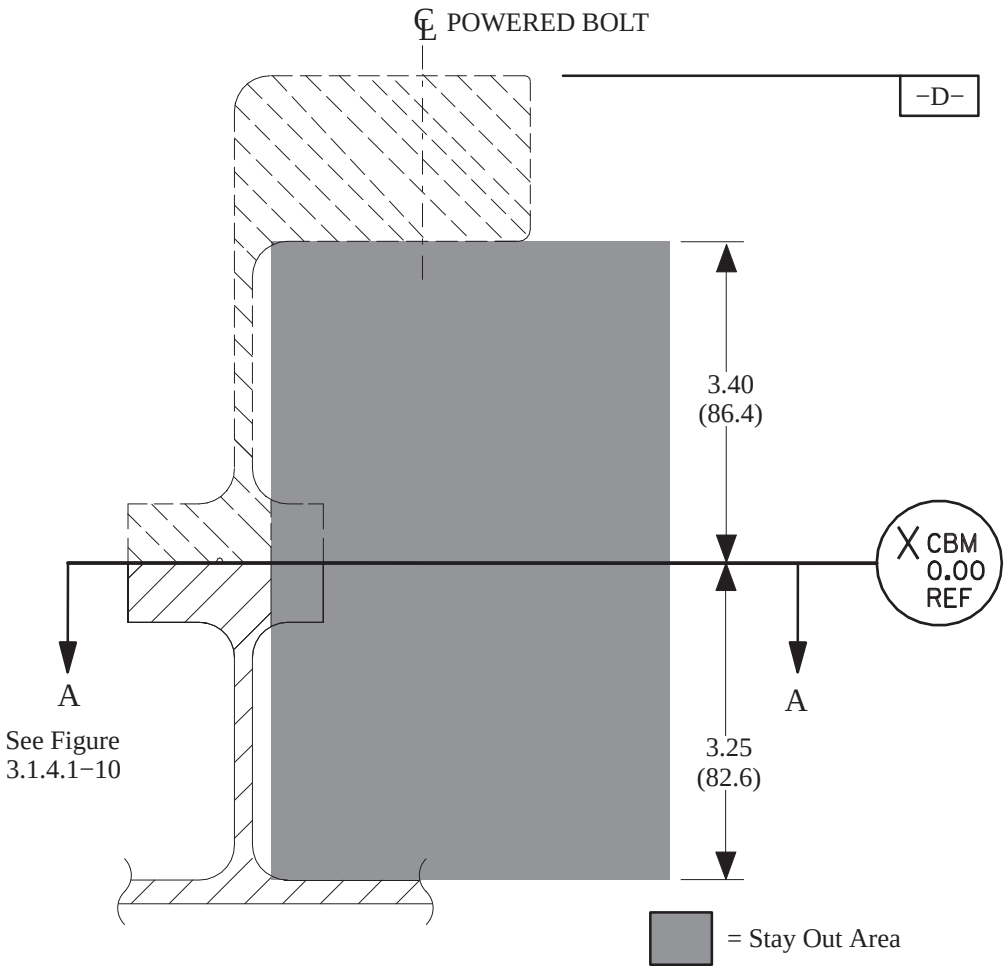

FIGURE 3.1.4.1−9 POWERED BOLT MOTOR CLEARANCE ENVELOPE

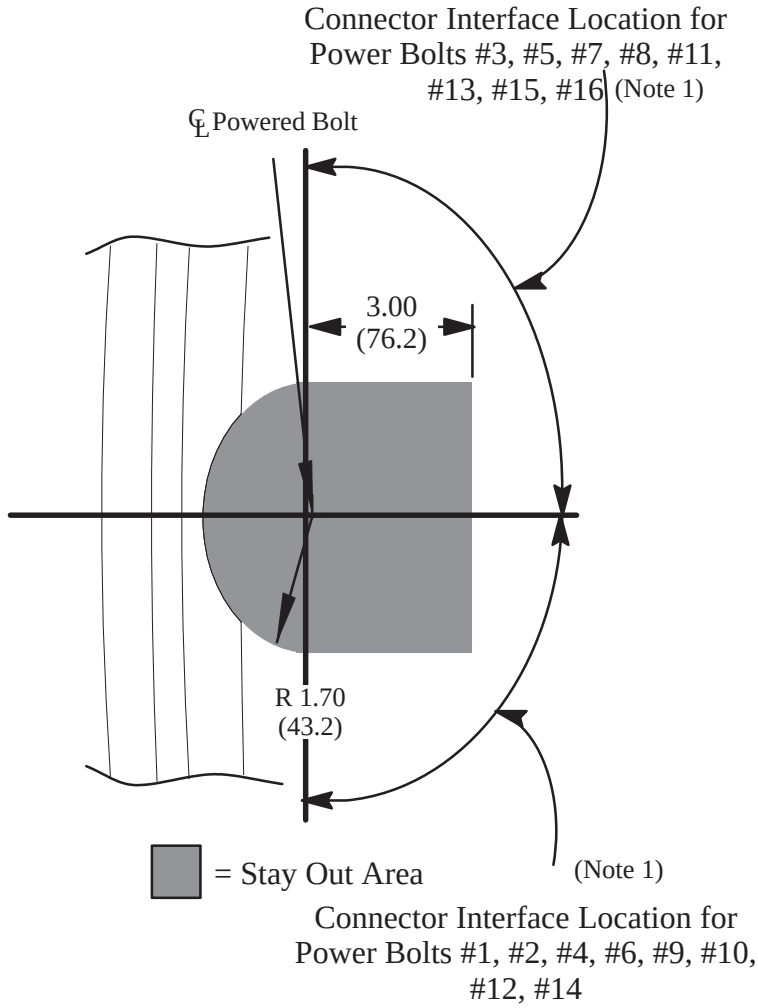

Note 1: Applicable to JEM only.

FIGURE 3.1.4.1−10 POWER BOLT MOTOR CLEARANCE ENVELOPE (VIEW A−A)

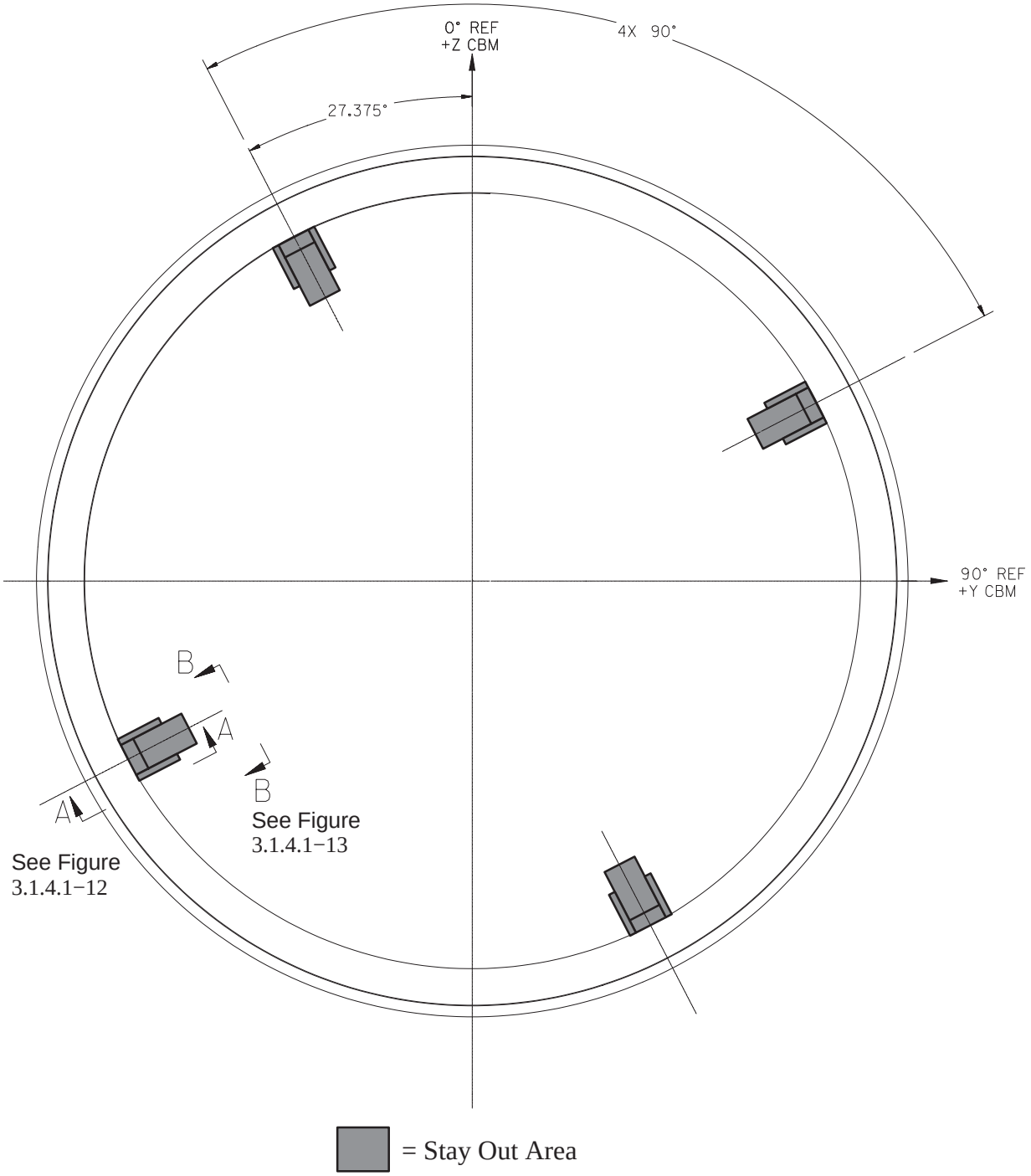

FIGURE 3.1.4.1−11 ACTIVE CBM READY-TO-LATCH CLEARANCE ENVELOPE

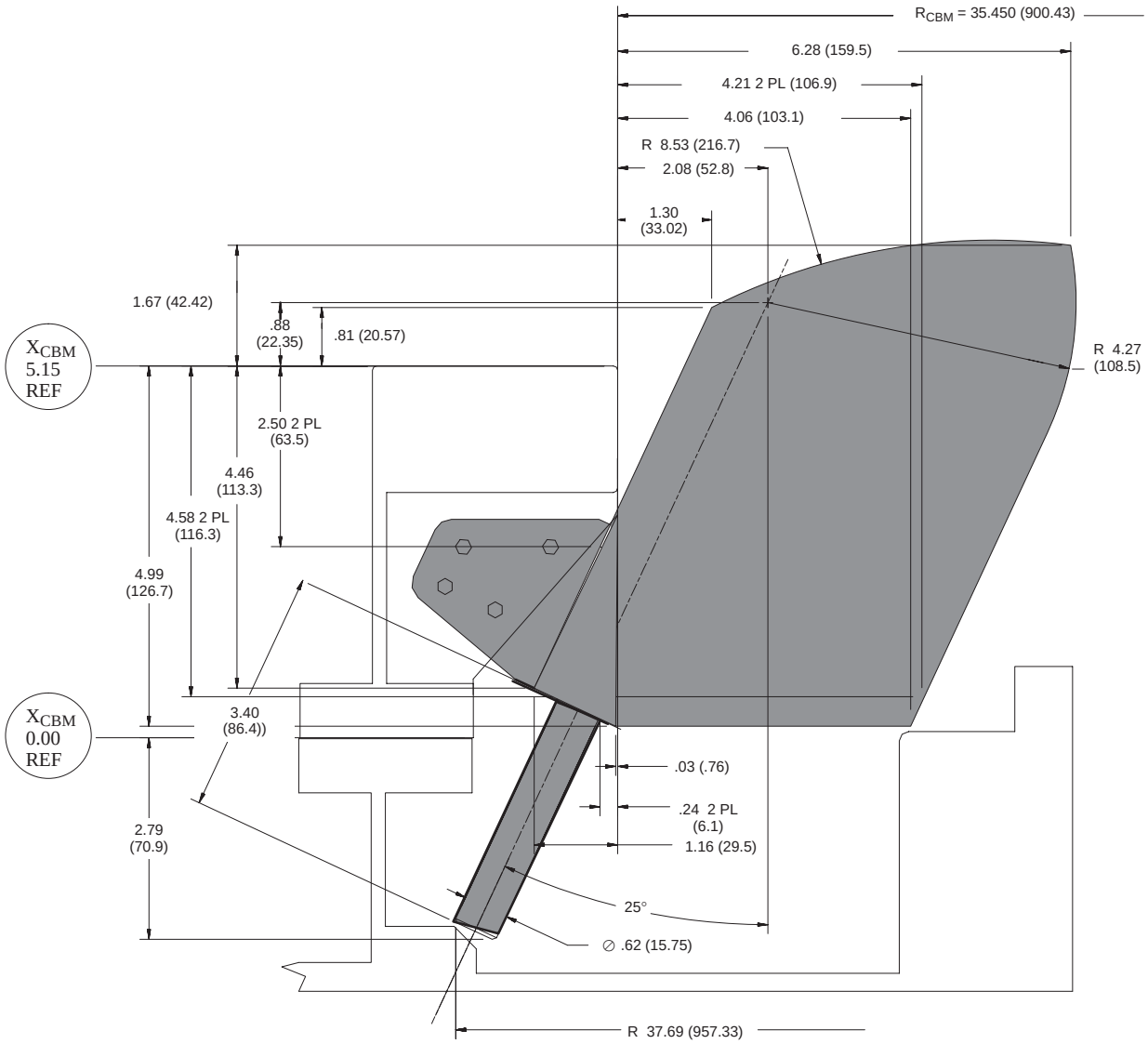

View A−A

Rotated 27° CW

= Stay Out Area

FIGURE 3.1.4.1−12 READY-TO-LATCH CLEARANCE ENVELOPE (VIEW A−A)

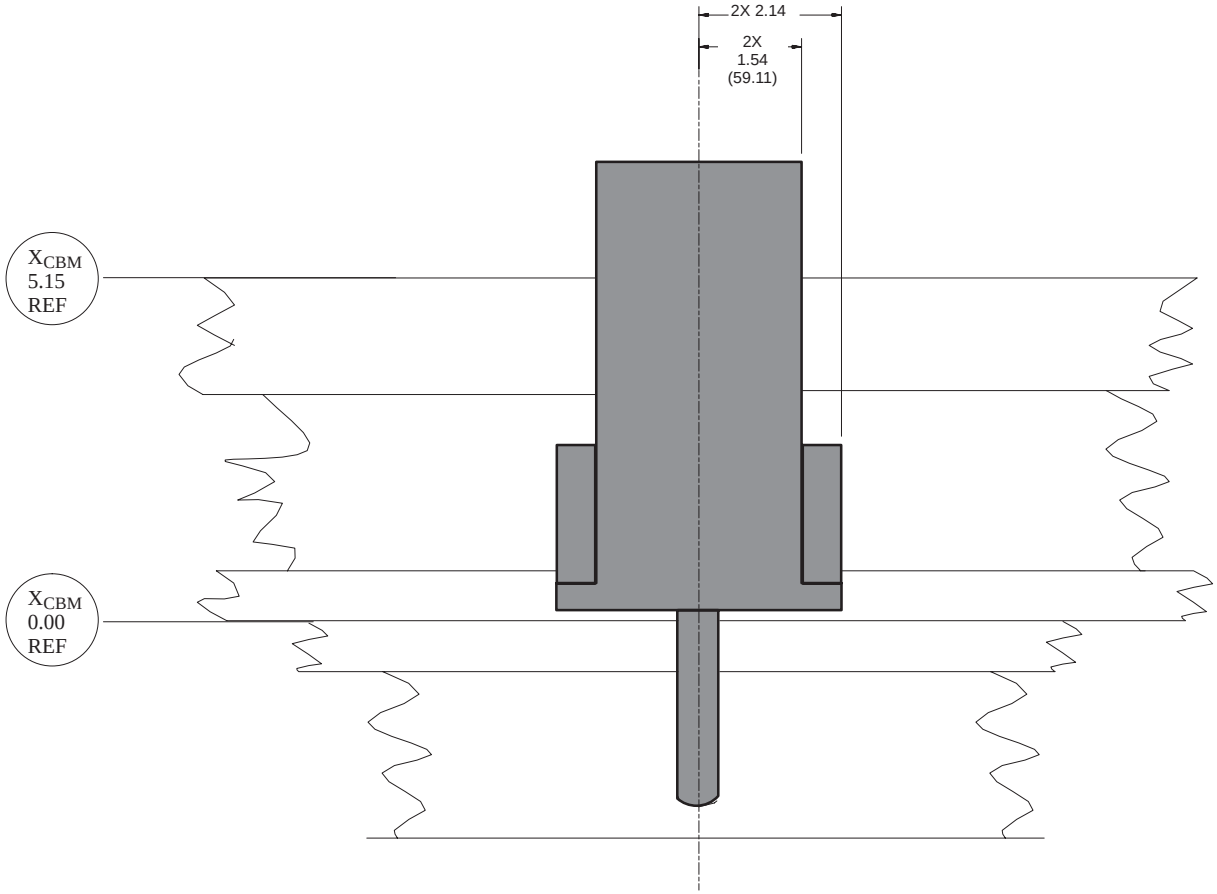

View B−B

Rotated 117° CW

= Stay Out Area

FIGURE 3.1.4.1−13 READY-TO-LATCH CLEARANCE ENVELOPE (VIEW B−B)

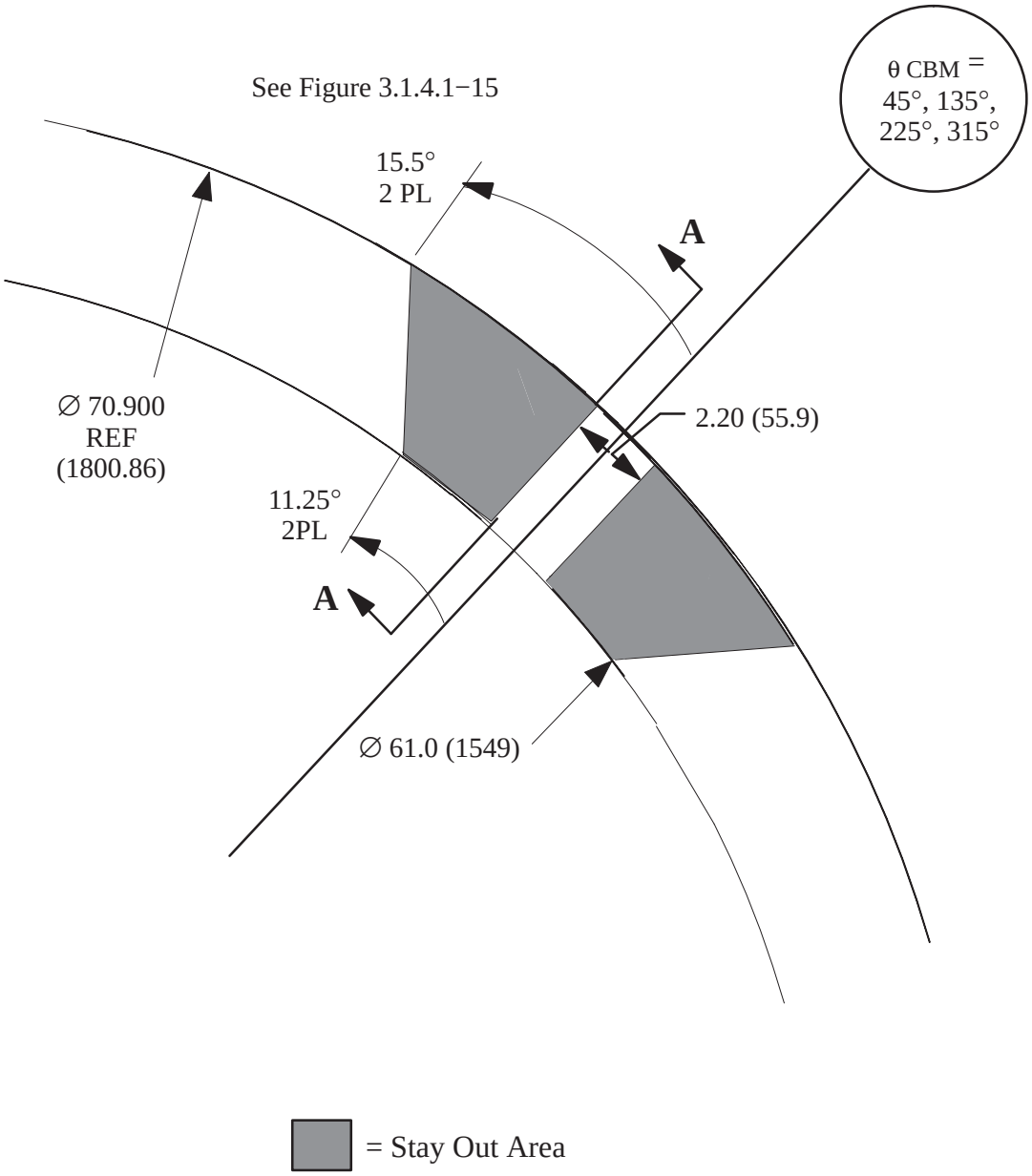

FIGURE 3.1.4.1−14 PASSIVE CBM CLEARANCE ENVELOPE FOR ACTIVE CBM ALIGNMENT GUIDES

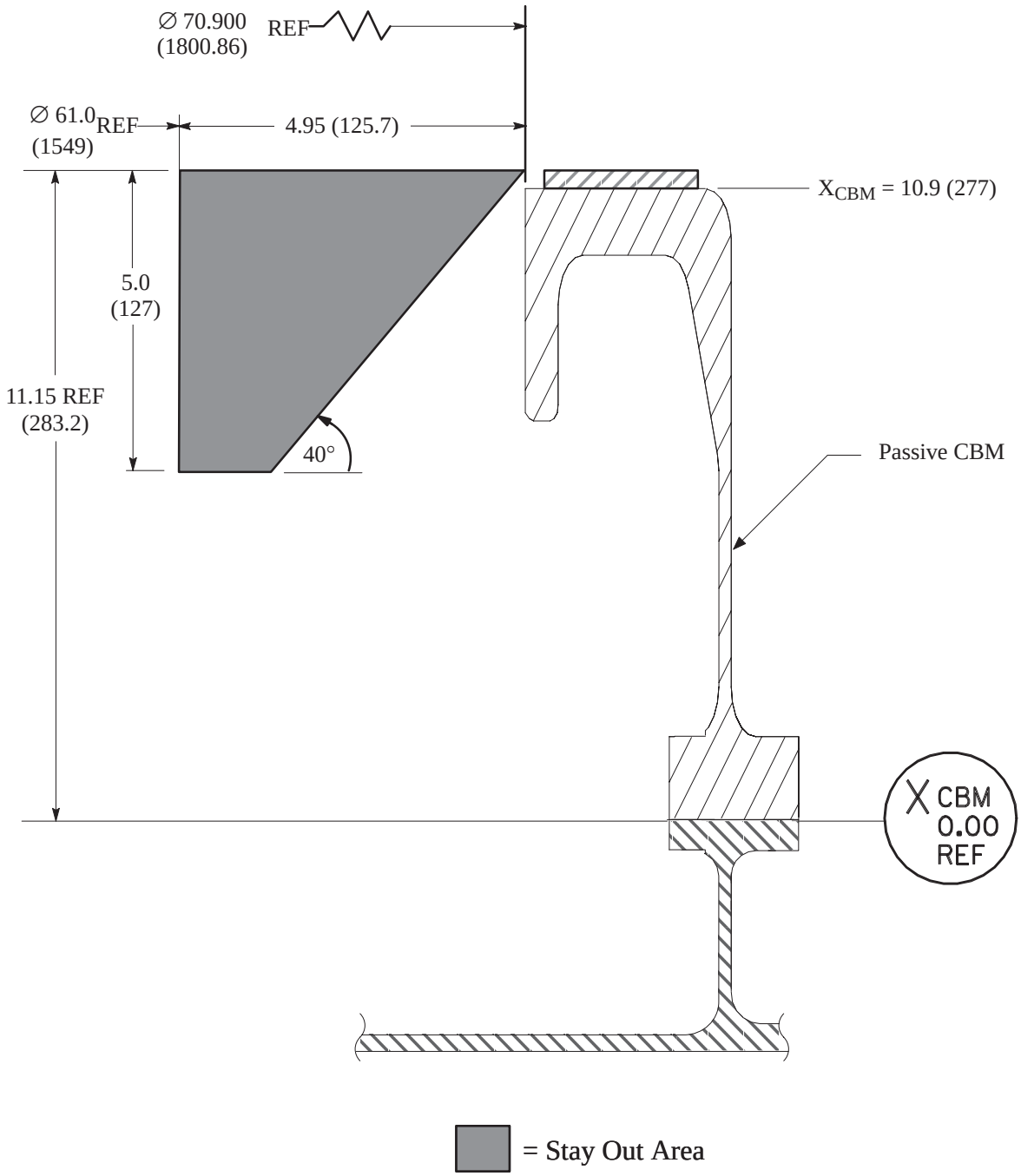

FIGURE 3.1.4.1−15 PASSIVE CBM CLEARANCE ENVELOPE FOR ACTIVE CBM ALIGNMENT GUIDES (VIEW A−A)

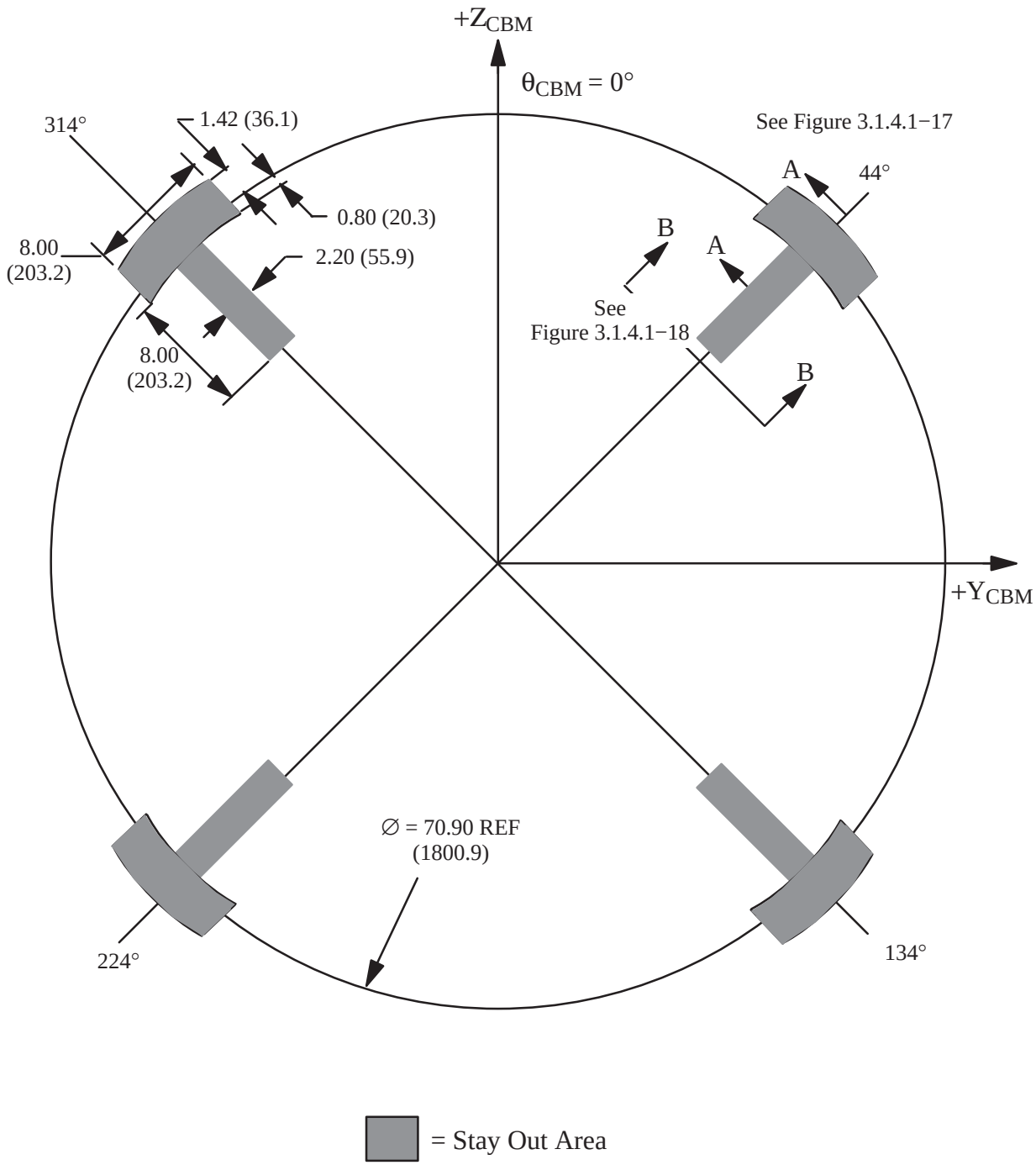

FIGURE 3.1.4.1−16 ACTIVE CBM CAPTURE LATCH AND FITTING CLEARANCE ENVELOPE FOR PASSIVE CBM

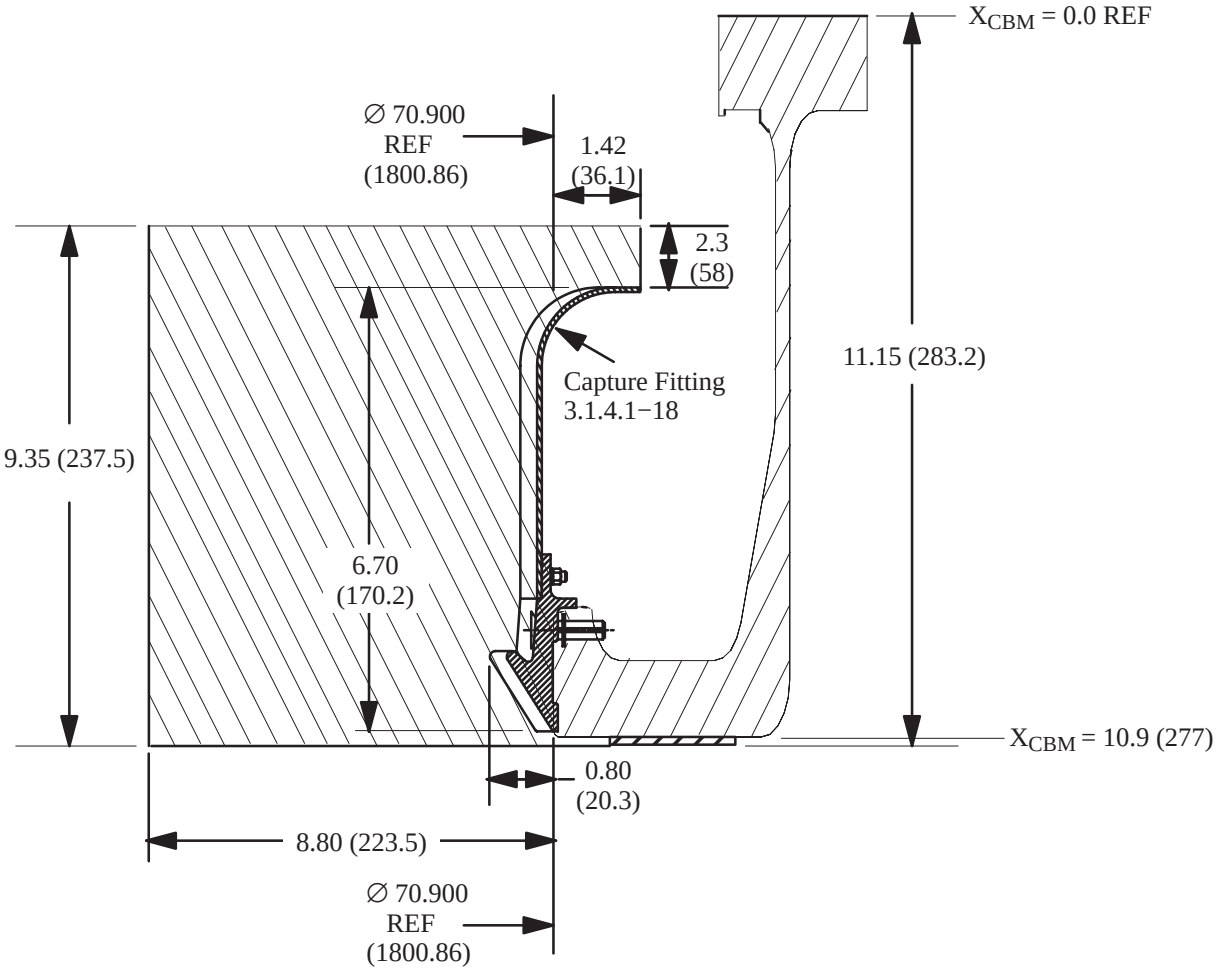

θ_{CBM} = 44°, 134°, 224°, 314°

Stayout Zone

FIGURE 3.1.4.1−17 PASSIVE CBM CAPTURE LATCH AND FITTING CLEARANCE ENVELOPE (VIEW A−A)

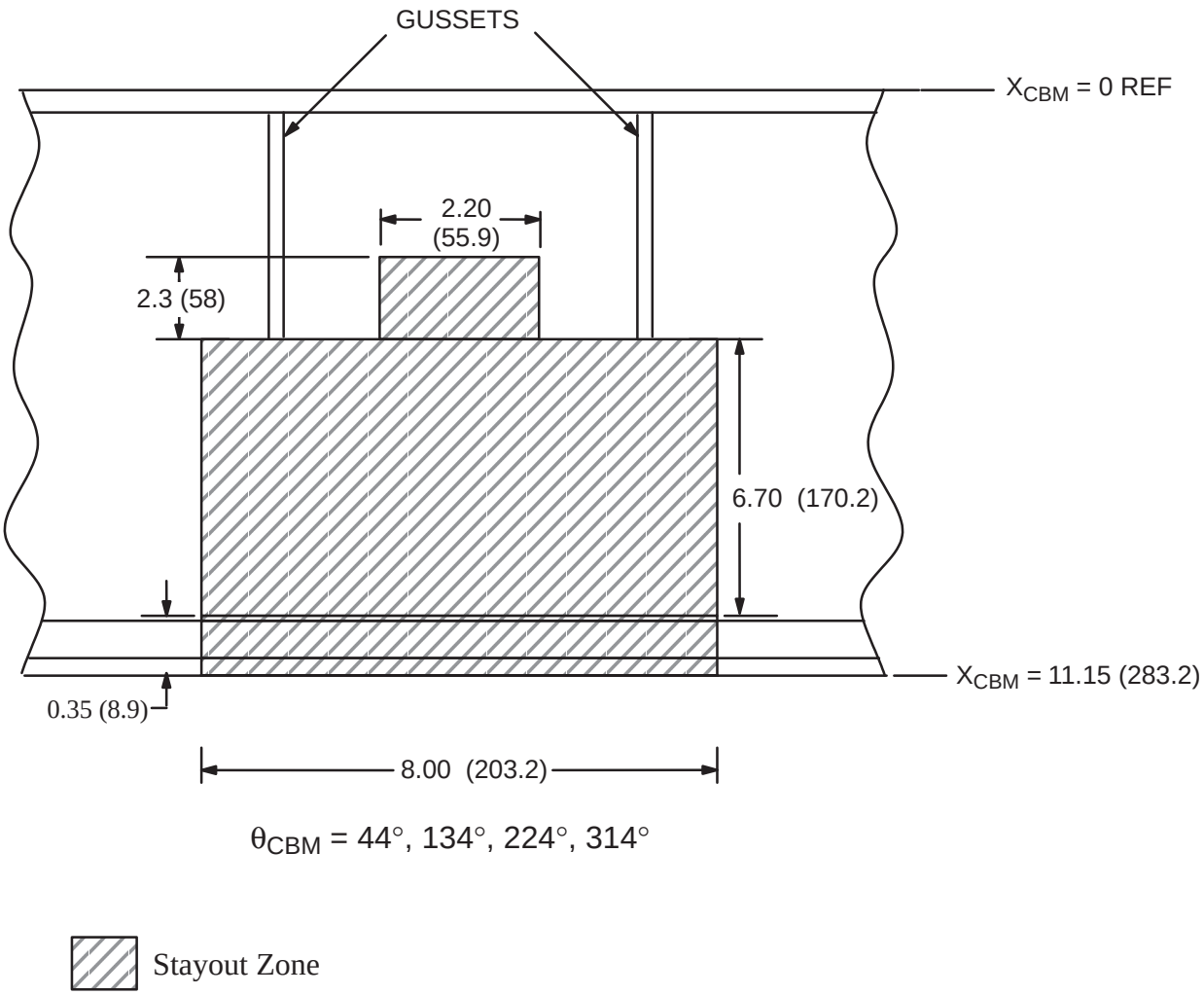

FIGURE 3.1.4.1−18 PASSIVE CBM CAPTURE LATCH AND FITTING CLEARANCE ENVELOPE (VIEW B−B)

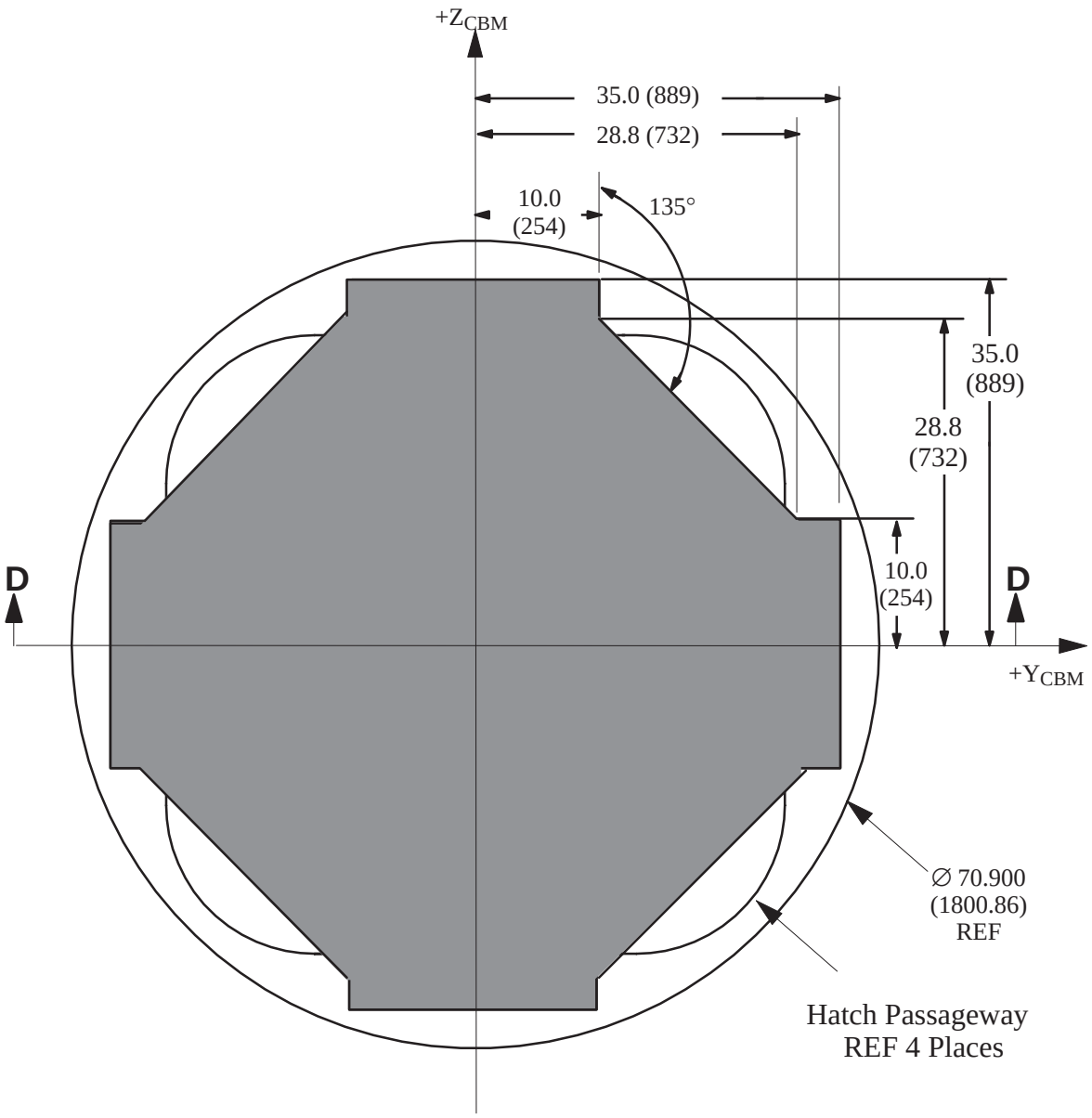

= Stay out area for motor controller and M/D center cover.

NOTE: Applicable to PCBM elements that berth to ACBMs except for JAXA Radial Port. This is the worst case ACBM envelope.

FIGURE 3.1.4.1−19 MOTOR CONTROLLER AND M/D CENTER COVER PASSIVE CBM HARDWARE CLEARANCE ENVELOPE

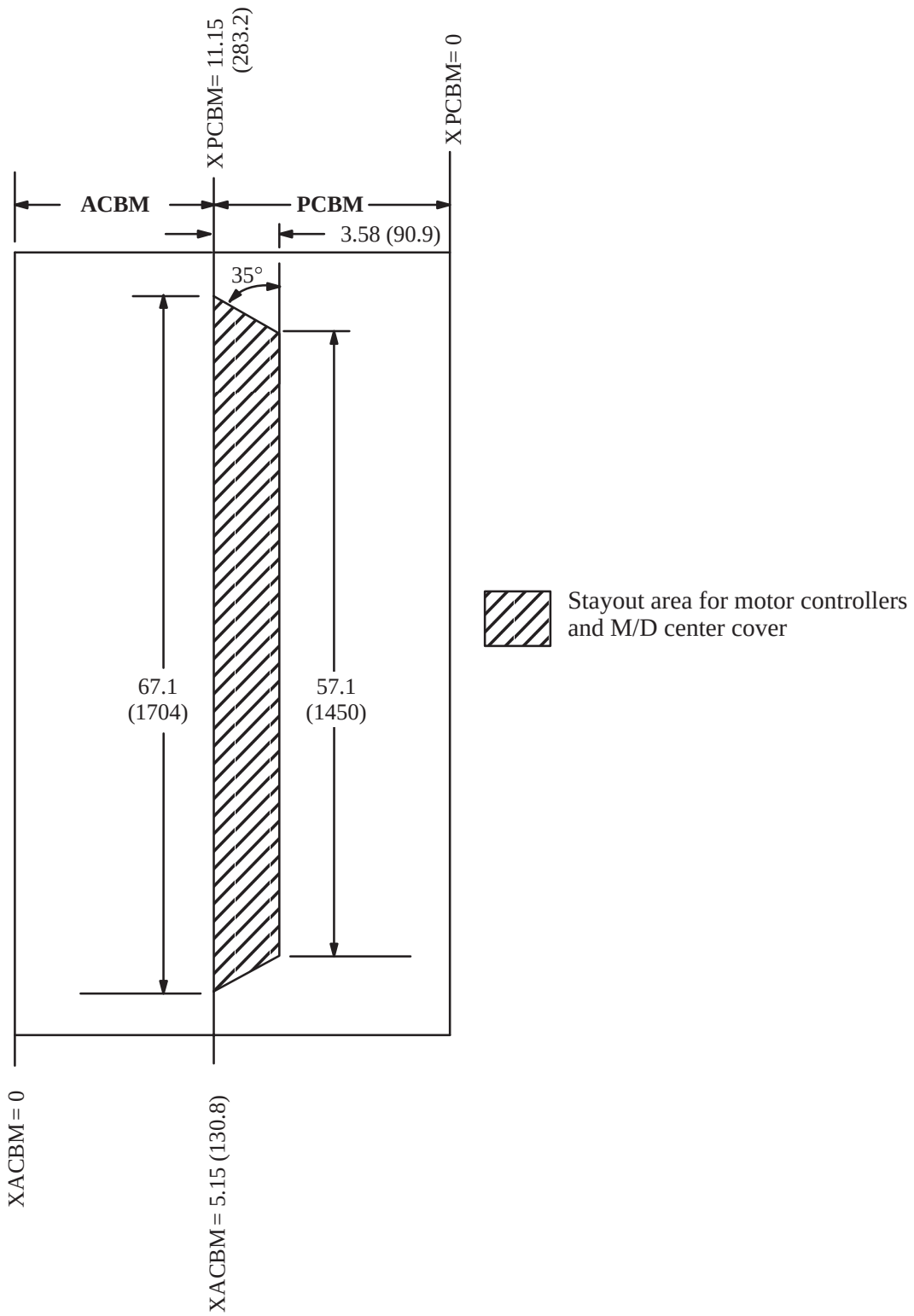

FIGURE 3.1.4.1−20 MOTOR CONTROLLER AND M/D CENTER COVER PCBM HARDWARE CLEARANCE (VIEW D − D)

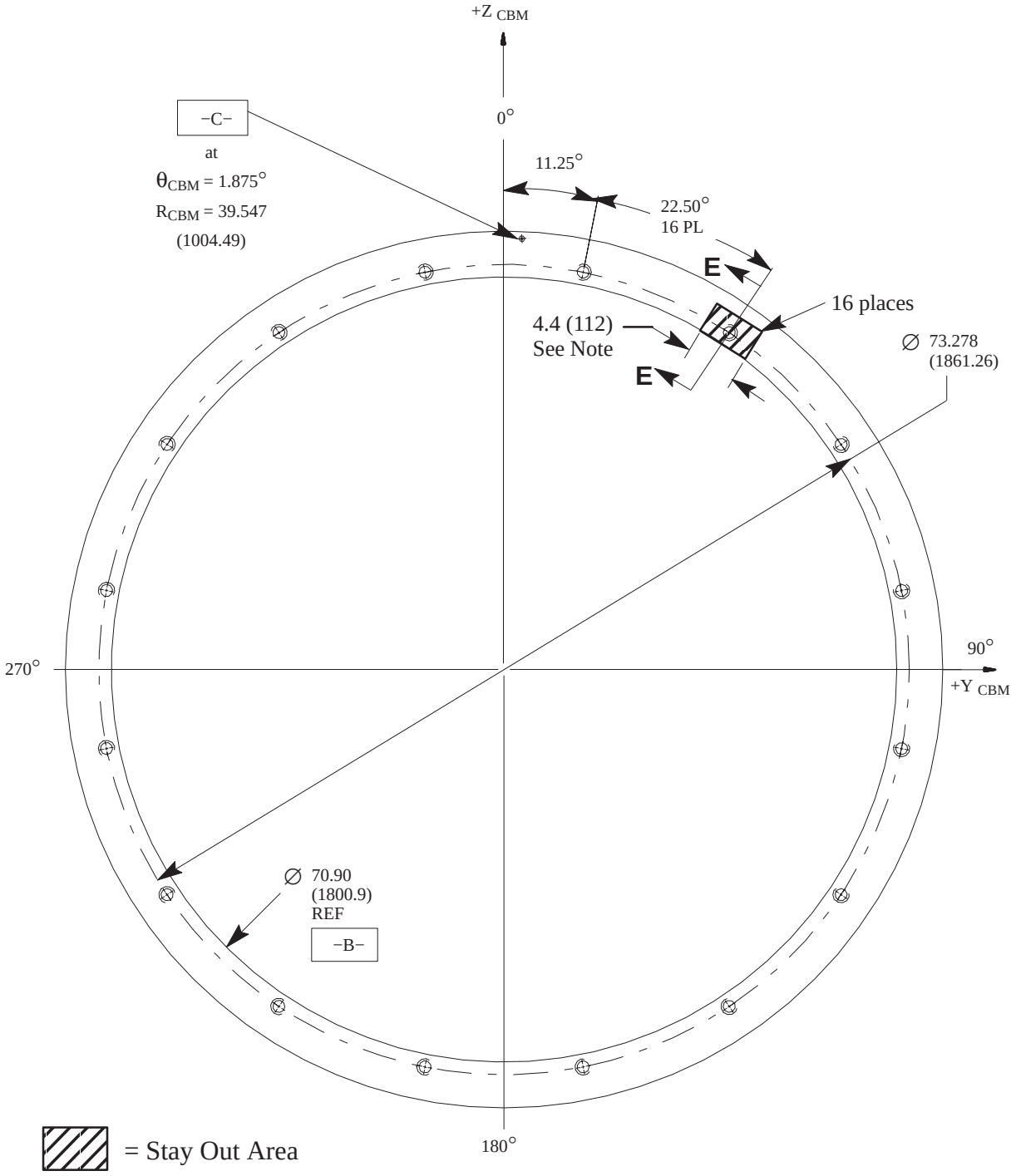

= Stay Out Area

NOTE: 6.7 (170) area for IVA cap

FIGURE 3.1.4.1−21 PASSIVE CBM CLEARANCE ENVELOPE FOR POWERED BOLT NUT

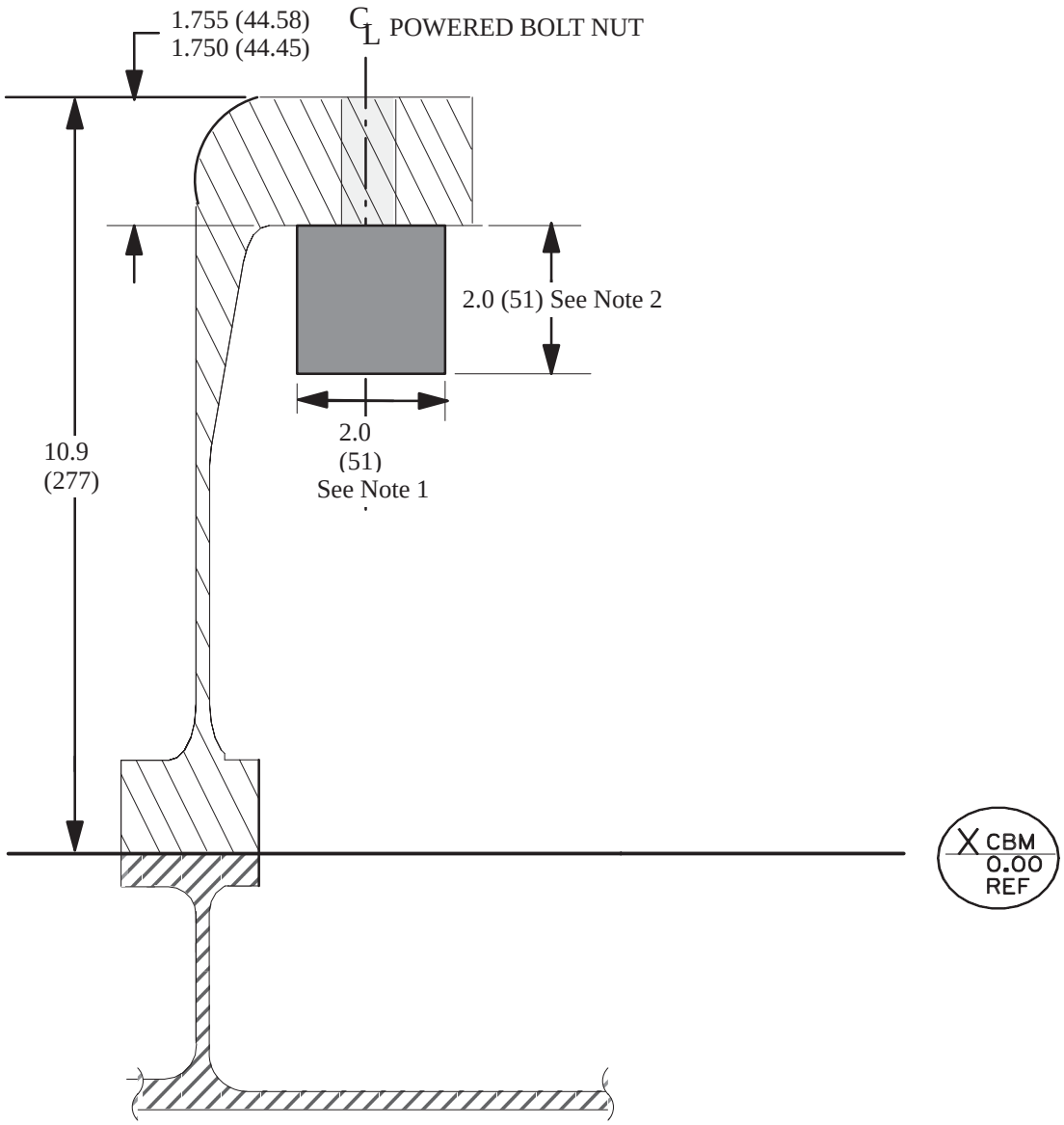

= Stay Out Area

NOTES:
1) 2.9 (74) area for IVA cap after MLI removal.
2) 2.2 (56) area for IVA cap after MLI removal.
3) IVA cap installation N/A for MPLM

FIGURE 3.1.4.1−22 PCBM CLEARANCE ENVELOPE FOR POWERED BOLT NUT (VIEW E − E)

3.1.4.2 CBM IVA SEAL SYSTEM HARDWARE ENVELOPE

The stayout zones for the CBM-to-CBM IVA seals are shown in Figure 3.1.4.2−1, Stayout Zones for CBM-to-CBM IVA Seals In Place, and Figure 3.1.4.2−2, Stayout Zones for CBM−to−CBM IVA Seals in Place (Views A−A and B−B). The stayout zones for the CBM−to−PE Intra−vehicular Activity (IVA) seals are shown in Figure 3.1.4.2−3, Stayout Zones for CBM−to−PE IVA Seals. The CBM−to−PE IVA seals are not applicable to the Mini Pressurized Logistics Module (MPLM). Allowable intrusions into the CBM−to−PE IVA seals stayout zone are shown in Figure 3.1.4.2−4, Gusset Intrusions into CBM−to−PE IVA Seal Stayout; Figure 3.1.4.2−5, Leak Check Port Intrusions into CBM−to−PE IVA Seal Stayout; Figure 3.1.4.2−6, Powered Bolt Intrusions into CBM−to−PE IVA Seal Stayout; and Figure 3.1.4.2−7, Capture Latch Intrusions into CBM−to−PE IVA Seal Stayout.

3.1.4.3 ACTIVE CBM WIRE HARNESS ENVELOPE

The Active CBM includes multiple wire harnesses for power and data distribution from the PE to the Active CBM Control System and from the Active CBM Control System to the multiple electro−mechanical actuators and remote sensors. Figure 3.1.4.3−1, Active CBM Wire Harness Envelope, identifies the allowed envelope for the Active CBM wire harness as installed on an integrated Active CBM to a PE. Wire harness may exist above and below the Xcbm=0 plane. Active CBM Wire Harnesses will either be structurally attached to the pressurized element or the CBM structure via P−type clamps or free routed from the Active CBM Controller Panel Assembly to Actuator within the envelope identified. Location of wire harness P−Clamp locations on the pressurized element are defined in Section 3.3.11, ACBM Wire Harness Attachment Locations. Active CBM wire harnesses and connector/backshell clocking will be oriented to accommodate the PE utility penetrations identified by the element to element ICD’s identified in Figure 3.3.6−1, CBM Feedthrough Locations (Active CBM Only). On−orbit removal of Active CBM Controller panel assemblies and disconnection of Active CBM connectors will be implemented to allow volume for installation of the Module to Module jumpers.

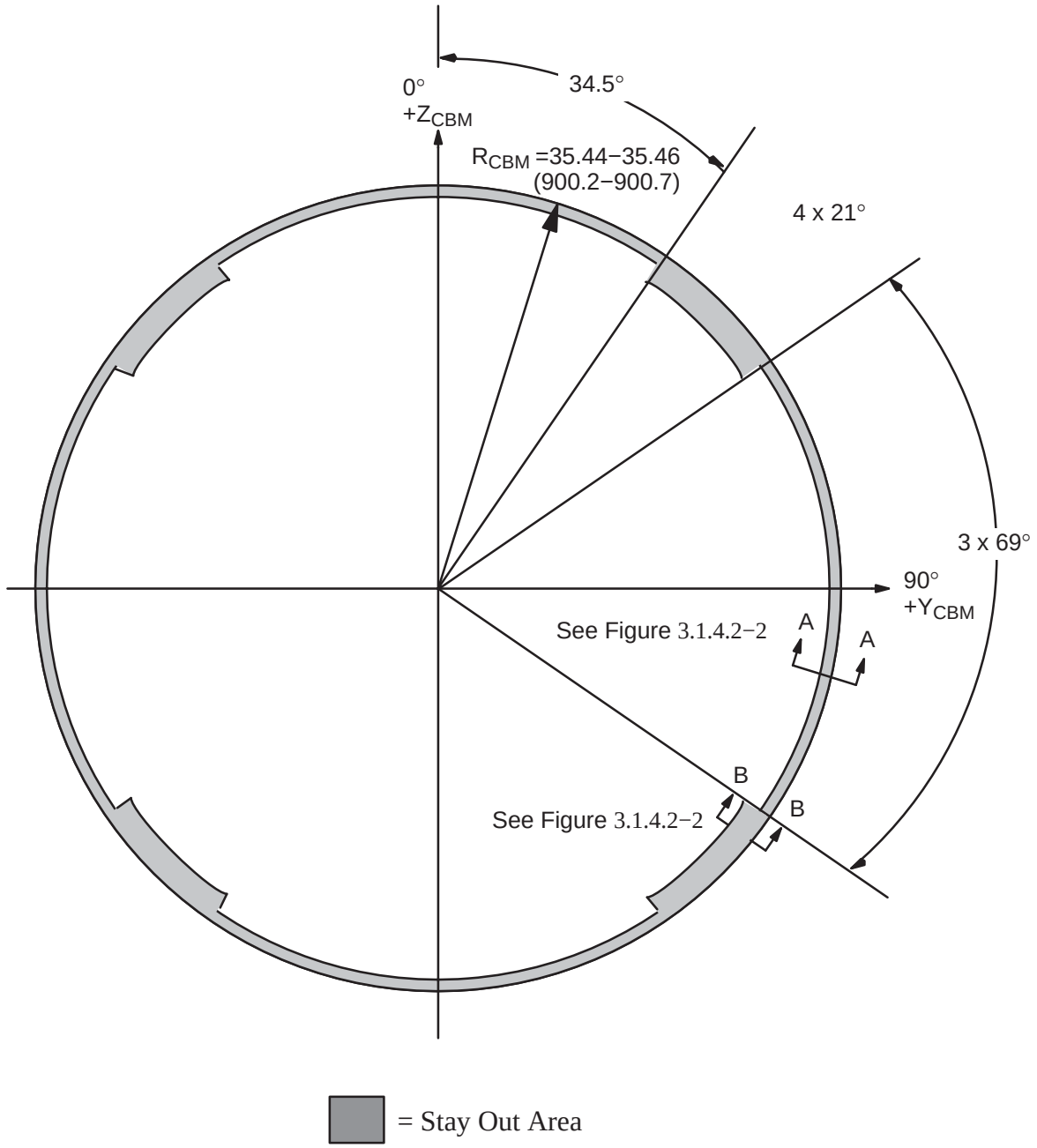

FIGURE 3.1.4.2−1 STAY OUT ZONES FOR CBM-TO-CBM IVA SEALS IN PLACE

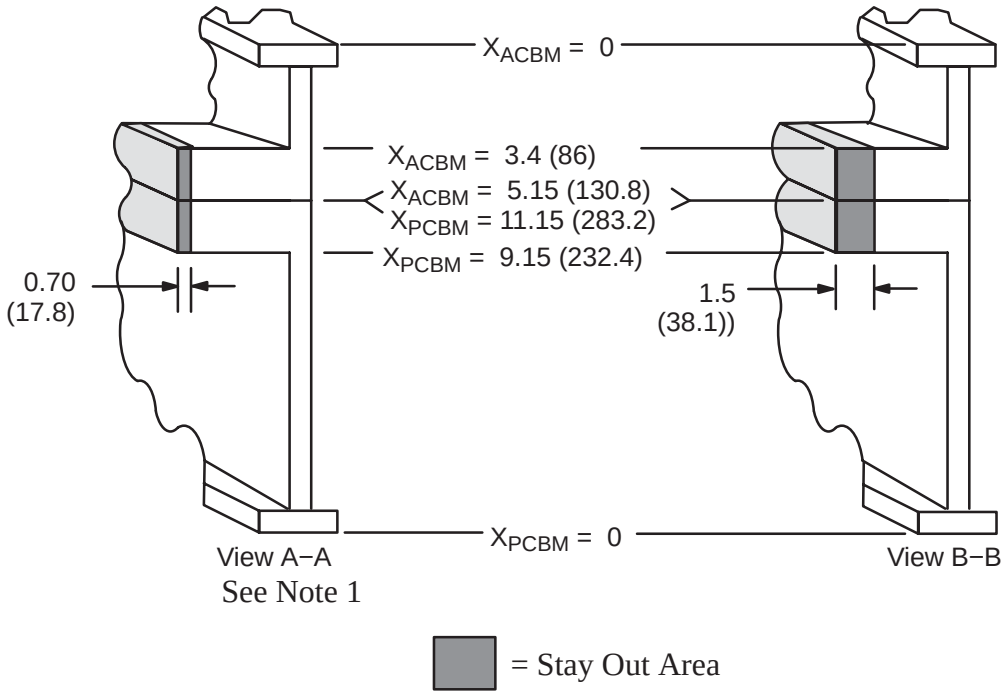

Note 1: One PMA−2 and PMA−3 integrated fluid line may locally intrude into the stayout zone when connected to ISS element.

FIGURE 3.1.4.2−2 STAY OUT ZONES FOR CBM-TO-CBM IVA SEALS IN PLACE (VIEWS A−A AND B−B)

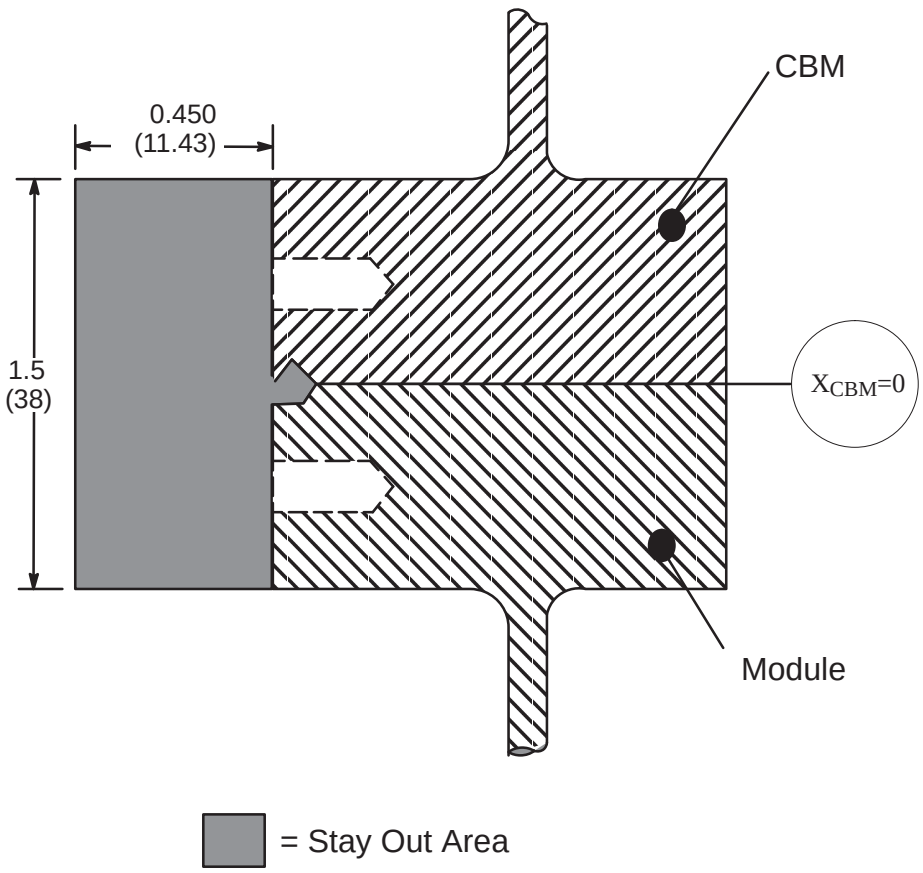

Note : Not Applicable to the MPLM and HTV.

Intrusions to this stayout are defined in Figures 3.1.4.2−4, −5, −6 and −7.

FIGURE 3.1.4.2−3 STAY OUT ZONES FOR CBM−TO−PE IVA SEALS

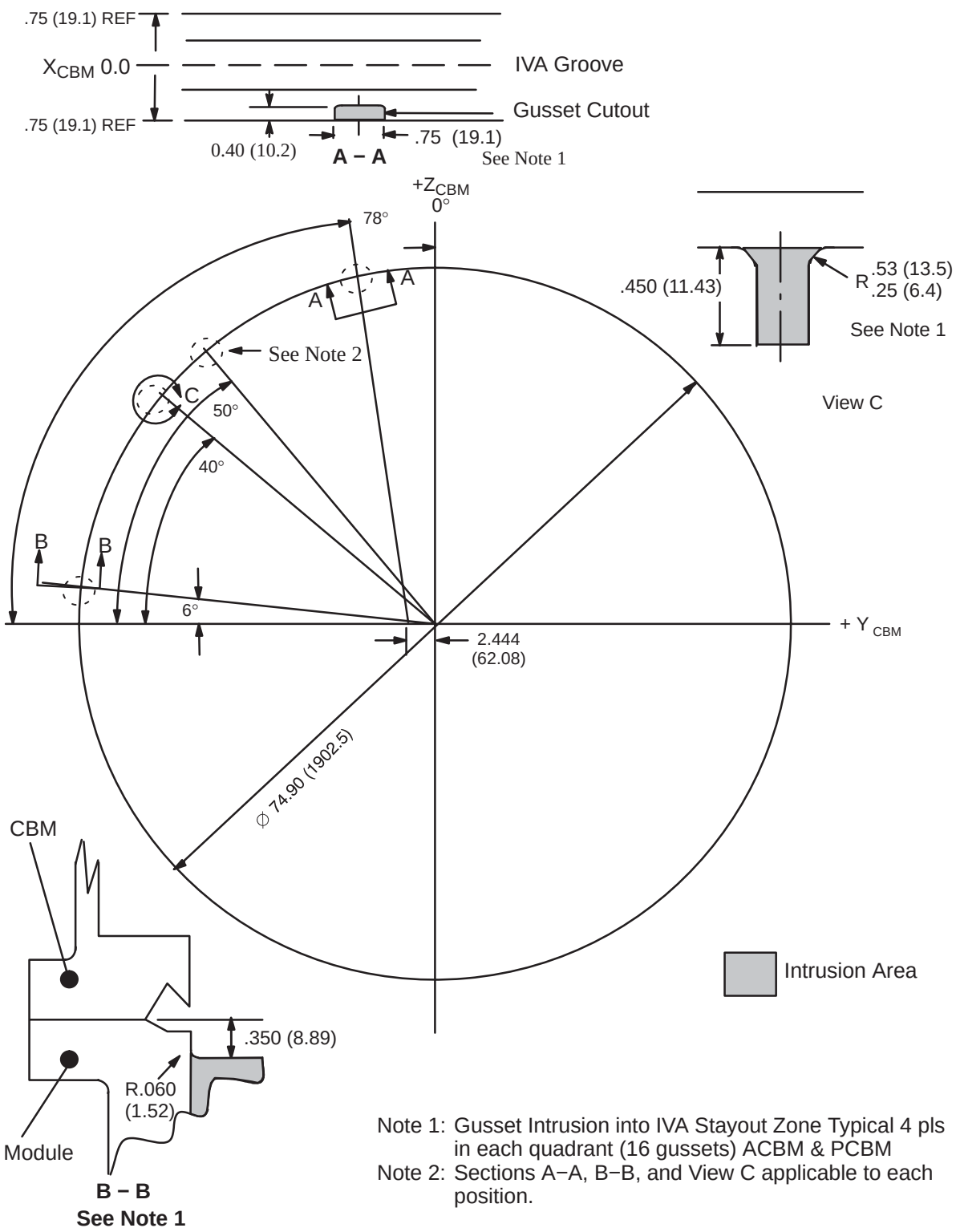

Note 1: Gusset Intrusion into IVA Stayout Zone Typical 4 pls in each quadrant (16 gussets) ACBM & PCBM

Note 2: Sections A−A, B−B, and View C applicable to each position.

FIGURE 3.1.4.2−4 GUSSET INTRUSIONS INTO CBM−TO−PE IVA SEAL STAYOUT

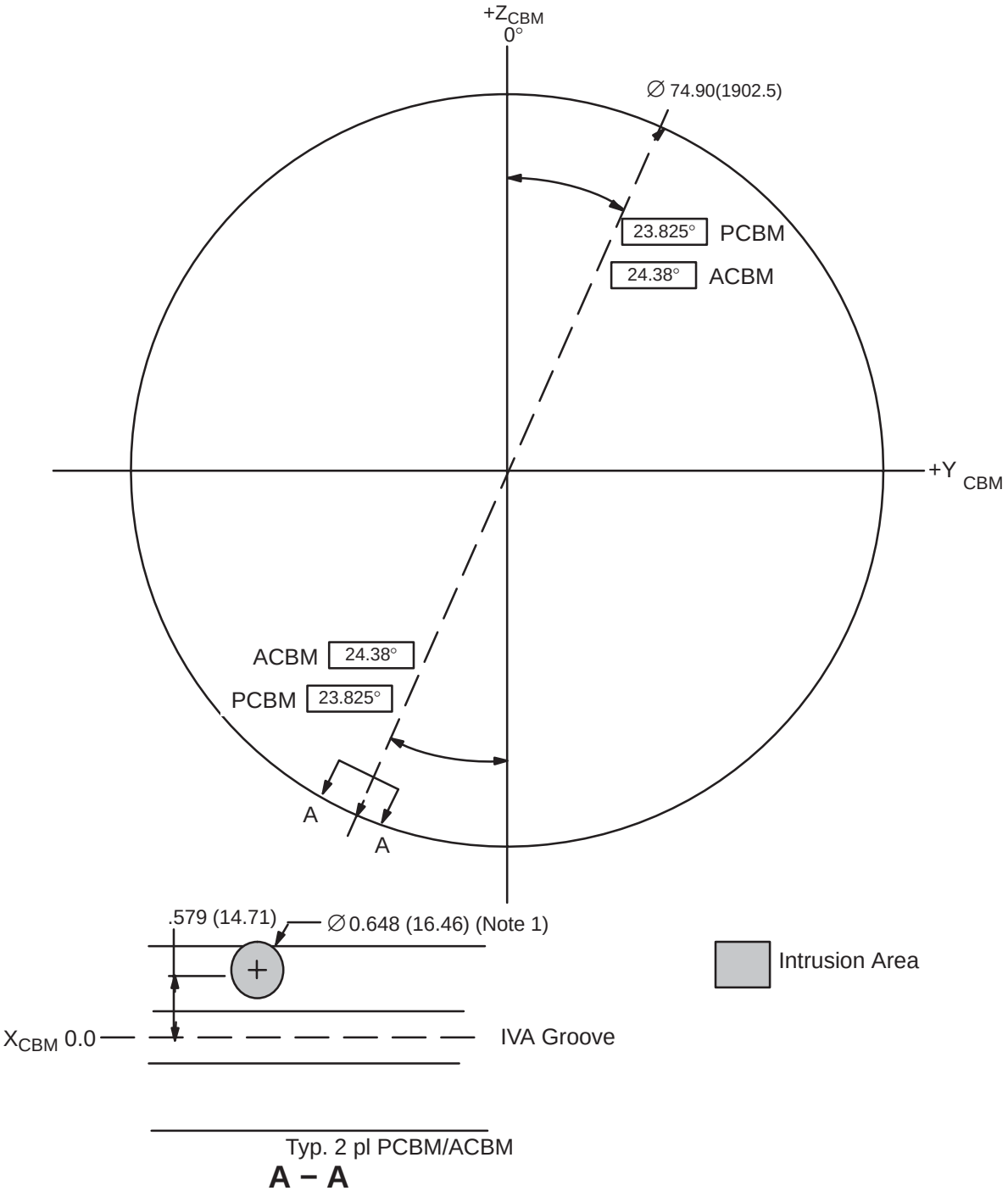

Note 1: Intrusion for entire .450 (11.43) area shown in Figure 3.1.4.2−3.

FIGURE 3.1.4.2−5 LEAK CHECK PORT INTRUSIONS INTO CBM−TO−PE IVA SEAL STAYOUT

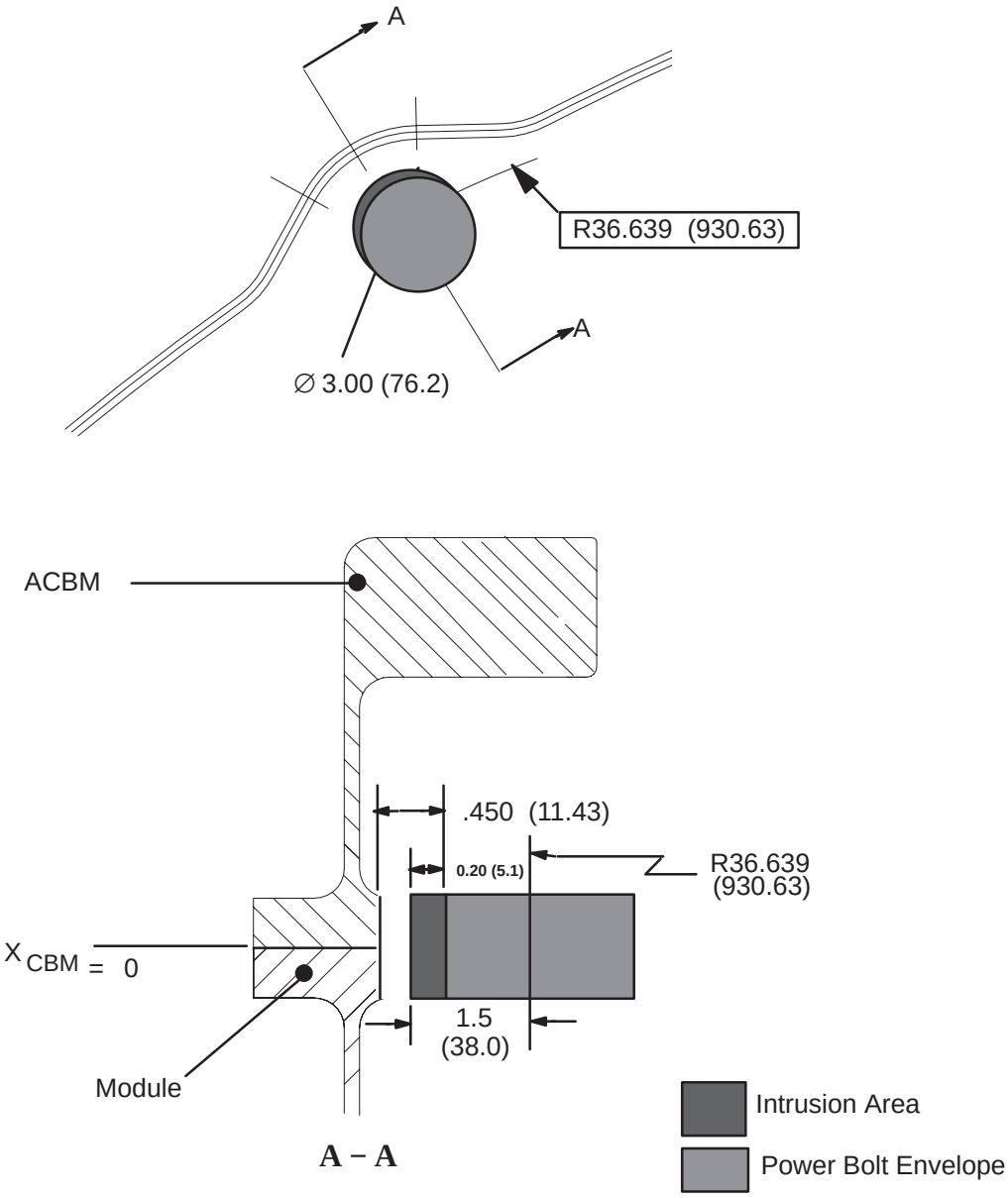

Note: Typical 16 places (see Figure 3.3.2.1−2)

FIGURE 3.1.4.2−6 POWERED BOLT INTRUSIONS INTO ACBM−TO−PE IVA SEAL STAYOUT

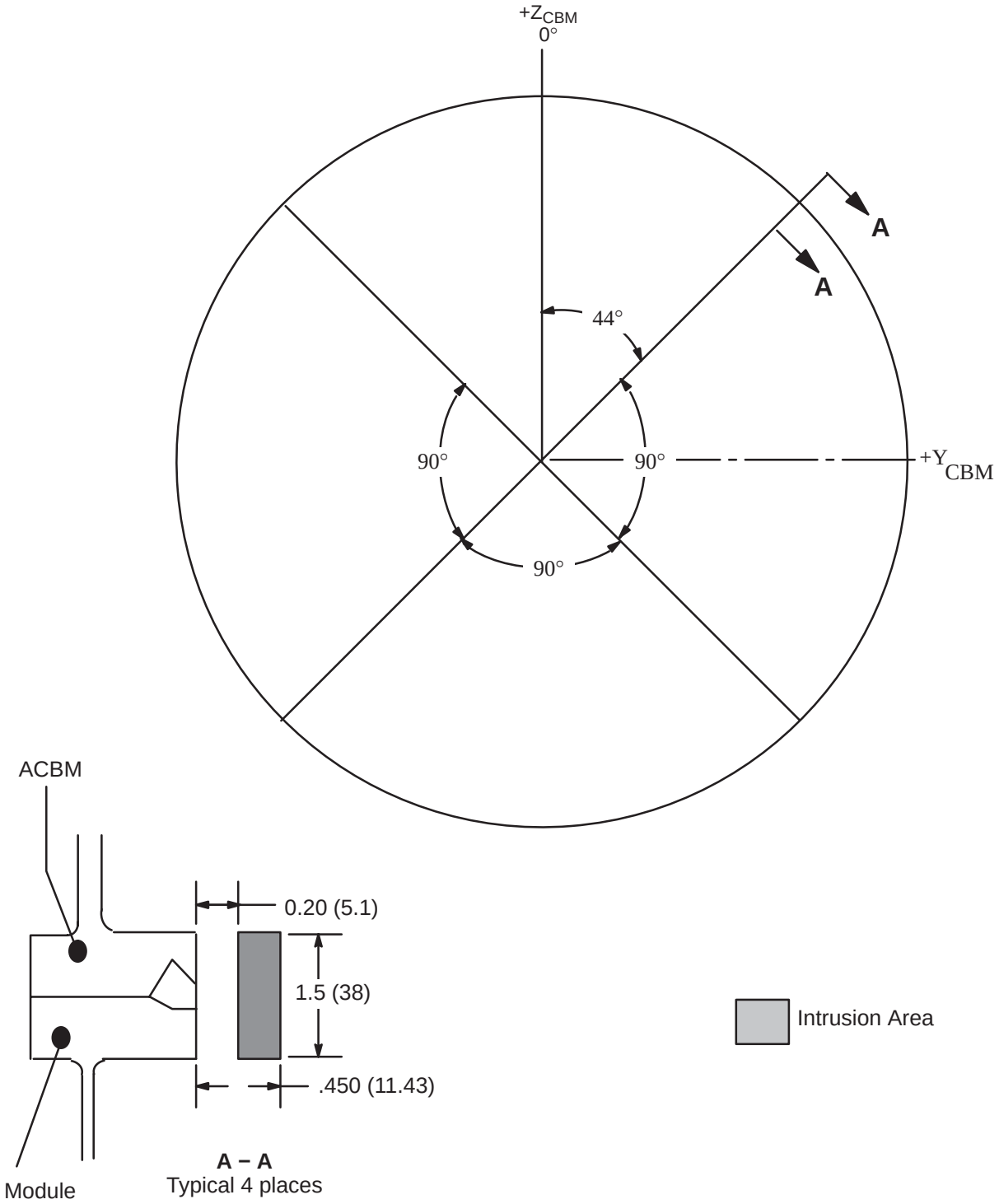

FIGURE 3.1.4.2−7 CAPTURE LATCH INTRUSION INTO IVA SEAL STAYOUT ZONE

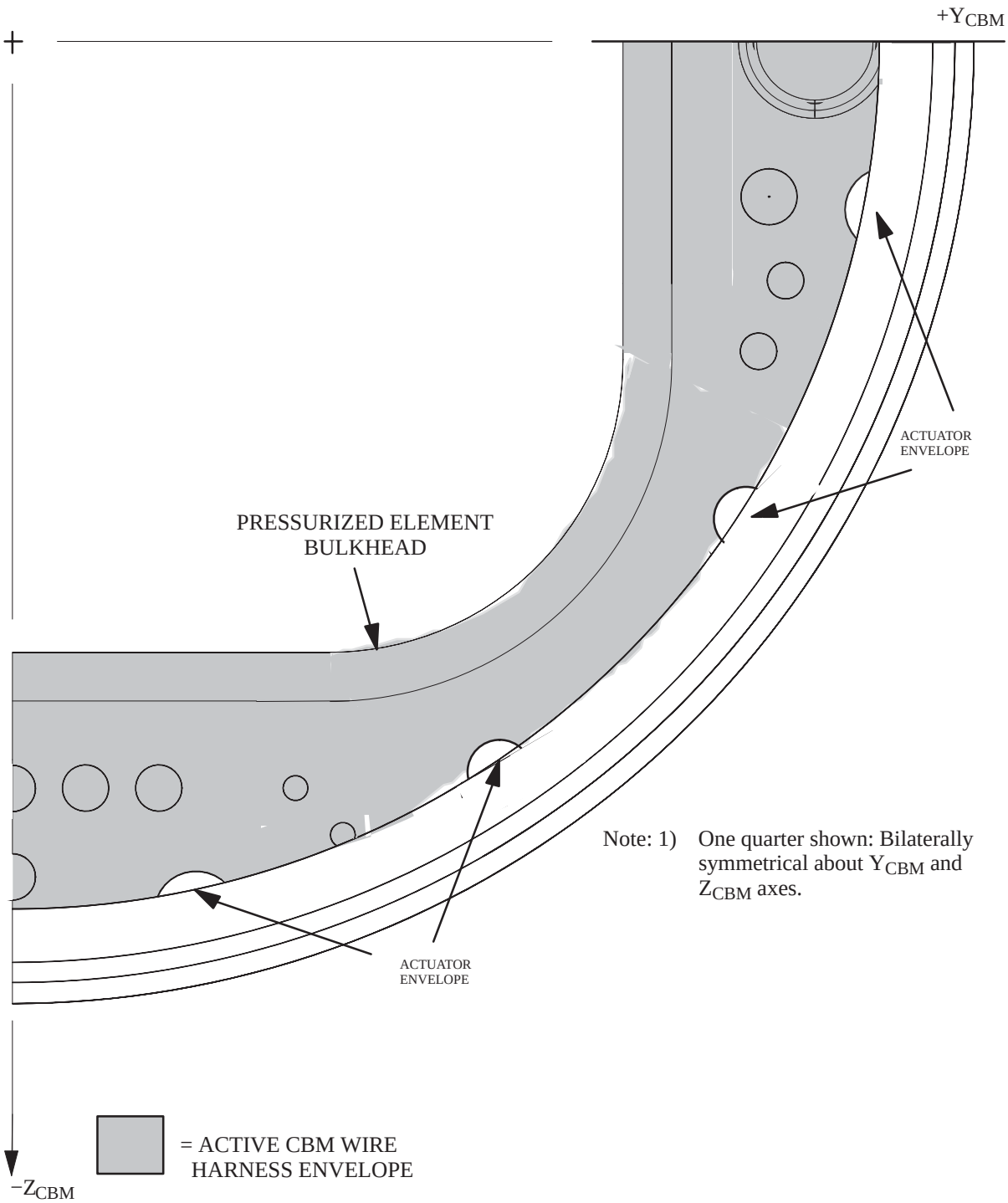

FIGURE 3.1.4.3−1 ACTIVE CBM WIRE HARNESS ENVELOPE

3.1.4.4 NODE 2/3 ACBM RADIAL PORT DEPLOYABLE M/D PETAL HARDWARE ENVELOPE

Static, dynamic and operational envelope stayout zones for the ACBM radial port deployable covers on Node 2/3 are defined in Computer Aided Three−dimensional Interactive Application (CATIA) models identified in Table 3.1.4.4−1, Deployable Cover Models. These models are identified as release 00.80, update 1, and are under configuration control by Revision Level at the Operations Data Management System (ODMS); Boeing Kent Space Center, Kent, Washington. The stayout zone includes an additional 0.5 (12.7) inches to the outer mold line of that shown in the referenced models. Table 3.1.4.4−1 models do not supercede Figures 3.1.4−7.1, 3.1.4−7.2, or 3.1.4−7.3.

TABLE 3.1.4.4−1 DEPLOYABLE COVER MODELS

	FILE NAME	MODEL DESCRIPTION
1	1F48000−1.−−.04.NADIR.model	Node 1 Exterior − Nadir
2	1F98912−1.−−.03.model	Node 1 Exterior − Nadir
3	683−11610−1.−−.04.model	Node 1 Structural Assembly − Nadir
4	683−11617−15.−−.01.model	Node 1 Support Structure − Nadir
5	683−11617−3.−−.01.model	Node 1 Support Structure − Nadir
6	683−11690−1.−−.04.model	Node 1 Secondary Structure − Nadir
7	683−11690−1.−−.06.model	Node 1 Secondary Structure − Nadir
8	683−11691−3.−−.01.model	Node 1 Debris Shielding − Nadir
9	683−13400−4.−A.01.model	Node 1 CBM − Nadir
10	683−14572−1.−−.03.model	Node 1 CBM Deployable Cover − Nadir
11	683−14576−1.−−.03.model	Node 1 CBM Center Cover − Nadir
12	683−23543−1.−−.03.model	Node 1 CBM Closeout Shielding − Nadir
13	683−55110−6.−−.01.model	Node 1 Feedthroughs − Nadir

3.1.5 MASS PROPERTIES

3.1.5.1 CENTER OF MASS

The center of mass for the Active and Passive CBMs is shown in Figure 3.1.5.1−1, Common Berthing Mechanism Center of Mass and Moments of Inertia. The center of mass of the Motor Controller Assembly is as shown in Figure 3A.2.1.2.1−1 of SSP 41004, Part 1.

3.1.5.2 MOMENTS OF INERTIA

The moments of inertia for the Active and Passive CBMs are shown in Figure 3.1.5.1−1.

3.1.5.3 MASS LIMITATIONS

The ACBM mass is in compliance with paragraph 3A.2.1.2.3 of SSP 41004, Part 1 and the PCBM mass is in compliance with paragraph 3B.2.1.2.3 of SSP 41004, Part 1.

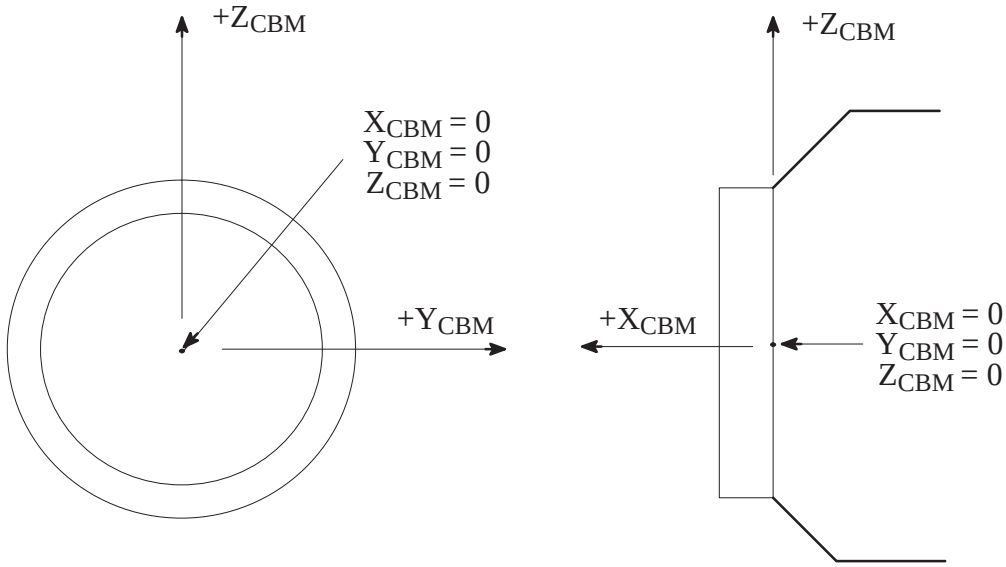

Center of Mass (± 0.5 in (1.27 cm))

Active CBM: with Motor Controllers Note 1	X_{CBM} = 3.15 (80.01) Y_{CBM} = 0.0 Z_{CBM} = 0.0
Passive CBM:	X_{CBM} = 7.75 (196.85) Y_{CBM} = 0.0 Z_{CBM} = 0.0

Moments of Inertia (Slug ft^2)

Active CBM: with Motor Controllers	I_X = 131.4 to 160.6 I_Y = 67.4 to 82.4 I_Z = 65.8 to 80.4
Passive CBM:	I_X = 97.3 to 118.9 I_Y = 51.6 to 63.0 I_Z = 48.0 to 58.6

Note 1: Does not include M/D Shielding.

FIGURE 3.1.5.1−1 COMMON BERTHING MECHANISM CENTER OF MASS AND MOMENTS OF INERTIA

3.1.6 ENGINEERING UNITS AND TOLERANCES

Dimensions in this document are shown in the English (inch, pound, second) system of units followed by the equivalent International System of Units (SI) (metric) value in parenthesis. Measurements may be verified in either system of units.

3.1.6.1 TOLERANCE

Linear tolerances on English dimensions are as indicated in Table 3.1.6.1−1, Linear Tolerances, unless otherwise stated. Linear tolerances on metric dimensions are derived from the English measurements and tolerances as defined in ASTM E380, Standard Practice for Use of the International System of Units (SI) (The Modernized Metric System), Section 4.5. Angular tolerances are ±0.1 degrees on all angles unless otherwise stated.

TABLE 3.1.6.1−1 LINEAR TOLERANCES

ENGLISH DIMENSION	IMPLIED TOLERANCE (INCHES)
X.XX	±0.030
X.XXX	±0.010

3.1.6.2 CONVERSIONS

The unit conversions are in accordance with ASTM E380.

3.2 STRUCTURAL INTERFACES

3.2.1 GENERAL

The structural interfaces consist of the CBM−to−Module deflection limitations, radial deformations, and CBM mathematical model descriptions.

3.2.1.1 ACTIVE CBM−TO−MODULE INTERFACE DEFLECTION LIMITATIONS

The maximum allowable deflections and rotations at the Active CBM−to−PE interface due to pressure are limited to the values provided in the following subparagraphs. Linear tolerances in Table 3.1.6.1−1 do not apply to the values in the following subparagraphs.

This data was obtained from finite element models of the Node and JEM Radial Ports with an active CBM ring attached at the CBM−to−module interface. An internal pressure of 15.2 psi at 0 gravity (g) was applied to the Node inducing deformations into the CBM in its preberthed state (Hatch closed condition).

3.2.1.1.1 RADIAL DEFORMATIONS

The maximum allowable radial deformations of the active CBM−to−PE interface are shown in Figure 3.2.1.1.1−1, Active CBM−to−Module Interface Radial Displacements. These values are relative changes in the radius of the active CBM−to−module interface with respect to its undeformed shape.

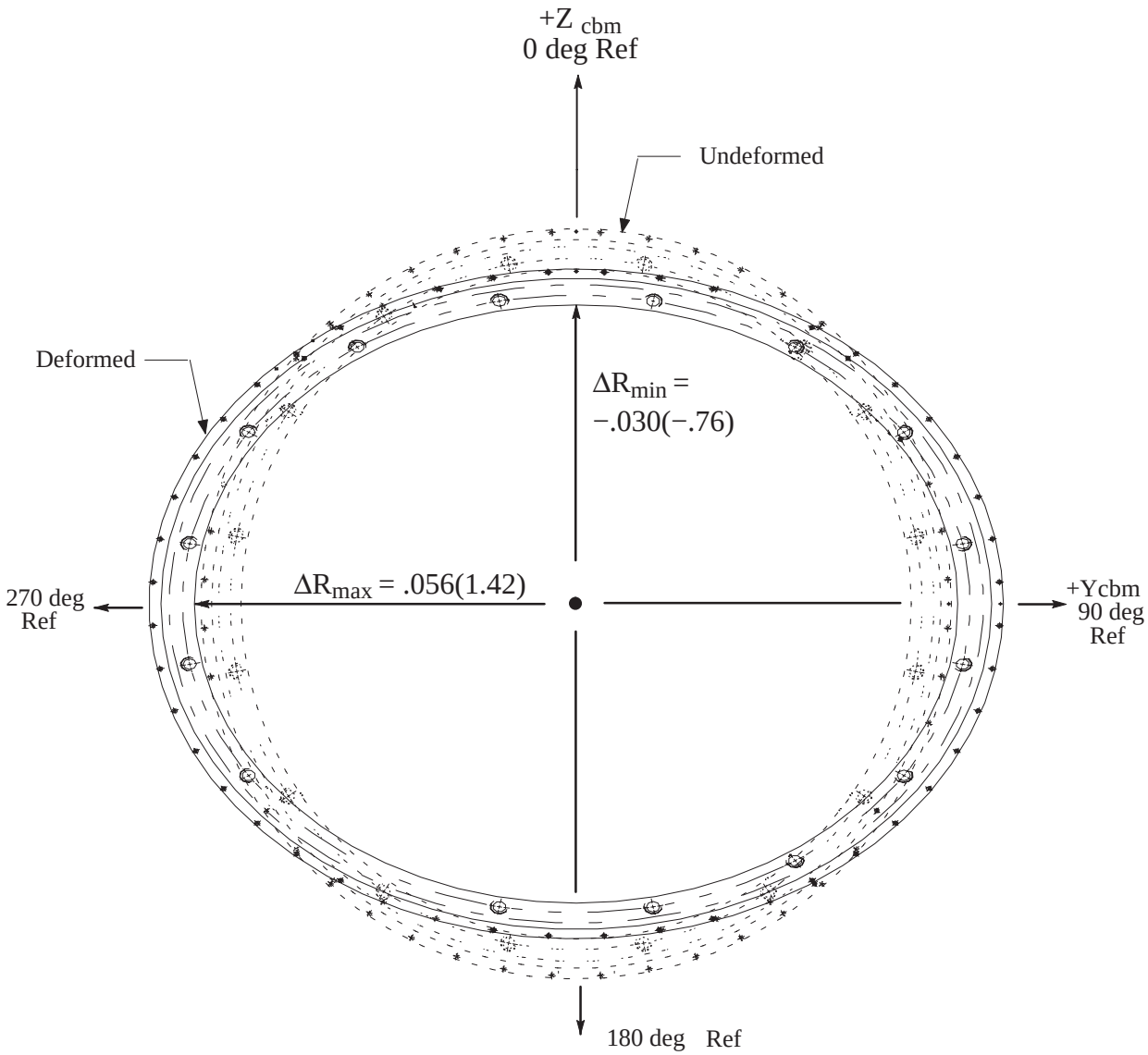

Linear tolerances in Table 3.1.6.1−1 do not apply.

Note: Deformed condition is shown exaggerated. The intent of this figure is to show a pictorial definition of ΔR_{min} and $\Delta R_{max.}$ ΔR_{max} and ΔR_{min} are constrained to occur in the general orientation along the Z or Y CBM axis. [0/180 deg or 90/270 deg ref (+/− 11.25 deg)]

FIGURE 3.2.1.1.1−1 ACTIVE CBM−TO−MODULE INTERFACE RADIAL DISPLACEMENTS

3.2.1.1.2 DIFFERENTIAL DISPLACEMENT ALONG THE X_{CBM} AXIS

Differential axial displacement (ΔX) of any point on the active CBM−to−module interface will not exceed .040 in (1.02 mm). Differential axial displacement (ΔX) = $X_J - X_i$ where X_i and X_J = actual X displacement of any point on the active CBM−to−module interface as shown in Figure 3.2.1.1.2−1, Differential Displacement Along the X_{CBM} Axis. The ΔX over any 7.5 degrees region will not exceed .008 in (.20 mm).

3.2.1.1.3 TANGENTIAL ROTATIONS

Tangential Rotations ($\propto$) at the active CBM−to−module interface are within −.08 degrees $\leq \propto \leq$ +.63 degrees as defined in Figures 3.2.1.1.3−1, Definition of Bulkhead Deflection Parameters−Undeformed State, 3.2.1.1.3−2, Definition of Bulkhead Deflection Parameters−Deformed State ($\propto$max) and 3.2.1.1.3−3, Definition of Bulkhead Deflection Parameters−Deformed State ($\propto$min).

3.2.1.2 DELETED

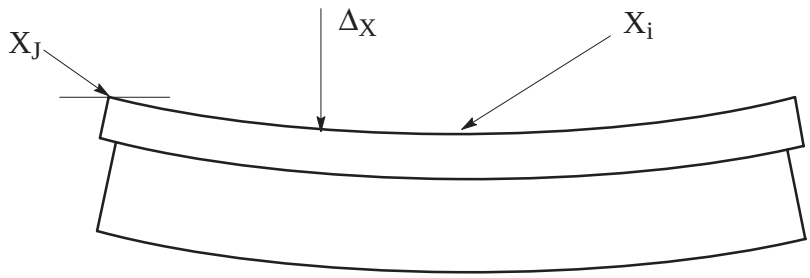

VIEW A−A

X_i = min absolute displacement
X_J = max absolute displacement

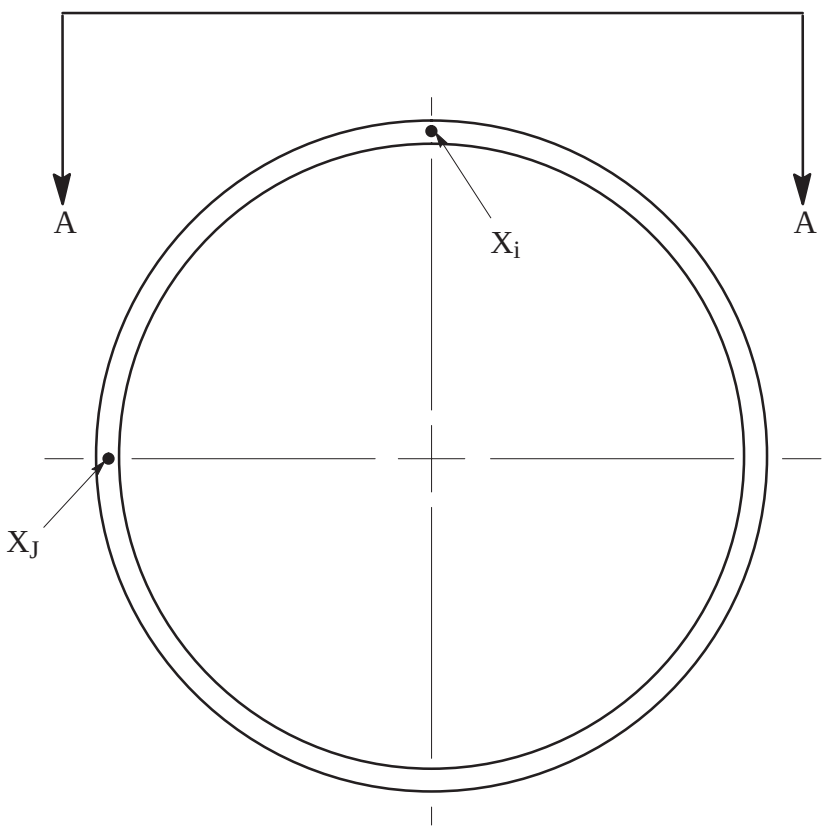

FIGURE 3.2.1.1.2−1 DIFFERENTIAL DISPLACEMENT ALONG THE X_{CBM} AXIS

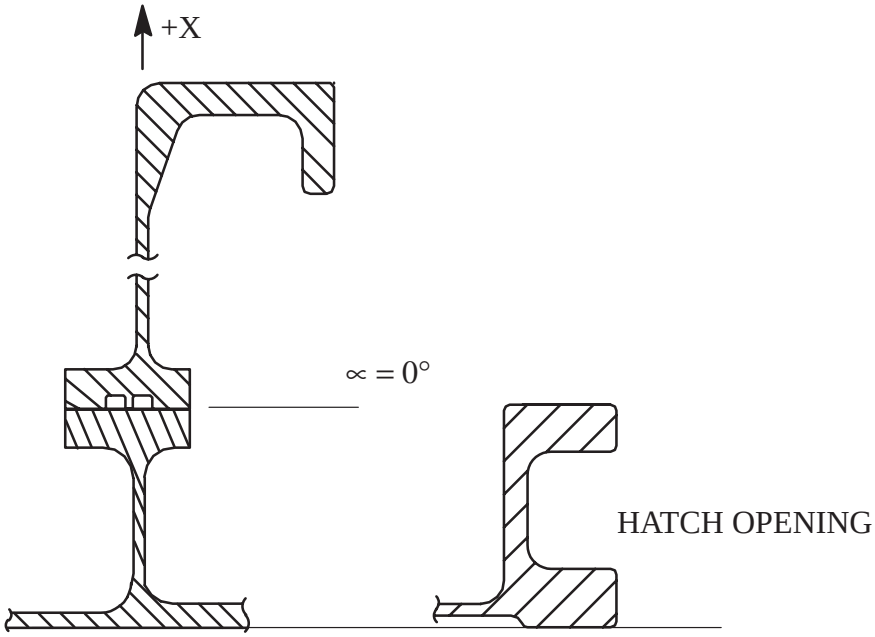

FIGURE 3.2.1.1.3−1 DEFINITION OF BULKHEAD DEFLECTION PARAMETERS − UNDEFORMED STATE

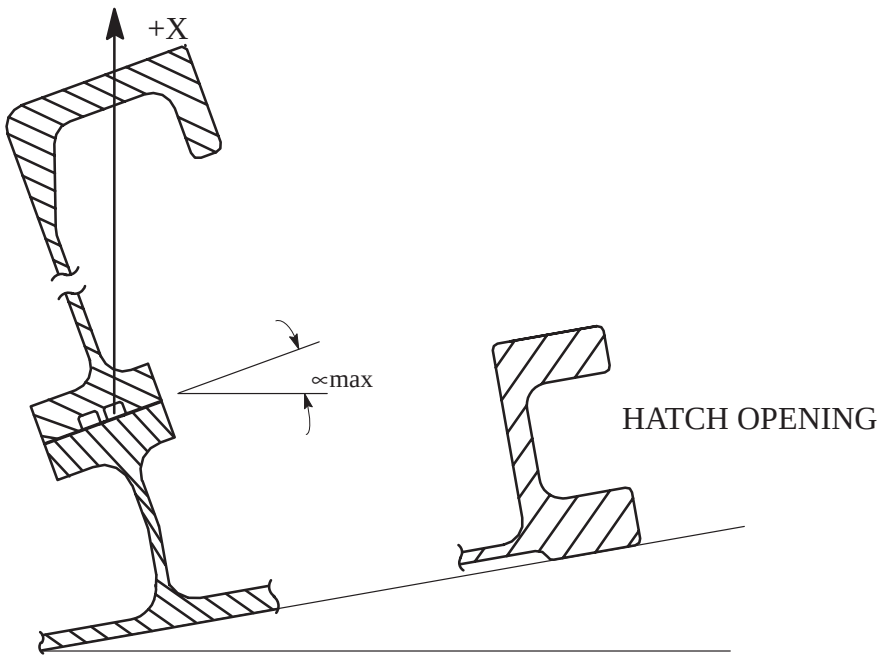

FIGURE 3.2.1.1.3−2 DEFINITION OF BULKHEAD DEFLECTION PARAMETERS − DEFORMED STATE (∝max)

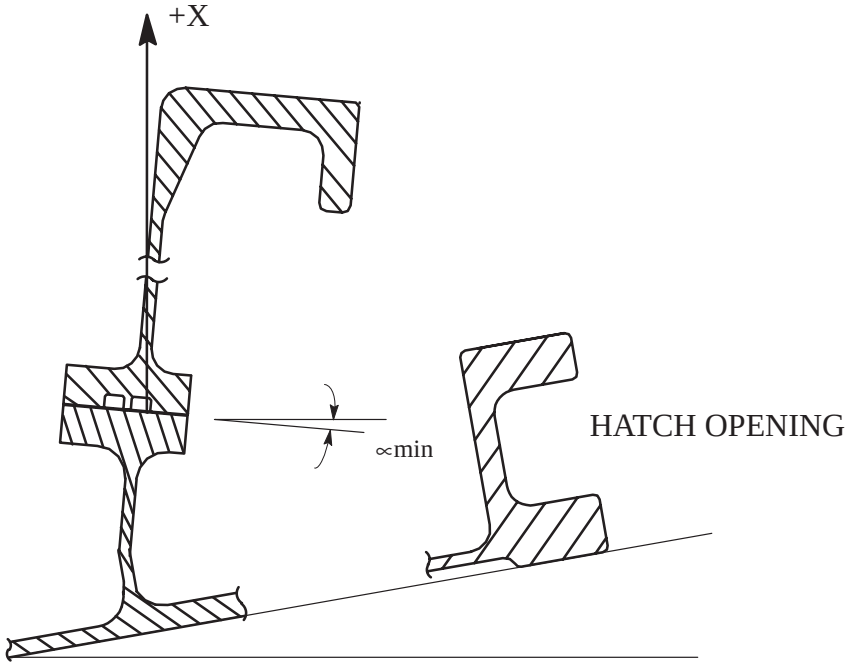

FIGURE 3.2.1.1.3−3 DEFINITION OF BULKHEAD DEFLECTION PARAMETERS − DEFORMED STAT (∝min)

3.2.1.3 PASSIVE CBM−TO−MODULE INTERFACE DEFLECTION LIMITATIONS

The maximum allowable deflections and rotations at the passive CBM−to−module interface due to pressure are limited to the values provided in the following subparagraphs. Linear tolerances in Table 3.1.6.1−1 do not apply to the values in the following subparagraphs.

This data was obtained from finite element models of the Common Module, MPLM, Node and JEM/Experiment Logistics Module (ELM) Axial Ports with a passive CBM ring attached at the CBM−to−module interface. An internal pressure of 15.2 psi at 0 g was applied to the Module inducing deformations into the CBM in its preberthed state (Hatch closed condition). The 15.2 psi is considered the worst−case loading event.

3.2.1.3.1 RADIAL DEFORMATIONS

The maximum allowable radial deformations of the passive CBM−to−module interface are shown in Figure 3.2.1.3.1−1, Passive CBM−to−Module Interface Radial Displacements. These values are relative changes in the radius of the passive CBM−to−module interface with respect to its undeformed shape.

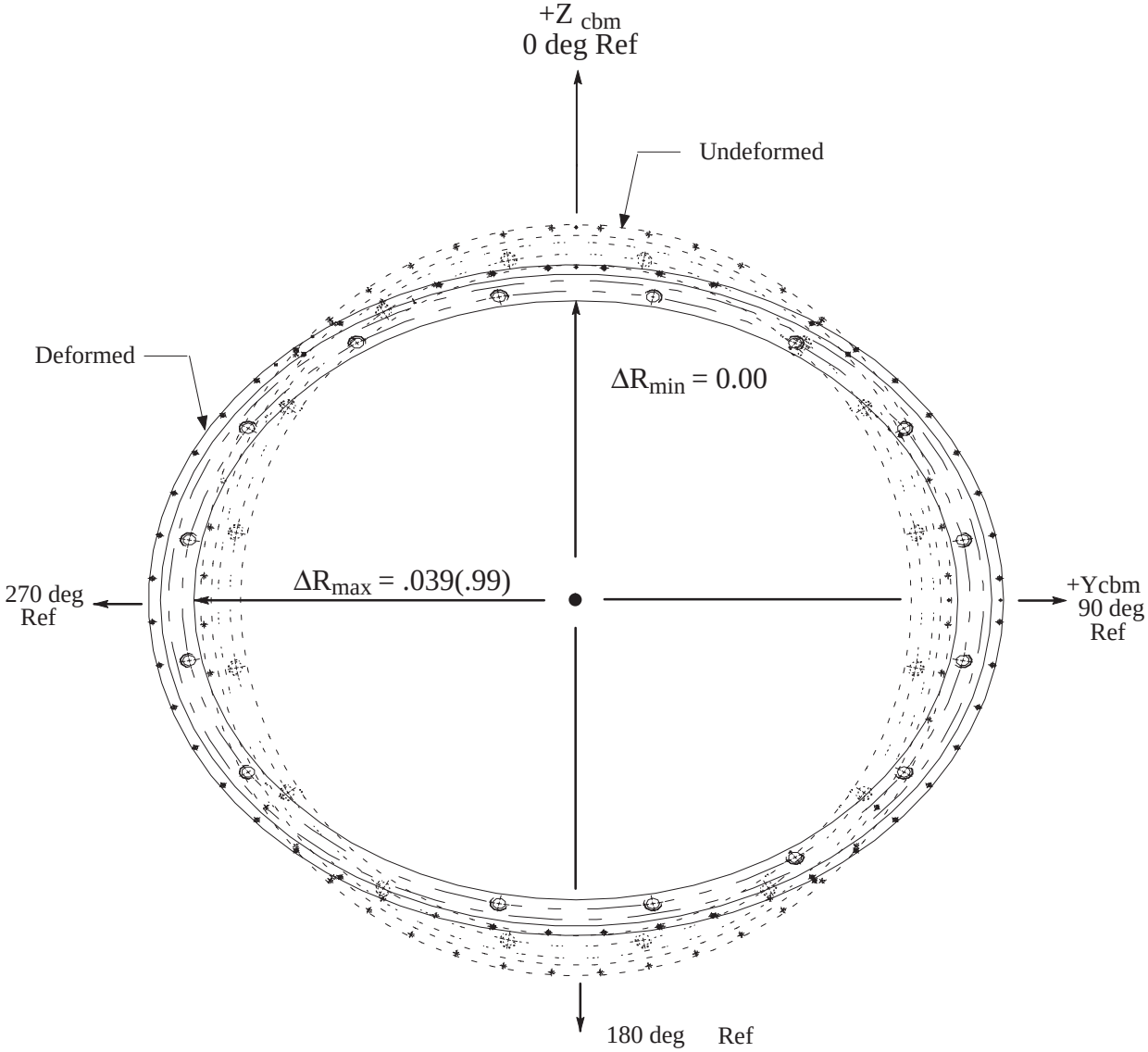

Linear tolerances in Table 3.1.6.1−1 do not apply.

Note: Deformed condition is shown exaggerated. The intent of this figure is to show a pictorial definition of ΔR_{min} and $\Delta R_{max.}$ ΔR_{max} and ΔR_{min} are constrained to occur in the general orientation along the Z or Y CBM axis. [0/180 deg or 90/270 deg ref (+/− 11.25 deg)]

FIGURE 3.2.1.3.1−1 PASSIVE CBM−TO−MODULE INTERFACE RADIAL DISPLACEMENTS

3.2.1.3.2 DIFFERENTIAL DISPLACEMENT ALONG THE X_{CBM} AXIS

Differential axial displacement (ΔX) of any point on the passive CBM−to−module interface will not exceed .024 in (.61 mm). Differential axial displacement (ΔX) = $X_J - X_i$ where X_i and X_J = actual X displacement of any point on the passive CBM−to−module interface as shown in Figure 3.2.1.1.2−1. The ΔX over any 7.5 degrees region will not exceed .005 in (.13 mm).

3.2.1.3.3 TANGENTIAL ROTATIONS

Tangential Rotations ($\propto$) at the passive CBM−to−module interface are within −.060 degrees ≤ $\propto$ ≤ +.375 degrees as defined in Figures 3.2.1.1.3−1, 3.2.1.1.3−2, and 3.2.1.1.3−3.

3.2.2 STRUCTURAL MATHEMATICAL MODELS

The ACBM/PCBM validated structural mathematical model is delivered to the Prime. Prime will deliver model to other Product Groups (PG)s and International Partners (IP)s controlled and documented in D683−85132. The model includes the ACBM/PCBM assembly finite element model, geometries, materials, and physical properties. The ACBM/PCBM structural mathematical model for Attached Pressurized Module (APM) analysis is described and documented in CLS−TN−AI−0049, CBM and Hatch Static Mathematical Model Description.

3.3 MECHANICAL INTERFACES

3.3.1 GENERAL

The CBM−to−module mechanical interfaces consist of the CBM attachment mechanism, seal, and Active CBM motor controller interfaces.

3.3.2 ATTACHMENT MECHANISMS

3.3.2.1 COMMON BERTHING MECHANISM−TO−MODULE ATTACHMENT

The CBM is secured to the module by bolts. CBM Bolt circle locations and patterns are shown in Figure 3.3.2.1−1, Passive CBM−to−Module Attachment Bolt Circles and Indexing Pin Locations; Figure 3.3.2.1−2, Active CBM−to−Module Attachment Bolt Circles and Indexing Pin Locations; Figure 3.3.2.1−3, Active CBM−to−Module Attachment Bolt Circles and Locations (View A). Module Bolt Hole Locations are shown in Figure 3.3.2.1−4, Module−to−Passive CBM Attachment Bolt Circles Hole Locations; Figure 3.3.2.1−5, Module−to−Active CBM Attachment Bolt Circles Hole Locations; and Figure 3.3.2.1−6, Module−to−Active CBM Attachment Bolt Circles Hole Locations (View B). Flatness requirements, bolt details, and the −A− datum definition are shown in Figure 3.3.2.1−7, Attachment Fasteners Configuration. Details of the CBM seals and flanges are shown in Figure 3.3.2.1−8, Passive CBM Flange Detail and Seal Configuration, and Figure 3.3.2.1−9, Active CBM Flange Detail and Seal Configuration. Details of the module flange are shown in Figure 3.3.2.1−10, Module Flange Detail at the CBM−to−Module Interface, and Figure 3.3.2.1−11, Module Flange Detail at the CBM−to−Module Interface (View H).

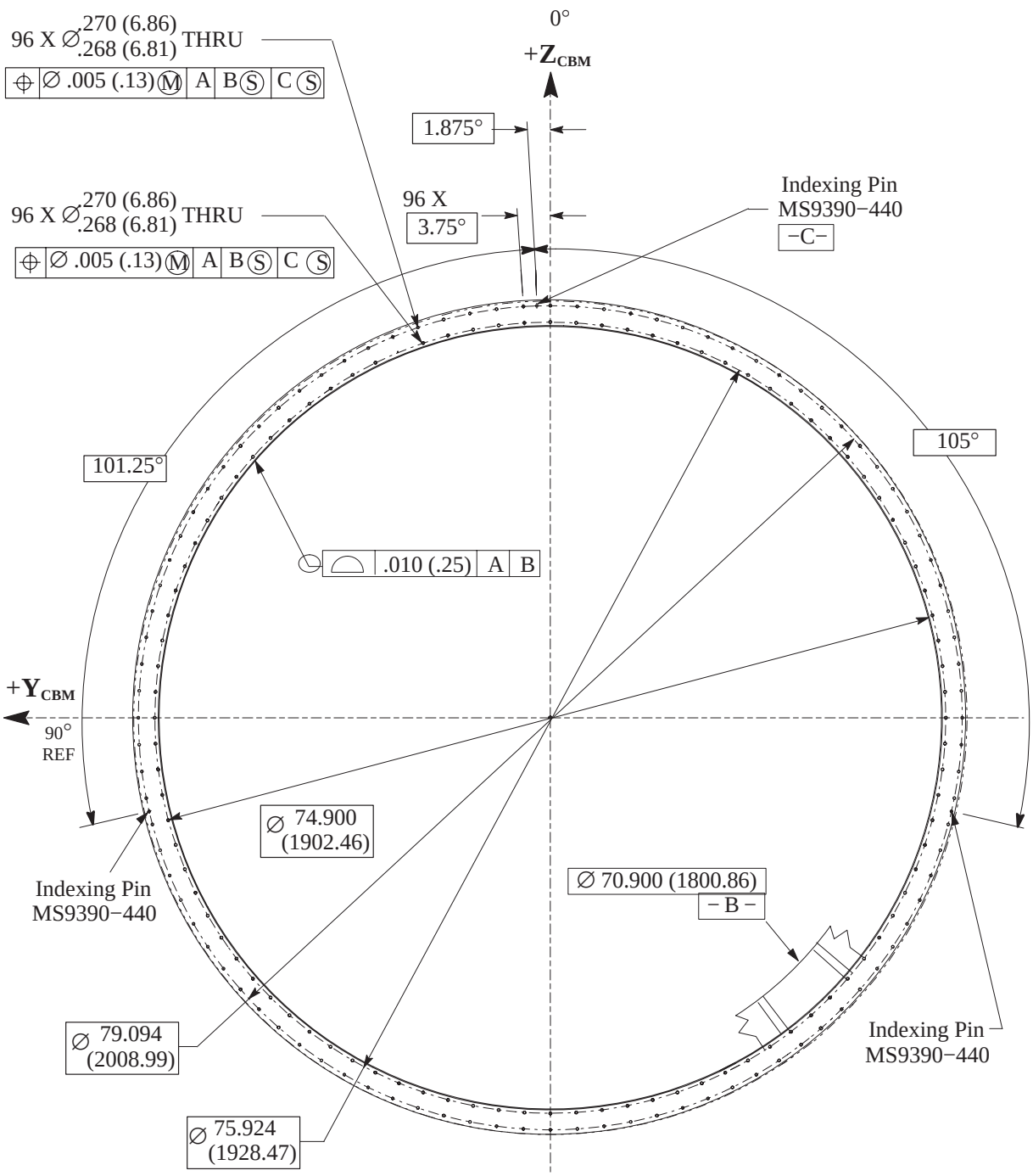

View in the $+X_{CBM}$ direction looking towards the PCBM−to−ACBM flange.

NOTES: (1) Datum −A− per Figure 3.3.2.1−7.

FIGURE 3.3.2.1−1 PASSIVE CBM−TO−MODULE ATTACHMENT BOLT CIRCLES AND INDEXING PIN LOCATIONS

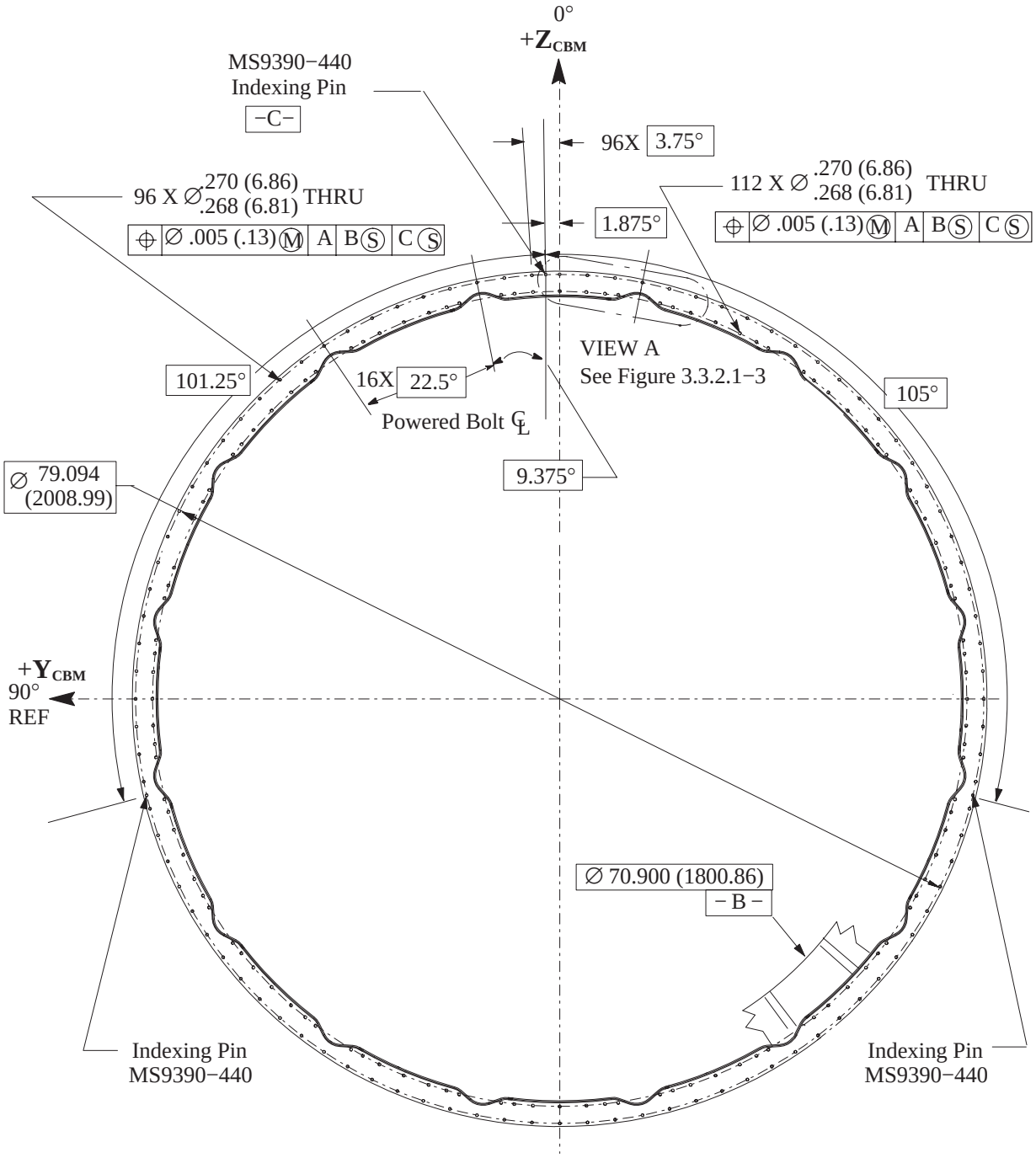

View in the $+X_{CBM}$ direction looking towards the ACBM−to−PCBM flange.

NOTES: (1) Datum −A− per Figure 3.3.2.1−7.

FIGURE 3.3.2.1−2 ACTIVE CBM−TO−MODULE ATTACHMENT BOLT CIRCLES AND INDEXING PIN LOCATIONS

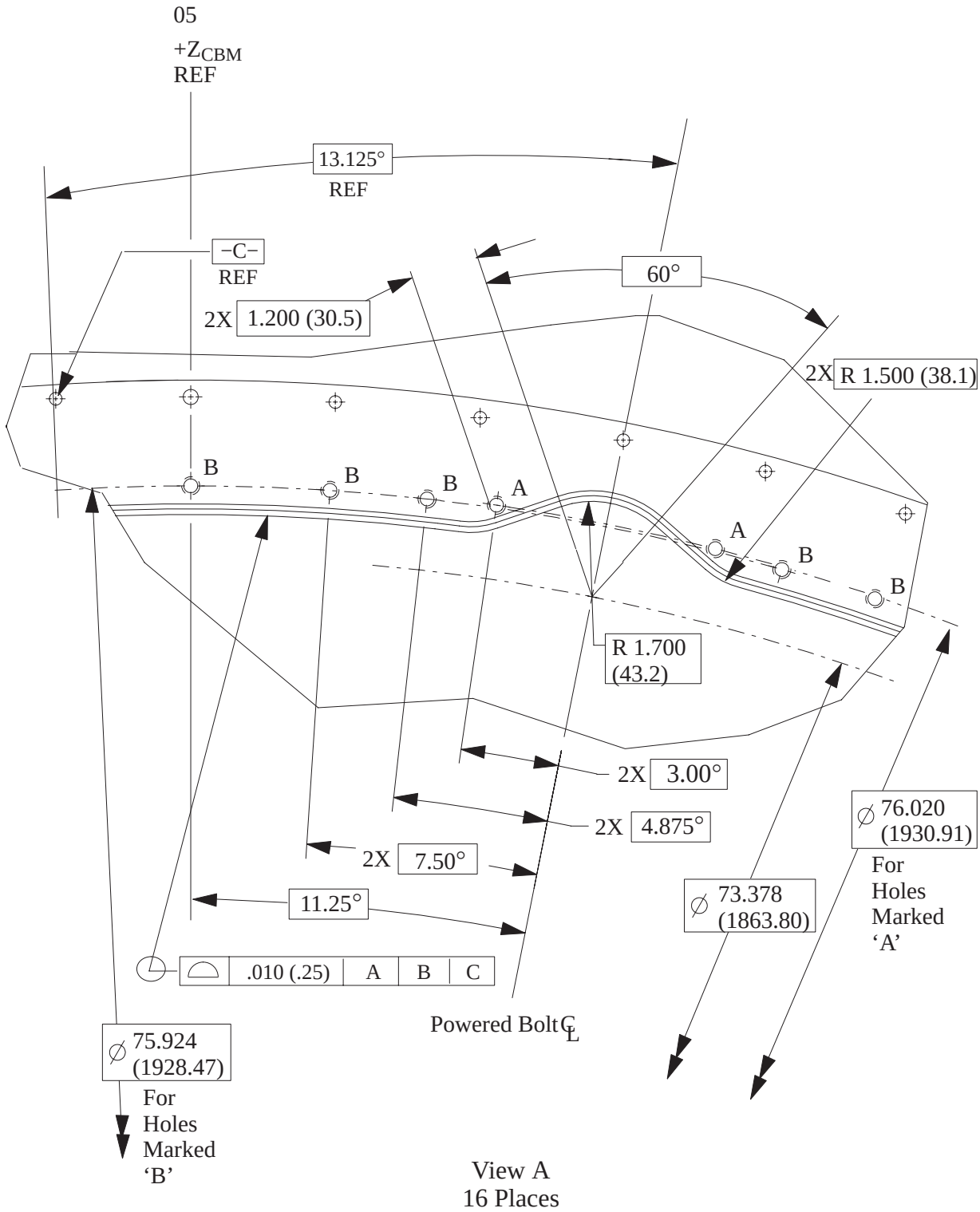

FIGURE 3.3.2.1−3 ACTIVE CBM−TO−MODULE ATTACHMENT BOLT CIRCLES AND INDEXING PIN LOCATIONS (VIEW A)

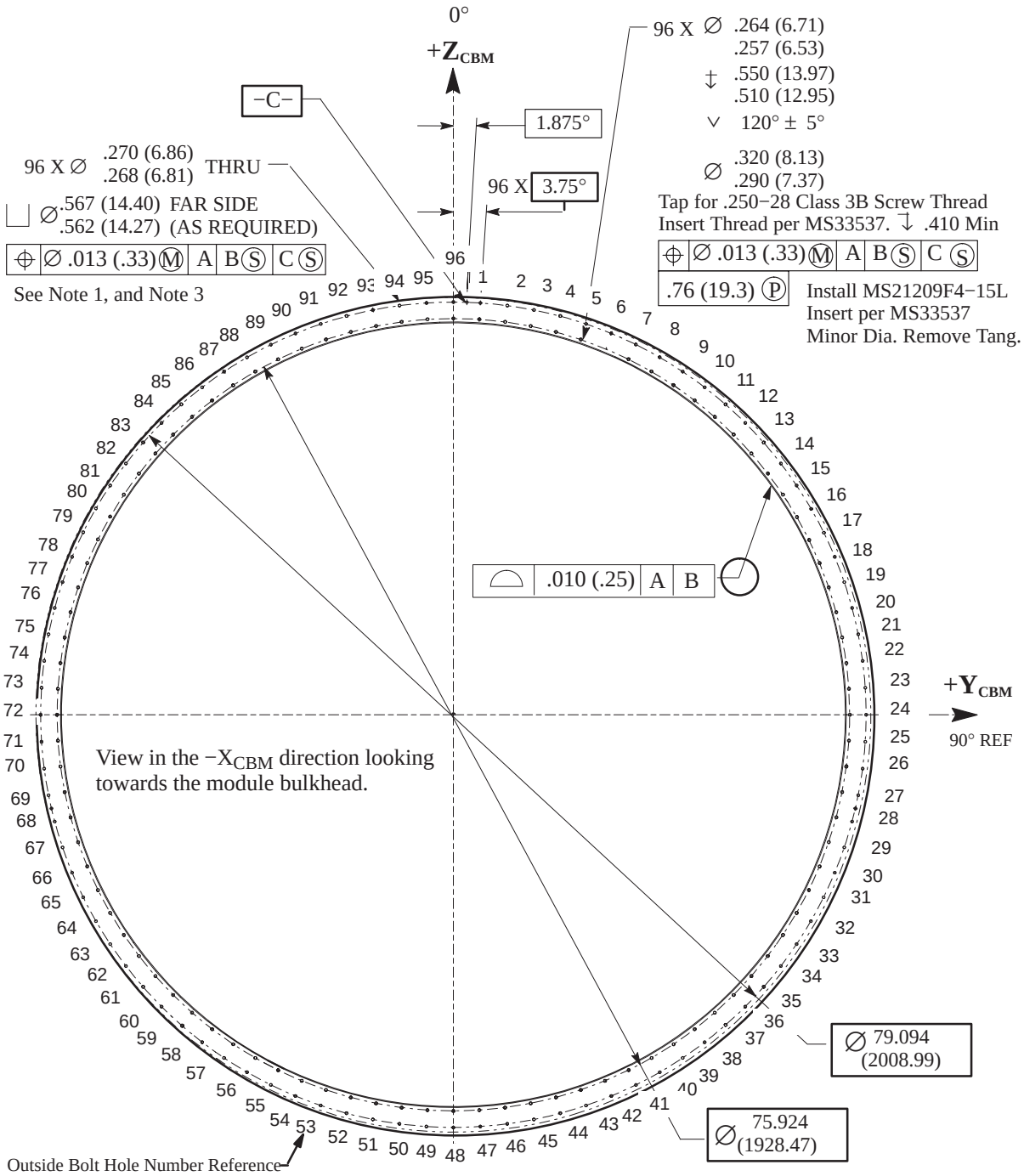

NOTES: (1) If location does not allow a thru hole, drill and tap hole and install an MS21209F4−15L Insert per above instructions.

(2) Datums −A− and −B− shown on Figure 3.3.2.1−10.

(3) Bolt Hole Centering Tolerance .0065 for ESA and ASI only.

FIGURE 3.3.2.1−4 MODULE−TO−PASSIVE CBM ATTACHMENT BOLT CIRCLES AND HOLE LOCATIONS

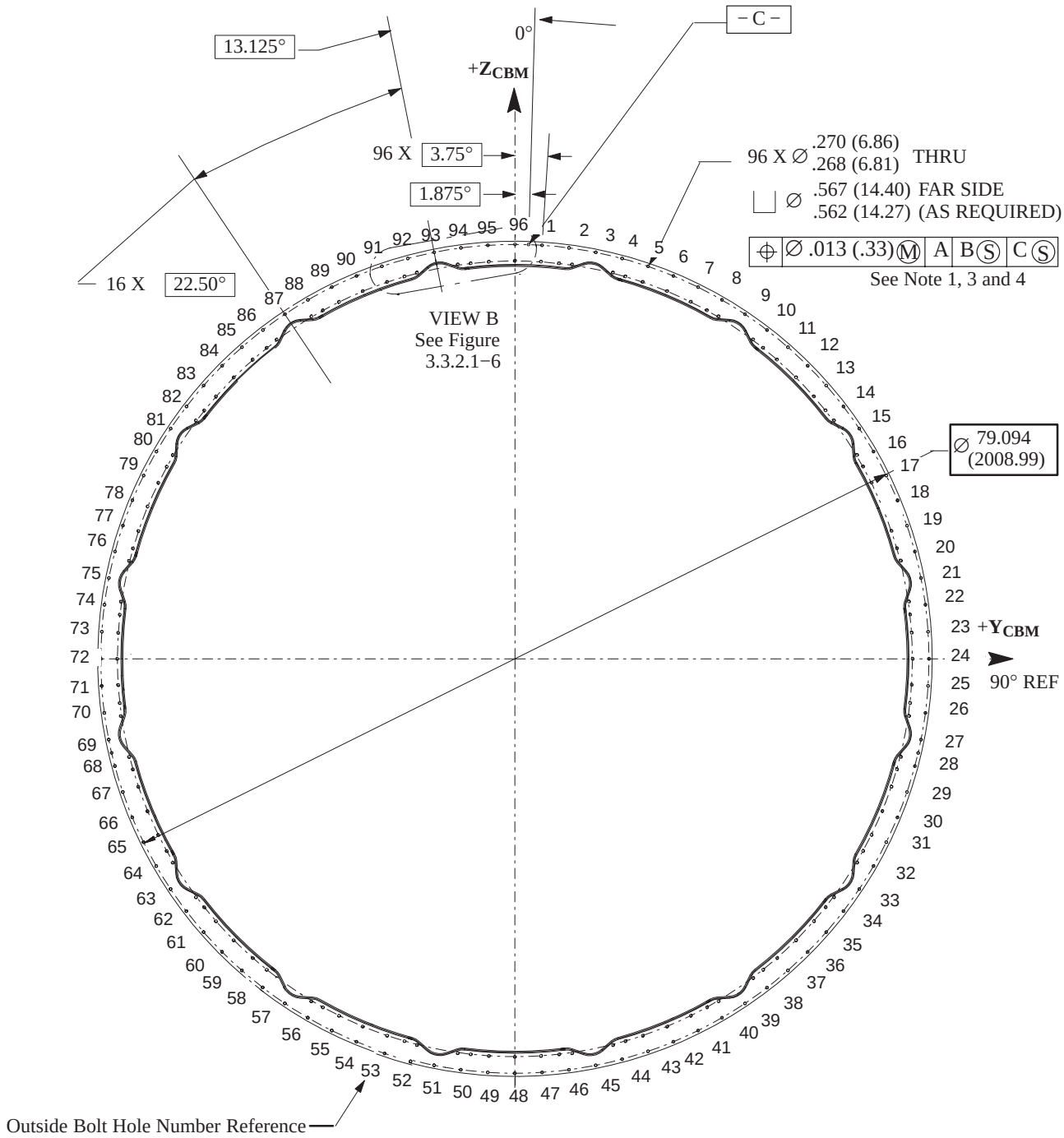

View in the $-X_{CBM}$ direction looking towards the module bulkhead.

NOTES: (1) If location does not allow a thru hole, drill and tap hole and install an MS21209F4−15L Insert per instructions on Figure 3.3.2.1−4.

(2) Datums −A− and −B− shown on Figure 3.3.2.1−10.

(3) Bolt holes centering tolerance 0.0065 for ASI only.

(4) For Nodes 2 and 3 Radial port holes: 4, 1l, 13, 22, 26, 35, 37, 44, 52, 59, 61, 70, 74, 83, 85, 92 are blind.. On these holes install insert type MS21209F4−l5L as per instructions of Figure 3.3.2.1−4.

FIGURE 3.3.2.1−5 MODULE−TO−ACTIVE CBM ATTACHMENT BOLT CIRCLES HOLE LOCATIONS

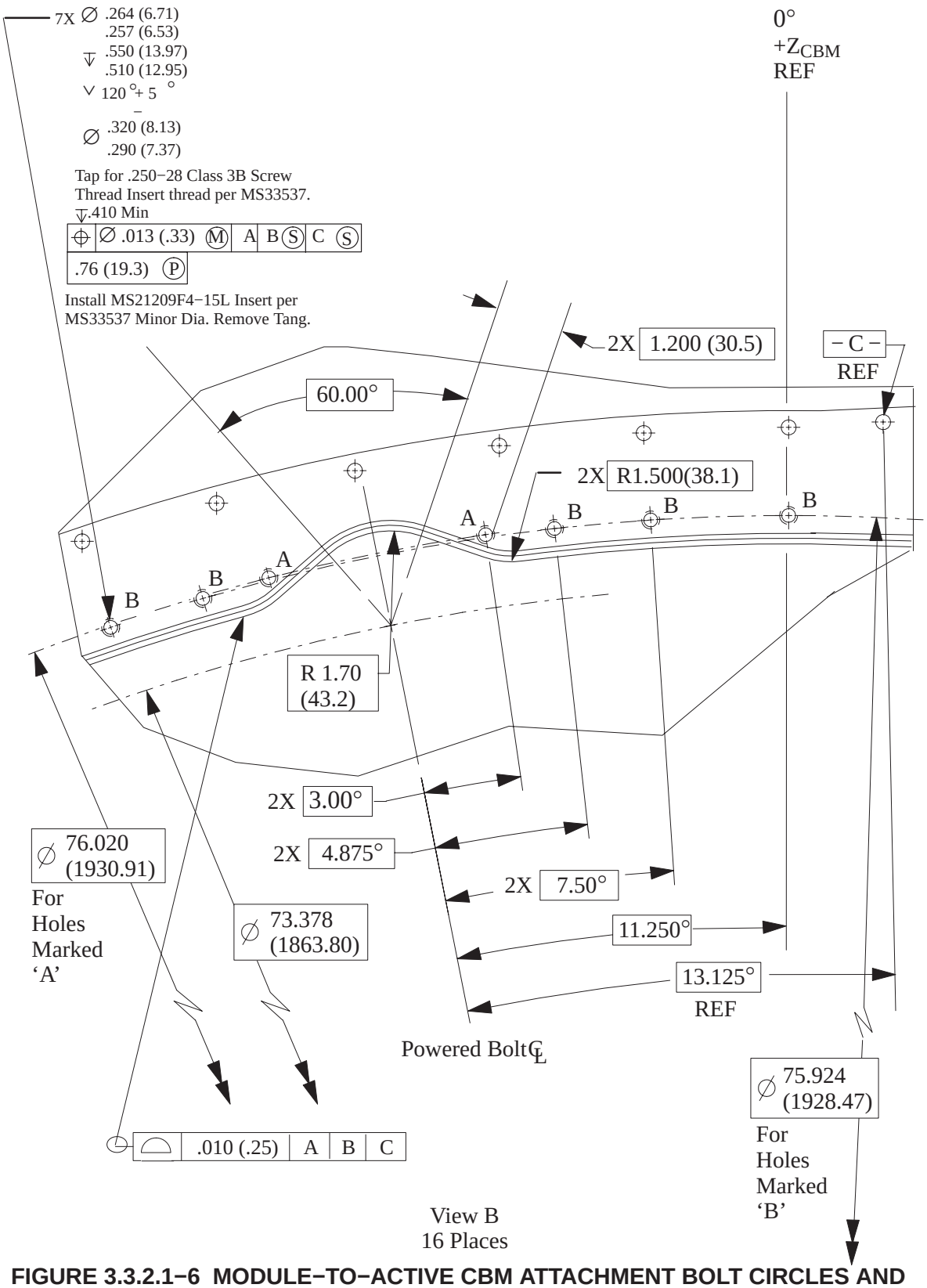

FIGURE 3.3.2.1−6 MODULE−TO−ACTIVE CBM ATTACHMENT BOLT CIRCLES AND INDEXING HOLE LOCATIONS (VIEW B)

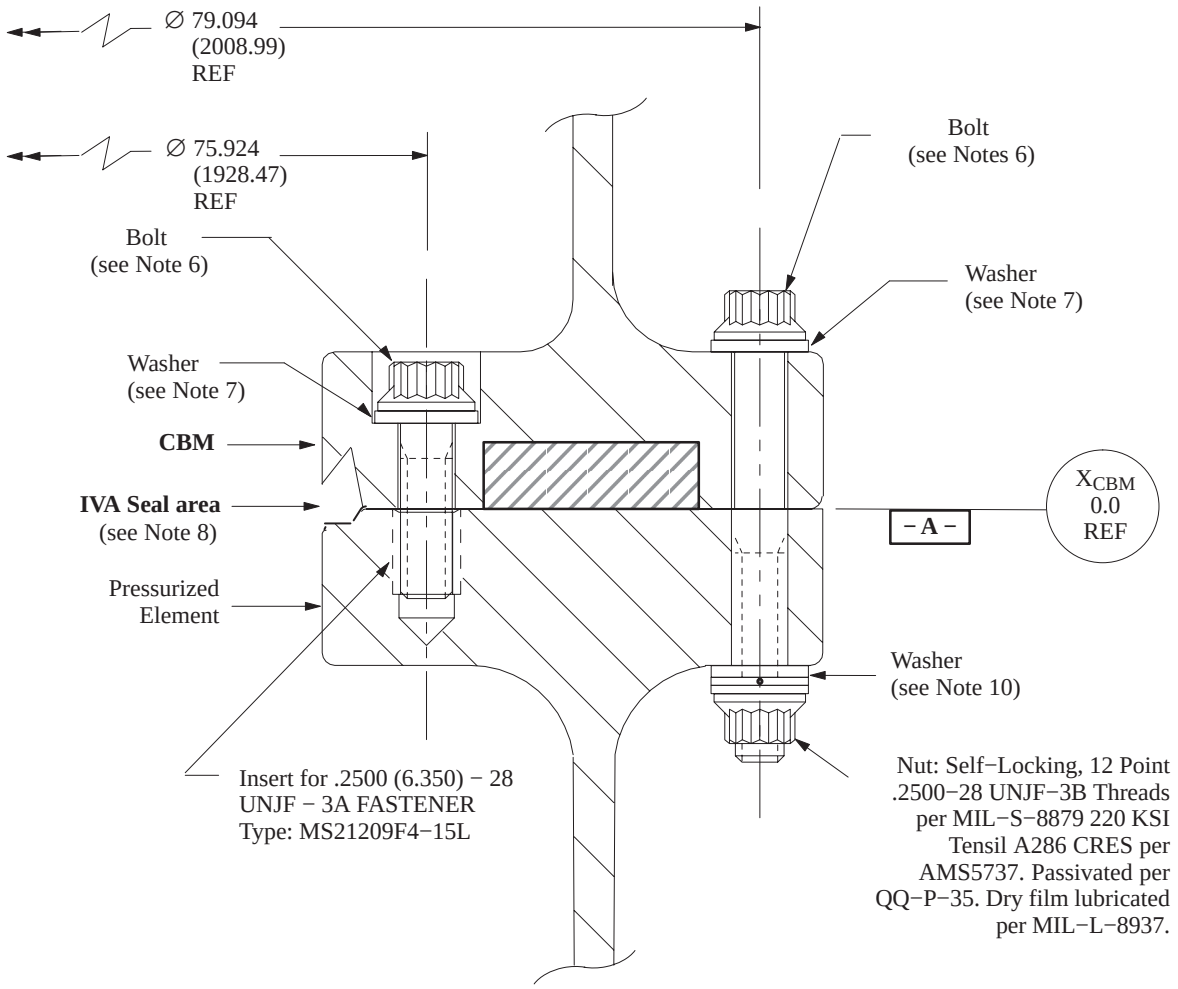

= See Figure 3.3.2.1−8 for Passive CBM Seal Configuration and Figure 3.3.2.1−9 for Active CBM Seal Configuration

Notes:
1) Module I/F Flange Material: JAXA: AL2219T852, ESA: AL2219T852, ASI: AL2219T852.
2) CBM Material: AL2219T852 or T851.
3) Bolt torque requirements and sequence provided with CBM installation data.
4) Bolts, nuts, and washers are delivered by NASA/PG−3 with the CBM.
5) Use a blind insert and bolt at locations where thru hole cannot be placed.
6) Bolt: 12 Point Head .2500−28 UNJF−3A 200 KSI Min. Tensile A286 CRES per AMS 5737 (Hind holes) or 260 KSI Min. Tensile MP35N per AMS 5844 (through holes) except fasteners for Bolt Hole Numbers Ref. #3, 5, 10, 12, 14, 15, 21, 23, 24, 25, 27, 33, 34, 36, 38, 43, 45, 51, 53, 58, 60, 62, 63, 69, 71, 72, 73, 75, 81, 82, 84, 86, 91 and 93 are the .2500−28 UNJF−3A thread, .2656 shank, MP35N (through holes) material 34 places (PN:94658X4−28). Passivated per QQ−P−35.
7) Washers: 0.250 A286 CRES per AMS 5525. Passivated per QQ−P−35.
8) Not applicable for MPLM and HTV pressurized elements.
9) Ref torque for fasteners is 95 to 100 in-lbs (10.7 to 11.3 Nm) per MSFC-STD-486 except MP35N fasteners..
10) Washer: 0.250 A286 CRES per AMS 5732; passivated per QQ−P−35; preload indicating type,nominal preload value 3600 lbs. ± 10%.

FIGURE 3.3.2.1−7 ATTACHMENT FASTENERS CONFIGURATION

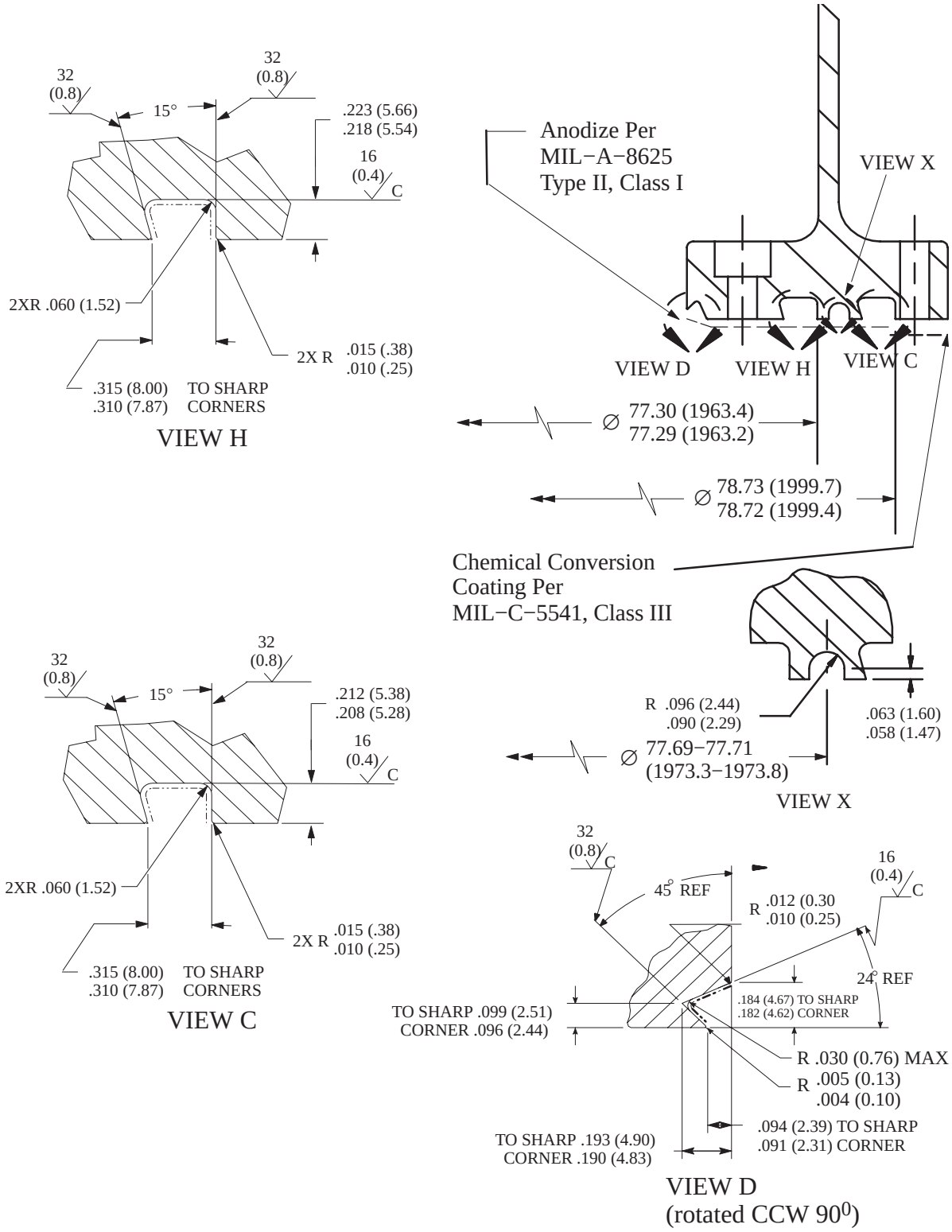

Note: View D not applicable for MPLM Pressurized Elements.

FIGURE 3.3.2.1−8 PASSIVE CBM FLANGE DETAIL AND SEAL CONFIGURATION

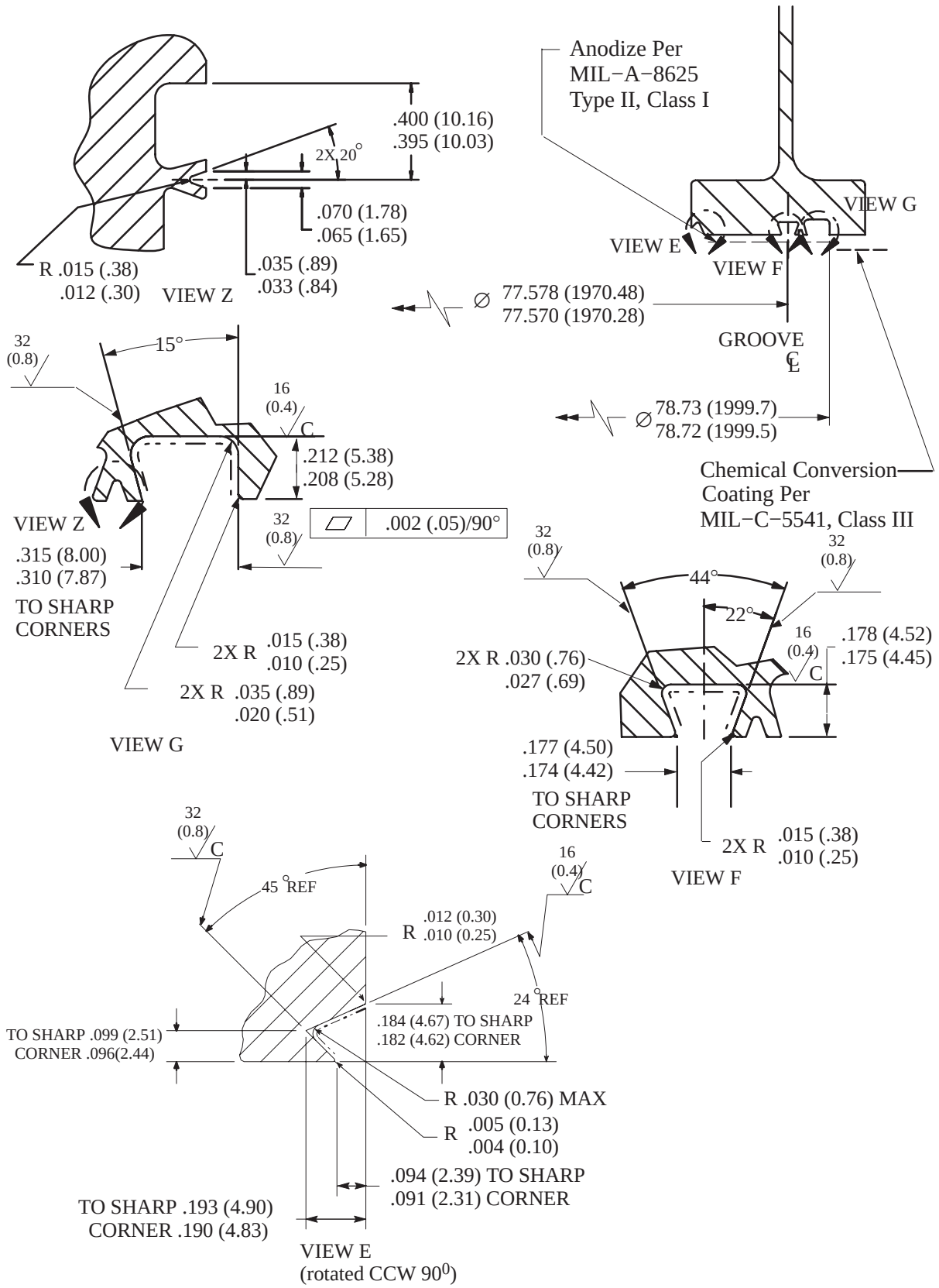

FIGURE 3.3.2.1−9 ACTIVE CBM FLANGE DETAIL AND SEAL CONFIGURATION

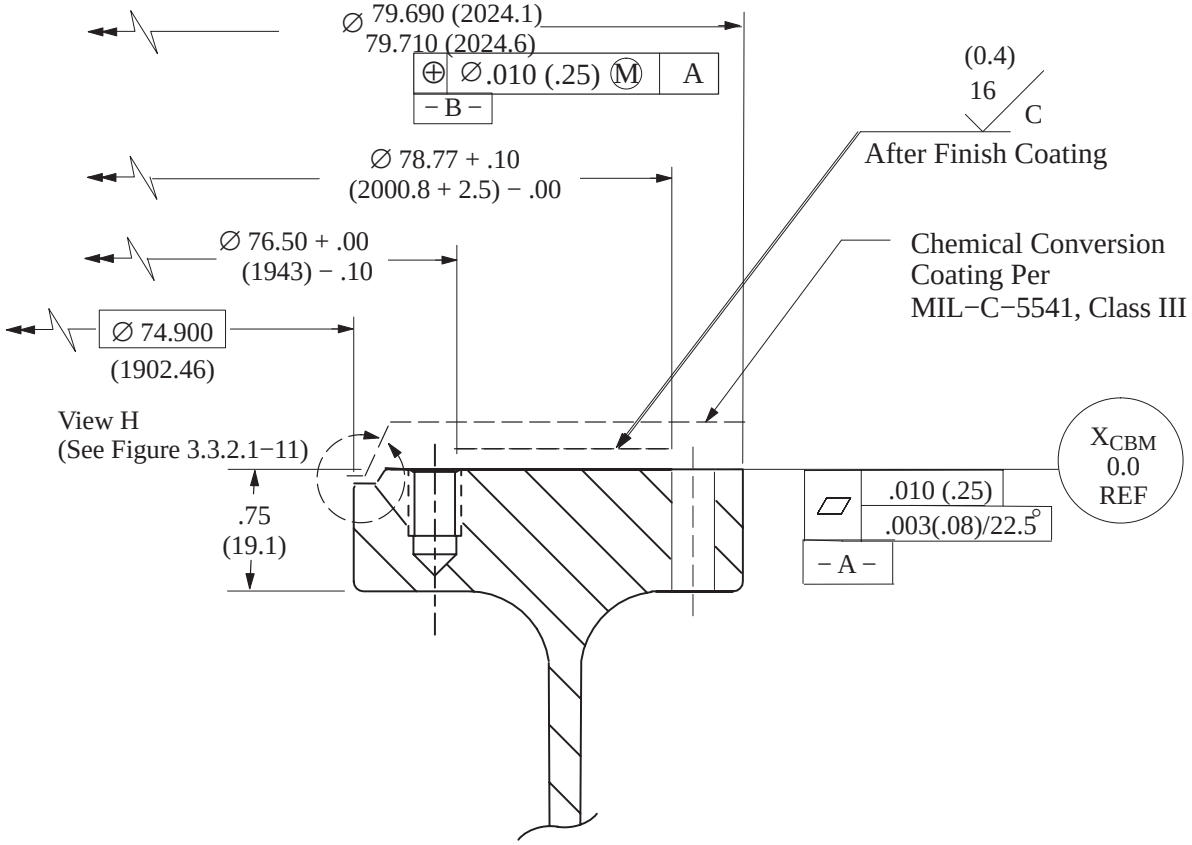

Notes: View H not applicable to MPLM and HTV Pressurized Elements.

FIGURE 3.3.2.1−10 MODULE FLANGE DETAIL AT THE CBM−TO−MODULE INTERFACE

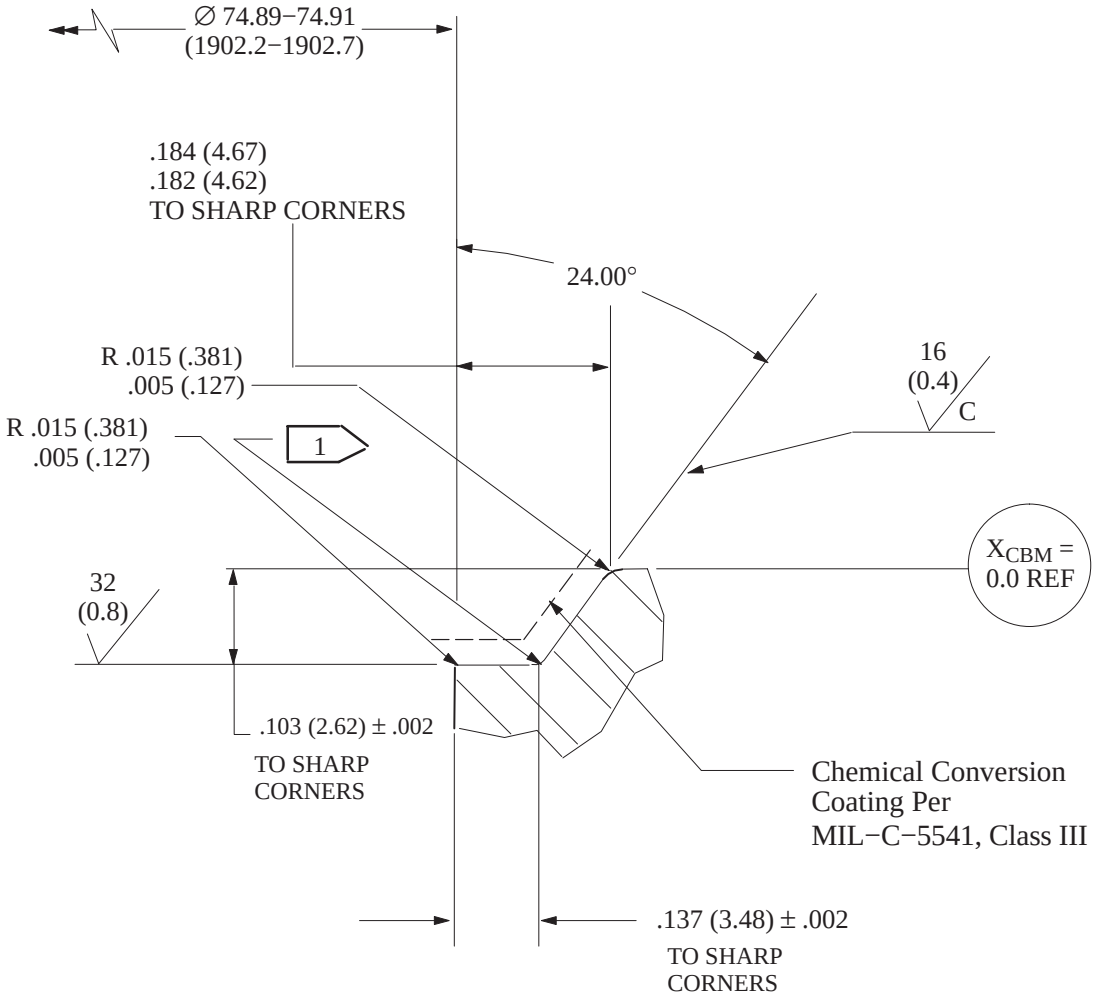

1 Blend sharp edges and blend smooth.
Radius not to exceed .015 in. (.381)

Notes: 1) Not Applicable for MPLM and HTV pressurized elements

FIGURE 3.3.2.1−11 MODULE FLANGE DETAIL AT THE CBM−TO−MODULE INTERFACE (VIEW H)

3.3.2.1.1 ALIGNMENT AND INDEXING

Alignment and indexing of the CBM on the module bulkhead is accomplished with three indexing pins located on the CBM and three indexing holes located on all module bulkheads. Indexing pin locations are defined in Figure 3.3.2.1−1 and Figure 3.3.2.1−2. Indexing hole sizes and locations are defined in Figure 3.3.2.1.1−1, Module−to−CBM Indexing Hole Locations.

3.3.2.1.2 MODULE CRITICAL DIMENSIONS

Dimensions shown in Figure 3.3.2.1.2−1, Module Critical Dimensions shall not be exceeded in order to insure proper attachment and operation of the CBM without structural interference.

3.3.2.1.3 CBM−TO−MODULE IVA SEAL ATTACHMENT

Attachment details for the Passive CBM IVA seal on the module flange are shown in Figure 3.3.2.1.3−1, Passive CBM IVA Seal Attachment. Bolt locations around the module flange are defined in Table 3.3.2.1.3−1, Passive CBM IVA Seal Angular Attachment Locations. Attachment details for the Active CBM IVA seal on the module flange are shown in Figure 3.3.2.1.3−2, Active CBM IVA Seal Attachment. Bolt locations around the module flange are defined in Table 3.3.2.1.3−2, Active CBM IVA Seal Angular Attachment Locations.

3.3.2.1.4 CBM−TO−MODULE CLOCKING

Table 3.3.2.1.4−1, CBM Installation Clocking, and Figures 3.3.2.1.4−1 through 3.3.2.1.4−4 define the Passive and Active CBM clocking relations to the associated elements. The $+Z_{CBM}$ axis equates to the reference element axis. The coordinate systems associated with the element axis is defined in the elements coordinate system, unless otherwise noted. On−orbit element−to−element clocking information is contained in the associated Element−to−Element ICDs.

3.3.2.1.5 MATCH DRILLED HOLES

On Node 2 and 3 radial ports, other than the bolts shown in Figure 3.3.2.1−7, the ACBM is fixed to the module utilizing 20 supplementary bolts. These bolts (provided by Boeing) will be installed in match drilled through holes. A drilling jig equivalent to Boeing jig DJ 683−13465 will be used to drill the position of these bolts is reported in Figure 3.3.2.1.5−1, Node 2 and Node 3 Radial Port Match Drilled Hole Location.

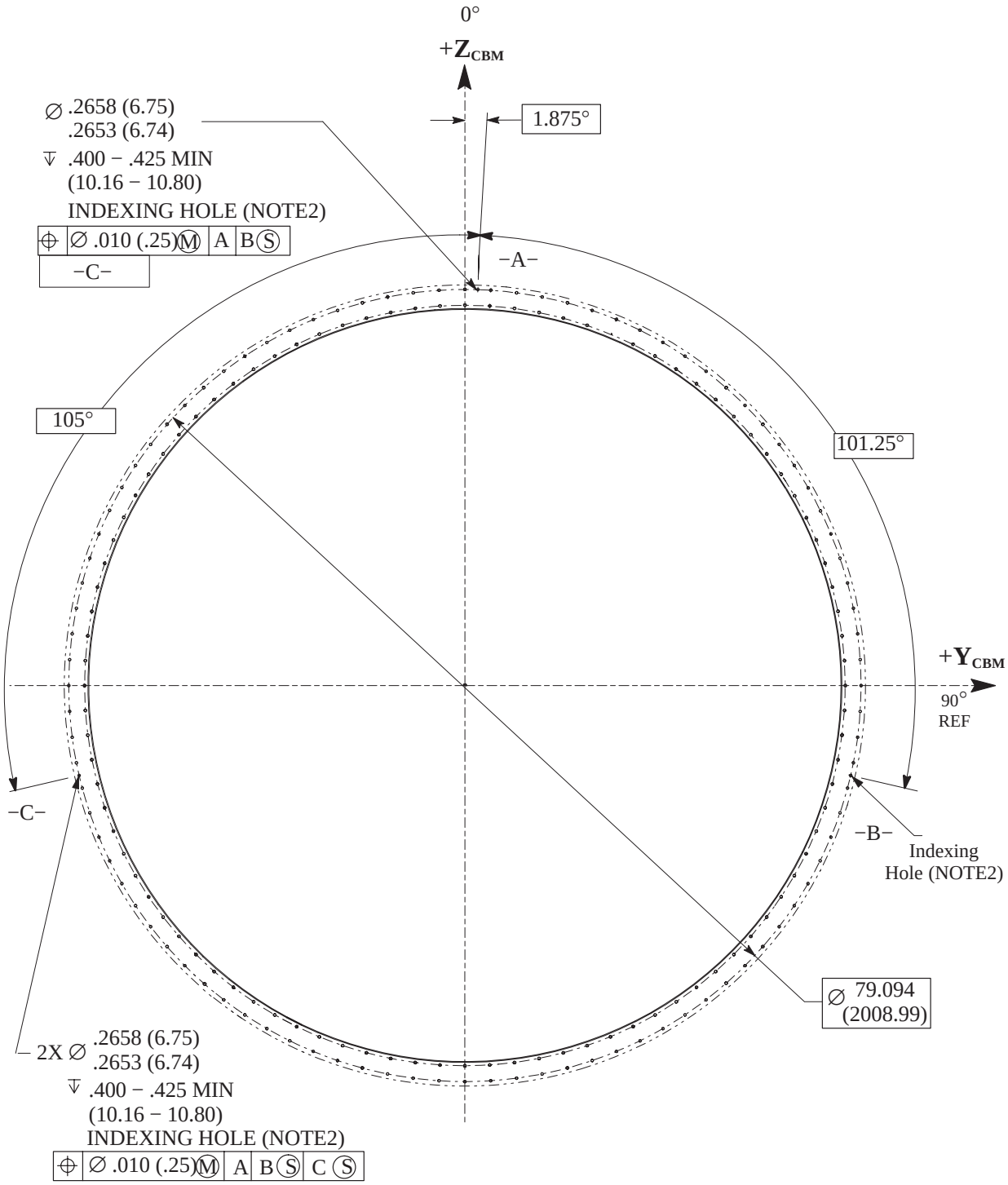

View in the $-X_{CBM}$ direction looking towards the module bulkhead.

NOTE: 1) Datums −A− and −B− shown on Figure 3.3.2.1−10.
2) Through hole allowed.

FIGURE 3.3.2.1.1−1 MODULE−TO−CBM INDEXING HOLE LOCATIONS

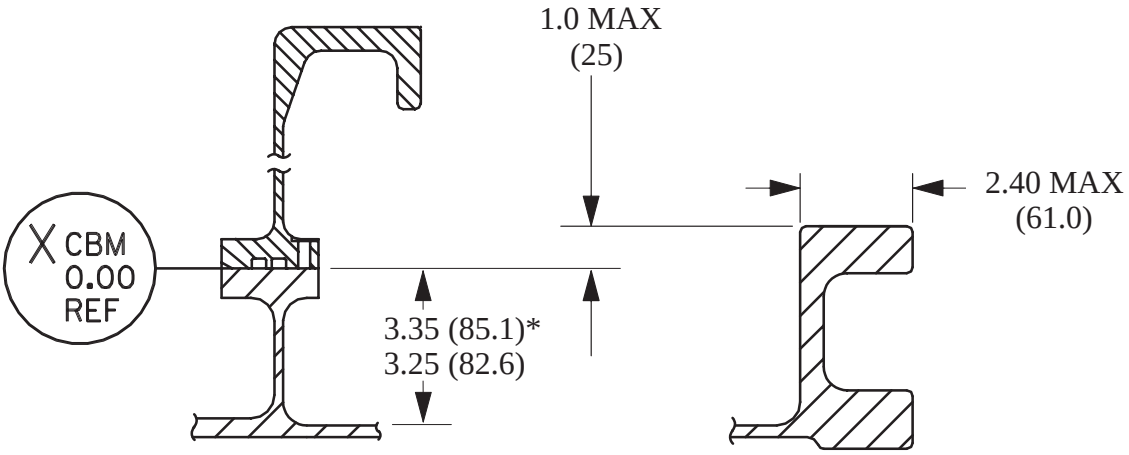

* Dimension is measured to feedthru interface plane (pressure bulkhead). Berthing plate or bulkhead structural members (gussets) may encroach on this area provided the intrusion does not violate CBM hardware envelopes.

NOTE: This is not applicable to the Pressurized Mating Adapters.

FIGURE 3.3.2.1.2−1 MODULE CRITICAL DIMENSIONS

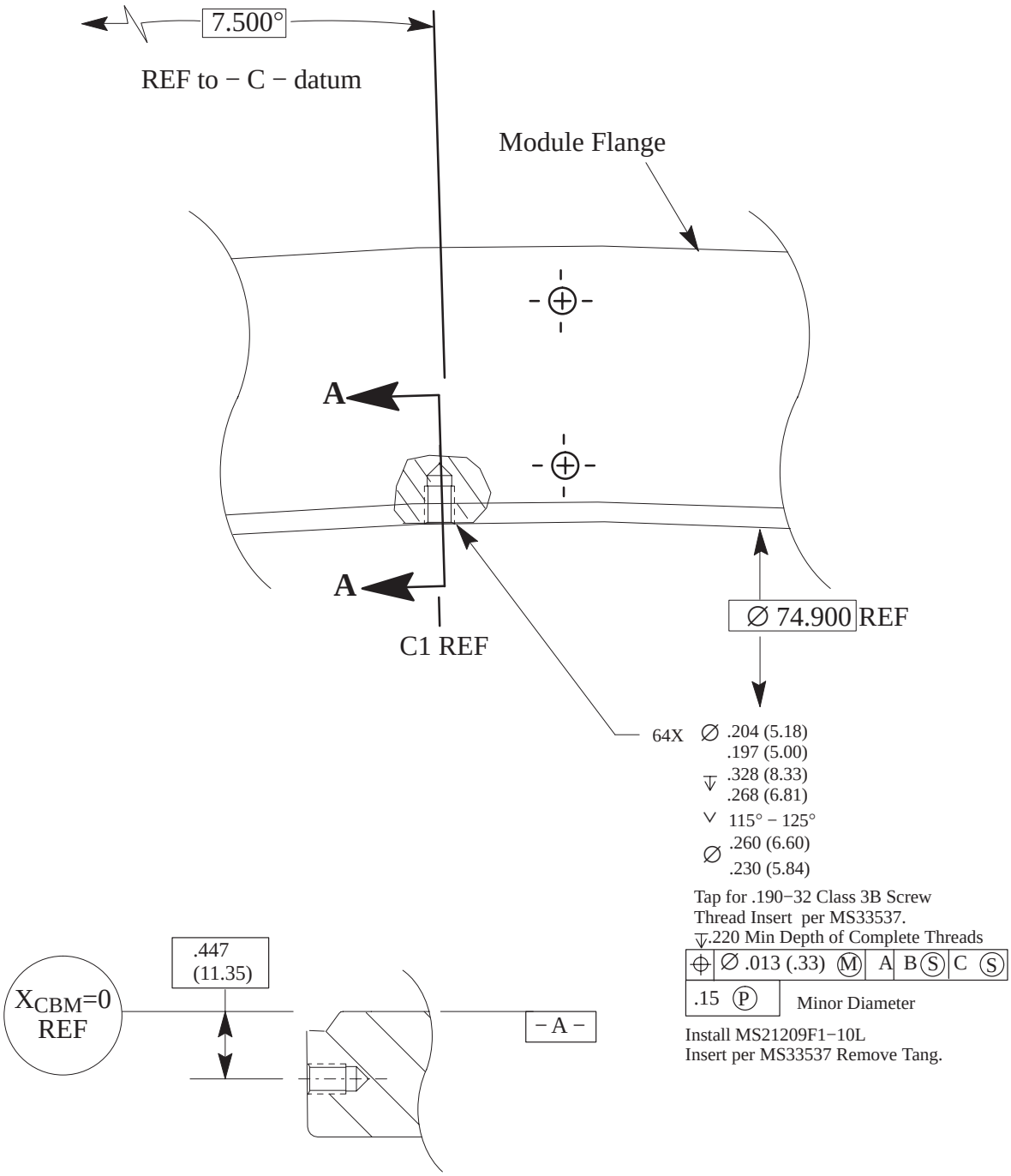

SECTION A−A

Rotated 90° Clockwise

NOTES: DATUM −B− shown on Figure 3.3.2.1−10.
DATUM −C− shown on Figure 3.3.2.1−4.

FIGURE 3.3.2.1.3−1 PASSIVE CBM IVA SEAL ATTACHMENT

TABLE 3.3.2.1.3−1 PASSIVE CBM IVA SEAL ANGULAR ATTACHMENT LOCATIONS

Ref Number	Degrees from − C − (See Notes)	Ref Number	Degrees from − C − (See Notes)
C1	7.500°	C33	187.500°
C2	12.035°	C34	192.035°
C3	15.535°	C35	195.535°
C4	22.500°	C36	202.500°
C5	30.000°	C37	210.000°
C6	36.375°	C38	216.375°
C7	39.875°	C39	219.875°
C8	46.375°	C40	226.375°
C9	49.875°	C41	229.875°
C10	56.554°	C42	236.554°
C11	59.696°	C43	239.696°
C12	67.500°	C44	247.500°
C13	75.000°	C45	255.000°
C14	80.125°	C46	260.125°
C15	83.695°	C47	263.695°
C16	92.555°	C48	272.555°
C17	96.125°	C49	276.125°
C18	101.250°	C50	281.250°
C19	108.750°	C51	288.750°
C20	116.554°	C52	296.554°
C21	119.696°	C53	299.696°
C22	126.375°	C54	306.375°
C23	129.875°	C55	309.875°
C24	136.375°	C56	316.375°
C25	139.875°	C57	319.875°
C26	146.250°	C58	326.250°
C27	153.750°	C59	333.750°
C28	160.715°	C60	340.715°
C29	164.215°	C61	344.215°
C30	168.750°	C62	348.750°
C31	176.554°	C63	356.554°
C32	179.696°	C64	359.696°

Notes:
1) − C − is located at $\theta_{CBM} = 1.875°$
2) All angles are in the $+\theta_{CBM}$ direction from Datum − C −
3) All angles are basic dimensions

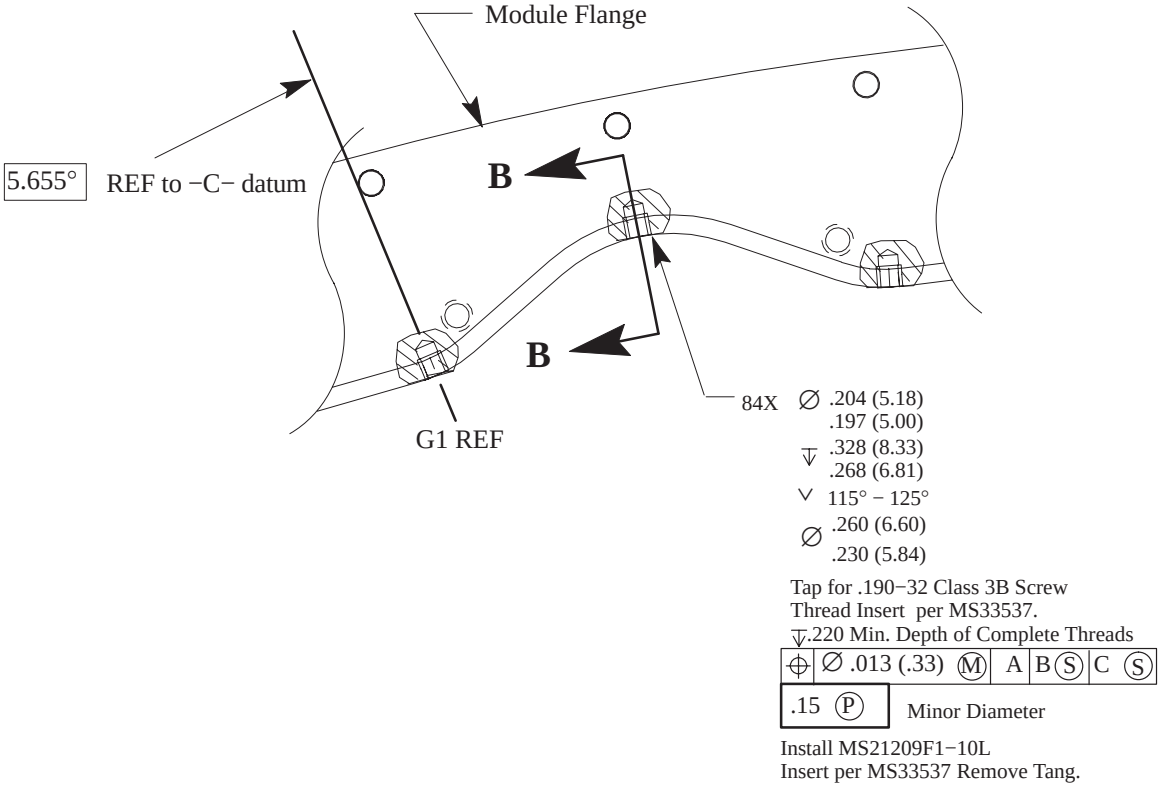

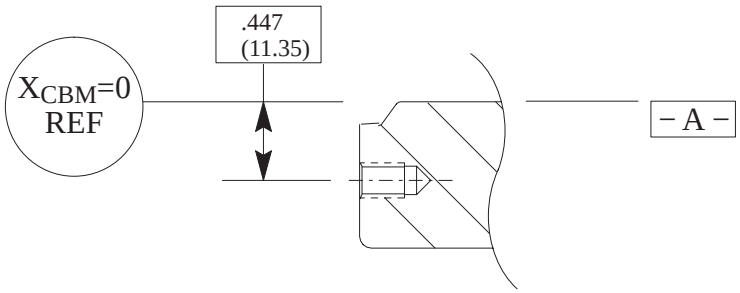

SECTION B−B

Rotated 110° Clockwise

NOTES: DATUM −B− shown on Figure 3.3.2.1−9.
DATUM −C− shown on Figure 3.3.2.1−5.

FIGURE 3.3.2.1.3−2 ACTIVE CBM IVA SEAL ATTACHMENT

TABLE 3.3.2.1.3−2 ACTIVE CBM IVA SEAL ANGULAR ATTACHMENT LOCATIONS

Ref Number	Degrees from − C − (See Notes)	Ref Number	Degrees from − C − (See Notes)
G1	5.655°	G43	185.655°
G2	9.375°	G44	189.375°
G3	15.875°	G45	195.875°
G4	19.500°	G46	199.500°
G5	21.750°	G47	201.750°
G6	28.155°	G48	208.155°
G7	31.875°	G49	211.875°
G8	35.595°	G50	215.595°
G9	40.125°	G51	220.125°
G10	43.875°	G52	223.875°
G11	46.125°	G53	226.125°
G12	50.655°	G54	230.655°
G13	54.375°	G55	234.375°
G14	58.095°	G56	238.095°
G15	64.500°	G57	244.500°
G16	66.750°	G58	246.750°
G17	73.155°	G59	253.155°
G18	76.875°	G60	256.875°
G19	80.595°	G61	260.595°
G20	83.695°	G62	263.695°
G21	92.555°	G63	272.555°
G22	95.655°	G64	275.655°
G23	99.375°	G65	279.375°
G24	103.095°	G66	283.095°
G25	109.500°	G67	289.500°
G26	111.750°	G68	291.750°
G27	118.155°	G69	298.155°
G28	121.875°	G70	301.875°
G29	125.595°	G71	305.595°
G30	130.125°	G72	310.125°
G31	133.875°	G73	313.875°
G32	136.125°	G74	316.125°
G33	140.655°	G75	320.655°
G34	144.375°	G76	324.375°
G35	148.095°	G77	328.095°
G36	154.500°	G78	334.500°
G37	156.750°	G79	336.750°
G38	160.250°	G80	340.250°
G39	166.875°	G81	346.875°
G40	170.595°	G82	350.595°
G41	177.000°	G83	357.000°
G42	179.250°	G84	359.250°

Notes:
1) − C − is located at $\theta_{CBM} = 1.875°$
2) All angles are in the $+\theta_{CBM}$ direction from Datum − C −
3) All angles are basic dimensions

TABLE 3.3.2.1.4−1 CBM INSTALLATION CLOCKING

CBM	CBM Coordinate	Element Coordinate
MPLM PCBM	+Z = 0º	+Z = 0º
Z1 Truss PCBM	+Z = 0º	−Y = 0º
Lab PCBM	+Z = 0º	+Z = 0º
Lab ACBM	+Z = 0º	+Z = 0º
Node 1 ACBM (Aft)	+Z = 0º	−Z = 0º (see Note 1)
Node 1 ACBM (Fwd)	+Z = 0º	−Z = 0º (see Note 1)
Node 1 ACBM (Zen)	+Z = 0º	−Y = 0º (see Note 1)
Node 1 ACBM (Nad)	+Z = 0º	+Y = 0º (see Note 1)
Node 1 ACBM (Stbd)	+Z = 0º	+Z = 0º (see Note 1)
Node 1 ACBM (Port)	+Z = 0º	−Z = 0º (see Note 1)
PMAs PCBM	+Z = 0º	+X = 0º
Airlock PCBM	+Z = 0º	+Z = 0º
Cupola PCBM	+Z = 0º	See Note 2
ELM PCBM	+Z = 0º	+Z= 0º
JEM PCBM	+Z = 0º	+Z = 0º
JEM ACBM	+Z = 0º	−Y = 0º
APM PCBM	+Z = 0º	−Z = 0º
Hab PCBM	+Z = 0º	+Z = 0º
Hab ACBM	+Z = 0º	+Z = 0º
Node 2 PCBM (Aft)	+Z = 0º	−Z = 0º
Node 2 ACBM (Fwd)	+Z = 0º	−Z = 0º
Node 2 ACBM (Zen)	+Z = 0º	−Y = 0º
Node 2 ACBM (Nad)	+Z = 0º	+Y = 0º
Node 2 ACBM (Stbd)	+Z = 0º	+Z = 0º
Node 2 ACBM (Port)	+Z = 0º	−Z = 0º
Node 3 PCBM (Zen)	+Z = 0º	+Y = 0º
Node 3 ACBM (Nad)	+Z = 0º	+Z = 0º
Node 3 ACBM (Fwd)	+Z = 0º	+Y = 0º
Node 3 ACBM (Aft)	+Z = 0º	−Y = 0º
Node 3 ACBM (Port)	+Z = 0º	−Z = 0º
Node 3 ACBM (Stbd)	+Z = 0º	+Z = 0º
HTV PCBM	+Z = 0º	+Y = 0º

NOTES: (1) Node1 element coordinate not included due to the Node1 45 degree offset coordinate system. On−orbit Node element coordinate system used as depicted below.

(2) PCBM Installation clocking is shown in Figure 3.3.2.1.4−4.

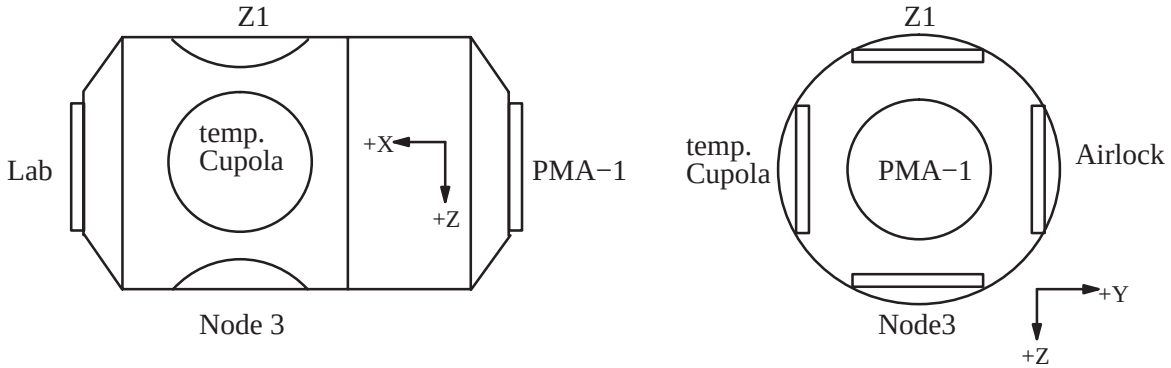

FIGURE 3.3.2.1.4−1 NODE 1 CBM CLOCKING

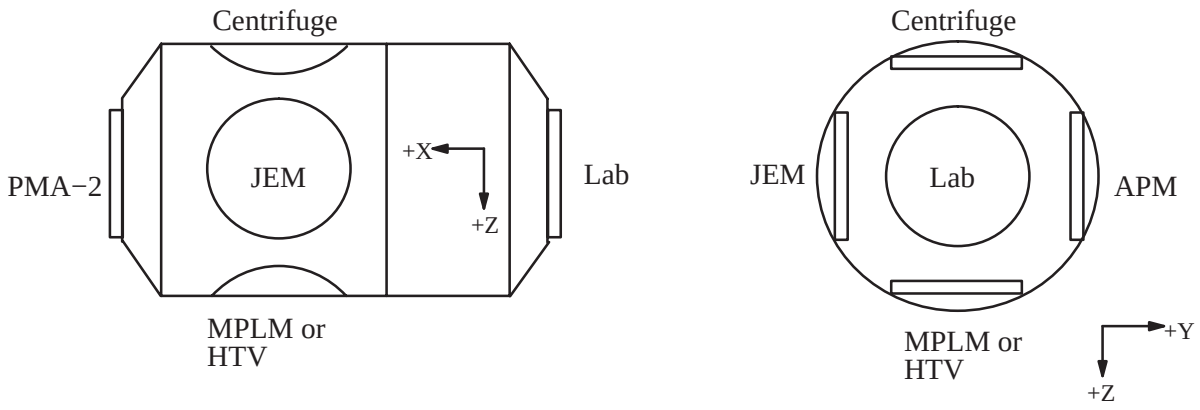

FIGURE 3.3.2.1.4−2 NODE 2 CBM CLOCKING

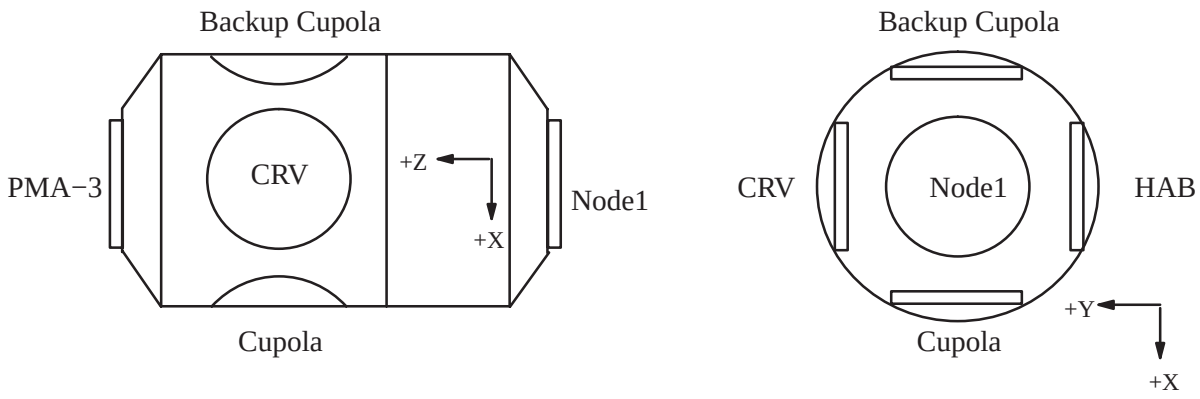

FIGURE 3.3.2.1.4−3 NODE 3 CBM CLOCKING

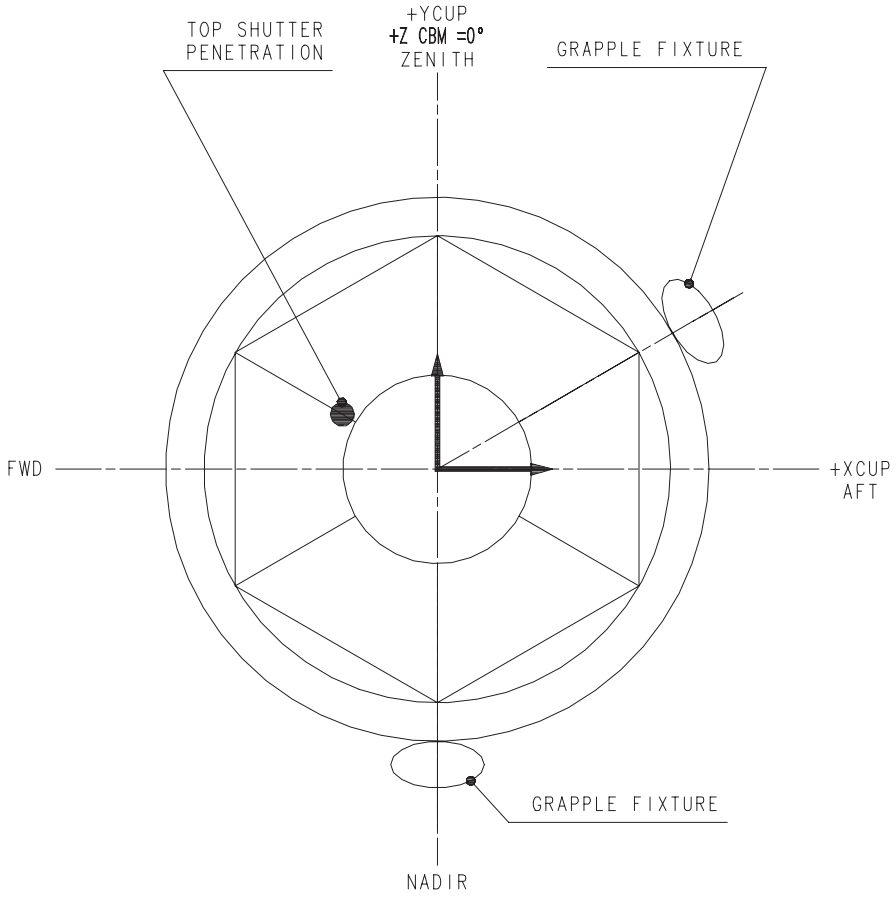

Looking at Cupola attached to port side berthing port on Node 1

Remarks:

a) Refers to Figures 3.3.2.1−1 and 3.3.2.1−4 for indexing Pin Locations.

b) “FWD, ZENITH, AFT and NADIR” references are to ISS On−orbit flight direction.

c) Grapple fixtures and Top Shutter penetration are added as Cupola unique orientation information only.

FIGURE 3.3.2.1.4−4 CUPOLA PCBM CLOCKING

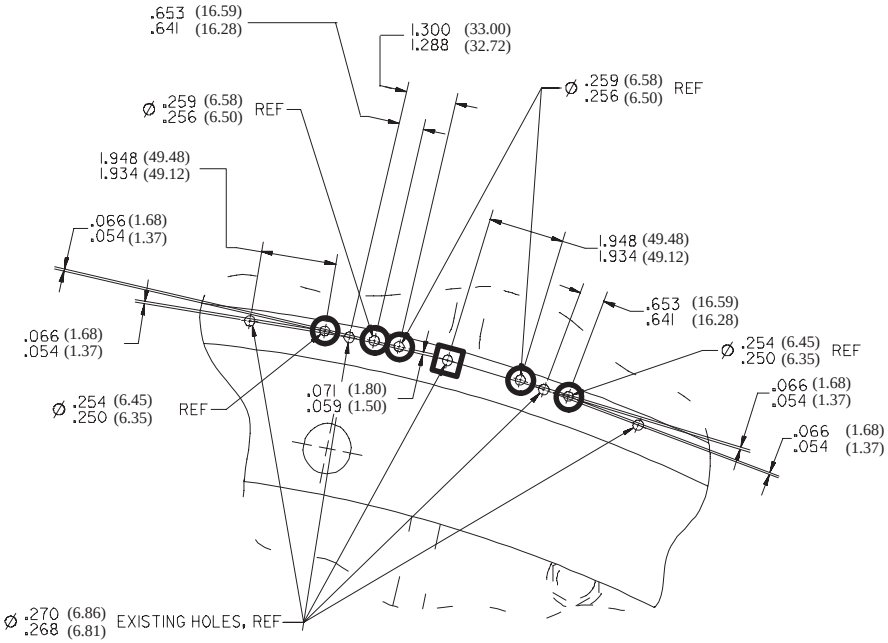

NOTES:

1) ☐ Designates hole #4
2) Typical (4 places), symmetrical about both axes.
3) Supplementary holes are located around holes 4, 44, 52, and 92 as shown in Figure 3.3.2.1−5.
4) ○ Designates five supplemental holes.

FIGURE 3.3.2.1.5−1 NODE 2 AND NODE 3 RADIAL PORT MATCH DRILLED HOLE LOCATION

3.3.3 THERMAL INTERFACES

3.3.3.1 CONDUCTIVE INTERFACES

3.3.3.1.1 INTERFACE DESCRIPTION

The pressurized element−to−CBM interface contact conductance is greater than 500 British Thermal Unit (Btu)/hr degrees Fahrenheit (264 Watt/degrees Celsius). The Active CBM motor controller−to−element interface contact conductance is greater than 47.2 Btu/hr degreesF (25 Watt/degrees Celsius) per motor controller.

3.3.3.2 THERMAL MATHEMATICAL MODELS

The ACBM/PCBM validated thermal mathematical model is delivered to the Prime. Prime will deliver model to other PGs and IPs controlled and documented in D683−85133. The model includes the ACBM/PCBM component/assembly geometries, optical properties, thermal capacitance, and conductance to complete an element level thermal analysis. The reduced PCBM to APM interface thermal mathematical model is defined in CLT−TN−AI−040, Reduced CBM and Hatch Interface Thermal Mathematical Model for APM Analysis.

3.3.4 ACTIVE CBM−TO−MODULE MOTOR CONTROLLER INTERFACES

3.3.4.1 ACTIVE CBM UNIQUE EPS BULKHEAD CONNECTORS

The Electrical Power System (EPS) bulkhead connectors for Active CBM control are described in Table 3.3.4.1−1. EPS Bulkhead Connector for Active CBM Control (Power) and Table 3.3.4.1−2, EPS Bulkhead Connector for Active CBM Control (Redundant Power).

3.3.4.2 MOTOR CONTROLLER CABLE INTERFACE

The Command and Data Handling (C&DH) bulkhead connectors for Active CBM control are described in Table 3.3.4.2−1, C&DH Bulkhead Connector for Active CBM Control (1553 Network A) and Table 3.3.4.2−2, C&DH Bulkhead Connector for Active CBM Control (1553 Network B).

3.3.4.3 MOTOR CONTROLLER MOUNTING PROVISIONS (ACTIVE CBM ONLY)

The Motor Controller mounts to the module bulkhead on the areas shown in Figure 3.3.4.3−1, Motor Controller Mounting Areas, and Figure 3.3.4.3−2, Motor Controller Mounting Areas (View A−A).

3.3.4.3.1 MOTOR CONTROLLER ATTACHMENT

Motor controllers are attached to the module bulkhead via bolts and inserts. Insert locations and surface preparations are shown in Figure 3.3.4.3.1−1, Motor Controller−to−Module Mounting Details, Figure 3.3.4.3.1−2, Motor Controller−to−Module Mounting Details (View A), and Figure 3.3.4.3.1−3, Motor Controller−to−Module Mounting Details (Section A−A).

TABLE 3.3.4.1−1 EPS BULKHEAD CONNECTOR FOR ACTIVE CBM CONTROL (POWER)

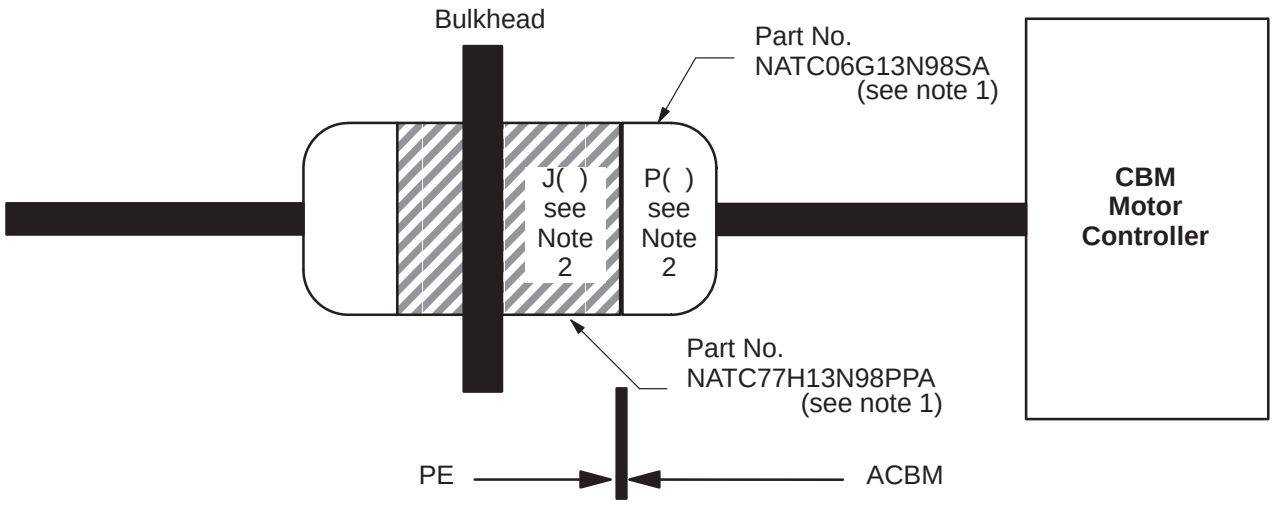

Note 1: Connector part numbers per SSQ 21635.

Note 2: Connector reference designators in ICD's listed in Figure 3.3.6−1.

PIN FUNCTION ASSIGNMENT

PIN ID	SIGNAL FUNCTION	(Note 3) VOLTAGE	CURRENT	EMC CLASS	PIN AWG	SPG LOCATION	NOTES
C	PRI CBM 1/4 PWR	111.5 TO 127.5	0.45 TO 1.25A	EO	20	PWR SRC	Twisted Pair
B	PRI CBM 1/4 PWR RTN	111.5 TO 127.5	0.45 TO 1.25A	EO	20	PWR SRC	
D	BACKUP CBM 1/4 PWR	111.5 TO 127.5	0.45 TO 1.25A	EO	20	PWR SRC	Twisted Pair
E	BACKUP CBM 1/4 PWR RTN	111.5 TO 127.5	0.45 TO 1.25A	EO	20	PWR SRC	
H	SLAVE 1 CBM 1/4 PWR	111.5 TO 127.5	0.45 TO 1.25A	EO	20	PWR SRC	Twisted Pair
G	SLAVE 1 CBM 1/4 PWR RTN	111.5 TO 127.5	0.45 TO 1.25A	EO	20	PWR SRC	
K	SLAVE 2 CBM 1/4 PWR	111.5 TO 127.5	0.45 TO 1.25A	EO	20	PWR SRC	Twisted Pair
J	SLAVE 2 CBM 1/4 PWR RTN	111.5 TO 127.5	0.45 TO 1.25A	EO	20	PWR SRC	
A	SPARE						
F	SPARE						

Note 3 : This does not include ripple voltage.

PIN ID	SIGNAL FUNCTION
C	MA−1 PWR 1
B	MA−1 PWR 1 RTN
D	MA−2 PWR 1
E	MA−2 PWR 1 RTN
H	SL−1 PWR 1
G	SL−1 PWR 1 RTN
K	SL−2 PWR 1
J	SL−2 PWR 1 RTN
A	SPARE
F	SPARE

Note 4: For Node 2 only: Each Active Port

TABLE 3.3.4.1−2 EPS BULKHEAD CONNECTOR FOR ACTIVE CBM CONTROL (REDUNDANT POWER)

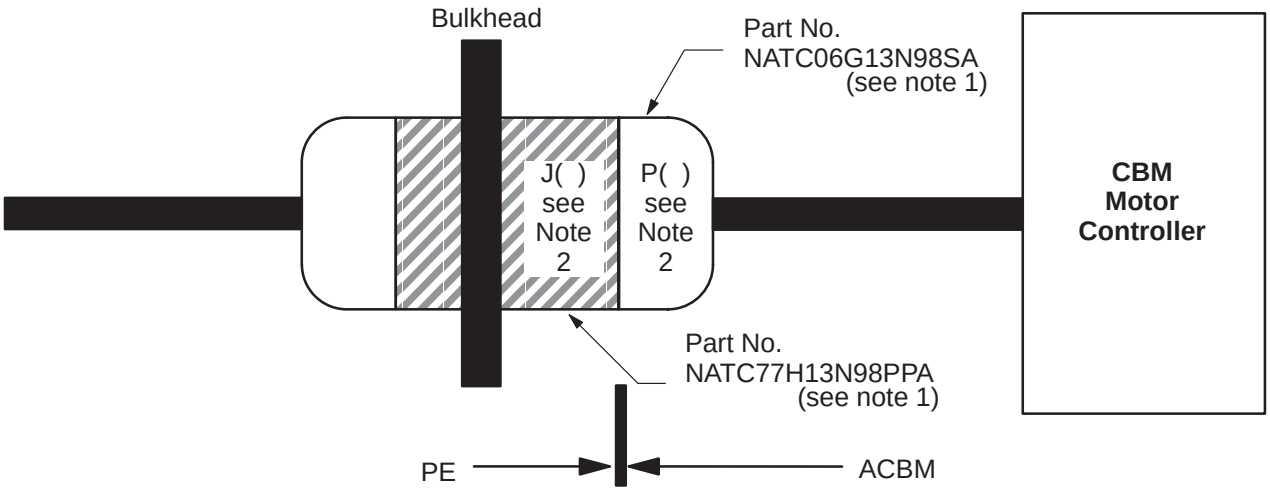

Note 1: Connector part numbers per SSQ 21635.

Note 2: Connector reference designators in ICD's listed in Figure 3.3.6−1.

PIN FUNCTION ASSIGNMENT

PIN ID	SIGNAL FUNCTION	(Note 3) VOLTAGE	CURRENT	EMC CLASS	PIN AWG	SPG LOCATION	NOTES
C	PRI CBM 2/3 PWR	111.5 TO 127.5	0.45 TO 1.25A	EO	20	PWR SRC	Twisted
B	PRI CBM 2/3 PWR RTN	111.5 TO 127.5	0.45 TO 1.25A	EO	20	PWR SRC	Pair
D	BACKUP CBM 2/3 PWR	111.5 TO 127.5	0.45 TO 1.25A	EO	20	PWR SRC	Twisted
E	BACKUP CBM 2/3 PWR RTN	111.5 TO 127.5	0.45 TO 1.25A	EO	20	PWR SRC	Pair
H	SLAVE 1 CBM 2/3 PWR	111.5 TO 127.5	0.45 TO 1.25A	EO	20	PWR SRC	Twisted
G	SLAVE 1 CBM 2/3 PWR RTN	111.5 TO 127.5	0.45 TO 1.25A	EO	20	PWR SRC	Pair
K	SLAVE 2 CBM 2/3 PWR	111.5 TO 127.5	0.45 TO 1.25A	EO	20	PWR SRC	Twisted
J	SLAVE 2 CBM 2/3 PWR RTN	111.5 TO 127.5	0.45 TO 1.25A	EO	20	PWR SRC	Pair
A	SPARE						
F	SPARE						

Note 3: This does not include ripple voltage.

PIN ID	SIGNAL FUNCTION
C	MA−1 PWR 2
B	MA−1 PWR 2 RTN
D	MA−2 PWR 2
E	MA−2 PWR 2 RTN
H	SL−1 PWR 2
G	SL−1 PWR 2 RTN
K	SL−2 PWR 2
J	SL−2 PWR 2 RTN
A	SPARE
F	SPARE
Note 4: For Node 2 only: Each Active Port	

TABLE 3.3.4.2−1 C&DH BULKHEAD CONNECTOR FOR ACTIVE CBM CONTROL (1553 NETWORK A)

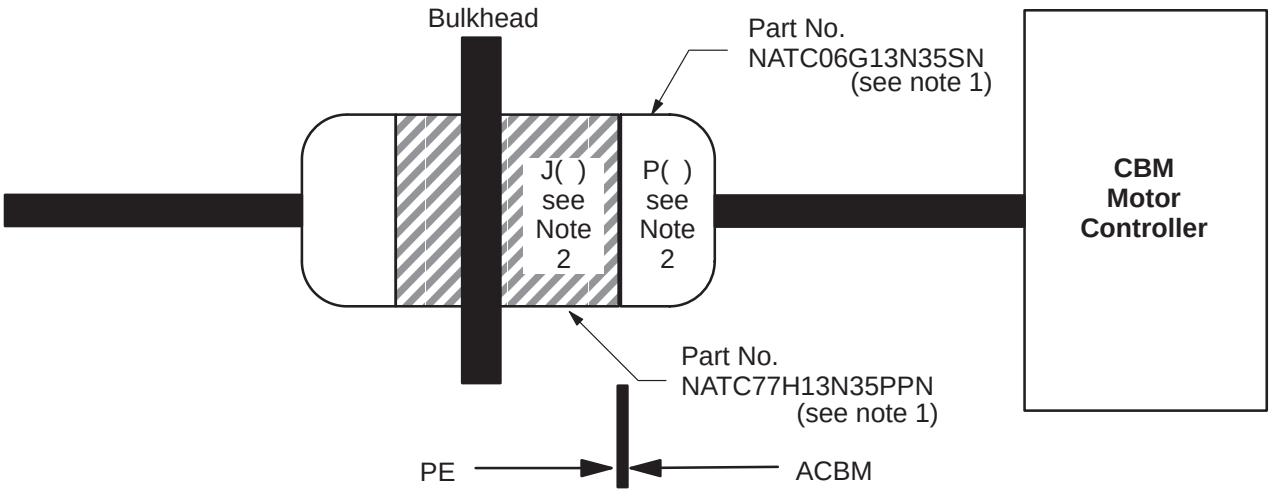

Note 1: Connector part numbers per SSQ 21635.

Note 2: Connector reference designators in ICD's listed in Figure 3.3.6−1.

PIN FUNCTION ASSIGNMENT

	PIN ID	SIGNAL FUNCTION (Note 3)	EMC CLASS	PIN AWG	NOTES	
	19	1553B BUS−1A STUB HI	RF	22		
	20	1553B BUS−1A STUB LO	RF	22	1553 BUS A, TSP	
	21	1553B BUS−2A STUB HI	RF	22		
	22	1553B BUS−2A STUB LO	RF	22	1553 BUS A, TSP	
	1−18	SPARES				

Note 3 : For JEM only.

PIN ID	SIGNAL FUNCTION
19	1553B CB−EXT−1A HI
20	1553B CB−EXT−1A LO
21	1553B CB−EXT−2A HI
22	1553B CB−EXT−2A LO

Note 4 : For Node 2 only: Each Active Port

PIN ID	SIGNAL FUNCTION
19	1553B LB SYS−N2−1 1AHI
20	1553B LB SYS−N2−1 1ALO
21	1553B LB SYS−N2−2 2AHI
22	1553B LB SYS−N2−2 2ALO

TABLE 3.3.4.2−2 C&DH BULKHEAD CONNECTOR FOR ACTIVE CBM CONTROL (1553 NETWORK B)

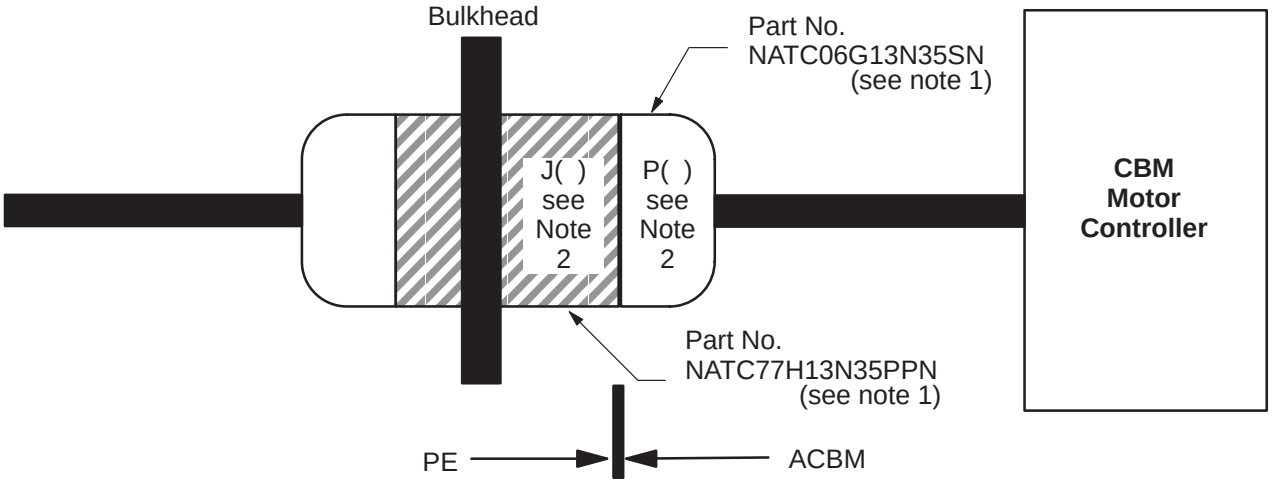

Note 1: Connector part numbers per SSQ 21635.

Note 2: Connector reference designators in ICD's listed in Figure 3.3.6−1.

PIN FUNCTION ASSIGNMENT

	PIN ID	SIGNAL FUNCTION (Note 3)	EMC CLASS	PIN AWG	NOTES	
	19	1553B BUS−1B STUB HI	RF	22		
	20	1553B BUS−1B STUB LO	RF	22	1553 BUS B, TSP	
	21	1553B BUS−2B STUB HI	RF	22		
	22	1553B BUS−2B STUB LQ	RF	22	1553 BUS B, TSP	
	1−18	SPARES				

Note 3 : For JEM only.

PIN ID	SIGNAL FUNCTION
19	1553B CB−EXT−2A HI
20	1553B CB−EXT−2A LO
21	1553B CB−EXT−2B HI
22	1553B CB−EXT−2B LO

Note 4 : For Node 2 only: Each Active Port

PIN ID	SIGNAL FUNCTION
19	1553B LB SYS−N2−1 1BHI
20	1553B LB SYS−N2−1 1BLO
21	1553B LB SYS−N2−2 2BHI
22	1553B LB SYS−N2−2 2BLO

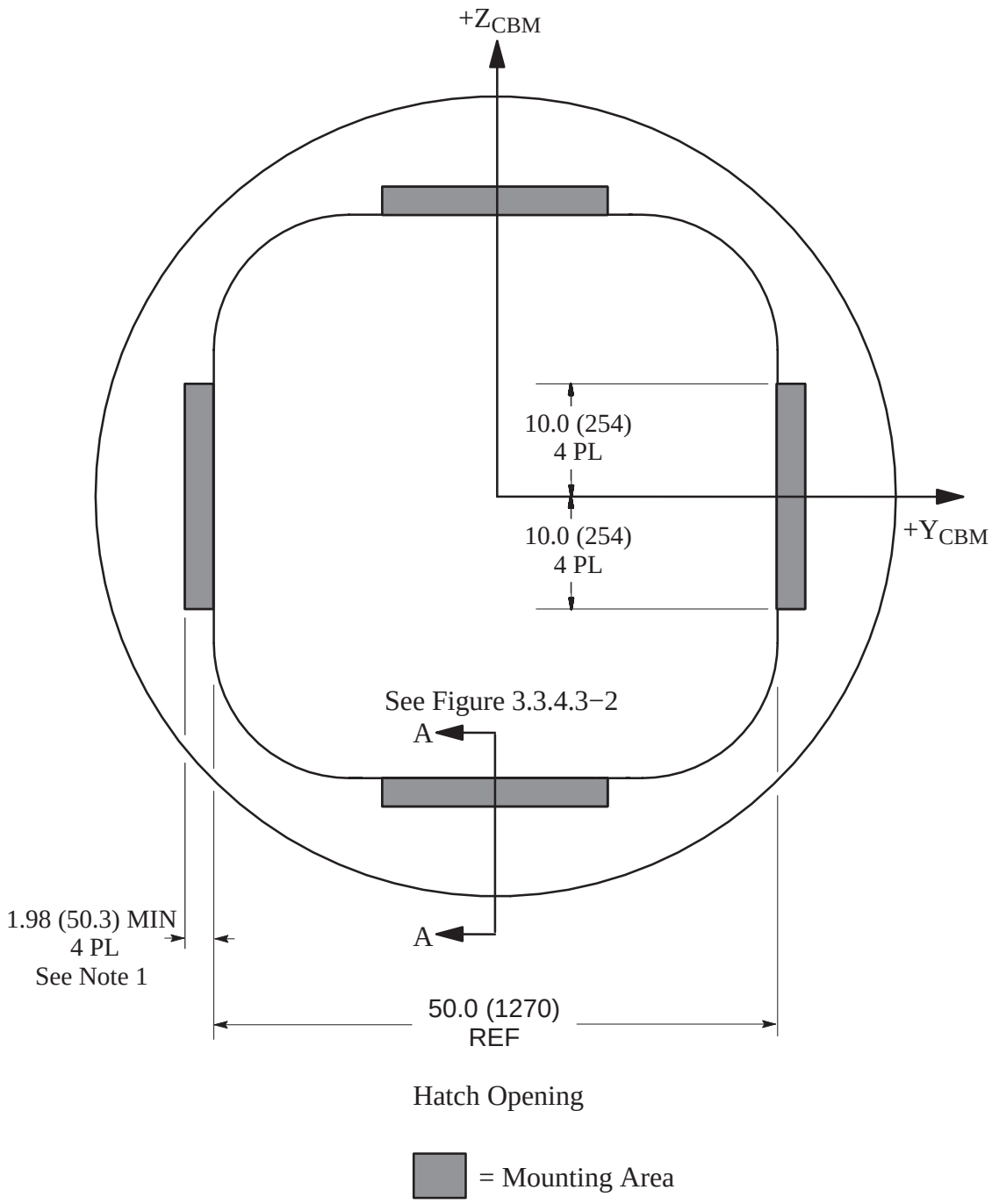

Note: 1) Structural mounting area inclusive of corner radii.

FIGURE 3.3.4.3−1 MOTOR CONTROLLER MOUNTING AREAS

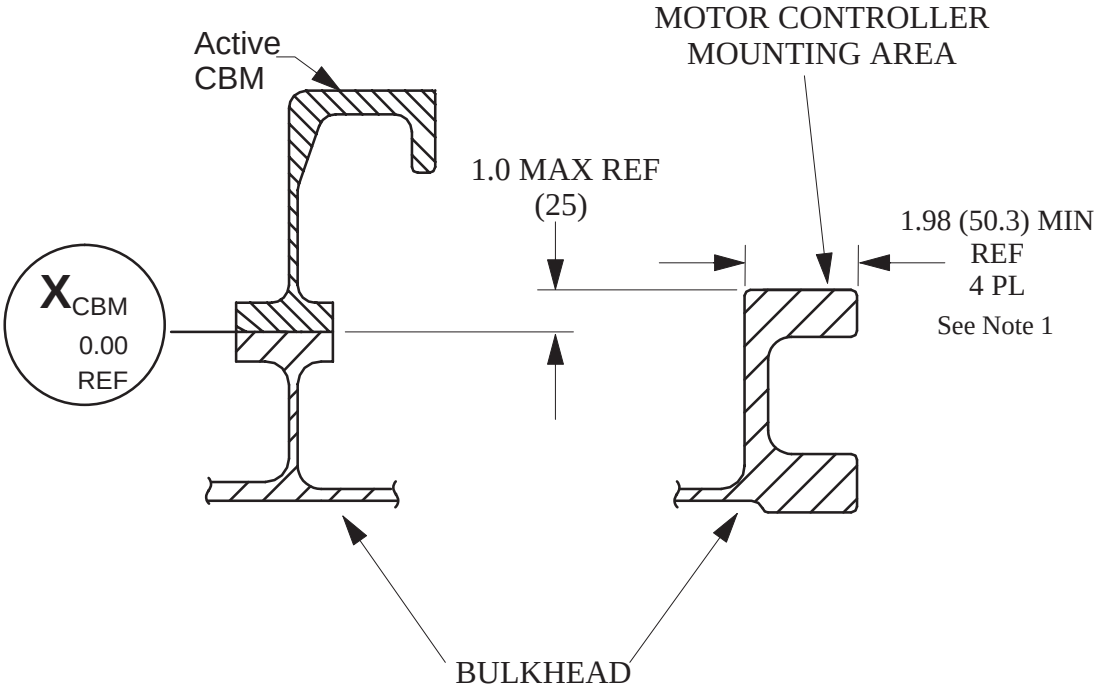

View A−A Rotated 90 degrees Clockwise

Note: 1) Structural mounting area inclusive of corner radii.

FIGURE 3.3.4.3−2 MOTOR CONTROLLER MOUNTING AREAS (VIEW A−A)

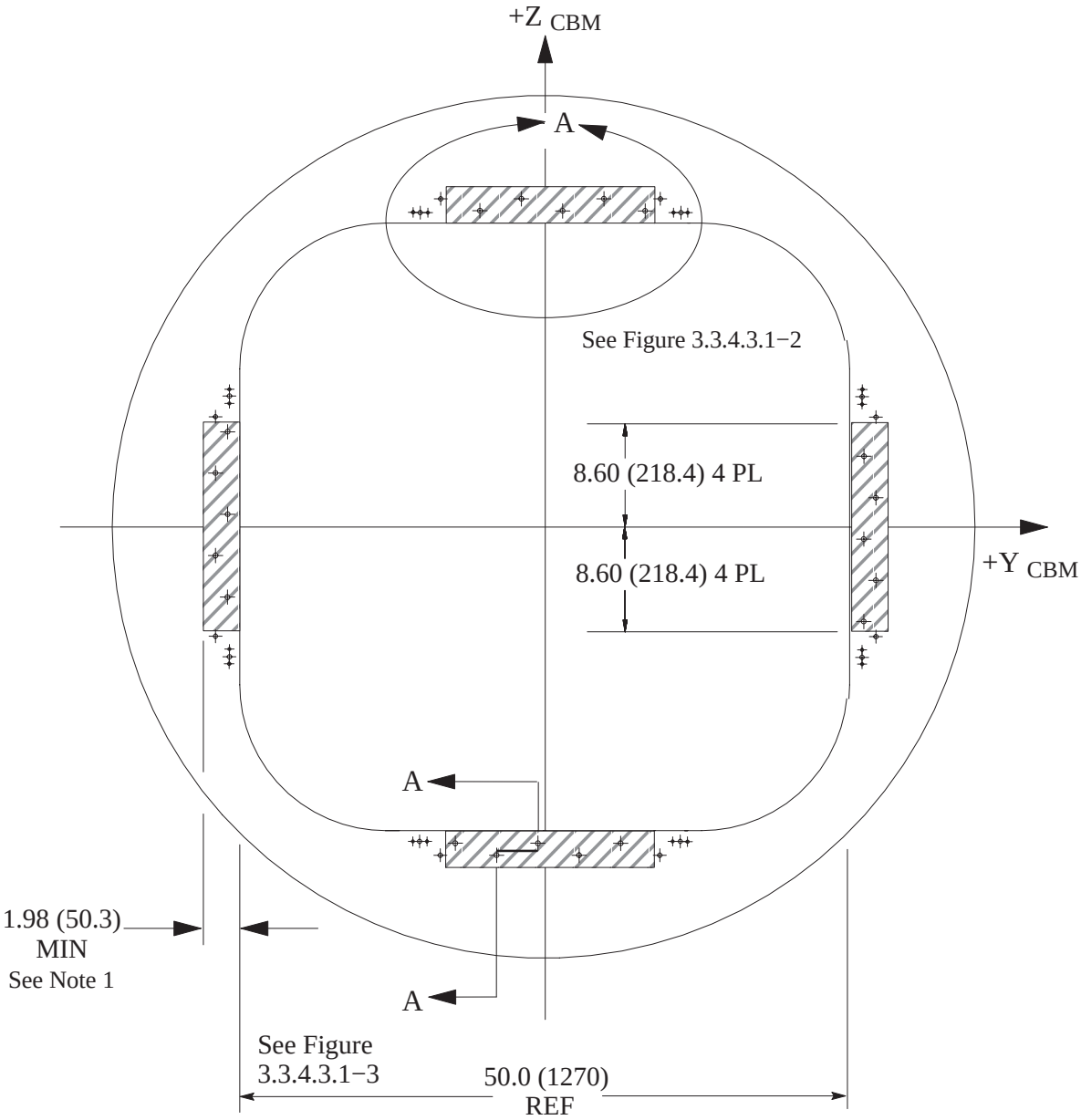

Hatch Opening

Nickel plate per MIL-STD-865, .0005 to .001 thick.
64µin (16µmm) surface finish applies after plating.

Note: 1) Structural mounting area inclusive of corner radii.

FIGURE 3.3.4.3.1−1 MOTOR CONTROLLER−TO−MODULE MOUNTING DETAILS

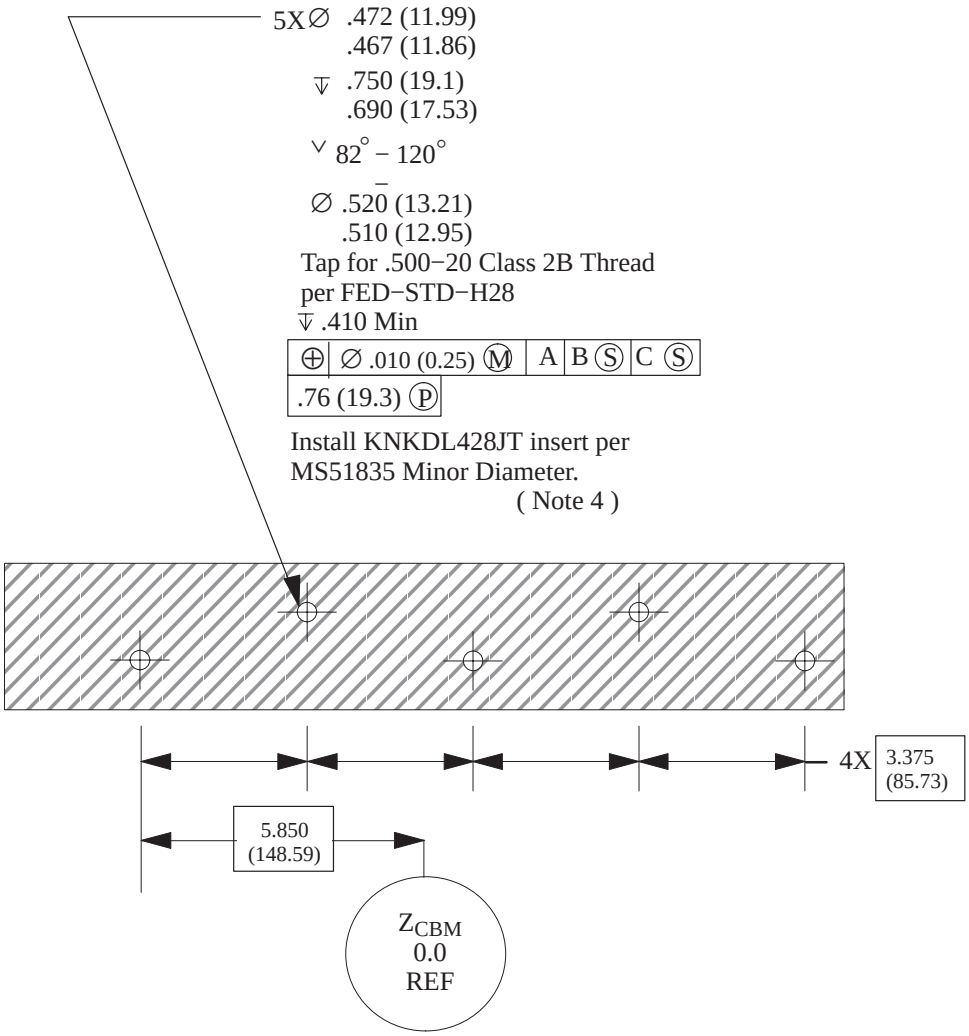

View A
4 Places

1) The −A− datum is defined as the $X_{CBM} = 0$ plane.
2) The −B− datum is defined as ∅ 79.700 (2024.38).
3) The −C− datum is defined as $\theta_{CBM} = 1.875°$ on ∅ 79.094 (2008.99).
4) Insert: Floating Insert, A286 CRES per AMS5737.
Passivated per QQ−P−35. Dry film lubricated per MIL−L−46010, Type I.
P/N KNKDL428JT: Fairchild Corp. Tridair Aerospace Fastener Div. (Cage Code : 29372).

FIGURE 3.3.4.3.1−2 MOTOR CONTROLLER−TO−MODULE MOUNTING DETAILS (RADIAL PORTS) (VIEW A)

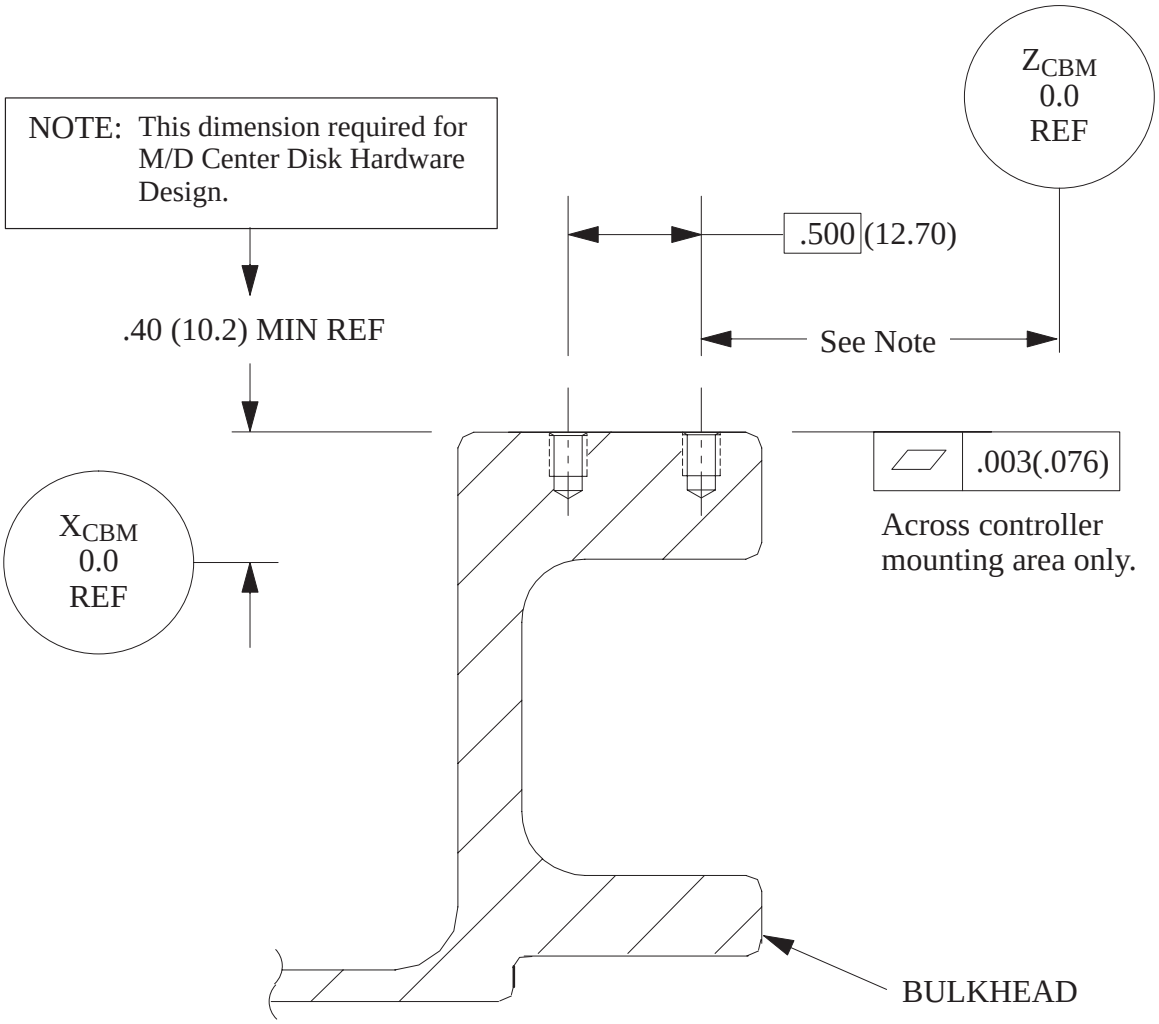

NOTE: Dimension varies as follows:
Node radial port: 26.250 (666.75)
Axial port: 25.850 (656.59)
JEM radial port: 25.850 (656.59)

FIGURE 3.3.4.3.1−3 MOTOR CONTROLLER−TO−MODULE MOUNTING DETAILS (SECTION A−A)

3.3.5 LEAK CHECK INTERFACES

3.3.5.1 LEAK CHECK PORT DESIGN

The location of the Leak Check Ports for the CBM−PE Interface are shown on Figure 3.3.5.1−1, CBM Leak Check Port Location. The Leak Check Port Design Detail is shown on Figure 3.3.5.1−2, ACBM Leak Check Port Detail, and Figure 3.3.5.1−3, PCBM Leak Check Port Detail.

3.3.5.2 ATMOSPHERIC CONTAINMENT

The ACBM to PE interface leakage rate is as shown in paragraph 3A.2.1.3.4 of SSP 41004, Part 1. The PCBM to PE interface leakage rate is as shown in paragraph 3B.2.1.3.4 of SSP 41004, Part 1.

3.3.6 ACTIVE CBM−TO−MODULE BULKHEAD FEEDTHRU INTERFACES

Feedthru locations for CBM functions are shown in Figure 3.3.6−1, CBM Feedthru Locations (Active CBM only) and Figure 3.3.6−2, CBM Feedthru Locations (JEM−PM Active CBM only). The ACBM Feedthru connector reference designators are shown in the Element−to−Element ICDs listed in Figure 3.3.6−1 and Figure 3.3.6−2.

3.3.7 GROUND HANDLING INTERFACES

3.3.7.1 HANDLING AND LIFT POINT LOCATIONS

The locations for ground handling and assembly of the CBM Structural Ring to the PE are shown in Figure 3.3.7.1−1, Handling and Lift Point Locations for Active and Passive CBM Structural Rings and a typical handling/lift point hole in Figure 3.3.7.1−2, Typical Handling/Lift Point Hole.

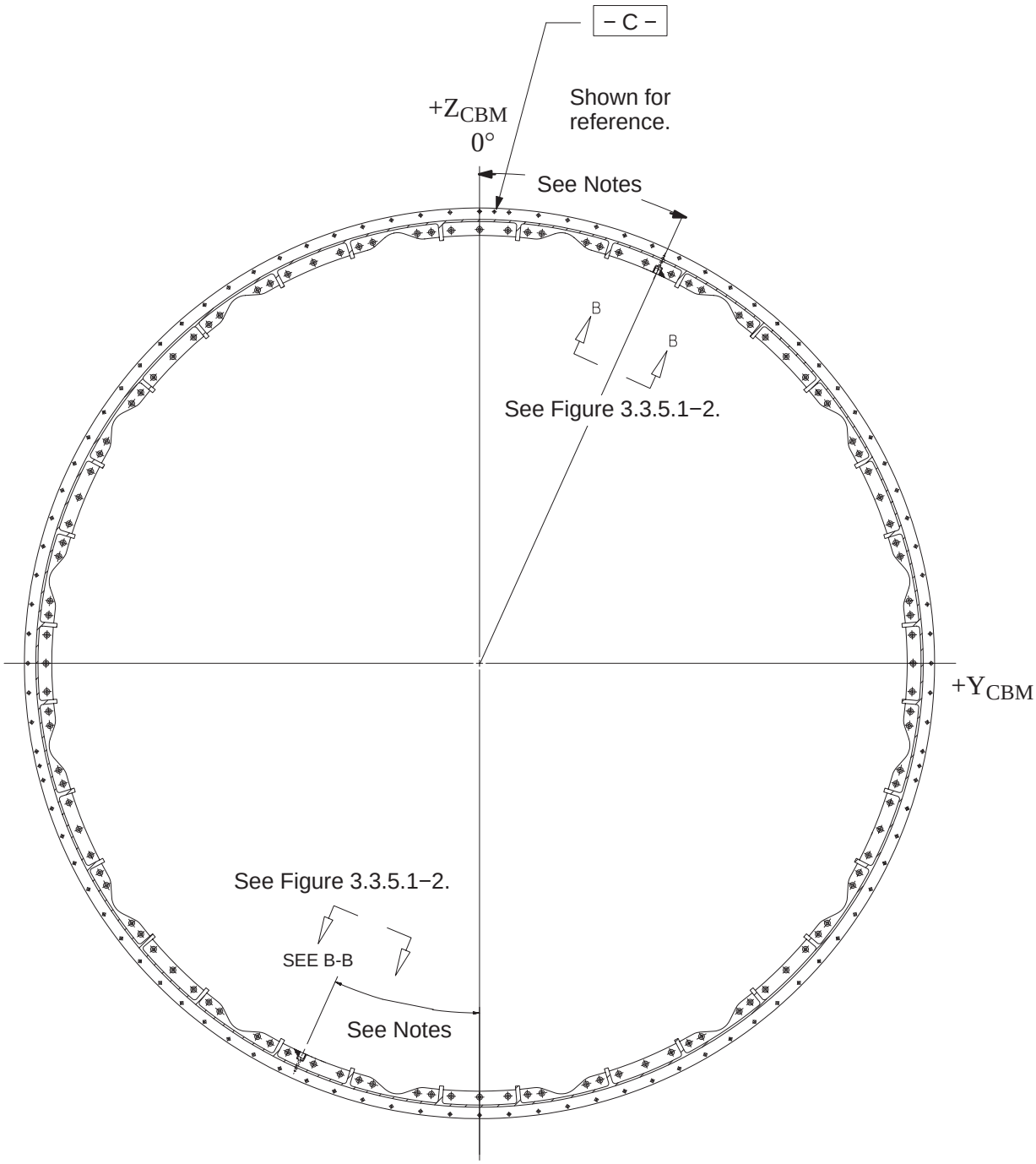

View in the $+X_{CBM}$ direction

Note: 1) A_{CBM} ring = 24.38°
2) P_{CBM} ring = 23.825°
3) ACBM ring shown as reference

FIGURE 3.3.5.1−1 CBM LEAK CHECK PORT LOCATION

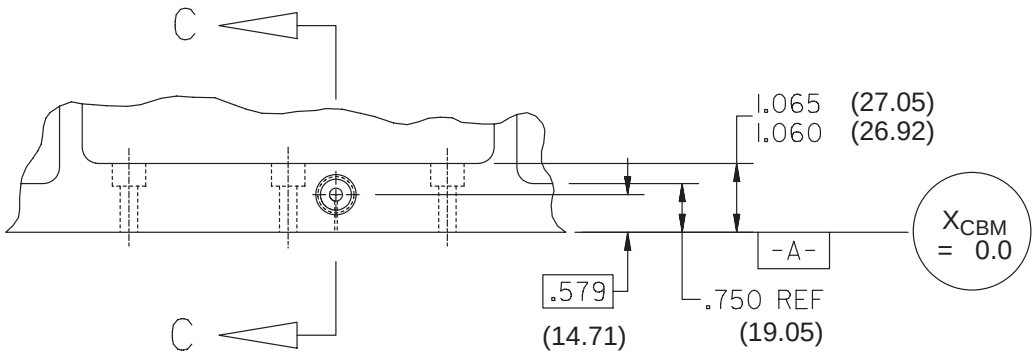

See below for ACBM
See Figure 3.3.5.1−3 for PCBM

VIEW B-B
ROTATED 24.38° CCW
SCALE: 1/2

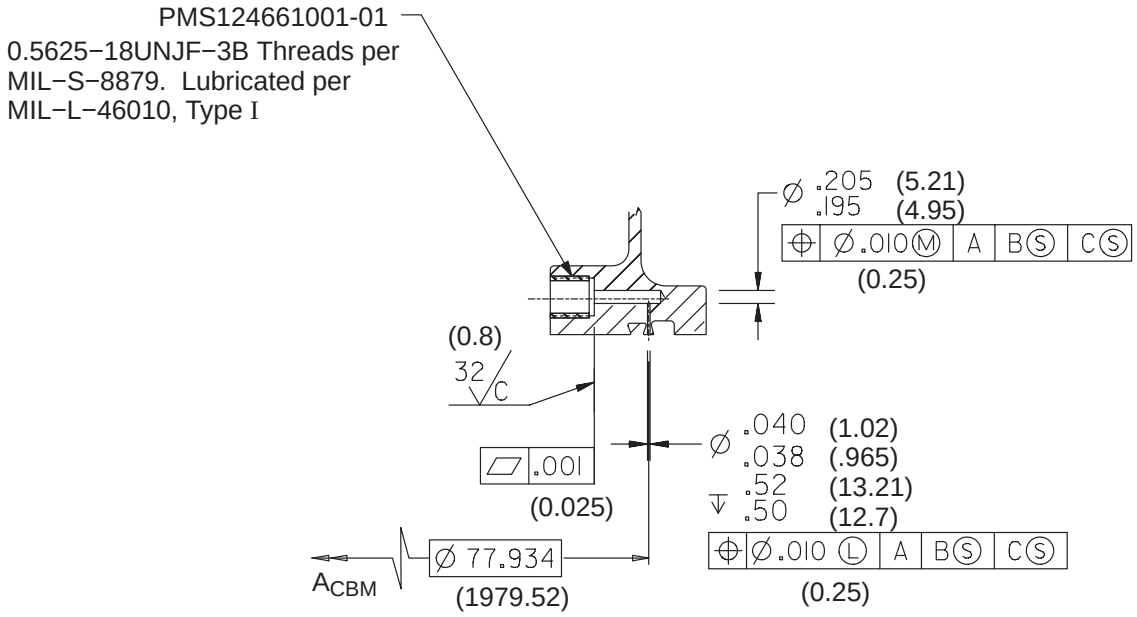

SECTION C-C
SCALE: 1/2

FIGURE 3.3.5.1−2 CBM LEAK CHECK PORT DETAIL

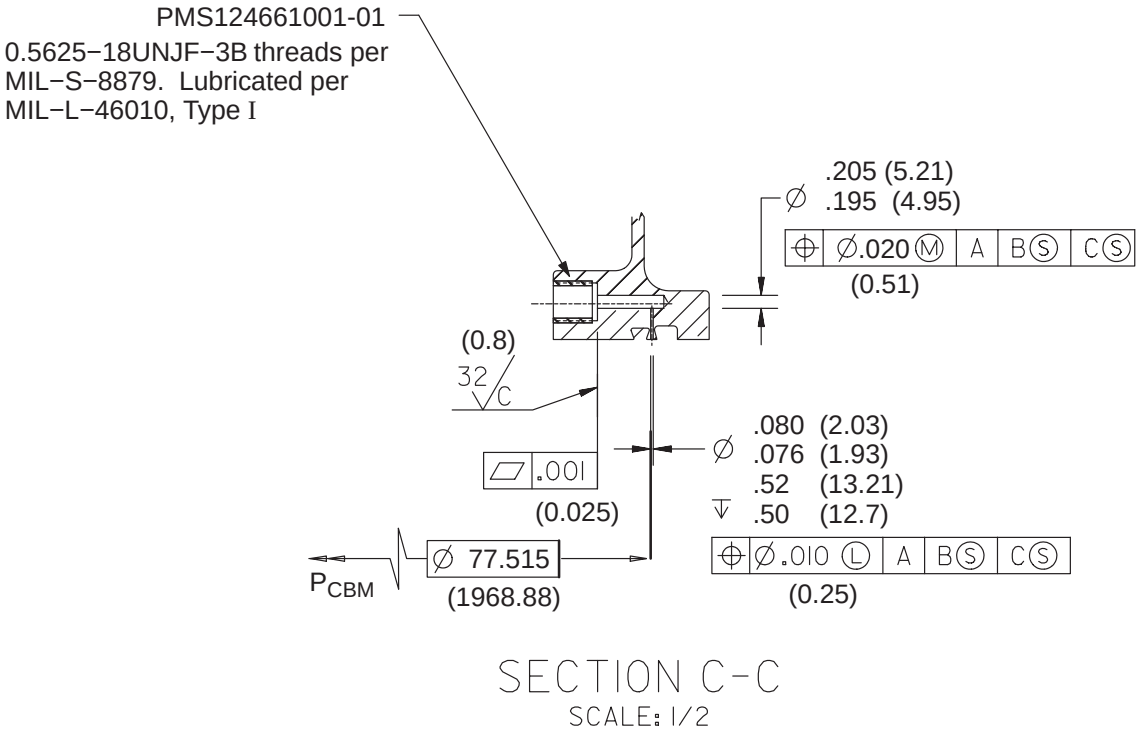

FIGURE 3.3.5.1−3 PCBM LEAK CHECK PORT DETAIL

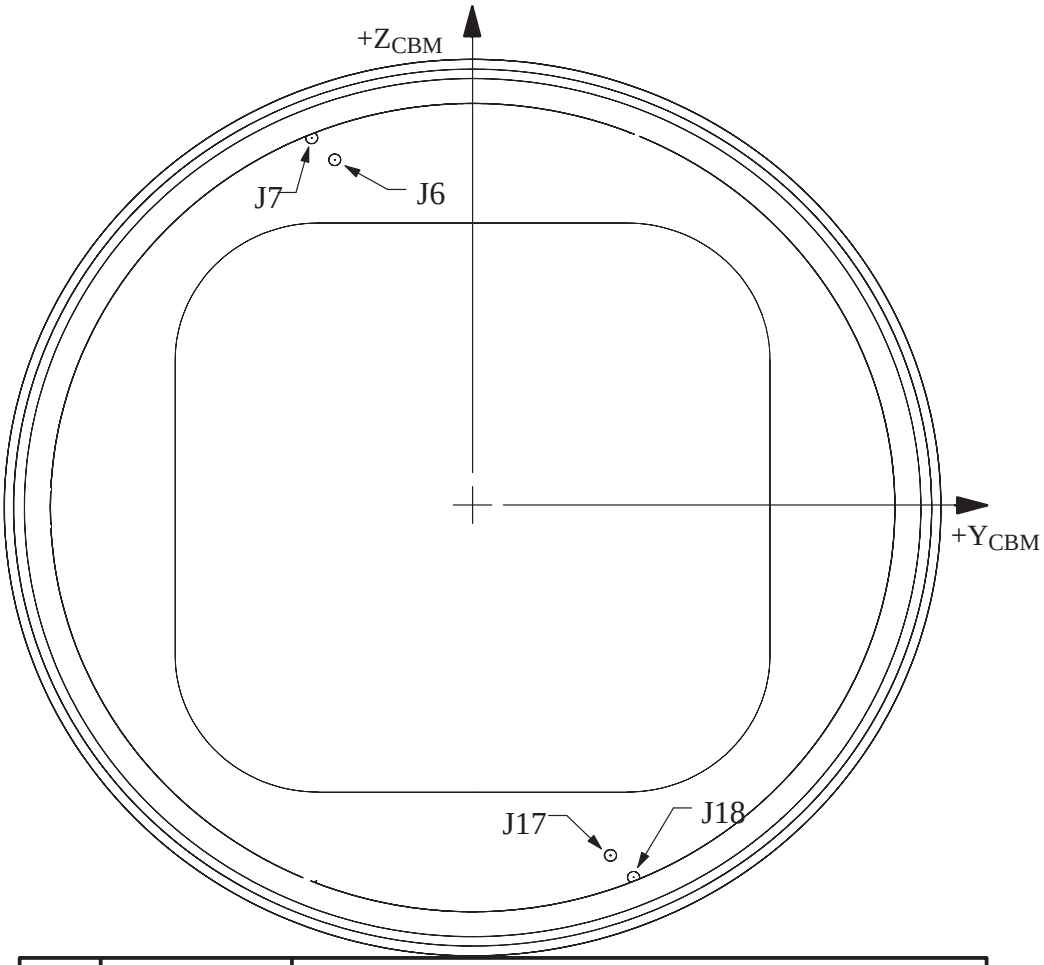

HOLE REF	HOLE LOC (CBM Coord.) Z	Y	FUNCTION
J6	30.66	−11.60	1553 CBM BUS A
J7	32.58	−13.54	Power
J17	−30.66	11.60	1553 CBM BUS B
J18	−32.58	13.54	Redundant Power

NOTE: View looking in the $-X_{CBM}$ direction at the module bulkhead (US Lab Forward Port shown).

NOTE: For ACBM connector reference designators and bulkhead feedthru details (location, size, etc.), see the following Element−to−Element ICDs:

SSP 41140	Node Element 1 to U.S. Habitation Element ICD, Part 2
SSP 41142	Node Elements to Cupola Element ICD, Part 2
SSP 41143	Node 2 to U.S. Laboratory Element ICD, Part 2
SSP 41145	Node 1 to Airlock Element ICD, Part 2
SSP 42001	USOS to APM ICD
SSP 42007	U.S. On-Orbit Segment to Italian MPLM ICD, Part 2
SSP 42097	PMA to U.S. Pressurized Elements ICD
SSP 44030	Z1 to Node 1 ICD, Part 2

FIGURE 3.3.6−1 CBM FEEDTHRU LOCATIONS (ACTIVE CBM ONLY)

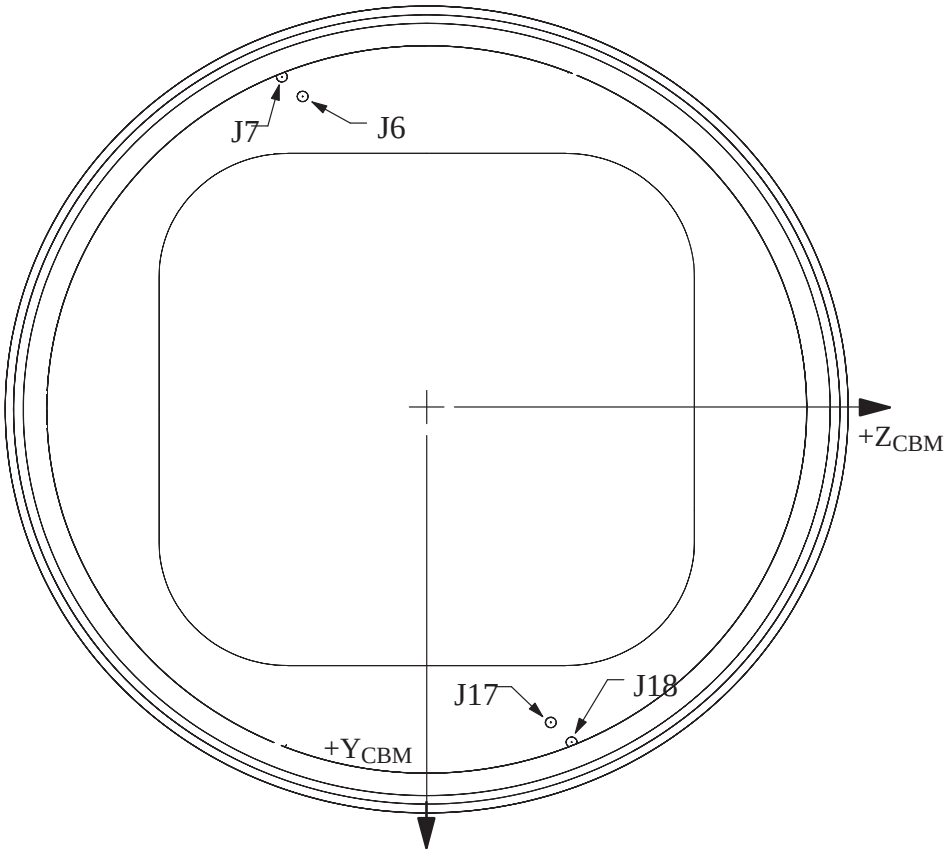

HOLE REF	HOLE LOC (CBM Coord.) Z	Y	FUNCTION
J6	−11.60	−30.66	1553B CB EXT−1A and 1553B CB EXT−2A
J7	−13.54	−32.58	Power
J17	11.60	30.66	1553B CB EXT−1B and 1553B CB EXT−2B
J18	13.54	32.58	Redundant Power

NOTE: View looking in the $-X_{CBM}$ direction at the module bulkhead (JEM Radial Port shown).

FIGURE 3.3.6−2 CBM FEEDTHRU LOCATIONS (JEM−PM ACTIVE CBM ONLY)

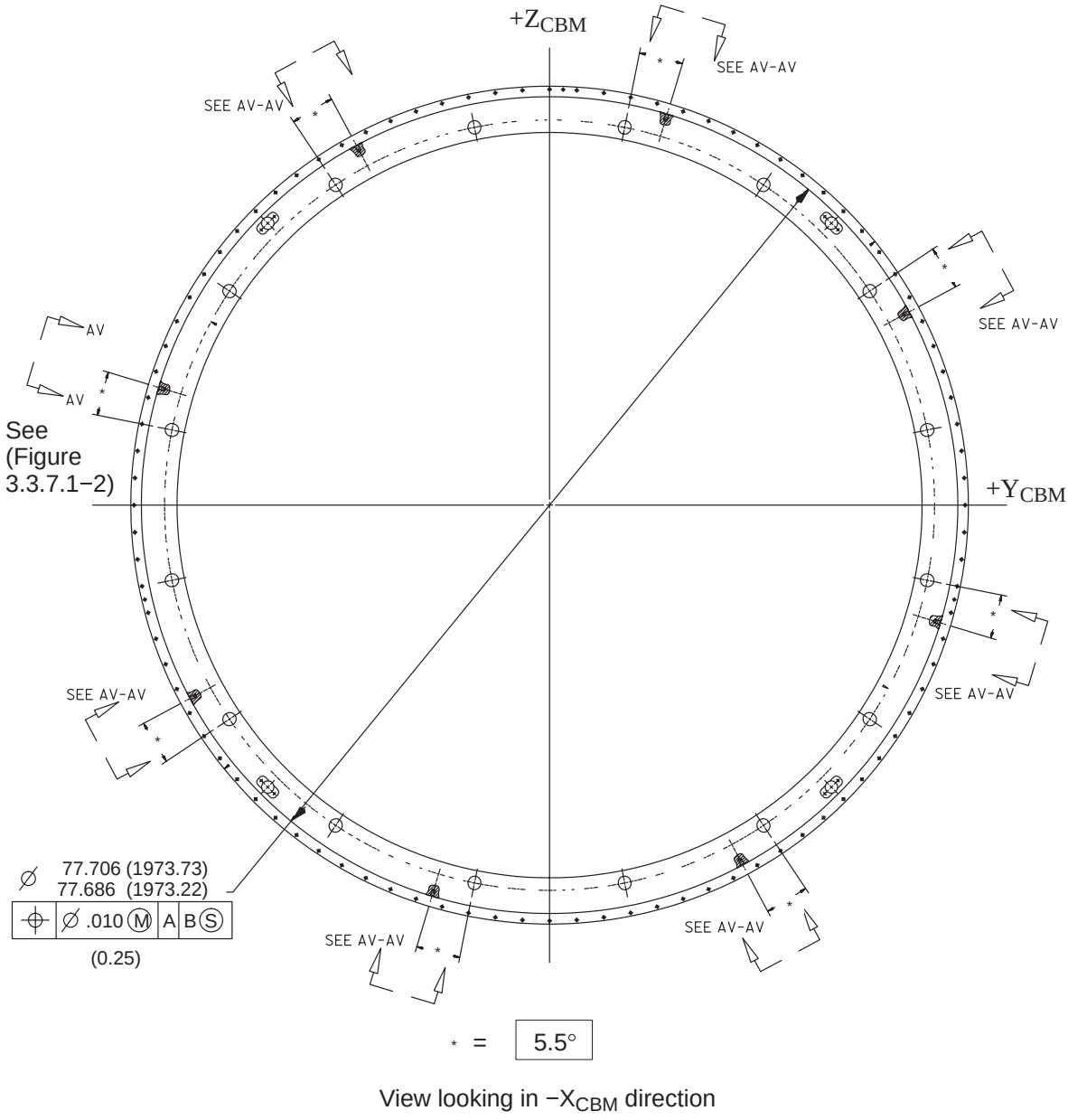

View looking in $-X_{CBM}$ direction

FIGURE 3.3.7.1−1 HANDLING AND LIFT POINT LOCATIONS FOR ACBM AND PCBM STRUCTURAL RINGS

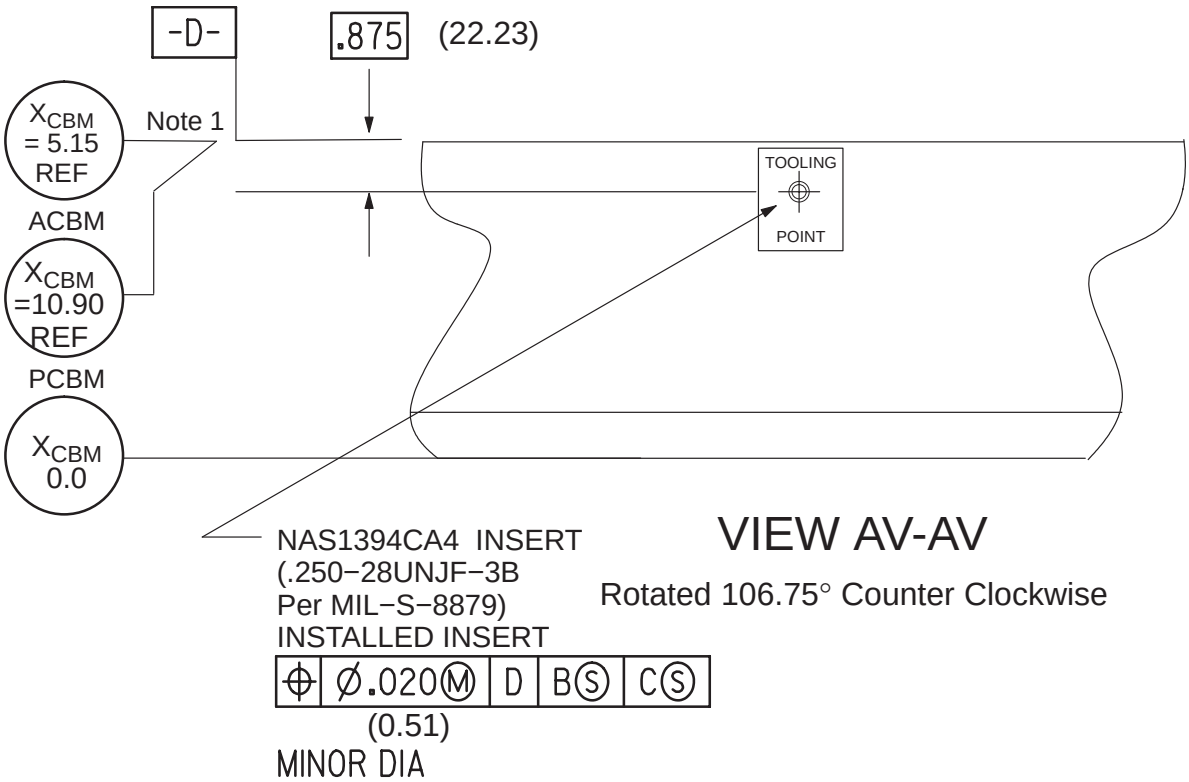

Note: 1) CBM−to−CBM installed interface reference point is 5.15 (130.81) from the X_{CBM}=0.0 position for the ACBM and 11.15 (283.21) for the PCBM.

2) Tooling points can be used as attach points and grounding locations for external passive thermal control hardware (except for Node radial ports and those used by M/D skirts shown in Figure 3.3.10−8 and bumpers shown in Figure 3.3.10−4. These locations are chemical conversion coated per MIL−C−5541, Class III.

3) Planes B and C are defined in Figures 3.3.2.1−1 and 3.3.2.1−2.

FIGURE 3.3.7.1−2 TYPICAL HANDLING/LIFT POINT HOLE

3.3.8 VESTIBULE CLOSEOUT PANEL INTERFACES

Closeout of the vestibules created between berthed modules is accomplished utilizing beta cloth closeout panels affixed to the bulkhead hatch beams or similar attach points on the berthed modules. These panels are affixed to brackets on the bulkhead hatch beams or similar attach points using quarterturn fasteners (part of the panels).

The various cases of vestibule closeout interfaces are called out below:

−United States On−orbit Segment (USOS) Axial Bulkhead to USOS Axial Bulkhead
−Node 1 Radial Bulkhead to USOS Axial Bulkhead
−Node 1 Radial Bulkhead to PMA
−Node 1 and USOS Axial Bulkhead to PMA
−Node 1 Radial Bulkhead to MPLM Axial Bulkhead
−Node 2 Radial Bulkhead to APM, MPLM, JEM, JEM−ELM, and Centrifuge Accomodation Module (CAM)
−Node 2 Axial bulkhead to LAB and PMA
−Node 3 Radial bulkhead to CRV, HAB, MPLM, and CUPOLA
−Node 3 Axial bulkhead to NODE 1 and PMA

Vestibule closeout panel to Node 1 radial bulkhead interfaces are defined in Figure 3.3.8−1, Closeout Panel to Node 1 Radial Bulkhead Interface. Vestibule closeout panel to Node 1, US Lab, and Airlock axial bulkhead interfaces are defined in Figure 3.3.8−2, Closeout Panel to Node 1, Lab and Airlock Axial Bulkhead Interface. Vestibule closeout panel to the APM, MPLM, Node 2, and Node 3 axial bulkhead (Passive CBM side) interfaces are defined in Figure 3.3.8−3, Closeout Panel to APM, MPLM, Node 2 and Node 3 PCBM Interface. Vestibule closeout panel to the PMA interfaces are defined in Figure 3.3.8−4, Closeout Panel to PMA Interface. Vestibule closeout panel to the JEM PM and JEM ELM PS axial bulkhead interfaces are defined in Figure 3.3.8−5, Closeout Panel to JEM PM and JEM ELM PS Axial Bulkhead Interface. Vestibule closeout panel to the Node 2 and Node 3 radial bulkhead interfaces are defined in Figure 3.3.8−6, Closeout Panel to Node 2 & 3 Radial Bulkhead Interface. Vestibule closeout panel to the NODE 2 and NODE 3 axial bulkhead (ACBM side) interface are defined in Figure 3.3.8−7, Closeout Panel to Node 2 and Node 3 ACBM Axial Bulkhead Interface.

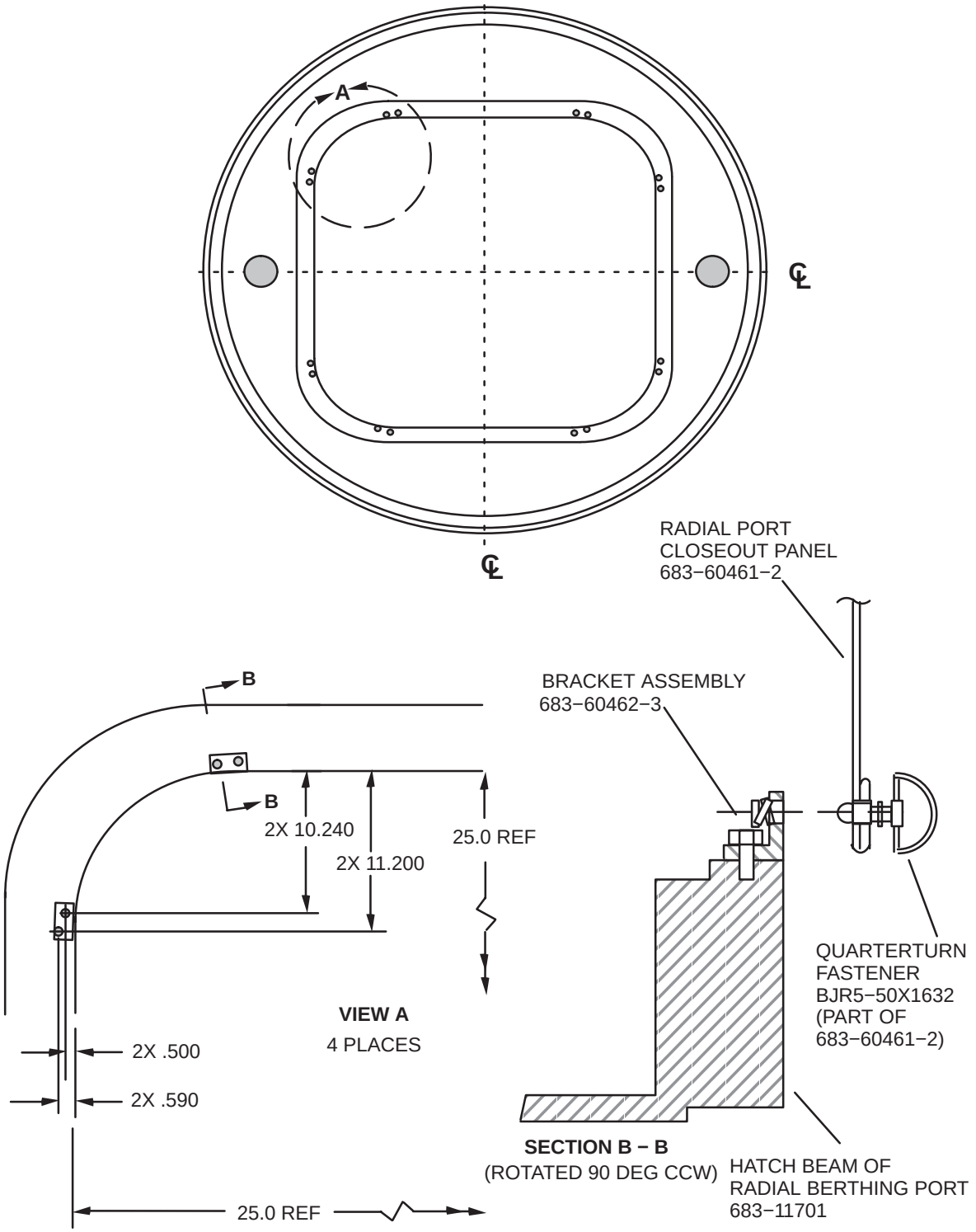

FIGURE 3.3.8−1 CLOSEOUT PANEL TO NODE 1 RADIAL BULKHEAD INTERFACE

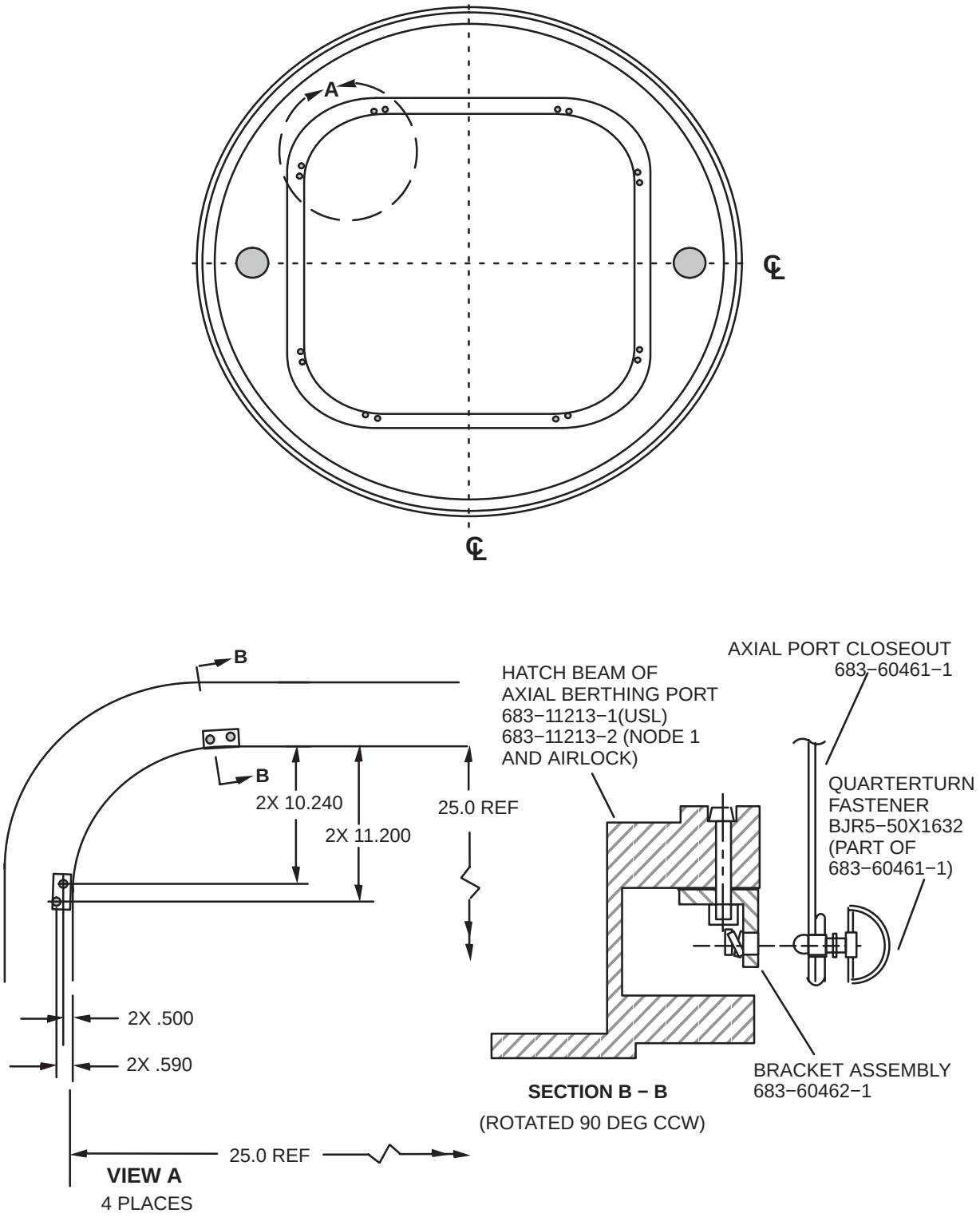

FIGURE 3.3.8−2 CLOSEOUT PANEL TO NODE 1, LAB AND AIRLOCK AXIAL BULKHEAD INTERFACE

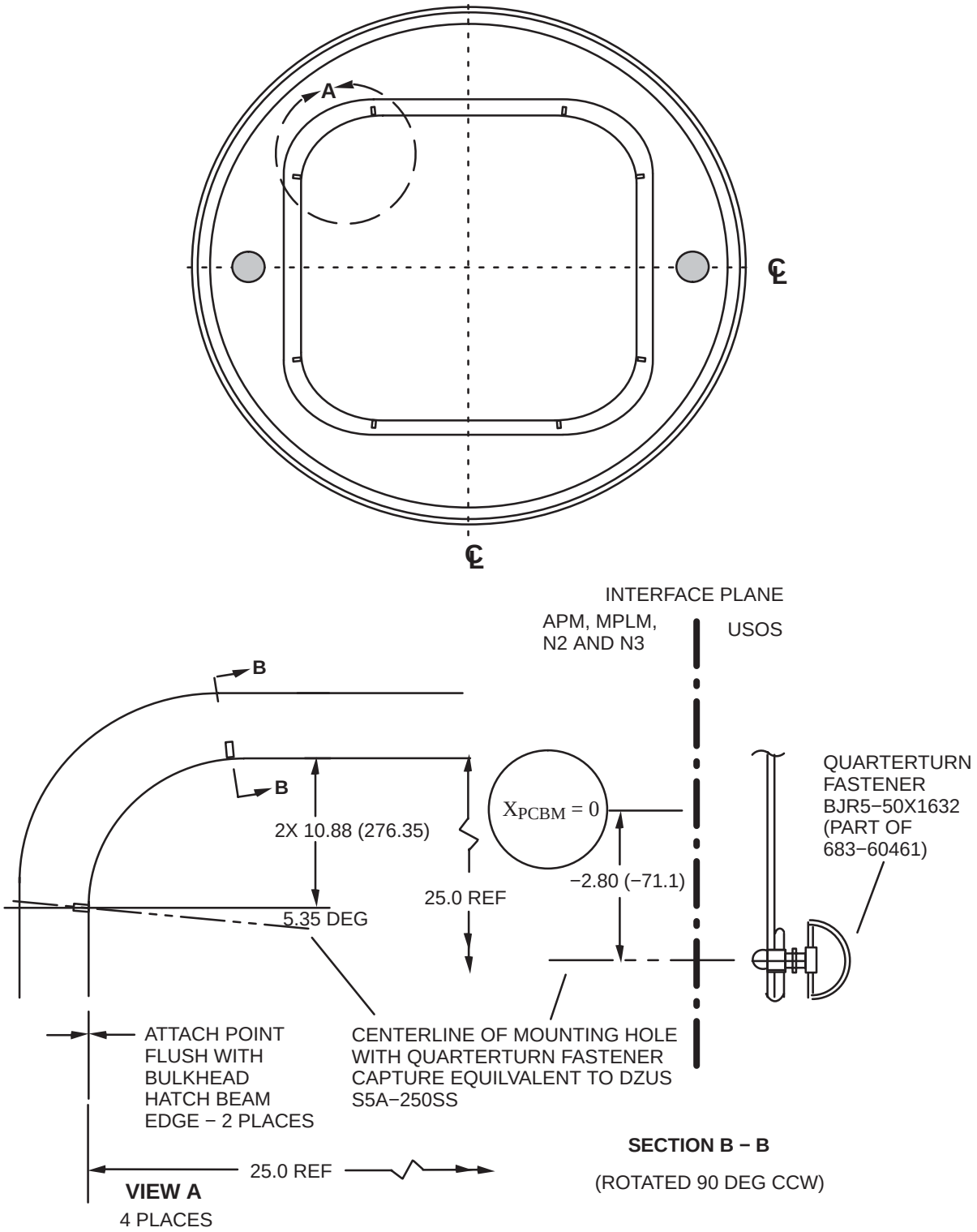

FIGURE 3.3.8−3 CLOSEOUT PANEL TO APM, MPLM, NODE 2 AND NODE 3 PCBM AXIAL BULKHEAD INTERFACE

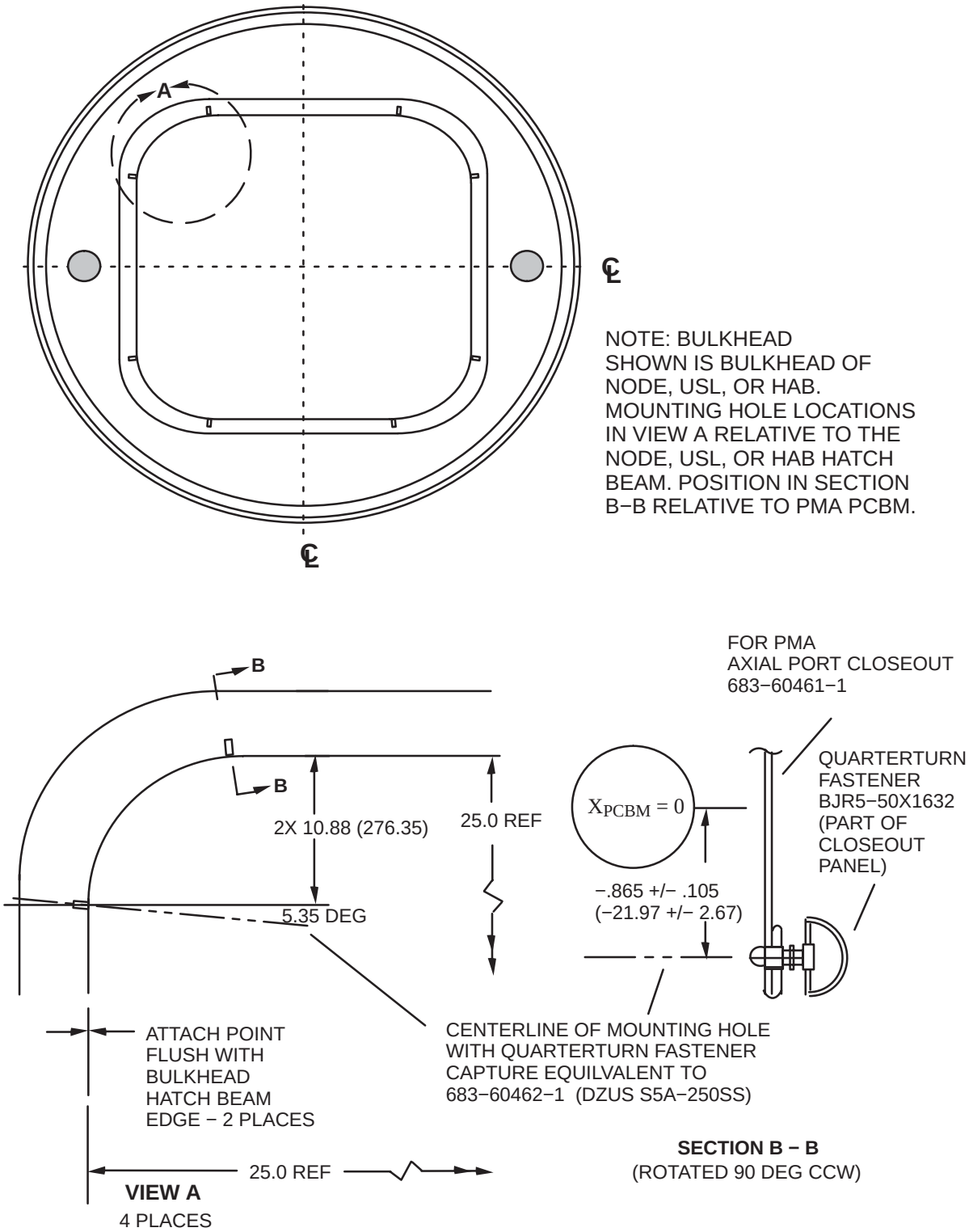

FIGURE 3.3.8−4 CLOSEOUT PANEL TO PMA INTERFACE

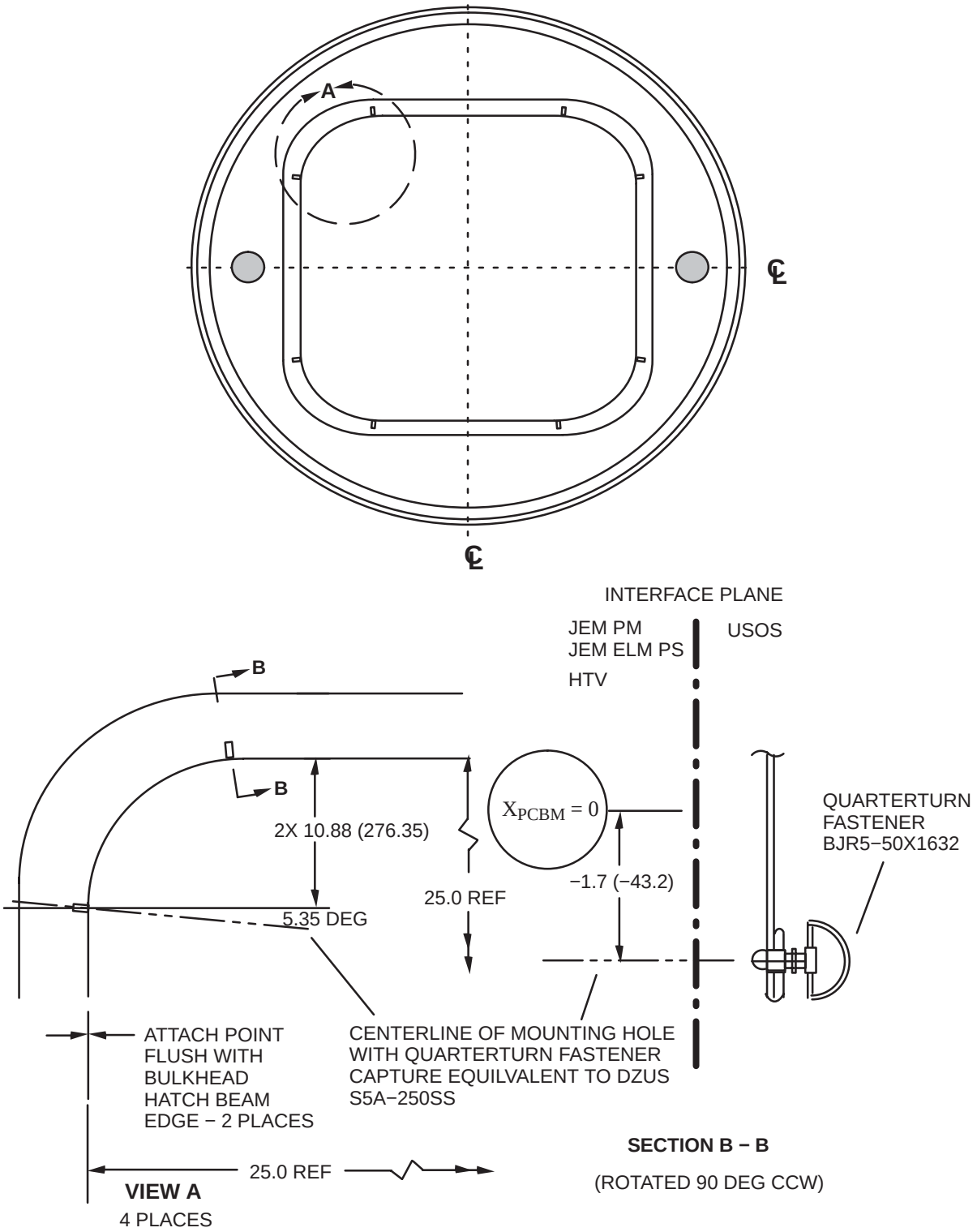

FIGURE 3.3.8−5 CLOSEOUT PANEL TO JEM PM, JEM ELM PS AND HTV AXIAL BULKHEAD INTERFACE

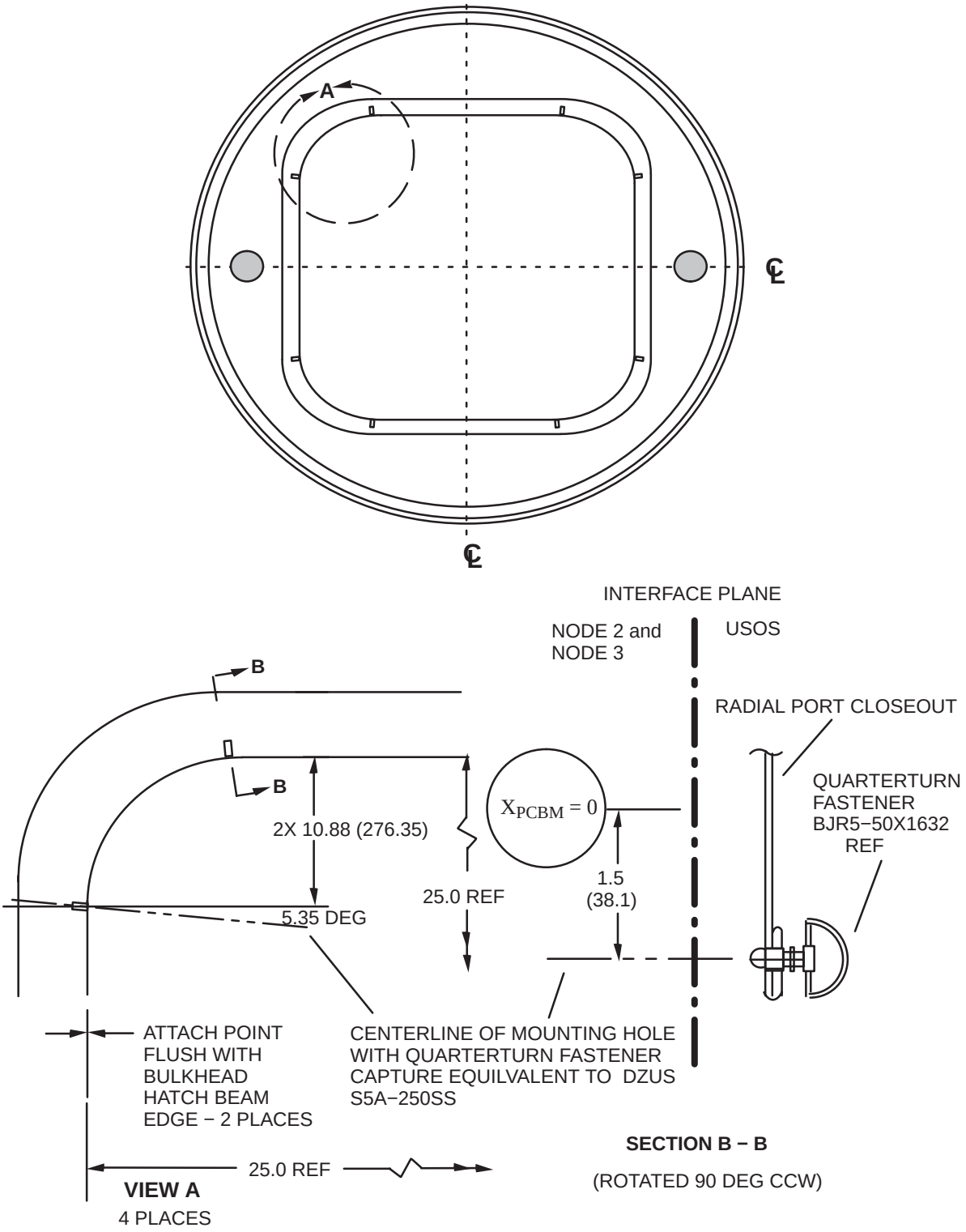

FIGURE 3.3.8−6 CLOSEOUT PANEL TO NODE 2 & 3 RADIAL BULKHEAD INTERFACE

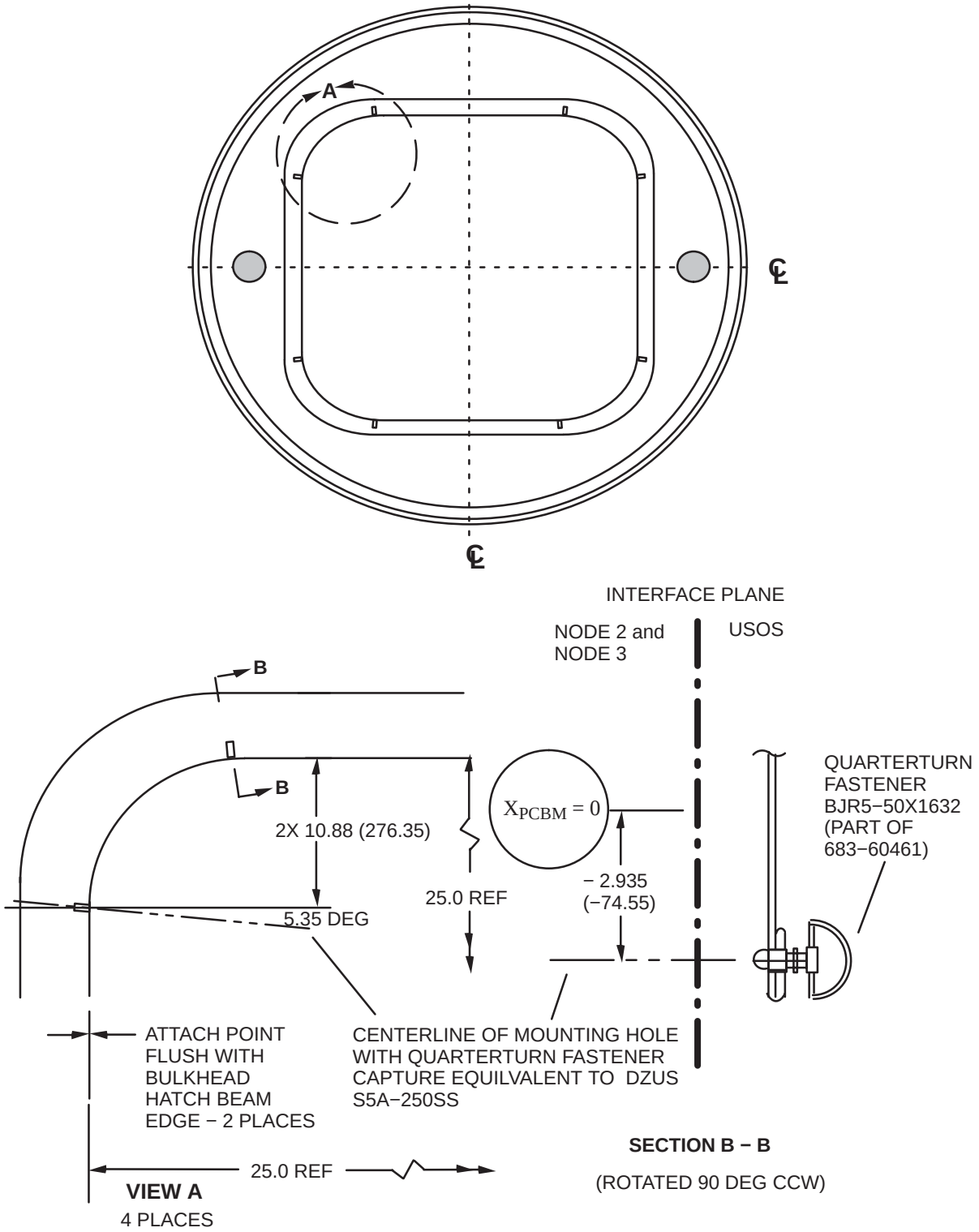

FIGURE 3.3.8−7 CLOSEOUT PANEL TO NODE 2 AND NODE 3 ACBM AXIAL BULKHEAD INTERFACE

3.3.9 M/D CENTER DISK BRACKET INTERFACE DETAILS

The Radial Port M/D Center Disk mounts to the bulkhead in the vacinity of the Motor Controllers. Brackets are attached to the module bulkhead via bolts and inserts. Insert locations and descriptions are shown in Figure 3.3.9−1, Radial Port Center Disk Bracket Hole Details (Node Radial Ports Only).

3.3.9.1 AXIAL ACBM HATCH BEAM HOLES

Axial port ACBM motor controller ground straps attach to the element hatch beam. Figure 3.3.9.1−1, Axial ACBM Ground Strap Hole Details, provides the insert locations to support ground straps.

3.3.10 PASSIVE THERMAL EQUIPMENT ATTACHMENT PROVISIONS

Locations and provisions for attachment of external passive thermal protection equipment are described in Note 2 of Figure 3.3.7.1−2, Typical Handling/Lift Point Hole. These locations apply to both the Passive and Active CBM (except for Node radial ports). Pieces of hook and/or loop fastener tapes may be bonded to the external surface of the ring for attachment of the external passive thermal protection. These fastener tapes may be match located from insulation assemblies and allow M/D skirt assembly to be mounted around the ring. External available hook/loop attachment areas are shown in Figure 3.3.10−1, Passive CBM External Attachment Provisions; Figure 3.3.10−2, Alignment Socket Details; Figure 3.3.10−3, Thermal Standoff Details; Figure 3.3.10−3.1, Follower Stay Out Zone; Figure 3.3.10−3.2, Contamination Cover Stay Out Zone; Figure 3.3.10−4, Active CBM External Attachment Provisions; Figure 3.3.10−5, Alignment Pin Details; Figure 3.3.10−6, Strike Plate Details; Figure 3.3.10−6.1, Bumper Stay Out Zone; Figure 3.3.10−7, Passive CBM Skirt Attach Points; and Figure 3.3.10−8, PCBM Skirt Support Details.

Locations and provisions for attachment of internal passive thermal protection equipment are shown in Figure 3.3.10−9, PCBM Passive Thermal Attach Locations−Internal; Figure 3.3.10−10, PCBM Passive Thermal Available Hole Attach Locations−Internal (Section A−A of Ring Gusset); Figure 3.3.10−11, PCBM Gusset Details − Internal; and Figure 3.3.10−12, PCBM Available Attachment Area − Internal Face. These locations only apply to Passive CBM rings. Pieces of hook and/or loop fastener tapes may be bonded to the internal surface of the ring for attachment of the internal passive thermal protection. These fastener tapes may be match located from insulation assemblies.

Figure 3.3.10−13, Typical PCBM Envelope for MLI Installation, depicts the typical volume associated with MLI installation.

3.3.10.1 AVAILABLE HOLE LOCATIONS FOR SHIELDING ON ACBM/PCBM RINGS

Available locations for attachment of shielding close−out or passive thermal control hardware are shown in Figure 3.3.10.1−1, Close−out Attachment Hole Locations for Active and Passive CBM Structural Rings. A typical hole is detailed in Figure 3.3.10.1−2, Typical Close−Out Attachment Hole Configuration.

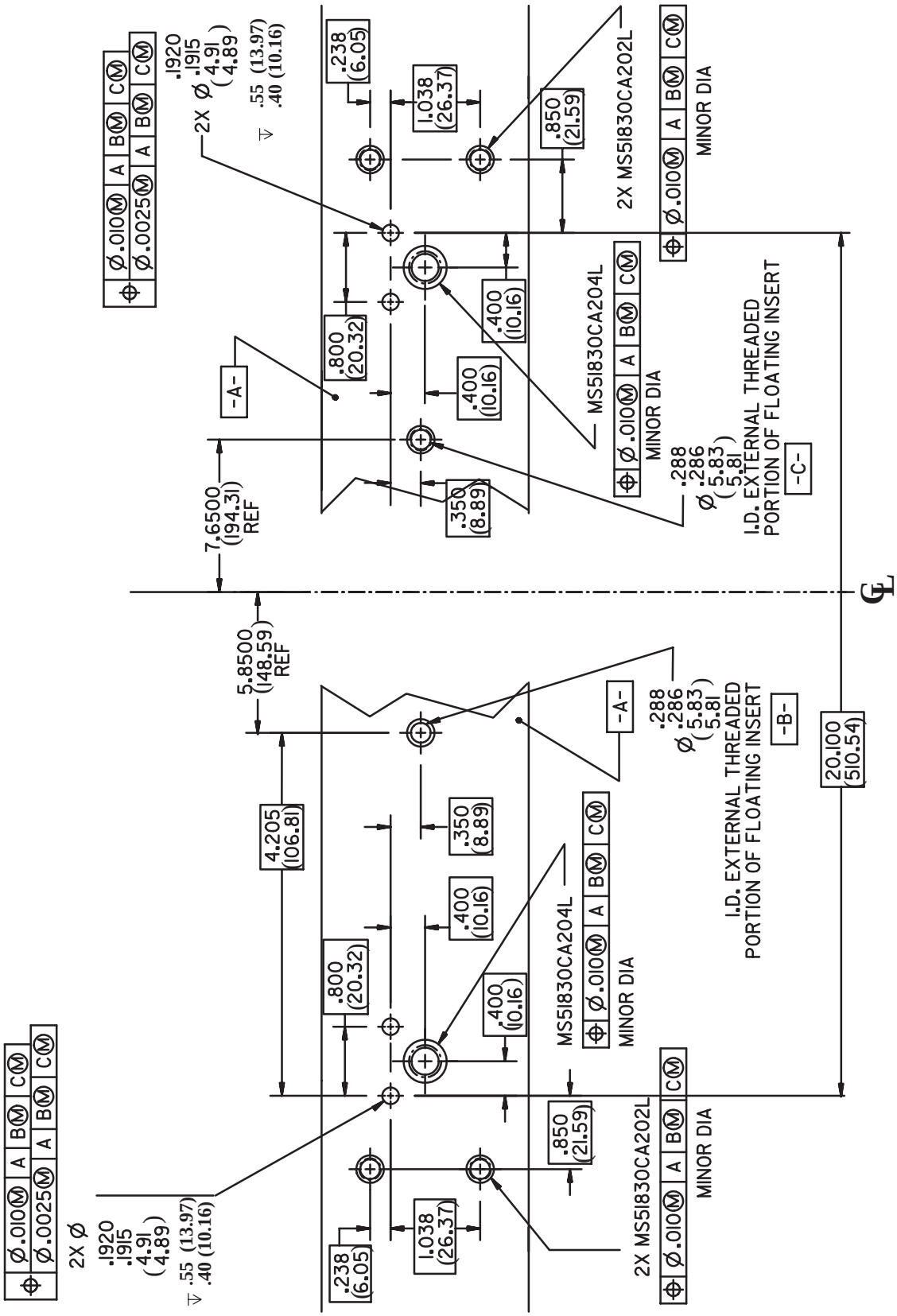

FIGURE 3.3.9−1 RADIAL PORT M/D CENTER DISK BRACKET HOLE DETAILS (NODE RADIAL PORTS ONLY)

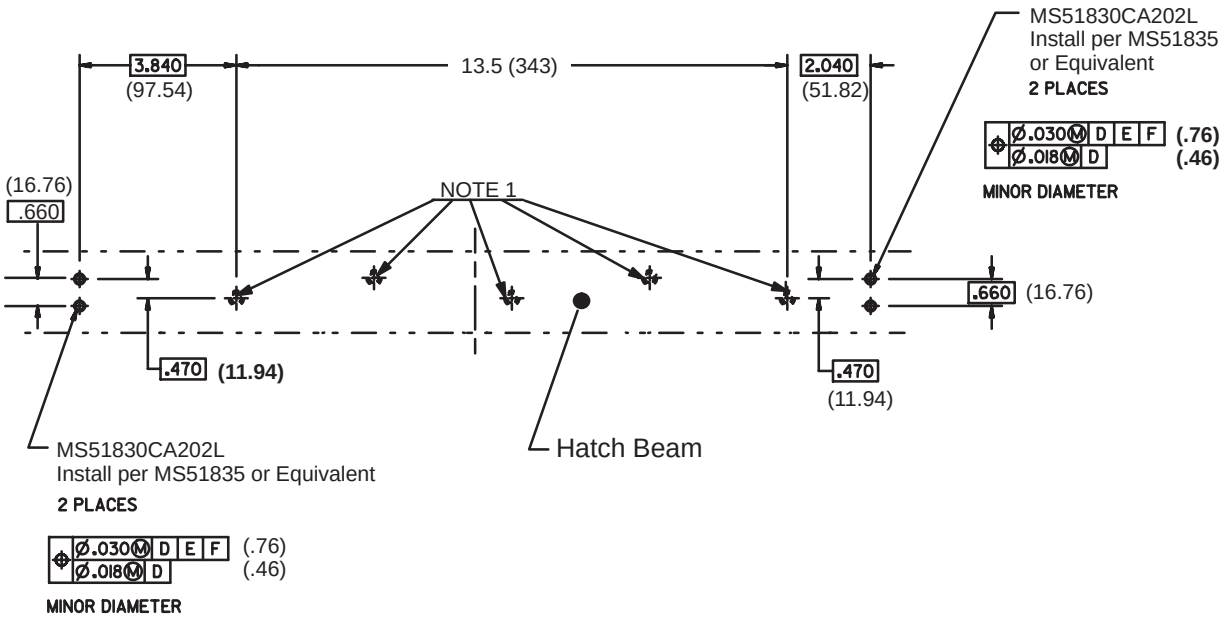

NOTE 1: Motor Controller Mounting Hole Details in Figures 3.3.4.2.1−2 and 3.3.4.3.1−3

FIGURE 3.3.9.1−1 AXIAL ACBM GROUND STRAP HOLE DETAILS

3.3.11 ACBM WIRE HARNESS ATTACHMENT LOCATIONS

Active CBMs require hole/insert locations on the pressurized element bulkhead for support of wire harness used for power and data distribution. The following Boeing drawings will be used to define the required locations on the applicable ISS element:

- Node 1 Axial / Lab Axial /Hab Axial, Drawing 683−13418, Sheet 2
- Node 1 /Node 2 / Node 3 Radial, Drawing 683−13418, Sheet 1
- JEM Radial Drawing 683−13418, Sheet 2
- Node 2/ Node 3 Axial, Drawing 683−13418, Sheet 3 and Sheet 4

Inserts will be provided by the pressurized element provider per Boeing drawing 683−13418. Attaching fasteners and clamps will be provided by Boeing.

For Node 2 and 3 radial ports, deviations from Drawing 683−13418, Sheet 1 reported in Figure 3.3.11−1, Deviation from 683−13418, Sheet 1 for Node 2 and Node 3, are applied.

For JEM PM Radial Port, deviations from Drawing 683−13418, Sheet 2 are shown in Figure 3.3.11−2, Deviation from 683−13418, Sheet 2 for JEM PM Radial Port, are applied.

3.3.12 NODE 2 RADIAL PORT M/OD SHIELD/ACBM INTERFACES

Node 2 Meteoroid and Orbital Debris (M/OD) shields shall be attached to the ACBM using the 683−27927−1 and −2 brackets. The location of the brackets are as defined in Figure 3.3.12−1, M/OD Bracket Locations and Figure 3.3.12−2, M/OD Bracket Detail.

The maximum limit level out of plane load imposed by Node 2 on the attachment bracket interface shall not be greater than 53 lbs (236.0 N).

3.3.13 PCBM INTERFACES FOR CUPOLA HANDRAIL BRACKETS

Locations and provisions for attachment of the Cupola lower handrail brackets to the Passive CBM are described in Figures 3.3.13−1 to 3.3.13−5. The design details shown augment those details shown on Figures 3.3.10−9 through 3.3.10−11, for Cupola application only.

The defined interface provisions only apply to the Passive CBM ring interfacing with the Cupola and only at the identified locations.

The Cupola Lower Handrail Brackets shall be installed after installing the CBM ground strap bracket(s) on the gussets identified in Figure 3.3.10−9.

3.3.13.1 CUPOLA HANDRAIL INDUCED LOADS

The maximum shear load on each bolt shall be ≤ 4600 N (1034 Lb_f).

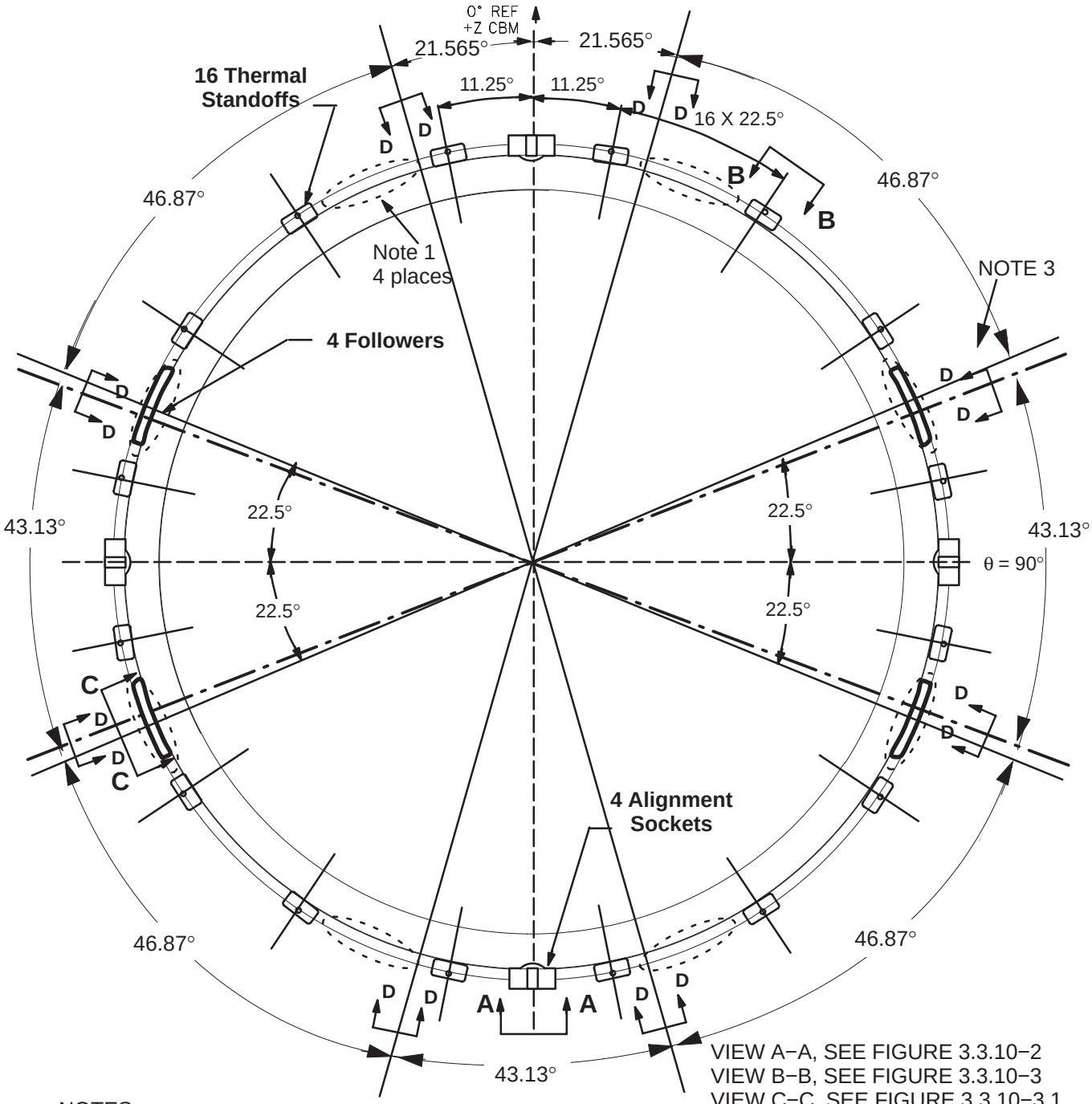

VIEW A−A, SEE FIGURE 3.3.10−2
VIEW B−B, SEE FIGURE 3.3.10−3
VIEW C−C, SEE FIGURE 3.3.10−3.1
VIEW D−D, SEE FIGURE 3.3.10−3.2

NOTES:

1) To support two different clocking orientations on−orbit; PMA−2, PMA−3 and JEM ELM−PS have an additional set of followers 22.5° from the 0° and 180° locations for a total of 8 followers.
2) Does not include M/D skirt interfaces, see Figure 3.3.10−7.
3) Stayout Zone to support contamination cover installation for launch (8 places). Not applicable to PMAs, Z1 Truss, MPLM, and HTV elements.

FIGURE 3.3.10−1 PASSIVE CBM EXTERNAL ATTACHMENT PROVISIONS

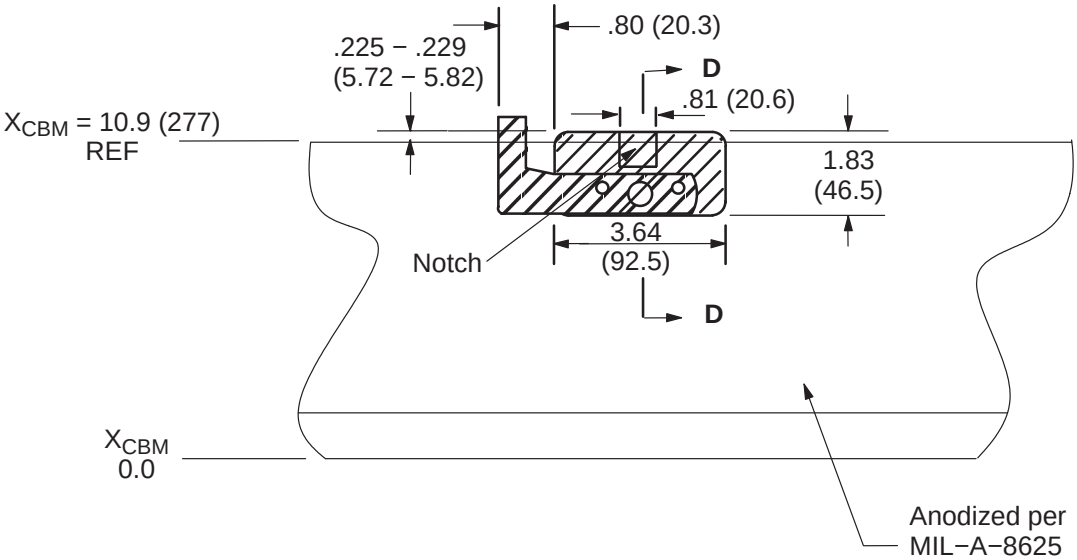

VIEW A − A FROM FIGURE 3.3.10−1

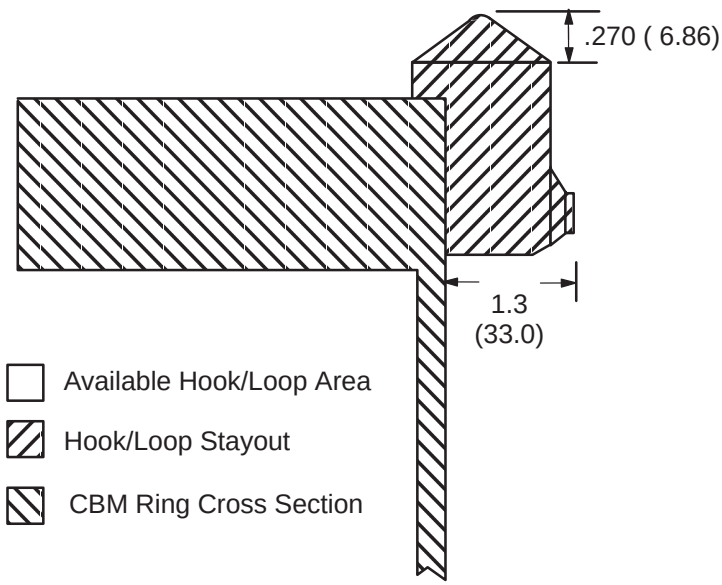

VIEW D − D

MLI can go over the alignment socket, but must not go beyond X_{CBM} = 10.65 (270.5), except at the notch, the MLI should not go beyond X_{CBM} = 10.35 (262.9).

NOTE: 1) Socket configuration at $\theta = 0^o$ and 180°

NOTE: 2) Surface finish anodization can be locally removed in the available hook/loop area for MLI attachment fasteners. The removal of the surface finish shall be in accordance with International Partners or Boeing approved standard PMP processes. Touch up finish using chemical conversion coating on any remaining bare aluminum is required.

FIGURE 3.3.10−2 ALIGNMENT SOCKET DETAILS (SHEET 1 OF 2)

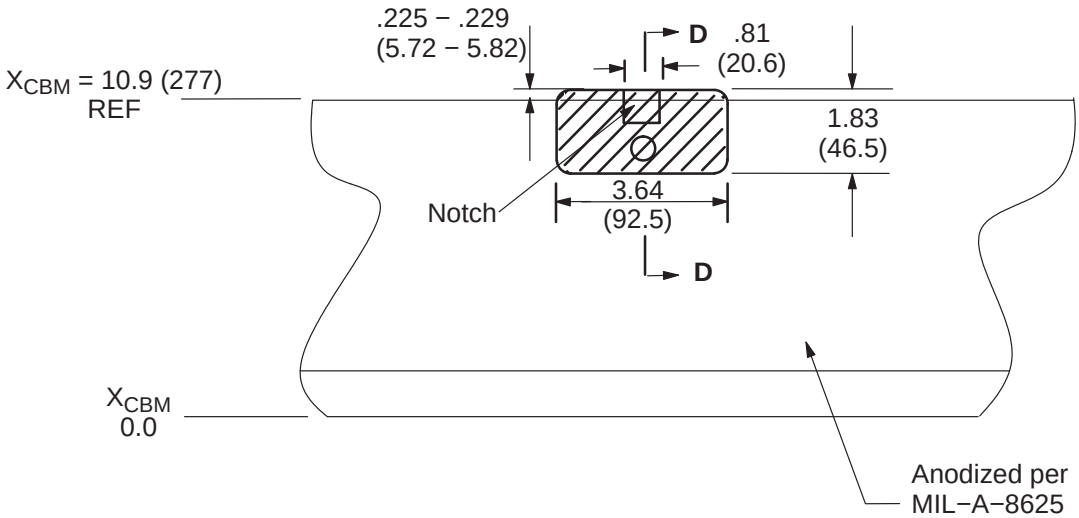

VIEW A − A FROM FIGURE 3.3.10−1

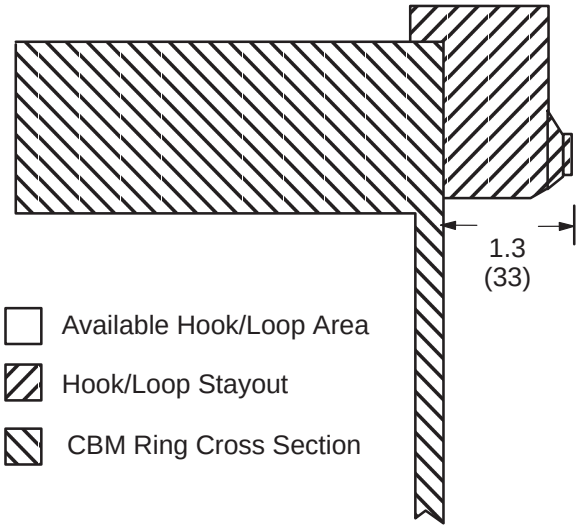

VIEW D − D

MLI can go over the alignment socket, but must not go beyond X_{CBM} = 10.65 (270.5), except at the notch, the MLI should not go beyond X_{CBM}= 10.35 (262.9).

NOTE: 1) Socket configuration at $\theta = 90^o$ and 270°

NOTE: 2) Surface finish anodization can be locally removed in the available hook/loop area for MLI attachment fasteners. The removal of the surface finish shall be in accordance with International Partners or Boeing approved standard PMP processes. Touch up finish using chemical conversion coating on any remaining bare aluminum is required.

FIGURE 3.3.10−2 ALIGNMENT SOCKET DETAILS (SHEET 2 OF 2)

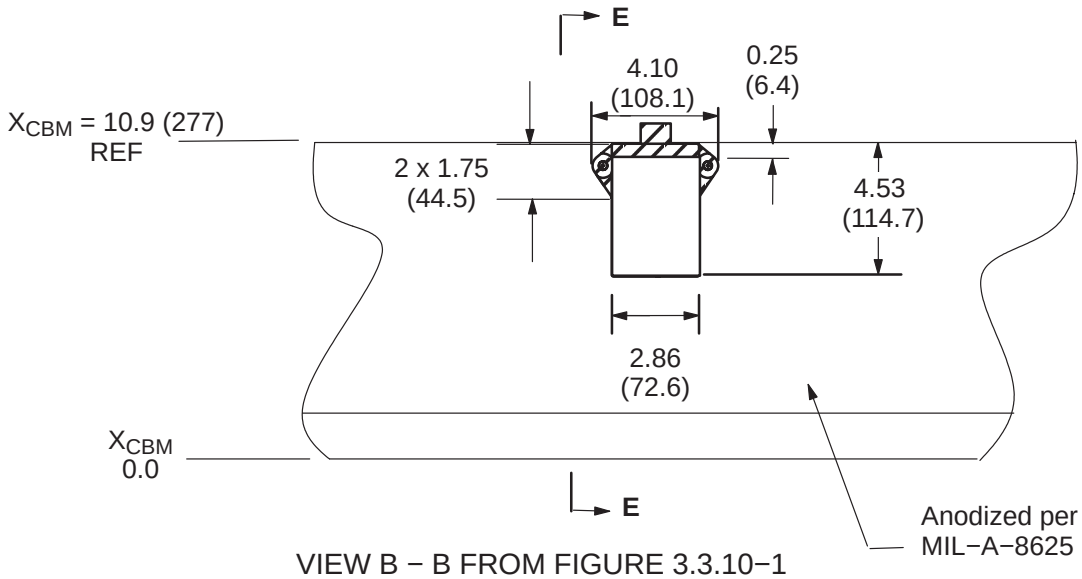

VIEW B − B FROM FIGURE 3.3.10−1

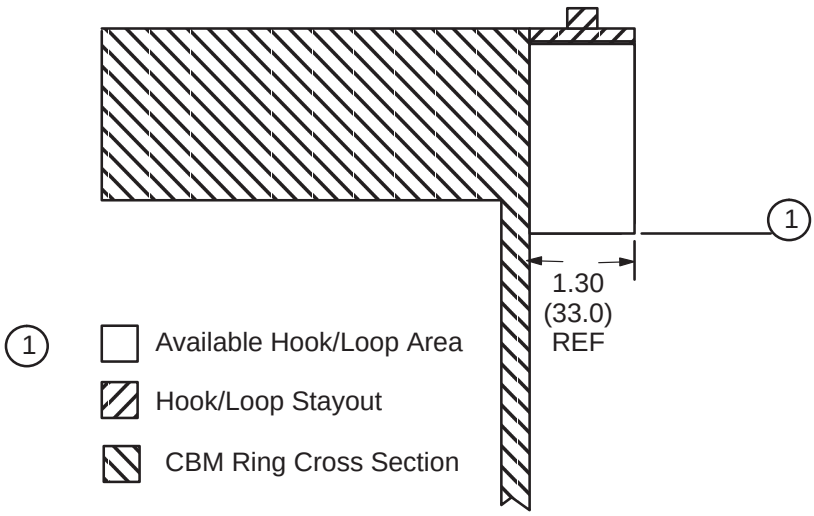

VIEW E − E

NOTE: 1) MLI can go over the thermal standoff, but must not go beyond X_{CBM} = 10.65 (270.5)

NOTE: 2) Surface finish anodization can be locally removed in the available hook/loop area for MLI attachment fasteners. The removal of the surface finish shall be in accordance with International Partners or Boeing approved standard PMP processes. Touch up finish using chemical conversion coating on any remaining bare aluminum is required.

FIGURE 3.3.10−3 THERMAL STANDOFF DETAILS

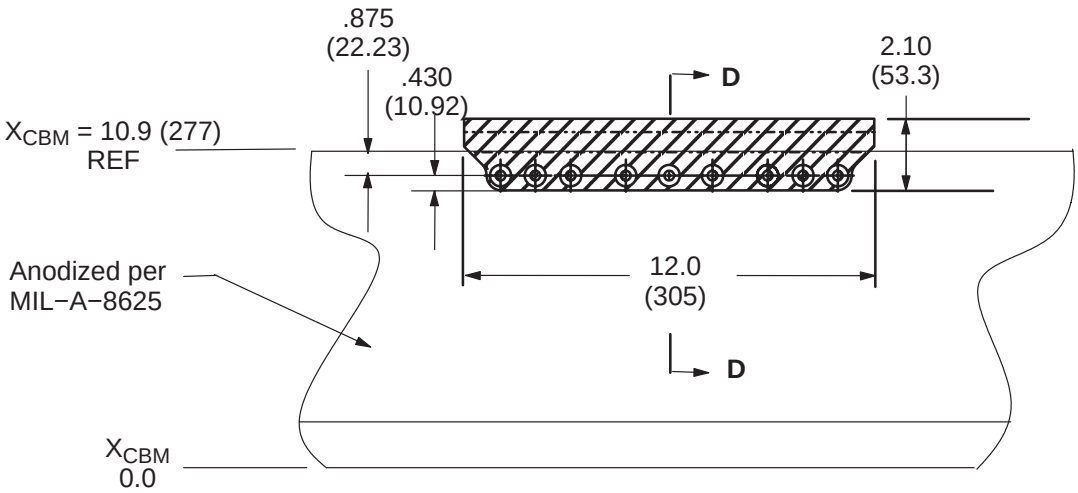

VIEW C− C FROM FIGURE 3.3.10−1

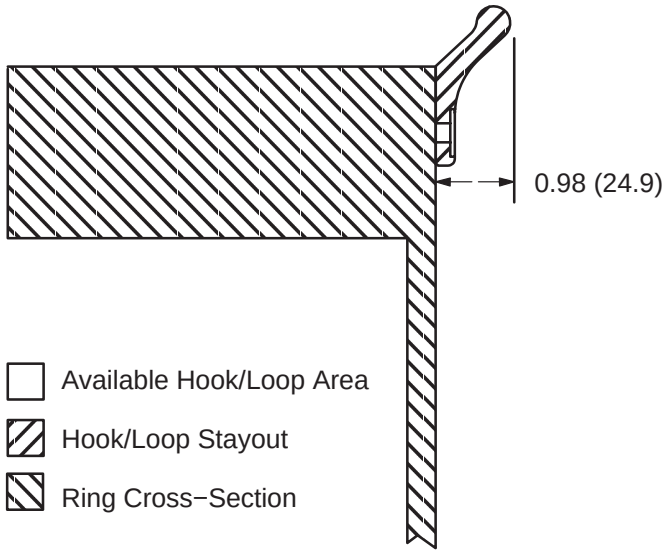

VIEW D − D

NOTES:

1) MLI can go over the follower, but must not go beyond X_{CBM} = 10.9 (277)
2) Surface finish anodization can be locally removed in the available hook/loop area for MLI attachment fasteners. The removal of the surface finish shall be in accordance with International Partners or Boeing approved standard PMP processes. Touch up finish using chemical conversion coating on any remaining bare aluminum is required.

3.3.10−3.1 FOLLOWER STAY OUT ZONE

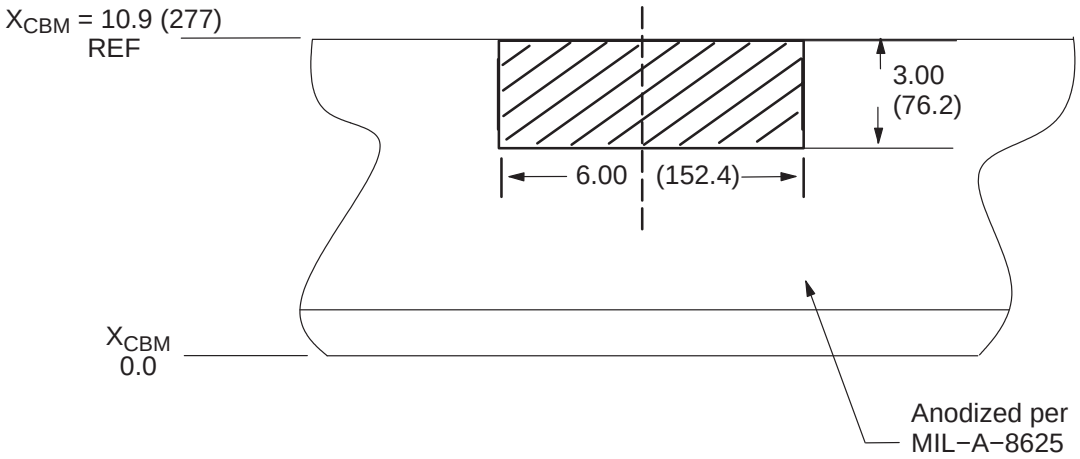

VIEW D − D FROM FIGURE 3.3.10−1

Available Hook/Loop Area

Hook/Loop Stayout

NOTES:

1) Surface finish anodization can be locally removed in the available hook/loop area for MLI attachment fasteners. The removal of the surface finish shall be in accordance with International Partners or Boeing approved standard PMP processes. Touch up finish using chemical conversion coating on any remaining bare aluminum is required.

FIGURE 3.3.10−3.2 CONTAMINATION COVER STAY OUT ZONE

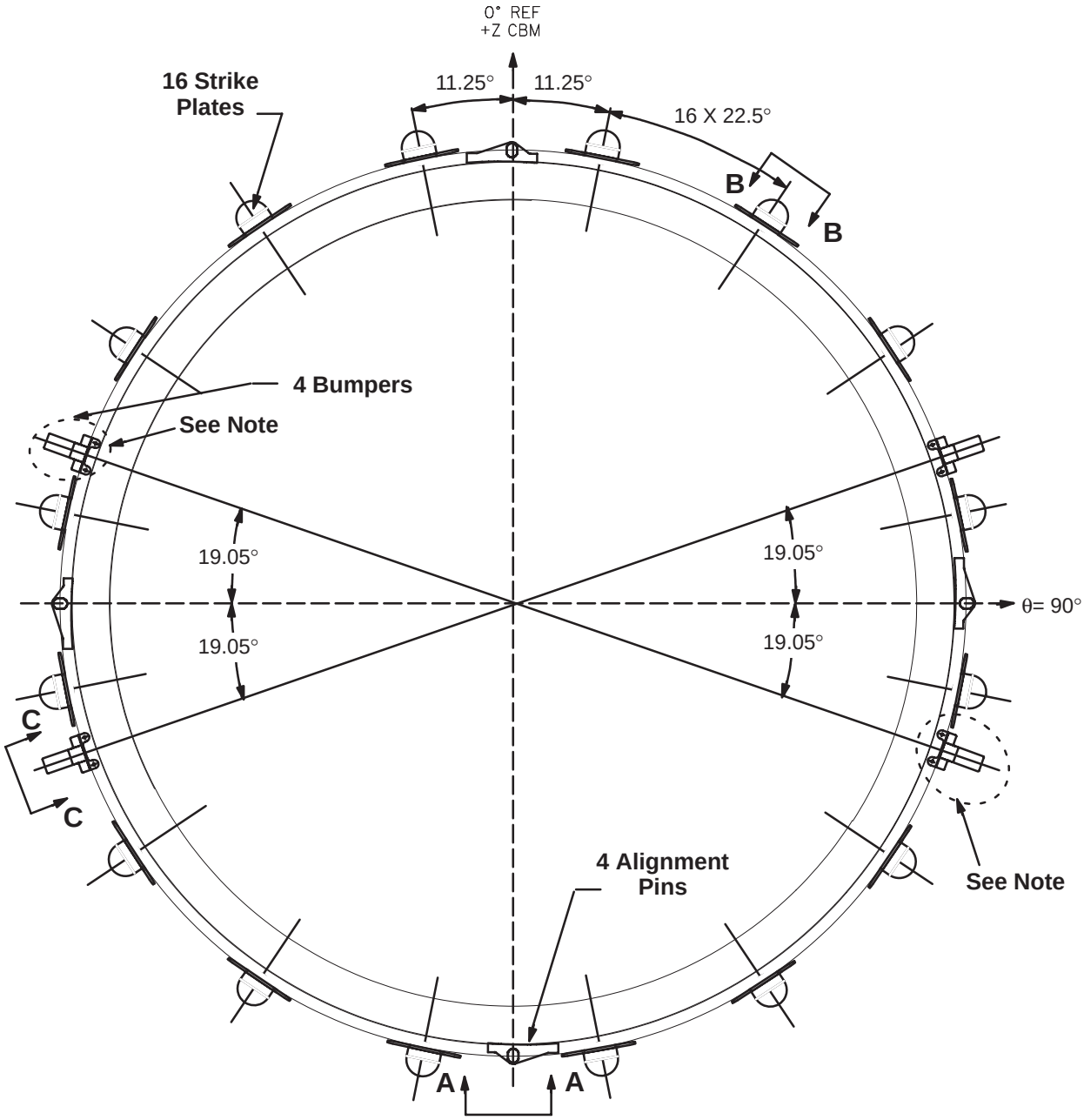

VIEW A−A, SEE FIGURE 3.3.10−2
VIEW B−B, SEE FIGURE 3.3.10−3
VIEW C−C, SEE FIGURE 3.3.10−6.1

NOTE: Bumpers in these locations use the tooling point for attachment (not available for MLI attachment and grounding).

FIGURE 3.3.10−4 ACTIVE CBM EXTERNAL ATTACHMENT PROVISIONS

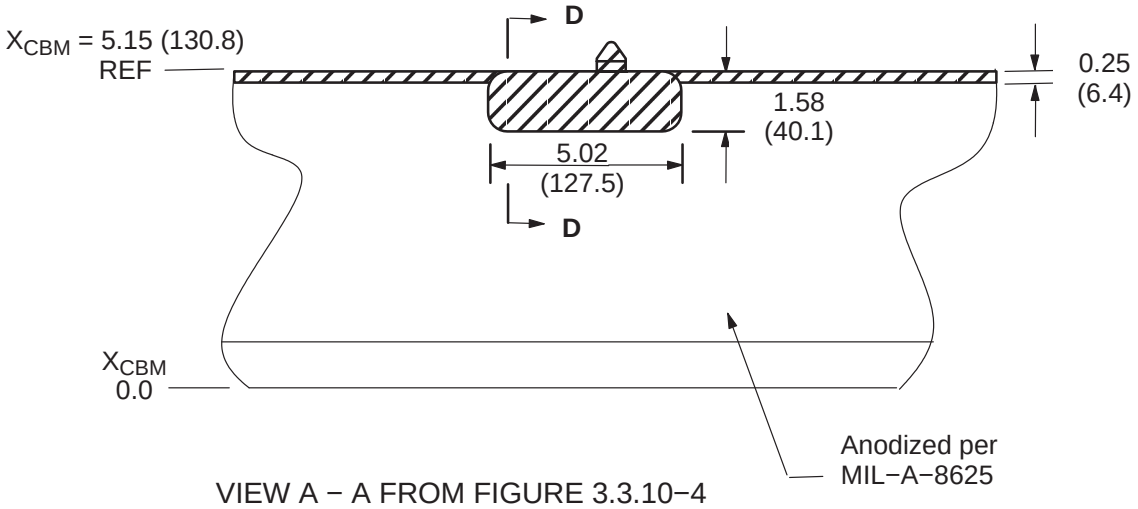

VIEW A − A FROM FIGURE 3.3.10−4

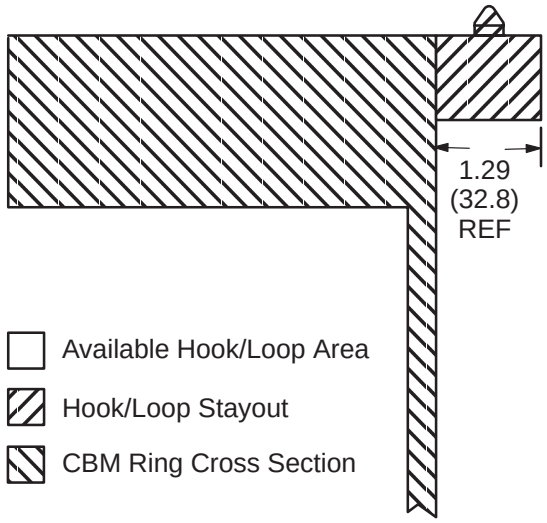

VIEW D − D

NOTE: 1) MLI can go over the alignment pin, but must not go beyond X_{CBM} = 4.9 (124)

NOTE: 2) Surface finish anodization can be locally removed in the available hook/loop area for MLI attachment fasteners. The removal of the surface finish shall be in accordance with International Partners or Boeing approved standard PMP processes. Touch up finish using chemical conversion coating on any remaining bare aluminum is required.

FIGURE 3.3.10−5 ALIGNMENT PIN DETAILS

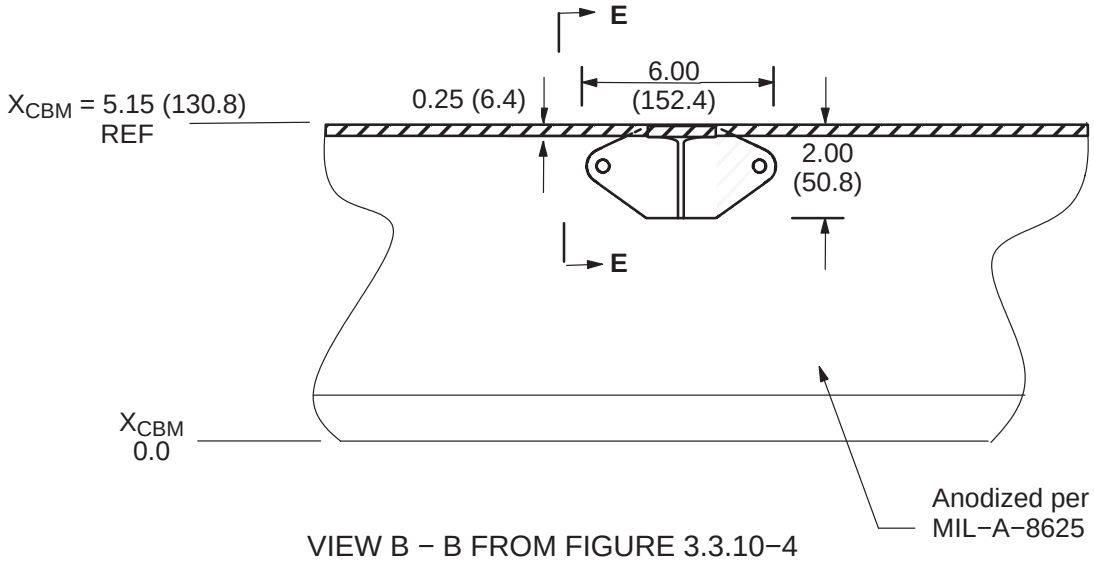

VIEW B − B FROM FIGURE 3.3.10−4

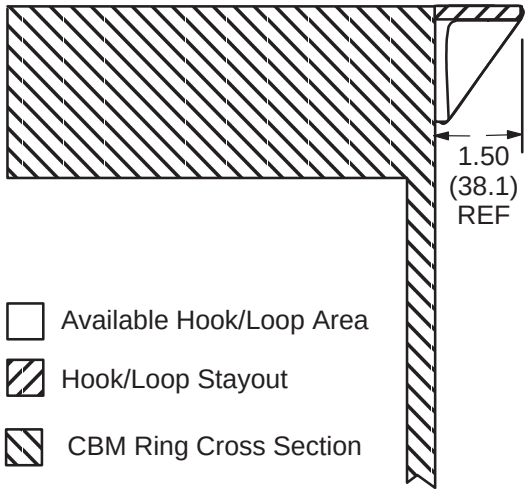

VIEW E − E

NOTE: 1) MLI can go over the strike plate, but must not go beyond X_{CBM} =4.9 (124)

NOTE: 2) Surface finish anodization can be locally removed in the available hook/loop area for MLI attachment fasteners. The removal of the surface finish shall be in accordance with International Partners or Boeing approved standard PMP processes. Touch up finish using chemical conversion coating on any remaining bare aluminum is required.

FIGURE 3.3.10−6 STRIKE PLATE DETAILS

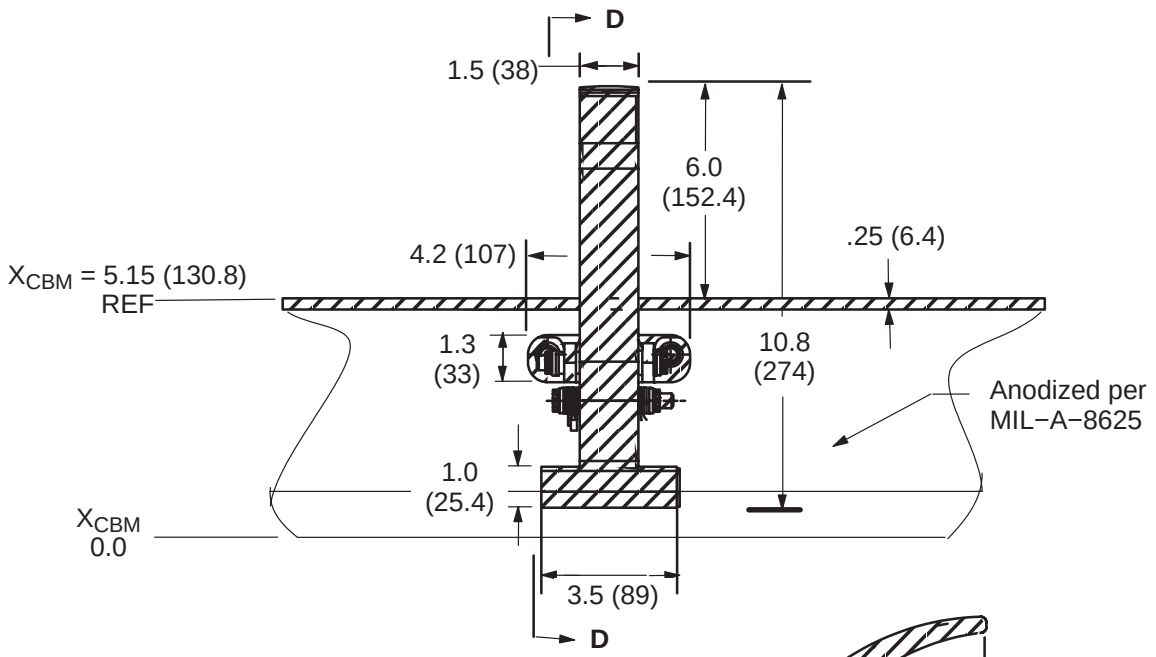

VIEW C − C FROM FIGURE 3.3.10−4

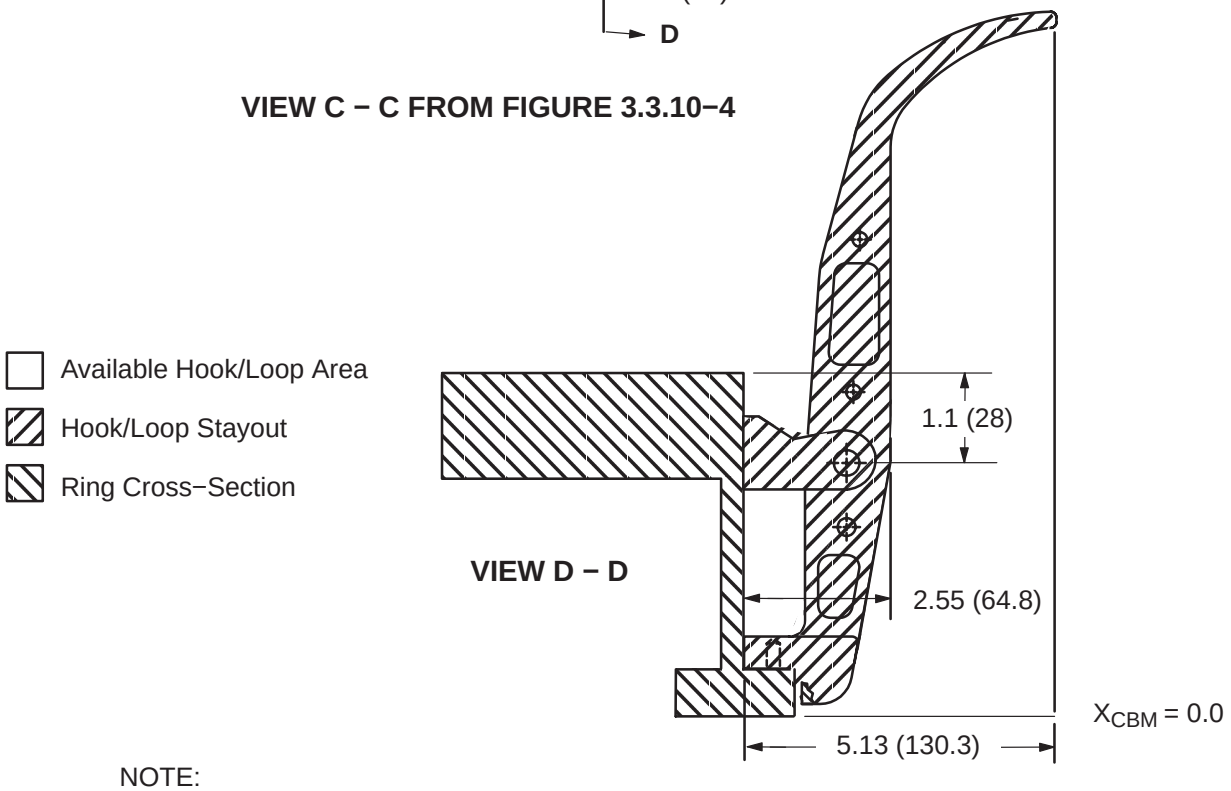

VIEW D − D

NOTE:

1) MLI can go over the bumper, but must not go beyond X_{CBM} = 4.9(124)
2) Surface finish anodization can be locally removed in the available hook/loop area for MLI attachment fasteners. The removal of the surface finish shall be in accordance with International Partners or Boeing approved standard PMP processes. Touch up finish using chemical conversion coating on any remaining bare aluminum is required.

FIGURE 3.3.10−6 .1 BUMPER STAY OUT ZONE

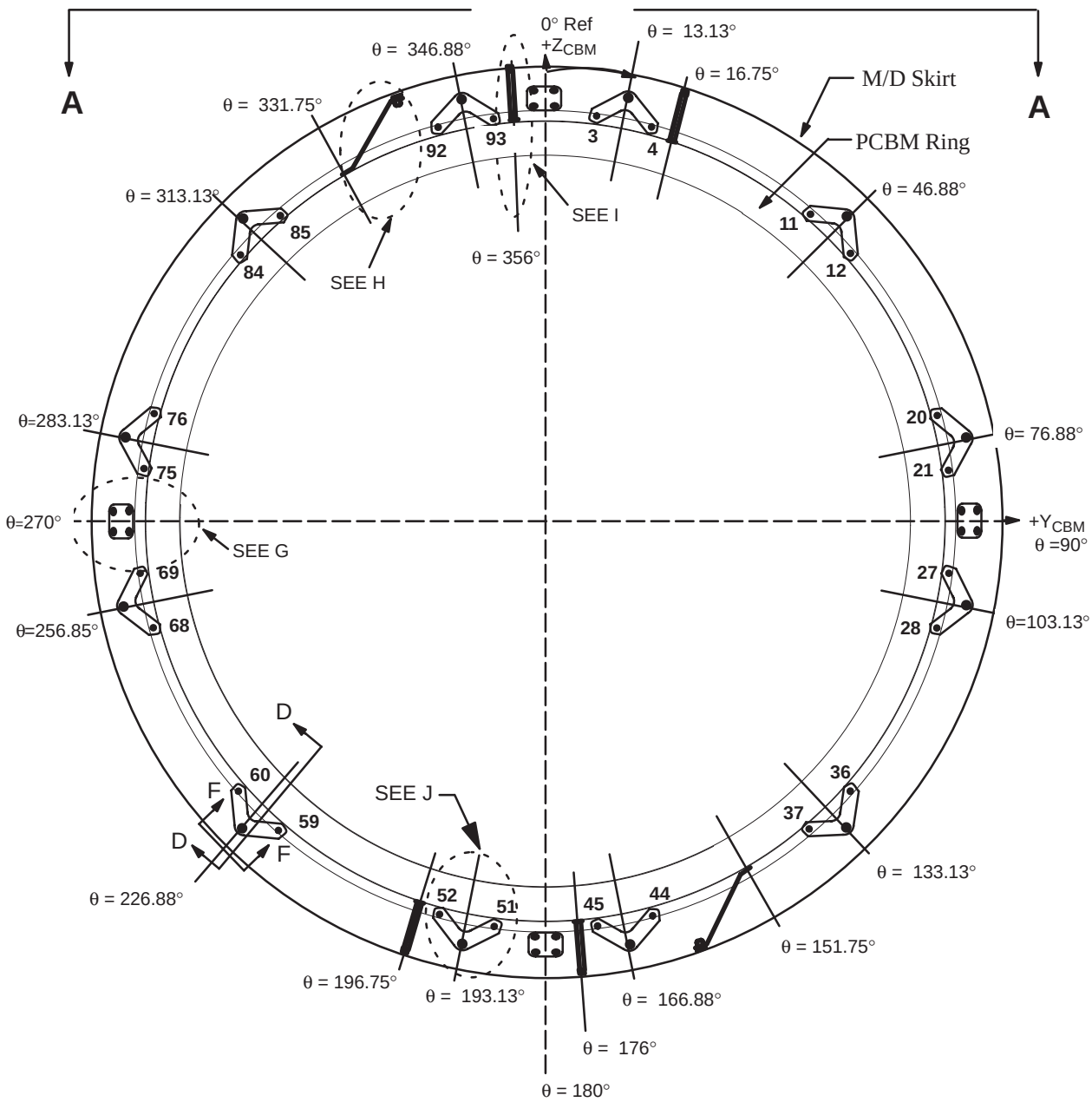

VIEW A − A (SEE Sheet 2)
VIEW D − D (SEE FIGURE 3.3.10−8, SHEET 1)
VIEW F − F (SEE FIGURE 3.3.10−8, SHEET 1)
VIEW G (SEE FIGURE 3.3.10−8, SHEET 1)
VIEW H (SEE FIGURE 3.3.10−8, SHEET 3)
VIEW I (SEE FIGURE 3.3.10−8, SHEET 3)
VIEW J (SEE FIGURE 3.3.10−8, SHEET 8)

NOTE 1: Not applicable to PMA PCBMs

NOTE 2: Bolt hole numbers 3−4, 11−12, 20−21, 27−28, 36−37, 44−45, 51−52, 59−60, 68−69, 75−76, 84−85, 92−93 reserved for bracket attachment.

FIGURE 3.3.10−7 PASSIVE CBM SKIRT ATTACH POINTS (SHEET 1 OF 9)

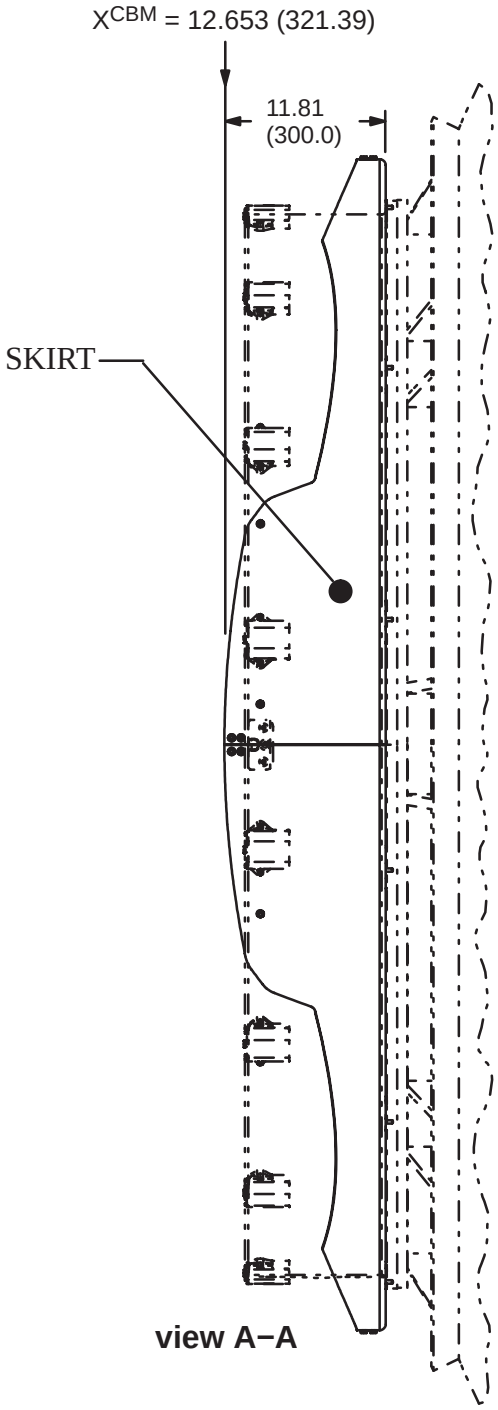

NOTE: See Sheets 3 through 9 for skirt detail.

FIGURE 3.3.10−7 PASSIVE CBM SKIRT ATTACH POINTS (SHEET 2 OF 9)

NOTE: Length B in Table, Sheet 5.

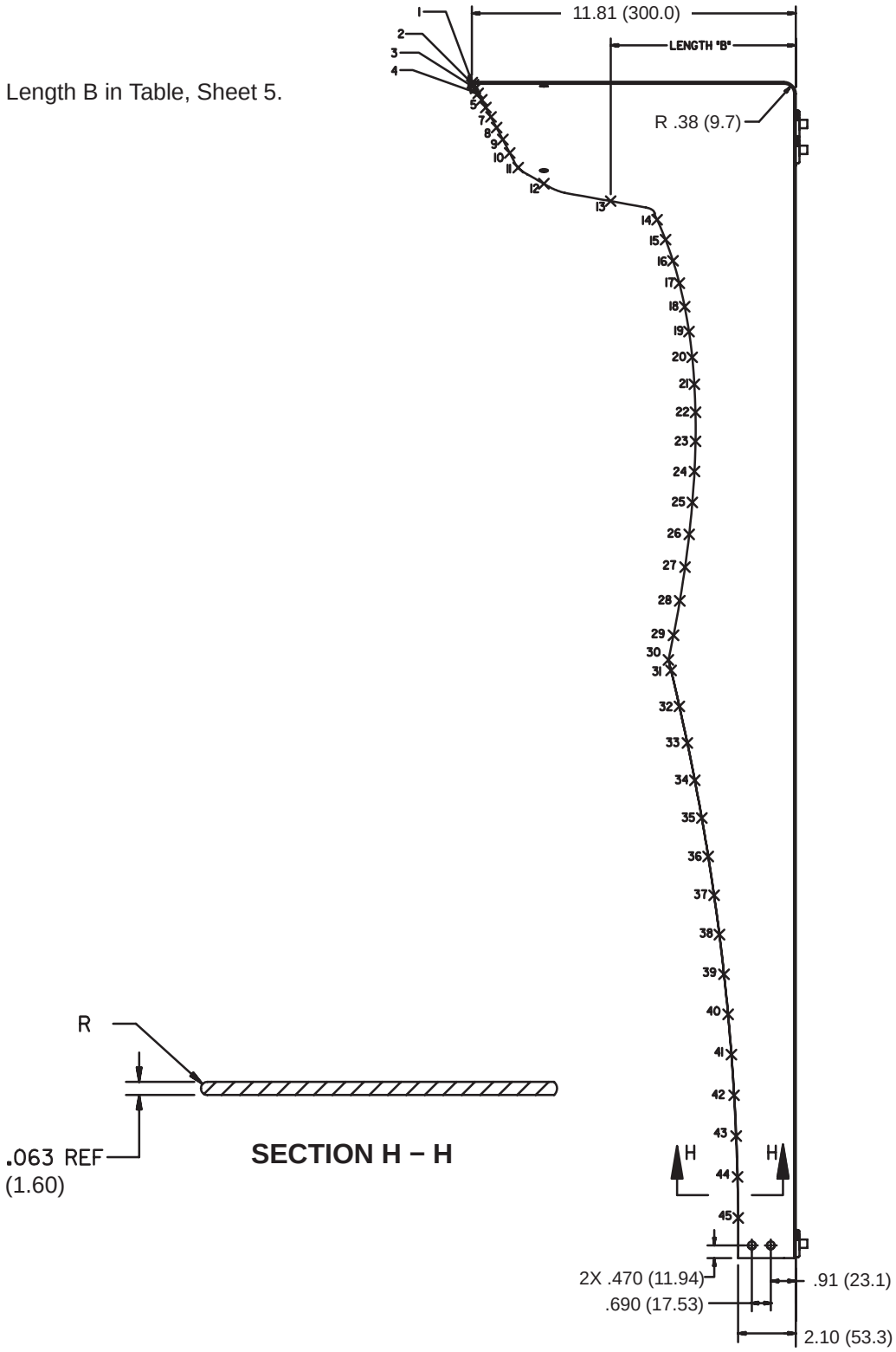

FIGURE 3.3.10−7 PASSIVE CBM SKIRT ATTACH POINTS (SHEET 3 OF 9)

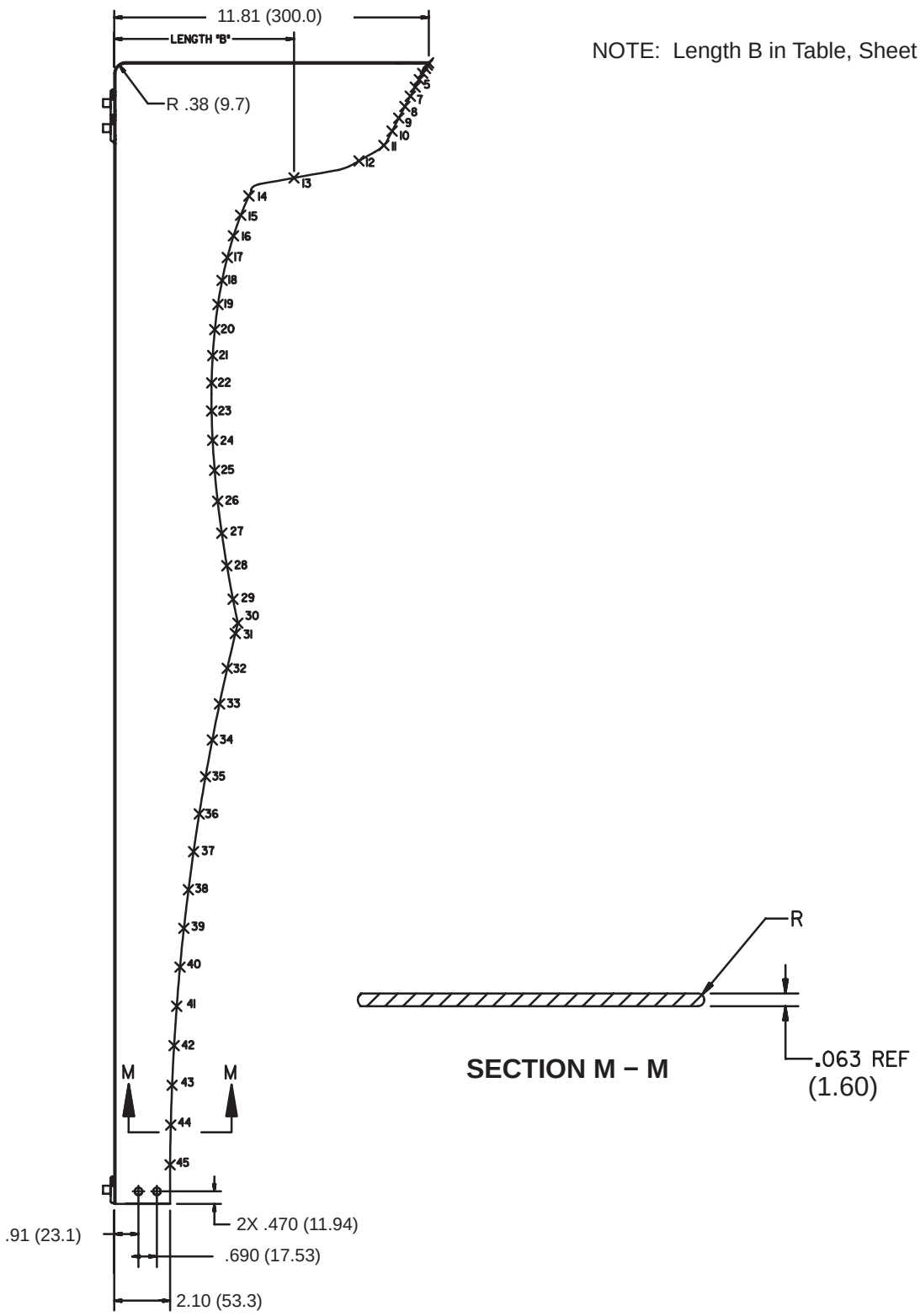

NOTE: Length B in Table, Sheet 5.

FIGURE 3.3.10−7 PASSIVE CBM SKIRT ATTACH POINTS (SHEET 4 OF 9)

TABLE			
POINT	ANGLE "A" ±.03°	LENGTH "B" ±.030	LENGTH "B" METRIC (0.76)
0	0°	+	+
1	2.°	11.799	299.69
2	4.00°	11.755	298.58
3	6.00°	11.683	297.75
4	8.00°	11.583	294.21
5	10.00°	11.455	290.96
6	12.00°	11.303	287.10
7	14.00°	11.119	282.42
8	16.00°	10.913	277.19
9	18.00°	10.684	271.37
10	20.00°	10.432	264.97
11	22.00°	10.125	257.18
12	24.00°	9.190	233.43
13	26.00°	6.751	171.48
14	28.00°	5.060	128.52
15	30.00°	4.751	120.68
16	32.00°	4.480	113.79
17	34.00°	4.247	107.87
18	36.00°	4.052	102.92
19	38.00°	3.896	98.96
20	40.00°	3.779	95.99
21	42.00°	3.700	93.98
22	44.00°	3.660	92.96
23	46.00°	3.658	92.91
24	48.00°	3.696	93.88
25	50.00°	3.772	95.81
26	52.00°	3.887	98.73
27	54.00°	4.040	102.62
28	56.00°	4.232	107.49
29	58.00°	4.462	113.33
30	59.40°	4.645	117.98
31	60.00°	4.551	115.60
32	62.00°	4.245	107.82
33	64.00°	3.956	100.48
34	66.00°	3.684	93.57
35	68.00°	3.430	87.12
36	70.00°	3.195	81.15
37	72.00°	2.981	75.72
38	74.00°	2.789	70.84
39	76.00°	2.619	66.52
40	78.00°	2.472	62.79
41	80.00°	2.349	59.66
42	82.00°	2.249	57.12
43	84.00°	2.175	55.25
44	86.00°	2.126	54.00
45	88.00°	2.102	53.39

FIGURE 3.3.10−7 PASSIVE CBM SKIRT ATTACH POINTS (SHEET 5 OF 9)

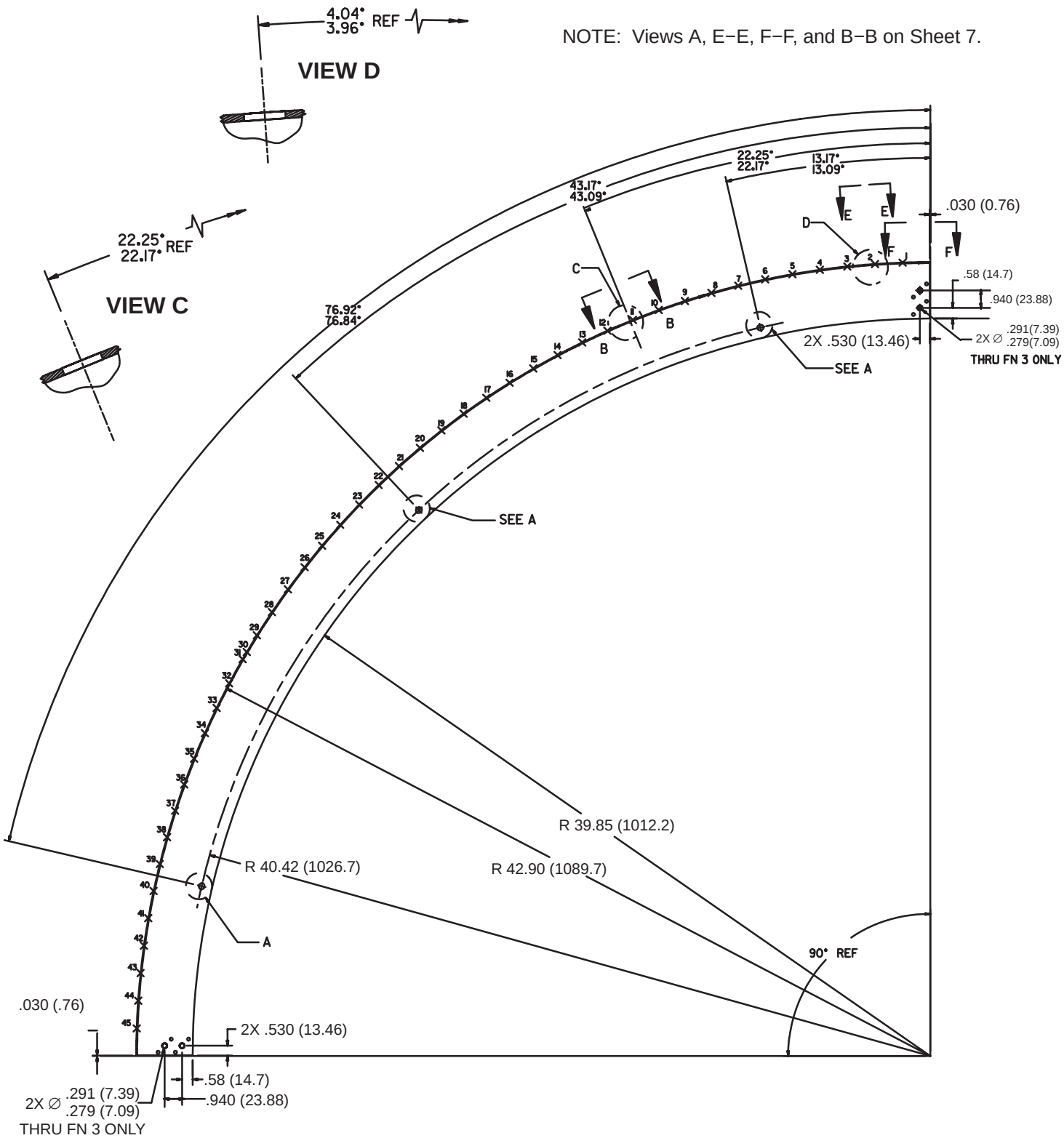

FIGURE 3.3.10−7 PASSIVE CBM SKIRT ATTACH POINTS (SHEET 6 OF 9)

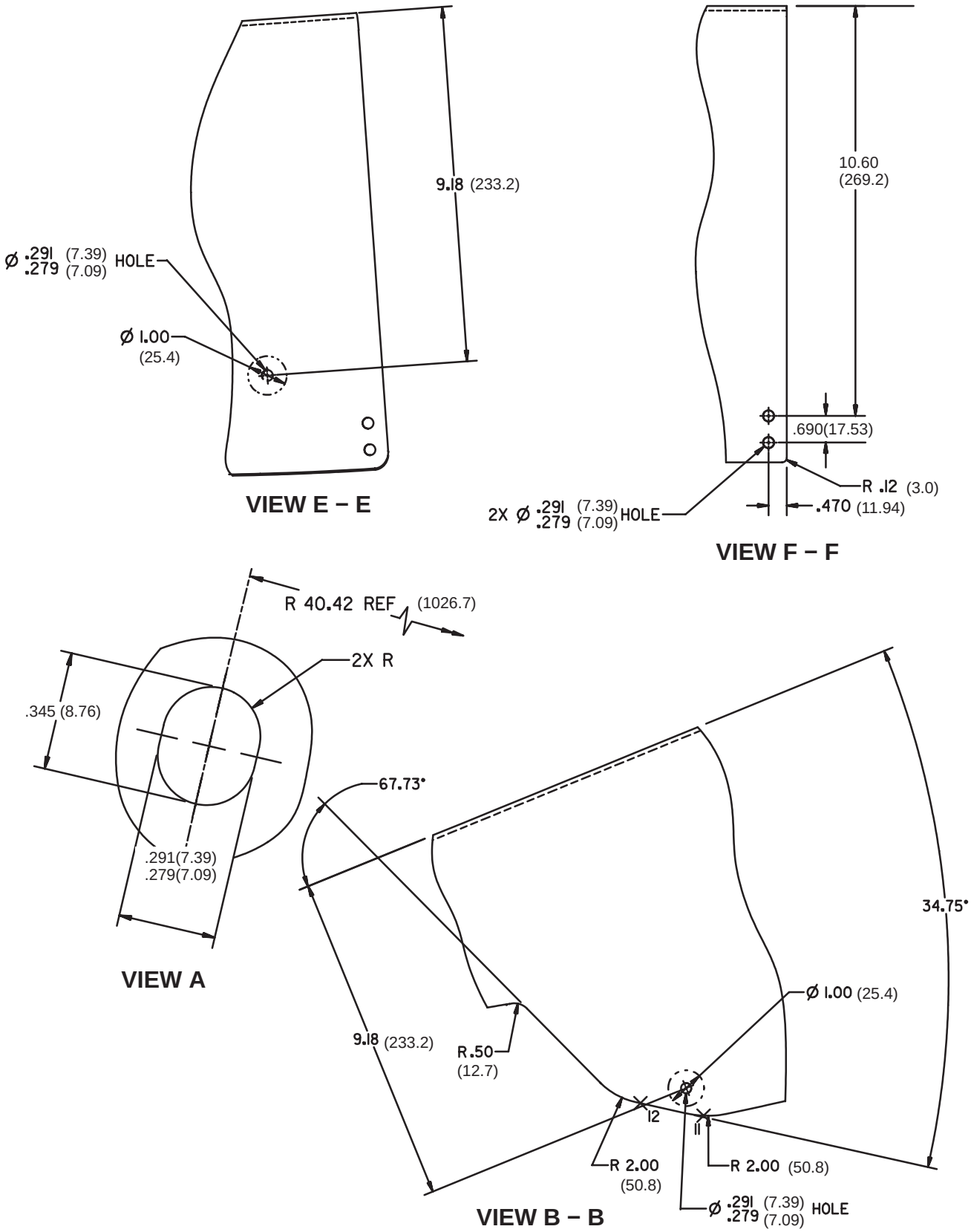

FIGURE 3.3.10−7 PASSIVE CBM SKIRT ATTACH POINTS (SHEET 7 OF 9)

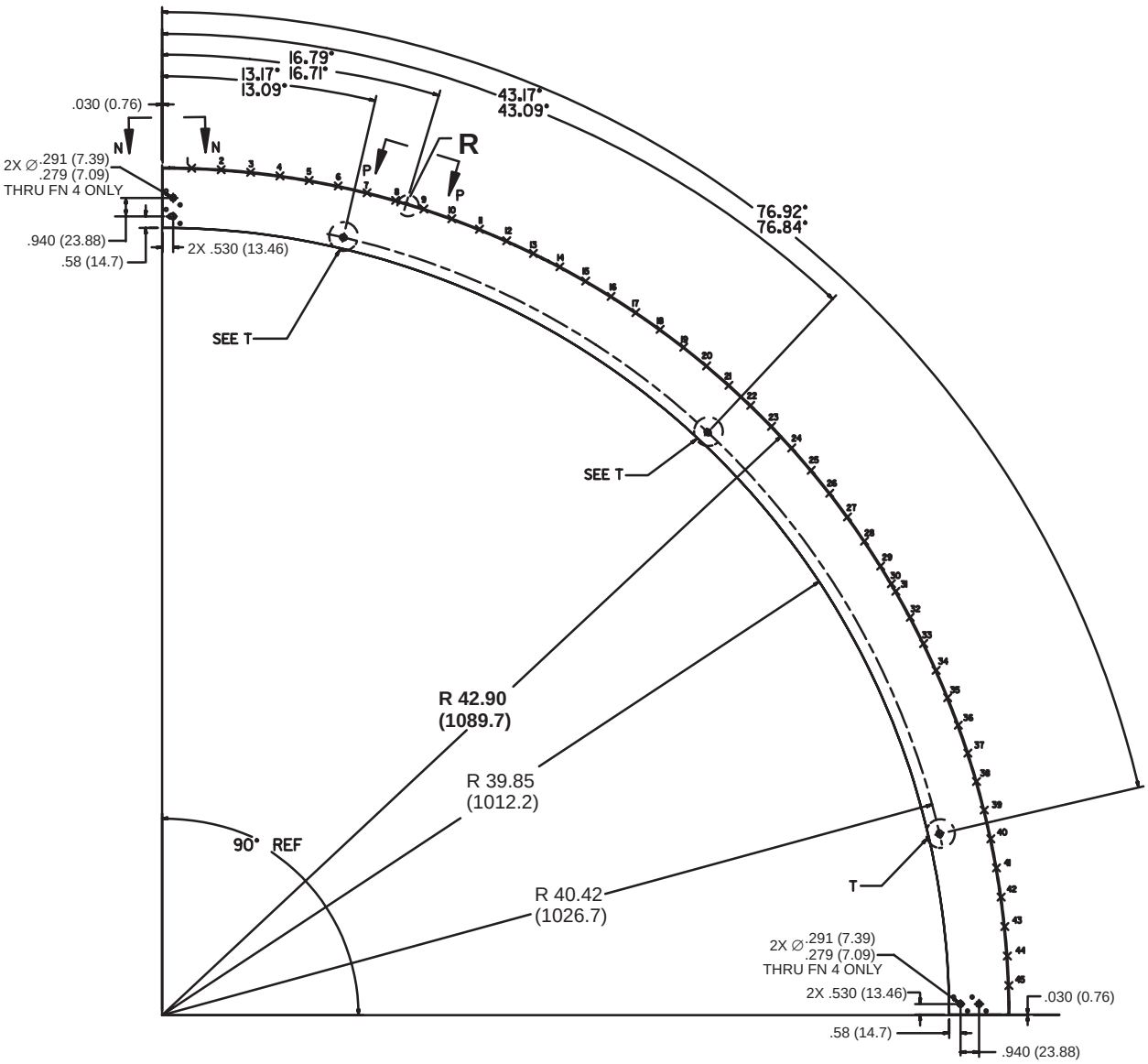

NOTE: Views T, N−N, P−P, and R on Sheet 9.

FIGURE 3.3.10−7 PASSIVE CBM SKIRT ATTACH POINTS (SHEET 8 OF 9)

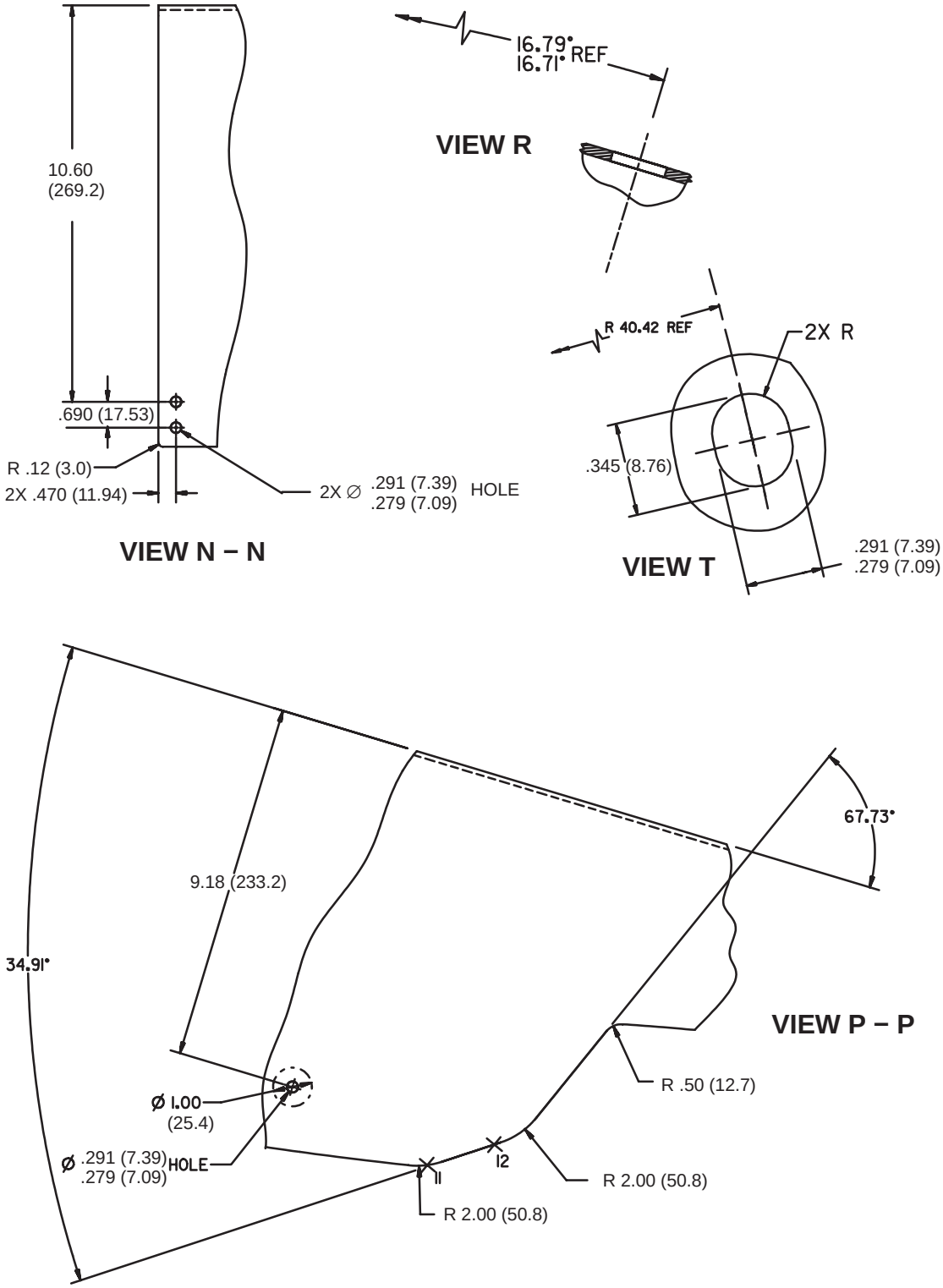

FIGURE 3.3.10−7 PASSIVE CBM SKIRT ATTACH POINTS (SHEET 9 OF 9)

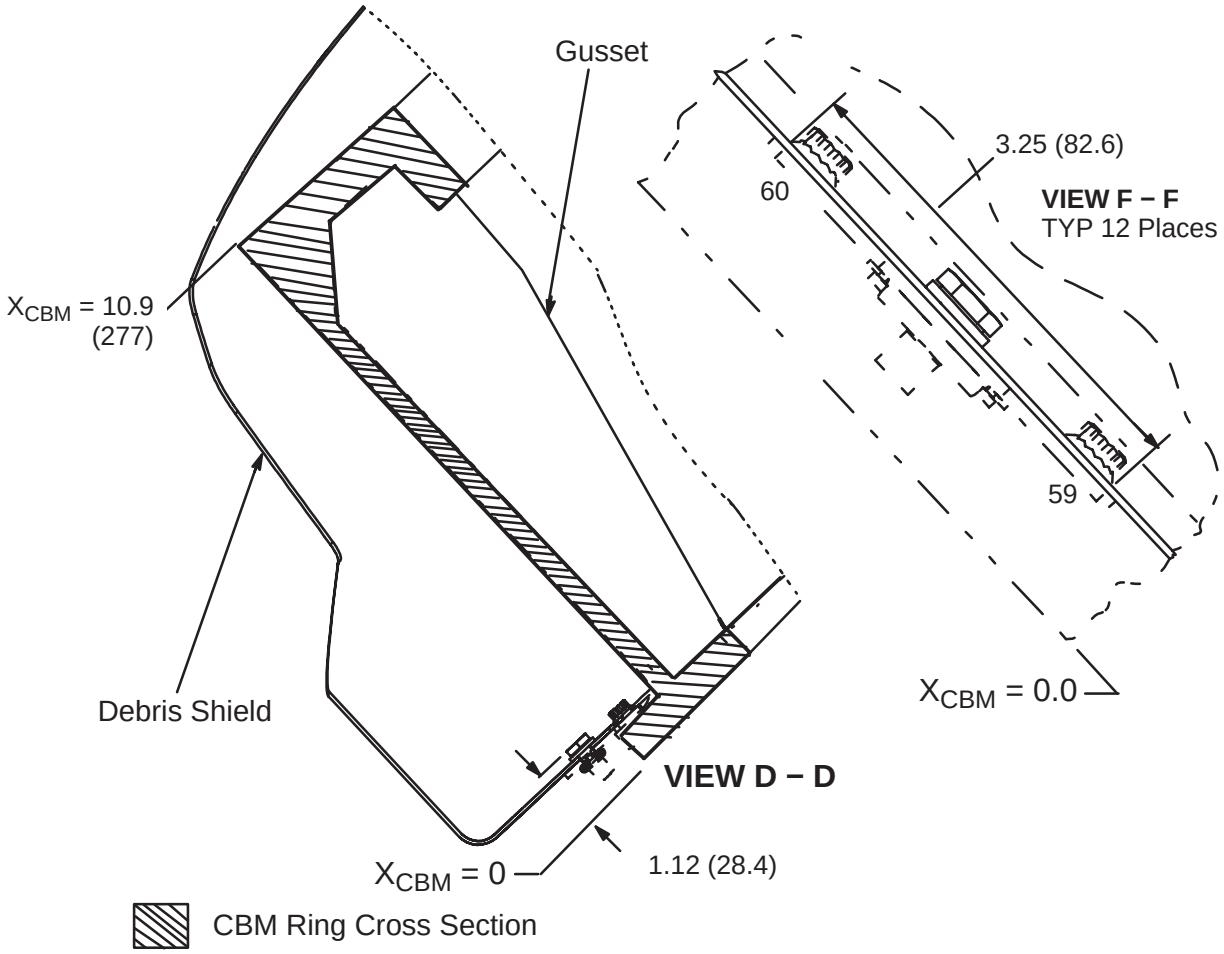

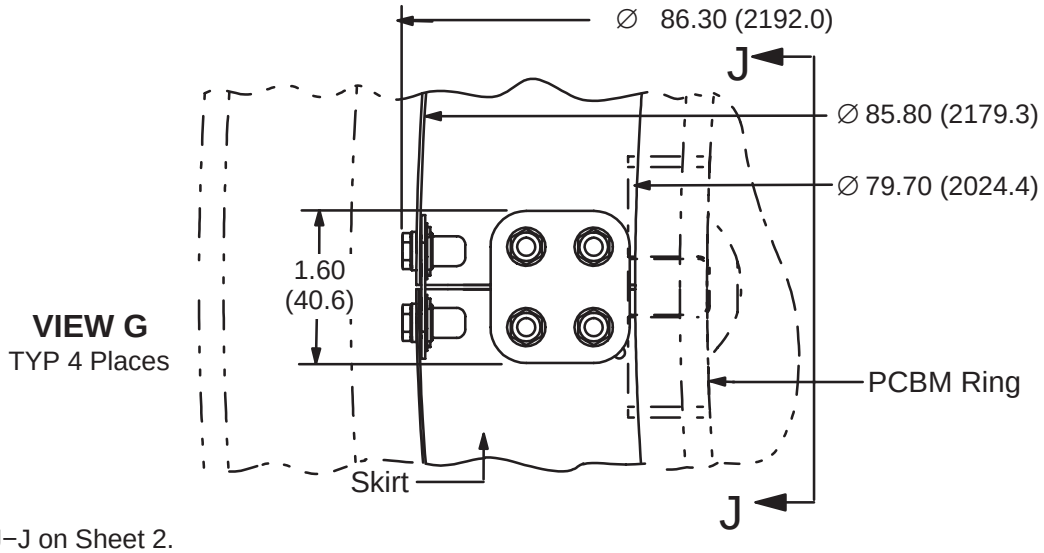

NOTE: View J−J on Sheet 2.

FIGURE 3.3.10−8 PCBM SKIRT SUPPORT DETAILS (SHEET 1 OF 8)

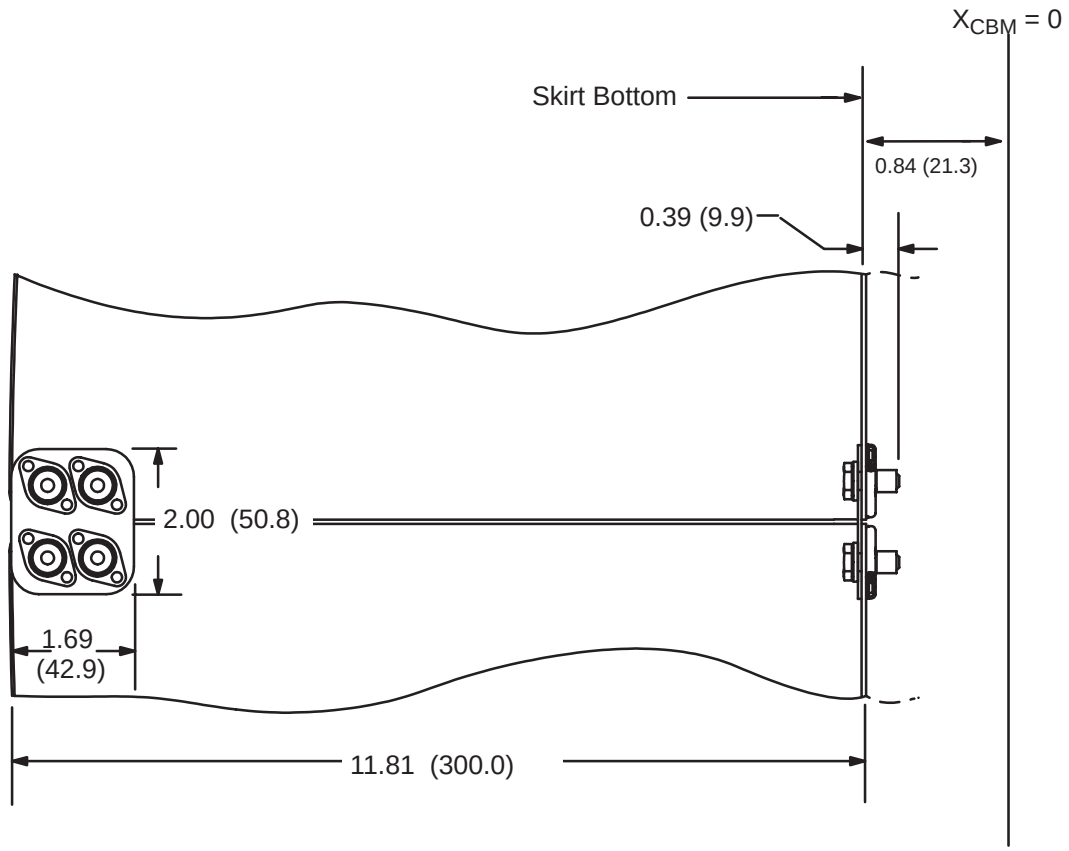

VIEW J − J

FIGURE 3.3.10−8 PCBM SKIRT SUPPORT DETAILS (SHEET 2 OF 8)

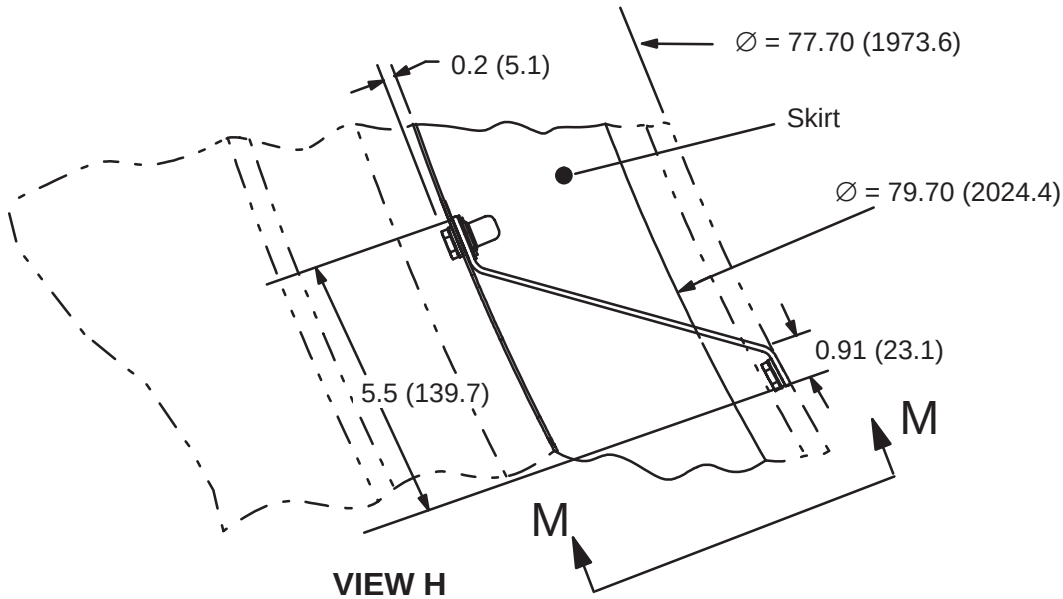

VIEW H
(see Note 1)
TYP 2 Places

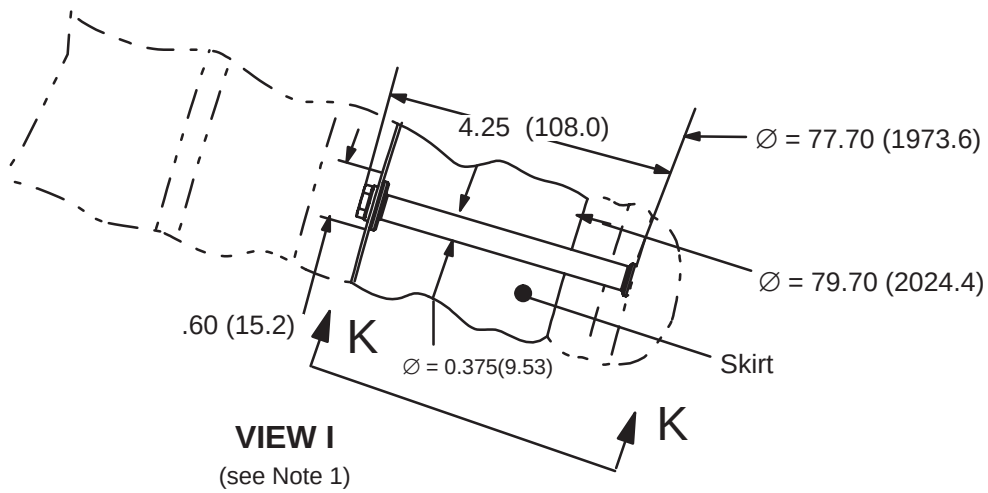

VIEW I
(see Note 1)
TYP 4 Places

NOTE 1: These skirt supports utilize the tooling holes on the PCBM Ring. Remaining tooling holes are available for MLI.

X locations for tooling holes are on Figure 3.3.7.1−2.

NOTE 2: View K−K on Sheet 5. View M−M on Sheet 4.

FIGURE 3.3.10−8 PCBM SKIRT SUPPORT DETAILS (SHEET 3 OF 8)

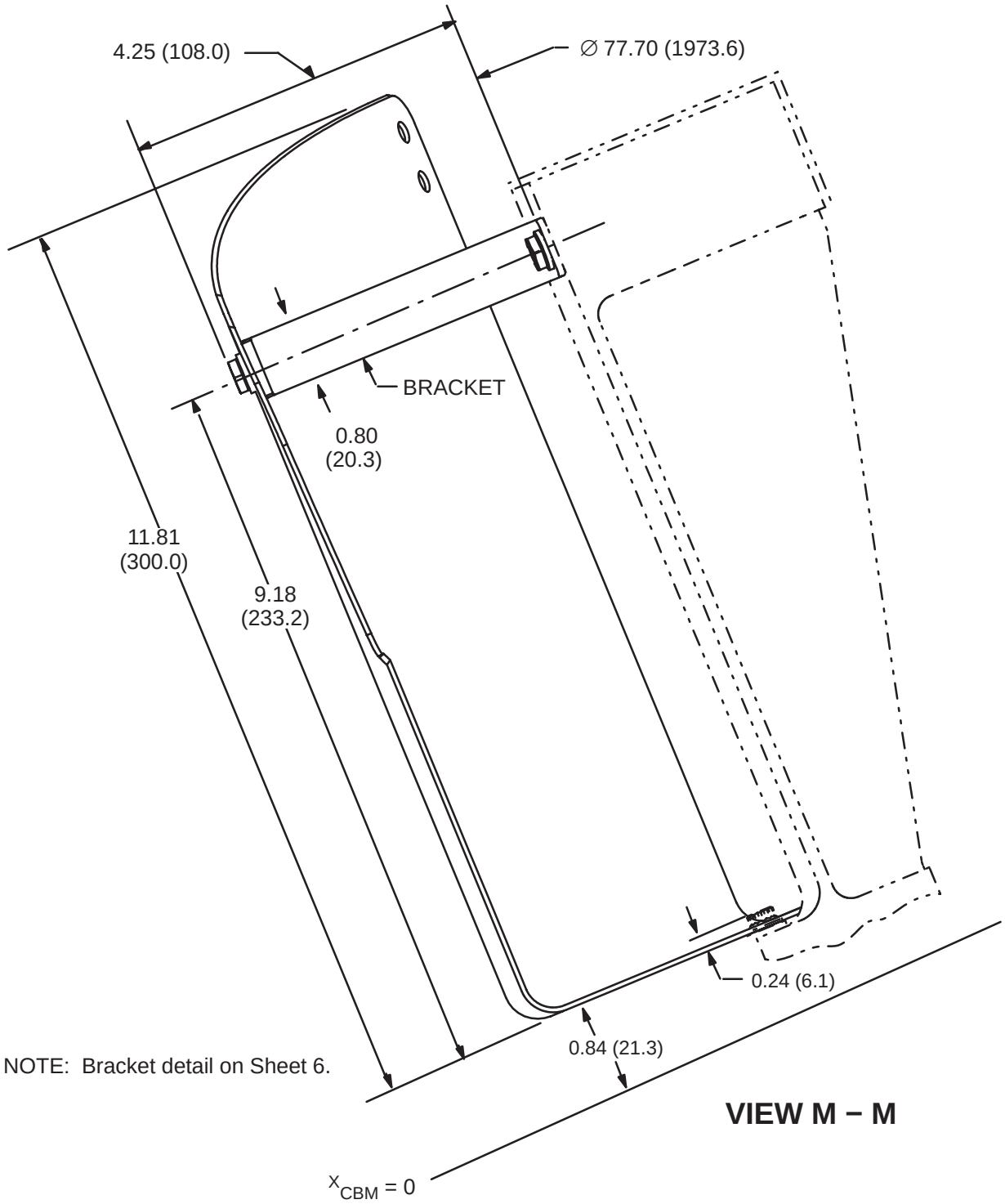

NOTE: Bracket detail on Sheet 6.

FIGURE 3.3.10−8 PCBM SKIRT SUPPORT DETAILS (SHEET 4 OF 8)

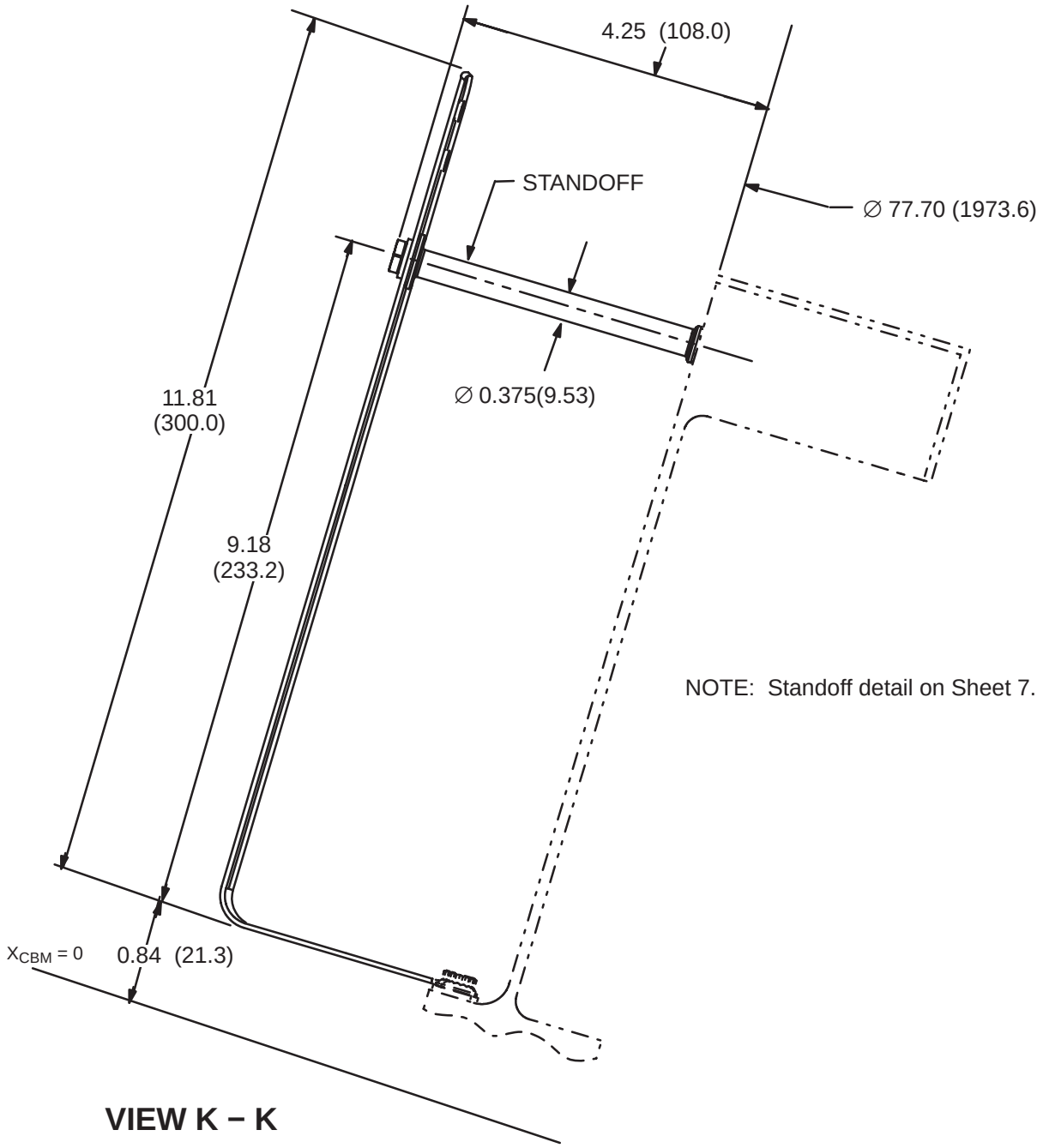

FIGURE 3.3.10−8 PCBM SKIRT SUPPORT DETAILS (SHEET 5 OF 8)

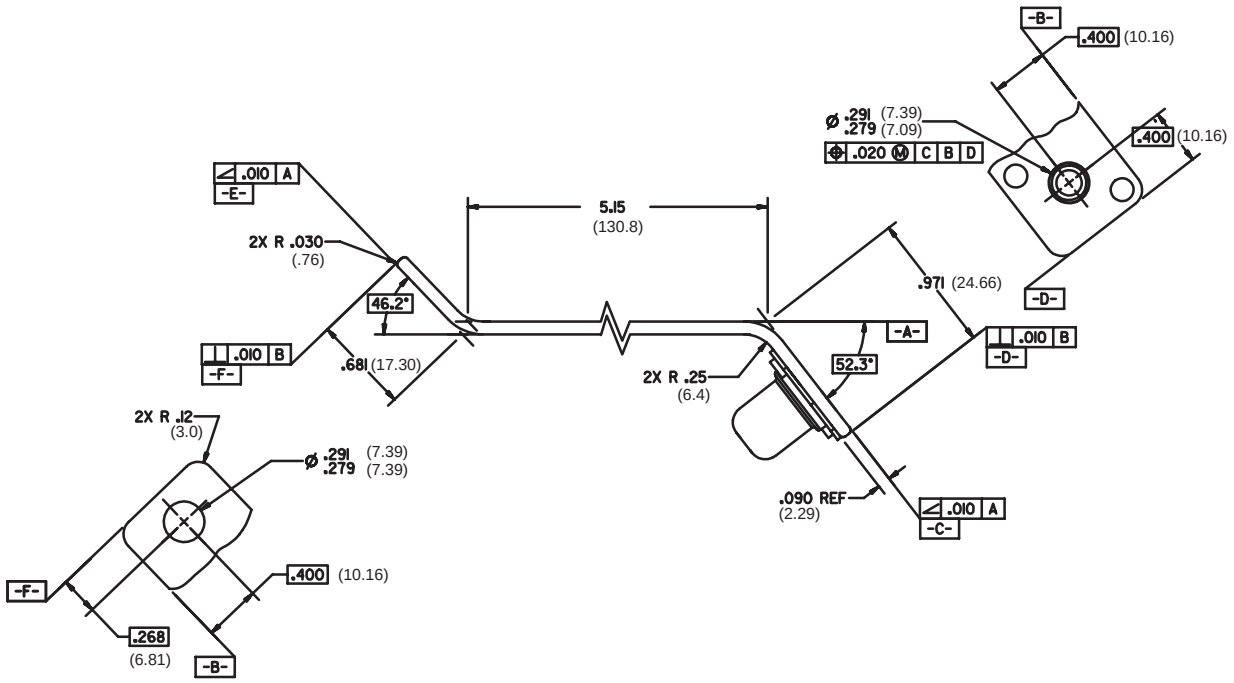

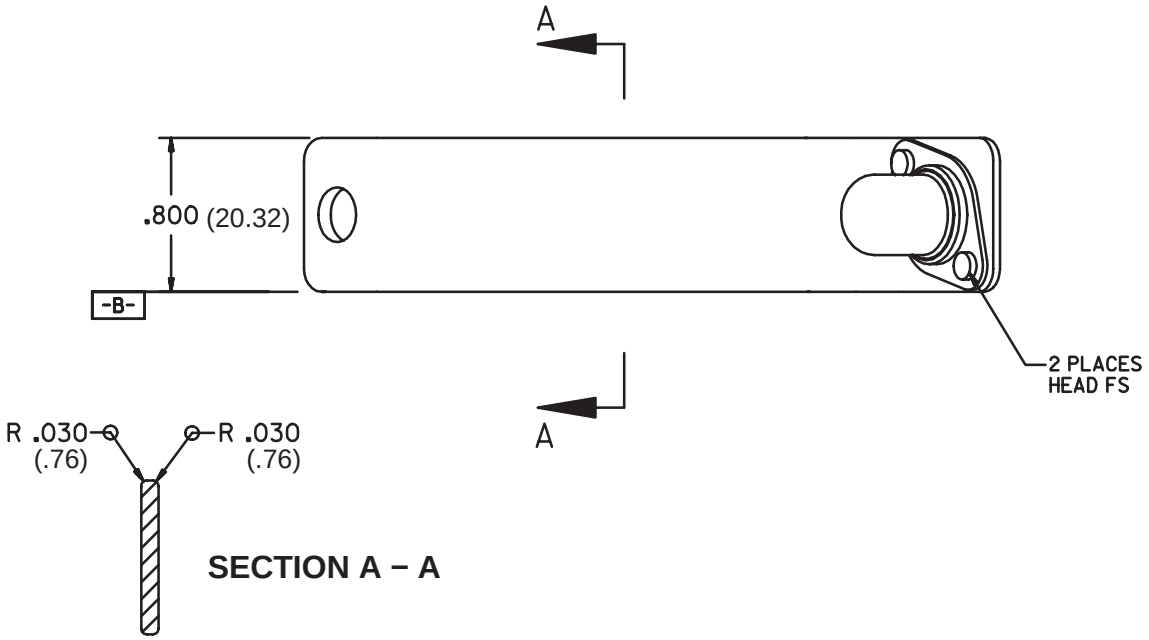

FIGURE 3.3.10−8 PCBM SKIRT SUPPORT DETAILS (SHEET 6 OF 8)

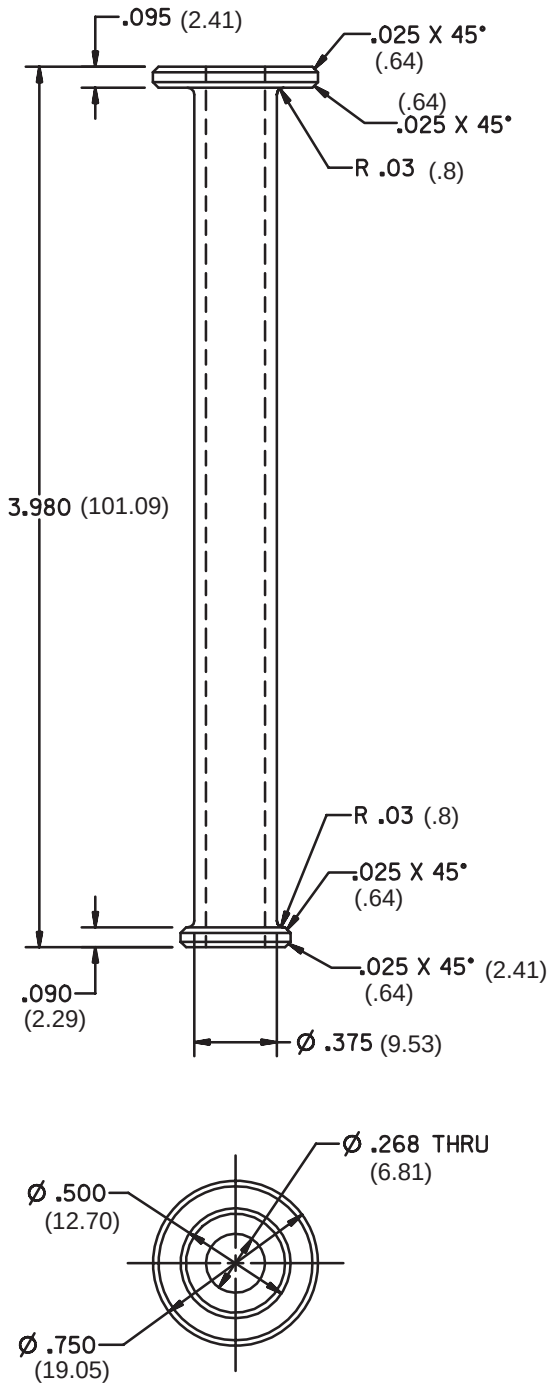

FIGURE 3.3.10−8 PCBM SKIRT SUPPORT DETAILS (SHEET 7 OF 8)

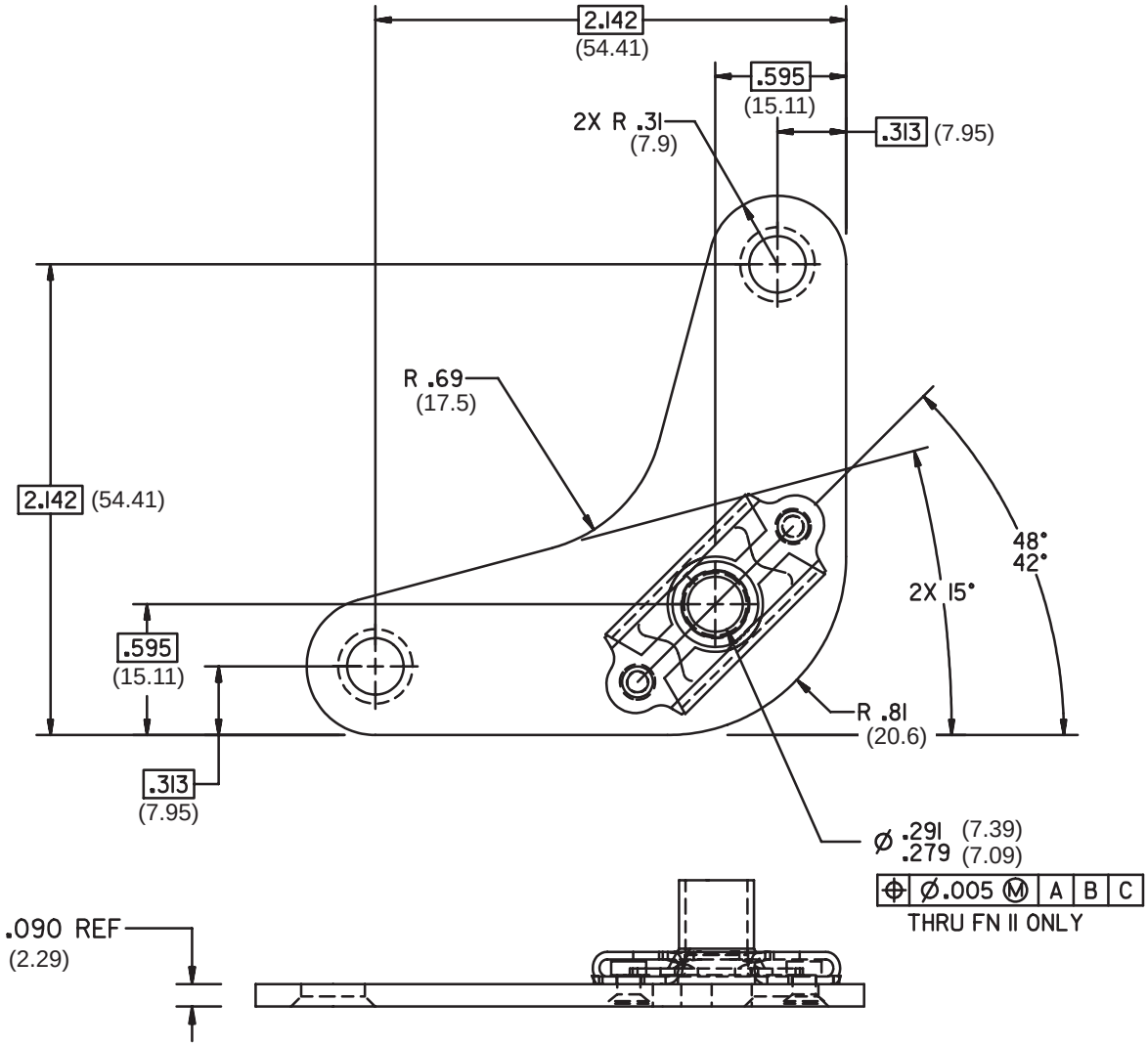

VIEW J

FIGURE 3.3.10−8 PCBM SKIRT SUPPORT DETAILS (SHEET 8 OF 8)

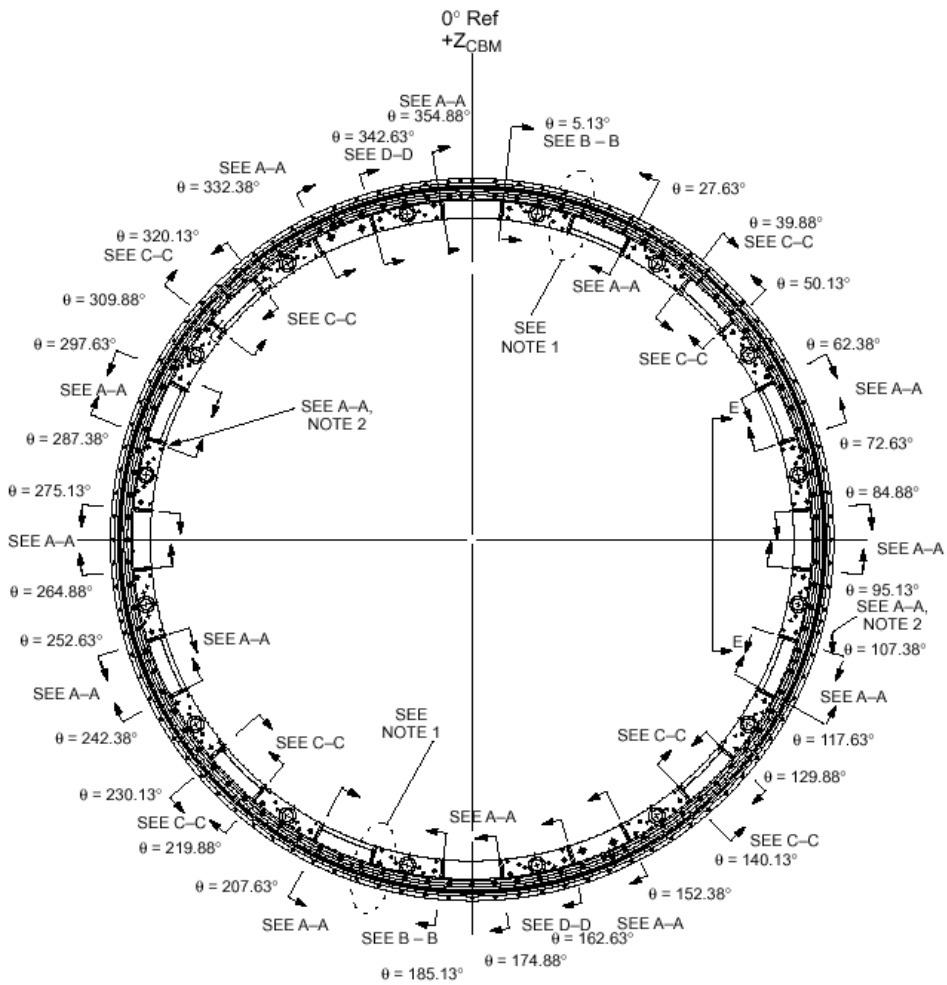

NOTE 1: Gusset not available for Hook/Loop or bracket attachment, except for Cupola PCBM (see Figure 3.3.12−1).
NOTE 2: Gusset not available for Hook/Loop or bracket attachment for PMA−2 and PMA−3, except for Cupola PCBM (see Figure 3.3.12−1).

FIGURE 3.3.10−9 PCBM PASSIVE THERMAL ATTACH LOCATIONS−INTERNAL

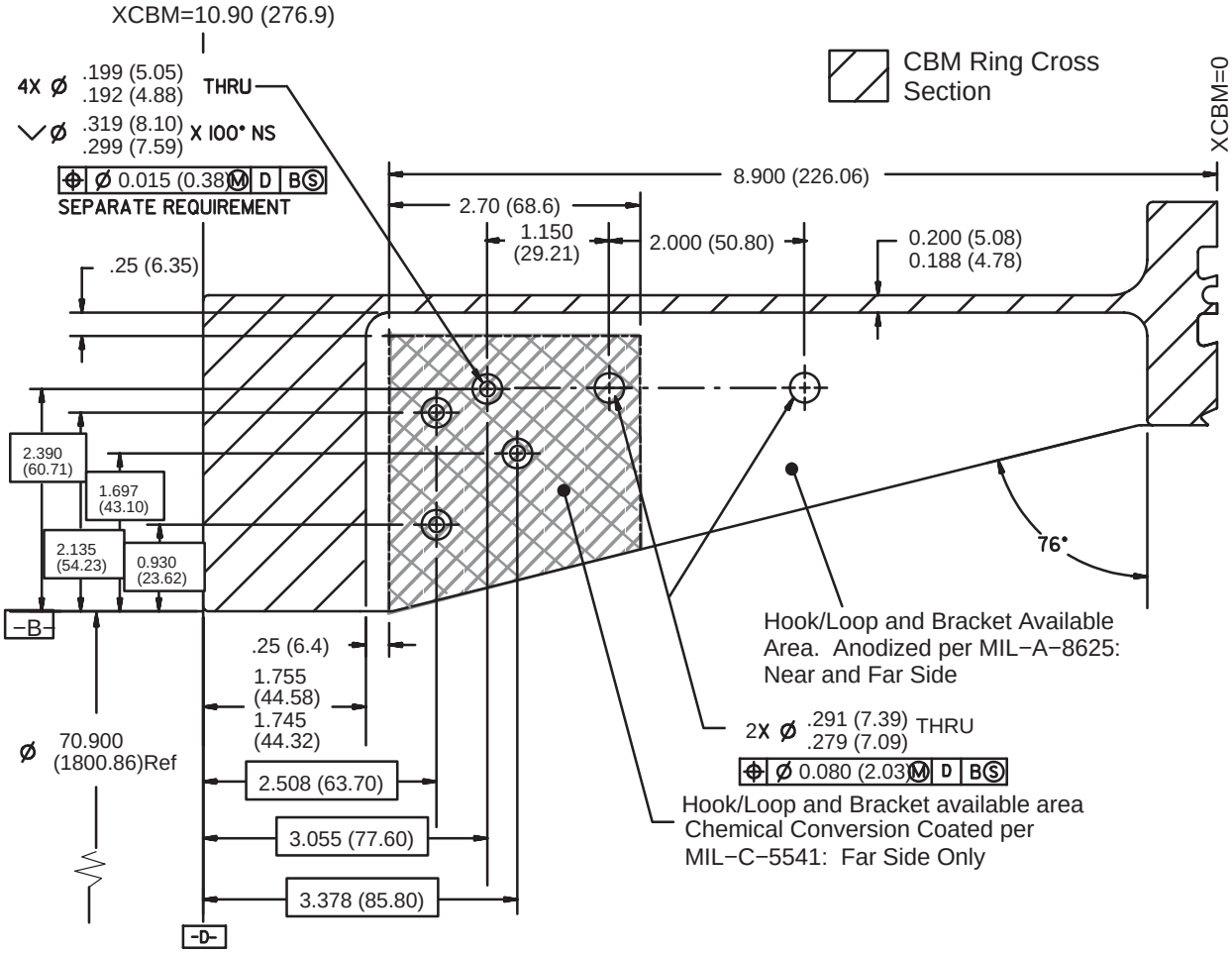

SECTION A − A
TYP 18 Places

NOTE: 1) Surface finish anodization can be locally removed in the available hook/loop area for MLI attachment fasteners. The removal of the surface finish shall be in accordance with International Partners or Boeing approved standard PMP processes. Touch up finish using chemical conversion coating on any remaining bare aluminum is required.

FIGURE 3.3.10−10 PCBM PASSIVE THERMAL AND GROUNDING AVAILABLE HOLE ATTACH LOCATIONS−INTERNAL (SECTION A−A OF RING GUSSETS) (PAGE 1 OF 2)

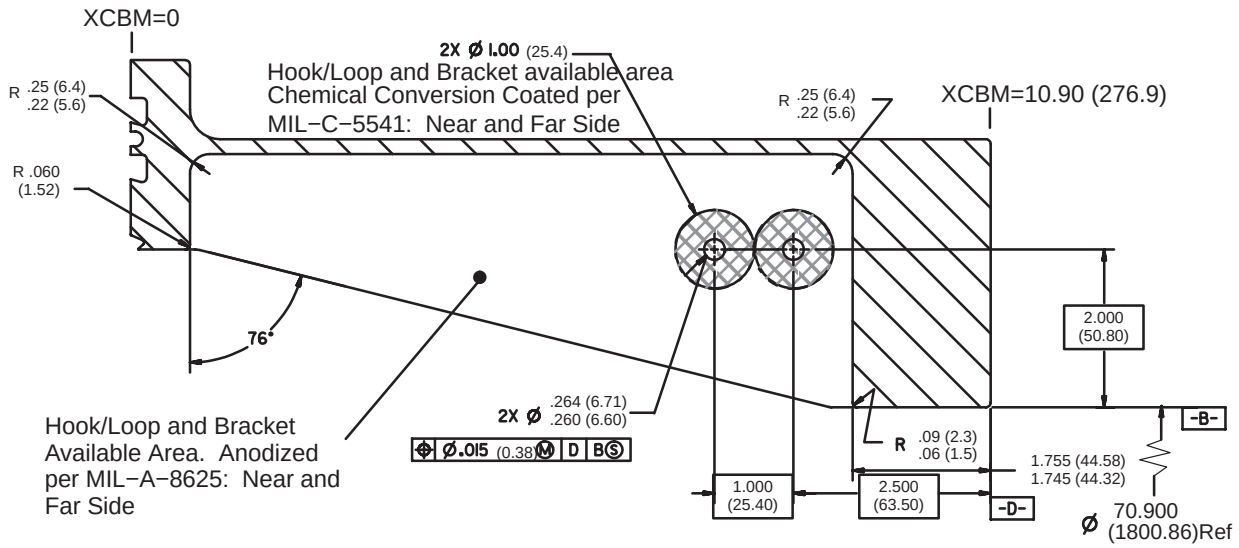

SECTION B − B

TYP 2 Places

CBM Ring Cross Section

NOTE: 1) Surface finish anodization can be locally removed in the available hook/loop area for MLI attachment fasteners. The removal of the surface finish shall be in accordance with International Partners or Boeing approved standard PMP processes. Touch up finish using chemical conversion coating on any remaining bare aluminum is required.

FIGURE 3.3.10−10 PCBM PASSIVE THERMAL AND GROUNDING AVAILABLE HOLE ATTACH LOCATIONS−INTERNAL (SECTION A−A OF RING GUSSETS) (PAGE 2 OF 2)

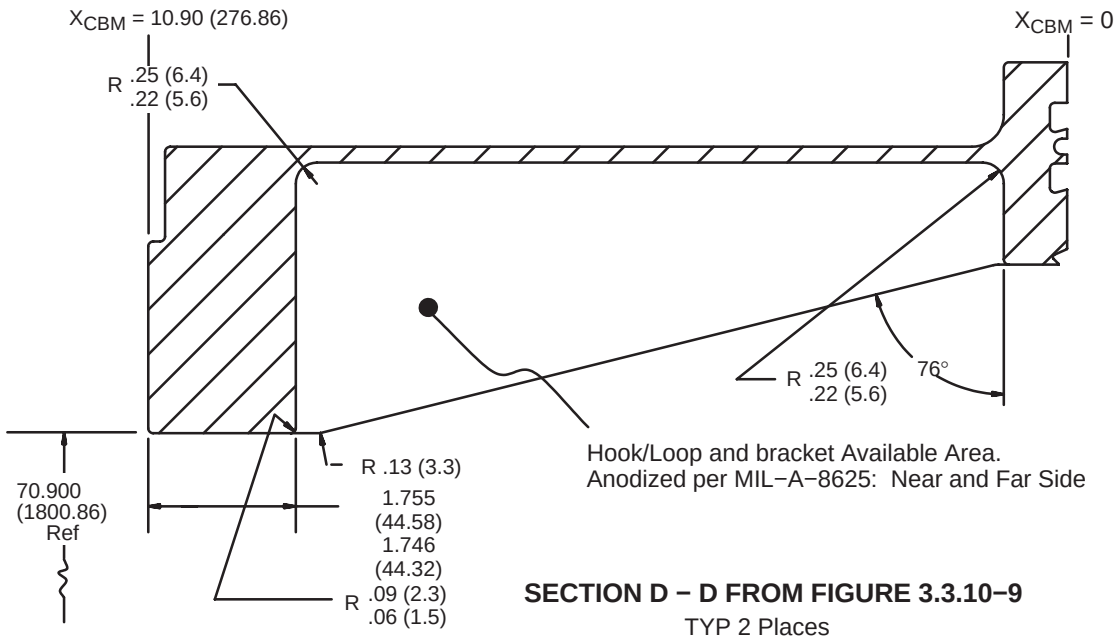

SECTION D − D FROM FIGURE 3.3.10−9

TYP 2 Places

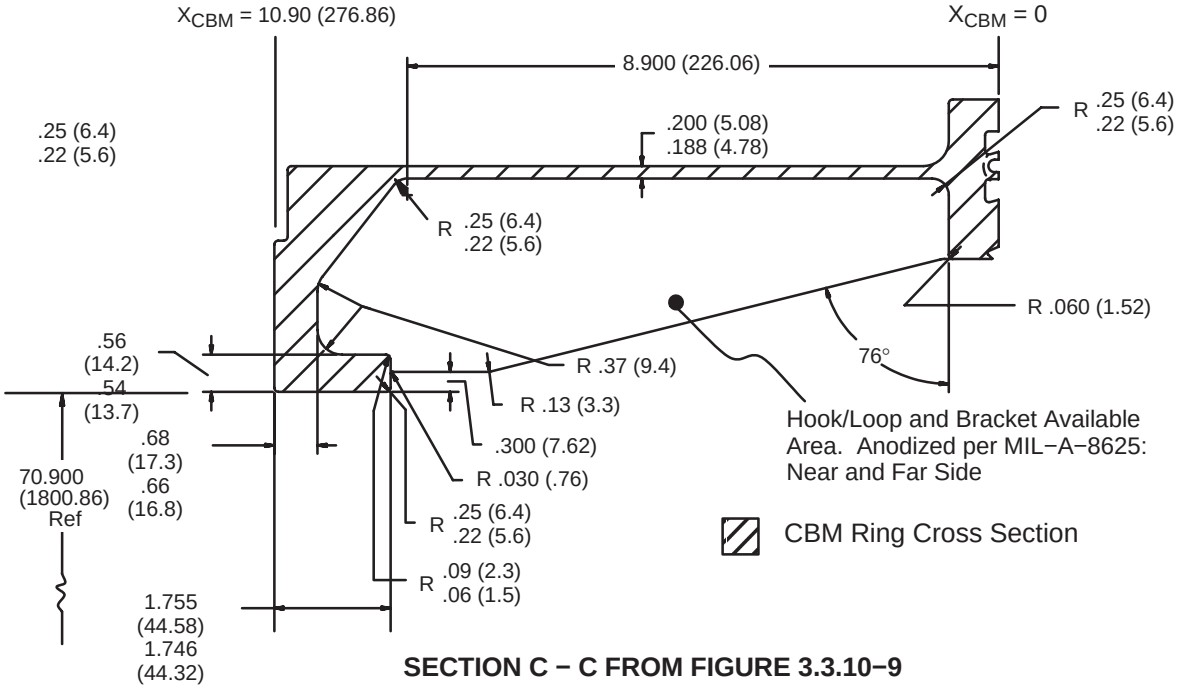

SECTION C − C FROM FIGURE 3.3.10−9

TYP 8 Places

NOTE: 1) Surface finish anodization can be locally removed in the available hook/loop area for MLI attachment fasteners. The removal of the surface finish shall be in accordance with International Partners or Boeing approved standard PMP processes. Touch up finish using chemical conversion coating on any remaining bare aluminum is required.

FIGURE 3.3.10−11 PCBM GUSSET DETAILS − INTERNAL

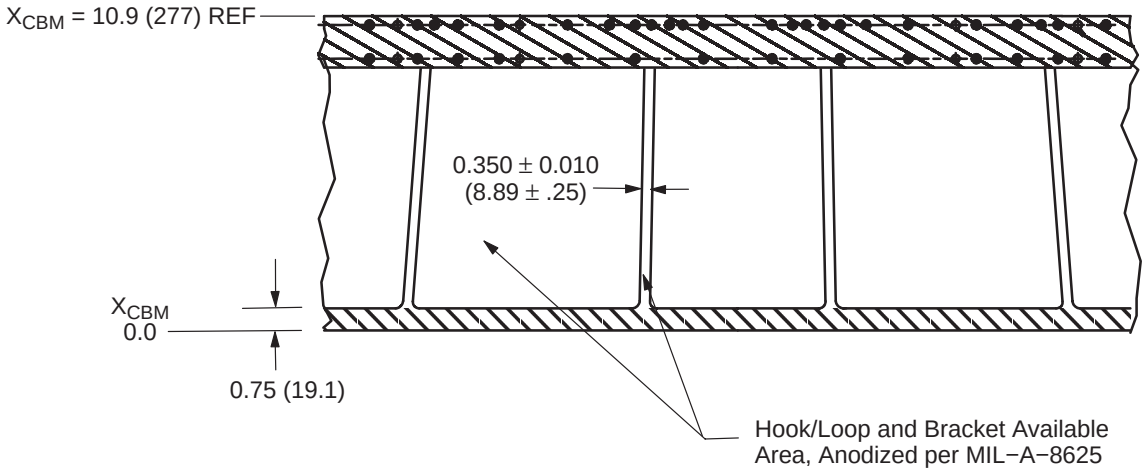

VIEW E − E

Hook/Loop Stayout

NOTES:

1) Applicable for entire internal circumference. MLI must stay clear of CBM hardware when installed and during berthing/deberthing operations.
2) Surface finish anodization can be locally removed in the available hook/loop area for MLI attachment fasteners. The removal of the surface finish shall be in accordance with International Partners or Boeing approved standard PMP processes. Touch up finish using chemical conversion coating on any remaining bare aluminum is required.

FIGURE 3.3.10−12 PCBM AVAILABLE ATTACHMENT AREA − INTERNAL FACE

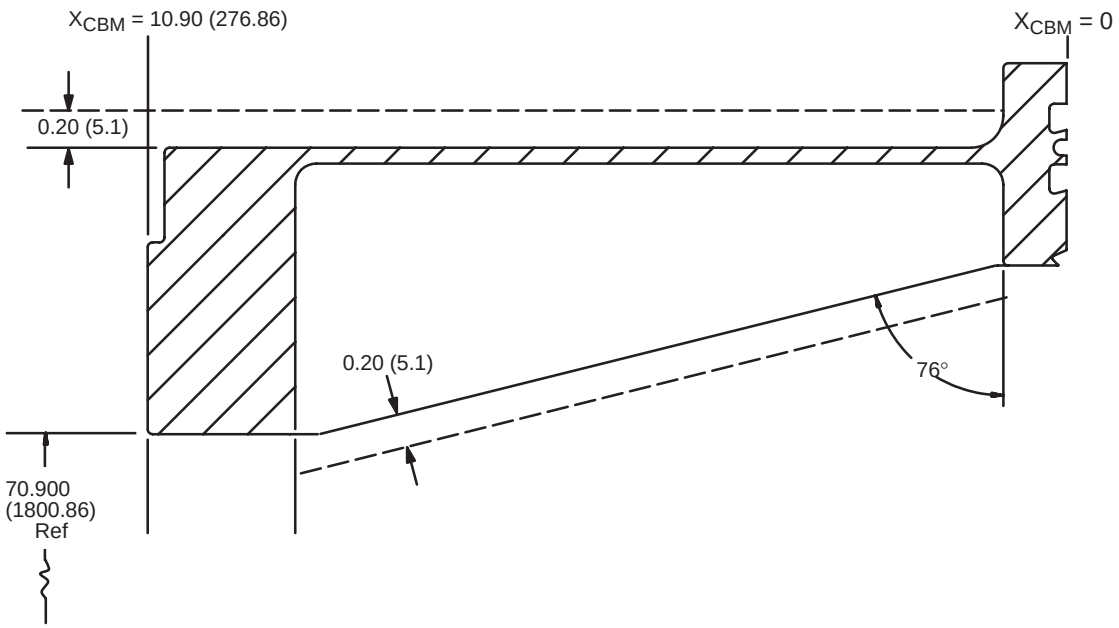

NOTE: Typical Section

FIGURE 3.3.10−13 TYPICAL PCBM ENVELOPES FOR MLI INSTALLATION

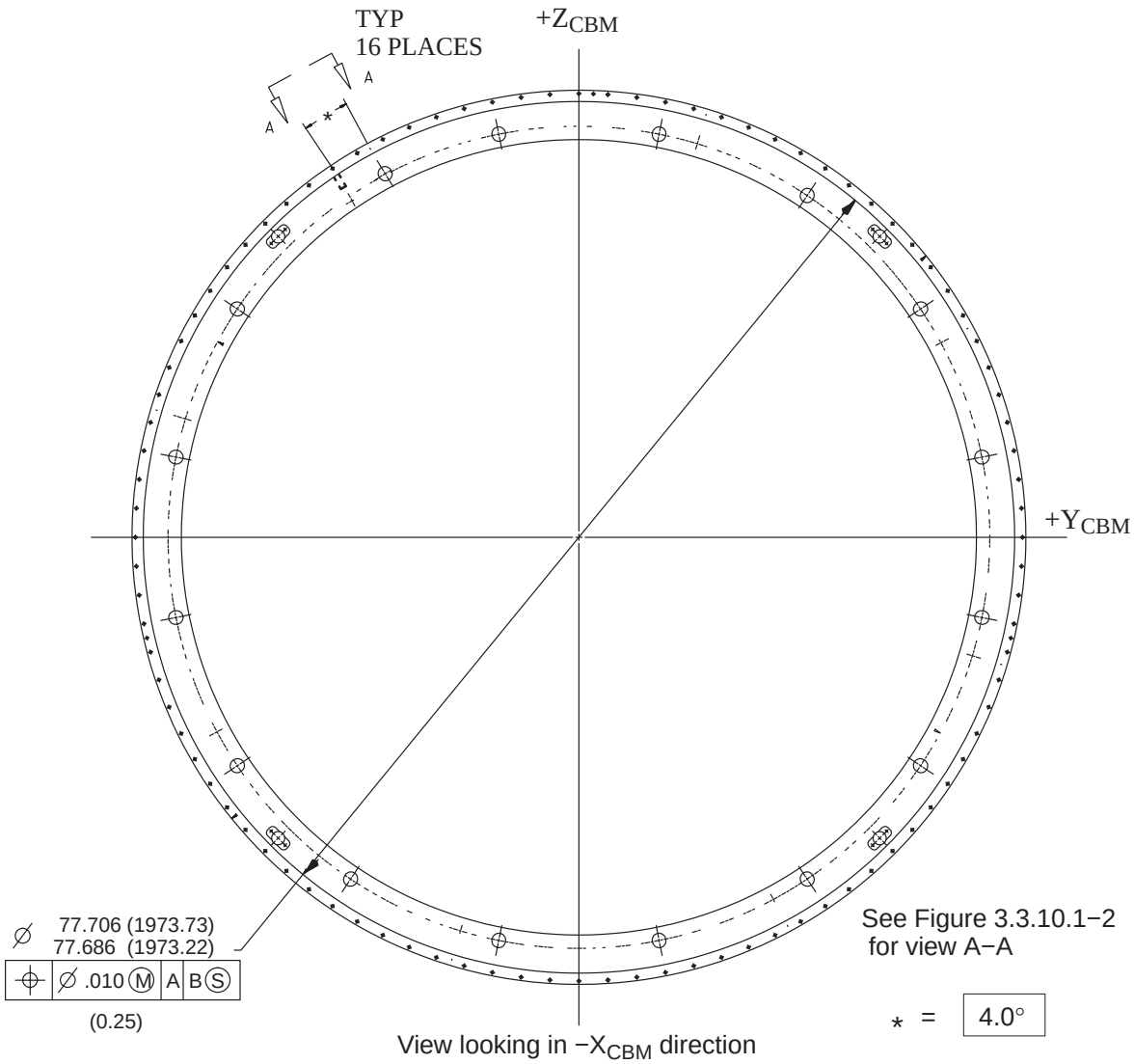

FIGURE 3.3.10.1−1 CLOSE−OUT ATTACHMENT HOLE LOCATIONS FOR ACTIVE AND PASSIVE CBM STRUCTURAL RINGS

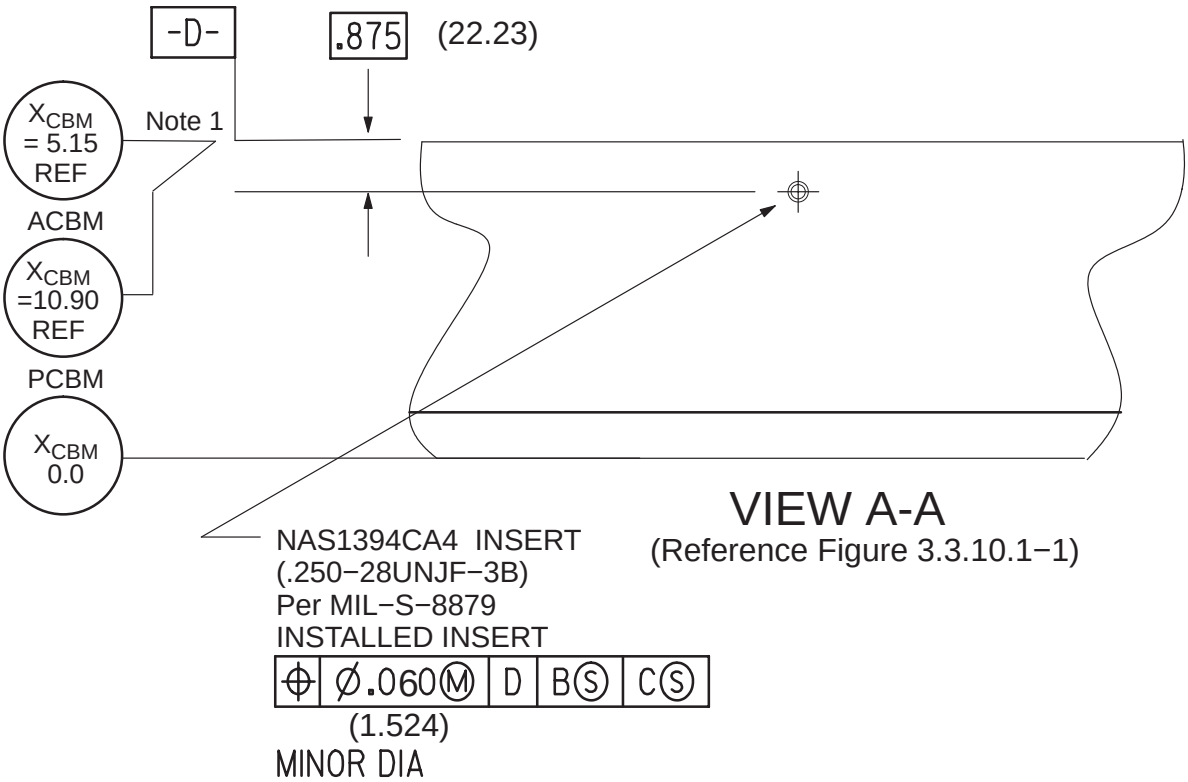

Note: 1) CBM−to−CBM installed interface reference point is 5.15 (130.81) from the X_{CBM}=0.0 position for the ACBM and 11.15 (283.21) for the PCBM.

2) Locations shown can be used as attach point and grounding locations for external ACBM or PCBM passive thermal control systems.

3) Planes B and C are defined in Figures 3.3.2.1−1 and 3.3.2.1−2.

FIGURE 3.3.10.1−2 TYPICAL CLOSE−OUT ATTACHMENT HOLE CONFIGURATION

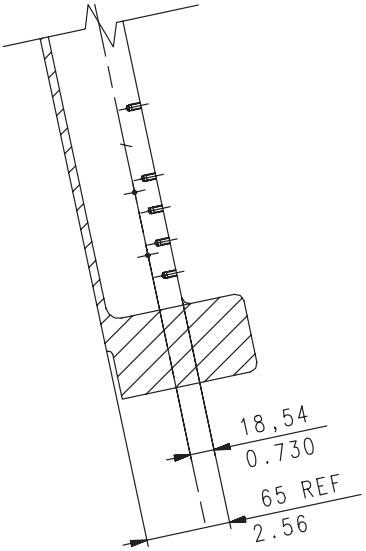

683−13418, Sheet 1, Section J − J

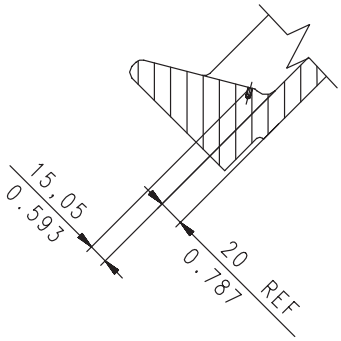

683−13418, Sheet 1, Section H − H

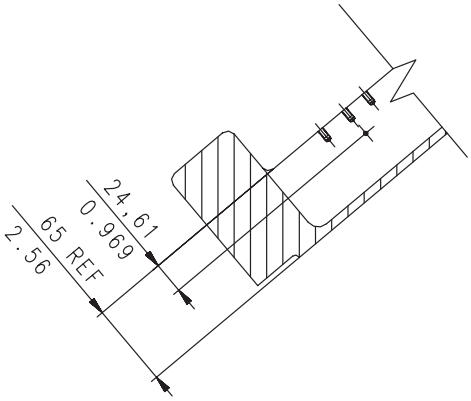

683−13418, Sheet 1, Section G − G

FIGURE 3.3.11−1 DEVIATION FROM DRAWING 683−13418, SHEET FOR NODE 2 AND 3

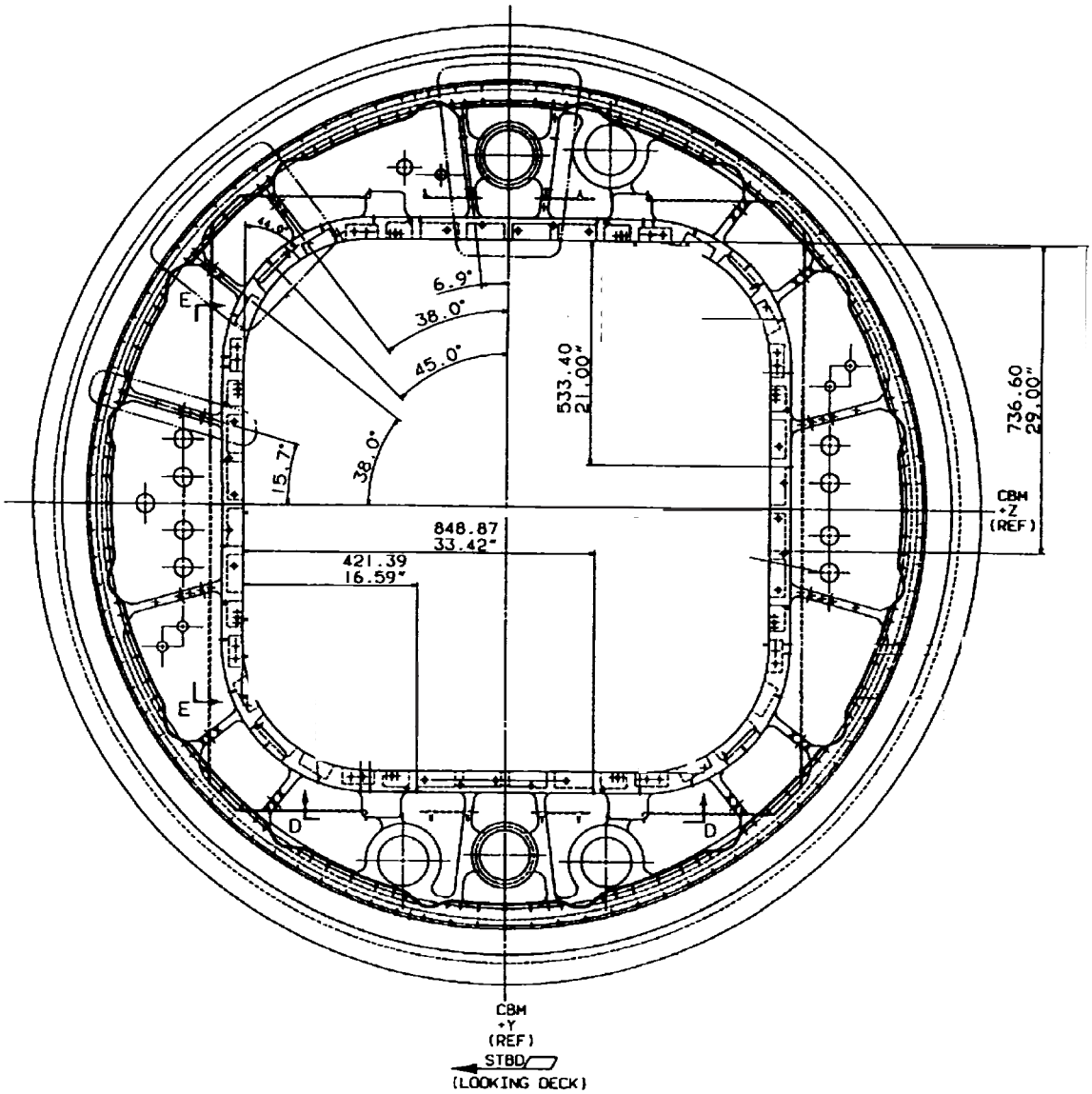

FIGURE 3.3.11−2 (1/3) DEVIATION FROM DRAWING 683−13418, SHEET 2
JEM PM RADIAL PORT

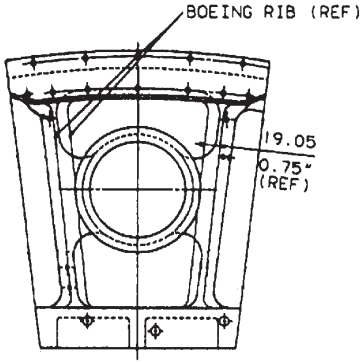

683−13418
Sheet 2
View R

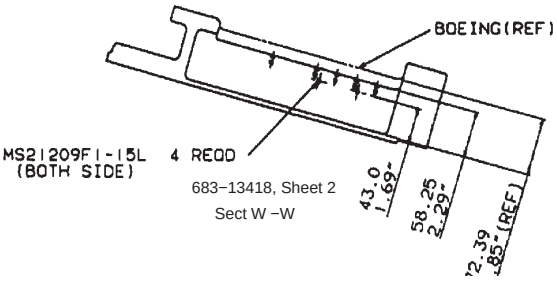

683−13418, Sheet 2
Sect W −W

683−13418, Sheet 2
View R

FIGURE 3.3.11−2 (2/3) DEVIATION FROM DRAWING 683−13418, SHEET 2
JEM PM RADIAL PORT

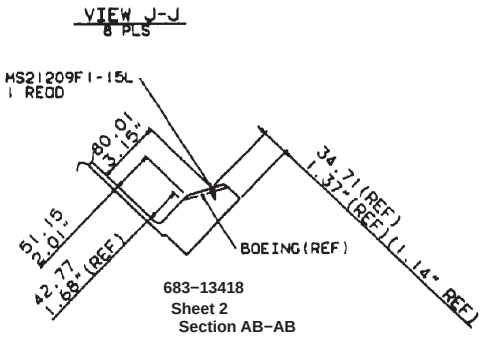

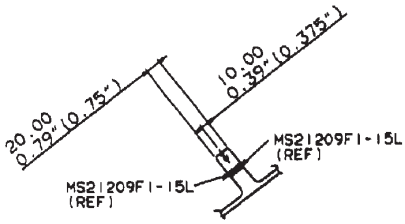

FIGURE 3.3.11−2 (3/3) DEVIATION FROM DRAWING 683−13418, SHEET 2
JEM PM RADIAL PORT

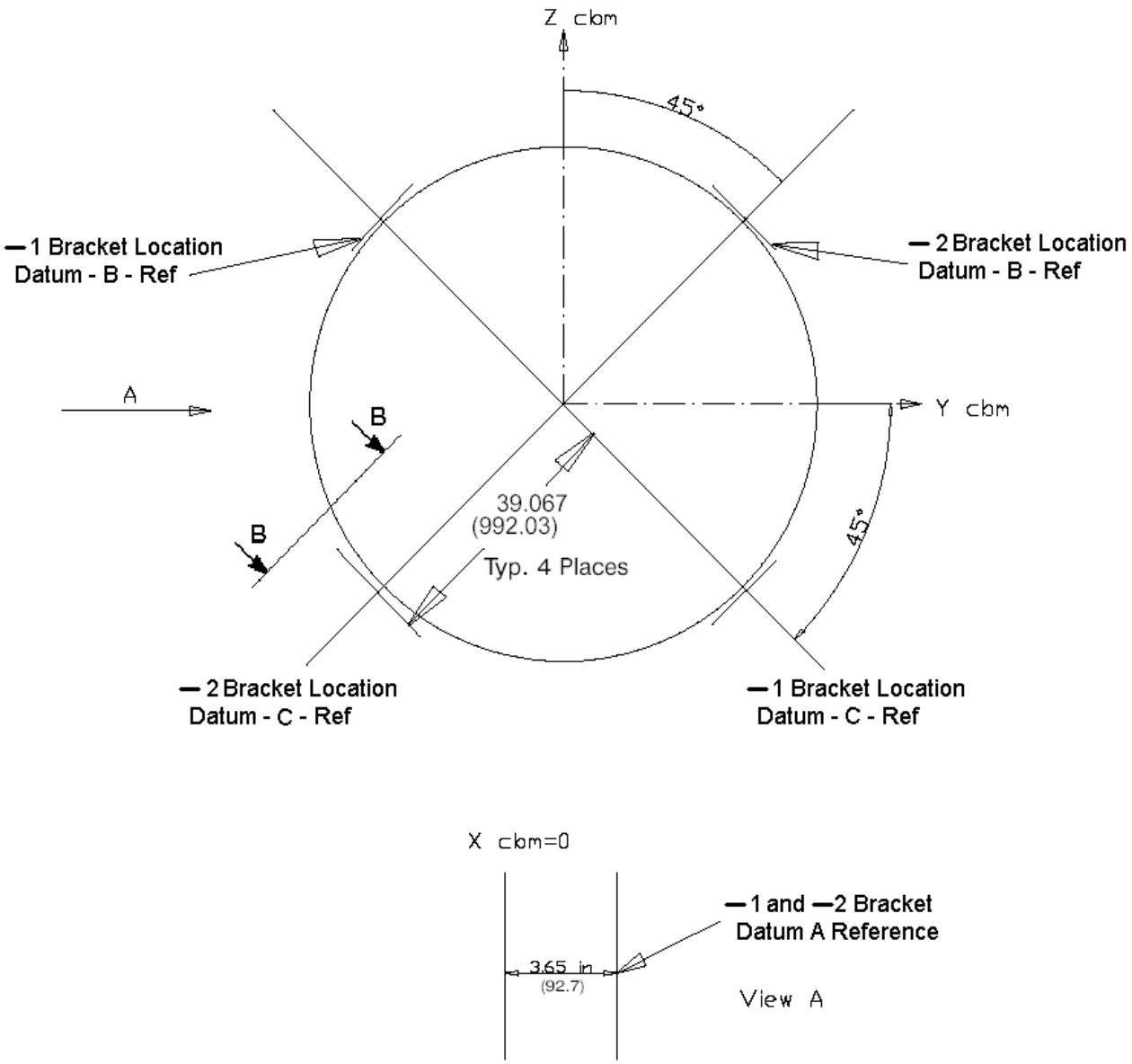

FIGURE 3.3.12−1 M/OD BRACKET LOCATIONS

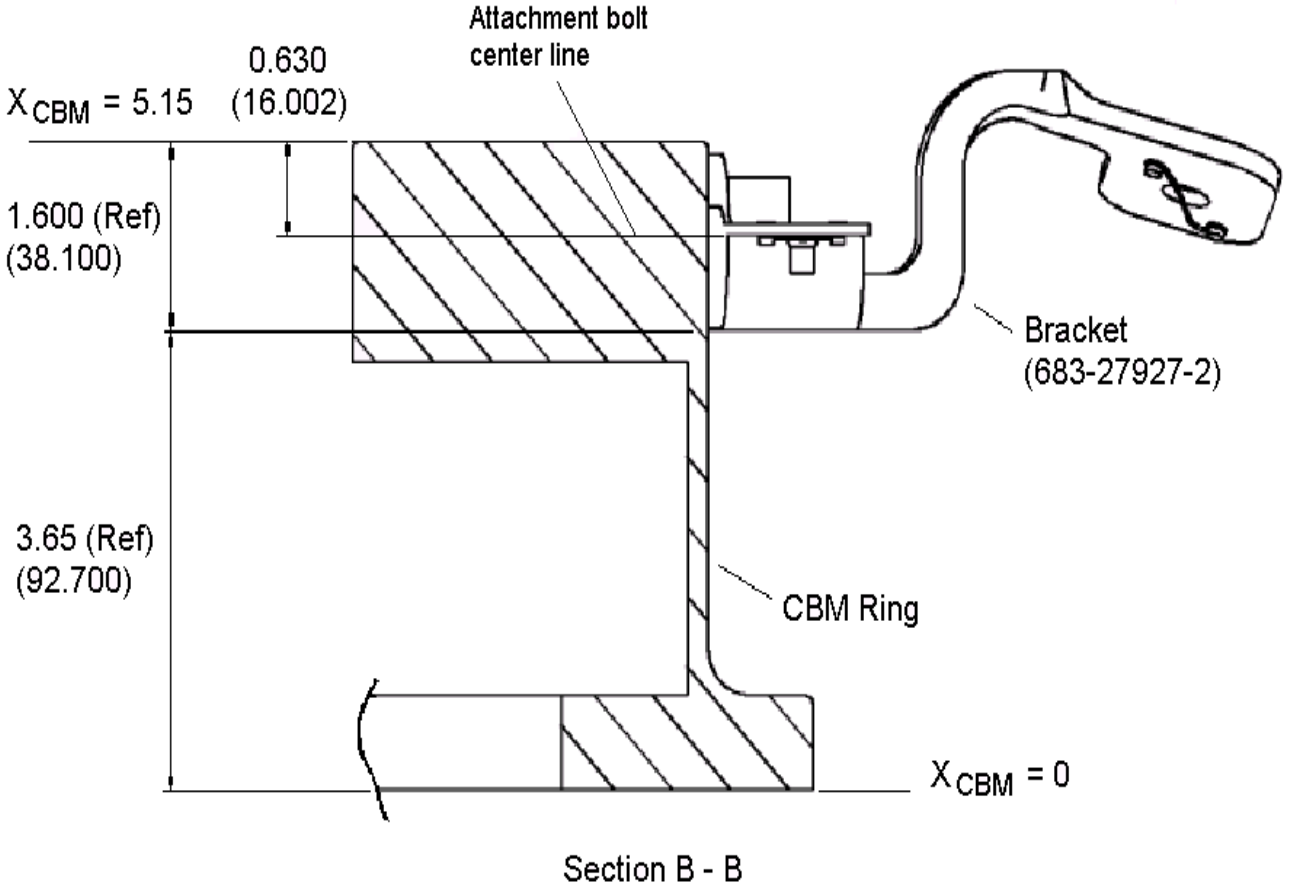

FIGURE 3.3.12−2 M/OD BRACKET DETAIL

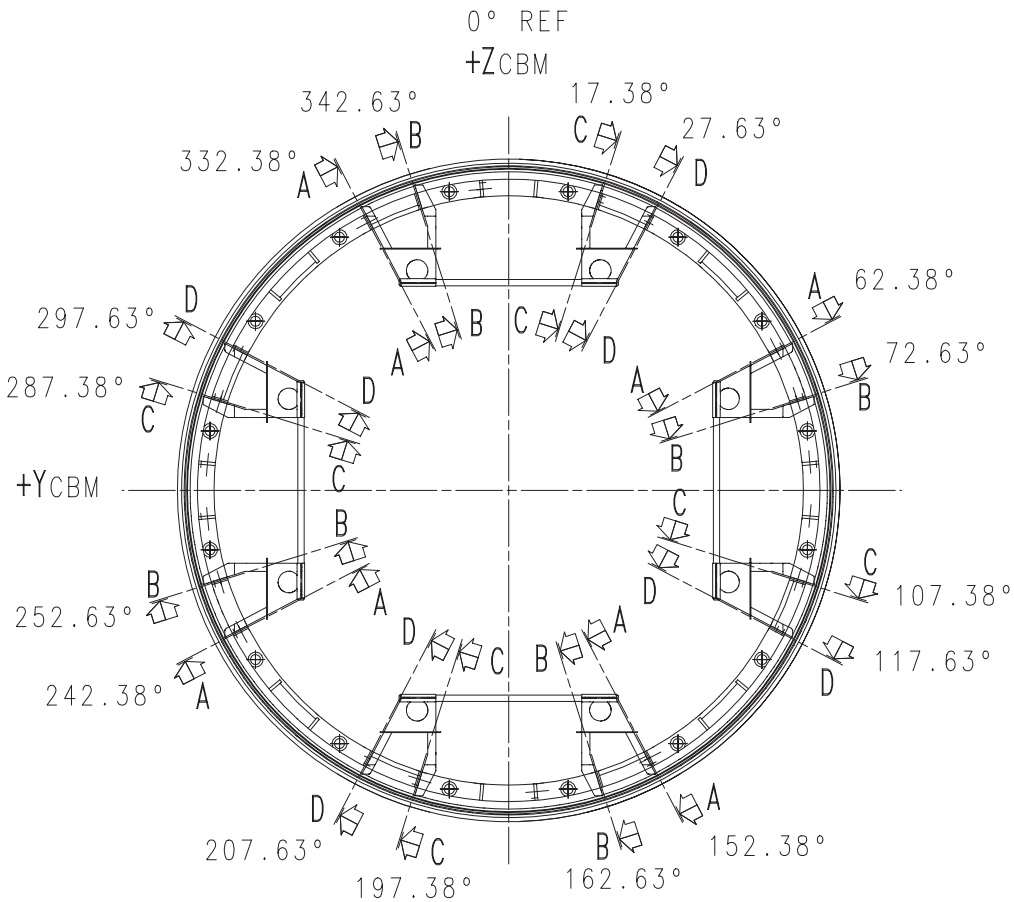

SECTION A–A (SEE FIGURE 3.3.12–2)
SECTION B–B (SEE FIGURE 3.3.12–3)
SECTION C–C (SEE FIGURE 3.3.12–4)
SECTION D–D (SEE FIGURE 3.3.12–5)

FIGURE 3.3.13–1 PCBM TO CUPOLA SECONDARY STRUCTURE INTERFACES

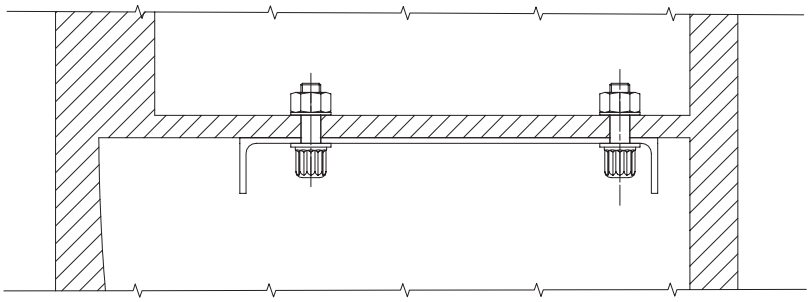

SECTION E-E

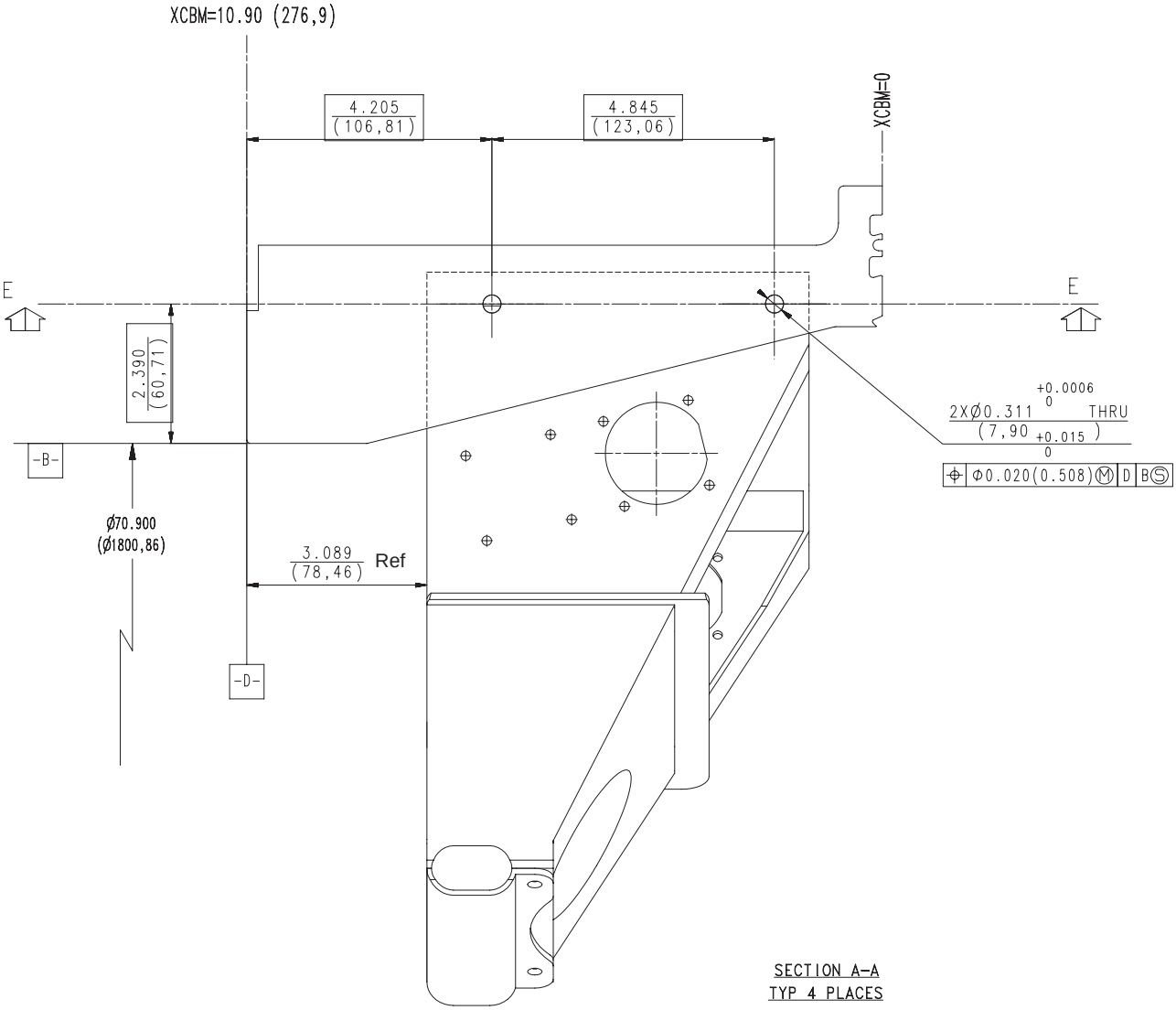

Note: 1) Surface finish anodization can be locally removed for establishing electrical bond at assembly. The removal of the surface finish shall be in accordance with International partners or Boeing approved standard PMP processes. Touch−up finish using chemical conversion coating on any remaining bare aluminium is required.

FIGURE 3.3.13−2 PCBM TO CUPOLA SECONDARY STRUCTURE INTERFACES, BRACKET GEOMETRY AND FASTENER ORIENTATION

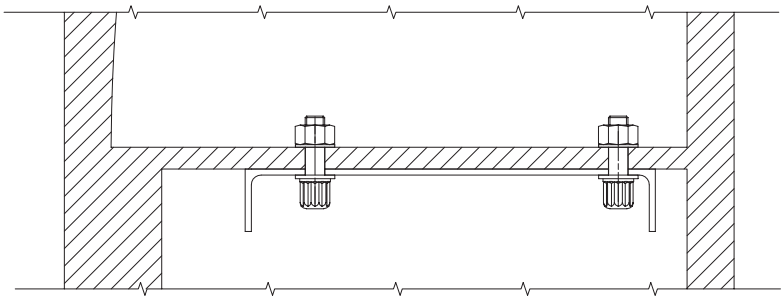

SECTION F–F

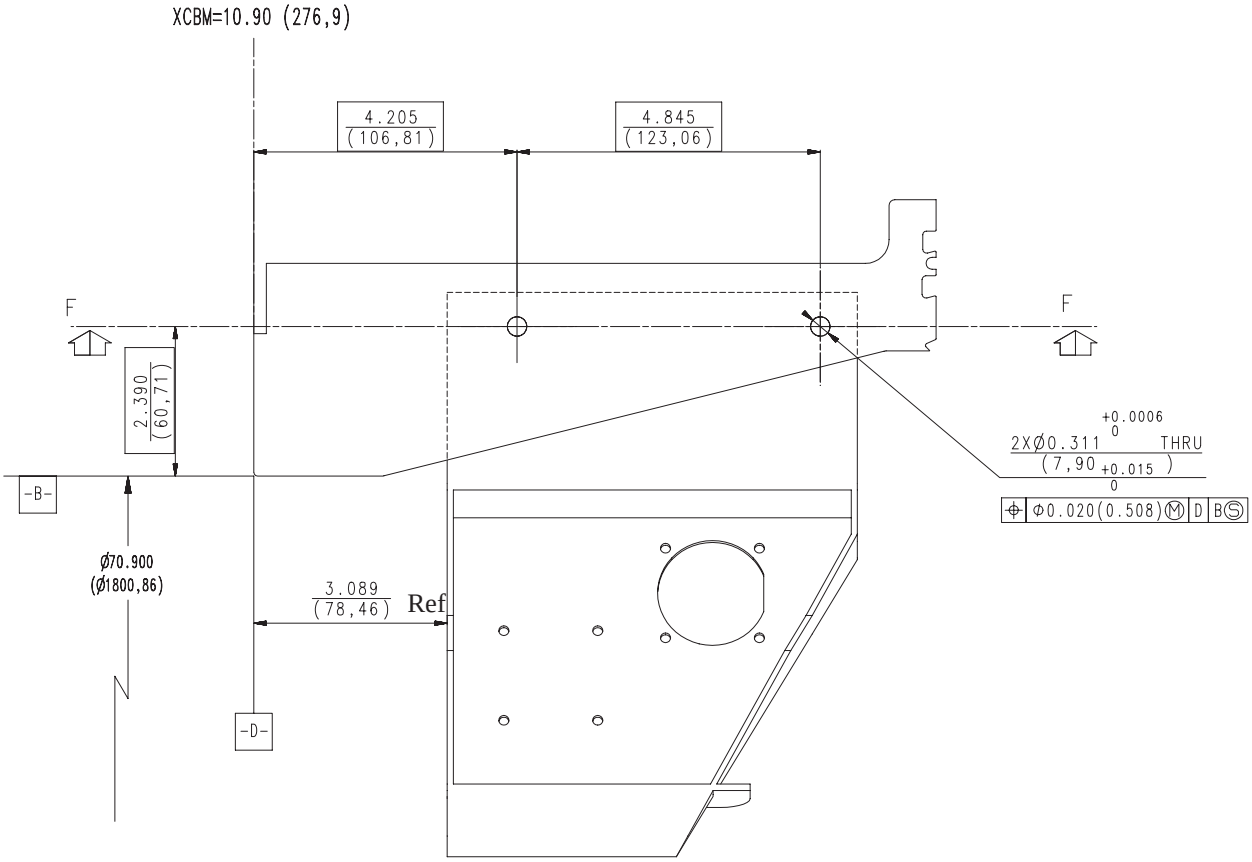

SECTION B–B
TYP 4 PLACES

Note: 1) Surface finish anodization can be locally removed for establishing electrical bond at assembly. The removal of the surface finish shall be in accordance with International partners or Boeing approved standard PMP processes. Touch−up finish using chemical conversion coating on any remaining bare aluminium is required.

FIGURE 3.3.13−3 PCBM TO CUPOLA SECONDARY STRUCTURE INTERFACES, BRACKET GEOMETRY AND FASTENER ORIENTATION

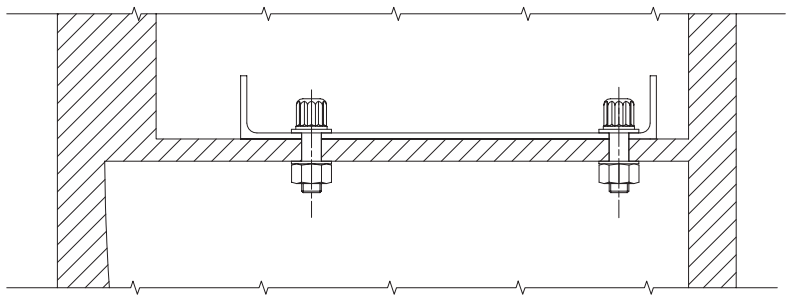

SECTION G-G

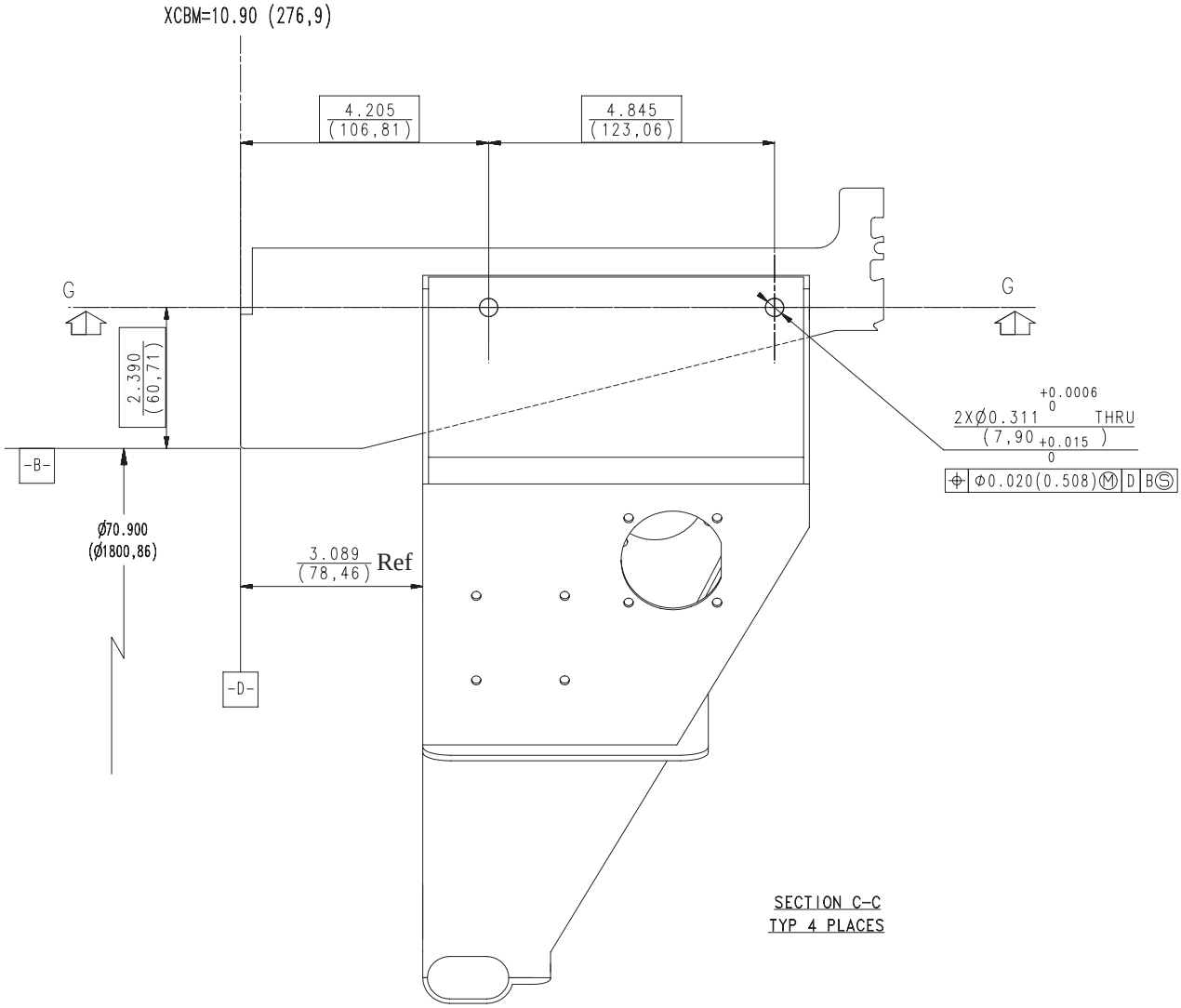

Note: 1) Surface finish anodization can be locally removed for establishing electrical bond at assembly. The removal of the surface finish shall be in accordance with International partners or Boeing approved standard PMP processes. Touch−up finish using chemical conversion coating on any remaining bare aluminium is required.

FIGURE 3.3.13−4 PCBM TO CUPOLA SECONDARY STRUCTURE INTERFACES, BRACKET GEOMETRY AND FASTENER ORIENTATION

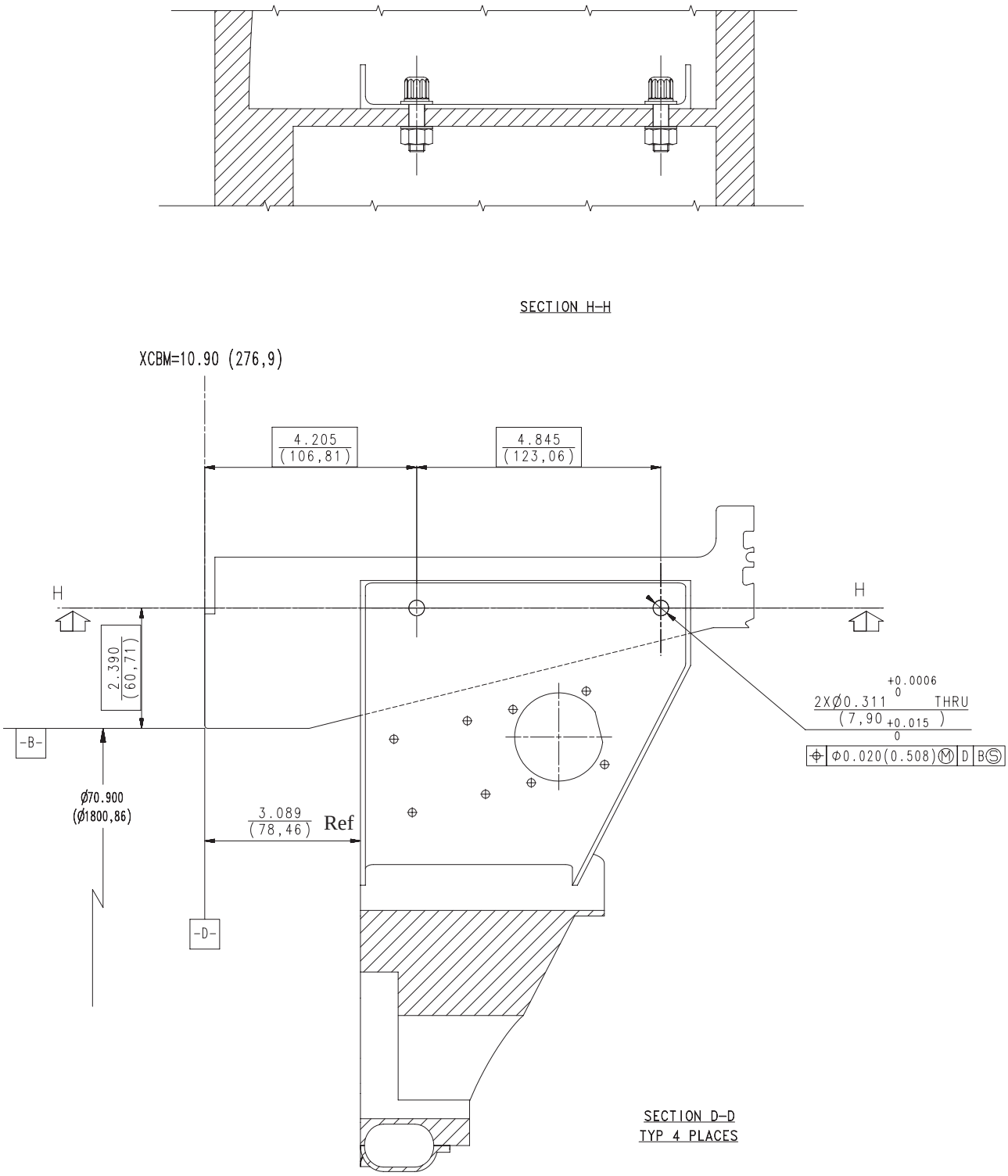

Note: 1) Surface finish anodization can be locally removed for establishing electrical bond at assembly. The removal of the surface finish shall be in accordance with International partners or Boeing approved standard PMP processes. Touch−up finish using chemical conversion coating on any remaining bare aluminium is required.

FIGURE 3.3.13−5 PCBM TO CUPOLA SECONDARY STRUCTURE INTERFACES, BRACKET GEOMETRY AND FASTENER ORIENTATION

3.4 ENVIRONMENTAL INTERFACES

3.4.1 ACBM ENVIRONMENTAL INTERFACES

The ACBM is designed to the environments shown in paragraphs 3A.2.1.7 through 3A.2.1.10 of SSP 41004, Part 1.

3.4.2 PCBM ENVIRONMENTAL INTERFACES

The PCBM is designed to the environments shown in paragraphs 3B.2.1.4 through 3B.2.1.7 of SSP 41004, Part 1.

3.5 SYSTEM INTERFACES (ACTIVE COMMON BERTHING MECHANISM ONLY)

3.5.1 GENERAL

The CBM−to−Module system interfaces consist of the CBM electrical, EVA, and software interface descriptions.

3.5.2 CONNECTORS

Connectors for the Module−to−CBM EPS interface are defined in paragraph 3.3.4.1.

3.5.2.1 POWER DISTRIBUTION

Distribution (cabling schematic) of the power from the PE bulkhead to the ACBM motor controller assemblies is shown in Figure 3.5.2.1−1, ACBM Power Distribution.

3.5.2.1.1 DELETED

3.5.2.1.2 POWER QUALITY

The power quality of the ACBM is as shown in paragraph 3A.2.1.4.1.1 of SSP 41004, Part 1. Power quality of the PE is as shown in paragraph 3A.2.2.4.1.1 of SSP 41004, Part 1.

3.5.2.2 DELETED

3.5.2.3 ELECTRICAL BONDING

Electrical bonding between the CBM and the PE is accomplished utilizing a multi−bolted mating surface bond. Electrical bonding between the CBM−to−CBM interface is described in the Element−to−Element ICDs referenced in Figure 3.3.6−1.

3.5.2.4 CABLE CHARACTERISTICS

Electrical power, control, and Data Handling Cables are designed in accordance with the EMC Classification shown in Tables 3.3.4.1−1, 3.3.4.1−2, 3.3.4.2−1, and 3.3.4.2−2.

3.5.3 MODULE BULKHEAD UTILITY PENETRATION

The C&DH utility penetration on the bulkhead of the modules will be as defined in the respective ICD: SSP 42000, Space Station Manned Base to Japanese Experiment Module Interface Control Document.

3.5.3.1 CONNECTORS

Connectors for the Module−to−CBM C&DH interface are defined in paragraph 3.3.4.2.

3.5.4 EXTRAVEHICULAR ACTIVITY SYSTEM

Location of EVA System handrails and aids for the APM are defined in SSP 42001, SSMB to APM ICD, section 3.5.6.

Location of EVA System handrails and aids for the JEM are defined in SSP 42000, SSMB to JEM ICD, section 3.6.2.2.4.

3.6 SOFTWARE INTERFACES (NASA ONLY)

The C&DH interfaces are defined in SSP 41175 Book 2, Station Management and Control to ISS Software Interface Control Document, SSP 41178 Book 27 for U.S. Elements and Node 2 and SSP 41151 Appendix D, for the JEM, and SSP 50144, Prime Contractor Software Interface Control Document, Part 1, Primary Node Control Software to International Space Station Book 4, Common Berthing Mechanism Interface. (Node 1)

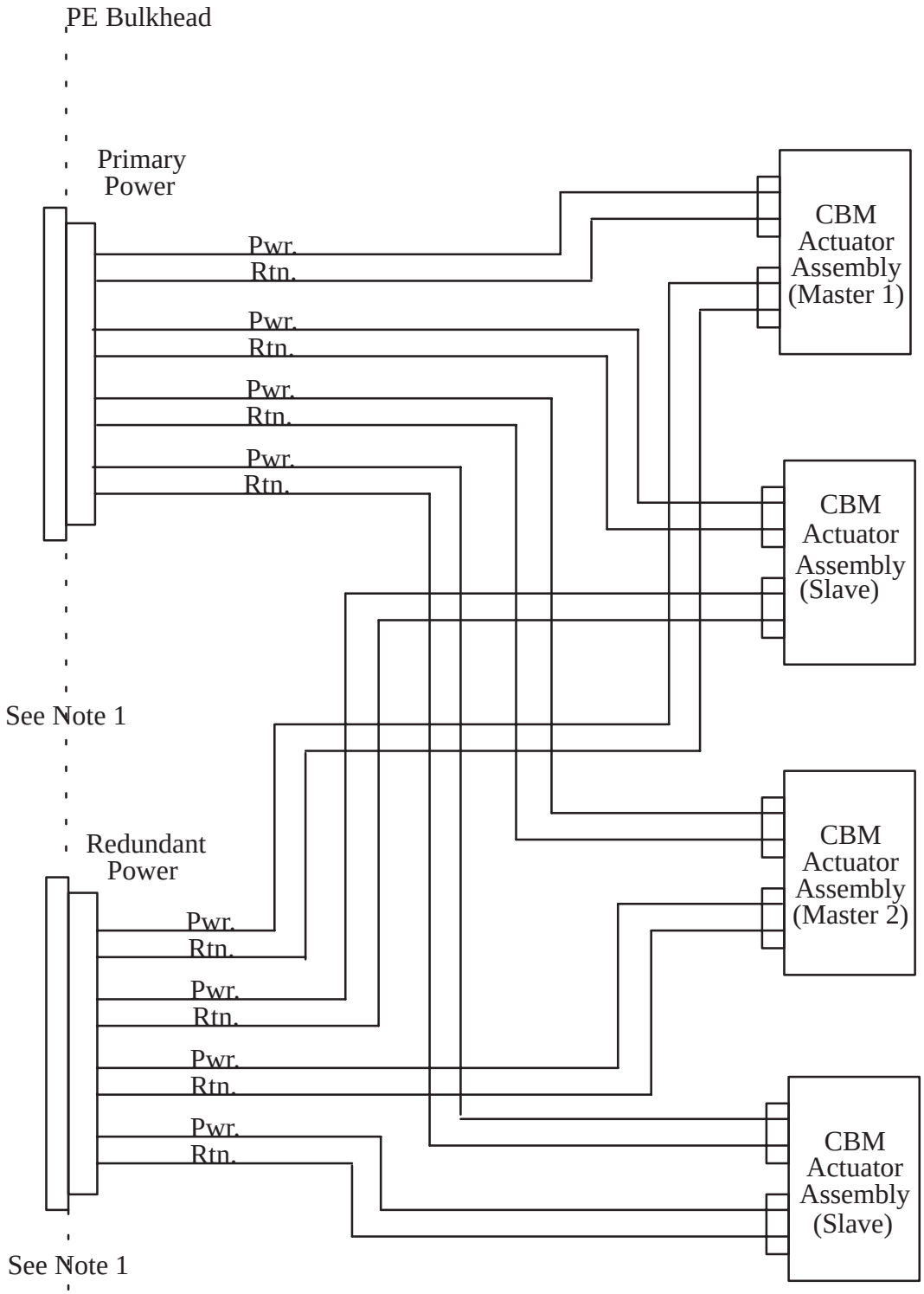

Note 1: Tables 3.3.4.1−1 & 3.3.4.1−2 contain the connector details.

FIGURE 3.5.2.1−1 ACBM POWER DISTRIBUTION

APPENDIX A ABBREVIATIONS AND ACRONYMS

A.1 ABBREVIATIONS AND ACRONYMS

ACBM	Active Common Berthing Mechanism
APM	Attached Pressurized Module
ASI	Agenzia Spaziale Italiana
ASTM	American Society for Testing and Materials
AWG	American Wire Gauge
BTU	British Thermal Unit
C&DH	Command and Data Handler
CAM	Centrifuge Accomodation Module
CATIA	Computer Aided Three−dimensional Interactive Application
CB	Controller Bus
CBCS	Centerline Berthing Camera Sysytem
CBM	Common Berthing Mechanism
CCW	Counter Clockwise
CL	Centerline
DIA	Diameter
ELM	Experiment Logistics Module
EMC	Electromagnetic Compatibility
EPS	Electrical Power System
ESA	European Space Agency
g	Gravity
HTV	H−II Transfer Vehicle
ICD	Interface Control Document
ICWG	Interface Control Working Group
ID	Inner Diameter
I/F	Interface
IMV	Intermodule Ventilation
IP	International Partner
IRD	Interface Requirements Document
ISS	International Space Station

IVA	Intra Vehicular Activity
JAXA	Japanese Aerospace Exploration Agency
JEM	Japanese Experiment Module
Max	Maximum
ms	millisecond
M/D	Meteoroid Debris
Min	Minimum
MLI	Multi−Layer Insulation
mm	Millimeter
M/OD	Meteoroid/Orbital Debris
MPLM	Mini Pressurized Logistics Module
N/A	Not Applicable
NASA	National Aeronautics and Space Administration
OD	Outer Diameter
ODMS	Operations Data Management System
PCBM	Passive Common Berthing Mechanism
PE	Pressurized Elements
PG	Product Group
PIRN	Preliminary Interface Revision Notice
PL	Places
PMA	Pressurized Mating Adapter
PMP	Parts, Materials, and Packaging
PWR	Power
R	Radius
Ref	Reference
RF	Radio Frequency
RPCM	Remote Power Controller Module
RTN	Return
SI	International System of Units
SIG	Signal
SPG	Single Point Ground
SSCB	Space Station Control Board

SSMB	Space Station Manned Base
TBD	To be Determined
TSP	Twisted Shielded Pair
USL	United States Laboratory
USOS	United States On−Orbit Segment

APPENDIX B INDEX OF TBDS/TBRS/TBCS

TBD No.	Previous Paragraph/Figure/ Table	Current Paragraph/Figure/Table	Status
1		Figure 3.1.4.2−3	Closed − PIRN NA−2026A
2		Figure 3.1.4.2−3	Closed − PIRN NA−2026A
3		Paragraph 3.2.2	Closed − PIRN NA−2028C
4		Paragraph 3.5.4	Closed − PIRN NA−2035A
5		Paragraph 3.3.3.2	Closed − PIRN NA−2028C
6		Paragraph 3.2.2	Closed by PIRN 41004−ES−0006B
7		Paragraph 3.3.3.2	Closed by PIRN 41004−ES−0006B
8		Table 3.3.2.1.4−1	Closed by PIRNs 41004−NA−2054 and 41004−AS−2002A

APPENDIX C ISSUE LIST FOR SSP 41004

ISSUE NO.	ICD PARA NO.	DESCRIPTION	DECISION	STATUS	PRIORITY
IS−004	1.3	Precedence		Closed NA−2013A	
IS−005	3.3.2.1	CBM to Module Attachment		Closed NA−2020A	
IS−006	3.1.6.1−1	Tolerance		Closed NA−2020A	
IS−007	3.2.2	Structural Mathematical Models		Closed NA−2020A	
IS−009	3.3.2.1.1	Alignment and Indexing		Closed NA−2019	
IS−010	General	General		Closed NA−2015A	
IS−011	3.1.4	Envelope Interfaces		Closed NA−2030G	
IS−013	3.2.1.1 & 3.2.1.3	Active CBM−to−Module Interface Deflection Limitations & Passive CBM−to−Module Interface Deflection Limitations		Closed by PIRN 41004−ES−0006B	
IS−014	3.3.4.3	Motor Controller Mounting		Closed NA−2022	
IS−015	3.5.2.3	Electrical Bonding		Closed NA−2012B	
IS−016	3.5.2.1	Power Distribution		Closed NA−2012B	
IS−017	3.3.4.1	Active CBM Unique EPS Bulkhead Connectors		Closed NA−2012B	
IS−018	3.3.4.1	Active CBM Unique EPS Bulkhead Connectors		Closed NA−2012B	
IS−31896	General	General		Closed NA−2012B	
IS−32196	3.2.1	General		Closed NA−2023	
IS−CS−01	3.1.4	Common Berthing Mechanism to Pressurized Elements ICD		Closed NA−2025	
IS−JD−01	3.2.1	Modified CBM Installation Cleanliness Level		Closed NA−2024	

ISSUE NO: IS−011 DELETED

ISSUE NO: IS−013 DELETED