REVISIONS				
ZONE	SYM	DESCRIPTION	DATE	APPROVAL
	-	-	-	

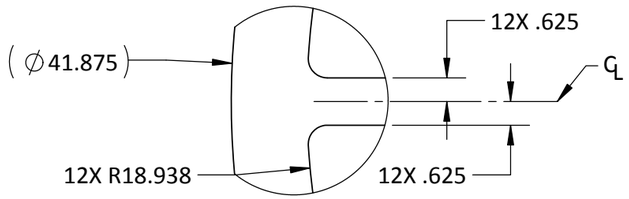

DETAIL D
SCALE 1 : 4

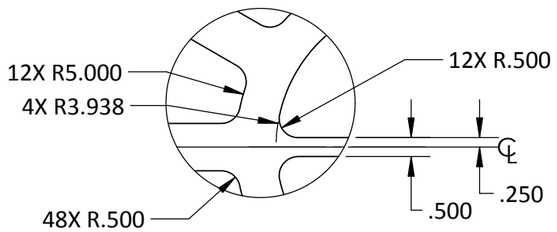

DETAIL C
SCALE 1 : 4

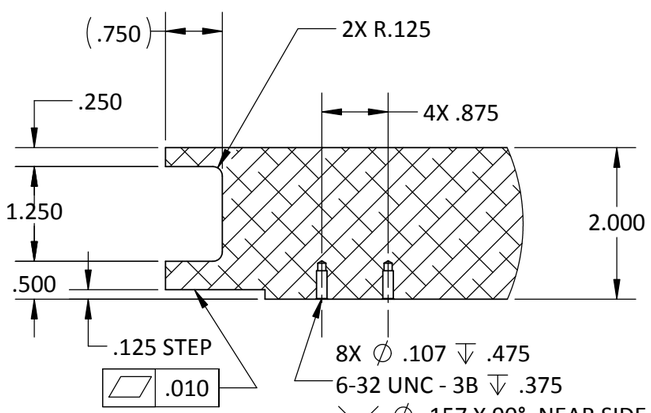

DETAIL E
SCALE 1 : 2

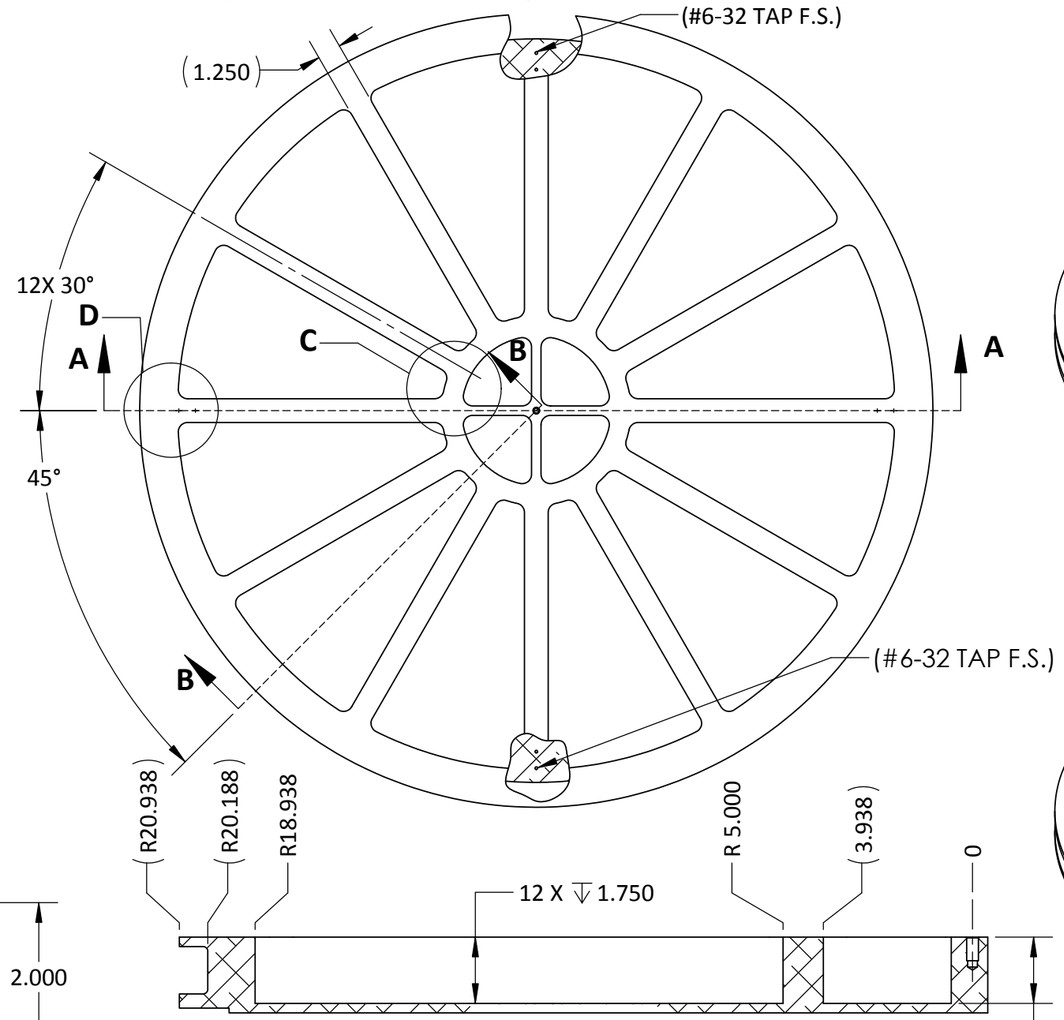

SECTION B-B
SCALE 1 : 4
ROTATED CW 45 °

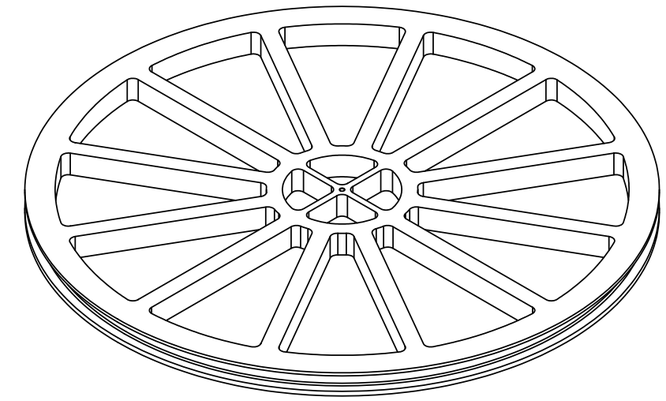

FRONT
ISOMETRIC VIEW

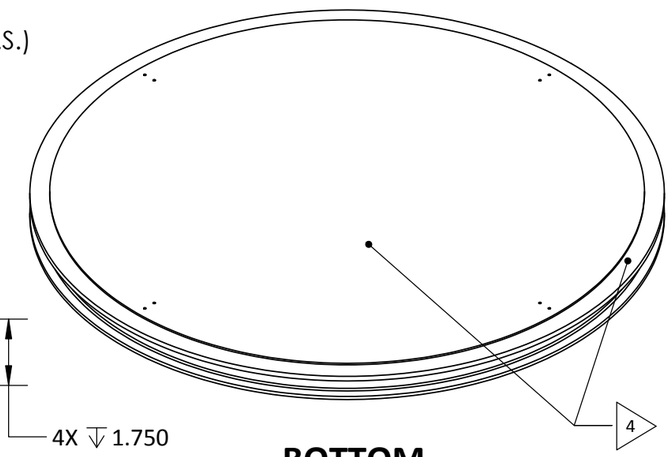

BOTTOM
ISOMETRIC VIEW

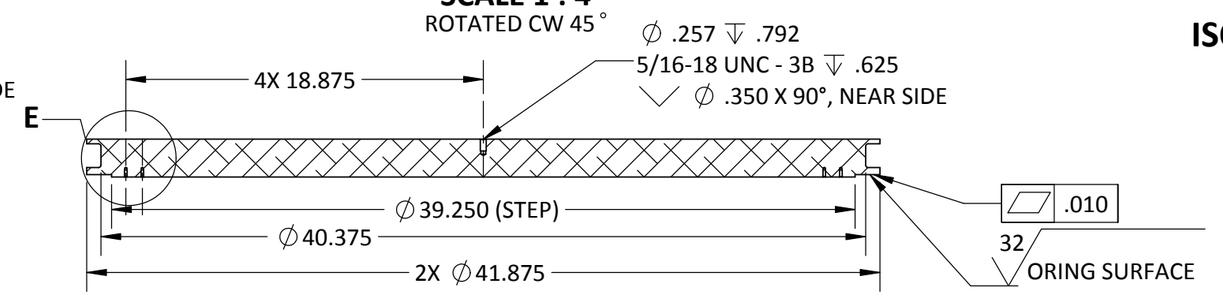

SECTION A-A

NOTES:

1. MATERIAL: 6061-T6 ALUMINUM
2. REMOVE BURRS AND BREAK EDGES
3. FINISH PART 125 ALL OVER
4. FINISH:MACHINE PART 32 INSIDE SURFACE
   OPTION: FINISH ELECTROPLISH

SEE ENGINEERING RECORDS		TOLERANCE EXCEPT AS NOTED DIMENSIONS ARE IN INCHES DECIMAL .XX = ±0.020 .XXX = ±0.005 ANGLE .X = ±1°	ORIGINAL DATE OF DRAWING 8/5/12	CHAMBER LID	GEORGE C. MARSHALL SPACE FLIGHT CENTER NATIONAL AERONAUTICS AND SPACE ADMINISTATION Marshall Space Flight Center, AL 35812	
		MATERIAL 1	DRAFTSMAN / STRESS			
			ENGINEER BCW / MNFG			
			MATERIALS / QA			
			CHECKER			
		HEAT TREAT	SUBMITTED			
NEXT ASSY	USED ON	FINAL FINISH 3 4	APPROVED	EST WT 105.21 LBS / SCALE 1:8 / CODE 339B2	DWG SIZE B	120603501
APPLICATION					SHEET 1 OF 1	